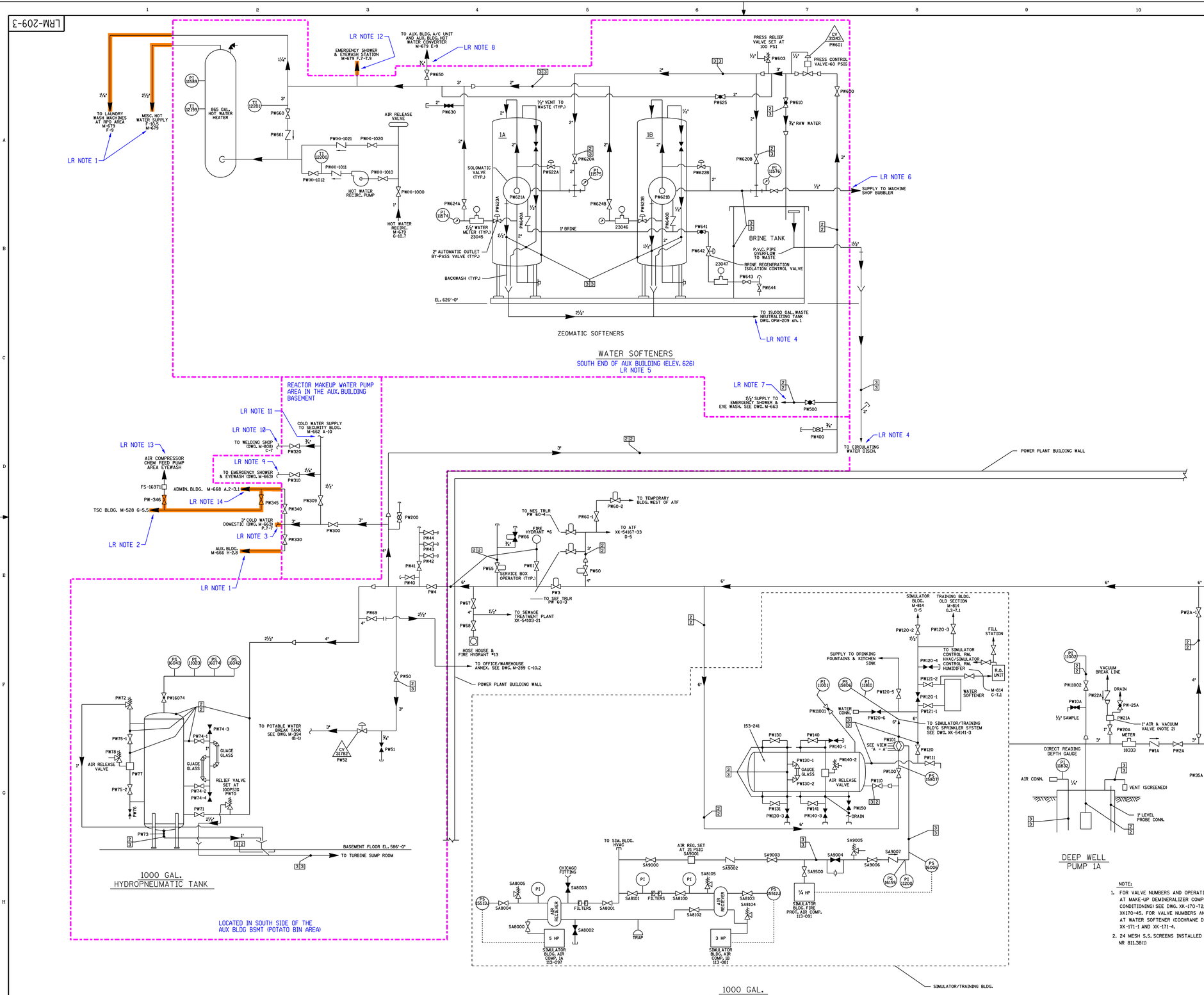

REVISION

LR NOTES:

1. THE PIPING TRAVELS THROUGH OUT THE AUXILIARY BUILDING AND IS IN LR SCOPE. HOWEVER THE SINKS, SHOWERS, TOILETS, WASHING MACHINES, AND BUBBLERS SUPPLIED BY POTABLE WATER ARE NOT LOCATED IN AREAS CONTAINING SAFETY RELATED COMPONENTS AND ARE EXCLUDED FROM SCOPE.
2. THE PIPING THAT RUNS OVER THE TURBINE DRIVEN AUXILIARY FEEDWATER STEAM SUPPLY PIPING LOCATED IN THE NORTH CENTER PART OF THE TURBINE BUILDING BASEMENT IS IN LR SCOPE.
3. THE PIPING IS IN LR SCOPE AND INCLUDES THE LINE THAT PENETRATES THE CONTROL ROOM PRESSURE BOUNDARY.
4. DRAIN PIPING TRAVELS FROM THE SOUTH END OF THE UNCONTROLLED AREA OF THE AUXILIARY BUILDING (ELEV. 626') TO THE SOUTH EAST CORNER OF THE AUXILIARY BUILDING (ELEV. 586'). NO SAFETY RELATED COMPONENTS ARE LOCATED IN THESE AREAS.
5. WATER SOFTENERS ARE LOCATED ON THE SOUTH END OF THE UNCONTROLLED AREA OF THE AUXILIARY BUILDING (ELEV. 626'). NO SAFETY RELATED COMPONENTS ARE LOCATED IN THIS AREA.
6. LINE RUNS FROM WATER SOFTENER AREA TO THE MACHINE SHOP ONE FLOOR BELOW (ELEV. 606'). THERE ARE NO SAFETY RELATED COMPONENTS LOCATED IN THESE AREAS.
7. EMERGENCY SHOWER AND EYEWASH LOCATED 20' WEST OF THE WATER SOFTENERS. THERE ARE NO SAFETY RELATED COMPONENTS LOCATED IN THIS AREA.
8. LOCATED ONE FLOOR ABOVE THE WATER SOFTENERS. NO SAFETY RELATED COMPONENTS ARE LOCATED IN THIS AREA.
9. LOCATED IN THE AUXILIARY BUILDING BASEMENT NEXT TO THE WASTE NEUTRALIZATION TANK. THERE ARE NO SAFETY RELATED COMPONENTS LOCATED IN THIS AREA.
10. LOCATED SOUTH OF MACHINE SHOP (ELEV. 606'). THERE ARE NO SAFETY RELATED COMPONENTS LOCATED IN THIS AREA.
11. PIPING LEAVES AUXILIARY BUILDING NEAR WASTE NEUTRAULIZATION TANK AND TRAVELS BELOW GROUND TO THE SECURITY BUILDING. THERE ARE NO SAFETY RELATED COMPONENTS LOCATED IN THESE AREAS.
12. THE SHOWER AND EYEWASH STATIONS OUTSIDE THE BATTERY ROOMS AND THE ASSOCIATED PIPING ARE IN LR SCOPE.
13. THE EYEWASH AND THE ASSOCIATED PIPING LOCATED ON THE NORTH EAST SIDE OF THE TURBINE BUILDING BASEMENT ARE EXCLUDED FROM SCOPE. THE MAIN CONDENSER AND OTHER COMPONENTS PROVIDE SEPARATION FROM SAFETY RELATED COMPONENTS.
14. THE PIPING AND VALVES LOCATED IN THE ADMIN BUILDING ARE EXCLUDED FROM SCOPE.

NOTE:

1. FOR VALVE NUMBERS AND OPERATING POSITIONS AT MAKE-UP DEMINERALIZER COMPONENTS (L.* A WATER CONDITIONING) SEE DWG. XK-170-72, & XK-170-33 THRU XK170-45. FOR VALVE NUMBERS AND OPERATING POSITIONS AT WATER SOFTENER (COCHRANE DIV. CRANE CO.) SEE DWGS. XK-171-1 AND XK-171-4.
2. 24 MESH S.S. SCREENS INSTALLED PER WI ADMIN CODE NR 811.38(1)

LICENSE RENEWAL DRAWING LEGEND

26/PW POTABLE WATER

IN SCOPE FOR LR PER 10CFR 54.4 (a) (2)

IN SCOPE FOR LR PER 10CFR 54.4 (a) (1) 10CFR 54.4 (a) (3)

DOMINION ENERGY KEWAUNEE, INC.
KEWAUNEE POWER STATION

LICENSE RENEWAL DRAWING
POTABLE WATER SYSTEMS

CADD	APPROVED	DRAWN JSW 02/02/06	DWG. No. LRM-209-3	REV. 0
	REVIEWED	SCALE		

REFERENCED PER MASTER DRAWING OPERM-209-3 REV 0

REV "0" PER LAST UPDATE

22-JA-2008 18:48 LRM-209-3.LRM