HSI Technology Evolution and Effects on Operators

August 26, 2008

Overview

- HSI technology evolution in new control rooms will change some operator tasks
- This presentation highlights a few key areas for the US-APWR

Information & Controls Accessibility

- **All information and controls are easily accessible to each operator**
  - ✓ Video Display Units with hundreds of display pages
    - Menu selectable
  - ✓ Multi-division VDUs
    - Control all safety divisions and non-safety from same VDU
- **Very different than the geographic distribution of instrumentation and controls on conventional panels**
  - ✓ One RO can monitor and control all plant functions
  - ✓ With two ROs, the division of responsibility between ROs can be function based rather than system based
    - For example, one RO can be responsible for all systems (safety and non-safety) for controlling the same function (eg. RCS inventory).

Operational VDU – Screen Menu

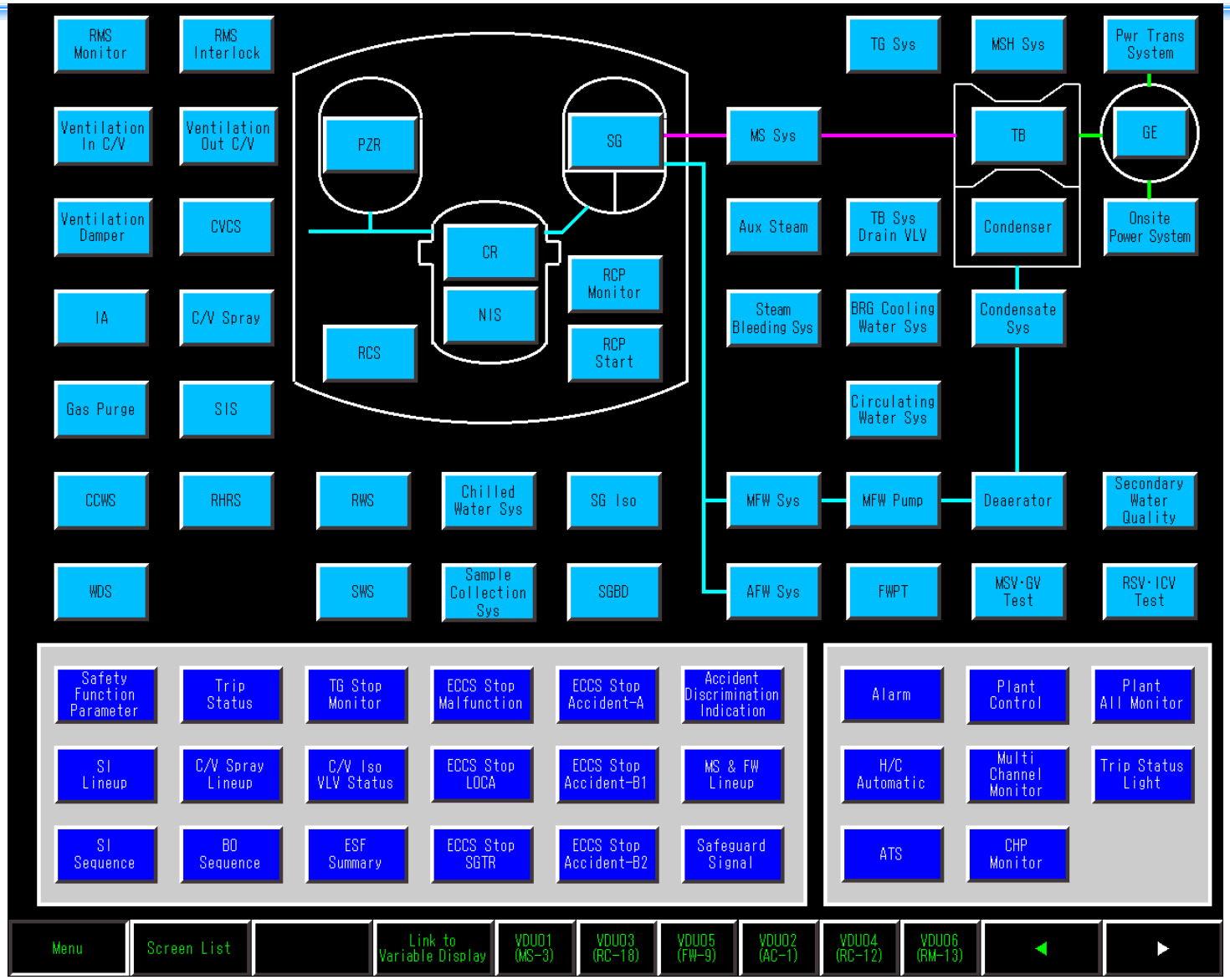

System display request area

Emer display request area

Operational VDU - Monitoring

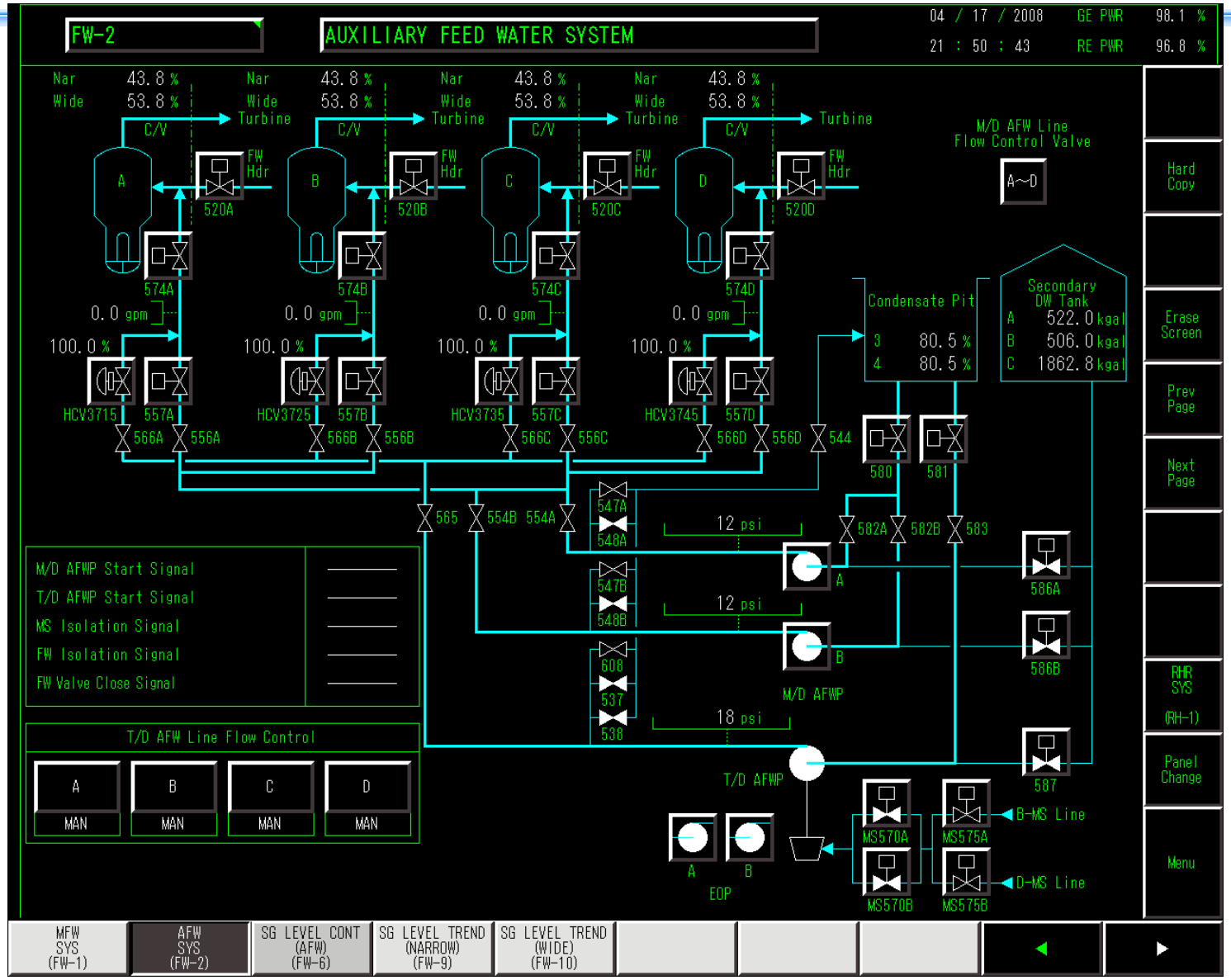

Operational VDU - Control

FW-3

SG LEVEL CONTROL (MAIN FEED WATER VALVE)

04 / 19 / 2008 GE PWR 100.0 %
05 : 41 : 02 RE PWR 98.5 %

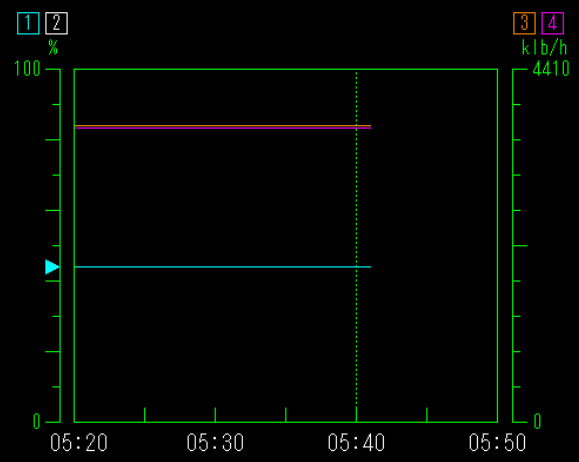

A-SG L Hi Main FW V Close (C-14A ON)	B-SG L Hi Main FW V Close (C-14B ON)	C-SG L Hi Main FW V Close (C-14C ON)	D-SG L Hi Main FW V Close (C-14D ON)

	A	B	C	D
1 SG Level (Nar) (Mid) (%)	44.0	44.0	44.0	44.0
2 SG Reference Level (%)	44.0	44.0	44.0	44.0
3 FW Flow (Mid) (klb/h)	3699	3699	3698	3699
4 MS Flow (Mid) (klb/h)	3679	3679	3678	3679

A-FW Flow	B-FW Flow	C-FW Flow	D-FW Flow
FK-468B	FK-478B	FK-488B	FK-498B
AUTO MAN·MV	AUTO MAN·MV	AUTO MAN·MV	AUTO MAN·MV
MV 72.8%	MV 72.8%	MV 72.8%	MV 72.8%
LV 72.8%	LV 72.8%	LV 72.8%	LV 72.8%
FAST SLOW	FAST SLOW	FAST SLOW	FAST SLOW
MV LV % 100 50 0	MV LV % 100 50 0	MV LV % 100 50 0	MV LV % 100 50 0
1 2 3 4 5 6 M	1 2 3 4 5 6 M	1 2 3 4 5 6 M	1 2 3 4 5 6 M

SG LEVEL CONT C-LOOP (FW-8.3)
SG LEVEL CONT D-LOOP (FW-8.4)
SG LEVEL TREND NAR (FW-9)
SG LEVEL TREND WIDE (FW-10)
Panel Change
Menu

MFW SYS (FW-1) | SG LEVEL CONT (MFW VLV) (FW-3) | SG LEVEL CONT (POS CHANGE) (FW-4) | SG LEVEL CONT (MAKEUP) (FW-5) | SG LEVEL CONT (AFW) (FW-6) | SG LEVEL CONT (BYPASS VLV) (FW-7) | SG LEVEL CONT (A-LOOP) (FW-8.1) | SG LEVEL CONT (B-LOOP) (FW-8.2) | ◀ ▶

Operational VDU - Multi-Division

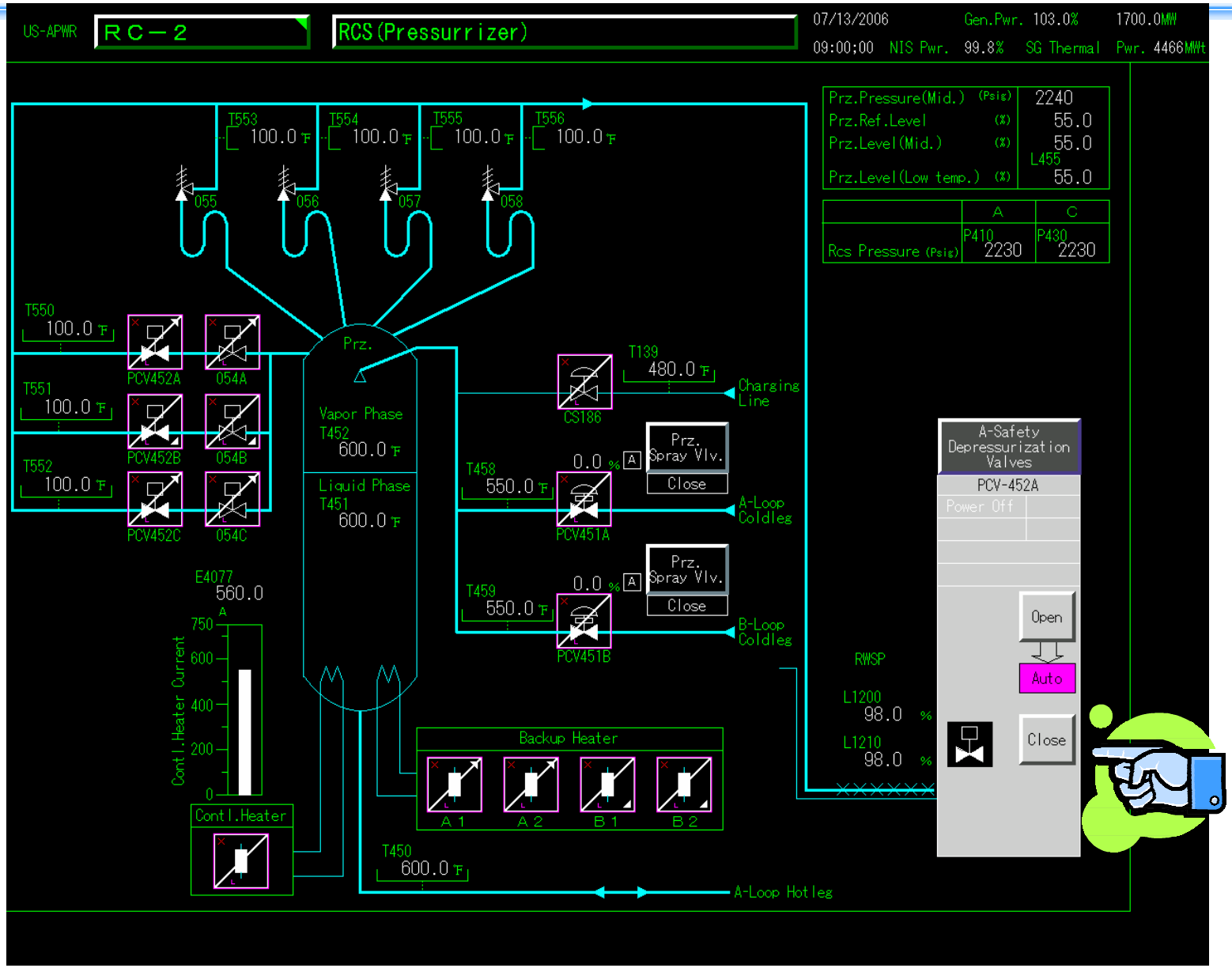

Automated Cross Channel Checks

- **Computers continuously perform cross channel checks**
  - ✓ Operators don't need to do this anymore
- **Monitoring and control displays show one parameter, not four**
  - ✓ Four are available on diagnostic level displays
- **Control systems use all channels**
  - ✓ No effect from single channel failures
- **Operators respond to channel deviation alarms**
  - ✓ Check system level effect (usually none, Partial Trip)
  - ✓ Confirm deviation
  - ✓ Check Tech Spec LCOs
  - ✓ Longer term action
    - Maintenance work order

Automated Actuation Checks

- **Computers check correct actuation of all ESF system components**
  - Pump start, valve line-up
  - ✓ Operators don't need to do this anymore
- **Operators respond to "Not OK" alarms**
  - ✓ Confirm alternate train is "OK", including performance
  - ✓ Longer term action
    - Confirm "Not OK" status
    - Restore to "OK" status
    - Maintenance work order

Large Display Panel

Partial Trip Monitor

OK Monitor

Air Lock | Prot Dev | Line Up | Process Mo | VS | SGBD | SFP | PZR
Cavity | Pri Cabinet | Safety Comp | Area Mo | Chilled Water | WDS | CSS | CVCS
RCS Level | | | NIS | EP | Sump | RCC | PMWS
Flange | | | | SWS | ASS | SS | RHRS

(cpm) R-40, R-41, R-43, R-55
(cpm) R-65H, R-66H, R-67H, R-68H
(mSv/h) R-91B, R-92B

Partial: RT | SI | TT | CP | Block&Perm

Safety Comp Area P (psi) -0.011
Annulus P (psi) -0.022
LTDN Flow (gpm) 117.7

EOP
RT, TT, GT
SI, BO, CP
T, P, T+UV, S+UV, V, M
FW Iso, MS Iso, AFWP Act
Auto Start Block, SG Hi-Hi Level TT, Positioner Change, SI RCP Trip, Recirc Auto Chng, MFW Vlv Close

BAT Press
BAT Temp
BAT Level (%) A 90.0 B 90.0

BAP A B

CCWST Level (%) 1 51.1 2 51.1

CCWP A B C D

IAS A B

Hdr Press (psi) A 99.6 B 99.6

SWP A B C

VCT Press
VCT Temp Hi
VCT Level Lo(Auto)
VCT Level (%) 1 49.2 2 49.2

CCW Press Lo
CCW Flow
Cooler Out T Hi

RWSP Temp Lo
RWSP Level (%) 98.0

SWS Flow Caution
Hdr Press (psi) A 94.7 B 94.7

Spray Additive Tank Level (%) 90.0

CHP A B C

RCP Seal
Chg Flow (gpm) 91.5

RHRP A B
Flow (gpm) A 0 B 0

SIP A B
Flow (gpm) A 0 B 0

CPP A B
Flow (gpm) A 0 B 0

Automated BISI

Bypassed or Inoperable Status Indication

- **Computers monitor components for inoperable or misalignment conditions**
  - ✓ While in standby mode
- **Computers determine and display effects at train level**
  - ✓ Operators don't need to do this anymore
- **Operators respond to "Not Ok" alarms**
  - ✓ Confirm "Not Ok"
  - ✓ Check Tech Spec LCOs
  - ✓ Longer term action
    - Restore to "OK" status
    - Maintenance order

Alarm Management

- **Alarm avalanche conditions are common in current alarm systems**
  - ✓ EOPs and training do not credit the alarm system
- **Alarm avalanche conditions are significantly reduced by**
  - ✓ Signal validation
    - – based on automated cross channel checks
    - • One <u>process</u> alarm, not one for each division
  - ✓ Cause-consequence dependency logic
    - • Plant mode
    - • Equipment mode
  - ✓ Prioritization logic
    - • Highlights degrading conditions
- **Allows the alarm system to be credited**

Dynamic Alarm Priority Rules (1/3)

Higher prioritization rule

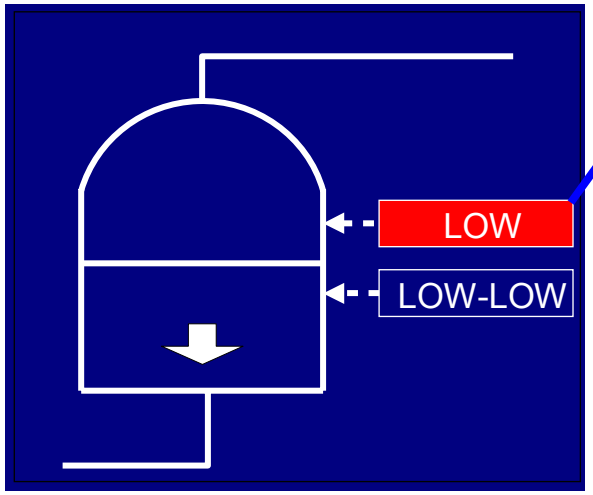

Low alarm is displayed as Priority 1 (alarm information) until the tank level reduces to the Low-Low alarm setpoint.

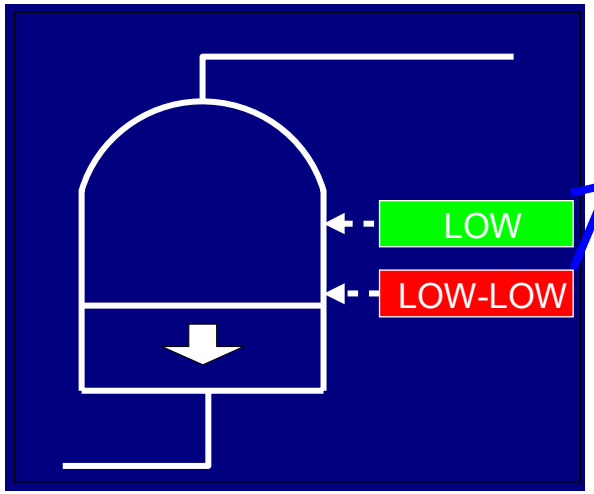

When the level reaches the Low-Low alarm setpoint, the Low-Low alarm is displayed as Priority 1 and the Low alarm is changed to Priority 3 (status information).

Dynamic Alarm Priority Rules (2/3)

Cause-consequence equipment rule

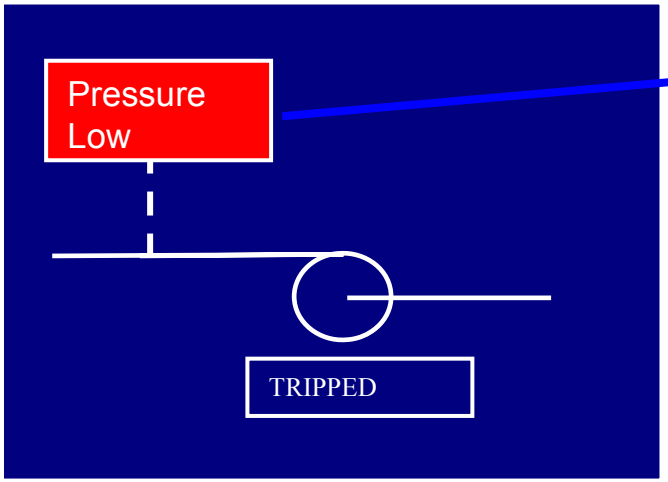

A low discharge pressure alarm is displayed at priority 1 if there is no cause for the alarm.

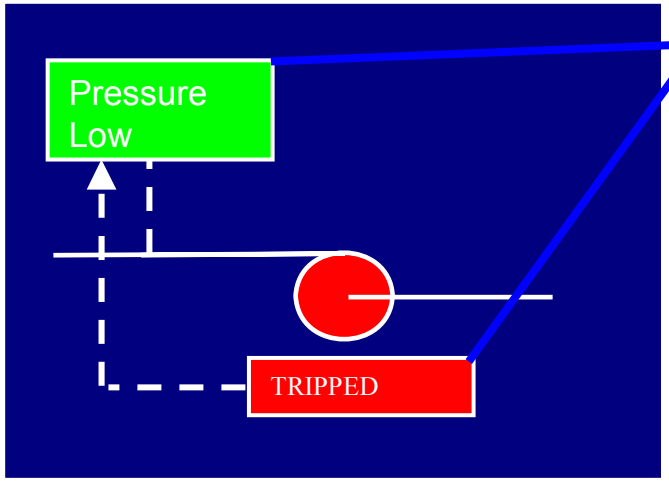

However, the low pressure alarm (“result” alarm) is regarded as Priority 3 when the pump is stopped by the interlock alarm (“cause” alarm) which is displayed as Priority 1.

Dynamic Alarm Priority Rules (3/3)

Cause-consequence mode rule

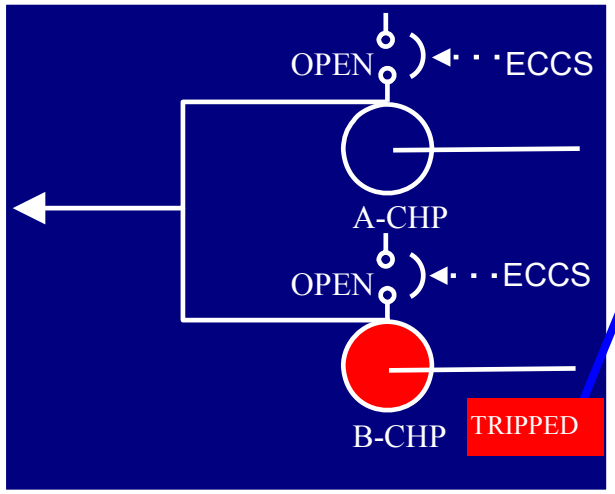

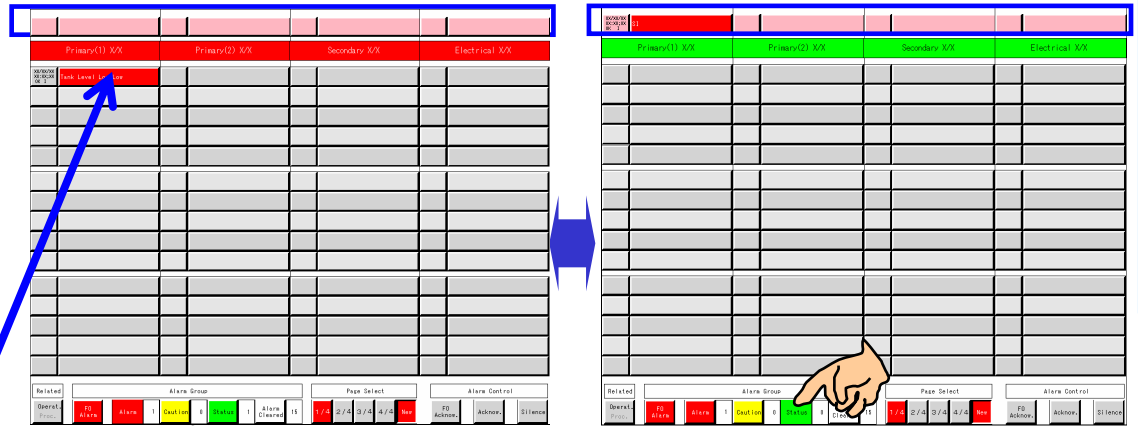

A charging pump trip is displayed at priority 1 if there is no cause for the alarm.

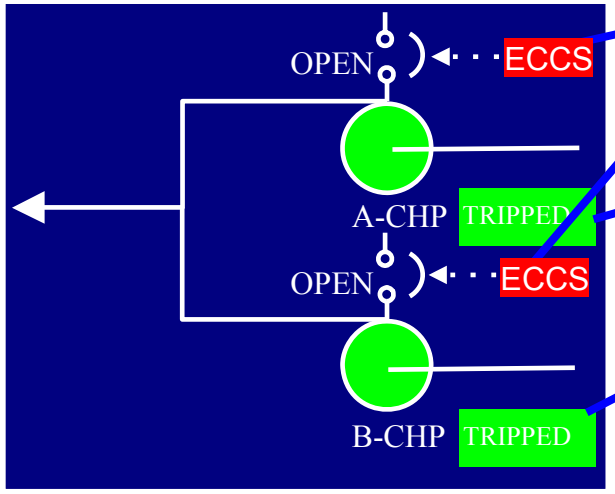

Charging pump trip alarms are regarded as Priority 3 (status information) when an ECCS signal is actuated.

Degraded HSI Conditions

- **Current control rooms**
  - ✓ HSI is an integral part of the plant systems and components (eg. pumps, valves, instruments)
  - ✓ Operators train to cope with plant component failures, not HSI failures
- **New control room**
  - ✓ HSI redundancy to minimize the potential for failures
  - ✓ If an unusual failure occurs, the effect can be much more global (eg. complete VDU freeze)
    - In addition to training operators for plant component/system failures, we must also train them for HSI failures
    - This is further complicated by NRC criteria for consideration of common cause failure
      - Adds even more training for beyond design basis events
  - ✓ Degraded HSI may be the most significant operator training challenge

Degraded HSI Conditions

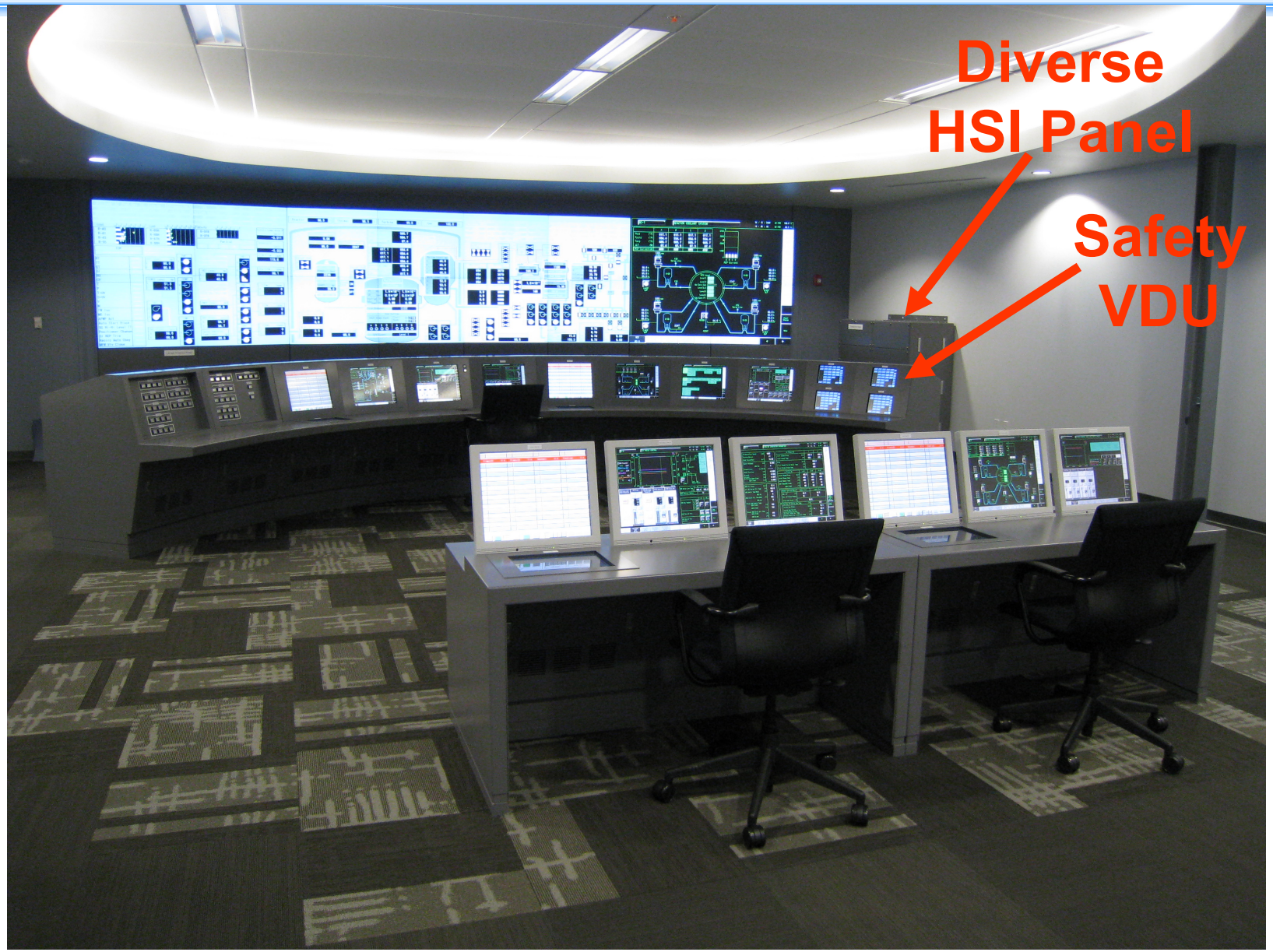

Summary

- HSI technology evolution in new control rooms will reduce routine operator task burden
- Digital technology has proven highly reliable
- Regardless, operators must be well trained for degraded HSI conditions