NRC/NEI LRTF MEETING

Station Blackout Scoping Boundary For License Renewal

July 18, 2008

NEI
NUCLEAR ENERGY INSTITUTE

Meeting Outline and Expectations

- Briefly summarize SBO scoping boundary history
- Provide overview of key industry comments on revised staff position on SBO scoping
- Step through industry comments on proposed LR-ISG-2008-01
- Identify actions to resolve and disposition issues

NEI

Background

- Station Blackout (SBO) scoping boundary addressed in 2001-2002
  - Series of meetings led to ISG-2 issued April 1, 2002

Current Staff Position

"Consistent with the requirements in 10 CFR 54.4(a)(3) and 10 CFR 50.63(a)(1), the plant system portion of the offsite power system should be included within the scope of license renewal."

- Formally incorporated into guidance documents, SRP and GALL, 2005 revision

NEI

Background

- Staff interpretation of ISG guidance changed in 2007 to require inclusion of switchyard circuit breakers; irrespective of plant design and plant licensing basis
- Interpretation is inconsistent with license renewal reviews completed after 2002 issuance of ISG-2
- Industry concerns documented in Position Paper forwarded to NRC August 14, 2007

Background

- Issue discussed in public meeting in December 2007 and January 2008
- Draft LR-ISG-2008-01 Issued for Comment

  Proposed Staff Position

  "Consistent with the requirements in 10 CFR 54.4(a)(3) and 10 CFR 50.63(a)(1), the scope of license renewal should include the offsite recovery path from the transmission system to the Class 1E distribution system. The offsite and onsite power circuits must permit functioning of structures, systems, and components necessary to respond to the event."
- Industry Comments provided May 12, 2008

NEI

Overview of Industry Comments

- Proposed LR-ISG-2008-01 specifies a prescriptive scoping boundary
- Proposed boundary is independent of and goes beyond current licensing basis for plants
  - This is contrary to the requirements of 10 CFR 54.4(a)(3)
  - 10 CFR 54.4 requires licensees to include SSCs that are relied on in safety analyses or plant evaluations to perform a function that demonstrates compliance with the Commission's regulations for station blackout (10 CFR 50.63)

NEI

Overview of Industry Comments

- Proposed boundary extends beyond plant boundary established in response to FERC mandated interface agreements
  - Continued reliability of offsite power system (the grid) addressed by FERC reliability standards

NEI

Overview of Industry Comments

- Proposed ISG ascribes functions to the switchyard breakers that either are not met or can be equally met by components within the plant boundary
- Switchyard breaker "functions" per LR-ISG-2008-01
  - Provide plant power
  - Protect downstream circuits (safety buses)
  - Provide plant operator-controlled isolation and energization
  - Coordinates with other protective devices to minimize probability of loss of offsite power and prevent transients from affecting the onsite distribution system as offsite power is being restored

Overview of Industry Comments

- The scope expansion resulting from the proposed ISG will have an operational impact for many plants with no discernible safety benefit
  - Proposed ISG would result in inclusion of miles of transmission lines and virtually entire substations within the scope of license renewal
- The current guidance states that the "plant portion" of the offsite power system which "typically" includes switchyard circuit breakers should be in scope
  - These are key terms in the guidance that recognize the CLB must be considered and that every plant is not configured the same

NEI

Overview of Industry Comments

- Proposed ISG states that compliance with the SBO rule based on:
  - Site-related characteristics defined in RG 1.155 (Station Blackout)
  - Availability and reliability of offsite power including the protective coordination of relays
- Basis not apparent in regulations, guidance or SBO SERs
  - Site related characteristics are related to independence of offsite power supplies and weather groups
  - RG 1.155 does not address any internal switchyard design or operating configurations, components, or connections – the figures show the switchyards as "black boxes"
  - No discussion of protective coordination of switchyard breakers in RG 1.155, NUMARC 87-00, 10 CFR 50.63 or the NRC SBO SERs

Summary and Recommendations

- SBO Scoping Boundary is a plant specific determination based on plant design and CLB
- Prescriptive scope expansion that includes switchyard circuit breakers will result in significant operational impact with no known safety benefit
- Recommendations
  - Continue with pre-2007 application of existing guidance – Plant portion of offsite power system is in scope
  - The plant portion of the offsite power system should continue to be based on plant design and CLB
  - Withdraw proposed LR-ISG-2008-01

Figures

- Figures 1 – 4
  - Schematics of actual plant offsite power configurations
  - Only major components shown
  - Only one of two offsite power sources shown
  - Red lines indicate expanded scope per LR-ISG-2008-01
- RG 1.155, Figure 1
  - Schematic showing independent transmission line example

NEI

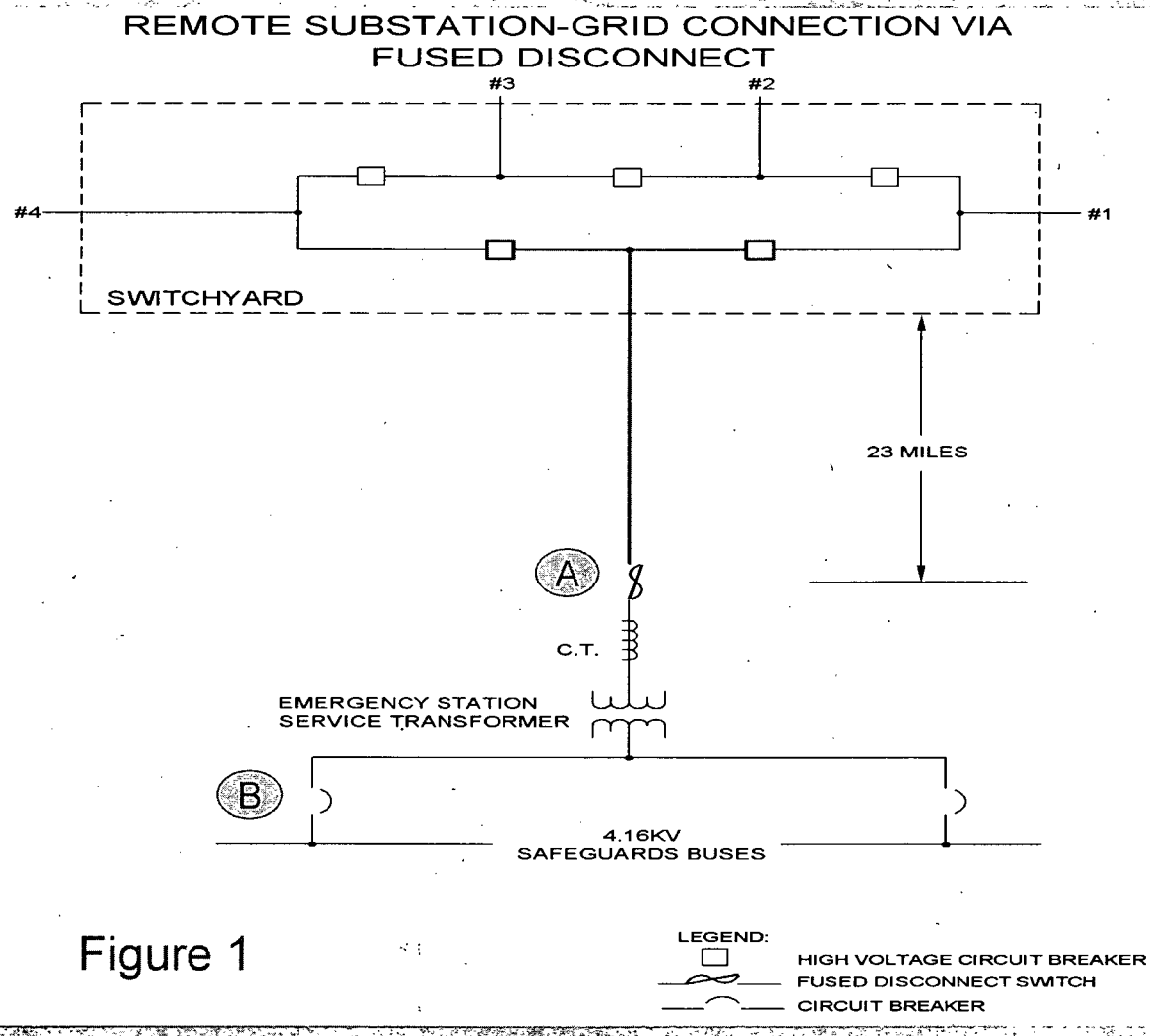

Figure 1

- **Expanded scope - 23 miles of transmission line and portions of remote switchyard**
- **Offsite source via independent transmission line - No local switchyard**

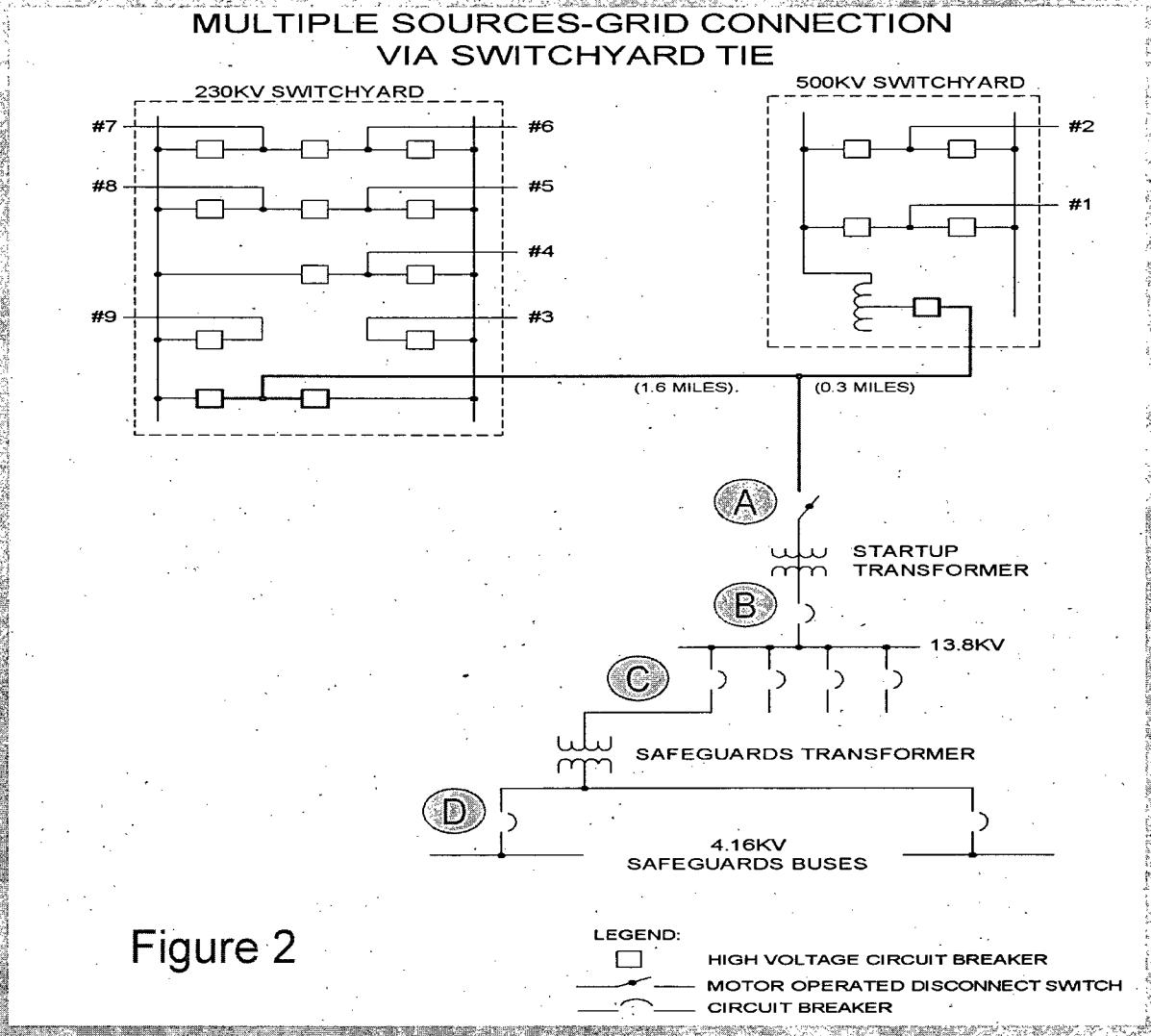

Figure 2

- **Expanded scope - Almost 2 miles of transmission line and portions of two switchyards**
- **Second offsite source via third switchyard**

NEI

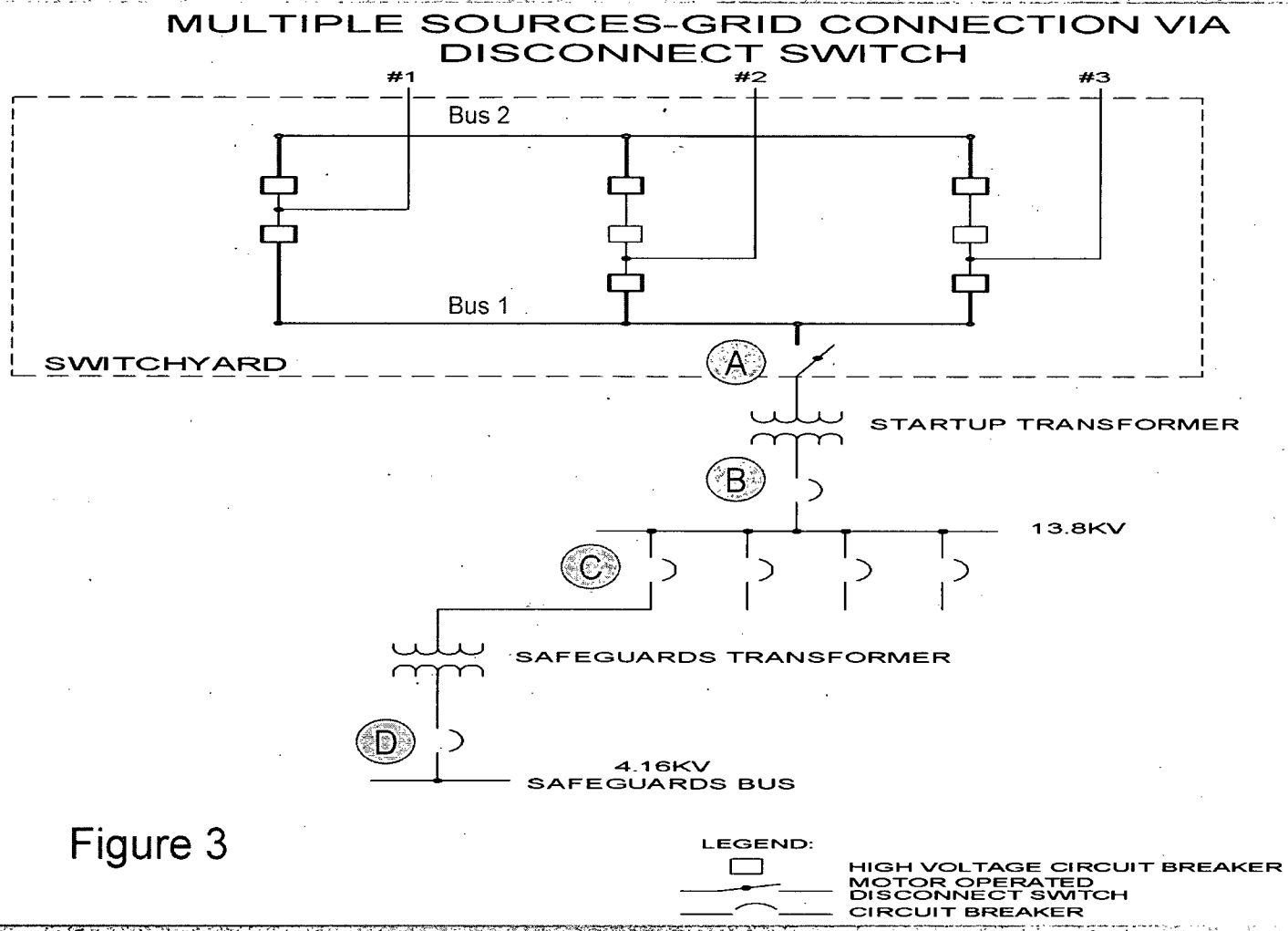

Figure 3

- **Expanded scope includes most of the switchyard**
- **Both offsite power supplies from one switchyard – second source via Bus 2**

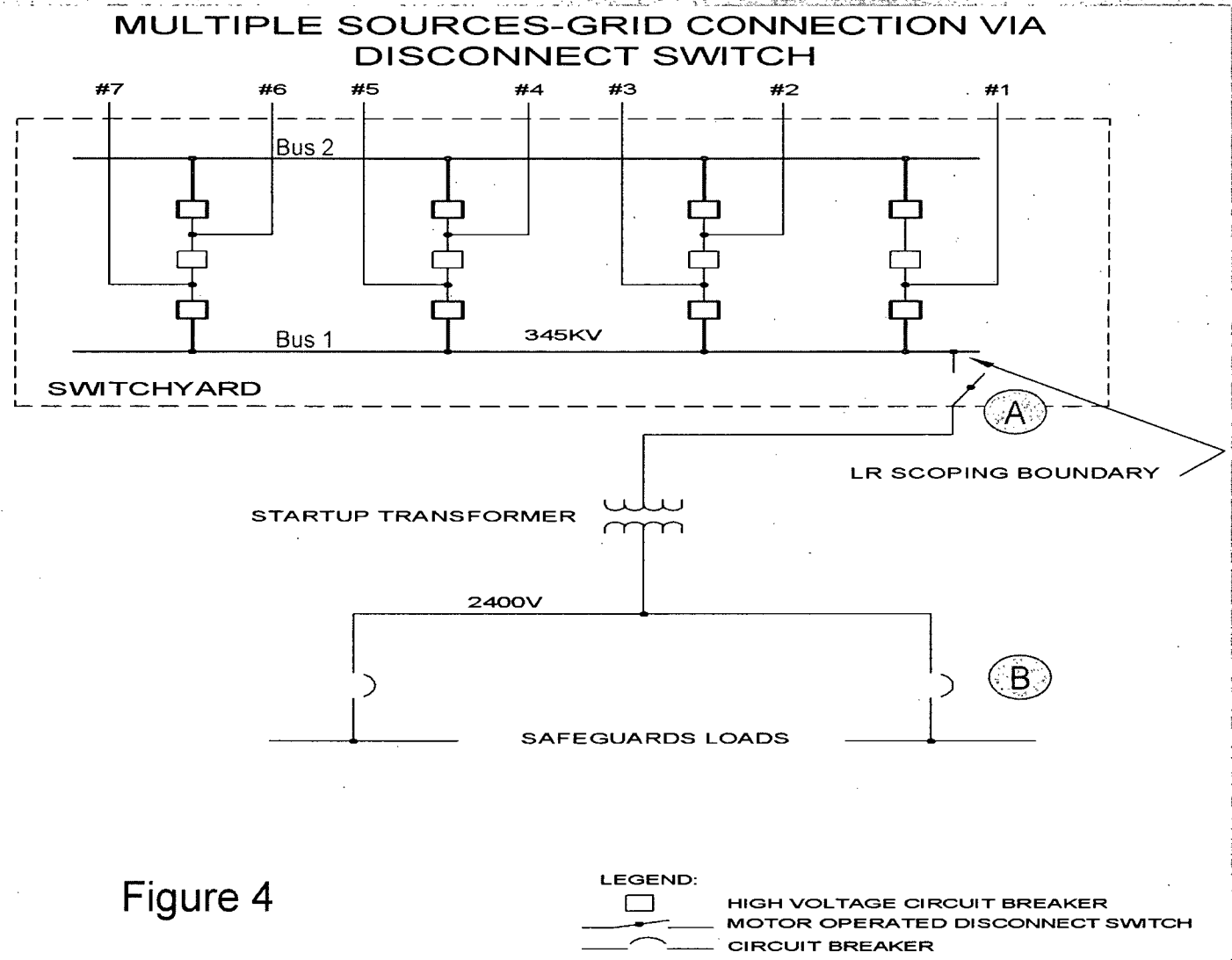

Figure 4

- **Expanded scope includes most of the switchyard**
- **Both offsite power supplies from one switchyard – Second source via Bus 2**

NEI

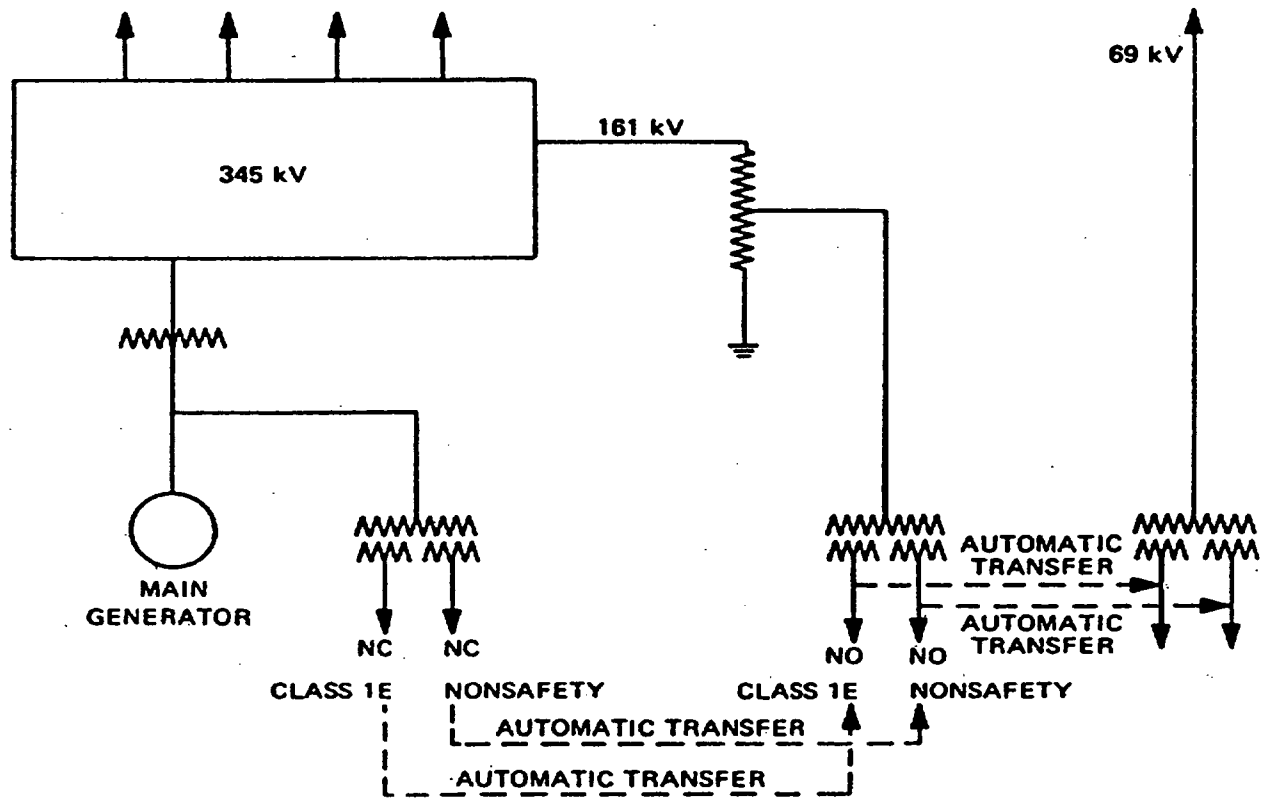

Figure 1. Schematic Diagram of Electrically Independent Transmission Line

RG 1.155, Figure 1

- **Independence of offsite power supplies**
- **No circuit breakers shown or breaker functions mentioned**

NEI