MITSUBISHI HEAVY INDUSTRIES, LTD.
16-5, KONAN 2-CHOME, MINATO-KU
TOKYO, JAPAN

August 22, 2008

Document Control Desk
U.S. Nuclear Regulatory Commission
Washington, DC 20555-0001

Attention: Mr. Jeffrey A. Ciocco,

Docket No. 52-021
MHI Ref: UAP-HF-08150

Subject: MHI's Responses to US-APWR DCD RAI No.35

References: 1) "Request for Additional Information No. 35 Revision 0, SRP Section: 19 - Probabilistic Risk Assessment and Severe Accident Evaluation, Application Section: RG 1.206," dated July 24, 2008.

With this letter, Mitsubishi Heavy Industries, Ltd. ("MHI") transmits to the U.S. Nuclear Regulatory Commission ("NRC") a document entitled "Responses to Request for Additional Information No.35 Revision 0".

Enclosed are the responses to the RAIs that are contained within Reference 1.

As indicated in the enclosed materials, this document contains information that MHI considers proprietary, and therefore should be withheld from public disclosure pursuant to 10 C.F.R. § 2.390 (a)(4) as trade secrets and commercial or financial information which is privileged or confidential. A non-proprietary version of the document is also being submitted with the information identified as proprietary redacted and replaced by the designation "[ ]".

This letter includes responses to the RAIs (Enclosure 2) and the Affidavit of Yoshiki Ogata (Enclosure 1) which identifies the reasons MHI respectfully requests that all information in Enclosure 2 be withheld from public disclosure pursuant to 10 C.F.R. § 2.390 (a)(4).

Please contact Dr. C. Keith Paulson, Senior Technical Manager, Mitsubishi Nuclear Energy Systems, Inc. if the NRC has questions concerning any aspect of the submittals. His contact information is below.

Sincerely,

Y. Ogata

Yoshiki Ogata,
General Manager- APWR Promoting Department
Mitsubishi Heavy Industries, LTD.

D081
NRO

Enclosures:

1. Affidavit of Yoshiki Ogata

2. Responses to Request for Additional Information No.35 Revision 0 (proprietary)

3. Responses to Request for Additional Information No.35 Revision 0 (non-proprietary)

CC: J. A. Ciocco
C. K. Paulson

Contact Information
C. Keith Paulson, Senior Technical Manager
Mitsubishi Nuclear Energy Systems, Inc.
300 Oxford Drive, Suite 301
Monroeville, PA 15146
E-mail: ck_paulson@mnes-us.com
Telephone: (412) 373-6466

ENCLOSURE 1

Docket No. 52-021
MHI Ref: UAP-HF-08150

MITSUBISHI HEAVY INDUSTRIES, LTD.

AFFIDAVIT

I, Yoshiki Ogata, state as follows:

1. I am General Manager, APWR Promoting Department, of Mitsubishi Heavy Industries, LTD ("MHI"), and have been delegated the function of reviewing MHI's US-APWR documentation to determine whether it contains information that should be withheld from public disclosure pursuant to 10 C.F.R. § 2.390 (a)(4) as trade secrets and commercial or financial information which is privileged or confidential.

2. In accordance with my responsibilities, I have reviewed the enclosed document entitled "Responses to Request for Additional Information No.35 Revision 0, August, 2008", and have determined that portions of the document contain proprietary information that should be withheld from public disclosure. Those pages containing proprietary information are identified with the label "Proprietary" on the top of the page and the proprietary information has been bracketed with an open and closed bracket as shown here "[ ]". The first page of the document indicates that all information identified as "Proprietary" should be withheld from public disclosure pursuant to 10 C.F.R. § 2.390 (a)(4).

3. The information identified as proprietary in the enclosed document has in the past been, and will continue to be, held in confidence by MHI and its disclosure outside the company is limited to regulatory bodies, customers and potential customers, and their agents, suppliers, and licensees, and others with a legitimate need for the information, and is always subject to suitable measures to protect it from unauthorized use or disclosure.

4. The basis for holding the referenced information confidential is that it describes the unique design and methodology developed by MHI for performing the design of the US-APWR reactor.

5. The referenced information is being furnished to the Nuclear Regulatory Commission ("NRC") in confidence and solely for the purpose of information to the NRC staff.

6. The referenced information is not available in public sources and could not be gathered readily from other publicly available information. Other than through the provisions in paragraph 3 above, MHI knows of no way the information could be lawfully acquired by organizations or individuals outside of MHI.

7. Public disclosure of the referenced information would assist competitors of MHI in their design of new nuclear power plants without incurring the costs or risks associated with the design of the subject systems. Therefore, disclosure of the information contained in the referenced document would have the following negative impacts on the competitive position of MHI in the U.S. nuclear plant market:

   A. Loss of competitive advantage due to the costs associated with development of

methodology related to the analysis.

B. Loss of competitive advantage of the US-APWR created by benefits of modeling information.

I declare under penalty of perjury that the foregoing affidavit and the matters stated therein are true and correct to the best of my knowledge, information and belief.

Executed on this 22th day of August 2008.

Y. Ogata

Yoshiki Ogata,
General Manager- APWR Promoting Department
Mitsubishi Heavy Industries, LTD.

Enclosure 3

UAP-HF-08150
Docket Number 52-021

Responses to Request for Additional Information No.35 Revision 0

August, 2008
(Non-Proprietary)

RESPONSE TO REQUEST FOR ADDITIONAL INFORMATION

8/22//2008

US-APWR Design Certification

Mitsubishi Heavy Industries

Docket No.52-021

RAI NO.: **NO.35 REVISION 0**

SRP SECTION: **19 – Probabilistic Risk Assessment and Severe Accident Evaluation**

APPLICATION SECTION: **RG 1.206**

DATE OF RAI ISSUE: **7/24/2008**

QUESTION NO. : 19-79

At the introduction of Chapter 3 of the PRA report (page 3-1) it is stated that "The success criteria for event headings are defined in Table 3.2.1.3-1 to Table 3.2.17.3-1." These tables appear to include information that is confusing since there is no explicit association of the top event headings with their associated success criteria and no explanation. Please explain how the success criteria listed in these tables are related to the event tree top events. Examples of confusing information provided in Tables 3.2.1.3-1 to 3.2.17.3-1 are:

- Table 3.2.3.3-1 (SLOCA) shows 2 out of 4 and 3 out of 4 success criteria for "secondary cooling system." If these success criteria are associated with top event EFA (emergency feedwater system), it is not clear why two sets of criteria are used for same top event. In addition, no criteria for turbine bypass, main steam relief or main steam safety valves are listed.

- Note (5) in Table 3.2.3.3-1 (SLOCA) reads: "Alternate CV cooling is ¼ are undecided." Please clarify.

- Table 3.2.2.3-1 (MLOCA) does not include any success criteria for top event SRA "secondary side cooling."

- Table 3.2.2.3-1 (MLOCA) shows 1 out of 4 and 1 out of 3 success criteria for "CS/RHR (heat removal)." If these success criteria are associated with top event CXC, it is not clear why two sets of criteria are used for same top event.

- Table 3.2.4.3-1 (VSLOCA) shows some success criteria in parentheses without any explanation.

ANSWER:

(1) The success criterion for heat removal via SGs is that 2 out of 4 SGs are available, and the success criterion for RCS depressurization by secondary side cooling is that 3 out of 4 SGs are available. The description in Table 3.2.3.3-1 does not clearly distinguish these two different features and makes confused. In order to get rid of this confusion, the success criteria tables in the PRA report will be amended as shown below.

Specifically, the success criterion for heat removal via SGs is following:

- Feefwater is supplied to two SGs by two emergency feedwater (EFW) pumps or by one EFW pump by opening EFW pump discharge tie line valves.

As pointed out in the question, it is necessary to release excessive steam through any either of turbine bypass valves, main steam relief valves or main steam safety valves. It is considered that the failure probability of all these valves to release steam is significantly smaller than the failure probability of the EFW system. It is therefore decided the success criteria for these systems are not necessary to discuss.

(2) The table description will be amended as shown below.

(3) The table description will be amended as shown below.

(4) The success criterion of 1 out of 3 CS/RHR pump is defined in case considering alternate core cooling, which is a mitigation feature for LOCA events. For this mitigation feature, water spill-out through the ruptured RCS piping is considered, and one train is eliminated from the total number of trains available for injecting RWSP water into the RCS. The table description will be amended as shown below.

(5) The table description will be amended as shown below.

Impact on DCD

There is no impact on DCD from this RAI as the response contains only additional information.

Impact on COLA

There is no impact on COLA from this RAI as the response contains only additional information.

Impact on PRA

Documentation of the PRA technical report will be revised.

RESPONSE TO REQUEST FOR ADDITIONAL INFORMATION

8/22//2008

US-APWR Design Certification

Mitsubishi Heavy Industries

Docket No.52-021

RAI NO.: **NO.35 REVISION 0**

SRP SECTION: **19 – Probabilistic Risk Assessment and Severe Accident Evaluation**

APPLICATION SECTION: **RG 1.206**

DATE OF RAI ISSUE: **7/24/2008**

QUESTION NO. : 19-80

At the introduction of Chapter 3 of the PRA report (page 3-1) it is stated that "The description of each event heading and branch of event trees is shown in Table 3.2.1.2-1 to Table 3.2.17.2-1." These tables appear to include undefined events and other terms as well as confusing information since in many instances there is more than one fault tree associated with a top event heading without any explanation. Please explain how the information provided in the last two columns, labeled "input event" and "bc set," is related to the first column, labeled "event heading name." Examples of confusing information provided in Tables 3.2.1.2-1 to 3.2.17.2-1 are:

- Events ZZ0 and RSS-RHR-LL in Table 3.2.1.2-1 are not defined.
- Event CXC in Table 3.2.2.2-1 has two input events (fault trees): RSS-CSS-HR and RSS-RHR-HRML. However, Table 6A.3-2 shows top event CXC associated with fault tree RSS-RHR-HRML and top event CXA associated with fault tree RSSCSS-HR.
- Event CXB in Table 3.2.3.2-1 has two input events (fault trees): RSS-CSS-HR and RSS-RHR-HRSL. However, Table 6A.3-2 shows top event CXB associated with fault tree RSS-RHR-HRSL and top event CXA associated with fault tree RSSCSS-HR.
- Event FNA8 in Table 3.2.5.2-1 has three input events (fault trees): NCC, NCC-SGDP2, and NCC-SG-DP3. However, fault trees NCC-SG-DP2 and NCC-SG-DP3 are not defined.

ANSWER:

(1) CS/RHR (alternate core cooling) is not credited for large break LOCA event in the PRA evaluation because it is assumed that time available for this operation is very limited. To the contrary, in the large break LOCA event tree, event heading representing CS/RHR (alternate core cooling) is included in the model since there is a possibility that this function can succeed regardless only limited time is available to achieve this function. Thus, the probability of event RSS-RHR-LL, which is the failure of this alternate core cooling, is set as 1.0 in order to meet the considered assumptions. In addition, the probability of the event ZZ0, which is the success of alternate core cooling, is set as 0.0. MHI agrees as pointed by staff that the explanation is not sufficient to clearly understand the model. The PRA technical report will be revised to include tables to clarify these relationships in the next revision.

(2) Description in Table 3.2.2.2-1 is correct. Table 6A.3-2 will be amended in the revised PRA technical report.

(3) Description in Table 3.2.3.2-1 is correct. Table 6A.3-2 will be amended in the revised PRA technical report.

(4) Event FNA8 has three input events (fault trees): NCC, NCC-SGDP2, and NCC-SG-DP3. Fault trees NCC-SGDP2 and NCC-SG-DP3 have same basic structure with NCC but the human error probability used is different. NCC-SGDP2 and NCC-SG-DP3 are fault trees used when dependencies between operator tasks needs to be taken into account in the human error probability. In addition, the detailed descriptions for the dependency of operator tasks are provided in Chapter 9 of the PRA technical report.

Impact on DCD

There is no impact on DCD from this RAI as the response contains only additional information.

Impact on COLA

There is no impact on COLA from this RAI as the response contains only additional information.

Impact on PRA

Documentation of the PRA technical report will be revised.

RESPONSE TO REQUEST FOR ADDITIONAL INFORMATION

8/22//2008

US-APWR Design Certification

Mitsubishi Heavy Industries

Docket No.52-021

RAI NO.: NO.35 REVISION 0

SRP SECTION: 19 – Probabilistic Risk Assessment and Severe Accident Evaluation

APPLICATION SECTION: RG 1.206

DATE OF RAI ISSUE: 7/24/2008

QUESTION NO. : 19-81

The information on system functions/success criteria for the CS/RHR system, provided in Table 6A.3-2 and Tables 6A.3-3 to 6A.3-10 of the PRA report, includes several conflicting and confusing statements that need clarification. Examples are:

- It appears to be conflicting information between Tables 6A.3-2 and 6A.3-7 and event trees for several initiating events. Tables 6A.3-2 and 6A.3-7 indicate that top event CXA "pump RWST water by CS/RHR, with cooling through the heat exchangers, to containment spray hearers" applies to initiating events, such as LLOCA, MLOCA, SLOCA and SGTR, which is not in agreement with the event trees. Please clarify and revise, as necessary.

- Table 6A.3-2 indicates that top event CRC applies to LLOCA, MLOCA and ELDV initiating events. However, the MLOCA event tree uses top event CRD which is not defined in Table 6A.3-2 or anywhere else. Event tree ELDV is not defined or discussed in the PRA. Please clarify and revise, as necessary.

- The top events CRB1 and CXB1 are used in the VSLOCA event tree, which are not defined. Please explain how are these events different from events CRB and CXB defined in Tables 6A.3-2, 6A.3-4 and 6A.3-8.

- Table 6A.3-2 indicates that both top events CXA and CXD are applicable to SGTR sequences only. However, the SGTR event tree shows only top event CXD for which no description is provided in Section 3.2.8.2 (a description of top event CXA is provided in Section 3.2.8.2). Please clarify and revise, as necessary.

- Top events CRA and CXD apply to SGTR accident sequences according to the information provided in Tables 6A.3-2, 6A.3-6 and 6A.3-10. However, there is no

discussion how these two events are different and under what conditions each of them apply. Please explain.

- Top events CXB (described in Section 3.2.3.2 for SLOCA) and CXC (described in Section 3.2.1.2 for LLOCA and in Section 3.2.2.2 for MLOCA) are described as "....heat removal from the containment vessel atmosphere and cooling of the RWSP water....using spray lines and CS/RHR pumps." However, these events are associated in Table 6A.3-2 with success criteria for injecting water to cold legs and to fault tree identifiers RSS-RHR-HRSL and RSS-RHR-HRLM, respectively. These fault tree identifiers are described in Tables 6A.3-8 and 6A.3-9, respectively, as "Intake RWSP water by CS/RHR pump and inject water by CS/RHR Heat Exchanger to Cold Legs Pipe." Please clarify and revise, as necessary.

ANSWER:

The relation between ET headings and FT headings are described in a series of tables 3.2.X.2-1 of the PRA technical report. These tables and the event tree figures will all be revised to improve readability in the next revision of the PRA technical report. Attachment 6A of the PRA technical report will also be entirely reviewed and amended to be consistent with Tables 3.2.X.2-1 in the next revision.

Tables and event tree figures of LLOCA, VSLOCA and SGTR and supporting notes are shown here to provide information of the top events pointed out in the question.

LLOCA

The relation between ET headings and FT headings of LLOCA are described in Table 3.2.1.2-1 and the event tree in Figure 3.2.1-1. These tables and figures will be incorporated in the revised PRA technical report. Tables in Attachment 6A will be entirely reviewed and amended to be consistent with the table 3.2.4.2-1.

VSLOCA

The relation between ET headings and FT headings of VSLOCA are described in Table 3.2.4.2-1 and the event tree in Figure 3.2.4-1. These tables and figures will be incorporated in the revised PRA technical report. Tables in Attachment 6A will be entirely reviewed and amended to be consistent with the table 3.2.4.2-1.

SGTR

The relation between ET headings and FT headings of SGTR are described in Table 3.2.5.2-1 and the event tree in Figure 3.2.5-1. These tables and figures will be incorporated in the revised PRA technical report. Tables in Attachment 6A will be entirely reviewed and amended to be consistent with the table 3.2.5.2-1.

Presented Table 6A.3-2 includes information used during the development of the PRA, and ELDV is no longer discussed in the current model. Table 6A.3-2 will be amended to reflect the latest information in the revised PRA technical report.

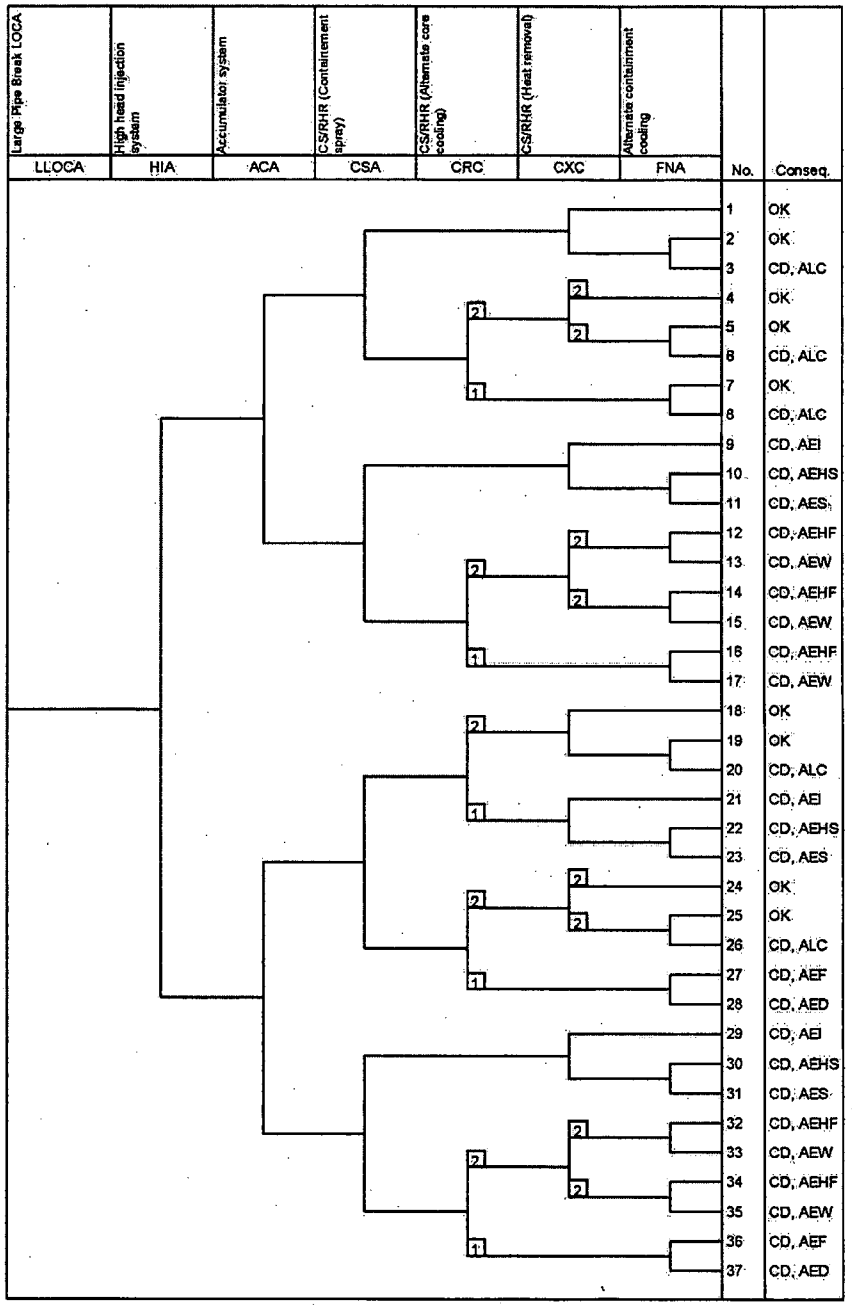

Figure 3.2.1-1 Large Pipe Break LOCA Event Tree

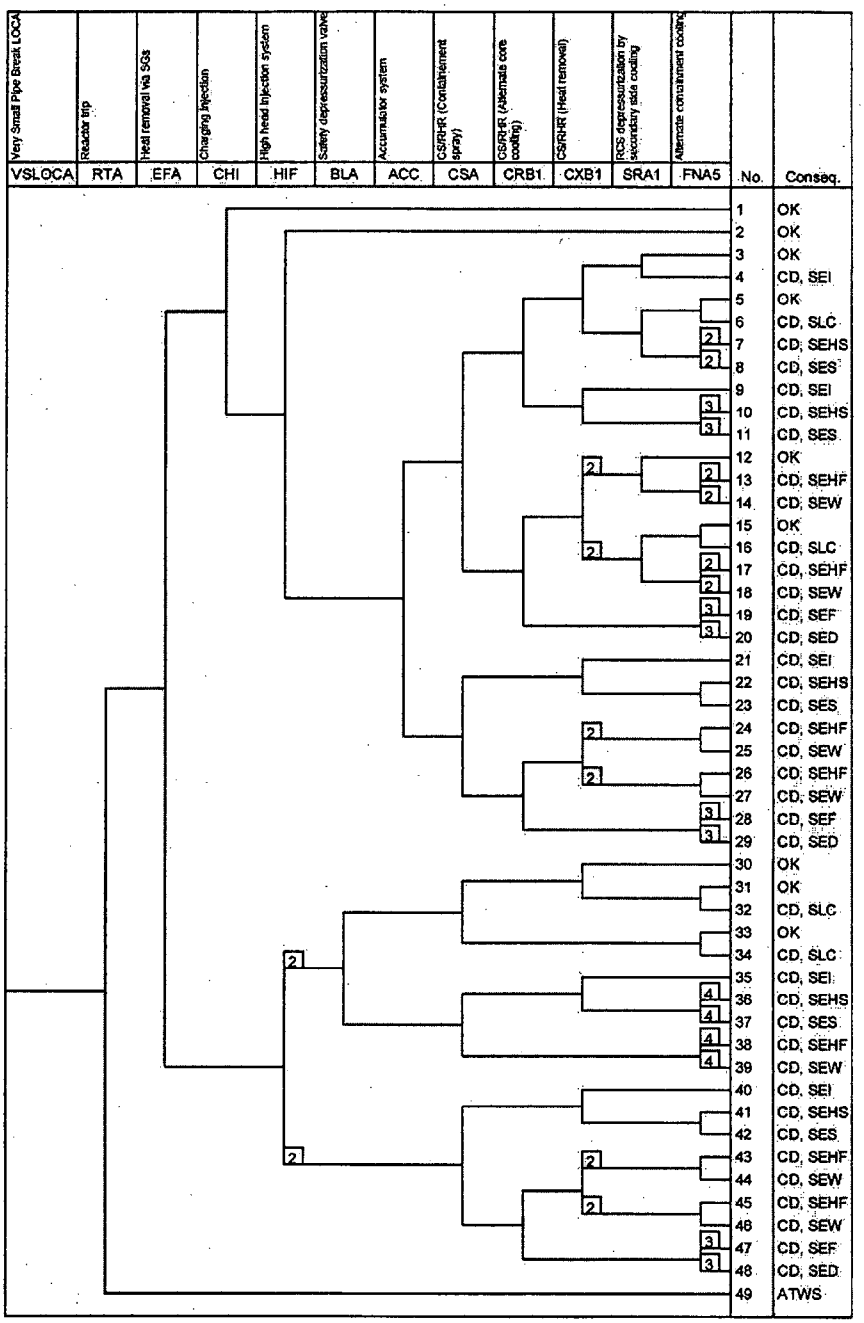

Figure 3.2.4-1 Very Small Pipe Break LOCA Event Tree

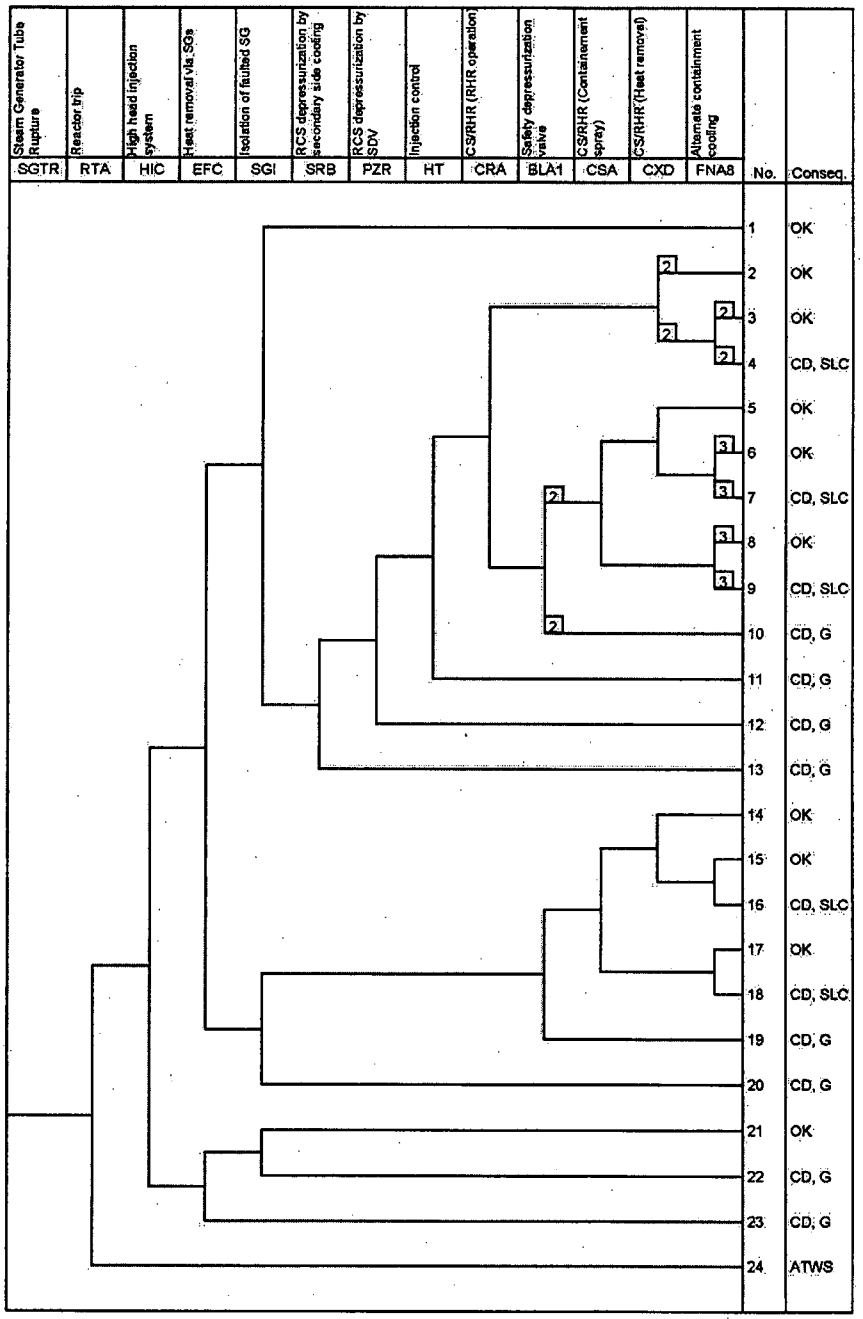

Figure 3.2.5-1 Steam Generator Tube Rupture Event Tree

Impact on DCD

There is no impact on DCD from this RAI as the response contains only additional information.

Impact on COLA

There is no impact on COLA from this RAI as the response contains only additional information.

Impact on PRA

Documentation of the PRA technical report will be revised.

RESPONSE TO REQUEST FOR ADDITIONAL INFORMATION

8/22//2008

US-APWR Design Certification

Mitsubishi Heavy Industries

Docket No.52-021

RAI NO.: **NO.35 REVISION 0**

SRP SECTION: **19 – Probabilistic Risk Assessment and Severe Accident Evaluation**

APPLICATION SECTION: **RG 1.206**

DATE OF RAI ISSUE: **7/24/2008**

QUESTION NO. : 19-82

In Section 3.2.6.2 of the PRA report (page 3-25) it is stated that "The Reactor Vessel Rupture Event Tree is shown in Figure 3.2.6-1. A description of each event heading and branch of Reactor Vessel Rupture Event is shown in Table 3.2.6.2-1." However, Figures 3.2.6-1 and 3.2.6.2-1 are not included in the PRA report. Please clarify and revise, as necessary.

ANSWER:

The event of "reactor vessel rupture" is assumed as excess LOCA, which directly results in core damage. Therefore, the event tree consists of only the initiating event. This figure has been deleted from the PRA report. The PRA report will be revised as follows:

(Revision 0) The Reactor Vessel Rupture Event Tree is shown in Fig 3.2.6-1. A description of each event heading and branch of Reactor Vessel Rupture Event is shown in Table 3.2.6.2-1.The failure of the reactor vessel is assumed to directly lead to core damage. The ACL for this event is assigned AEI.

to

(Revision 1) The reactor vessel rupture is assumed as excess LOCA which directly results in core damage. The ACL for this event is assigned AEI.

<u>Impact on DCD</u>

There is no impact on DCD from this RAI as the response contains only additional information.

Impact on COLA

There is no impact on COLA from this RAI as the response contains only additional information.

Impact on PRA

Documentation of the PRA technical report will be revised.

RESPONSE TO REQUEST FOR ADDITIONAL INFORMATION

8/22//2008

US-APWR Design Certification

Mitsubishi Heavy Industries

Docket No.52-021

RAI NO.: **NO.35 REVISION 0**

SRP SECTION: **19 – Probabilistic Risk Assessment and Severe Accident Evaluation**

APPLICATION SECTION: **RG 1.206**

DATE OF RAI ISSUE: **7/24/2008**

QUESTION NO. : 19-83

Several sequences in many event trees indicate that both containment spray (top event CSA) and alternate core injection by CS/RHR through the cold legs (e.g., top events CRB and CRB1) can be successful in same sequence (e.g., LLOCA sequence #18 and VSLOCA sequence #3). Since event CRB requires closing the containment spray header isolation valves (Table 6A.3-4), it appears that containment spray ceases its operation when alternate core injection is activated by the operator. Please state the key assumptions that were made and explain the basis of the assumed mission time for the containment spray function and the time window for successful switching to alternate core injection.

ANSWER:

In the US-APWR PRA for operations at power, containment spray system is modeled having two functions, i.e. ordinary containment spray function and alternate core cooling function. Containment spray system consists of 4 independent trains and these two functions can be achieved simultaneously. This alternate core cooling function is briefly described in DCD Subsection 19.2.5. Function and mission time of these functions are described below.

<u>Containment spray function:</u>
Containment spray header containment isolation valves are opened and CS/RHR pumps are activated upon issuance of containment spray signal, accordingly lines to supply RWSP water to spray header is set up.

Alternate core cooling function:
The CS/RHR pumps have function to supply RWSP water into the cold leg piping by manually switching over the CS/RHR pump lines to the cold leg in case of high head injection system failure.

Mission time for the containment spray function:
The mission time of containment spray system is defined as 24 hours considering the reduced heat removal ability from containment due to the application of alternate core cooling function. This mission time is discussed in Chapter 5 Section 5.6 of the PRA technical report and evaluated as sufficient time to mitigate the various accidental events.

Time window for successful switching to alternate core cooling:
The time from onset of accident till core uncovery is evaluated as approximately 30 minutes in Case1.4-1 of Chapter 5 Attachment A Table5A.1.4-1 of the PRA technical report, which assumes LOCA event with 8 in. diameter breach under failure of both high head injection system and alternate core cooling. From this evaluation result, it is considered that core damage can be prevented if alternate core cooling is achieved within 30 minutes after onset of LOCA. As stated in Chapter 5 Attachment A Table 5A.1.5-1, the success criterion of alternate core cooling to prevent core damage is 1 out of 4 cold leg injection. Hence, in the actual operation, switchover of two CS/RHR trains from containment spray line-up to alternate core cooling line-up is expected.

Major operator actions and the expected time are evaluated as following.

(1) RCS depressurization by secondary side cooling: Approximately 10 minutes
(To open main steam relief valve. This operation should be performed when alternate core cooling is required and the RCS pressure is higher than the CS/RHR pump shutoff head.)

(2) Switchover of two trains from containment spray line-up to alternate core cooling line-up: Approximately 10 minutes
(To close containment spray header containment isolation valve and open RHR flow control valve and RHR discharge line containment isolation valve)

It is evaluated through the success criteria analysis in Chapter 5 of the PRA technical report that the necessary time to reduce RCS pressure below the CS/RHR shutoff head via RCS depressurization by secondary side cooling is achieved within several minutes, less than 10 minutes. It is therefore considered that operations for alternate core cooling can be completed within 30 minutes.

Key assumption is that operations explained above are incorporated in the operational procedures, and the related activities are defined as a COL item in DCD Section 19.3 (i.e. COL 19.3(6).)

In addition, it should be noted that this alternate core cooling function is not credited in case of large break LOCA scenario, conservatively assuming that the operation can not be performed within the limited time available for operation. The event tree developed for the LBLOCA

includes a heading for alternate core cooling although the failure probability of this function is set as 1.0.

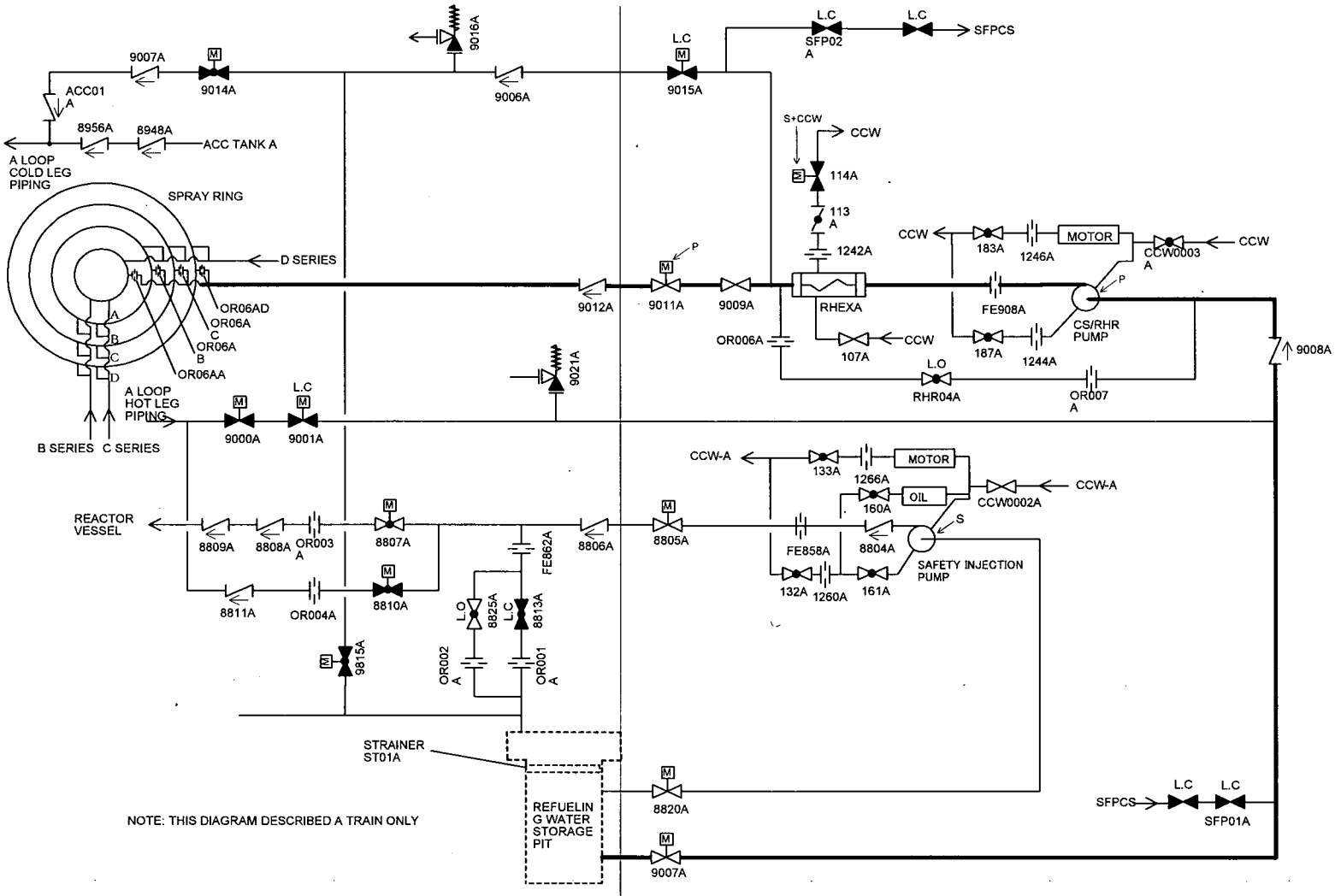

Figure 19-83.1 Containment spray

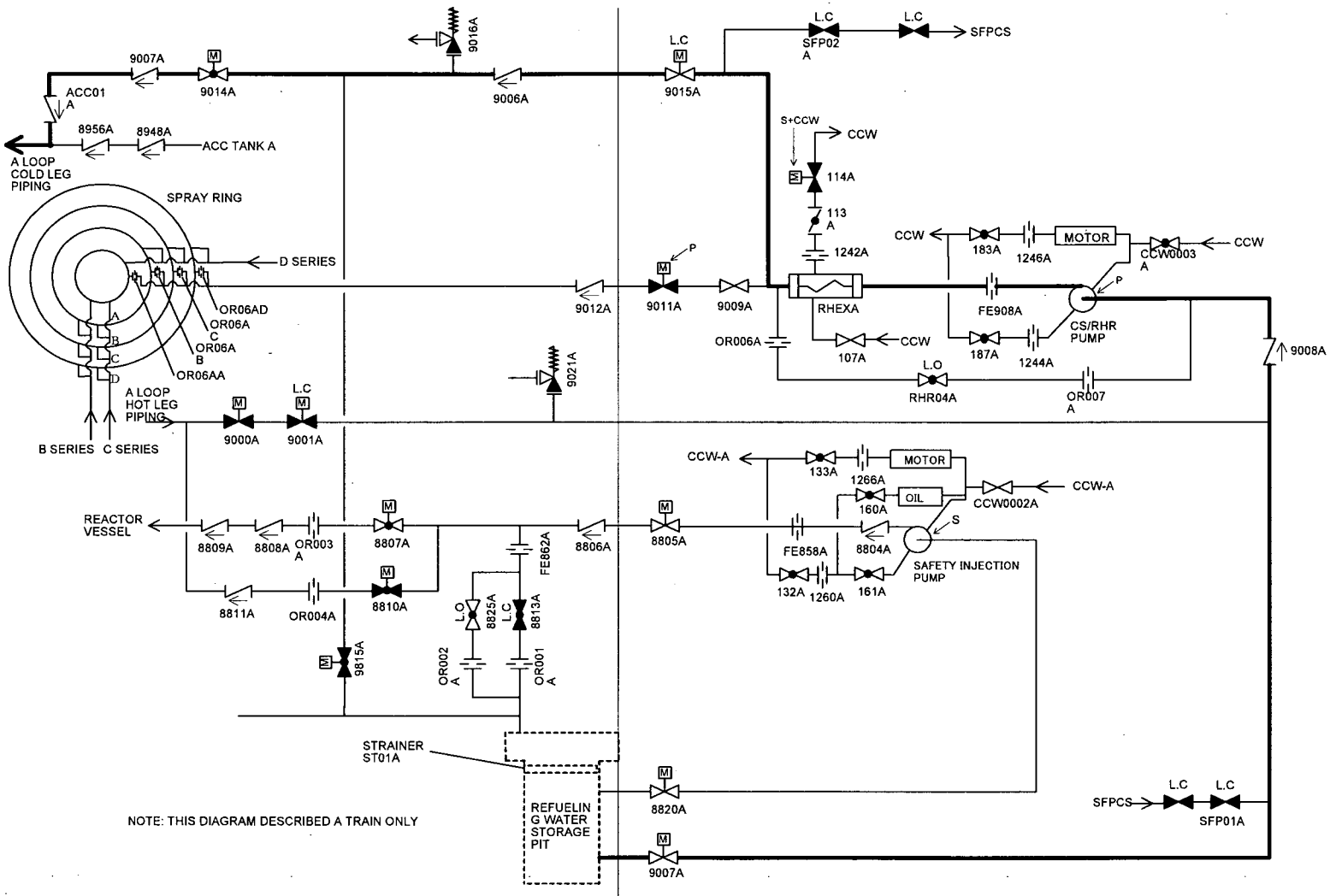

Figure 19-83.2 Alternate core injection

Impact on DCD

There is no impact on DCD from this RAI as the response contains only additional information.

Impact on COLA

There is no impact on COLA from this RAI as the response contains only additional information.

Impact on PRA

There is no impact on PRA from this RAI as the response contains only additional information.

RESPONSE TO REQUEST FOR ADDITIONAL INFORMATION

8/22//2008

US-APWR Design Certification

Mitsubishi Heavy Industries

Docket No.52-021

RAI NO.: **NO.35 REVISION 0**

SRP SECTION: **19 – Probabilistic Risk Assessment and Severe Accident Evaluation**

APPLICATION SECTION: **RG 1.206**

DATE OF RAI ISSUE: **7/24/2008**

QUESTION NO. : 19-84

The medium LOCA (MLOCA) event tree model is discussed in Section 3.2.2 of the PRA report. On page 3-6 it is stated: "In the medium LOCA, RCS pressure is higher than CS/RHR pumps zero-flow pressure, so the additional time to decrease the RCS pressure with secondary side cooling is required." On page 3-8, where the top event SRA is defined, it is stated: "When CS/RHR (Spray injection) System is not available, this measure depresses RCS pressure and enables to actuate CS/RHR (alternate injection) System and CS/RHR (heat removal) System." However, the staff notices that the top event SRA "Secondary side cooling to depressurize the RCS" is credited towards the end of the event tree and there are several MLOCA sequences (e.g., MLOCA sequences # 5 and #7), as well as sequences in the SLOCA and VSLOCA event trees, where CS/RHR injection and heat removal is credited without secondary side cooling. Please explain.

ANSWER:

As the staff has pointed out, CS/RHR (Alternate core cooling) and CS/RHR (Heat removal) are unavailable in the sequence #5 because of failure of RCS depressurization by secondary side cooling. Although event heading "RCS depressurization by secondary side cooling" should be located before "CS/RHR (Alternate core cooling)" from the viewpoint of event progression, the event heading is located towards the end of the event tree in order to reduce of the number of the event tree nodes. The sequence #5 is successful, because the function of injection to the core is successfully performed by high head injection system and accumulator, and decay heat removal function is successfully performed by alternate containment cooling.

In addition, in the sequence #4, CS/RHR (Alternate core cooling) and CS/RHR (Heat removal) are available because RCS depressurization by secondary side cooling has succeeded. The sequence #4 is successful, because the function of coolant injection to the core is successfully performed by CS/RHR (Alternate core cooling), and the function of decay heat removal is successfully performed by CS/RHR (Alternate core cooling) and CS/RHR (Heat removal).

In the sequence #7, alternate containment cooling is the only measure for decay heat removal, because CS/RHR (Heat removal) has failed.

In the sequence #9, alternate containment cooling is also the only measure for the decay heat removal, because CS/RHR (Alternate core cooling) has failed.

In the sequences #4, #7 and #9, the function of coolant injection to the core is successfully performed by high head injection system and accumulator system.

On the other hand, if high head injection system has failed, CS/RHR (Alternate core cooling) is the only measure for coolant injection to the core. In this case, RCS depressurization by secondary side cooling is necessary for the success of CS/RHR (Alternate core cooling). Sequences #20, #22, #29, and #32 therefore fall into this category.

Impact on DCD

There is no impact on DCD from this RAI as the response contains only additional information.

Impact on COLA

There is no impact on COLA from this RAI as the response contains only additional information.

Impact on PRA

There is no impact on PRA from this RAI as the response contains only additional information.

RESPONSE TO REQUEST FOR ADDITIONAL INFORMATION

8/22//2008

US-APWR Design Certification

Mitsubishi Heavy Industries

Docket No.52-021

RAI NO.: **NO.35 REVISION 0**

SRP SECTION: **19 – Probabilistic Risk Assessment and Severe Accident Evaluation**

APPLICATION SECTION: **RG 1.206**

DATE OF RAI ISSUE: **7/24/2008**

QUESTION NO. : 19-85

Two top events, related to secondary side cooling/depressurization, are used in the small LOCA (SLOCA) event tree. These two events, which are described in Section 3.2.3.2 of the PRA report, are (1) top event EFA "Emergency Feedwater System," and (2) top event SRA "Secondary side cooling to depressurize the RCS." Event EFA is defined as "...a combined operation of SG feed water by emergency feedwater system, and the actuation of either the main steam relief valves, the main steam safety valves or turbine bypass valves." Event SRA is defined as "....secondary side cooling to decrease RCS pressure and temperature by opening the main steam relief valves and supplying water with emergency feedwater system." Please discuss the differences between these two top events and state their success criteria in terms of minimum equipment needed for success, operator actions needed, and preferred means (if any) for performing the associated accident mitigation functions (e.g., turbine bypass valves versus main steam relief valves and main steam safety valves).

ANSWER:

Event heading EFA represents a mitigation function performed to remove decay heat from the RCS, while SRA represents a mitigation function performed not only to remove decay heat but to depressurize the RCS by heat removal via SGs. Functions and success criteria of EFA and SRA are summarized in Table 19-85.

Table 19-85 Functions and success criteria of EFA and SRA

Event Heading ID	EFA	SRA
Function	Remove decay heat from the RCS via SGs. This function is performed by supplying feedwater to the SGs and release excessive steam through either of main steam relief valve, main steam safety valves or turbine bypass valves.	Depressurize RCS by removing heat from RCS through SGs This function is performed by supplying feedwater to the SGs and releasing steam through manually opened main steam relief valve.
Success criteria	Supply feedwater to two out of four SGs from associated EFW pumps(1) OR Open EFW pump discharge tie-line isolation valves and supply feedwater to two out of four SGs from either one of the four EFW pumps(1)	Supply feedwater to three out of four SGs from three out four EFW pumps and manually open MSRV of the three intact SGs
Required operation	If three EFW pumps fails to supply feedwatar to the SGs, the operator must open the EFW pump discharge tie-line isolation valves	The operator must open main steam relief valves.

Note(1) Either the main steam relief valve, main steam safety valves or turbine bypass valves must open to release excessive steam. The probability of all of these valves to fail is considered to be much lower than the probability of EFW system to fail to supply feedwater, and therefore failure to release excessive steam is not modeled in the fault tree.

Impact on DCD

There is no impact on DCD from this RAI as the response contains only additional information.

Impact on COLA

There is no impact on COLA from this RAI as the response contains only additional information.

Impact on PRA

There is no impact on PRA from this RAI as the response contains only additional information.