**UNITED STATES**
**NUCLEAR REGULATORY COMMISSION**
REGION II
SAM NUNN ATLANTA FEDERAL CENTER
61 FORSYTH STREET, SW, SUITE 23T85
ATLANTA, GEORGIA 30303-8931

August 20, 2008

EA-08-220

Mr. Bruce H. Hamilton
Vice President
Duke Power Company, LLC
d/b/a Duke Energy Carolinas, LLC
McGuire Nuclear Station
12700 Hagers Ferry Road
Huntersville, NC 28078-8985

SUBJECT: MCGUIRE NUCLEAR STATION - NRC INSPECTION REPORT 05000369/2008008 AND 05000370/2008008; PRELIMINARY GREATER THAN GREEN FINDING

Dear Mr. Hamilton:

On December 31, 2007, the U.S. Nuclear Regulatory Commission (NRC) completed a quarterly integrated inspection at your McGuire Nuclear Station. The inspection findings were documented in NRC Inspection Report 05000369/2007005 and 05000370/2007005, which was issued on January 31, 2008.

Section 4OA3 of that report identified Unresolved Item (URI) 05000369,370/2007005-03, which concerned a failure to take adequate corrective action related to implementation of a safety-related service water (RN) strainer backwash system. Subsequent to additional inspection, the performance deficiency was identified as a failure to correct a significant condition adverse to quality identified in 2002 related to macro-fouling of the RN strainers, in that the corrective action failed to ensure that the design and licensing basis required ability for manual strainer backwash could be maintained even during accident conditions. More specifically, the 2003 plant modification that was implemented to address the macro-fouling concern (i.e., upgrade and reclassification of the strainer backwash function to safety-related): (1) utilized non-safety-related instrument air (VI) to maintain each RN pump's strainer backwash discharge valve open, but did not provide a means to manually open (or bypass) the discharge valve to support backwash operations upon a loss of VI; and (2) did not account for the impact on timely operator response from higher strainer macro-fouling rates (whether from fish or other potential sources) and expected (nuisance) strainer delta pressure alarms (without fouling) at the onset of high RN flow events (i.e., safety injection and loss of VI). As such, between 2003 and August 7, 2007, there was a lack of reasonable assurance that the RN system would be able to perform its safety-related function upon a safety injection or loss of VI event during periods of macro-fouling.

This finding was assessed based on the best available information, including influential assumptions, using the applicable Significance Determination Process (SDP) and was preliminarily determined to be a Greater Than Green Finding. Enclosed is a summary of the SDP Phase 3 analysis. It reflects a finding of greater than very low safety significance because, in the event of a loss of RN backwash capability, either through response to a safety injection signal or a loss of VI, that occurs during a time of high fouling potential, there was a lack of reasonable assurance that the RN system would have been capable of performing its safety-related function. The significance of the finding is influenced by uncertainties in the calculation for assumptions made for the initiating event frequency for the loss of VI, and for the calculated exposure time for the periods of fouling. Because of these uncertainties, the result was classified as Greater Than Green. The finding does not represent a current safety concern because temporary modifications and appropriate procedural changes have been made to address periods of potential macro-fouling.

The finding is also an apparent violation (AV) of 10 CFR 50 Appendix B Criterion XVI, Corrective Action, for the failure to correct a significant condition adverse to quality related to macro-fouling of the RN strainers. This apparent violation (identified as AV 05000369,370/2008008-01, Failure to Take Adequate Corrective Action for Implementation of Safety-Related RN Strainer Backwash) is being considered for escalated enforcement action in accordance with the NRC Enforcement Policy. Accordingly, for administrative purposes, URI 05000369,370/2007005-03 is considered closed. The current Enforcement Policy is included on the NRC's website at http://www.nrc.gov/about-nrc/regulatory/enforcement/enforce-pol.html.

In accordance with Inspection Manual Chapter (IMC) 0609, we intend to complete our evaluation using the best available information and issue our final determination of safety significance within 90 days of the date of this letter. The significance determination process encourages an open dialogue between the staff and the licensee; however, the dialogue should not impact the timeliness of the staff's final determination. Before we make a final decision on this matter, we are providing you an opportunity to: (1) present to the NRC your perspectives on the facts and assumptions, used by the NRC to arrive at the finding and its significance, at a Regulatory Conference or (2) submit your position on the finding to the NRC in writing. If you request a Regulatory Conference, it should be held within 30 days of the receipt of this letter and we encourage you to submit supporting documentation at least 1 week prior to the conference in an effort to make the conference more efficient and effective. If a Regulatory Conference is held, it will be open for public observation. The NRC will also issue a press release to announce the conference. If you decide to submit only a written response, such a submittal should be sent to the NRC within 30 days of the receipt of this letter.

Please contact Mr. Steven Rose at (404) 562-4647 within 10 business days of the date of your receipt of this letter to notify the NRC of your intentions. If we have not heard from you within 10 days, we will continue with our significance determination and enforcement decisions and you will be advised by separate correspondence of the results of our deliberations on this matter.

Since the NRC has not made a final determination in this matter, a Notice of Violation is not being issued at this time. In addition, please be advised that the number and characterization of the apparent violation(s) may change as a result of further NRC review.

In accordance with 10 CFR 2.390 of the NRC's "Rules of Practice," a copy of this letter and your response (if any) will be available electronically for public inspection in the NRC Public Document Room or from the Publicly Available Records (PARS) component of NRC's document system (ADAMS). ADAMS is accessible from the NRC web site at http://www.nrc.gov/reading-rm/adams.html (the Public Electronic Reading Room).

Sincerely,

***/JHM RA for/***

Leonard D. Wert, Jr., Director
Division of Reactor Projects

Docket Nos.: 50-369, 50-370
License Nos.: NPF-9, NPF-17

Enclosure: SDP Phase 3 Summary

cc w/encl. (See page 4)

In accordance with 10 CFR 2.390 of the NRC's "Rules of Practice," a copy of this letter and your response (if any) will be available electronically for public inspection in the NRC Public Document Room or from the Publicly Available Records (PARS) component of NRC's document system (ADAMS). ADAMS is accessible from the NRC web site at http://www.nrc.gov/reading-rm/adams.html (the Public Electronic Reading Room).

Sincerely,

***/JHM RA for/***

Leonard D. Wert, Jr., Director
Division of Reactor Projects

Docket Nos.: 50-369, 50-370
License Nos.: NPF-9, NPF-17

Enclosure: SDP Phase 3 Summary

cc w/encl. (See page 4)

X PUBLICLY AVAILABLE ☐ NON-PUBLICLY AVAILABLE ☐ SENSITIVE X NON-SENSITIVE

ADAMS: ☐ Yes ACCESSION NUMBER:_____ X SUNSI REVIEW COMPLETE ***SMS***

| OFFICE | RII:DRP | RII:DRS | RII:EICS | | | | |
|---|---|---|---|---|---|---|---|
| SIGNATURE | SDR /RA/ | RHB /RA/ | CFE /RA/ | | | | |
| NAME | SRose | RBernhard | CEvans | | | | |
| DATE | 08/07/2008 | 08/07/2008 | 08/07/2008 | | | | |
| E-MAIL COPY? | YES NO | YES NO | YES NO | YES NO | YES NO | YES NO | YES NO |

OFFICIAL RECORD COPY DOCUMENT NAME: I:\RPB1\MCGUIRE\RN STRAINERS\MCG FISH CHOICE LTR.DOC

cc w/encl:
Bruce Hamilton
Vice President
McGuire Nuclear Station
Duke Power Company, LLC d/b/a Duke
Energy Carolinas, LLC
Electronic Mail Distribution

Steven D. Capps
Engineering Manager
Duke Power Company, LLC d/b/a Duke
Energy Carolinas, LLC
Electronic Mail Distribution

Scotty L. Bradshaw
Training Manager
Duke Power Company, LLC d/b/a Duke
Energy Carolinas, LLC
Electronic Mail Distribution

Kenneth L. Ashe
Regulatory Compliance Manager
Duke Power Company, LLC d/b/a Duke
Energy Carolinas, LLC
Electronic Mail Distribution

R. L. Gill, Jr.
Manager
Nuclear Regulatory Issues & Industry Affairs
Duke Power Company, LLC d/b/a Duke
Energy Carolinas, LLC
Electronic Mail Distribution

Lisa F. Vaughn
Associate General Counsel
Duke Energy Corporation
526 South Church Street-EC07H
Charlotte, NC 28202

Kathryn B. Nolan
Senior Counsel
Duke Energy Corporation
526 South Church Street-EC07H
Charlotte, NC 28202

David A. Repka
Winston Strawn LLP
Electronic Mail Distribution

County Manager of Mecklenburg County
720 East Fourth Street
Charlotte, NC 28202

Beverly O. Hall
Chief, Radiation Protection Section
Department of Environmental Health
N.C. Department of Environmental
Commerce & Natural Resources
Electronic Mail Distribution

Dhiaa M. Jamil
Group Executive and Chief Nuclear Officer
Duke Energy Carolinas, LLC
Electronic Mail Distribution

Senior Resident Inspector
Duke Energy Corporation
William B. McGuire Nuclear Station
U.S. NRC
12700 Hagers Ferry Rd
Huntersville, NC 28078

Letter to Bruce H. Hamilton from Leonard D. Wert, Jr. dated August 20, 2008

SUBJECT: MCGUIRE NUCLEAR STATION - NRC INSPECTION REPORT 05000369/2008008 AND 05000370/2008008; PRELIMINARY GREATER THAN GREEN FINDING

Distribution w/encl:
C. Evans, RII
L. Slack, RII
OE Mail
RIDSNRRDIRS
PUBLIC
J. Stang, NRR

# Enclosure: Phase 3 Analysis

SRA Analysis Number: McG0703, Revision 2
Analysis Type:SDP Phase III
Inspection Report #: 50-369,370/2008008
Plant Name: McGuire
Unit Number: 1,2
Enforcement Action #: EA-08-220

Background: The licensee identified the lack of the ability to manually backwash the strainers on the nuclear service water (RN) system. The condition has existed for several years, following a modification to the backwash system. In addition, a new fish species in the lake has been shown to create a macro-fouling condition that would result in a common cause failure of the service water system if the ability to backwash the strainers was compromised. Attachment B is a simplified diagram of the RN system showing the relative functional location of the components.

On August 6, 2007, the licensee identified that the procedures for performing a manual backwash of the RN strainers (installed immediately upstream of the RN pumps) directed operators to use the non-seismically qualified, non-safety-related instrument air (VI) system to manipulate the valves required for the manual backwash function. As such, strainer backwashes could not readily be accomplished upon: (1) a loss of coolant accident (due to isolation of VI to backwash discharge valves from an SI signal); (2) a loss of offsite power concurrent with an unavailability of the diesel driven VI compressors (due to a loss of power to the motor driven VI compressors); or (3) a loss of VI (due to a VI pipe break/leak). The backwash procedures were written as part of a late 2003 plant modification (MGMM-14403) to upgrade and reclassify the RN filtering and backwash functions to “safety-related,” in response to NRC concerns (PIP M-02-2427). The concerns were that the changed environment of Lake Norman had caused seasonal macro-fouling of the strainers from increased concentrations of Alewife fish for several days during late July and early August. The basis for reclassification was to ensure proper operation of the strainer in the event that significant fouling from these fish occurred. In addition to the reliance on non-safety related VI, this modification also relied on other non-safety-related instrumentation and components for performing safety-related backwashes, including the UFSAR-credited strainer differential pressure (dP) instruments. This reliance on non-safety-related systems to perform the safety-related manual backwash function was not addressed during the modification process. Also not addressed was the impact on manual backwash response, with respect to: (1) the expected receipt of strainer dP alarms (without fouling) at the onset of increased RN pump flow-related events (i.e., safety injection and loss of VI); and the fish-induced higher strainer fouling rates. The macro-fouling vulnerability, as typified by the fish runs, could also possibly result from other forms of macro-fouling.

Since all RN trains are normally aligned to Lake Norman (via the Low Level Intake (LLI)) for their suction source, the ability to perform strainer backwashes during macro-fouling is vital to ensuring adequate RN system pump suction pressure and flow rates. The importance of this capability is reflected in the Updated Final Safety Analysis Report (UFSAR) and Design Basis Documents (DBD), which indicate that the RN Strainers would always have the ability to be manually backwashed during accident conditions regardless of the suction source (i.e., the Lake or the Nuclear Service Water Pond (NSWP). However, due to the dependence on non-safety-related VI and equipment, as well as the impact on operator response from higher strainer fouling rates and expected nuisance strainer dP alarms at the onset of SI and loss of VI events, the upgraded strainer backwash system and associated procedure changes did not preserve these UFSAR and DBD requirements. Note that normal backwash of the RN system is also dependent on Instrument Air to operate the Air Operated valves in the backwash lines.

## Enclosure: Phase 3 Analysis

Performance Deficiency: The performance deficiency concerns the failure of the licensee to adequately correct a significant condition adverse to quality identified in 2002 related to macro-fouling problems with the RN system pump strainers. More specifically, the safety-related RN strainer backwash system that was credited to preclude the fouling problem: (1) utilized non-safety-related VI to maintain each RN pump's strainer backwash discharge valve open, but did not provide a means to manually open (or bypass) the discharge valve to support backwash operations upon a loss of VI; and (2) did not account for the impact on timely operator response from higher strainer macro-fouling rates (whether induced by fish or other potential sources) and expected (nuisance) strainer d/p alarms (without fouling) at the onset of high RN flow events (i.e., SI and loss of VI). As such, there was a lack of reasonable assurance that the RN system would be able to perform its safety-related function upon a SI or loss of VI event during periods of macro-fouling.

Exposure Time – Greater than one year: The August 2006 to August 2007 conditions were used to determine the period of time that debris levels were high enough to cause a potential common cause failure of service water given a loss of backwash capability.

Date of Occurrence – Identified during August 2007

Safety Impact: The lack of an ability to manually backwash without VI exists year round. Most of the year both trains of service water take suction from a common source of water, the low level intake. The safety impact occurs when the quantity of debris from that source impacting the strainers is enough to require very frequent backwash. If the automatic backwash is not available or fails, a common cause failure of service water could result. The conditions that result in the highest safety impact are ones that cause failure of the backwash during a period when debris challenges the strainers with high flow blockage.

Conditions that result in a LOOP or an SI automatically swap the B Train to a source of water not subject to fouling, the Standby Nuclear Service Water Pond (SNSWP), start all four RN pumps, and separate each plants RN trains from each other. Since the strainers are just upstream of the pumps, changing the source water will not result in a decrease in strainer blockage, but if the swap occurred prior to severe blockage, the B train would continue to function. The A Train stays aligned to the fouled source, and will fail.

Risk Analysis/Considerations:

Assumptions:

1. The exposure period is limited to times of frequent backwash. A graph of the highest frequency backwash periods of 2007 is attached. Data for all 4 pumps strainers differential pressure state (normal, high) vs. time was used to derive this chart, and the exposure periods for the calculations. Depending on the assumption for "frequent", different exposure periods can result. The calculation will perform several runs that use the different calculated exposure periods based on frequency of backwash. A copy of the data for the last year of backwash times derived from plant records of normal or high pressure states in the strainer backwash instruments is attached.

2. The service water trains are rotated for uniform service time, so each is in service about 50% of the time. This is modeled in SPAR. The strainers backwash on high dP or on a signal from a timer set to about 120 hours since the last backwash.

3. At the time the deficiency was identified, the backwash required instrument air to operate. Backwash water comes from the pump discharge. Once the strainer is completely fouled, recovery is not possible, even with restoration of instrument air, or swapping to an alternate source of water. Any train that stays on the fouled source water long enough will always fail without backwash.

4. High enough fouling rates will load the strainers enough to cause eventual pump damage even if the pumps are realigned to the pond. Pumps with inadequate NPSH, but proper cooling will survive for a period of time. If the fouling is bad enough, inadequate flow rates through the pump will damage it through heatup in a very short period of time. The licensee has a letter from the pump manufacturer that indicates moderate NPSH problems are survivable for one hour without serious damage to the pump.

5. The licensee has provided calculations that show that for backwash intervals of greater than one hour, if the inservice train had just received a high signal to backwash when an SI or LOOP occurred, after the automatic or manual train swap to the alternate suction, the train would still be functional. This is because the strainer differential pressure backwash setpoint is set below the pressure that would result in an inop train. This means that for manual actions that transfer the suction for any train to the NSWP, the swapped train would survive, but any train left aligned to the low level intake would still foul when it auto started, resulting in a single train failed.

6. If a period of high fouling occurs during the recovery (within 24 hours) from a Loss of Instrument Air, the plant is still susceptible to loosing both trains of RN. This increases the effective exposure time for LOIA sequences. If an SI or LOOP recovery is in progress, fouling could lead to loss of the A train, which stays aligned to the LLI.

7. A LOOP has the potential to result in a loss of VI. An LER for McGuire describes a loss of VI caused by a LOOP. The system has been greatly modified since this time, and now includes backup diesel powered compressors. For a LOOP to cause a loss of VI, these compressors would have to fail. In addition, the B Train would swap to the alternate water source on the LOOP. The A Train would foul when it auto started, resulting in a single train failed. If the A train was in service due to the B Train being in maintenance, a LOOP or SI would result in loss of RN after the A Train (aligned automatically to the LLI) was fouled. Specific solutions for the risk of a LOOP induced LOIA will not be developed because of the low frequency of this initiator because of the diesel driven backup compressors.

8. The SPAR output includes cutsets that contain both the 50% factor for the percent of time a train is on service, and a term indicating the opposite train is in test and maintenance. This means SPAR modeling of train on service times reduces by 50% the importance of sequences that include maintenance terms for the off service train. Since the only time planned maintenance will be performed is when the train is not the on service train, the 50% reduction is not necessary. The additional risk is added back in through recovery rules after the CCDP is calculated by SPAR.

For LOOP or SI Signals:

9. On an SI signal the backwash is automatically inhibited until manual operator action resets the backwash function. For selected scenarios that result in an SI, different times are required to perform this manual action depending on the leak size. The timing used in the analysis was based on information provided by the licensee on approximate times to reset the automatic

backwash. These assumptions are discussed under the section on the method for calculating exposure times.

10. After an SI or LOOP, B Train swaps to the NSWP, and A Train will align to the low level intake. All trains of cooling water are separated from each other. Since one pump drives each train after realignment, loss of a pump is loss of a train. AP20 would be followed. The first A train pump loss on the LLI would not require a swap, because the procedure asks the operator to verify the other unit's RN pump status, which would be fine. The procedure would lead to total loss of A Train before requiring swapping the A train to the pond, because the second A train pump would need to fail before the other unit's RN would be abnormal in the LOSS OF RN, Case 2 procedure. This means both units will lose the A train, since the procedures will not direct the realignment

For Loss of Instrument Air:

11. On a loss of VI without a LOOP, the strainer backwash function (both automatic and manual) could not be performed after the air pressure was reduced. Since there is no SI or LOOP, there is no signal to automatically align the B RN trains to the SNSWP, or to separate the trains from each other. Due to the shared loss of VI, both Units Feedwater Regulation Valves (FRVs) would close, causing both units to trip on low steam generator level and the subsequent start of both MDAFW pumps. Each MDAFW pump train has an interlock with its associated RN pump train to auto start the RN pump when the MDAFW pump starts. The result would be both A and B trains of RN on both Units taking suction from Lake Norman's low level intake, without backwash capability. This could cause a common cause degradation and eventual loss of any RN train on either unit left aligned to the LLI.

12. The licensee credits use of the Hotwell and Condensate Booster Pumps for recovery of secondary side cooling for Loss of VI sequences. The use of this source is proceduralized in the EOPs. The Residents determined that the tempering line valves credited to restore flow to the SGs absent instrument air, have not been operated in over 10 years. This recovery will not be credited until it is proven the mechanical equipment required for the operator action will work. A sensitivity run will be made that assigns a manual credit of .1. The credit will be applied to the SPAR output, since SPAR does not model this recovery. To apply the credit, since Loss of AFW sequences are about 90% of the risk for LOIA, 90% of the risk will be multiplied by .1 and then added to the unaffected 10% of the original CCDP for the LOIA sequences.

13. Due to the loss of instrument air, many RN loads would go to their SI flow rate when their AOVs fail open. The higher RN flow rates could result in high strainer differential pressure alarms to come in for all pumps, even though they may not yet have loaded strainers. These alarms are expected by the control room operators, due to past experience during RN high flow testing with the SI loads flowing. Therefore the alarms may be ignored by operators due to the prior experience. **The system as originally designed would not receive the alarms during higher normal system flows, but degradation in the strainers has resulted in higher than design pressure differentials for a given flow. The strainers were not maintained over the years in a condition that would prevent these nuisance alarms**. As a result little or no credit should be given to their operators responding to high dP alarms early in the event.

14. Response to the loss of VI includes the following:

a. Credited operator action ***at about one hour*** after the loss of VI from the Loss of VI procedure, AP22:

## Enclosure: Phase 3 Analysis

"Check all four RN pumps are running (1A, 1B, 2A, and 2B RN pumps)"
IF NO, the procedure does not direct the operator to swap the "B" train pumps to the SNSWP
IF YES, the procedure directs the operator to swap the "B" train pumps to the SNSWP where no macrofouling concerns exist which could preserve the "B" trains from losing their safety function. Should any one pump not be operating for any reason (maintenance, fail to start, strainer already clogged) when this step is reached, all remaining pumps would remain aligned to Lake Norman and would be susceptible to strainer fouling and loss of function.

b. On loss of first RN pump when only one pump running per train:
If operators determine that the conditions for entry into AP-20 are met:
AP/1/A/5500/20, LOSS OF RN, Case I ,Loss of Operating RN Train, on loss of one train, has the U1 operators check the status of the U2's service water pumps, and if they don't have indications of a problem, the U1 operator starts the other RN pump. This could result in loss of the manually started pump due to fouling.

For most loss of instrument air scenarios, all four RN pumps are already running when the loss of RN step is reached. Absent an SI, all pumps will be in service to the low level intake until the U2's in service RN pump fouls also. At this time, when the U2 operator checks U1's RN status, one failed pump would be present, and both Unit's remaining pumps would then be swapped from the low level intake to the pond. This makes the assumption that the in-service train will foul first.

After a loss of instrument air, the service water trains do not separate, absent an SI. All four RN pumps would automatically start on Lake Norman suction due to motor driven auxiliary feedwater pump interlocks. The entry conditions for AP20 (loss of flow to a train) are low discharge pressure or abnormal flow from either RN pump. On the loss of a single RN pump, it is expected that the associated pump's discharge pressure annunciator would not alarm since the pressure instrument is located downstream of the cross-train pipe connection. Without train separation, the instrument would also sense the pressure supplied by the other operating RN pump. The abnormal flow annunciator (low flow set point) would alarm. Any alarm response procedure would not be acted on immediately, because emergency procedures (for the reactor trip due to loss of instrument air) receive priority. In addition, on the loss of a single pump with the other three pumps already operating and taking suction off Lake Norman, AP20 does not provide specific guidance for re-aligning the three remaining operating pumps to the SNSWP. (If multiple pumps fail, the operators would need to make a knowledge-based determination to go to Case II "Loss of Low Level Intake" of AP20 to realign any remaining pump suctions to the SNSWP.) Because the trains are not separated, the flow rates per pump, and per strainer, are significantly different than one pump driving only one train. An analysis with estimated system head loss and train head loss curves vs. pump flow is shown in Attachment M. Without separation of the trains, the system response as one pump degrades would result in confusing indications to the operators trying to troubleshoot what was causing the swings in system flow rates. Both the good strainer and the bad strainer would show varying differential pressures, as flows to both pumps swung in response to the changing conditions. This could set up conditions where if there is not realignment, both pumps could be lost. AP20 can not be fully credited to realign the remaining pumps, and the pumps will fail, unless the conditions of AP22 (all four RN pumps running) apply. In summary:

| Loss of Instrument Air | | | |
|---|---|---|---|
| All pumps start | | One pump Fails to Start or in Maintenance | |
| fouls < 1 hour | fouls > 1 hour | fouls < 1 hour | fouls > 1 hour |
| All Pumps Fail | AP22 swaps B train to NSWP | All Pumps Fail | AP22 does not swap |
| | | | AP20 entry conditions not clearly met with trains still connected absent an SI. May be some credit for longer fouling times to troubleshoot |

Therefore for scenarios that do not involve an SI or LOOP in which the strainer fouling times are very short (less than one hour), it is assumed that all 4 RN pumps will fail prior to any action that would save any RN pump. These cases will result in a loss of RN and Instrument Air simultaneously. For longer fouling times (greater than one hour), a loss of VI is assumed to result in one strainer fouling, resulting in an inop RN pump.

15. The licensee performed studies including thermal hydraulic calculations and timing validation for the ability of the operators to throttle AFW on a loss of instrument air. The action is performed in the control room by throttling a MOV. Local action would be required if this valves power or the control room were not available. The SPAR models event AFW-XHE-XM-AIR, OPERATOR FAILS TO THROTTLE AND CONTROL TDP- LOSS OF AIR/SBO was reevaluated using SPAR-H. The action evaluated for time available equal to about the time to perform the action, and high stress is evaluated at 2.0E-002. The base case is 2.5E-1, but it assumes action taken at the pump.

For all scenarios:
16. For sequences that involved test and maintenance terms for NSW pumps, the SPAR model did not have a recovery rule that eliminated the 50% service time for the opposite train. As a result, for Revision 0 of this SDP, slices were obtained to determine what part of the solution contained both a T&M term and maintenance on the opposite train, to add this amount back into the solution. Adding the sliced amount back in doubles the contribution of these sequences, effectively eliminating the 50% factor, as is appropriate. T&M will only be performed when the other train is in service, so the reduction is not necessary for these sequences. For the Revision 1 SPAR runs, a recovery rule to accomplish this was incorporated. Appendices O and P are the GEM run from Revision 0 and the accompanying Slice to show the impact of the adjustment, and to verify the rule properly implemented the change.

17. Cross connecting RN to the containment ventilation cooling water (RV) system was not assumed to be successful because of the following uncertainties:

a. The RV system pumps receive water from the LLI, and its strainers are assumed to fail due to similar macro-fouling concerns
b. The RV duplex strainer could be manually swapped to the “clean” strainer per guidance on Operator Aid Computer (OAC) alarm that would sound on high differential pressure, but that alarm would receive lowest priority during evolutions involving other emergency and abnormal procedures. It is uncertain as to when, if ever, this OAC alarm response would be completed in this particular complex scenario. In addition, there is uncertainty as to whether the clean strainer would also

become fouled prior to successfully backwashing original clogged strainer since the suction source would continue to be the fouled LLI water.

c. Assuming RV could operate, the three pumps can provide a total of slightly more than 9000 gpm for two units. Each unit's reactor building ventilation cooling loads, supplied by RV, do not isolate and continue to draw ~7000 gpm total. It is unclear what RN loads, could and would (by procedure) be saved with approximately 2000 gpm of cooling water to be shared and divided up by the remaining two units, even if more of the 7000 gpm reactor building ventilation cooling is diverted to RN. The licensee does not have an analysis for these conditions.

Based on all the given uncertainties, cross-connecting the non-safety RV system to RN is not credited for this particular complex scenario. This assumption duplicates an assumption made by the licensee. CVW-SYS-TM-RV, containment ventilation cooling water system maint & equip unavailability, is set to TRUE in the runs.

18. Basic Event SSF-XHE-XM-SYSNS, OPERATOR FAILS TO START AND ALIGN SSF DURING LONSR has a nominal value of 1E-2. This value is set to the licensee's value of 2.2E-002, since it is larger.

19 Because both units are impacted, NSR-XHE-XL-NSRSYS, FAILURE TO RECOVER FROM A LOSS OF NSW (RN) VIA X-TIE TO U2; and NSR-XHE-XL-NSRSYSL, FAILURE TO RECOVER NSR (RN) VIA X-TIE TO U2 FOR RCP SEALS, are both set to TRUE, to prevent the model from crediting recovery via the other unit.

PRA MODEL USED FOR BASIS OF THE RISK ANALYSIS: Updated SPAR model for McGuire, modified by hand calculations.

CALCULATIONS:

The calculation was made by determining the applicable exposure times and multiplying them times the annual core damage frequency generated by GEM for the various initiators. Additional adjustments were then made by hand for conditions not well represented by SPAR. The loss of SI sequences will be discussed, followed by the loss of Instrument sequences:

METHOD FOR CALCULATING EXPOSURE TIMES

The period of susceptibility for a high enough debris load to foul the strainers was determined through a review of plant records of differential pressure for each of the service water strainers. The data was imported into a spreadsheet, assigned values that allowed the different pump strainers to be identified, and graphed to a common time scale. A reduced copy of part of the graph is included as Attachment N.

Data from six years was available. The data from 2004 and 2007 showed the worst fouling potential. The last year of exposure was chosen as the period to be examined for this SDP. There may be susceptibilities other than fish. The graphs showed other times of higher than normal backwash rates in September and October for several years. The patterns showed that the fish impact was worse at night than during the day. Review of material on Alewife fish from credible sources on the internet showed mass die off of the fish is not uncommon. The literature indicates problems are also caused form live fish, due to their behavior. Canadian nuclear plants have seen intake impacts from Alewife. The New York Power Authority had Alewife problems during their past years of Nuclear Plant ownership. Information from research

studies they conducted indicates the fish stop swimming as vigorously at night, move in large schools, and change the elevation they swim in based on the level that their food is at. One source indicated they are attracted to lights. Some of these behaviors may explain the greater impact at night than in the day. The impact change with the time of day may also indicate live fish are involved.

The exposure times were determined by adding up the times during the one year time frame for all the periods where the backwash intervals were less than the duration of interest. Data provided by the utility for dP alarm state (normal, high) and the time of day for the change in state were used to construct an Excel database from which the calculations could be made. For the approximately 8000 data points for the one year period of interest, an algorithm was developed to add the time between backwashes for the different backwash intervals. If two backwashes occurred within 24 hours, the interval between them counted. In addition, the first backwash was assigned a duration that was twice the interval between the first and second backwashes. Attachment A contains a detailed review of the methods used and the results of the backwash time analysis.

SAFETY INJECTION OR LOSS OF OFFSITE POWER

The licensee's analysis showed that for sequences involving an SI or LOOP, with automatic train separation, the strainers would have sufficient margin to the fouling point to accomplish their mission.

SI or LOOP result in an automatic source water swap to the pond for the B train, and train separation. The remaining train would stay aligned to the LLI, and would fail due to fouling. The CDP was run for initiators that result in an SI or LOOP and assumed the loss of one train. The GEM runs were performed with initiators that would cause an SI or LOOP set to their nominal frequencies. In addition, the following Initiators were set to zero probability, because they do not result in an SI:

| | |
|---|---|
| IE-LDCEVDD | Loss of DC Bus B |
| IE-LOACA | Loss of Vital AC Bus 1A |
| IE-LOCCW | Loss of Component Cooling Water |
| IE-LOCHS | Loss of Condenser Heat Sink |
| IE-LOIA | Loss of Instrument Air |
| IE-LOMFW | Loss of Main Feedwater |
| IE-LONSR | Loss of Nuclear Service Water |
| IE-TRANS | Transient |

The SI sequences involved failure of the 'A' train if a backwash is not accomplished prior to fouling. The licensee indicated that the sequences that involve Large or Medium LOCAs will not reset the backwash for the RN strainers in a timely manner. In this analysis these sequences will use the exposure time for the strainer backwash intervals of up to 24 hours. Other sequences that involve a leak (i.e. SLOCA, RCP Seal LOCA, SORV) were indicated to take from 4 to 6 hours to recover the backwash function, and the exposure time will be determined by backwash intervals of less than 6 hours. The other SIs will use one hour, as this is the amount of time to reset the SI and restore the backwash function for those sequences without a leak from the primary. The initiating event frequencies for the SI initiators were left at their nominal rates.

## Enclosure: Phase 3 Analysis

In order to determine the CCDP for Seal LOCAs that do not result from initiators that do not normally cause an SI, A GEM run was made for the Initiators listed above as not causing an SI, and the results were sliced to extract any cutsets that contained the basic events indicating failure of an RCP seal. The results can be found in Attachment I. The cutsets were all less than 2% of the total for the slice, but were dominated by electrical bus failures and test and maintenance of cooling water systems, along with the A train failures from fouling, leading to a loss of RCP Seal integrity. Given the leak, and the failure of high pressure injection, core damage will result.

The SIs were run separately, the results were tabulated in an EXCEL spreadsheet, and the Change in CDF calculated by multiplying by the appropriate exposure time.

LOSS OF INSTRUMENT AIR INITIATING EVENT FREQUENCY:

McGuire experienced several Loss of Instrument Air events during the 1980's. The system has had extensive modifications, and changes to operating practices for the system since the events. The events can be excluded from a calculation of current LOIA initiating event frequency. Contractors at INEL updated the data from NUREG/CR-6928 to consider events in industry that have occurred since 2002. Their calculations are contained in Attachment D. The new industry mean is 9.69E-3. The new industry events included a pipe rupture of the kind that could rapidly depressurize instrument air. Plant specific characteristics may impact McGuire's susceptibility to some types of LOIA in the database, but for the purposes of this SDP, sufficient details are not available to modify the NRC plant model to accommodate them. A sensitivity will be performed to show the impact of a reduced frequency. The results will vary proportionately with changes in the IEF.

LOSS OF INSTRUMENT AIR CALCULATIONS

When calculating exposure times, all short backwash intervals (less than 60 minutes) were assumed to result in loss of both trains of NSW during a loss of instrument air. Many of these backwashes were less than 10 minutes apart. Recovery is not considered possible with the rapid loading of debris the strainers are seeing, and the time to recognize the problem and take action is longer than the time to fouling. Sixty minutes was also chosen as the time period to guarantee two fouled trains in the loss of VI sequences, because the licensee conducted an analysis that showed that less than one hour between backwashes could not be shown to have success (Assumption 5).

The single train losses were considered for exposures longer than one hour, but less than 24 hours. A review of the output from the loss of the 'A' train run indicates that virtually all of the risk is in sequences that have the 'B' train in test and maintenance. From Assumption 14. this will result in no swap of any pumps to the NSWP. This will result in both units pumps remaining on the low level intake, and subject to fouling. .

The licensee's analysis showed that for sequences after the train separation, that the loss of VI procedural actions would accomplish with the source water swap, the strainers would have sufficient margin to the fouling point to accomplish their mission. However, with the conditions that would exist prior to train separation, one pump could be supplying flow to multiple trains, and NPSH problems could result. Pump head/ system resistance curves were developed that approximate system flow conditions with degradation. These curves show head loss for single pump/multiple train configurations that far exceed what occurs for trains that are separated.

These curves confirm the vulnerability during the first hour of fouling. These curves are shown in Attachment M.

LOIA results were a calculated CCDP, given a LOIA, since LOIA was set to a probability of 1.0. This allows different Initiating event frequencies to be applied. All other initiators were set to False, except the loss of NSW which was set to 12.0 for the exposure time corresponding to less than one hour between backwashes. The LOIA cases were run separately, the results were tabulated in an EXCEL spreadsheet, and the Change in CDF calculated by multiplying by the appropriate exposure time.

CORE DAMAGE PROBABILITY:

Several cases were run using SPAR for the different potential outcomes of the fouling.

For Loss of instrument Air, two cases were run. The first was one where the fouling rates (less than one hour between backwashes) were high enough to cause loss of both trains due to fouling. The second case was for fouling rates of greater than one hour, in which case only one train is lost due to fouling. In addition, the CCDP was run for SI sequences with loss of one train, which would stay aligned to the LLI.

A review of the cutsets determined that because of the construction of the plant specific model's on service train flags, non-minimal cutsets exist in the solution. These are subtracted out manually from the solution.

In addition, the plant is vulnerable to strainer fouling that occurs within 24 hours of a loss of Instrument Air, or an SI or LOOP, because the plant will still be in recovery, and will be impacted by a loss in service water capability. This 24 hour period would be added for each period of vulnerability. The analysis uses only one period of vulnerability. This adds 24 hours to the exposure time, if instrument air was not recovered, or if a mechanical method to perform a backwash was not used. Additional periods would only increase the risk over the calculated numbers. Following is a summary of the results.

## Enclosure: Phase 3 Analysis

DELTA CDF FOR EXPOSURE TIME

| UNIT 1 | | | | | | | | | |
|---|---|---|---|---|---|---|---|---|---|
| Reset Backwash Time | DESCRIPTION | INITIATOR FREQUENCY | EXPOSURE TIME (HOURS) | SPAR OUTPUT | non minimal adjustment | TOTAL CDP for 1 year | TOTAL CDF for exposure | added exposure from 24 hour addition | all exposure Internal CDF |
| < 1hr | LOIA WITH LOSW | 9.69E-03 | 20.30 | 8.00E-02 | 3.60E-02 | 4.26E-04 | 9.88E-07 | 1.17E-06 | 2.16E-06 |
| 1<t<24 hr | LOIA WITH LOSS OF ONE TRAIN | 9.69E-03 | 549.35 | 1.03E-03 | 5.00E-04 | 5.14E-06 | 3.22E-07 | 1.41E-08 | 3.36E-07 |
| < 24 hrs | SI - LLOCA, MLOCA NO A | IN CALC | 569.66 | 1.70E-05 | 5.70E-06 | 1.13E-05 | 7.35E-07 | 3.10E-08 | 7.66E-07 |
| < 6 hrs | SI - SLOCA, SORV, SGTR NO A | IN CALC | 152.99 | 3.00E-04 | 7.11E-05 | 2.29E-04 | 4.00E-06 | 6.27E-07 | 4.62E-06 |
| < 6 hrs | SI- SEAL LOCA NO A | IN CALC | 152.99 | 1.60E-04 | | 1.60E-04 | 2.79E-06 | 4.38E-07 | 3.23E-06 |
| < 1 hr | SI - NO LEAK (LOOP / SLB) NO A | IN CALC | 20.30 | 2.50E-04 | | 2.50E-04 | 5.79E-07 | 6.85E-07 | 1.26E-06 |
| | TOTAL | | | | | | 9.42E-06 | 2.96E-06 | 1.24E-05 |

| UNIT 2 | | | | | | | | | |
|---|---|---|---|---|---|---|---|---|---|
| Reset Backwash Time | DESCRIPTION | INITIATOR FREQUENCY | EXPOSURE TIME (HOURS) | SPAR OUTPUT | non minimal adjustment | TOTAL CDP for 1 year | TOTAL CDF for exposure | added exposure from 24 hour addition | all exposure Internal CDF |
| < 1hr | LOIA WITH LOSW | 9.69E-03 | 42.16 | 8.00E-02 | 3.60E-02 | 4.26E-04 | 2.05E-06 | 1.17E-06 | 3.22E-06 |
| 1<t<24 hr | LOIA WITH LOSS OF ONE TRAIN | 9.69E-03 | 1301.09 | 1.03E-03 | 5.00E-04 | 5.14E-06 | 7.63E-07 | 1.41E-08 | 7.77E-07 |
| < 24 hrs | SI - LLOCA, MLOCA NO A | IN CALC | 1343.25 | 1.70E-05 | 5.70E-06 | 1.13E-05 | 1.73E-06 | 3.10E-08 | 1.76E-06 |
| < 6 hrs | SI - SLOCA, SORV, SGTR NO A | IN CALC | 299.98 | 3.00E-04 | 7.11E-05 | 2.29E-04 | 7.84E-06 | 6.27E-07 | 8.47E-06 |
| < 6 hrs | SI- SEAL LOCA NO A | IN CALC | 299.98 | 1.60E-04 | | 1.60E-04 | 5.48E-06 | 4.38E-07 | 5.92E-06 |
| < 1 hr | SI - NO LEAK (LOOP / SLB) NO A | IN CALC | 42.16 | 2.50E-04 | | 2.50E-04 | 1.20E-06 | 6.85E-07 | 1.89E-06 |
| | TOTAL | | | | | | 1.91E-05 | 2.96E-06 | 2.20E-05 |

## Enclosure: Phase 3 Analysis

Dominant sequences involve Loss of Instrument Air during very short fouling periods, failure to recover Air, Failure to operate the TDAFW pump manually, and a failure of Feed and Bleed due to the loss of cooling water. SI sequences involving small LOCA size leaks (SLOCA,SGTR, and SORV) and eventual fouling of the A train of Service Water, which is left on the low level intake for several hours without backwash. Injection fails in the SI sequences because the B train equipment is in test and maintenance at the beginning of the event , and fouling takes out the A train.

EXTERNAL EVENTS CONSIDERATIONS
Fire, flood, seismic and tornado induced SIs or Loss of instrument Air during the fish run will not constitute enough of a contributor to increase the color of the finding over the internal risk numbers.

Seismic initiators are 3 orders of magnitude less than LOOP initiator frequencies, so Seismic LOOP contributors will not be significant. Seismic fragilities for piping are higher than for the components that lead to loss of offsite power. For seismic piping breaks, the earthquake frequency would drop be another 2 orders of magnitude.

Tornado initiators are 2 orders of magnitude less than LOOP initiator frequencies, so Tornado LOOP contributors will not be significant.

Fire induced failure of the Instrument Air system was not specifically modeled, because the Diesel powered air compressors are not located with the AC powered compressors. The licensee uses a Service Building fire frequency that is conservatively assumed to cause a loss of Instrument Air of about 2E-5/year. This is over an order of magnitude less than the LOIA frequency in the analysis, and will be ignored. Fires leading to an SI can include fire induced LOOP. The licensee uses about 2E-5/year for an all consuming Turbine Building fire that causes a Loss of Offsite Power. This is several orders of magnitude less than the normal LOOP frequency, and will be ignored. A fire can also causes loss of a division of cooling water, but that in itself will not cause the SI that would lead to fouling of the other train.

LARGE EARLY RELEASE FREQUENCY IMPACT.
The sequences involved do not impact the hydrogen igniters but some SI sequences come from SGTRs, which are containment bypass sequences. The LERF impact of the SGTR can be based on CDF for those sequences. From Attachment H, the total of the dominant SGTR sequences is 7.2E-5. The total results of CDF from the Attachment H initiators is 4.6E-6 for Unit 1 and 8.5E-6 for Unit 2. The CDF contribution from SGTR can be calculated by multiplying these results by the ratio of the SGTR sequence contribution divided by the SPAR output for all initiators in the run, or 7.2E-5 / 3.0E-4 = .24. This results in a LERF value for Unit 1 of 1.1E-6, and of 2.0E-6 for Unit 2. These values represent about 10% of the CDF, and result in a Yellow LERF finding, consistent with the CDF result. The LERF results vary directly with the exposure time.

RECONCILIATION BETWEEN PHASE 3 AND PLANT NOTEBOOK/ PHASE 2 RESULTS
The attached Phase 1 and Phase 2 sheets were completed several months prior to the completion of the Phase 3. The RED result was enough to cause a Phase 3 to be initiated, which is the broad goal of a screening tool. Many of the assumptions changed between the time the two analyses were performed. If a complete Phase 2 were performed today, the results would have to be adjusted for the differences in the AFW recovery on loss of air, and an adjustment that would create a Stuck Open Safety Valves sheet that was constructed similar to

the SLOCA tree, similar to a change made to the SPAR model of record. A review of the data supporting NUREG/CR-6928 showed PWRs were susceptible to the Stuck Open Safety Valve initiator, which is not always modeled. A Phase 2 performed today using the presolved sheets would have to defer to the Plant notebooks, because loss of a train of nuclear service water is not modeled. The plant Notebooks would have to be solved for all initiators that caused an SI and for the LOIA sheets, taking out a single train of Service Water, and the components it serves, and failing all service water for the LOIA sheets. The Phase 2 sheets were not intended to be used for analyses this complicated. Appropriate exposure times would have been impossible to determine for each of the worksheets.

CONCLUSIONS/RECOMMENDATIONS - CDF increase over the base case was greater than 1E-6 for all cases. The values were greater than E-5 for the nominal cases, but were less than E-5 for the sensitivity runs in Attachment C. Based on currently available information, the finding is GREATER THAN GREEN for both units. These results are consistent with the LERF impact. A sensitivity was performed for using the lowest initiating event frequency calculated in Attachment D, using a Bayesian Update of the PWR Baseline from NUREG/CR-6928 with McGuire Experience Over 1988 – 2007, combined with an optimistic use of the Hotwell and Condensate booster pumps in place of failed AFW for most sequences. The results are listed in Attachment C, and are still greater than Green. The results are very dependent on the assumptions for determining the exposure times. The SI sequences contribute the most to the risk. The loss of the single train to the fouling, along with the other train being in test or maintenance with other losses leads to core damage. This SDP verifies the importance of proper maintenance and design of the plant nuclear service water system.

ATTACHMENTS
Attachment A Backwash Cycle Times Calculation
Attachment B Simplified Flow Diagram for Nuclear Service Water
Attachment C Sensitivity Studies Results.
Attachment D Loss of Instrument Air Initiating Event Frequency Calculation
SPAR Model Output:
Attachment E Loss of Instrument Air with Loss of Service Water
Attachment F Loss of Instrument Air with Loss of ‘A’ Train of Service Water
Attachment G Safety Injection with Loss of ‘A’ Train of Service Water
Attachment H SLOCA, SGTR,SORV w/ loss of 'A' Train
Attachment I Slice SealLOCA Sequences All Initiators Except SIs W/ Loss Of 'A' Train
Attachment J LOOP / SLB Initiators W/ Loss Of 'A' Train No Seal LOCA Sequences
Attachment K Phase I Screening Sheets (initial version)
Attachment L Phase 2 SDP Summary
Attachment M System Flow Balance Graph.
Attachment N Backwash Cycle Graph
Attachment O Loss of Instrument Air with Loss of ‘B’ Train of Service Water
Attachment P Slice reports to Adjust for Maintenance Cutsets with Train on Service Intervals
Attachment Q Pump Strainer dP Data Analysis

REVISION 1
Analyst: R. Bernhard Date: 06/20/2008

Reviewed By: Date:

REVISION 2
Analyst: R. Bernhard Date 7/24/08

Attachment A- Backwash Cycle Times Calculation

The utility supplied, by request raw data showing the state of the four strainer differential pressure signals which reflects the state of the dP at either NORMAL or HI as shown below. There were 54126 data points divided into four dP data points, covering the time period from January 1, 2001 until August 7, 2007. These points were in a condensed form which eliminated most of the NORMAL points, showing only two points every 9 hours or so. The HI points are indicated at their actual time of occurrence.

| | |
|---|---|
| 01-Aug-06 00:55:10 | NORMAL |
| 01-Aug-06 00:55:20 | NORMAL |
| 01-Aug-06 10:01:13 | NORMAL |
| 01-Aug-06 15:12:17 | HI |
| 01-Aug-06 15:12:27 | NORMAL |
| 02-Aug-06 00:18:25 | NORMAL |
| 02-Aug-06 02:39:52 | HI |
| 02-Aug-06 02:40:03 | NORMAL |
| 02-Aug-06 05:16:25 | HI |
| 02-Aug-06 05:16:35 | NORMAL |
| 02-Aug-06 14:22:34 | NORMAL |
| 02-Aug-06 14:22:44 | NORMAL |
| 02-Aug-06 23:28:39 | NORMAL |
| 03-Aug-06 00:49:46 | HI |
| 03-Aug-06 00:49:56 | NORMAL |
| 03-Aug-06 01:08:49 | HI |
| 03-Aug-06 01:08:59 | NORMAL |
| 03-Aug-06 05:58:29 | HI |
| 03-Aug-06 05:58:39 | NORMAL |
| 03-Aug-06 11:03:45 | HI |
| 03-Aug-06 11:03:55 | NORMAL |
| 03-Aug-06 11:45:28 | HI |
| 03-Aug-06 11:45:38 | NORMAL |
| 03-Aug-06 20:51:35 | NORMAL |
| 03-Aug-06 20:51:45 | NORMAL |

To visually represent the data to allow a quick review of periods of vulnerability, the different strainers Hi and NORMAL values were converted to numerical values that could be represented graphically through using the IF statement in EXCEL [i.e. =+IF(O37="NORMAL",-0.5,-1)]. A portion of this output is graphed with EXCEL and used in creating Attachment 10. Examining the output for all four strainers using a uniform time scale allowed visual evaluation of the various backwash cycles throughout the years, and to observe the impact on train swaps during periods of high backwash frequency.

Examination of the raw data revealed the HI signals to occur whenever they happened, but the NORMAL signals could occur whenever they happened, or if no dP driven backwash occurred sooner, about 9 hours after the last NORMAL. The period of interest chosen was the data from

Attachment A- Backwash Cycle Times Calculation

August 2006 until the end of the data available for the first part of August 2007 to represent the last year of exposure. The exposure periods are sensitive the amount of time between backwashes. Certain human actions occur at different times after the event starts, impacting the ability to recover from the event. It was necessary to determine how much of the year had backwashes occurring at which different frequencies. Looking at the above example, sequences of the various states can be used to estimate the backwash cycle times.

If the time between successive HIs exceeded 24 hours , and the first HI was not followed by a NORMAL-HI, it is impossible to estimate the duration of the fouling event, and the event was not counted. In this manner, single isolated events could be ignored. If two highs occurred within 24 hours of each other (i.e., a NORMAL-HI-NORMAL-HI-NORMAL occurred, or a combo with less than 24 hours between the two highs), the time between the two highs can be determined. The values in column C were determined by: =IF(D61=2, 0, +(A62-A61)*24+C61)

In addition, since this was not a single isolated event, a time should be assigned to the first HI, also. The value assigned was twice the value calculated for the time between the HI, and the following HI. Using twice the value assumes the fouling rate is half what it is between the two HIs. A series of nested IF statements were developed to calculate the backwash times. An example is:

=IF(D62=2, IF(C62<24, C62*60, IF((D62-D60)=0.5, IF((D62-D64)=0, C64*2*60, ""),"")),"")

The IF statements use the numerical values assigned to NORMAL and HI previously, and test the order of the states by subtracting the values. A sample of part of the new spreadsheet is:

| | A | B | C | D | E |
|---|---|---|---|---|---|
| | data points: | 2B RN PUMP STRAINER D/P DL | hours since last high | State | minutes between backwashes |
| | | m1d1686d2 | | | |
| | | | | | |
| 56 | 02-Aug-06 11:20:13 | NORMAL | 0.0 | 1.5 | |
| 57 | 02-Aug-06 20:26:13 | NORMAL | 9.1 | 1.5 | |
| 58 | 02-Aug-06 23:56:26 | HI | 12.6 | 2 | 756.22 |
| 59 | 02-Aug-06 23:56:36 | NORMAL | 0.0 | 1.5 | |
| 60 | 03-Aug-06 00:49:49 | HI | 0.9 | 2 | 53.22 |
| 61 | 03-Aug-06 00:49:59 | NORMAL | 0.0 | 1.5 | |
| 62 | 03-Aug-06 04:36:06 | HI | 3.8 | 2 | 226.12 |
| 63 | 03-Aug-06 04:36:16 | NORMAL | 0.0 | 1.5 | |
| 64 | 03-Aug-06 06:20:23 | HI | 1.7 | 2 | 104.12 |
| 65 | 03-Aug-06 06:20:34 | NORMAL | 0.0 | 1.5 | |

Attachment A- Backwash Cycle Times Calculation

SUMIF statements were used to capture the totals for the various durations [i.e. =SUMIF(K$46:K$2026,"<60")]. In addition, other statistics were derived, such as the number of occurrences for each time interval of interest using COUNTIF:

=COUNTIF(K$48:K$2026,"<180")-COUNTIF(K$48:K$2026,"<120"

The following table is a count of how many occurrences of time between backwashers of a certain duration occurred:

| | number of occurrences | | | | | | |
|---|---|---|---|---|---|---|---|
| time between backwash (hours) | 1A | 2A | 1B | 2B | Unit 1 Totals | Unit 2 Totals | TOTALS |
| 0 - 1 | 35.00 | 144.00 | 38.00 | 57.00 | 73.00 | 201.00 | 274.00 |
| 1 - 2 | 10.00 | 26.00 | 8.00 | 6.00 | 18.00 | 32.00 | 50.00 |
| 2 - 3 | 6.00 | 15.00 | 6.00 | 3.00 | 12.00 | 18.00 | 30.00 |
| 3 - 4 | 5.00 | 14.00 | 3.00 | 0.00 | 8.00 | 14.00 | 22.00 |
| 4 - 5 | 3.00 | 8.00 | 0.00 | 4.00 | 3.00 | 12.00 | 15.00 |
| 5 - 6 | 2.00 | 10.00 | 4.00 | 2.00 | 6.00 | 12.00 | 18.00 |
| 6 - 7 | 3.00 | 9.00 | 1.00 | 1.00 | 4.00 | 10.00 | 14.00 |
| 7 - 8 | 1.00 | 5.00 | 2.00 | 1.00 | 3.00 | 6.00 | 9.00 |
| 8 - 9 | 2.00 | 8.00 | 0.00 | 0.00 | 2.00 | 8.00 | 10.00 |
| >9 | 10.00 | 48.00 | 14.00 | 9.00 | 24.00 | 57.00 | 81.00 |

For August 2006 through August 2007 the following exposure times were calculated:

| | (hours by pump) | | | | | | |
|---|---|---|---|---|---|---|---|
| time between backwash | 1A | 2A | 1B | 2B | Unit 1 Totals | Unit 2 Totals | TOTALS |
| 0 - .5 hours | 2.13 | 13.13 | 7.47 | 8.70 | 9.60 | 21.83 | 31.43 |
| 0 - .75 hours | 3.36 | 22.82 | 9.18 | 10.67 | 12.54 | 33.49 | 46.03 |
| 0 - 1.0 hours | 6.73 | 30.64 | 13.58 | 11.52 | 20.30 | 42.16 | 62.47 |
| 0 - 1.25 hours | 11.16 | 37.36 | 17.09 | 16.08 | 28.25 | 53.43 | 81.68 |
| 0 - 1.5 hours | 16.91 | 53.94 | 22.93 | 16.08 | 39.84 | 70.02 | 109.86 |
| 0 - 2 hours | 20.43 | 67.37 | 24.67 | 19.63 | 45.09 | 87.01 | 132.10 |
| 0 - 3 hours | 37.38 | 104.34 | 40.51 | 27.06 | 77.89 | 131.40 | 209.28 |
| 0 - 4 hours | 55.28 | 152.22 | 51.14 | 27.06 | 106.42 | 179.28 | 285.70 |
| 0 - 5 hours | 69.05 | 188.33 | 51.14 | 45.22 | 120.19 | 233.55 | 353.75 |
| 0 - 6 hours | 79.72 | 244.01 | 73.27 | 55.97 | 152.99 | 299.98 | 452.97 |
| 0 - 7 hours | 99.12 | 302.48 | 79.98 | 62.90 | 179.10 | 365.38 | 544.48 |
| 0 - 8 hours | 106.91 | 340.48 | 95.28 | 69.93 | 202.18 | 410.41 | 612.60 |
| 0 - 9 hours | 124.36 | 407.82 | 95.28 | 69.93 | 219.64 | 477.75 | 697.39 |
| all | 252.94 | 1112.63 | 316.72 | 230.62 | 569.66 | 1343.25 | 1912.90 |

Attachment A- Backwash Cycle Times Calculation

Graphically this is:

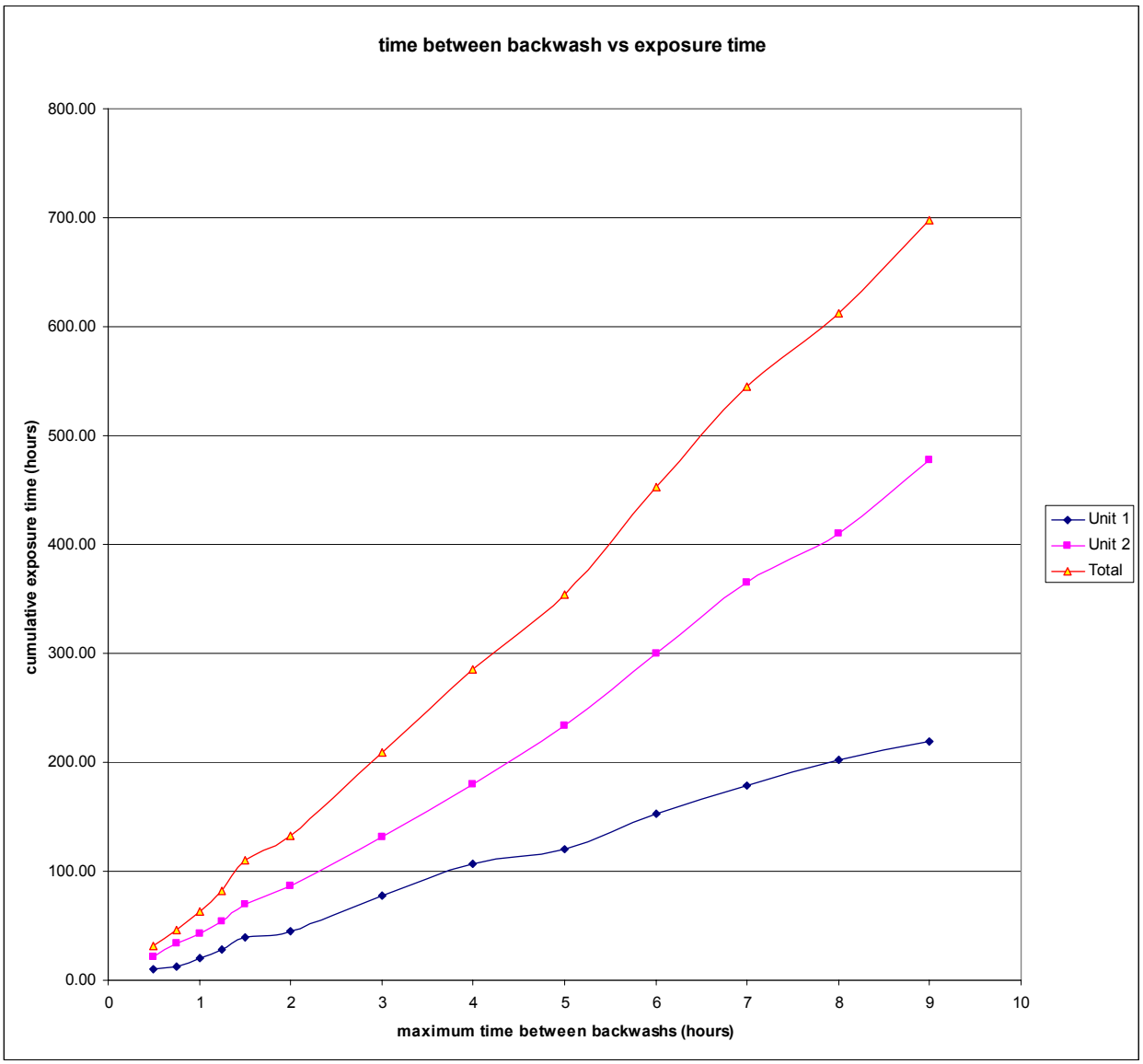


The very frequent backwashes of short durations accumulate exposure at the same rate as the fewer longer duration backwashes. This indicates risk would accumulate approximately proportionally with the duration of the assumed period of vulnerability for loss each of the initiators. This SDP uses the sum of the backwash times as the exposure time.

ATTACHMENT B - SIMPLIFIED FLOW DIAGRAM FOR NUCLEAR SERVICE WATER

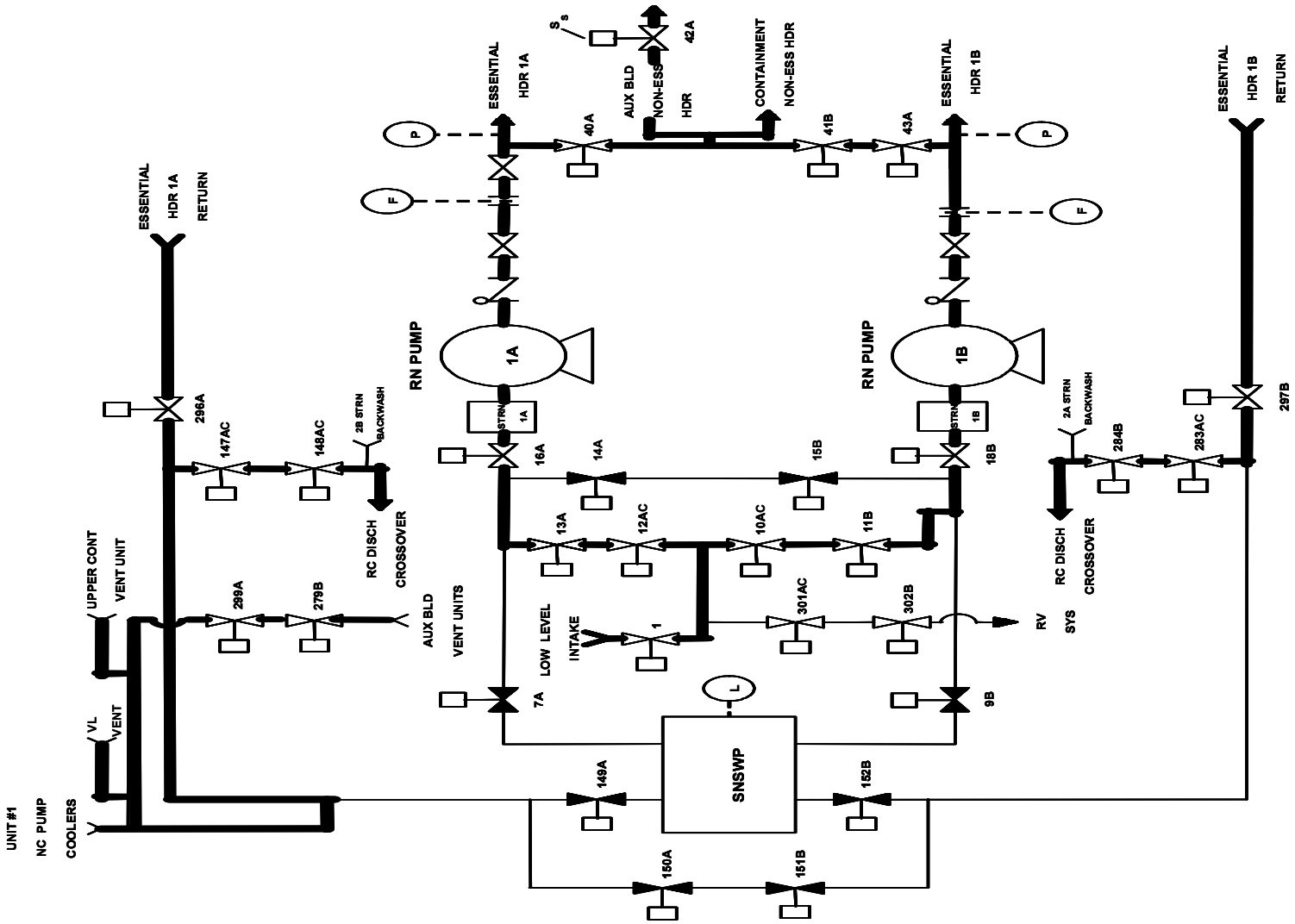

Attachment C - Sensitivity Studies Results.

| UNIT 1 | | | | | | | | | | | |
|---|---|---|---|---|---|---|---|---|---|---|---|
| Reset Backwash Time | Description | LOIA Frequency | Exposure Time (Hours) | SPAR Output | Non Minimal Adjustment | HRA For Hotwell/ Booster | Credit Hotwell/ Booster .9*CCDP* HRA+.1 *CCDP | Total CDP For 1 Year | Total CDF For Exposure | Added Exposure From 24 Hour Addition | All Exposure Internal CDF |
| < 1hr | LOIA WITH LOSW | 5.95E-03 | 20.30 | 8.00E-02 | 3.60E-02 | 1.00E-01 | 8.36E-03 | 4.97E-05 | 1.15E-07 | 1.36E-07 | 2.52E-07 |
| 1<t<24 hr | LOIA WITH LOSS OF ONE TRAIN | 5.95E-03 | 549.35 | 1.03E-03 | 5.00E-04 | 1.00E-01 | 1.01E-04 | 5.99E-07 | 3.76E-08 | 1.64E-09 | 3.92E-08 |
| < 24 hrs | SI - LLOCA, MLOCA NO A | IN CALC | 569.66 | 1.70E-05 | 5.70E-06 | 1.00E+00 | 1.13E-05 | 1.13E-05 | 7.35E-07 | 3.10E-08 | 7.66E-07 |
| < 6 hrs | SI - SLOCA, SORV, SGTR NO A | IN CALC | 152.99 | 3.00E-04 | 7.11E-05 | 1.00E+00 | 2.29E-04 | 2.29E-04 | 4.00E-06 | 6.27E-07 | 4.62E-06 |
| < 6 hrs | SI- SEAL LOCA NO A | IN CALC | 152.99 | 1.60E-04 | | 1.00E+00 | 1.60E-04 | 1.60E-04 | 2.79E-06 | 4.38E-07 | 3.23E-06 |
| < 1 hr | SI - NO LEAK (LOOP / SLB) NO A | IN CALC | 20.30 | 2.50E-04 | | 1.00E+00 | 2.50E-04 | 2.50E-04 | 5.79E-07 | 6.85E-07 | 1.26E-06 |
| | TOTAL | | | | | | | | 8.26E-06 | 1.92E-06 | 1.02E-05 |

| Reset Backwash Time | Description | LOIA Frequency | Exposure Time (Hours) | SPAR Output | Non Minimal Adjustment | HRA For Hotwell/ Booster | Credit Hotwell/ Booster .9*CCDP* HRA+.1 *CCDP | Total CDP For 1 Year | Total CDF For Exposure | Added Exposure From 24 Hour Addition | All Exposure Internal CDF |
|---|---|---|---|---|---|---|---|---|---|---|---|
| < 1hr | LOIA WITH LOSW | 5.95E-03 | 20.30 | 8.00E-02 | 3.60E-02 | 1.00E-01 | 1.52E-02 | 9.04E-05 | 2.10E-07 | 2.48E-07 | 4.57E-07 |
| 1<t<24 hr | LOIA WITH LOSS OF ONE TRAIN | 5.95E-03 | 549.35 | 1.03E-03 | 5.00E-04 | 1.00E-01 | 1.96E-04 | 1.16E-06 | 7.30E-08 | 3.19E-09 | 7.62E-08 |
| < 24 hrs | SI - LLOCA, MLOCA NO A | | 569.66 | 1.70E-05 | 5.70E-06 | 1.00E-01 | 3.23E-06 | 3.23E-06 | 2.10E-07 | 8.85E-09 | 2.19E-07 |
| < 6 hrs | SI - SLOCA, SORV, SGTR NO A | | 152.99 | 3.00E-04 | 7.11E-05 | 1.00E-01 | 5.70E-05 | 5.70E-05 | 9.95E-07 | 1.56E-07 | 1.15E-06 |
| < 6 hrs | SI- SEAL LOCA NO A | | 152.99 | 1.60E-04 | | 1.00E-01 | 3.04E-05 | 3.04E-05 | 5.31E-07 | 8.33E-08 | 6.14E-07 |
| < 1 hr | SI - NO LEAK (LOOP / SLB) NO A | | 20.30 | 2.50E-04 | | 1.00E+00 | 2.50E-04 | 2.50E-04 | 5.79E-07 | 6.85E-07 | 1.26E-06 |
| | TOTAL | | | | | | | | 2.60E-06 | 1.18E-06 | 3.78E-06 |

Attachment C - Sensitivity Studies Results.

| | | | | | | | | | | | |
|---|---|---|---|---|---|---|---|---|---|---|---|
| Reset Backwash Time | Description | LOIA Frequency | Exposure Time (Hours) | SPAR Output | Non Minimal Adjustment | HRA For Hotwell/ Booster | Credit Hotwell/ Booster .9*CCDP* HRA+.1 *CCDP | Total CDP For 1 Year | Total CDF For Exposure | Added Exposure From 24 Hour Addition | All Exposure Internal CDF |
| < 1hr | LOIA WITH LOSW | 5.95E-03 | 42.16 | 8.00E-02 | 3.60E-02 | 1.00E-01 | 8.36E-03 | 4.97E-05 | 2.39E-07 | 1.36E-07 | 3.76E-07 |
| 1<t<24 hr | LOIA WITH LOSS OF ONE TRAIN | 5.95E-03 | 1301.09 | 1.03E-03 | 5.00E-04 | 1.00E-01 | 1.01E-04 | 5.99E-07 | 8.90E-08 | 1.64E-09 | 9.06E-08 |
| < 24 hrs | SI - LLOCA, MLOCA NO A | IN CALC | 1343.25 | 1.70E-05 | 5.70E-06 | 1.00E+00 | 1.13E-05 | 1.13E-05 | 1.73E-06 | 3.10E-08 | 1.76E-06 |
| < 6 hrs | SI - SLOCA, SORV, SGTR NO A | IN CALC | 299.98 | 3.00E-04 | 7.11E-05 | 1.00E+00 | 2.29E-04 | 2.29E-04 | 7.84E-06 | 6.27E-07 | 8.47E-06 |
| < 6 hrs | SI- SEAL LOCA NO A | IN CALC | 299.98 | 1.60E-04 | | 1.00E+00 | 1.60E-04 | 1.60E-04 | 5.48E-06 | 4.38E-07 | 5.92E-06 |
| < 1 hr | SI - NO LEAK (LOOP / SLB) NO A | IN CALC | 42.16 | 2.50E-04 | | 1.00E+00 | 2.50E-04 | 2.50E-04 | 1.20E-06 | 6.85E-07 | 1.89E-06 |
| | TOTAL | | | | | | | | 1.66E-05 | 1.92E-06 | 1.85E-05 |

| Reset Backwash Time | Description | LOIA Frequency | Exposure Time (Hours) | SPAR Output | Non Minimal Adjustment | HRA For Hotwell/ Booster | Credit Hotwell/ Booster .9*CCDP* HRA+.1 *CCDP | Total CDP For 1 Year | Total CDF For Exposure | Added Exposure From 24 Hour Addition | All Exposure Internal CDF |
|---|---|---|---|---|---|---|---|---|---|---|---|
| < 1hr | LOIA WITH LOSW | 5.95E-03 | 53.42 | 8.00E-02 | 3.60E-02 | 1.00E-01 | 1.52E-02 | 9.04E-05 | 5.52E-07 | 2.48E-07 | 7.99E-07 |
| 1<t<24 hr | LOIA WITH LOSS OF ONE TRAIN | 5.95E-03 | 516.06 | 1.03E-03 | 5.00E-04 | 1.00E-01 | 1.96E-04 | 1.16E-06 | 6.86E-08 | 3.19E-09 | 7.18E-08 |
| < 24 hrs | SI - LLOCA, MLOCA NO A | | 569.48 | 1.70E-05 | 5.70E-06 | 1.00E-01 | 3.23E-06 | 3.23E-06 | 2.10E-07 | 8.85E-09 | 2.19E-07 |
| < 6 hrs | SI - SLOCA, SORV, SGTR NO A | | 373.54 | 3.00E-04 | 7.11E-05 | 1.00E-01 | 5.70E-05 | 5.70E-05 | 2.43E-06 | 1.56E-07 | 2.59E-06 |
| < 6 hrs | SI- SEAL LOCA NO A | | 373.54 | 1.60E-04 | | 1.00E-01 | 3.04E-05 | 3.04E-05 | 1.30E-06 | 8.33E-08 | 1.38E-06 |
| < 1 hr | SI - NO LEAK (LOOP / SLB) NO A | | 53.42 | 2.50E-04 | | 1.00E+00 | 2.50E-04 | 2.50E-04 | 1.52E-06 | 6.85E-07 | 2.21E-06 |
| | TOTAL | | | | | | | | 6.08E-06 | 1.18E-06 | 7.27E-06 |

| LOIA Events in IEDB (through November 2007?) | | | | | | | |
|---|---|---|---|---|---|---|---|
| 02/26/2008 | | | | | | | |
| | | | | | | | |
| D Pneumatic | D1 Plant Air | Initial Plant Fault | Event Date | LER Number | Plant Name | Plant Type | |
| TRUE | TRUE | D1 | 09/03/1987 | 2451987038 | MILLSTONE 1 | B | |
| TRUE | TRUE | D1 | 01/20/1988 | 4101988001 | NINE MILE PT. 2 | B | |
| TRUE | TRUE | D1 | 09/05/1988 | 4161988013 | GRAND GULF | B | |
| TRUE | TRUE | D1 | 10/15/1988 | 2651988026 | QUAD CITIES 2 | B | |
| TRUE | TRUE | D1 | 01/04/1989 | 3871989001 | SUSQUEHANNA 1 | B | |
| TRUE | TRUE | QC4 | 04/10/1990 | 3411990003 | FERMI 2 | B | |
| TRUE | TRUE | D1 | 05/14/1990 | 4101990009 | NINE MILE PT. 2 | B | |
| TRUE | TRUE | D1 | 09/13/1990 | 3311990015 | DUANE ARNOLD | B | |
| TRUE | TRUE | D1 | 12/10/1990 | 4161990028 | GRAND GULF | B | |
| TRUE | TRUE | D1 | 11/16/1992 | 3741992016 | LASALLE 2 | B | |
| TRUE | TRUE | D1 | 01/16/1993 | 2491993004 | DRESDEN 3 | B | |
| TRUE | TRUE | D1 | 04/30/1994 | 2371994005 | DRESDEN 2 | B | |
| TRUE | TRUE | D1 | 05/22/2006 | 2982006004 | COOPER STATION | B | |
| TRUE | TRUE | D1 | 01/27/1987 | 3171987003 | CALVERT CLIFFS 1 | P | |
| TRUE | TRUE | D1 | 08/04/1987 | 4001987041 | HARRIS | P | |
| TRUE | TRUE | D1 | 12/07/1987 | 3461987015 | DAVIS-BESSE | P | |
| TRUE | TRUE | D1 | 07/24/1988 | 4571988019 | BRAIDWOOD 2 | P | |
| TRUE | TRUE | D1 | 11/15/1988 | 4561988025 | BRAIDWOOD 2 | P | |
| TRUE | TRUE | D1 | 11/15/1988 | 4561988025 | BRAIDWOOD 1 | P | |
| TRUE | TRUE | D1 | 12/15/1988 | 4241988043 | VOGTLE 1 | P | |
| TRUE | TRUE | D1 | 07/01/1990 | 2801990006 | SURRY 1 | P | |
| TRUE | TRUE | D1 | 11/19/1990 | 2851990026 | FORT CALHOUN | P | |
| TRUE | TRUE | D1 | 01/24/1992 | 5301992001 | PALO VERDE 3 | P | |
| TRUE | TRUE | D1 | 04/18/1996 | 3061996002 | PRAIRIE ISLAND 2 | P | |
| TRUE | TRUE | D1 | 08/01/1997 | 3271997012 | SEQUOYAH 1 | P | Included in baseline period of 1997 - 2002 (NUREG/CR-6928) |
| TRUE | TRUE | D1 | 06/22/2001 | 3342001001 | BEAVER VALLEY 1 | P | Included in baseline period of 1997 - 2002 (NUREG/CR-6928) |

| | | | | | | | |
|---|---|---|---|---|---|---|---|
| TRUE | TRUE | D1 | 12/07/2001 | 3342001004 | BEAVER VALLEY 1 | P | Included in baseline period of 1997 - 2002 (NUREG/CR-6928) |
| TRUE | TRUE | D1 | 01/27/2003 | 2502003002 | TURKEY POINT 3 | P | |
| TRUE | TRUE | D1 | 02/23/2006 | 3362006002 | MILLSTONE 2 | P | |
| TRUE | TRUE | D1 | 06/20/2007 | 3612007002 | SAN ONOFRE 2 | P | |
| | | | | | | | |
| Baseline Distribution for PWR LOIA (NUREG/CR-6928) | | | | | | | |
| Mean | 1.00E-02 | | | | | | |
| Alpha | 0.50 | | | | | | |
| Beta | 5.00E+01 | | | | | | |
| | | | | | | | |
| PWR Experience Since End of Baseline Period (from IEDB) | | | | | | | |
| Year | PWR rcry | LOIA Events | | | | | |
| 2003 | 61.18 | 1 | | | | | |
| 2004 | 63.23 | 0 | | | | | |
| 2005 | 62.35 | 0 | | | | | |
| 2006 | 62.22 | 1 | | | | | |
| 2007 | 62.3 | 1 | Rcry for 2007 estimated. Assumes no event in December 2007. | | | | |
| Totals | 311.28 | 3 | | | | | |
| | | | | | | | |
| Bayesian Update of Baseline with PWR Experience Over 2003 - 2007 | | | | | | | |
| Mean | 9.69E-03 | Essentially unchanged from baseline frequency | | | | | |
| | | | | | | | |
| McGuire Experience Since End of Baseline Period (from IEDB) | | | | | | | |
| | rcry | | LOIA Events | | | | |
| Year | Unit 1 | Unit 2 | Unit 1 | Unit 2 | | | |
| 1988 - 2002 | 12.13 | 12.69 | 0 | 0 | | | |
| 2003 - 2006 | 3.76 | 3.64 | 0 | 0 | | | |
| 2007 | 0.9 | 0.9 | 0 | 0 | Rcry for 2007 estimated. Assumes no event in December 2007. | | |
| | | | | | | | |
| Totals | 16.79 | 17.23 | 0 | 0 | | | |
| Totals (2003 - 2007) | 4.66 | 4.54 | 0 | 0 | | | |
| | | | | | | | |
| | | | | | | | |

| | | | | | | |
|---|---|---|---|---|---|---|
| Bayesian Update of Baseline with McGuire Experience Over 1988 - 2007 | | | | | | |
| Mean | 5.95E-03 | Combining both units | | | | |
| | | | | | | |
| Bayesian Update of Baseline with McGuire Experience Over 2003 - 2007 | | | | | | |
| Mean | 8.45E-03 | Combining both units | | | | |

# ATTACHMENT E – SPAR RUN FOR LOIA / LONSW

LOIA with LONSW

```
                                          Code  Ver : 7:27
Fam  : MCGU_3P                            Model Ver : 2008/01/31
User : IDAHO NATIONAL LABORATORY          Init Event: IE-LOIA
Ev ID: LOIA-DURING-FISH-RUN               Total CCDP:  8.0E-002
Desc : loss of all service water
```

BASIC EVENT CHANGES

| Event Name | Description | Base Prob | Curr Prob | Type |
|---|---|---|---|---|
| AFW-XHE-XM-AIR | OPERATOR FAILS TO THROTTLE A | 2.5E-001 | 2.0E-002 | |
| CVW-SYS-TM-RV | Containment ventilation cool | 1.0E-001 | 1.0E+000 | TRUE |
| IE-ISL-HPI | ISLOCA IE 2-CKV HPI interfac | 2.3E-006 | +0.0E+000 | |
| IE-ISL-LPI | ISLOCA IE 2-CKV LPI interfac | 4.6E-006 | +0.0E+000 | |
| IE-ISL-RHR | RHR pipe ruptures | 7.9E-006 | +0.0E+000 | |
| IE-LDCEVDD | Loss of DC Bus B Initiating | 1.2E-003 | +0.0E+000 | |
| IE-LLOCA | Large Loss of Coolant Accide | 2.5E-006 | +0.0E+000 | |
| IE-LOACA | Loss of vital ac Bus 1A init | 9.0E-003 | +0.0E+000 | |
| IE-LOCCW | Loss of Component Cooling Wa | 4.0E-004 | +0.0E+000 | |
| IE-LOCHS | LOSS OF CONDENSOR HEAT SIN | 8.0E-002 | +0.0E+000 | |
| IE-LOIA | LOSS OF INSTRUMENT AIR INITI | 1.0E-002 | 1.0E+000 | |
| IE-LOMFW | LOSS OF MAIN FEEDWATER | 1.0E-001 | +0.0E+000 | |
| IE-LONSR | Loss of Nuclear Service Wate | 4.0E-004 | +0.0E+000 | |
| IE-LOOP | LOSS OF OFFSITE POWER | +0.0E+000 | +0.0E+000 | |
| IE-MLOCA | MEDIUM LOCA | 2.0E-004 | +0.0E+000 | |
| IE-RXVRUPT | REACTOR VESSEL RUPTURE INIT | 1.0E-007 | +0.0E+000 | |
| IE-SGTR | STEAM GENERATOR TUBE RUPTU | 4.0E-003 | +0.0E+000 | |
| IE-SLB | STEAM LINE BREAK | 1.2E-002 | +0.0E+000 | |
| IE-SLOCA | SMALL LOCA | 6.0E-004 | +0.0E+000 | |
| IE-SORV | STUCK-OPEN PZR SAFETY VALVE | 3.0E-003 | +0.0E+000 | |
| IE-TRANS | TRANSIENT | 8.0E-001 | +0.0E+000 | |
| LONSR | LOSS OF NUCLEAR SERVICE WATE | +0.0E+000 | 1.0E+000 | TRUE |
| NSR-STR-CF-ALL | CCF OF ALL 4 NSR STRAINERS | +0.0E+000 | 1.0E+000 | TRUE |
| SSF-XHE-XM-SYSNS | OPERATOR FAILS TO START AND | 1.0E-002 | 2.2E-002 | |

SEQUENCE PROBABILITIES

Truncation : Cummulative : 100.0% Individual : 0.0%

| Event Tree Name | Sequence Name | CCDP | %Cont |
|---|---|---|---|
| LOIA | 11 | 3.7E-002 | |
| LOIA | 10 | 3.6E-002 | |
| LOIA | 02-02-13 | 7.3E-003 | |
| LOIA | 02-03-13 | 3.7E-004 | |
| LOIA | 02-04-10 | 9.1E-005 | |
| LOIA | 02-14-10 | 3.7E-005 | |

2008/03/17 15:23:07 page 1

# ATTACHMENT E – SPAR RUN FOR LOIA / LONSW

```
          SEQUENCE LOGIC
Event Tree     Sequence Name                        Logic
-------------- ------------- ---------------------------------------------------
LOIA           11            /RPS                        AFW
                              REC-IAS                    FAB

LOIA           10            /RPS                        AFW
                              REC-IAS                   /FAB
                              HPR
LOIA           02-02-13      /RPS                       /AFW
                             /PORV                       LOSC
                             /RCPT                     /RSD
                             /BP1                        BP2
                             /FW-LOCA                    HPI
                              SSC1
LOIA           02-03-13      /RPS                       /AFW
                             /PORV                       LOSC
                             /RCPT                     /RSD
                              BP1                      /BP2
                             /FW-LOCA                    HPI
                              SSC1
LOIA           02-04-10      /RPS                       /AFW
                             /PORV                       LOSC
                             /RCPT                     /RSD
                              BP1                        BP2
                              HPI                      /ACC
                             /PZR1                       LPI

LOIA           02-14-10      /RPS                       /AFW
                             /PORV                       LOSC
                              RCPT                       HPI
                             /ACC                      /PZR1
                              LPI

 Fault Tree Name          Description
------------------------- ---------------------------------------------------
 ACC                      ACCUMULATOR 3-OF-3
 AFW                      AUXILIARY FEEDWATER
 BP1                      RCP SEAL STAGE 1 INTEGRITY
 BP2                      RCP SEAL STAGE 2 INTEGRITY
 FAB                      FEED AND BLEED
 FW-LOCA                  FEEDWATER AVAILABLE MFW or AFW USING NLOCA-FTF
 HPI                      HIGH  PRESSURE INJECTION
 HPR                      HPR PRESSURE RECIRCULATION
 LOSC                     LOSS OF SEAL COOLING
 LPI                      LOW PRESSURE INJECTION
 PORV                     PORV/SRVs  ARE CLOSED


     2008/03/17                    15:23:07                      page     2
```

```
PZR1                    RCS DEPRESS FOR LPI (PORVs, etc.)
RCPT                    REACTOR COOLANT PUMPS TRIPPED
REC-IAS                 INSTRUMENT AIR SYSTEM RECOVERED
RPS                     REACTOR TRIP
RSD                     RAPID SECONDARY DEPRESS
SSC1                    RAPID SECONDARY DEPRESS
```

---

```
         SEQUENCE CUT SETS
             Truncation:  Cummulative: 100.0%  Individual:   1.0%

     Event Tree: LOIA                                    CCDP:  3.7E-002
     Sequence:   11

  CCDP       % Cut Set                      Cut Set Events
---------    ---------    ----------------------------------------------------
 1.0E-002        27.18     AFW-XHE-XM-AIR            CVC-MDP-RUNA
 1.0E-002        27.18     AFW-XHE-XM-AIR            CVC-MDP-RUNB
 3.5E-003         9.51     AFW-TDP-FS-TDP            CVC-MDP-RUNA
 3.5E-003         9.51     AFW-TDP-FS-TDP            CVC-MDP-RUNB
 2.5E-003         6.80     AFW-TDP-TM-TDP            CVC-MDP-RUNA
 2.5E-003         6.80     AFW-TDP-TM-TDP            CVC-MDP-RUNB
 2.1E-003         5.57     AFW-TDP-FR-TDP            CVC-MDP-RUNB
 2.1E-003         5.57     AFW-TDP-FR-TDP            CVC-MDP-RUNA
 4.0E-004         1.09     HPI-XHE-XM-FB             AFW-XHE-XM-AIR

     Event Tree: LOIA                                    CCDP:  3.6E-002
     Sequence:   10

  CCDP       % Cut Set                      Cut Set Events
---------    ---------    ----------------------------------------------------
 2.0E-002        55.85     AFW-XHE-XM-AIR
 7.0E-003        19.55     AFW-TDP-FS-TDP
 5.0E-003        13.96     AFW-TDP-TM-TDP
 4.1E-003        11.45     AFW-TDP-FR-TDP

     Event Tree: LOIA                                    CCDP:  7.3E-003
     Sequence:   02-02-13

  CCDP       % Cut Set                      Cut Set Events
---------    ---------    ----------------------------------------------------
 2.2E-003        30.18     RCS-MDP-LK-BP2            SSF-XHE-XM-SYSNS
                           CVC-MDP-RUNA
 2.2E-003        30.18     RCS-MDP-LK-BP2            SSF-XHE-XM-SYSNS
                           CVC-MDP-RUNB
 3.0E-004         4.12     RCS-MDP-LK-BP2            SSF-PDP-TM-SYS
                           CVC-MDP-RUNB
 3.0E-004         4.12     RCS-MDP-LK-BP2            SSF-PDP-FS-SYS
                           CVC-MDP-RUNB
 3.0E-004         4.12     RCS-MDP-LK-BP2            SSF-PDP-FS-SYS

    2008/03/17                    15:23:07                      page     3
```

```
                                CVC-MDP-RUNA
  3.0E-004          4.12        RCS-MDP-LK-BP2            SSF-PDP-TM-SYS
                                CVC-MDP-RUNA
  2.6E-004          3.55        RCS-MDP-LK-BP2            SSF-ACX-FR-SSF2
                                CVC-MDP-RUNA
  2.6E-004          3.55        RCS-MDP-LK-BP2            SSF-ACX-FR-SSF2
                                CVC-MDP-RUNB
  1.0E-004          1.37        RCS-MDP-LK-BP2            SSF-MOV-CC-842AC
                                CVC-MDP-RUNB
  1.0E-004          1.37        RCS-MDP-LK-BP2            SSF-MOV-CC-849AC
                                CVC-MDP-RUNB
  1.0E-004          1.37        RCS-MDP-LK-BP2            SSF-MOV-CC-1013C
                                CVC-MDP-RUNB
  1.0E-004          1.37        RCS-MDP-LK-BP2            SSF-XHE-XR-SYS
                                CVC-MDP-RUNB
  1.0E-004          1.37        RCS-MDP-LK-BP2            SSF-XHE-XR-SYS
                                CVC-MDP-RUNA
  1.0E-004          1.37        RCS-MDP-LK-BP2            SSF-MOV-CC-1013C
                                CVC-MDP-RUNA
  1.0E-004          1.37        RCS-MDP-LK-BP2            SSF-MOV-CC-842AC
                                CVC-MDP-RUNA
  1.0E-004          1.37        RCS-MDP-LK-BP2            SSF-MOV-CC-849AC
                                CVC-MDP-RUNA
  9.8E-005          1.34        RCS-MDP-LK-BP2            SSF-PDP-FR-SYS
                                CVC-MDP-RUNA
  9.8E-005          1.34        RCS-MDP-LK-BP2            SSF-PDP-FR-SYS
                                CVC-MDP-RUNB
  8.0E-005          1.10        RCS-MDP-LK-BP2            SSF-ACX-FS-SSF2
                                CVC-MDP-RUNB
  8.0E-005          1.10        RCS-MDP-LK-BP2            SSF-ACX-FS-SSF2
                                CVC-MDP-RUNA
      Event Tree: LOIA                                        CCDP:  3.7E-004
      Sequence:   02-03-13

   CCDP       % Cut Set                       Cut Set Events
---------    ---------    ---------------------------------------------------
  1.1E-004        30.10     RCS-MDP-LK-BP1           /RCS-MDP-LK-BP2
                            SSF-XHE-XM-SYSNS          CVC-MDP-RUNA
  1.1E-004        30.10     RCS-MDP-LK-BP1           /RCS-MDP-LK-BP2
                            SSF-XHE-XM-SYSNS          CVC-MDP-RUNB
  1.5E-005         4.10     RCS-MDP-LK-BP1           /RCS-MDP-LK-BP2
                            SSF-PDP-TM-SYS            CVC-MDP-RUNA
  1.5E-005         4.10     RCS-MDP-LK-BP1           /RCS-MDP-LK-BP2
                            SSF-PDP-FS-SYS            CVC-MDP-RUNB
  1.5E-005         4.10     RCS-MDP-LK-BP1           /RCS-MDP-LK-BP2
                            SSF-PDP-TM-SYS            CVC-MDP-RUNB
  1.5E-005         4.10     RCS-MDP-LK-BP1           /RCS-MDP-LK-BP2
                            SSF-PDP-FS-SYS            CVC-MDP-RUNA
  1.3E-005         3.54     RCS-MDP-LK-BP1           /RCS-MDP-LK-BP2
                            SSF-ACX-FR-SSF2           CVC-MDP-RUNB
  1.3E-005         3.54     RCS-MDP-LK-BP1           /RCS-MDP-LK-BP2


     2008/03/17                    15:23:07                      page     4
```

| | | | |
|---|---|---|---|
| | | SSF-ACX-FR-SSF2 | CVC-MDP-RUNA |
| 5.0E-006 | 1.37 | RCS-MDP-LK-BP1 | /RCS-MDP-LK-BP2 |
| | | SSF-MOV-CC-1013C | CVC-MDP-RUNA |
| 5.0E-006 | 1.37 | RCS-MDP-LK-BP1 | /RCS-MDP-LK-BP2 |
| | | SSF-XHE-XR-SYS | CVC-MDP-RUNB |
| 5.0E-006 | 1.37 | RCS-MDP-LK-BP1 | /RCS-MDP-LK-BP2 |
| | | SSF-MOV-CC-1013C | CVC-MDP-RUNB |
| 5.0E-006 | 1.37 | RCS-MDP-LK-BP1 | /RCS-MDP-LK-BP2 |
| | | SSF-MOV-CC-849AC | CVC-MDP-RUNA |
| 5.0E-006 | 1.37 | RCS-MDP-LK-BP1 | /RCS-MDP-LK-BP2 |
| | | SSF-XHE-XR-SYS | CVC-MDP-RUNA |
| 5.0E-006 | 1.37 | RCS-MDP-LK-BP1 | /RCS-MDP-LK-BP2 |
| | | SSF-MOV-CC-842AC | CVC-MDP-RUNB |
| 5.0E-006 | 1.37 | RCS-MDP-LK-BP1 | /RCS-MDP-LK-BP2 |
| | | SSF-MOV-CC-842AC | CVC-MDP-RUNA |
| 5.0E-006 | 1.37 | RCS-MDP-LK-BP1 | /RCS-MDP-LK-BP2 |
| | | SSF-MOV-CC-849AC | CVC-MDP-RUNB |
| 4.9E-006 | 1.33 | RCS-MDP-LK-BP1 | /RCS-MDP-LK-BP2 |
| | | SSF-PDP-FR-SYS | CVC-MDP-RUNA |
| 4.9E-006 | 1.33 | RCS-MDP-LK-BP1 | /RCS-MDP-LK-BP2 |
| | | SSF-PDP-FR-SYS | CVC-MDP-RUNB |
| 4.0E-006 | 1.09 | RCS-MDP-LK-BP1 | /RCS-MDP-LK-BP2 |
| | | SSF-ACX-FS-SSF2 | CVC-MDP-RUNB |
| 4.0E-006 | 1.09 | RCS-MDP-LK-BP1 | /RCS-MDP-LK-BP2 |
| | | SSF-ACX-FS-SSF2 | CVC-MDP-RUNA |

Event Tree: LOIA CCDP: 9.1E-005
Sequence: 02-04-10

| CCDP | % Cut Set | Cut Set Events | |
|---|---|---|---|
| 2.8E-005 | 30.09 | RCS-MDP-LK-BP1 | RCS-MDP-LK-BP2 |
| | | SSF-XHE-XM-SYSNS | CVC-MDP-RUNA |
| 2.8E-005 | 30.09 | RCS-MDP-LK-BP1 | RCS-MDP-LK-BP2 |
| | | SSF-XHE-XM-SYSNS | CVC-MDP-RUNB |
| 3.8E-006 | 4.10 | RCS-MDP-LK-BP1 | RCS-MDP-LK-BP2 |
| | | SSF-PDP-TM-SYS | CVC-MDP-RUNB |
| 3.8E-006 | 4.10 | RCS-MDP-LK-BP1 | RCS-MDP-LK-BP2 |
| | | SSF-PDP-FS-SYS | CVC-MDP-RUNB |
| 3.8E-006 | 4.10 | RCS-MDP-LK-BP1 | RCS-MDP-LK-BP2 |
| | | SSF-PDP-TM-SYS | CVC-MDP-RUNA |
| 3.8E-006 | 4.10 | RCS-MDP-LK-BP1 | RCS-MDP-LK-BP2 |
| | | SSF-PDP-FS-SYS | CVC-MDP-RUNA |
| 3.2E-006 | 3.54 | RCS-MDP-LK-BP1 | RCS-MDP-LK-BP2 |
| | | SSF-ACX-FR-SSF2 | CVC-MDP-RUNA |
| 3.2E-006 | 3.54 | RCS-MDP-LK-BP1 | RCS-MDP-LK-BP2 |
| | | SSF-ACX-FR-SSF2 | CVC-MDP-RUNB |
| 1.3E-006 | 1.37 | RCS-MDP-LK-BP1 | RCS-MDP-LK-BP2 |
| | | SSF-MOV-CC-842AC | CVC-MDP-RUNA |
| 1.3E-006 | 1.37 | RCS-MDP-LK-BP1 | RCS-MDP-LK-BP2 |
| | | SSF-MOV-CC-849AC | CVC-MDP-RUNA |
| 1.3E-006 | 1.37 | RCS-MDP-LK-BP1 | RCS-MDP-LK-BP2 |

2008/03/17 15:23:07 page 5

| | | | |
|---|---|---|---|
| | | SSF-MOV-CC-1013C | CVC-MDP-RUNA |
| 1.3E-006 | 1.37 | RCS-MDP-LK-BP1 | RCS-MDP-LK-BP2 |
| | | SSF-MOV-CC-842AC | CVC-MDP-RUNB |
| 1.3E-006 | 1.37 | RCS-MDP-LK-BP1 | RCS-MDP-LK-BP2 |
| | | SSF-MOV-CC-849AC | CVC-MDP-RUNB |
| 1.3E-006 | 1.37 | RCS-MDP-LK-BP1 | RCS-MDP-LK-BP2 |
| | | SSF-XHE-XR-SYS | CVC-MDP-RUNA |
| 1.3E-006 | 1.37 | RCS-MDP-LK-BP1 | RCS-MDP-LK-BP2 |
| | | SSF-XHE-XR-SYS | CVC-MDP-RUNB |
| 1.3E-006 | 1.37 | RCS-MDP-LK-BP1 | RCS-MDP-LK-BP2 |
| | | SSF-MOV-CC-1013C | CVC-MDP-RUNB |
| 1.2E-006 | 1.33 | RCS-MDP-LK-BP1 | RCS-MDP-LK-BP2 |
| | | SSF-PDP-FR-SYS | CVC-MDP-RUNB |
| 1.2E-006 | 1.33 | RCS-MDP-LK-BP1 | RCS-MDP-LK-BP2 |
| | | SSF-PDP-FR-SYS | CVC-MDP-RUNA |
| 1.0E-006 | 1.09 | RCS-MDP-LK-BP1 | RCS-MDP-LK-BP2 |
| | | SSF-ACX-FS-SSF2 | CVC-MDP-RUNB |
| 1.0E-006 | 1.09 | RCS-MDP-LK-BP1 | RCS-MDP-LK-BP2 |
| | | SSF-ACX-FS-SSF2 | CVC-MDP-RUNA |

Event Tree: LOIA CCDP: 3.7E-005
Sequence: 02-14-10

| CCDP | % Cut Set | Cut Set Events | |
|---|---|---|---|
| 1.1E-005 | 30.09 | SSF-XHE-XM-SYSNS | RCS-XHE-XM-TRIP |
| | | CVC-MDP-RUNA | |
| 1.1E-005 | 30.09 | SSF-XHE-XM-SYSNS | RCS-XHE-XM-TRIP |
| | | CVC-MDP-RUNB | |
| 1.5E-006 | 4.10 | SSF-PDP-TM-SYS | RCS-XHE-XM-TRIP |
| | | CVC-MDP-RUNB | |
| 1.5E-006 | 4.10 | SSF-PDP-FS-SYS | RCS-XHE-XM-TRIP |
| | | CVC-MDP-RUNB | |
| 1.5E-006 | 4.10 | SSF-PDP-TM-SYS | RCS-XHE-XM-TRIP |
| | | CVC-MDP-RUNA | |
| 1.5E-006 | 4.10 | SSF-PDP-FS-SYS | RCS-XHE-XM-TRIP |
| | | CVC-MDP-RUNA | |
| 1.3E-006 | 3.54 | SSF-ACX-FR-SSF2 | RCS-XHE-XM-TRIP |
| | | CVC-MDP-RUNA | |
| 1.3E-006 | 3.54 | SSF-ACX-FR-SSF2 | RCS-XHE-XM-TRIP |
| | | CVC-MDP-RUNB | |
| 5.0E-007 | 1.37 | SSF-MOV-CC-842AC | RCS-XHE-XM-TRIP |
| | | CVC-MDP-RUNA | |
| 5.0E-007 | 1.37 | SSF-MOV-CC-849AC | RCS-XHE-XM-TRIP |
| | | CVC-MDP-RUNA | |
| 5.0E-007 | 1.37 | SSF-MOV-CC-1013C | RCS-XHE-XM-TRIP |
| | | CVC-MDP-RUNA | |
| 5.0E-007 | 1.37 | SSF-MOV-CC-842AC | RCS-XHE-XM-TRIP |
| | | CVC-MDP-RUNB | |
| 5.0E-007 | 1.37 | SSF-MOV-CC-849AC | RCS-XHE-XM-TRIP |
| | | CVC-MDP-RUNB | |
| 5.0E-007 | 1.37 | SSF-XHE-XR-SYS | RCS-XHE-XM-TRIP |

2008/03/17 15:23:07 page 6

| | | | |
|---|---|---|---|
| | | CVC-MDP-RUNA | |
| 5.0E-007 | 1.37 | SSF-XHE-XR-SYS | RCS-XHE-XM-TRIP |
| | | CVC-MDP-RUNB | |
| 5.0E-007 | 1.37 | SSF-MOV-CC-1013C | RCS-XHE-XM-TRIP |
| | | CVC-MDP-RUNB | |
| 4.9E-007 | 1.33 | SSF-PDP-FR-SYS | RCS-XHE-XM-TRIP |
| | | CVC-MDP-RUNB | |
| 4.9E-007 | 1.33 | SSF-PDP-FR-SYS | RCS-XHE-XM-TRIP |
| | | CVC-MDP-RUNA | |
| 4.0E-007 | 1.09 | SSF-ACX-FS-SSF2 | RCS-XHE-XM-TRIP |
| | | CVC-MDP-RUNB | |
| 4.0E-007 | 1.09 | SSF-ACX-FS-SSF2 | RCS-XHE-XM-TRIP |
| | | CVC-MDP-RUNA | |

BASIC EVENTS (Cut Sets Only)

| Event Name | Description | Curr Prob |
|---|---|---|
| AFW-TDP-FR-TDP | AFW TURBINE DRIVEN PUMP FAILS TO RUN | 4.1E-003 |
| AFW-TDP-FS-TDP | AFW TURBINE DRIVEN PUMP FAILS TO START | 7.0E-003 |
| AFW-TDP-TM-TDP | AFW TDP UNAVAILABLE DUE TO TEST AND MAINTENAN | 5.0E-003 |
| AFW-XHE-XM-AIR | OPERATOR FAILS TO THROTTLE AND CONTROL TDP - | 2.0E-002 |
| CVC-MDP-RUNA | FRACTION OF TIME CVC MDP TRAIN A IS RUNNING | 5.0E-001 |
| CVC-MDP-RUNB | FRACTION OF TIME CVC MDP TRAIN B IS RUNNING | 5.0E-001 |
| HPI-XHE-XM-FB | OPERATOR FAILS TO INITIATE FEED AND BLEED COO | 2.0E-002 |
| RCS-MDP-LK-BP1 | RCP SEAL STAGE 1 INTEGRITY (BINDING/POPPI NG | 1.3E-002 |
| RCS-MDP-LK-BP2 | RCP SEAL STAGE 2 INTEGRITY (BINDING/POPPI NG | 2.0E-001 |
| RCS-XHE-XM-TRIP | OPERATOR FAILS TO TRIP RCPS FOLLOWING LOSS OF | 1.0E-003 |
| SSF-ACX-FR-SSF2 | FAILURE OF SSF AHU FAN #2 TO RUN | 2.6E-003 |
| SSF-ACX-FS-SSF2 | FAILURE OF SSF AHU FAN #2 TO START | 8.0E-004 |
| SSF-MOV-CC-1013C | FAILURE OF SSF MAKE-UP PDP TRAIN DISCH MOV 10 | 1.0E-003 |
| SSF-MOV-CC-842AC | FAILURE OF SSF MAKE-UP PDP TRAIN SUCTION MOV | 1.0E-003 |
| SSF-MOV-CC-849AC | FAILURE OF SSF MAKE-UP PDP TRAIN DISCH MOV 84 | 1.0E-003 |
| SSF-PDP-FR-SYS | FAILURE OF SSF MAKE-UP PDP TRAIN TO RUN | 9.8E-004 |
| SSF-PDP-FS-SYS | FAILURE OF SSF MAKE-UP PDP TRAIN TO START | 3.0E-003 |
| SSF-PDP-TM-SYS | SSF PDP SYSTEM UNAVAILABLE DUE TO TEST AND MA | 3.0E-003 |
| SSF-XHE-XM-SYSNS | OPERATOR FAILS TO START AND ALIGN SSF DURING | 2.2E-002 |
| SSF-XHE-XR-SYS | OPERATOR FAILS TO RESTORE SSF PDP AFTER T & M | 1.0E-003 |

# ATTACHMENT F – SPAR RUN FOR LOIA WITH LOSS OF A TRAIN OF NSW

LOIA with Loss of 'A' Train on NSW

```
                                          Code  Ver : 7:27
Fam  : MCGU_3P                            Model Ver : 2008/06/18
User : IDAHO NATIONAL LABORATORY          Init Event: <PASS>
Ev ID: LOIA-FISH-A-TRAIN-SW               Total CCDP:  1.0E-003
Desc : Initiating Event Assessment
```

BASIC EVENT CHANGES

| Event Name | Description | Base Prob | Curr Prob | Type |
|---|---|---|---|---|
| AFW-XHE-XM-AIR | OPERATOR FAILS TO THROTTLE A | 2.5E-001 | 2.0E-002 | |
| CVW-SYS-TM-RV | Containment ventilation cool | 1.0E-001 | 1.0E+000 | TRUE |
| IE-ISL-HPI | ISLOCA IE 2-CKV HPI interfac | 2.3E-006 | +0.0E+000 | |
| IE-ISL-LPI | ISLOCA IE 2-CKV LPI interfac | 4.6E-006 | +0.0E+000 | |
| IE-ISL-RHR | RHR pipe ruptures | 4.0E-006 | +0.0E+000 | |
| IE-LDCEVDD | Loss of DC Bus B Initiating | 1.2E-003 | +0.0E+000 | |
| IE-LLOCA | Large Loss of Coolant Accide | 2.5E-006 | +0.0E+000 | |
| IE-LOACA | Loss of vital ac Bus 1A init | 9.0E-003 | +0.0E+000 | |
| IE-LOCCW | Loss of Component Cooling Wa | 4.0E-004 | +0.0E+000 | |
| IE-LOCHS | LOSS OF CONDENSOR HEAT SIN | 8.0E-002 | +0.0E+000 | |
| IE-LOIA | LOSS OF INSTRUMENT AIR INITI | 1.0E-002 | 1.0E+000 | |
| IE-LOMFW | LOSS OF MAIN FEEDWATER | 1.0E-001 | +0.0E+000 | |
| IE-LONSR | Loss of Nuclear Service Wate | 4.0E-004 | +0.0E+000 | |
| IE-LOOP | LOSS OF OFFSITE POWER | +0.0E+000 | +0.0E+000 | |
| IE-MLOCA | MEDIUM LOCA | 2.0E-004 | +0.0E+000 | |
| IE-RXVRUPT | REACTOR VESSEL RUPTURE INIT | 1.0E-007 | +0.0E+000 | |
| IE-SGTR | STEAM GENERATOR TUBE RUPTU | 4.0E-003 | +0.0E+000 | |
| IE-SLB | STEAM LINE BREAK | 1.2E-002 | +0.0E+000 | |
| IE-SLOCA | SMALL LOCA | 6.0E-004 | +0.0E+000 | |
| IE-SORV | STUCK-OPEN PZR SAFETY VALVE | 3.0E-003 | +0.0E+000 | |
| IE-TRANS | TRANSIENT | 8.0E-001 | +0.0E+000 | |
| NSR-STR-CF-ALL | CCF OF ALL 4 NSR STRAINERS | +0.0E+000 | 4.0E-006 | |
| NSR-STR-CF-UN1 | CCF OF ALL UNIT 1 NSR STRAIN | +0.0E+000 | 1.7E-005 | |
| NSR-STR-PG-1A | FAILURE OF NSR MDP-1A STRAIN | 1.7E-004 | 1.0E+000 | TRUE |
| NSR-STR-PG-2A | FAILURE OF NSR MDP-2A STRAIN | 1.7E-004 | 1.0E+000 | TRUE |
| NSR-XHE-XL-NSRSYS | FAILURE TO RECOVER FROM A LO | 4.0E-002 | 1.0E+000 | TRUE |

---

SEQUENCE PROBABILITIES

Truncation : Cummulative : 100.0% Individual : 0.0%

| Event Tree Name | Sequence Name | CCDP | %Cont |
|---|---|---|---|
| LOIA | 11 | 5.2E-004 | |
| LOIA | 10 | 5.0E-004 | |
| LOIA | 02-02-13 | 4.6E-006 | |
| LOIA | 02-03-13 | 2.3E-007 | |
| LOIA | 12-14 | 1.8E-007 | |

2008/06/19 09:59:08 page 1

SEQUENCE LOGIC

| Event Tree | Sequence Name | Logic | |
|---|---|---|---|
| LOIA | 11 | /RPS | AFW |
| | | REC-IAS | FAB |
| LOIA | 10 | /RPS | AFW |
| | | REC-IAS | /FAB |
| | | HPR | |
| LOIA | 02-02-13 | /RPS | /AFW |
| | | /PORV | LOSC |
| | | /RCPT | /RSD |
| | | /BP1 | BP2 |
| | | /FW-LOCA | HPI |
| | | SSC1 | |
| LOIA | 02-03-13 | /RPS | /AFW |
| | | /PORV | LOSC |
| | | /RCPT | /RSD |
| | | BP1 | /BP2 |
| | | /FW-LOCA | HPI |
| | | SSC1 | |
| LOIA | 12-14 | RPS | /RCSPRESS |
| | | MFW | /AFW-A |
| | | BORATION | |

| Fault Tree Name | Description |
|---|---|
| AFW | AUXILIARY FEEDWATER AVAILABLE |
| AFW-A | AUXILIARY FEEDWATER |
| BORATION | EMERGENCY BORATION |
| BP1 | RCP SEAL STAGE 1 INTEGRITY |
| BP2 | RCP SEAL STAGE 2 INTEGRITY |
| FAB | FEED AND BLEED |
| FW-LOCA | Developed Event |
| HPI | HIGH PRESSURE INJECTION |
| HPR | SUMP RECIRC |
| LOSC | LOSS OF REAL COOLING |
| MFW | MAIN FEEDWATER |
| PORV | PORV/SRVs ARE CLOSED |
| RCPT | REACTOR COOLANT PUMPS TRIPPED |
| RCSPRESS | RCS PRESSURE LIMITED |
| REC-IAS | INSTRUMENT AIR SYSTEM RECOVERED |
| RPS | REACTOR PROTECTION SYSTEM |
| RSD | RAPID SECONDARY DEPRESS |
| SSC1 | RAPID SECONDARY DEPRESS |

2008/06/19 09:59:08 page 2

SEQUENCE CUT SETS

Truncation: Cummulative: 100.0% Individual: 1.0%

Event Tree: LOIA CCDP: 5.2E-004
Sequence: 11

| CCDP | % Cut Set | Cut Set Events | |
|---|---|---|---|
| 1.2E-004 | 23.13 | AFW-XHE-XM-AIR | NSR-MDP-TM-1B |
| | | NSR-MDP-RUNA | CVC-MDP-RUNB |
| 1.2E-004 | 23.13 | AFW-XHE-XM-AIR | NSR-MDP-TM-1B |
| | | NSR-MDP-RUNA | CVC-MDP-RUNA |
| 4.2E-005 | 8.09 | AFW-TDP-FS-TDP | NSR-MDP-TM-1B |
| | | NSR-MDP-RUNA | CVC-MDP-RUNA |
| 4.2E-005 | 8.09 | AFW-TDP-FS-TDP | NSR-MDP-TM-1B |
| | | NSR-MDP-RUNA | CVC-MDP-RUNB |
| 3.0E-005 | 5.78 | AFW-TDP-TM-TDP | NSR-MDP-TM-1B |
| | | NSR-MDP-RUNA | CVC-MDP-RUNB |
| 3.0E-005 | 5.78 | AFW-TDP-TM-TDP | NSR-MDP-TM-1B |
| | | NSR-MDP-RUNA | CVC-MDP-RUNA |
| 2.5E-005 | 4.75 | AFW-TDP-FR-TDP | NSR-MDP-TM-1B |
| | | NSR-MDP-RUNA | CVC-MDP-RUNB |
| 2.5E-005 | 4.75 | AFW-TDP-FR-TDP | NSR-MDP-TM-1B |
| | | NSR-MDP-RUNA | CVC-MDP-RUNA |
| 1.0E-005 | 1.93 | AFW-XHE-XM-AIR | NSR-MDP-FS-1B |
| | | NSR-MDP-RUNA | CVC-MDP-RUNB |
| 1.0E-005 | 1.93 | AFW-XHE-XM-AIR | NSR-MDP-FS-1B |
| | | NSR-MDP-RUNA | CVC-MDP-RUNA |

Event Tree: LOIA CCDP: 5.0E-004
Sequence: 10

| CCDP | % Cut Set | Cut Set Events | |
|---|---|---|---|
| 2.4E-004 | 47.71 | AFW-XHE-XM-AIR | NSR-MDP-TM-1B |
| | | NSR-MDP-RUNA | |
| 8.4E-005 | 16.70 | AFW-TDP-FS-TDP | NSR-MDP-TM-1B |
| | | NSR-MDP-RUNA | |
| 6.0E-005 | 11.93 | AFW-TDP-TM-TDP | NSR-MDP-TM-1B |
| | | NSR-MDP-RUNA | |
| 4.9E-005 | 9.79 | AFW-TDP-FR-TDP | NSR-MDP-TM-1B |
| | | NSR-MDP-RUNA | |
| 2.0E-005 | 3.98 | AFW-XHE-XM-AIR | NSR-MDP-FS-1B |
| | | NSR-MDP-RUNA | |
| 1.0E-005 | 1.99 | AFW-XHE-XM-AIR | NSR-XHE-XR-MDP1B |
| | | NSR-MDP-RUNA | |
| 7.0E-006 | 1.39 | AFW-TDP-FS-TDP | NSR-MDP-FS-1B |
| | | NSR-MDP-RUNA | |

2008/06/19 09:59:08 page 3

Event Tree: LOIA CCDP: 4.6E-006
Sequence: 02-02-13

| CCDP | % Cut Set | Cut Set Events | |
|---|---|---|---|
| 3.6E-007 | 7.75 | RCS-MDP-LK-BP2 | SSF-PDP-FS-SYS |
| | | NSR-MDP-TM-1B | NSR-MDP-RUNA |
| | | CVC-MDP-RUNA | NSR-XHE-XL-NSRSYSL |
| 3.6E-007 | 7.75 | RCS-MDP-LK-BP2 | SSF-PDP-TM-SYS |
| | | NSR-MDP-TM-1B | NSR-MDP-RUNA |
| | | CVC-MDP-RUNB | NSR-XHE-XL-NSRSYSL |
| 3.6E-007 | 7.75 | RCS-MDP-LK-BP2 | SSF-PDP-FS-SYS |
| | | NSR-MDP-TM-1B | NSR-MDP-RUNA |
| | | CVC-MDP-RUNB | NSR-XHE-XL-NSRSYSL |
| 3.6E-007 | 7.75 | RCS-MDP-LK-BP2 | SSF-PDP-TM-SYS |
| | | NSR-MDP-TM-1B | NSR-MDP-RUNA |
| | | CVC-MDP-RUNA | NSR-XHE-XL-NSRSYSL |
| 3.1E-007 | 6.69 | RCS-MDP-LK-BP2 | SSF-ACX-FR-SSF2 |
| | | NSR-MDP-TM-1B | NSR-MDP-RUNA |
| | | CVC-MDP-RUNB | NSR-XHE-XL-NSRSYSL |
| 3.1E-007 | 6.69 | RCS-MDP-LK-BP2 | SSF-ACX-FR-SSF2 |
| | | NSR-MDP-TM-1B | NSR-MDP-RUNA |
| | | CVC-MDP-RUNA | NSR-XHE-XL-NSRSYSL |
| 1.2E-007 | 2.58 | RCS-MDP-LK-BP2 | SSF-MOV-CC-1013C |
| | | NSR-MDP-TM-1B | NSR-MDP-RUNA |
| | | CVC-MDP-RUNB | NSR-XHE-XL-NSRSYSL |
| 1.2E-007 | 2.58 | RCS-MDP-LK-BP2 | SSF-XHE-XR-SYS |
| | | NSR-MDP-TM-1B | NSR-MDP-RUNA |
| | | CVC-MDP-RUNA | NSR-XHE-XL-NSRSYSL |
| 1.2E-007 | 2.58 | RCS-MDP-LK-BP2 | SSF-MOV-CC-842AC |
| | | NSR-MDP-TM-1B | NSR-MDP-RUNA |
| | | CVC-MDP-RUNA | NSR-XHE-XL-NSRSYSL |
| 1.2E-007 | 2.58 | RCS-MDP-LK-BP2 | SSF-XHE-XR-SYS |
| | | NSR-MDP-TM-1B | NSR-MDP-RUNA |
| | | CVC-MDP-RUNB | NSR-XHE-XL-NSRSYSL |
| 1.2E-007 | 2.58 | RCS-MDP-LK-BP2 | SSF-MOV-CC-1013C |
| | | NSR-MDP-TM-1B | NSR-MDP-RUNA |
| | | CVC-MDP-RUNA | NSR-XHE-XL-NSRSYSL |
| 1.2E-007 | 2.58 | RCS-MDP-LK-BP2 | SSF-MOV-CC-842AC |
| | | NSR-MDP-TM-1B | NSR-MDP-RUNA |
| | | CVC-MDP-RUNB | NSR-XHE-XL-NSRSYSL |
| 1.2E-007 | 2.58 | RCS-MDP-LK-BP2 | SSF-MOV-CC-849AC |
| | | NSR-MDP-TM-1B | NSR-MDP-RUNA |
| | | CVC-MDP-RUNA | NSR-XHE-XL-NSRSYSL |
| 1.2E-007 | 2.58 | RCS-MDP-LK-BP2 | SSF-MOV-CC-849AC |
| | | NSR-MDP-TM-1B | NSR-MDP-RUNA |
| | | CVC-MDP-RUNB | NSR-XHE-XL-NSRSYSL |
| 1.2E-007 | 2.52 | RCS-MDP-LK-BP2 | SSF-PDP-FR-SYS |
| | | NSR-MDP-TM-1B | NSR-MDP-RUNA |
| | | CVC-MDP-RUNB | NSR-XHE-XL-NSRSYSL |
| 1.2E-007 | 2.52 | RCS-MDP-LK-BP2 | SSF-PDP-FR-SYS |

2008/06/19 09:59:08 page 4

```
                                NSR-MDP-TM-1B              NSR-MDP-RUNA
                                CVC-MDP-RUNA               NSR-XHE-XL-NSRSYSL
  9.6E-008          2.07        RCS-MDP-LK-BP2             SSF-ACX-FS-SSF2
                                NSR-MDP-TM-1B              NSR-MDP-RUNA
                                CVC-MDP-RUNA               NSR-XHE-XL-NSRSYSL
  9.6E-008          2.07        RCS-MDP-LK-BP2             SSF-ACX-FS-SSF2
                                NSR-MDP-TM-1B              NSR-MDP-RUNA
                                CVC-MDP-RUNB               NSR-XHE-XL-NSRSYSL

      Event Tree: LOIA                                         CCDP:  2.3E-007
      Sequence:   02-03-13

   CCDP        % Cut Set                        Cut Set Events
---------     ---------     ----------------------------------------------------
  1.8E-008          7.75        RCS-MDP-LK-BP1            /RCS-MDP-LK-BP2
                                SSF-PDP-FS-SYS             NSR-MDP-TM-1B
                                NSR-MDP-RUNA               CVC-MDP-RUNA
                                NSR-XHE-XL-NSRSYSL
  1.8E-008          7.75        RCS-MDP-LK-BP1            /RCS-MDP-LK-BP2
                                SSF-PDP-TM-SYS             NSR-MDP-TM-1B
                                NSR-MDP-RUNA               CVC-MDP-RUNB
                                NSR-XHE-XL-NSRSYSL
  1.8E-008          7.75        RCS-MDP-LK-BP1            /RCS-MDP-LK-BP2
                                SSF-PDP-TM-SYS             NSR-MDP-TM-1B
                                NSR-MDP-RUNA               CVC-MDP-RUNA
                                NSR-XHE-XL-NSRSYSL
  1.8E-008          7.75        RCS-MDP-LK-BP1            /RCS-MDP-LK-BP2
                                SSF-PDP-FS-SYS             NSR-MDP-TM-1B
                                NSR-MDP-RUNA               CVC-MDP-RUNB
                                NSR-XHE-XL-NSRSYSL
  1.6E-008          6.69        RCS-MDP-LK-BP1            /RCS-MDP-LK-BP2
                                SSF-ACX-FR-SSF2            NSR-MDP-TM-1B
                                NSR-MDP-RUNA               CVC-MDP-RUNA
                                NSR-XHE-XL-NSRSYSL
  1.6E-008          6.69        RCS-MDP-LK-BP1            /RCS-MDP-LK-BP2
                                SSF-ACX-FR-SSF2            NSR-MDP-TM-1B
                                NSR-MDP-RUNA               CVC-MDP-RUNB
                                NSR-XHE-XL-NSRSYSL
  6.0E-009          2.58        RCS-MDP-LK-BP1            /RCS-MDP-LK-BP2
                                SSF-MOV-CC-849AC           NSR-MDP-TM-1B
                                NSR-MDP-RUNA               CVC-MDP-RUNA
                                NSR-XHE-XL-NSRSYSL
  6.0E-009          2.58        RCS-MDP-LK-BP1            /RCS-MDP-LK-BP2
                                SSF-MOV-CC-842AC           NSR-MDP-TM-1B
                                NSR-MDP-RUNA               CVC-MDP-RUNA
                                NSR-XHE-XL-NSRSYSL
  6.0E-009          2.58        RCS-MDP-LK-BP1            /RCS-MDP-LK-BP2
                                SSF-XHE-XR-SYS             NSR-MDP-TM-1B
                                NSR-MDP-RUNA               CVC-MDP-RUNB
                                NSR-XHE-XL-NSRSYSL
  6.0E-009          2.58        RCS-MDP-LK-BP1            /RCS-MDP-LK-BP2
                                SSF-MOV-CC-1013C           NSR-MDP-TM-1B

     2008/06/19                    09:59:08                      page     5
```

```
                                NSR-MDP-RUNA              CVC-MDP-RUNA
                                NSR-XHE-XL-NSRSYSL
  6.0E-009         2.58         RCS-MDP-LK-BP1           /RCS-MDP-LK-BP2
                                SSF-XHE-XR-SYS            NSR-MDP-TM-1B
                                NSR-MDP-RUNA              CVC-MDP-RUNA
                                NSR-XHE-XL-NSRSYSL
  6.0E-009         2.58         RCS-MDP-LK-BP1           /RCS-MDP-LK-BP2
                                SSF-MOV-CC-1013C          NSR-MDP-TM-1B
                                NSR-MDP-RUNA              CVC-MDP-RUNB
                                NSR-XHE-XL-NSRSYSL
  6.0E-009         2.58         RCS-MDP-LK-BP1           /RCS-MDP-LK-BP2
                                SSF-MOV-CC-849AC          NSR-MDP-TM-1B
                                NSR-MDP-RUNA              CVC-MDP-RUNB
                                NSR-XHE-XL-NSRSYSL
  6.0E-009         2.58         RCS-MDP-LK-BP1           /RCS-MDP-LK-BP2
                                SSF-MOV-CC-842AC          NSR-MDP-TM-1B
                                NSR-MDP-RUNA              CVC-MDP-RUNB
                                NSR-XHE-XL-NSRSYSL
  5.9E-009         2.52         RCS-MDP-LK-BP1           /RCS-MDP-LK-BP2
                                SSF-PDP-FR-SYS            NSR-MDP-TM-1B
                                NSR-MDP-RUNA              CVC-MDP-RUNB
                                NSR-XHE-XL-NSRSYSL
  5.9E-009         2.52         RCS-MDP-LK-BP1           /RCS-MDP-LK-BP2
                                SSF-PDP-FR-SYS            NSR-MDP-TM-1B
                                NSR-MDP-RUNA              CVC-MDP-RUNA
                                NSR-XHE-XL-NSRSYSL
  4.8E-009         2.07         RCS-MDP-LK-BP1           /RCS-MDP-LK-BP2
                                SSF-ACX-FS-SSF2           NSR-MDP-TM-1B
                                NSR-MDP-RUNA              CVC-MDP-RUNA
                                NSR-XHE-XL-NSRSYSL
  4.8E-009         2.07         RCS-MDP-LK-BP1           /RCS-MDP-LK-BP2
                                SSF-ACX-FS-SSF2           NSR-MDP-TM-1B
                                NSR-MDP-RUNA              CVC-MDP-RUNB
                                NSR-XHE-XL-NSRSYSL

      Event Tree: LOIA                                        CCDP:  1.8E-007
      Sequence:   12-14

   CCDP       % Cut Set                      Cut Set Events
---------    ---------    ---------------------------------------------------
  3.2E-008        17.66     CVC-XHE-XM-BOR            RPS-BME-CF-RTBAB
  2.7E-008        14.73     CVC-XHE-XM-BOR            RPS-TXX-CF-6OF8
                           /RPS-CCP-TM-CHA            RPS-XHE-XE-NSGNL
  2.4E-008        13.27     CVC-XHE-XM-BOR            RPS-ROD-CF-RCCAS
  1.8E-008         9.99     CVC-XHE-XM-BOR           /RPS-CCP-TM-CHA
                            RPS-CCX-CF-6OF8           RPS-XHE-XE-NSGNL
  9.7E-009         5.30     RPS-BME-CF-RTBAB          NSR-MDP-TM-1B
                            NSR-MDP-RUNA              CVC-MDP-RUNB
  9.7E-009         5.30     RPS-BME-CF-RTBAB          NSR-MDP-TM-1B
                            NSR-MDP-RUNA              CVC-MDP-RUNA
  8.1E-009         4.42     RPS-TXX-CF-6OF8          /RPS-CCP-TM-CHA
                            RPS-XHE-XE-NSGNL          NSR-MDP-TM-1B

     2008/06/19                    09:59:08                      page     6
```

```
                                NSR-MDP-RUNA              CVC-MDP-RUNA
  8.1E-009          4.42        RPS-TXX-CF-6OF8          /RPS-CCP-TM-CHA
                                RPS-XHE-XE-NSGNL          NSR-MDP-TM-1B
                                NSR-MDP-RUNA              CVC-MDP-RUNB
  7.3E-009          3.98        RPS-ROD-CF-RCCAS          NSR-MDP-TM-1B
                                NSR-MDP-RUNA              CVC-MDP-RUNA
  7.3E-009          3.98        RPS-ROD-CF-RCCAS          NSR-MDP-TM-1B
                                NSR-MDP-RUNA              CVC-MDP-RUNB
  5.5E-009          3.00       /RPS-CCP-TM-CHA            RPS-CCX-CF-6OF8
                                RPS-XHE-XE-NSGNL          NSR-MDP-TM-1B
                                NSR-MDP-RUNA              CVC-MDP-RUNB
  5.5E-009          3.00       /RPS-CCP-TM-CHA            RPS-CCX-CF-6OF8
                                RPS-XHE-XE-NSGNL          NSR-MDP-TM-1B
                                NSR-MDP-RUNA              CVC-MDP-RUNA
  2.1E-009          1.14        CVC-XHE-XM-BOR            RPS-UVL-CF-UVDAB
                                RPS-XHE-XE-SIGNL
```

---

BASIC EVENTS (Cut Sets Only)

| Event Name | Description | Curr Prob |
|---|---|---|
| AFW-TDP-FR-TDP | AFW TURBINE DRIVEN PUMP FAILS TO RUN | 4.1E-003 |
| AFW-TDP-FS-TDP | AFW TURBINE DRIVEN PUMP FAILS TO START | 7.0E-003 |
| AFW-TDP-TM-TDP | AFW TDP UNAVAILABLE DUE TO TEST AND MAINTENAN | 5.0E-003 |
| AFW-XHE-XM-AIR | OPERATOR FAILS TO THROTTLE AND CONTROL TDP - | 2.0E-002 |
| CVC-MDP-RUNA | FRACTION OF TIME CVC MDP TRAIN A IS RUNNING | 5.0E-001 |
| CVC-MDP-RUNB | FRACTION OF TIME CVC MDP TRAIN B IS RUNNING | 5.0E-001 |
| CVC-XHE-XM-BOR | OPERATOR FAILS TO INITIATE EMERGENCY BORATION | 2.0E-002 |
| NSR-MDP-FS-1B | NSR MDP-1B FAILS TO START | 2.0E-003 |
| NSR-MDP-RUNA | FRACTION OF TIME NSR MDP TRAIN A IS RUNNING | 5.0E-001 |
| NSR-MDP-TM-1B | NSR MDP-1B UNAVAILABLE DUE TO T & M | 2.4E-002 |
| NSR-XHE-XL-NSRSYSL | FAILURE TO RECOVER NSR (RN) VIA X-TIE TO U2 F | 1.0E-001 |
| NSR-XHE-XR-MDP1B | OPERATOR FAILS TO RESTORE NSR MDP-1B AFTER T | 1.0E-003 |
| RCS-MDP-LK-BP1 | RCP SEAL STAGE 1 INTEGRITY (BINDING/POPPI NG | 1.3E-002 |
| RCS-MDP-LK-BP2 | RCP SEAL STAGE 2 INTEGRITY (BINDING/POPPI NG | 2.0E-001 |
| RPS-BME-CF-RTBAB | CCF OF RTB-A AND RTB-B (MECHANICAL) | 1.6E-006 |
| RPS-CCP-TM-CHA | CH-A IN T&M | 5.0E-003 |
| RPS-CCX-CF-6OF8 | CCF 6 ANALOG PROCESS LOGIC MODULES IN 3 OF 4 | 1.8E-006 |
| RPS-ROD-CF-RCCAS | CCF 10 OR MORE RCCAS FAIL TO DROP | 1.2E-006 |
| RPS-TXX-CF-6OF8 | CCF 6 BISTABLES IN 3 OF 4 CHANNELS | 2.7E-006 |
| RPS-UVL-CF-UVDAB | CCF UV DRIVERS TRAINS A AND B (2 0F 2) | 1.0E-005 |
| RPS-XHE-XE-NSGNL | OPERATOR FAILS TO RESPOND WITH NO RPS SIGNAL | 5.0E-001 |
| RPS-XHE-XE-SIGNL | OPERATOR FAILS TO RESPOND WITH RPS SIGNAL PRE | 1.0E-002 |
| SSF-ACX-FR-SSF2 | FAILURE OF SSF AHU FAN #2 TO RUN | 2.6E-003 |
| SSF-ACX-FS-SSF2 | FAILURE OF SSF AHU FAN #2 TO START | 8.0E-004 |
| SSF-MOV-CC-1013C | FAILURE OF SSF MAKE-UP PDP TRAIN DISCH MOV 10 | 1.0E-003 |
| SSF-MOV-CC-842AC | FAILURE OF SSF MAKE-UP PDP TRAIN SUCTION MOV | 1.0E-003 |
| SSF-MOV-CC-849AC | FAILURE OF SSF MAKE-UP PDP TRAIN DISCH MOV 84 | 1.0E-003 |
| SSF-PDP-FR-SYS | FAILURE OF SSF MAKE-UP PDP TRAIN TO RUN | 9.8E-004 |
| SSF-PDP-FS-SYS | FAILURE OF SSF MAKE-UP PDP TRAIN TO START | 3.0E-003 |
| SSF-PDP-TM-SYS | SSF PDP SYSTEM UNAVAILABLE DUE TO TEST AND MA | 3.0E-003 |
| SSF-XHE-XR-SYS | OPERATOR FAILS TO RESTORE SSF PDP AFTER T & M | 1.0E-003 |

# ATTACHMENT G – LLOCA, MLOCA W/ LOSS OF 'A' TRAIN

SI - MLOCA, LLOCA with Loss of 'A' Train of NSW

```
                                          Code  Ver : 7:27
Fam  : MCGU_3P                            Model Ver : 2008/06/18
User : IDAHO NATIONAL LABORATORY          Init Event: <PASS>
Ev ID: SI-LLOCA-MLOCA-LOSS-OF-A           Total CCDP:  1.7E-005
Desc : si contributors
```

BASIC EVENT CHANGES

| Event Name | Description | Base Prob | Curr Prob | Type |
|---|---|---|---|---|
| CVW-SYS-TM-RV | Containment ventilation cool | 1.0E-001 | 1.0E+000 | TRUE |
| HE-SIORBO | HOUSE EVENT FOR SI SIGNAL OR | +0.0E+000 | 1.0E+000 | TRUE |
| IE-ISL-HPI | ISLOCA IE 2-CKV HPI interfac | 2.3E-006 | +0.0E+000 | FALSE |
| IE-ISL-LPI | ISLOCA IE 2-CKV LPI interfac | 4.6E-006 | +0.0E+000 | FALSE |
| IE-ISL-RHR | RHR pipe ruptures | 4.0E-006 | +0.0E+000 | FALSE |
| IE-LDCEVDD | Loss of DC Bus B Initiating | 1.2E-003 | +0.0E+000 | FALSE |
| IE-LOACA | Loss of vital ac Bus 1A init | 9.0E-003 | +0.0E+000 | FALSE |
| IE-LOCCW | Loss of Component Cooling Wa | 4.0E-004 | +0.0E+000 | FALSE |
| IE-LOCHS | LOSS OF CONDENSOR HEAT SIN | 8.0E-002 | +0.0E+000 | FALSE |
| IE-LOIA | LOSS OF INSTRUMENT AIR INITI | 1.0E-002 | +0.0E+000 | FALSE |
| IE-LOMFW | LOSS OF MAIN FEEDWATER | 1.0E-001 | +0.0E+000 | FALSE |
| IE-LONSR | Loss of Nuclear Service Wate | 4.0E-004 | +0.0E+000 | FALSE |
| IE-LOOP | LOSS OF OFFSITE POWER | +0.0E+000 | +0.0E+000 | FALSE |
| IE-RXVRUPT | REACTOR VESSEL RUPTURE INIT | 1.0E-007 | +0.0E+000 | FALSE |
| IE-SGTR | STEAM GENERATOR TUBE RUPTU | 4.0E-003 | +0.0E+000 | FALSE |
| IE-SLB | STEAM LINE BREAK | 1.2E-002 | +0.0E+000 | FALSE |
| IE-SLOCA | SMALL LOCA | 6.0E-004 | +0.0E+000 | FALSE |
| IE-SORV | STUCK-OPEN PZR SAFETY VALVE | 3.0E-003 | +0.0E+000 | FALSE |
| IE-TRANS | TRANSIENT | 8.0E-001 | +0.0E+000 | FALSE |
| NSR-STR-CF-ALL | CCF OF ALL 4 NSR STRAINERS | +0.0E+000 | 4.0E-006 | |
| NSR-STR-CF-UN1 | CCF OF ALL UNIT 1 NSR STRAIN | +0.0E+000 | 1.7E-005 | |
| NSR-STR-PG-1A | FAILURE OF NSR MDP-1A STRAIN | 1.7E-004 | 1.0E+000 | |
| NSR-STR-PG-2A | FAILURE OF NSR MDP-2A STRAIN | 1.7E-004 | 1.7E-004 | |
| NSR-XHE-XL-NSRSYS | FAILURE TO RECOVER FROM A LO | 4.0E-002 | 1.0E+000 | TRUE |

---

SEQUENCE PROBABILITIES

Truncation : Cummulative : 100.0% Individual : 0.0%

| Event Tree Name | Sequence Name | CCDP | %Cont |
|---|---|---|---|
| MLOCA | 03 | 9.7E-006 | |
| MLOCA | 10 | 3.2E-006 | |
| MLOCA | 13 | 2.4E-006 | |
| LLOCA | 4 | 1.4E-006 | |
| MLOCA | 11 | 1.3E-007 | |

2008/06/19 10:30:26 page 1

SEQUENCE LOGIC

| Event Tree | Sequence Name | Logic | |
|---|---|---|---|
| MLOCA | 03 | /RPS | /HPI |
| | | /AFW | /SSC |
| | | LPR | HPR |
| MLOCA | 10 | /RPS | HPI |
| | | /ACC | /AFW |
| | | /PZR1 | LPI |
| MLOCA | 13 | /RPS | HPI |
| | | ACC | |
| LLOCA | 4 | ACC | |
| MLOCA | 11 | /RPS | HPI |
| | | /ACC | /AFW |
| | | PZR1 | |

| Fault Tree Name | Description |
|---|---|
| ACC | ACCUMULATOR 3-OF-3 |
| AFW | AUXILIARY FEEDWATER AVAILABLE |
| HPI | HIGH PRESSURE INJECTION |
| HPR | SUMP RECIRC |
| LPI | LOW PRESSURE INJECTION |
| LPR | LOW PRESSURE RECIRC |
| PZR1 | RCS DEPRESS FOR LPI (PORVs, etc.) |
| RPS | REACTOR PROTECTION SYSTEM |
| SSC | SECONDARY SIDE COOLDOWN (POST-LOCA) |

---

SEQUENCE CUT SETS

Truncation: Cummulative: 100.0% Individual: 1.0%

Event Tree: MLOCA CCDP: 9.7E-006
Sequence: 03

| CCDP | % Cut Set | Cut Set Events | |
|---|---|---|---|
| 2.4E-006 | 24.77 | NSR-MDP-TM-1B | NSR-STR-PG-1A |
| | | NSR-MDP-RUNA | |
| 6.0E-007 | 6.19 | CCW-MDP-TM-MDB | NSR-STR-PG-1A |
| | | NSR-MDP-RUNA | |
| 5.0E-007 | 5.16 | RHR-HTX-TM-HTX1B | NSR-STR-PG-1A |
| | | NSR-MDP-RUNA | |
| 4.0E-007 | 4.13 | HPR-XHE-XM-RECIRC | |

2008/06/19 10:30:26 page 2

| | | | |
|---|---|---|---|
| 3.0E-007 | 3.10 | RHR-FAN-FS-RMB | NSR-STR-PG-1A |
| | | NSR-MDP-RUNA | |
| 3.0E-007 | 3.10 | RHR-FAN-FS-RMB | NSR-STR-PG-1A |
| | | NSR-MDP-RUNB | |
| 2.5E-007 | 2.58 | CCW-HTX-TM-HTX1B | NSR-STR-PG-1A |
| | | NSR-MDP-RUNA | |
| 2.0E-007 | 2.06 | NSR-MDP-FS-1B | NSR-STR-PG-1A |
| | | NSR-MDP-RUNA | |
| 1.5E-007 | 1.55 | RHR-MDP-FS-1B | NSR-STR-PG-1A |
| | | NSR-MDP-RUNB | |
| 1.5E-007 | 1.55 | RHR-MDP-FS-1B | NSR-STR-PG-1A |
| | | NSR-MDP-RUNA | |
| 1.2E-007 | 1.24 | RHR-AOV-CC-231B | NSR-STR-PG-1A |
| | | NSR-MDP-RUNB | |
| 1.2E-007 | 1.24 | RHR-AOV-CC-231B | NSR-STR-PG-1A |
| | | NSR-MDP-RUNA | |
| 1.0E-007 | 1.03 | CCW-MDP-FS-1B2 | NSR-STR-PG-1A |
| | | NSR-MDP-RUNA | CCW-MDP-RUNA1A2 |
| 1.0E-007 | 1.03 | NSR-STR-PG-1A | CCW-MOV-OO-KC2B |
| | | NSR-MDP-RUNB | |
| 1.0E-007 | 1.03 | NSR-XHE-XR-MDP1B | NSR-STR-PG-1A |
| | | NSR-MDP-RUNA | |
| 1.0E-007 | 1.03 | CCW-MDP-FS-1B2 | NSR-STR-PG-1A |
| | | NSR-MDP-RUNB | CCW-MDP-RUNA1A2 |
| 1.0E-007 | 1.03 | NSR-STR-PG-1A | RHR-MOV-OO-67B |
| | | NSR-MDP-RUNB | |
| 1.0E-007 | 1.03 | CCW-MDP-FS-1B1 | NSR-STR-PG-1A |
| | | NSR-MDP-RUNA | CCW-MDP-RUNA1A2 |
| 1.0E-007 | 1.03 | CCW-MDP-FS-1B1 | NSR-STR-PG-1A |
| | | NSR-MDP-RUNB | CCW-MDP-RUNA1A2 |
| 1.0E-007 | 1.03 | RHR-XHE-XR-MDP1B | NSR-STR-PG-1A |
| | | NSR-MDP-RUNA | |
| 1.0E-007 | 1.03 | RHR-XHE-XR-HTX1B | NSR-STR-PG-1A |
| | | NSR-MDP-RUNB | |
| 1.0E-007 | 1.03 | RHR-XHE-XR-MDP1B | NSR-STR-PG-1A |
| | | NSR-MDP-RUNB | |
| 1.0E-007 | 1.03 | CCW-XHE-XR-HTX1B | NSR-STR-PG-1A |
| | | NSR-MDP-RUNB | |
| 1.0E-007 | 1.03 | CCW-MOV-CC-KC81B | NSR-STR-PG-1A |
| | | NSR-MDP-RUNB | |
| 1.0E-007 | 1.03 | CCW-MOV-OO-KC53B | NSR-STR-PG-1A |
| | | NSR-MDP-RUNB | |
| 1.0E-007 | 1.03 | HPR-MOV-CC-184B | NSR-STR-PG-1A |
| | | NSR-MDP-RUNB | |
| 1.0E-007 | 1.03 | HPR-MOV-CC-184B | NSR-STR-PG-1A |
| | | NSR-MDP-RUNA | |
| 1.0E-007 | 1.03 | CCW-MOV-OO-KC53B | NSR-STR-PG-1A |
| | | NSR-MDP-RUNA | |
| 1.0E-007 | 1.03 | RHR-MOV-OO-4B | NSR-STR-PG-1A |
| | | NSR-MDP-RUNA | |
| 1.0E-007 | 1.03 | HPR-MOV-CC-136B | NSR-STR-PG-1A |
| | | NSR-MDP-RUNA | |

| | | | |
|---|---|---|---|
| 1.0E-007 | 1.03 | CCW-MOV-CC-KC81B<br>NSR-MDP-RUNA | NSR-STR-PG-1A |
| 1.0E-007 | 1.03 | CCW-XHE-XR-HTX1B<br>NSR-MDP-RUNA | NSR-STR-PG-1A |
| 1.0E-007 | 1.03 | NSR-STR-PG-1A<br>NSR-MDP-RUNA | CCW-MOV-OO-KC2B |
| 1.0E-007 | 1.03 | HPR-MOV-CC-136B<br>NSR-MDP-RUNB | NSR-STR-PG-1A |
| 1.0E-007 | 1.03 | RHR-XHE-XR-HTX1B<br>NSR-MDP-RUNA | NSR-STR-PG-1A |
| 1.0E-007 | 1.03 | NSR-STR-PG-1A<br>NSR-MOV-CC-RN152B | NSR-MDP-RUNA |
| 1.0E-007 | 1.03 | NSR-STR-PG-1A<br>NSR-MDP-RUNA | RHR-MOV-OO-67B |
| 1.0E-007 | 1.03 | NSR-STR-PG-1A<br>NSR-MOV-CC-RN9B | NSR-MDP-RUNA |
| 1.0E-007 | 1.03 | NSR-STR-PG-1A<br>NSR-MOV-CC-RN152B | NSR-MDP-RUNB |
| 1.0E-007 | 1.03 | RHR-MOV-OO-4B<br>NSR-MDP-RUNB | NSR-STR-PG-1A |
| 1.0E-007 | 1.03 | NSR-STR-PG-1A<br>NSR-MOV-CC-RN9B | NSR-MDP-RUNB |

Event Tree: MLOCA CCDP: 3.2E-006
Sequence: 10

| CCDP | % Cut Set | Cut Set Events | |
|---|---|---|---|
| 1.2E-006 | 37.79 | NSR-MDP-TM-1B<br>NSR-MDP-RUNA | NSR-STR-PG-1A<br>CVC-MDP-RUNA |
| 1.2E-006 | 37.79 | NSR-MDP-TM-1B<br>NSR-MDP-RUNA | NSR-STR-PG-1A<br>CVC-MDP-RUNB |
| 1.0E-007 | 3.15 | NSR-MDP-FS-1B<br>NSR-MDP-RUNA | NSR-STR-PG-1A<br>CVC-MDP-RUNB |
| 1.0E-007 | 3.15 | NSR-MDP-FS-1B<br>NSR-MDP-RUNA | NSR-STR-PG-1A<br>CVC-MDP-RUNA |
| 5.0E-008 | 1.57 | NSR-STR-PG-1A<br>NSR-MDP-RUNB | CVC-MDP-RUNA<br>NSR-MOV-CC-RN9B |
| 5.0E-008 | 1.57 | NSR-STR-PG-1A<br>CVC-MDP-RUNB | NSR-MDP-RUNA<br>NSR-MOV-CC-RN9B |
| 5.0E-008 | 1.57 | NSR-STR-PG-1A<br>CVC-MDP-RUNB | NSR-MDP-RUNA<br>NSR-MOV-CC-RN152B |
| 5.0E-008 | 1.57 | NSR-STR-PG-1A<br>CVC-MDP-RUNA | NSR-MDP-RUNA<br>NSR-MOV-CC-RN9B |
| 5.0E-008 | 1.57 | NSR-STR-PG-1A<br>NSR-MDP-RUNB | CVC-MDP-RUNA<br>NSR-MOV-CC-RN152B |
| 5.0E-008 | 1.57 | NSR-XHE-XR-MDP1B<br>NSR-MDP-RUNA | NSR-STR-PG-1A<br>CVC-MDP-RUNA |
| 5.0E-008 | 1.57 | NSR-STR-PG-1A<br>NSR-MDP-RUNB | CVC-MDP-RUNB<br>NSR-MOV-CC-RN9B |
| 5.0E-008 | 1.57 | NSR-XHE-XR-MDP1B<br>NSR-MDP-RUNA | NSR-STR-PG-1A<br>CVC-MDP-RUNB |

```
 5.0E-008         1.57     NSR-STR-PG-1A              NSR-MDP-RUNA
                           CVC-MDP-RUNA               NSR-MOV-CC-RN152B
 5.0E-008         1.57     NSR-STR-PG-1A              CVC-MDP-RUNB
                           NSR-MDP-RUNB               NSR-MOV-CC-RN152B

     Event Tree: MLOCA                                    CCDP:  2.4E-006
     Sequence:   13

  CCDP       % Cut Set                      Cut Set Events
---------    ---------    ----------------------------------------------------
 3.0E-007        12.57     NSR-MDP-TM-1B              NSR-STR-PG-1A
                           NSR-MDP-RUNA               CVC-MDP-RUNB
                           LOCA-CL1B
 3.0E-007        12.57     NSR-MDP-TM-1B              NSR-STR-PG-1A
                           NSR-MDP-RUNA               CVC-MDP-RUNA
                           LOCA-CL1C
 3.0E-007        12.57     NSR-MDP-TM-1B              NSR-STR-PG-1A
                           NSR-MDP-RUNA               CVC-MDP-RUNB
                           LOCA-CL1A
 3.0E-007        12.57     NSR-MDP-TM-1B              NSR-STR-PG-1A
                           NSR-MDP-RUNA               CVC-MDP-RUNB
                           LOCA-CL1C
 3.0E-007        12.57     NSR-MDP-TM-1B              NSR-STR-PG-1A
                           NSR-MDP-RUNA               CVC-MDP-RUNA
                           LOCA-CL1A
 3.0E-007        12.57     NSR-MDP-TM-1B              NSR-STR-PG-1A
                           NSR-MDP-RUNA               CVC-MDP-RUNA
                           LOCA-CL1B
 2.5E-008         1.05     NSR-MDP-FS-1B              NSR-STR-PG-1A
                           NSR-MDP-RUNA               CVC-MDP-RUNA
                           LOCA-CL1C
 2.5E-008         1.05     NSR-MDP-FS-1B              NSR-STR-PG-1A
                           NSR-MDP-RUNA               CVC-MDP-RUNB
                           LOCA-CL1B
 2.5E-008         1.05     NSR-MDP-FS-1B              NSR-STR-PG-1A
                           NSR-MDP-RUNA               CVC-MDP-RUNA
                           LOCA-CL1B
 2.5E-008         1.05     NSR-MDP-FS-1B              NSR-STR-PG-1A
                           NSR-MDP-RUNA               CVC-MDP-RUNB
                           LOCA-CL1A
 2.5E-008         1.05     NSR-MDP-FS-1B              NSR-STR-PG-1A
                           NSR-MDP-RUNA               CVC-MDP-RUNA
                           LOCA-CL1A
 2.5E-008         1.05     NSR-MDP-FS-1B              NSR-STR-PG-1A
                           NSR-MDP-RUNA               CVC-MDP-RUNB
                           LOCA-CL1C

     Event Tree: LLOCA                                    CCDP:  1.5E-006
     Sequence:   4

  CCDP       % Cut Set                      Cut Set Events
---------    ---------    ----------------------------------------------------


    2008/06/19                    10:30:26                       page     5
```

| | | |
|---|---|---|
| 6.3E-007 | 43.24 | LOCA-CL1A |
| 6.3E-007 | 43.24 | LOCA-CL1B |
| 6.3E-007 | 43.24 | LOCA-CL1C |

Event Tree: MLOCA CCDP: 1.3E-007
Sequence: 11

| CCDP | % Cut Set | Cut Set Events | |
|---|---|---|---|
| 4.8E-008 | 37.52 | NSR-MDP-TM-1B | NSR-STR-PG-1A |
| | | OPR-XHE-XM-DEPRCS1 | NSR-MDP-RUNA |
| | | CVC-MDP-RUNA | |
| 4.8E-008 | 37.52 | NSR-MDP-TM-1B | NSR-STR-PG-1A |
| | | OPR-XHE-XM-DEPRCS1 | NSR-MDP-RUNA |
| | | CVC-MDP-RUNB | |
| 4.0E-009 | 3.13 | NSR-MDP-FS-1B | NSR-STR-PG-1A |
| | | OPR-XHE-XM-DEPRCS1 | NSR-MDP-RUNA |
| | | CVC-MDP-RUNA | |
| 4.0E-009 | 3.13 | NSR-MDP-FS-1B | NSR-STR-PG-1A |
| | | OPR-XHE-XM-DEPRCS1 | NSR-MDP-RUNA |
| | | CVC-MDP-RUNB | |
| 2.0E-009 | 1.56 | NSR-STR-PG-1A | OPR-XHE-XM-DEPRCS1 |
| | | NSR-MDP-RUNA | CVC-MDP-RUNA |
| | | NSR-MOV-CC-RN9B | |
| 2.0E-009 | 1.56 | NSR-STR-PG-1A | OPR-XHE-XM-DEPRCS1 |
| | | CVC-MDP-RUNA | NSR-MDP-RUNB |
| | | NSR-MOV-CC-RN152B | |
| 2.0E-009 | 1.56 | NSR-STR-PG-1A | OPR-XHE-XM-DEPRCS1 |
| | | CVC-MDP-RUNB | NSR-MDP-RUNB |
| | | NSR-MOV-CC-RN9B | |
| 2.0E-009 | 1.56 | NSR-STR-PG-1A | OPR-XHE-XM-DEPRCS1 |
| | | NSR-MDP-RUNA | CVC-MDP-RUNB |
| | | NSR-MOV-CC-RN152B | |
| 2.0E-009 | 1.56 | NSR-STR-PG-1A | OPR-XHE-XM-DEPRCS1 |
| | | CVC-MDP-RUNB | NSR-MDP-RUNB |
| | | NSR-MOV-CC-RN152B | |
| 2.0E-009 | 1.56 | NSR-STR-PG-1A | OPR-XHE-XM-DEPRCS1 |
| | | NSR-MDP-RUNA | CVC-MDP-RUNB |
| | | NSR-MOV-CC-RN9B | |
| 2.0E-009 | 1.56 | NSR-STR-PG-1A | OPR-XHE-XM-DEPRCS1 |
| | | NSR-MDP-RUNA | CVC-MDP-RUNA |
| | | NSR-MOV-CC-RN152B | |
| 2.0E-009 | 1.56 | NSR-XHE-XR-MDP1B | NSR-STR-PG-1A |
| | | OPR-XHE-XM-DEPRCS1 | NSR-MDP-RUNA |
| | | CVC-MDP-RUNB | |
| 2.0E-009 | 1.56 | NSR-STR-PG-1A | OPR-XHE-XM-DEPRCS1 |
| | | CVC-MDP-RUNA | NSR-MDP-RUNB |
| | | NSR-MOV-CC-RN9B | |
| 2.0E-009 | 1.56 | NSR-XHE-XR-MDP1B | NSR-STR-PG-1A |
| | | OPR-XHE-XM-DEPRCS1 | NSR-MDP-RUNA |
| | | CVC-MDP-RUNA | |

2008/06/19 10:30:26 page 6

BASIC EVENTS (Cut Sets Only)

| Event Name | Description | Curr Prob |
|---|---|---|
| CCW-HTX-TM-HTX1B | CCW HTX-1B UNAVAILABLE DUE TO T & M | 2.5E-003 |
| CCW-MDP-FS-1B1 | CCW MDP-1B1 FAILS TO START | 2.0E-003 |
| CCW-MDP-FS-1B2 | CCW MDP-1B2 FAILS TO START | 2.0E-003 |
| CCW-MDP-RUNA1A2 | FRACTION OF TIME CCW MDP 1A1 AND 1A2 ARE INIT | 5.0E-001 |
| CCW-MDP-TM-MDB | CCW MDPS 1B1/1B2 UNAVAILABLE DUE TO T & M | 6.0E-003 |
| CCW-MOV-CC-KC81B | FAILURE OF CCW MOV KC81B TO RHR HTX-B | 1.0E-003 |
| CCW-MOV-OO-KC2B | FAILURE OF CCW AUX BLDG HDR MOV KC2B TO CLOSE | 1.0E-003 |
| CCW-MOV-OO-KC53B | FAILURE OF CCW AUX BLDG HDR MOV KC53B TO CLOS | 1.0E-003 |
| CCW-XHE-XR-HTX1B | OPERATOR FAILS TO RESTORE CCW HTX-1B AFTER T | 1.0E-003 |
| CVC-MDP-RUNA | FRACTION OF TIME CVC MDP TRAIN A IS RUNNING | 5.0E-001 |
| CVC-MDP-RUNB | FRACTION OF TIME CVC MDP TRAIN B IS RUNNING | 5.0E-001 |
| HPR-MOV-CC-136B | RHR DISCHARGE MOV 136B FAILS TO OPEN | 1.0E-003 |
| HPR-MOV-CC-184B | SUMP RECIRCULATION MOV 184B FAILS | 1.0E-003 |
| HPR-XHE-XM-RECIRC | OPERATOR FAILS TO INITIATE HPR | 2.0E-003 |
| LOCA-CL1A | LOCA OCCURRED IN COLD LEG LOOP 1A | 2.5E-001 |
| LOCA-CL1B | LOCA OCCURRED IN COLD LEG LOOP 1B | 2.5E-001 |
| LOCA-CL1C | LOCA OCCURRED IN COLD LEG LOOP 1C | 2.5E-001 |
| NSR-MDP-FS-1B | NSR MDP-1B FAILS TO START | 2.0E-003 |
| NSR-MDP-RUNA | FRACTION OF TIME NSR MDP TRAIN A IS RUNNING | 5.0E-001 |
| NSR-MDP-RUNB | FRACTION OF TIME NSR MDP TRAIN B IS RUNNING | 5.0E-001 |
| NSR-MDP-TM-1B | NSR MDP-1B UNAVAILABLE DUE TO T & M | 2.4E-002 |
| NSR-MOV-CC-RN152B | FAILURE TO OPEN NSR PUMP B SNSWP DISCHARGE MO | 1.0E-003 |
| NSR-MOV-CC-RN9B | FAILURE TO OPEN NSR PUMP B SNSWP SUCTION MOV | 1.0E-003 |
| NSR-STR-PG-1A | FAILURE OF NSR MDP-1A STRAINER | 1.0E+000 |
| NSR-XHE-XR-MDP1B | OPERATOR FAILS TO RESTORE NSR MDP-1B AFTER T | 1.0E-003 |
| OPR-XHE-XM-DEPRCS1 | OPERATOR FAILS TO RAPIDLY DEPRESSURIZE RCS | 4.0E-002 |
| RHR-AOV-CC-231B | FAILURE OF RHR MDP-1B ROOM COOLING INLET AOV | 1.2E-003 |
| RHR-FAN-FS-RMB | FAILURE OF RHR MDP-1B RM COOLING FAN TO START | 3.0E-003 |
| RHR-HTX-TM-HTX1B | RHR HTX-1B UNAVAILABLE DUE TO T & M | 5.0E-003 |
| RHR-MDP-FS-1B | RHR MDP 1B FAILS TO START | 1.5E-003 |
| RHR-MOV-OO-4B | RHR RWST ISOLATION MOV 4B FAILS | 1.0E-003 |
| RHR-MOV-OO-67B | RHR MDP B MIN-FLOW VALVE 67BA FAILS TO OPEN | 1.0E-003 |
| RHR-XHE-XR-HTX1B | OPERATOR FAILS TO RESTORE RHR HTX-1B AFTER T | 1.0E-003 |
| RHR-XHE-XR-MDP1B | OPERATOR FAILS TO RESTORE RHR MDP 1B AFTER T | 1.0E-003 |

# ATTACHMENT H – SLOCA, SGTR,SORV W/ LOSS OF 'A' TRAIN

SI SLOCA SGTR SORV W LOSS OF 'A' TRAIN

```
                                          Code  Ver : 7:27
Fam  : MCGU_3P                            Model Ver : 2008/06/18
User : IDAHO NATIONAL LABORATORY          Init Event: <PASS>
Ev ID: SI-SLOCA-EQ-W-LOSS-OF-A            Total CCDP:  3.0E-004
Desc : si contributors
```

BASIC EVENT CHANGES

| Event Name | Description | Base Prob | Curr Prob | Type |
|---|---|---|---|---|
| CVW-SYS-TM-RV | Containment ventilation cool | 1.0E-001 | 1.0E+000 | TRUE |
| HE-SIORBO | HOUSE EVENT FOR SI SIGNAL OR | +0.0E+000 | 1.0E+000 | TRUE |
| IE-ISL-HPI | ISLOCA IE 2-CKV HPI interfac | 2.3E-006 | +0.0E+000 | FALSE |
| IE-ISL-LPI | ISLOCA IE 2-CKV LPI interfac | 4.6E-006 | +0.0E+000 | FALSE |
| IE-ISL-RHR | RHR pipe ruptures | 4.0E-006 | +0.0E+000 | FALSE |
| IE-LDCEVDD | Loss of DC Bus B Initiating | 1.2E-003 | +0.0E+000 | FALSE |
| IE-LLOCA | Large Loss of Coolant Accide | 2.5E-006 | +0.0E+000 | FALSE |
| IE-LOACA | Loss of vital ac Bus 1A init | 9.0E-003 | +0.0E+000 | FALSE |
| IE-LOCCW | Loss of Component Cooling Wa | 4.0E-004 | +0.0E+000 | FALSE |
| IE-LOCHS | LOSS OF CONDENSOR HEAT SIN | 8.0E-002 | +0.0E+000 | FALSE |
| IE-LOIA | LOSS OF INSTRUMENT AIR INITI | 1.0E-002 | +0.0E+000 | FALSE |
| IE-LOMFW | LOSS OF MAIN FEEDWATER | 1.0E-001 | +0.0E+000 | FALSE |
| IE-LONSR | Loss of Nuclear Service Wate | 4.0E-004 | +0.0E+000 | FALSE |
| IE-LOOP | LOSS OF OFFSITE POWER | +0.0E+000 | +0.0E+000 | FALSE |
| IE-MLOCA | MEDIUM LOCA | 2.0E-004 | +0.0E+000 | FALSE |
| IE-RXVRUPT | REACTOR VESSEL RUPTURE INIT | 1.0E-007 | +0.0E+000 | FALSE |
| IE-SLB | STEAM LINE BREAK | 1.2E-002 | +0.0E+000 | FALSE |
| IE-TRANS | TRANSIENT | 8.0E-001 | +0.0E+000 | FALSE |
| NSR-STR-CF-ALL | CCF OF ALL 4 NSR STRAINERS | +0.0E+000 | 4.0E-006 | |
| NSR-STR-CF-UN1 | CCF OF ALL UNIT 1 NSR STRAIN | +0.0E+000 | 1.7E-005 | |
| NSR-STR-PG-1A | FAILURE OF NSR MDP-1A STRAIN | 1.7E-004 | 1.0E+000 | |
| NSR-STR-PG-2A | FAILURE OF NSR MDP-2A STRAIN | 1.7E-004 | 1.7E-004 | |
| NSR-XHE-XL-NSRSYS | FAILURE TO RECOVER FROM A LO | 4.0E-002 | 1.0E+000 | TRUE |

---

SEQUENCE PROBABILITIES

Truncation : Cummulative : 100.0% Individual : 0.0%

| Event Tree Name | Sequence Name | CCDP | %Cont |
|---|---|---|---|
| SORV | 03 | 1.4E-004 | |
| SGTR | 16 | 6.4E-005 | |
| SORV | 10 | 4.8E-005 | |
| SLOCA | 03 | 2.5E-005 | |
| SLOCA | 11 | 9.5E-006 | |
| SGTR | 18 | 4.4E-006 | |
| SGTR | 11 | 3.4E-006 | |
| SORV | 05 | 3.1E-006 | |

2008/06/19 10:39:07 page 1

```
SGTR                        20                          2.1E-006
SORV                        11                          1.9E-006
SGTR                        22                          1.8E-006

          SEQUENCE LOGIC
Event Tree     Sequence Name                      Logic
-------------- ------------- ---------------------------------------------------
SORV           03            /RPS                      /HPI
                             /AFW-LOCA                 /SSC
                              LPR                       HPR

SGTR           16            /RPS                      /FW
                              HPI                      /SGI1
                              SSC1

SORV           10            /RPS                       HPI
                             /ACC                      /AFW-LOCA
                             /PZR1                      LPI

SLOCA          03            /RPS                      /FW-LOCA
                             /HPI                      /SSC
                             /PZR                       RHR
                              LPR

SLOCA          11            /RPS                      /FW-LOCA
                              HPI                      /SSC1
                             /PZR1                      LPI

SGTR           18            /RPS                      /FW
                              HPI                       SGI1
                              ECA

SGTR           11            /RPS                      /FW
                             /HPI                       SGI
                              ECA

SORV           05            /RPS                      /HPI
                             /AFW-LOCA                  SSC
                              HPR

SGTR           20            /RPS                       FW
                             /FAB                      /SGI
                              HPR

SORV           11            /RPS                       HPI
                             /ACC                      /AFW-LOCA
                              PZR1

SGTR           22            /RPS                       FW
                              FAB
```

| Fault Tree Name | Description |
|---|---|
| ACC | ACCUMULATOR 3-OF-3 |
| AFW-LOCA | Developed Event |
| ECA | COOLDOWN AND DEPRESS (ECA-3.1/3.2) |
| FAB | FEED AND BLEED |
| FW | FEEDWATER (AFW or MFW) |
| FW-LOCA | Developed Event |
| HPI | HIGH PRESSURE INJECTION |
| HPR | SUMP RECIRC |
| LPI | LOW PRESSURE INJECTION |
| LPR | LOW PRESSURE RECIRC |
| PZR | REACTOR COOLANT SYSTEM DEPRESS |
| PZR1 | RCS DEPRESS FOR LPI (PORVs, etc.) |
| RHR | RESIDUAL HEAT REMOVAL |
| RPS | REACTOR PROTECTION SYSTEM |
| SGI | FAULTED STEAM GENERATOR ISOLATION |
| SGI1 | FAULTED STEAM GENERATOR ISOLATION |
| SSC | SECONDARY SIDE COOLDOWN (POST-LOCA) |
| SSC1 | SECONDARY SIDE COOLDOWN (POST-LOCA) |

---

SEQUENCE CUT SETS

Truncation: Cummulative: 100.0% Individual: 1.0%

Event Tree: SORV CCDP: 1.4E-004
Sequence: 03

| CCDP | % Cut Set | Cut Set Events | |
|---|---|---|---|
| 3.6E-005 | 26.16 | NSR-MDP-TM-1B<br>NSR-MDP-RUNA | NSR-STR-PG-1A |
| 9.0E-006 | 6.54 | CCW-MDP-TM-MDB<br>NSR-MDP-RUNA | NSR-STR-PG-1A |
| 7.5E-006 | 5.45 | RHR-HTX-TM-HTX1B<br>NSR-MDP-RUNA | NSR-STR-PG-1A |
| 4.5E-006 | 3.27 | RHR-FAN-FS-RMB<br>NSR-MDP-RUNA | NSR-STR-PG-1A |
| 4.5E-006 | 3.27 | RHR-FAN-FS-RMB<br>NSR-MDP-RUNB | NSR-STR-PG-1A |
| 3.8E-006 | 2.73 | CCW-HTX-TM-HTX1B<br>NSR-MDP-RUNA | NSR-STR-PG-1A |
| 3.0E-006 | 2.18 | NSR-MDP-FS-1B<br>NSR-MDP-RUNA | NSR-STR-PG-1A |
| 2.3E-006 | 1.64 | RHR-MDP-FS-1B<br>NSR-MDP-RUNA | NSR-STR-PG-1A |
| 2.3E-006 | 1.64 | RHR-MDP-FS-1B<br>NSR-MDP-RUNB | NSR-STR-PG-1A |
| 1.8E-006 | 1.31 | RHR-AOV-CC-231B | NSR-STR-PG-1A |

2008/06/19 10:39:07 page 3

| | | | |
|---|---|---|---|
| | | NSR-MDP-RUNA | |
| 1.8E-006 | 1.31 | RHR-AOV-CC-231B | NSR-STR-PG-1A |
| | | NSR-MDP-RUNB | |
| 1.5E-006 | 1.09 | NSR-STR-PG-1A | CCW-MOV-OO-KC2B |
| | | NSR-MDP-RUNB | |
| 1.5E-006 | 1.09 | NSR-STR-PG-1A | RHR-MOV-OO-67B |
| | | NSR-MDP-RUNA | |
| 1.5E-006 | 1.09 | RHR-XHE-XR-MDP1B | NSR-STR-PG-1A |
| | | NSR-MDP-RUNA | |
| 1.5E-006 | 1.09 | CCW-MOV-CC-KC81B | NSR-STR-PG-1A |
| | | NSR-MDP-RUNB | |
| 1.5E-006 | 1.09 | RHR-XHE-XR-HTX1B | NSR-STR-PG-1A |
| | | NSR-MDP-RUNA | |
| 1.5E-006 | 1.09 | RHR-MOV-OO-4B | NSR-STR-PG-1A |
| | | NSR-MDP-RUNB | |
| 1.5E-006 | 1.09 | NSR-STR-PG-1A | NSR-MDP-RUNA |
| | | NSR-MOV-CC-RN9B | |
| 1.5E-006 | 1.09 | CCW-MOV-OO-KC53B | NSR-STR-PG-1A |
| | | NSR-MDP-RUNB | |
| 1.5E-006 | 1.09 | HPR-MOV-CC-184B | NSR-STR-PG-1A |
| | | NSR-MDP-RUNB | |
| 1.5E-006 | 1.09 | HPR-MOV-CC-184B | NSR-STR-PG-1A |
| | | NSR-MDP-RUNA | |
| 1.5E-006 | 1.09 | CCW-XHE-XR-HTX1B | NSR-STR-PG-1A |
| | | NSR-MDP-RUNA | |
| 1.5E-006 | 1.09 | CCW-MOV-OO-KC53B | NSR-STR-PG-1A |
| | | NSR-MDP-RUNA | |
| 1.5E-006 | 1.09 | NSR-XHE-XR-MDP1B | NSR-STR-PG-1A |
| | | NSR-MDP-RUNA | |
| 1.5E-006 | 1.09 | RHR-XHE-XR-MDP1B | NSR-STR-PG-1A |
| | | NSR-MDP-RUNB | |
| 1.5E-006 | 1.09 | NSR-STR-PG-1A | CCW-MOV-OO-KC2B |
| | | NSR-MDP-RUNA | |
| 1.5E-006 | 1.09 | RHR-XHE-XR-HTX1B | NSR-STR-PG-1A |
| | | NSR-MDP-RUNB | |
| 1.5E-006 | 1.09 | RHR-MOV-OO-4B | NSR-STR-PG-1A |
| | | NSR-MDP-RUNA | |
| 1.5E-006 | 1.09 | NSR-STR-PG-1A | NSR-MDP-RUNB |
| | | NSR-MOV-CC-RN9B | |
| 1.5E-006 | 1.09 | NSR-STR-PG-1A | NSR-MDP-RUNB |
| | | NSR-MOV-CC-RN152B | |
| 1.5E-006 | 1.09 | CCW-MOV-CC-KC81B | NSR-STR-PG-1A |
| | | NSR-MDP-RUNA | |
| 1.5E-006 | 1.09 | NSR-STR-PG-1A | RHR-MOV-OO-67B |
| | | NSR-MDP-RUNB | |
| 1.5E-006 | 1.09 | CCW-XHE-XR-HTX1B | NSR-STR-PG-1A |
| | | NSR-MDP-RUNB | |
| 1.5E-006 | 1.09 | NSR-STR-PG-1A | NSR-MDP-RUNA |
| | | NSR-MOV-CC-RN152B | |
| 1.5E-006 | 1.09 | CCW-MDP-FS-1B1 | NSR-STR-PG-1A |
| | | NSR-MDP-RUNB | CCW-MDP-RUNA1A2 |
| 1.5E-006 | 1.09 | CCW-MDP-FS-1B2 | NSR-STR-PG-1A |

```
                              NSR-MDP-RUNB              CCW-MDP-RUNA1A2
  1.5E-006         1.09       CCW-MDP-FS-1B2            NSR-STR-PG-1A
                              NSR-MDP-RUNA              CCW-MDP-RUNA1A2
  1.5E-006         1.09       CCW-MDP-FS-1B1            NSR-STR-PG-1A
                              NSR-MDP-RUNA              CCW-MDP-RUNA1A2

      Event Tree: SGTR                                      CCDP:  6.4E-005
      Sequence:   16

   CCDP       % Cut Set                      Cut Set Events
---------    ---------    ----------------------------------------------------
  2.4E-005        37.72     NSR-MDP-TM-1B             NSR-STR-PG-1A
                            NSR-MDP-RUNA              CVC-MDP-RUNB
  2.4E-005        37.72     NSR-MDP-TM-1B             NSR-STR-PG-1A
                            NSR-MDP-RUNA              CVC-MDP-RUNA
  2.0E-006         3.14     NSR-MDP-FS-1B             NSR-STR-PG-1A
                            NSR-MDP-RUNA              CVC-MDP-RUNA
  2.0E-006         3.14     NSR-MDP-FS-1B             NSR-STR-PG-1A
                            NSR-MDP-RUNA              CVC-MDP-RUNB
  1.0E-006         1.57     NSR-STR-PG-1A             CVC-MDP-RUNB
                            NSR-MDP-RUNB              NSR-MOV-CC-RN9B
  1.0E-006         1.57     NSR-STR-PG-1A             NSR-MDP-RUNA
                            CVC-MDP-RUNA              NSR-MOV-CC-RN9B
  1.0E-006         1.57     NSR-STR-PG-1A             CVC-MDP-RUNA
                            NSR-MDP-RUNB              NSR-MOV-CC-RN152B
  1.0E-006         1.57     NSR-XHE-XR-MDP1B          NSR-STR-PG-1A
                            NSR-MDP-RUNA              CVC-MDP-RUNB
  1.0E-006         1.57     NSR-STR-PG-1A             CVC-MDP-RUNA
                            NSR-MDP-RUNB              NSR-MOV-CC-RN9B
  1.0E-006         1.57     NSR-STR-PG-1A             NSR-MDP-RUNA
                            CVC-MDP-RUNB              NSR-MOV-CC-RN152B
  1.0E-006         1.57     NSR-STR-PG-1A             NSR-MDP-RUNA
                            CVC-MDP-RUNB              NSR-MOV-CC-RN9B
  1.0E-006         1.57     NSR-STR-PG-1A             CVC-MDP-RUNB
                            NSR-MDP-RUNB              NSR-MOV-CC-RN152B
  1.0E-006         1.57     NSR-STR-PG-1A             NSR-MDP-RUNA
                            CVC-MDP-RUNA              NSR-MOV-CC-RN152B
  1.0E-006         1.57     NSR-XHE-XR-MDP1B          NSR-STR-PG-1A
                            NSR-MDP-RUNA              CVC-MDP-RUNA

      Event Tree: SORV                                      CCDP:  4.8E-005
      Sequence:   10

   CCDP       % Cut Set                      Cut Set Events
---------    ---------    ----------------------------------------------------
  1.8E-005        37.79     NSR-MDP-TM-1B             NSR-STR-PG-1A
                            NSR-MDP-RUNA              CVC-MDP-RUNB
  1.8E-005        37.79     NSR-MDP-TM-1B             NSR-STR-PG-1A
                            NSR-MDP-RUNA              CVC-MDP-RUNA
  1.5E-006         3.15     NSR-MDP-FS-1B             NSR-STR-PG-1A
                            NSR-MDP-RUNA              CVC-MDP-RUNA
  1.5E-006         3.15     NSR-MDP-FS-1B             NSR-STR-PG-1A

     2008/06/19                    10:39:07                      page     5
```

| | | | |
|---|---|---|---|
| | | NSR-MDP-RUNA | CVC-MDP-RUNB |
| 7.5E-007 | 1.57 | NSR-XHE-XR-MDP1B | NSR-STR-PG-1A |
| | | NSR-MDP-RUNA | CVC-MDP-RUNB |
| 7.5E-007 | 1.57 | NSR-STR-PG-1A | NSR-MDP-RUNA |
| | | CVC-MDP-RUNA | NSR-MOV-CC-RN9B |
| 7.5E-007 | 1.57 | NSR-STR-PG-1A | CVC-MDP-RUNA |
| | | NSR-MDP-RUNB | NSR-MOV-CC-RN9B |
| 7.5E-007 | 1.57 | NSR-STR-PG-1A | CVC-MDP-RUNB |
| | | NSR-MDP-RUNB | NSR-MOV-CC-RN152B |
| 7.5E-007 | 1.57 | NSR-STR-PG-1A | CVC-MDP-RUNB |
| | | NSR-MDP-RUNB | NSR-MOV-CC-RN9B |
| 7.5E-007 | 1.57 | NSR-STR-PG-1A | NSR-MDP-RUNA |
| | | CVC-MDP-RUNB | NSR-MOV-CC-RN152B |
| 7.5E-007 | 1.57 | NSR-STR-PG-1A | CVC-MDP-RUNA |
| | | NSR-MDP-RUNB | NSR-MOV-CC-RN152B |
| 7.5E-007 | 1.57 | NSR-STR-PG-1A | NSR-MDP-RUNA |
| | | CVC-MDP-RUNB | NSR-MOV-CC-RN9B |
| 7.5E-007 | 1.57 | NSR-XHE-XR-MDP1B | NSR-STR-PG-1A |
| | | NSR-MDP-RUNA | CVC-MDP-RUNA |
| 7.5E-007 | 1.57 | NSR-STR-PG-1A | NSR-MDP-RUNA |
| | | CVC-MDP-RUNA | NSR-MOV-CC-RN152B |

Event Tree: SLOCA CCDP: 2.5E-005
Sequence: 03

| CCDP | % Cut Set | Cut Set Events | |
|---|---|---|---|
| 7.2E-006 | 28.36 | NSR-MDP-TM-1B | NSR-STR-PG-1A |
| | | NSR-MDP-RUNA | |
| 1.8E-006 | 7.09 | CCW-MDP-TM-MDB | NSR-STR-PG-1A |
| | | NSR-MDP-RUNA | |
| 1.5E-006 | 5.91 | RHR-HTX-TM-HTX1B | NSR-STR-PG-1A |
| | | NSR-MDP-RUNA | |
| 9.0E-007 | 3.54 | RHR-FAN-FS-RMB | NSR-STR-PG-1A |
| | | NSR-MDP-RUNB | |
| 9.0E-007 | 3.54 | RHR-FAN-FS-RMB | NSR-STR-PG-1A |
| | | NSR-MDP-RUNA | |
| 7.5E-007 | 2.95 | CCW-HTX-TM-HTX1B | NSR-STR-PG-1A |
| | | NSR-MDP-RUNA | |
| 6.0E-007 | 2.36 | NSR-MDP-FS-1B | NSR-STR-PG-1A |
| | | NSR-MDP-RUNA | |
| 4.5E-007 | 1.77 | RHR-MDP-FS-1B | NSR-STR-PG-1A |
| | | NSR-MDP-RUNA | |
| 4.5E-007 | 1.77 | RHR-MDP-FS-1B | NSR-STR-PG-1A |
| | | NSR-MDP-RUNB | |
| 3.6E-007 | 1.42 | RHR-AOV-CC-231B | NSR-STR-PG-1A |
| | | NSR-MDP-RUNA | |
| 3.6E-007 | 1.42 | RHR-AOV-CC-231B | NSR-STR-PG-1A |
| | | NSR-MDP-RUNB | |
| 3.0E-007 | 1.18 | NSR-STR-PG-1A | CCW-MOV-OO-KC2B |
| | | NSR-MDP-RUNA | |
| 3.0E-007 | 1.18 | CCW-XHE-XR-HTX1B | NSR-STR-PG-1A |

2008/06/19 10:39:07 page 6

| | | | |
|---|---|---|---|
| | | NSR-MDP-RUNA | |
| 3.0E-007 | 1.18 | NSR-STR-PG-1A | CCW-MOV-OO-KC2B |
| | | NSR-MDP-RUNB | |
| 3.0E-007 | 1.18 | CCW-MOV-CC-KC81B | NSR-STR-PG-1A |
| | | NSR-MDP-RUNA | |
| 3.0E-007 | 1.18 | CCW-MOV-OO-KC53B | NSR-STR-PG-1A |
| | | NSR-MDP-RUNA | |
| 3.0E-007 | 1.18 | CCW-MDP-FS-1B2 | NSR-STR-PG-1A |
| | | NSR-MDP-RUNA | CCW-MDP-RUNA1A2 |
| 3.0E-007 | 1.18 | CCW-XHE-XR-HTX1B | NSR-STR-PG-1A |
| | | NSR-MDP-RUNB | |
| 3.0E-007 | 1.18 | NSR-STR-PG-1A | NSR-MDP-RUNB |
| | | NSR-MOV-CC-RN9B | |
| 3.0E-007 | 1.18 | NSR-STR-PG-1A | NSR-MDP-RUNB |
| | | NSR-MOV-CC-RN152B | |
| 3.0E-007 | 1.18 | NSR-STR-PG-1A | NSR-MDP-RUNA |
| | | NSR-MOV-CC-RN152B | |
| 3.0E-007 | 1.18 | CCW-MOV-CC-KC81B | NSR-STR-PG-1A |
| | | NSR-MDP-RUNB | |
| 3.0E-007 | 1.18 | CCW-MOV-OO-KC53B | NSR-STR-PG-1A |
| | | NSR-MDP-RUNB | |
| 3.0E-007 | 1.18 | RHR-XHE-XR-MDP1B | NSR-STR-PG-1A |
| | | NSR-MDP-RUNB | |
| 3.0E-007 | 1.18 | RHR-XHE-XR-HTX1B | NSR-STR-PG-1A |
| | | NSR-MDP-RUNB | |
| 3.0E-007 | 1.18 | RHR-XHE-XR-HTX1B | NSR-STR-PG-1A |
| | | NSR-MDP-RUNA | |
| 3.0E-007 | 1.18 | CCW-MDP-FS-1B2 | NSR-STR-PG-1A |
| | | NSR-MDP-RUNB | CCW-MDP-RUNA1A2 |
| 3.0E-007 | 1.18 | RHR-XHE-XR-MDP1B | NSR-STR-PG-1A |
| | | NSR-MDP-RUNA | |
| 3.0E-007 | 1.18 | NSR-STR-PG-1A | NSR-MDP-RUNA |
| | | NSR-MOV-CC-RN9B | |
| 3.0E-007 | 1.18 | NSR-XHE-XR-MDP1B | NSR-STR-PG-1A |
| | | NSR-MDP-RUNA | |
| 3.0E-007 | 1.18 | CCW-MDP-FS-1B1 | NSR-STR-PG-1A |
| | | NSR-MDP-RUNA | CCW-MDP-RUNA1A2 |
| 3.0E-007 | 1.18 | CCW-MDP-FS-1B1 | NSR-STR-PG-1A |
| | | NSR-MDP-RUNB | CCW-MDP-RUNA1A2 |

Event Tree: SLOCA CCDP: 9.5E-006
Sequence: 11

| CCDP | % Cut Set | Cut Set Events | |
|---|---|---|---|
| 3.6E-006 | 37.79 | NSR-MDP-TM-1B | NSR-STR-PG-1A |
| | | NSR-MDP-RUNA | CVC-MDP-RUNB |
| 3.6E-006 | 37.79 | NSR-MDP-TM-1B | NSR-STR-PG-1A |
| | | NSR-MDP-RUNA | CVC-MDP-RUNA |
| 3.0E-007 | 3.15 | NSR-MDP-FS-1B | NSR-STR-PG-1A |
| | | NSR-MDP-RUNA | CVC-MDP-RUNB |
| 3.0E-007 | 3.15 | NSR-MDP-FS-1B | NSR-STR-PG-1A |

| | | | |
|---|---|---|---|
| | | NSR-MDP-RUNA | CVC-MDP-RUNA |
| 1.5E-007 | 1.57 | NSR-STR-PG-1A | CVC-MDP-RUNA |
| | | NSR-MDP-RUNB | NSR-MOV-CC-RN9B |
| 1.5E-007 | 1.57 | NSR-STR-PG-1A | CVC-MDP-RUNB |
| | | NSR-MDP-RUNB | NSR-MOV-CC-RN152B |
| 1.5E-007 | 1.57 | NSR-XHE-XR-MDP1B | NSR-STR-PG-1A |
| | | NSR-MDP-RUNA | CVC-MDP-RUNA |
| 1.5E-007 | 1.57 | NSR-STR-PG-1A | CVC-MDP-RUNB |
| | | NSR-MDP-RUNB | NSR-MOV-CC-RN9B |
| 1.5E-007 | 1.57 | NSR-STR-PG-1A | NSR-MDP-RUNA |
| | | CVC-MDP-RUNB | NSR-MOV-CC-RN152B |
| 1.5E-007 | 1.57 | NSR-XHE-XR-MDP1B | NSR-STR-PG-1A |
| | | NSR-MDP-RUNA | CVC-MDP-RUNB |
| 1.5E-007 | 1.57 | NSR-STR-PG-1A | NSR-MDP-RUNA |
| | | CVC-MDP-RUNA | NSR-MOV-CC-RN152B |
| 1.5E-007 | 1.57 | NSR-STR-PG-1A | CVC-MDP-RUNA |
| | | NSR-MDP-RUNB | NSR-MOV-CC-RN152B |
| 1.5E-007 | 1.57 | NSR-STR-PG-1A | NSR-MDP-RUNA |
| | | CVC-MDP-RUNA | NSR-MOV-CC-RN9B |
| 1.5E-007 | 1.57 | NSR-STR-PG-1A | NSR-MDP-RUNA |
| | | CVC-MDP-RUNB | NSR-MOV-CC-RN9B |

Event Tree: SGTR CCDP: 4.4E-006
Sequence: 18

| CCDP | % Cut Set | Cut Set Events | |
|---|---|---|---|
| 1.2E-006 | 27.77 | NSR-MDP-TM-1B | NSR-STR-PG-1A |
| | | MSS-XHE-XM-ERROR1 | NSR-MDP-RUNA |
| | | CVC-MDP-RUNB | |
| 1.2E-006 | 27.77 | NSR-MDP-TM-1B | NSR-STR-PG-1A |
| | | MSS-XHE-XM-ERROR1 | NSR-MDP-RUNA |
| | | CVC-MDP-RUNA | |
| 2.4E-007 | 5.45 | MSS-VCF-HW-ISOL | NSR-MDP-TM-1B |
| | | NSR-STR-PG-1A | NSR-MDP-RUNA |
| | | CVC-MDP-RUNB | |
| 2.4E-007 | 5.45 | MSS-VCF-HW-ISOL | NSR-MDP-TM-1B |
| | | NSR-STR-PG-1A | NSR-MDP-RUNA |
| | | CVC-MDP-RUNA | |
| 1.9E-007 | 4.36 | NSR-MDP-TM-1B | NSR-STR-PG-1A |
| | | OPR-XHE-XE-SGTR | NSR-MDP-RUNA |
| | | CVC-MDP-RUNB | |
| 1.9E-007 | 4.36 | NSR-MDP-TM-1B | NSR-STR-PG-1A |
| | | OPR-XHE-XE-SGTR | NSR-MDP-RUNA |
| | | CVC-MDP-RUNA | |
| 1.0E-007 | 2.31 | NSR-MDP-FS-1B | NSR-STR-PG-1A |
| | | MSS-XHE-XM-ERROR1 | NSR-MDP-RUNA |
| | | CVC-MDP-RUNA | |
| 1.0E-007 | 2.31 | NSR-MDP-FS-1B | NSR-STR-PG-1A |
| | | MSS-XHE-XM-ERROR1 | NSR-MDP-RUNA |
| | | CVC-MDP-RUNB | |
| 5.1E-008 | 1.16 | NSR-XHE-XR-MDP1B | NSR-STR-PG-1A |

| | | | |
|---|---|---|---|
| | | MSS-XHE-XM-ERROR1 | NSR-MDP-RUNA |
| | | CVC-MDP-RUNB | |
| 5.1E-008 | 1.16 | NSR-STR-PG-1A | MSS-XHE-XM-ERROR1 |
| | | CVC-MDP-RUNB | NSR-MDP-RUNB |
| | | NSR-MOV-CC-RN152B | |
| 5.1E-008 | 1.16 | NSR-STR-PG-1A | MSS-XHE-XM-ERROR1 |
| | | CVC-MDP-RUNB | NSR-MDP-RUNB |
| | | NSR-MOV-CC-RN9B | |
| 5.1E-008 | 1.16 | NSR-STR-PG-1A | MSS-XHE-XM-ERROR1 |
| | | CVC-MDP-RUNA | NSR-MDP-RUNB |
| | | NSR-MOV-CC-RN152B | |
| 5.1E-008 | 1.16 | NSR-STR-PG-1A | MSS-XHE-XM-ERROR1 |
| | | NSR-MDP-RUNA | CVC-MDP-RUNB |
| | | NSR-MOV-CC-RN152B | |
| 5.1E-008 | 1.16 | NSR-XHE-XR-MDP1B | NSR-STR-PG-1A |
| | | MSS-XHE-XM-ERROR1 | NSR-MDP-RUNA |
| | | CVC-MDP-RUNA | |
| 5.1E-008 | 1.16 | NSR-STR-PG-1A | MSS-XHE-XM-ERROR1 |
| | | NSR-MDP-RUNA | CVC-MDP-RUNA |
| | | NSR-MOV-CC-RN152B | |
| 5.1E-008 | 1.16 | NSR-STR-PG-1A | MSS-XHE-XM-ERROR1 |
| | | NSR-MDP-RUNA | CVC-MDP-RUNA |
| | | NSR-MOV-CC-RN9B | |
| 5.1E-008 | 1.16 | NSR-STR-PG-1A | MSS-XHE-XM-ERROR1 |
| | | CVC-MDP-RUNA | NSR-MDP-RUNB |
| | | NSR-MOV-CC-RN9B | |
| 5.1E-008 | 1.16 | NSR-STR-PG-1A | MSS-XHE-XM-ERROR1 |
| | | NSR-MDP-RUNA | CVC-MDP-RUNB |
| | | NSR-MOV-CC-RN9B | |

Event Tree: SGTR CCDP: 3.4E-006
Sequence: 11

| CCDP | % Cut Set | Cut Set Events | |
|---|---|---|---|
| 4.8E-007 | 14.03 | MSS-VCF-HW-ISOL | NSR-MDP-TM-1B |
| | | NSR-STR-PG-1A | NSR-MDP-RUNA |
| 3.8E-007 | 11.22 | NSR-MDP-TM-1B | NSR-STR-PG-1A |
| | | OPR-XHE-XE-SGTR | NSR-MDP-RUNA |
| 1.2E-007 | 3.51 | MSS-VCF-HW-ISOL | CCW-MDP-TM-MDB |
| | | NSR-STR-PG-1A | NSR-MDP-RUNA |
| 1.0E-007 | 2.92 | MSS-VCF-HW-ISOL | RHR-HTX-TM-HTX1B |
| | | NSR-STR-PG-1A | NSR-MDP-RUNA |
| 9.6E-008 | 2.81 | CCW-MDP-TM-MDB | NSR-STR-PG-1A |
| | | OPR-XHE-XE-SGTR | NSR-MDP-RUNA |
| 8.0E-008 | 2.34 | RHR-HTX-TM-HTX1B | NSR-STR-PG-1A |
| | | OPR-XHE-XE-SGTR | NSR-MDP-RUNA |
| 6.0E-008 | 1.75 | MSS-VCF-HW-ISOL | RHR-FAN-FS-RMB |
| | | NSR-STR-PG-1A | NSR-MDP-RUNA |
| 6.0E-008 | 1.75 | MSS-VCF-HW-ISOL | RHR-FAN-FS-RMB |
| | | NSR-STR-PG-1A | NSR-MDP-RUNB |
| 5.0E-008 | 1.46 | MSS-VCF-HW-ISOL | CCW-HTX-TM-HTX1B |

| | | | |
|---|---|---|---|
| | | NSR-STR-PG-1A | NSR-MDP-RUNA |
| 4.8E-008 | 1.40 | RHR-FAN-FS-RMB | NSR-STR-PG-1A |
| | | OPR-XHE-XE-SGTR | NSR-MDP-RUNA |
| 4.8E-008 | 1.40 | RHR-FAN-FS-RMB | NSR-STR-PG-1A |
| | | OPR-XHE-XE-SGTR | NSR-MDP-RUNB |
| 4.8E-008 | 1.40 | MSS-XHE-XM-ERROR | NSR-MDP-TM-1B |
| | | NSR-STR-PG-1A | NSR-MDP-RUNA |
| 4.0E-008 | 1.17 | MSS-VCF-HW-ISOL | NSR-MDP-FS-1B |
| | | NSR-STR-PG-1A | NSR-MDP-RUNA |
| 4.0E-008 | 1.17 | MSS-VCF-HW-ISOL | RHR-MOV-CC-ND1B |
| 4.0E-008 | 1.17 | CCW-HTX-TM-HTX1B | NSR-STR-PG-1A |
| | | OPR-XHE-XE-SGTR | NSR-MDP-RUNA |
| 4.0E-008 | 1.17 | MSS-VCF-HW-ISOL | RHR-MOV-CC-HOTA |
| 4.0E-008 | 1.17 | MSS-VCF-HW-ISOL | RCS-XHE-XM-ECA312 |
| 4.0E-008 | 1.17 | MSS-VCF-HW-ISOL | RHR-MOV-OO-RWST |

Event Tree: SORV CCDP: 3.1E-006
Sequence: 05

| CCDP | % Cut Set | Cut Set Events | |
|---|---|---|---|
| 1.5E-006 | 48.96 | OPR-XHE-XM-DEPSEC1 | HPR-XHE-XM-RECIRC2 |
| 3.6E-007 | 11.53 | NSR-MDP-TM-1B | NSR-STR-PG-1A |
| | | OPR-XHE-XM-DEPSEC1 | NSR-MDP-RUNA |
| 9.0E-008 | 2.88 | CCW-MDP-TM-MDB | NSR-STR-PG-1A |
| | | OPR-XHE-XM-DEPSEC1 | NSR-MDP-RUNA |
| 7.6E-008 | 2.45 | OPR-XHE-XM-DEPSEC | HPR-XHE-XM-RECIRC1 |
| 7.5E-008 | 2.40 | RHR-HTX-TM-HTX1B | NSR-STR-PG-1A |
| | | OPR-XHE-XM-DEPSEC1 | NSR-MDP-RUNA |
| 4.5E-008 | 1.44 | RHR-FAN-FS-RMB | NSR-STR-PG-1A |
| | | OPR-XHE-XM-DEPSEC1 | NSR-MDP-RUNA |
| 4.5E-008 | 1.44 | RHR-FAN-FS-RMB | NSR-STR-PG-1A |
| | | OPR-XHE-XM-DEPSEC1 | NSR-MDP-RUNB |
| 3.8E-008 | 1.20 | CCW-HTX-TM-HTX1B | NSR-STR-PG-1A |
| | | OPR-XHE-XM-DEPSEC1 | NSR-MDP-RUNA |

Event Tree: SGTR CCDP: 2.1E-006
Sequence: 20

| CCDP | % Cut Set | Cut Set Events | |
|---|---|---|---|
| 3.4E-007 | 16.06 | AFW-TDP-FS-TDP | NSR-MDP-TM-1B |
| | | NSR-STR-PG-1A | NSR-MDP-RUNA |
| 2.4E-007 | 11.47 | AFW-TDP-TM-TDP | NSR-MDP-TM-1B |
| | | NSR-STR-PG-1A | NSR-MDP-RUNA |
| 2.0E-007 | 9.42 | AFW-TDP-FR-TDP | NSR-MDP-TM-1B |
| | | NSR-STR-PG-1A | NSR-MDP-RUNA |
| 2.8E-008 | 1.34 | AFW-TDP-FS-TDP | NSR-MDP-FS-1B |
| | | NSR-STR-PG-1A | NSR-MDP-RUNA |
| 2.1E-008 | 1.00 | AFW-TDP-FS-TDP | CCW-MDP-TM-MDB |
| | | NSR-STR-PG-1A | NSR-MDP-RUNA |
| | | SGTR-1C | |

2008/06/19 10:39:07 page 10

| | | | |
|---|---|---|---|
| 2.1E-008 | 1.00 | AFW-TDP-FS-TDP<br>NSR-STR-PG-1A<br>SGTR-1D | CCW-MDP-TM-MDB<br>NSR-MDP-RUNA |

Event Tree: SORV CCDP: 1.9E-006
Sequence: 11

| CCDP | % Cut Set | Cut Set Events | |
|---|---|---|---|
| 7.2E-007 | 37.51 | NSR-MDP-TM-1B<br>OPR-XHE-XM-DEPRCS1<br>CVC-MDP-RUNA | NSR-STR-PG-1A<br>NSR-MDP-RUNA |
| 7.2E-007 | 37.51 | NSR-MDP-TM-1B<br>OPR-XHE-XM-DEPRCS1<br>CVC-MDP-RUNB | NSR-STR-PG-1A<br>NSR-MDP-RUNA |
| 6.0E-008 | 3.13 | NSR-MDP-FS-1B<br>OPR-XHE-XM-DEPRCS1<br>CVC-MDP-RUNB | NSR-STR-PG-1A<br>NSR-MDP-RUNA |
| 6.0E-008 | 3.13 | NSR-MDP-FS-1B<br>OPR-XHE-XM-DEPRCS1<br>CVC-MDP-RUNA | NSR-STR-PG-1A<br>NSR-MDP-RUNA |
| 3.0E-008 | 1.56 | NSR-STR-PG-1A<br>NSR-MDP-RUNA<br>NSR-MOV-CC-RN152B | OPR-XHE-XM-DEPRCS1<br>CVC-MDP-RUNB |
| 3.0E-008 | 1.56 | NSR-STR-PG-1A<br>NSR-MDP-RUNA<br>NSR-MOV-CC-RN9B | OPR-XHE-XM-DEPRCS1<br>CVC-MDP-RUNB |
| 3.0E-008 | 1.56 | NSR-STR-PG-1A<br>CVC-MDP-RUNA<br>NSR-MOV-CC-RN9B | OPR-XHE-XM-DEPRCS1<br>NSR-MDP-RUNB |
| 3.0E-008 | 1.56 | NSR-STR-PG-1A<br>NSR-MDP-RUNA<br>NSR-MOV-CC-RN152B | OPR-XHE-XM-DEPRCS1<br>CVC-MDP-RUNA |
| 3.0E-008 | 1.56 | NSR-XHE-XR-MDP1B<br>OPR-XHE-XM-DEPRCS1<br>CVC-MDP-RUNA | NSR-STR-PG-1A<br>NSR-MDP-RUNA |
| 3.0E-008 | 1.56 | NSR-STR-PG-1A<br>CVC-MDP-RUNA<br>NSR-MOV-CC-RN152B | OPR-XHE-XM-DEPRCS1<br>NSR-MDP-RUNB |
| 3.0E-008 | 1.56 | NSR-STR-PG-1A<br>CVC-MDP-RUNB<br>NSR-MOV-CC-RN9B | OPR-XHE-XM-DEPRCS1<br>NSR-MDP-RUNB |
| 3.0E-008 | 1.56 | NSR-XHE-XR-MDP1B<br>OPR-XHE-XM-DEPRCS1<br>CVC-MDP-RUNB | NSR-STR-PG-1A<br>NSR-MDP-RUNA |
| 3.0E-008 | 1.56 | NSR-STR-PG-1A<br>CVC-MDP-RUNB<br>NSR-MOV-CC-RN152B | OPR-XHE-XM-DEPRCS1<br>NSR-MDP-RUNB |
| 3.0E-008 | 1.56 | NSR-STR-PG-1A<br>NSR-MDP-RUNA<br>NSR-MOV-CC-RN9B | OPR-XHE-XM-DEPRCS1<br>CVC-MDP-RUNA |

2008/06/19 10:39:07 page 11

Event Tree: SGTR CCDP: 1.8E-006
Sequence: 22

| CCDP | % Cut Set | Cut Set Events | |
|---|---|---|---|
| 1.7E-007 | 9.24 | AFW-TDP-FS-TDP | NSR-MDP-TM-1B |
| | | NSR-STR-PG-1A | NSR-MDP-RUNA |
| | | CVC-MDP-RUNA | |
| 1.7E-007 | 9.24 | AFW-TDP-FS-TDP | NSR-MDP-TM-1B |
| | | NSR-STR-PG-1A | NSR-MDP-RUNA |
| | | CVC-MDP-RUNB | |
| 1.2E-007 | 6.60 | AFW-TDP-TM-TDP | NSR-MDP-TM-1B |
| | | NSR-STR-PG-1A | NSR-MDP-RUNA |
| | | CVC-MDP-RUNB | |
| 1.2E-007 | 6.60 | AFW-TDP-TM-TDP | NSR-MDP-TM-1B |
| | | NSR-STR-PG-1A | NSR-MDP-RUNA |
| | | CVC-MDP-RUNA | |
| 9.9E-008 | 5.42 | AFW-TDP-FR-TDP | NSR-MDP-TM-1B |
| | | NSR-STR-PG-1A | NSR-MDP-RUNA |
| | | CVC-MDP-RUNA | |
| 9.9E-008 | 5.42 | AFW-TDP-FR-TDP | NSR-MDP-TM-1B |
| | | NSR-STR-PG-1A | NSR-MDP-RUNA |
| | | CVC-MDP-RUNB | |
| 7.0E-008 | 3.85 | HPI-XHE-XM-FB | AFW-TDP-FS-TDP |
| | | NSR-STR-PG-1A | NSR-MDP-RUNA |
| | | SGTR-1D | |
| 7.0E-008 | 3.85 | HPI-XHE-XM-FB | AFW-TDP-FS-TDP |
| | | NSR-STR-PG-1A | NSR-MDP-RUNA |
| | | SGTR-1C | |
| 7.0E-008 | 3.85 | HPI-XHE-XM-FB | AFW-TDP-FS-TDP |
| | | NSR-STR-PG-1A | NSR-MDP-RUNB |
| | | SGTR-1C | |
| 7.0E-008 | 3.85 | HPI-XHE-XM-FB | AFW-TDP-FS-TDP |
| | | NSR-STR-PG-1A | NSR-MDP-RUNB |
| | | SGTR-1D | |
| 5.0E-008 | 2.75 | HPI-XHE-XM-FB | AFW-TDP-TM-TDP |
| | | NSR-STR-PG-1A | NSR-MDP-RUNB |
| | | SGTR-1D | |
| 5.0E-008 | 2.75 | HPI-XHE-XM-FB | AFW-TDP-TM-TDP |
| | | NSR-STR-PG-1A | NSR-MDP-RUNA |
| | | SGTR-1D | |
| 5.0E-008 | 2.75 | HPI-XHE-XM-FB | AFW-TDP-TM-TDP |
| | | NSR-STR-PG-1A | NSR-MDP-RUNA |
| | | SGTR-1C | |
| 5.0E-008 | 2.75 | HPI-XHE-XM-FB | AFW-TDP-TM-TDP |
| | | NSR-STR-PG-1A | NSR-MDP-RUNB |
| | | SGTR-1C | |
| 4.1E-008 | 2.26 | HPI-XHE-XM-FB | AFW-TDP-FR-TDP |
| | | NSR-STR-PG-1A | NSR-MDP-RUNA |
| | | SGTR-1C | |
| 4.1E-008 | 2.26 | HPI-XHE-XM-FB | AFW-TDP-FR-TDP |

2008/06/19 10:39:07 page 12

```
                                NSR-STR-PG-1A            NSR-MDP-RUNB
                                SGTR-1C
  4.1E-008          2.26        HPI-XHE-XM-FB            AFW-TDP-FR-TDP
                                NSR-STR-PG-1A            NSR-MDP-RUNA
                                SGTR-1D
  4.1E-008          2.26        HPI-XHE-XM-FB            AFW-TDP-FR-TDP
                                NSR-STR-PG-1A            NSR-MDP-RUNB
                                SGTR-1D
```

---

BASIC EVENTS (Cut Sets Only)

| Event Name | Description | Curr Prob |
|---|---|---|
| AFW-TDP-FR-TDP | AFW TURBINE DRIVEN PUMP FAILS TO RUN | 4.1E-003 |
| AFW-TDP-FS-TDP | AFW TURBINE DRIVEN PUMP FAILS TO START | 7.0E-003 |
| AFW-TDP-TM-TDP | AFW TDP UNAVAILABLE DUE TO TEST AND MAINTENAN | 5.0E-003 |
| CCW-HTX-TM-HTX1B | CCW HTX-1B UNAVAILABLE DUE TO T & M | 2.5E-003 |
| CCW-MDP-FS-1B1 | CCW MDP-1B1 FAILS TO START | 2.0E-003 |
| CCW-MDP-FS-1B2 | CCW MDP-1B2 FAILS TO START | 2.0E-003 |
| CCW-MDP-RUNA1A2 | FRACTION OF TIME CCW MDP 1A1 AND 1A2 ARE INIT | 5.0E-001 |
| CCW-MDP-TM-MDB | CCW MDPS 1B1/1B2 UNAVAILABLE DUE TO T & M | 6.0E-003 |
| CCW-MOV-CC-KC81B | FAILURE OF CCW MOV KC81B TO RHR HTX-B | 1.0E-003 |
| CCW-MOV-OO-KC2B | FAILURE OF CCW AUX BLDG HDR MOV KC2B TO CLOSE | 1.0E-003 |
| CCW-MOV-OO-KC53B | FAILURE OF CCW AUX BLDG HDR MOV KC53B TO CLOS | 1.0E-003 |
| CCW-XHE-XR-HTX1B | OPERATOR FAILS TO RESTORE CCW HTX-1B AFTER T | 1.0E-003 |
| CVC-MDP-RUNA | FRACTION OF TIME CVC MDP TRAIN A IS RUNNING | 5.0E-001 |
| CVC-MDP-RUNB | FRACTION OF TIME CVC MDP TRAIN B IS RUNNING | 5.0E-001 |
| HPI-XHE-XM-FB | OPERATOR FAILS TO INITIATE FEED AND BLEED COO | 2.0E-002 |
| HPR-MOV-CC-184B | SUMP RECIRCULATION MOV 184B FAILS | 1.0E-003 |
| HPR-XHE-XM-RECIRC1 | OPERATOR FAILS TO INITIATE HPR (DEPENDENT) | 5.1E-002 |
| HPR-XHE-XM-RECIRC2 | OPERATOR FAILS TO INITIATE HPR (DEPENDENT) | 5.1E-002 |
| MSS-VCF-HW-ISOL | SG ISOLATION FAILS BECAUSE OF HARDWARE FAULTS | 1.0E-002 |
| MSS-XHE-XM-ERROR | OPERATOR FAILS TO ISOLATE FAULTED STEAM GENER | 1.0E-003 |
| MSS-XHE-XM-ERROR1 | OPERATOR FAILS TO ISOLATE FAULTED STEAM GENER | 5.1E-002 |
| NSR-MDP-FS-1B | NSR MDP-1B FAILS TO START | 2.0E-003 |
| NSR-MDP-RUNA | FRACTION OF TIME NSR MDP TRAIN A IS RUNNING | 5.0E-001 |
| NSR-MDP-RUNB | FRACTION OF TIME NSR MDP TRAIN B IS RUNNING | 5.0E-001 |
| NSR-MDP-TM-1B | NSR MDP-1B UNAVAILABLE DUE TO T & M | 2.4E-002 |
| NSR-MOV-CC-RN152B | FAILURE TO OPEN NSR PUMP B SNSWP DISCHARGE MO | 1.0E-003 |
| NSR-MOV-CC-RN9B | FAILURE TO OPEN NSR PUMP B SNSWP SUCTION MOV | 1.0E-003 |
| NSR-STR-PG-1A | FAILURE OF NSR MDP-1A STRAINER | 1.0E+000 |
| NSR-XHE-XR-MDP1B | OPERATOR FAILS TO RESTORE NSR MDP-1B AFTER T | 1.0E-003 |
| OPR-XHE-XE-SGTR | OPERATOR FAILS TO DIAGNOSE SGTR AND START PRO | 8.0E-003 |
| OPR-XHE-XM-DEPRCS1 | OPERATOR FAILS TO RAPIDLY DEPRESSURIZE RCS | 4.0E-002 |
| OPR-XHE-XM-DEPSEC | OPERATOR FAILS TO INITIATE SECONDARY SIDE COO | 5.0E-004 |
| OPR-XHE-XM-DEPSEC1 | FAILURE TO INITIATE SECONDARY SIDE COOLDOWN ( | 1.0E-002 |
| RCS-XHE-XM-ECA312 | FAILURE OF OPERATOR TO IMPLEMENT SGTR PROCEDU | 1.0E-003 |
| RHR-AOV-CC-231B | FAILURE OF RHR MDP-1B ROOM COOLING INLET AOV | 1.2E-003 |
| RHR-FAN-FS-RMB | FAILURE OF RHR MDP-1B RM COOLING FAN TO START | 3.0E-003 |
| RHR-HTX-TM-HTX1B | RHR HTX-1B UNAVAILABLE DUE TO T & M | 5.0E-003 |
| RHR-MDP-FS-1B | RHR MDP 1B FAILS TO START | 1.5E-003 |

| Event Name | Description | Curr Prob |
|---|---|---|
| RHR-MOV-CC-HOTA | RHR HOT LEG SUCTION MOV A FAILS | 1.0E-003 |
| RHR-MOV-CC-ND1B | RHR HOT LEG SUCTION MOV ND1B FAILS | 1.0E-003 |
| RHR-MOV-OO-4B | RHR RWST ISOLATION MOV 4B FAILS | 1.0E-003 |
| RHR-MOV-OO-67B | RHR MDP B MIN-FLOW VALVE 67BA FAILS TO OPEN | 1.0E-003 |
| RHR-MOV-OO-RWST | ISOLATION VALVE TO RWST FAIL TO CLOSE | 1.0E-003 |
| RHR-XHE-XR-HTX1B | OPERATOR FAILS TO RESTORE RHR HTX-1B AFTER T | 1.0E-003 |
| RHR-XHE-XR-MDP1B | OPERATOR FAILS TO RESTORE RHR MDP 1B AFTER T | 1.0E-003 |
| SGTR-1C | SGTR EVENT HAS OCCURRED IN SG-1C | 2.5E-001 |
| SGTR-1D | SGTR EVENT HAS OCCURRED IN SG-1D | 2.5E-001 |

# ATTACHMENT I – SLICE SEALLOCA SEQUENCES ALL INITIATIORS EXCEPT SIs W/ LOSS OF 'A' TRAIN

Project : MCGU_3P **TOP50 SEALLOCA W/O TRAIN A NSW** Min Cut Upper Bound: 7.430E-004 **Slice Applied** This Partition: 1.594E-004

SLICE SELECTION CRITERIA ->OR RCS-MDP-LK-BP1, RCS-MDP-LK-BP2, RCS-MDP-LK-O1 RCS-MDP-LK-O2

| Cut No. | % Total | % Cut Set | Prob./Frequency | Basic Event | Description | Event Prob. |
|---|---|---|---|---|---|---|
| 1 | 1.45 | 1.45 | 1.080E-005 | IE-LOACA | Loss of vital ac Bus 1A initiating event | 9.000E-003 |
| | | | | CVC-MDP-RUNA | Fraction of time CVC MDP train A is running | 5.000E-001 |
| | | | | NSR-MDP-RUNA | FRACTION OF TIME NSR MDP TRAIN A IS RUNNING | 5.000E-001 |
| | | | | NSR-MDP-TM-1B | NSR MDP-1B UNAVAILABLE DUE TO T & M | 2.400E-002 |
| | | | | NSR-XHE-XL-NSRSYSL | FAILURE TO RECOVER NSR (RN) VIA X-TIE TO U2 FOR RCP SEALS | 1.000E+000 |
| | | | | RCS-MDP-LK-BP2 | RCP SEAL STAGE 2 INTEGRITY (BINDING/POPPI NG OPEN) FAILS | 2.000E-001 |
| 2 | 2.90 | 1.45 | 1.080E-005 | IE-LOACA | Loss of vital ac Bus 1A initiating event | 9.000E-003 |
| | | | | CVC-MDP-RUNB | Fraction of time CVC MDP train B is running | 5.000E-001 |
| | | | | NSR-MDP-RUNA | FRACTION OF TIME NSR MDP TRAIN A IS RUNNING | 5.000E-001 |
| | | | | NSR-MDP-TM-1B | NSR MDP-1B UNAVAILABLE DUE TO T & M | 2.400E-002 |
| | | | | NSR-XHE-XL-NSRSYSL | FAILURE TO RECOVER NSR (RN) VIA X-TIE TO U2 FOR RCP SEALS | 1.000E+000 |
| | | | | RCS-MDP-LK-BP2 | RCP SEAL STAGE 2 INTEGRITY (BINDING/POPPI NG OPEN) FAILS | 2.000E-001 |
| 3 | 3.55 | 0.65 | 4.818E-006 | IE-LOOP | LOSS OF OFFSITE POWER | 3.590E-002 |
| | | | | DUAL-UNIT-LOOP | Probability that a LOOP is a Dual Unit LOOP | 5.820E-001 |
| | | | | EPS-DGN-FR-1B | DIESEL GENERATOR 1B FAILS TO RUN | 2.411E-002 |
| | | | | EPS-XHE-XL-NR03H | OPERATOR FAILS TO RECOVER EMERGENCY DIESEL IN 3 HOURS | 5.563E-001 |
| | | | | NSR-STR-PG-1A | FAILURE OF NSR MDP-1A STRAINER | 1.000E+000 |
| | | | | OEP-XHE-XL-NR03H | OPERATOR FAILS TO RECOVER OFFSITE POWER IN 3 HOURS | 2.149E-001 |
| | | | | /RCS-MDP-LK-BP2 | RCP SEAL STAGE 2 INTEGRITY (BINDING/POPPI NG OPEN) FAILS | 8.000E-001 |
| | | | | SSF-XHE-XM-SYSL | OPERATOR FAILS TO START AND ALIGN SSF DURING LOOP | 1.000E-001 |
| 4 | 4.08 | 0.53 | 3.937E-006 | IE-LOOP | LOSS OF OFFSITE POWER | 3.590E-002 |
| | | | | DUAL-UNIT-LOOP | Probability that a LOOP is a Dual Unit LOOP | 5.820E-001 |
| | | | | NSR-MDP-RUNA | FRACTION OF TIME NSR MDP TRAIN A IS RUNNING | 5.000E-001 |
| | | | | NSR-MDP-TM-1B | NSR MDP-1B UNAVAILABLE DUE TO T & M | 2.400E-002 |
| | | | | NSR-STR-PG-1A | FAILURE OF NSR MDP-1A STRAINER | 1.000E+000 |
| | | | | /OEP-XHE-XL-NR03H | OPERATOR FAILS TO RECOVER OFFSITE POWER IN 3 HOURS | 7.851E-001 |
| | | | | RCS-MDP-LK-BP2 | RCP SEAL STAGE 2 INTEGRITY (BINDING/POPPI NG OPEN) FAILS | 2.000E-001 |
| | | | | SSF-XHE-XM-SYSL | OPERATOR FAILS TO START AND ALIGN SSF DURING LOOP | 1.000E-001 |
| 5 | 4.48 | 0.40 | 2.938E-006 | IE-LOOP | LOSS OF OFFSITE POWER | 3.590E-002 |
| | | | | CVC-MDP-RUNB | Fraction of time CVC MDP train B is running | 5.000E-001 |
| | | | | NSR-MDP-RUNA | FRACTION OF TIME NSR MDP TRAIN A IS RUNNING | 5.000E-001 |
| | | | | NSR-MDP-TM-1B | NSR MDP-1B UNAVAILABLE DUE TO T & M | 2.400E-002 |
| | | | | NSR-STR-PG-1A | FAILURE OF NSR MDP-1A STRAINER | 1.000E+000 |
| | | | | NSR-XHE-XL-NSRSYSL | FAILURE TO RECOVER NSR (RN) VIA X-TIE TO U2 FOR RCP SEALS | 1.000E+000 |

Project : MCGU_3P **TOP50 SEALLOCA W/O TRAIN A NSW** Min Cut Upper Bound: 7.430E-004 **Slice Applied** This Partition: 1.594E-004

| Cut No. | % Total | % Cut Set | Prob./Frequency | Basic Event | Description | Event Prob. |
|---|---|---|---|---|---|---|
| | | | | /OEP-XHE-XL-NR02H | OPERATOR FAILS TO RECOVER OFFSITE POWER IN 2 HOURS | 6.819E-001 |
| | | | | RCS-MDP-LK-BP2 | RCP SEAL STAGE 2 INTEGRITY (BINDING/POPPI NG OPEN) FAILS | 2.000E-001 |
| | | | | SSF-XHE-XM-SYSL | OPERATOR FAILS TO START AND ALIGN SSF DURING LOOP | 1.000E-001 |
| 6 | 4.88 | 0.40 | 2.938E-006 | IE-LOOP | LOSS OF OFFSITE POWER | 3.590E-002 |
| | | | | CVC-MDP-RUNA | Fraction of time CVC MDP train A is running | 5.000E-001 |
| | | | | NSR-MDP-RUNA | FRACTION OF TIME NSR MDP TRAIN A IS RUNNING | 5.000E-001 |
| | | | | NSR-MDP-TM-1B | NSR MDP-1B UNAVAILABLE DUE TO T & M | 2.400E-002 |
| | | | | NSR-STR-PG-1A | FAILURE OF NSR MDP-1A STRAINER | 1.000E+000 |
| | | | | NSR-XHE-XL-NSRSYSL | FAILURE TO RECOVER NSR (RN) VIA X-TIE TO U2 FOR RCP SEALS | 1.000E+000 |
| | | | | /OEP-XHE-XL-NR02H | OPERATOR FAILS TO RECOVER OFFSITE POWER IN 2 HOURS | 6.819E-001 |
| | | | | RCS-MDP-LK-BP2 | RCP SEAL STAGE 2 INTEGRITY (BINDING/POPPI NG OPEN) FAILS | 2.000E-001 |
| | | | | SSF-XHE-XM-SYSL | OPERATOR FAILS TO START AND ALIGN SSF DURING LOOP | 1.000E-001 |
| 7 | 5.27 | 0.39 | 2.880E-006 | IE-TRANS | TRANSIENT | 8.000E-001 |
| | | | | CVC-MDP-RUNB | Fraction of time CVC MDP train B is running | 5.000E-001 |
| | | | | NSR-MDP-RUNA | FRACTION OF TIME NSR MDP TRAIN A IS RUNNING | 5.000E-001 |
| | | | | NSR-MDP-TM-1B | NSR MDP-1B UNAVAILABLE DUE TO T & M | 2.400E-002 |
| | | | | NSR-STR-PG-1A | FAILURE OF NSR MDP-1A STRAINER | 1.000E+000 |
| | | | | NSR-XHE-XL-NSRSYSL | FAILURE TO RECOVER NSR (RN) VIA X-TIE TO U2 FOR RCP SEALS | 1.000E+000 |
| | | | | RCS-MDP-LK-BP2 | RCP SEAL STAGE 2 INTEGRITY (BINDING/POPPI NG OPEN) FAILS | 2.000E-001 |
| | | | | SSF-PDP-TM-SYS | SSF PDP SYSTEM UNAVAILABLE DUE TO TEST AND MAINTENANCE | 3.000E-003 |
| 8 | 5.66 | 0.39 | 2.880E-006 | IE-TRANS | TRANSIENT | 8.000E-001 |
| | | | | CVC-MDP-RUNA | Fraction of time CVC MDP train A is running | 5.000E-001 |
| | | | | NSR-MDP-RUNA | FRACTION OF TIME NSR MDP TRAIN A IS RUNNING | 5.000E-001 |
| | | | | NSR-MDP-TM-1B | NSR MDP-1B UNAVAILABLE DUE TO T & M | 2.400E-002 |
| | | | | NSR-STR-PG-1A | FAILURE OF NSR MDP-1A STRAINER | 1.000E+000 |
| | | | | NSR-XHE-XL-NSRSYSL | FAILURE TO RECOVER NSR (RN) VIA X-TIE TO U2 FOR RCP SEALS | 1.000E+000 |
| | | | | RCS-MDP-LK-BP2 | RCP SEAL STAGE 2 INTEGRITY (BINDING/POPPI NG OPEN) FAILS | 2.000E-001 |
| | | | | SSF-PDP-TM-SYS | SSF PDP SYSTEM UNAVAILABLE DUE TO TEST AND MAINTENANCE | 3.000E-003 |
| 9 | 6.05 | 0.39 | 2.880E-006 | IE-TRANS | TRANSIENT | 8.000E-001 |
| | | | | CVC-MDP-RUNB | Fraction of time CVC MDP train B is running | 5.000E-001 |
| | | | | NSR-MDP-RUNA | FRACTION OF TIME NSR MDP TRAIN A IS RUNNING | 5.000E-001 |
| | | | | NSR-MDP-TM-1B | NSR MDP-1B UNAVAILABLE DUE TO T & M | 2.400E-002 |
| | | | | NSR-STR-PG-1A | FAILURE OF NSR MDP-1A STRAINER | 1.000E+000 |
| | | | | NSR-XHE-XL-NSRSYSL | FAILURE TO RECOVER NSR (RN) VIA X-TIE TO U2 FOR RCP SEALS | 1.000E+000 |
| | | | | RCS-MDP-LK-BP2 | RCP SEAL STAGE 2 INTEGRITY (BINDING/POPPI NG OPEN) FAILS | 2.000E-001 |
| | | | | SSF-PDP-FS-SYS | FAILURE OF SSF MAKE-UP PDP TRAIN TO START | 3.000E-003 |

Project : MCGU_3P **TOP50 SEALLOCA W/O TRAIN A NSW** Min Cut Upper Bound: 7.430E-004 **Slice Applied** This Partition: 1.594E-004

| Cut No. | % Total | % Cut Set | Prob./Frequency | Basic Event | Description | Event Prob. |
|---|---|---|---|---|---|---|
| 10 | 6.44 | 0.39 | 2.880E-006 | IE-TRANS | TRANSIENT | 8.000E-001 |
| | | | | CVC-MDP-RUNA | Fraction of time CVC MDP train A is running | 5.000E-001 |
| | | | | NSR-MDP-RUNA | FRACTION OF TIME NSR MDP TRAIN A IS RUNNING | 5.000E-001 |
| | | | | NSR-MDP-TM-1B | NSR MDP-1B UNAVAILABLE DUE TO T & M | 2.400E-002 |
| | | | | NSR-STR-PG-1A | FAILURE OF NSR MDP-1A STRAINER | 1.000E+000 |
| | | | | NSR-XHE-XL-NSRSYSL | FAILURE TO RECOVER NSR (RN) VIA X-TIE TO U2 FOR RCP SEALS | 1.000E+000 |
| | | | | RCS-MDP-LK-BP2 | RCP SEAL STAGE 2 INTEGRITY (BINDING/POPPI NG OPEN) FAILS | 2.000E-001 |
| | | | | SSF-PDP-FS-SYS | FAILURE OF SSF MAKE-UP PDP TRAIN TO START | 3.000E-003 |
| 11 | 6.77 | 0.33 | 2.485E-006 | IE-TRANS | TRANSIENT | 8.000E-001 |
| | | | | CVC-MDP-RUNA | Fraction of time CVC MDP train A is running | 5.000E-001 |
| | | | | NSR-MDP-RUNA | FRACTION OF TIME NSR MDP TRAIN A IS RUNNING | 5.000E-001 |
| | | | | NSR-MDP-TM-1B | NSR MDP-1B UNAVAILABLE DUE TO T & M | 2.400E-002 |
| | | | | NSR-STR-PG-1A | FAILURE OF NSR MDP-1A STRAINER | 1.000E+000 |
| | | | | NSR-XHE-XL-NSRSYSL | FAILURE TO RECOVER NSR (RN) VIA X-TIE TO U2 FOR RCP SEALS | 1.000E+000 |
| | | | | RCS-MDP-LK-BP2 | RCP SEAL STAGE 2 INTEGRITY (BINDING/POPPI NG OPEN) FAILS | 2.000E-001 |
| | | | | SSF-ACX-FR-SSF2 | FAILURE OF SSF AHU FAN #2 TO RUN | 2.589E-003 |
| 12 | 7.10 | 0.33 | 2.485E-006 | IE-TRANS | TRANSIENT | 8.000E-001 |
| | | | | CVC-MDP-RUNB | Fraction of time CVC MDP train B is running | 5.000E-001 |
| | | | | NSR-MDP-RUNA | FRACTION OF TIME NSR MDP TRAIN A IS RUNNING | 5.000E-001 |
| | | | | NSR-MDP-TM-1B | NSR MDP-1B UNAVAILABLE DUE TO T & M | 2.400E-002 |
| | | | | NSR-STR-PG-1A | FAILURE OF NSR MDP-1A STRAINER | 1.000E+000 |
| | | | | NSR-XHE-XL-NSRSYSL | FAILURE TO RECOVER NSR (RN) VIA X-TIE TO U2 FOR RCP SEALS | 1.000E+000 |
| | | | | RCS-MDP-LK-BP2 | RCP SEAL STAGE 2 INTEGRITY (BINDING/POPPI NG OPEN) FAILS | 2.000E-001 |
| | | | | SSF-ACX-FR-SSF2 | FAILURE OF SSF AHU FAN #2 TO RUN | 2.589E-003 |
| 13 | 7.42 | 0.32 | 2.398E-006 | IE-LOOP | LOSS OF OFFSITE POWER | 3.590E-002 |
| | | | | DUAL-UNIT-LOOP | Probability that a LOOP is a Dual Unit LOOP | 5.820E-001 |
| | | | | EPS-XHE-XL-NR03H | OPERATOR FAILS TO RECOVER EMERGENCY DIESEL IN 3 HOURS | 5.563E-001 |
| | | | | NSR-MDP-RUNA | FRACTION OF TIME NSR MDP TRAIN A IS RUNNING | 5.000E-001 |
| | | | | NSR-MDP-TM-1B | NSR MDP-1B UNAVAILABLE DUE TO T & M | 2.400E-002 |
| | | | | NSR-STR-PG-1A | FAILURE OF NSR MDP-1A STRAINER | 1.000E+000 |
| | | | | OEP-XHE-XL-NR03H | OPERATOR FAILS TO RECOVER OFFSITE POWER IN 3 HOURS | 2.149E-001 |
| | | | | /RCS-MDP-LK-BP2 | RCP SEAL STAGE 2 INTEGRITY (BINDING/POPPI NG OPEN) FAILS | 8.000E-001 |
| | | | | SSF-XHE-XM-SYSL | OPERATOR FAILS TO START AND ALIGN SSF DURING LOOP | 1.000E-001 |
| 14 | 7.74 | 0.32 | 2.398E-006 | IE-LOOP | LOSS OF OFFSITE POWER | 3.590E-002 |
| | | | | DUAL-UNIT-LOOP | Probability that a LOOP is a Dual Unit LOOP | 5.820E-001 |
| | | | | EPS-DGN-TM-1B | DIESEL GENERATOR 1B UNAVAILABLE DUE TO TEST AND MAINTENANCE | 1.200E-002 |

Project : MCGU_3P **TOP50 SEALLOCA W/O TRAIN A NSW** Min Cut Upper Bound: 7.430E-004 **Slice Applied** This Partition: 1.594E-004

| Cut No. | % Total | % Cut Set | Prob./Frequency | Basic Event | Description | Event Prob. |
|---|---|---|---|---|---|---|
| | | | | EPS-XHE-XL-NR03H | OPERATOR FAILS TO RECOVER EMERGENCY DIESEL IN 3 HOURS | 5.563E-001 |
| | | | | NSR-STR-PG-1A | FAILURE OF NSR MDP-1A STRAINER | 1.000E+000 |
| | | | | OEP-XHE-XL-NR03H | OPERATOR FAILS TO RECOVER OFFSITE POWER IN 3 HOURS | 2.149E-001 |
| | | | | /RCS-MDP-LK-BP2 | RCP SEAL STAGE 2 INTEGRITY (BINDING/POPPI NG OPEN) FAILS | 8.000E-001 |
| | | | | SSF-XHE-XM-SYSL | OPERATOR FAILS TO START AND ALIGN SSF DURING LOOP | 1.000E-001 |
| 15 | 8.00 | 0.26 | 1.969E-006 | IE-LOOP | LOSS OF OFFSITE POWER | 3.590E-002 |
| | | | | CVC-MDP-RUNA | Fraction of time CVC MDP train A is running | 5.000E-001 |
| | | | | DUAL-UNIT-LOOP | Probability that a LOOP is a Dual Unit LOOP | 5.820E-001 |
| | | | | NSR-MDP-RUNA | FRACTION OF TIME NSR MDP TRAIN A IS RUNNING | 5.000E-001 |
| | | | | NSR-MDP-TM-1B | NSR MDP-1B UNAVAILABLE DUE TO T & M | 2.400E-002 |
| | | | | NSR-STR-PG-1A | FAILURE OF NSR MDP-1A STRAINER | 1.000E+000 |
| | | | | /OEP-XHE-XL-NR03H | OPERATOR FAILS TO RECOVER OFFSITE POWER IN 3 HOURS | 7.851E-001 |
| | | | | RCS-MDP-LK-BP2 | RCP SEAL STAGE 2 INTEGRITY (BINDING/POPPI NG OPEN) FAILS | 2.000E-001 |
| | | | | SSF-XHE-XM-SYSL | OPERATOR FAILS TO START AND ALIGN SSF DURING LOOP | 1.000E-001 |
| 16 | 8.26 | 0.26 | 1.969E-006 | IE-LOOP | LOSS OF OFFSITE POWER | 3.590E-002 |
| | | | | CVC-MDP-RUNB | Fraction of time CVC MDP train B is running | 5.000E-001 |
| | | | | DUAL-UNIT-LOOP | Probability that a LOOP is a Dual Unit LOOP | 5.820E-001 |
| | | | | NSR-MDP-RUNA | FRACTION OF TIME NSR MDP TRAIN A IS RUNNING | 5.000E-001 |
| | | | | NSR-MDP-TM-1B | NSR MDP-1B UNAVAILABLE DUE TO T & M | 2.400E-002 |
| | | | | NSR-STR-PG-1A | FAILURE OF NSR MDP-1A STRAINER | 1.000E+000 |
| | | | | /OEP-XHE-XL-NR03H | OPERATOR FAILS TO RECOVER OFFSITE POWER IN 3 HOURS | 7.851E-001 |
| | | | | RCS-MDP-LK-BP2 | RCP SEAL STAGE 2 INTEGRITY (BINDING/POPPI NG OPEN) FAILS | 2.000E-001 |
| | | | | SSF-XHE-XM-SYSL | OPERATOR FAILS TO START AND ALIGN SSF DURING LOOP | 1.000E-001 |
| 17 | 8.44 | 0.18 | 1.370E-006 | IE-LOOP | LOSS OF OFFSITE POWER | 3.590E-002 |
| | | | | CVC-MDP-RUNA | Fraction of time CVC MDP train A is running | 5.000E-001 |
| | | | | NSR-MDP-RUNA | FRACTION OF TIME NSR MDP TRAIN A IS RUNNING | 5.000E-001 |
| | | | | NSR-MDP-TM-1B | NSR MDP-1B UNAVAILABLE DUE TO T & M | 2.400E-002 |
| | | | | NSR-STR-PG-1A | FAILURE OF NSR MDP-1A STRAINER | 1.000E+000 |
| | | | | NSR-XHE-XL-NSRSYSL | FAILURE TO RECOVER NSR (RN) VIA X-TIE TO U2 FOR RCP SEALS | 1.000E+000 |
| | | | | OEP-XHE-XL-NR02H | OPERATOR FAILS TO RECOVER OFFSITE POWER IN 2 HOURS | 3.181E-001 |
| | | | | RCS-MDP-LK-BP2 | RCP SEAL STAGE 2 INTEGRITY (BINDING/POPPI NG OPEN) FAILS | 2.000E-001 |
| | | | | SSF-XHE-XM-SYSL | OPERATOR FAILS TO START AND ALIGN SSF DURING LOOP | 1.000E-001 |
| 18 | 8.62 | 0.18 | 1.370E-006 | IE-LOOP | LOSS OF OFFSITE POWER | 3.590E-002 |
| | | | | CVC-MDP-RUNB | Fraction of time CVC MDP train B is running | 5.000E-001 |
| | | | | NSR-MDP-RUNA | FRACTION OF TIME NSR MDP TRAIN A IS RUNNING | 5.000E-001 |
| | | | | NSR-MDP-TM-1B | NSR MDP-1B UNAVAILABLE DUE TO T & M | 2.400E-002 |

Project : MCGU_3P **TOP50 SEALLOCA W/O TRAIN A NSW** Min Cut Upper Bound: 7.430E-004 **Slice Applied** This Partition: 1.594E-004

| Cut No. | % Total | % Cut Set | Prob./Frequency | Basic Event | Description | Event Prob. |
|---|---|---|---|---|---|---|
| | | | | NSR-STR-PG-1A | FAILURE OF NSR MDP-1A STRAINER | 1.000E+000 |
| | | | | NSR-XHE-XL-NSRSYSL | FAILURE TO RECOVER NSR (RN) VIA X-TIE TO U2 FOR RCP SEALS | 1.000E+000 |
| | | | | OEP-XHE-XL-NR02H | OPERATOR FAILS TO RECOVER OFFSITE POWER IN 2 HOURS | 3.181E-001 |
| | | | | RCS-MDP-LK-BP2 | RCP SEAL STAGE 2 INTEGRITY (BINDING/POPPI NG OPEN) FAILS | 2.000E-001 |
| | | | | SSF-XHE-XM-SYSL | OPERATOR FAILS TO START AND ALIGN SSF DURING LOOP | 1.000E-001 |
| 19 | 8.78 | 0.16 | 1.204E-006 | IE-LOOP | LOSS OF OFFSITE POWER | 3.590E-002 |
| | | | | DUAL-UNIT-LOOP | Probability that a LOOP is a Dual Unit LOOP | 5.820E-001 |
| | | | | EPS-DGN-FR-1B | DIESEL GENERATOR 1B FAILS TO RUN | 2.411E-002 |
| | | | | EPS-XHE-XL-NR03H | OPERATOR FAILS TO RECOVER EMERGENCY DIESEL IN 3 HOURS | 5.563E-001 |
| | | | | NSR-STR-PG-1A | FAILURE OF NSR MDP-1A STRAINER | 1.000E+000 |
| | | | | OEP-XHE-XL-NR03H | OPERATOR FAILS TO RECOVER OFFSITE POWER IN 3 HOURS | 2.149E-001 |
| | | | | RCS-MDP-LK-BP2 | RCP SEAL STAGE 2 INTEGRITY (BINDING/POPPI NG OPEN) FAILS | 2.000E-001 |
| | | | | SSF-XHE-XM-SYSL | OPERATOR FAILS TO START AND ALIGN SSF DURING LOOP | 1.000E-001 |
| 20 | 8.92 | 0.14 | 1.023E-006 | IE-LOOP | LOSS OF OFFSITE POWER | 3.590E-002 |
| | | | | DUAL-UNIT-LOOP | Probability that a LOOP is a Dual Unit LOOP | 5.820E-001 |
| | | | | EPS-DGN-FR-1B | DIESEL GENERATOR 1B FAILS TO RUN | 2.411E-002 |
| | | | | EPS-XHE-XL-NR03H | OPERATOR FAILS TO RECOVER EMERGENCY DIESEL IN 3 HOURS | 5.563E-001 |
| | | | | NSR-STR-PG-1A | FAILURE OF NSR MDP-1A STRAINER | 1.000E+000 |
| | | | | OEP-XHE-XL-NR03H | OPERATOR FAILS TO RECOVER OFFSITE POWER IN 3 HOURS | 2.149E-001 |
| | | | | /RCS-MDP-LK-BP2 | RCP SEAL STAGE 2 INTEGRITY (BINDING/POPPI NG OPEN) FAILS | 8.000E-001 |
| | | | | SSF-DGN-FR-DGN | FAILURE OF SSF DIESEL GENERATOR TO RUN | 2.123E-002 |
| 21 | 9.05 | 0.13 | 9.990E-007 | IE-LOOP | LOSS OF OFFSITE POWER | 3.590E-002 |
| | | | | DUAL-UNIT-LOOP | Probability that a LOOP is a Dual Unit LOOP | 5.820E-001 |
| | | | | EPS-DGN-FS-1B | DIESEL GENERATOR 1B FAILS TO START | 5.000E-003 |
| | | | | EPS-XHE-XL-NR03H | OPERATOR FAILS TO RECOVER EMERGENCY DIESEL IN 3 HOURS | 5.563E-001 |
| | | | | NSR-STR-PG-1A | FAILURE OF NSR MDP-1A STRAINER | 1.000E+000 |
| | | | | OEP-XHE-XL-NR03H | OPERATOR FAILS TO RECOVER OFFSITE POWER IN 3 HOURS | 2.149E-001 |
| | | | | /RCS-MDP-LK-BP2 | RCP SEAL STAGE 2 INTEGRITY (BINDING/POPPI NG OPEN) FAILS | 8.000E-001 |
| | | | | SSF-XHE-XM-SYSL | OPERATOR FAILS TO START AND ALIGN SSF DURING LOOP | 1.000E-001 |
| 22 | 9.18 | 0.13 | 9.600E-007 | IE-TRANS | TRANSIENT | 8.000E-001 |
| | | | | CVC-MDP-RUNA | Fraction of time CVC MDP train A is running | 5.000E-001 |
| | | | | NSR-MDP-RUNA | FRACTION OF TIME NSR MDP TRAIN A IS RUNNING | 5.000E-001 |
| | | | | NSR-MDP-TM-1B | NSR MDP-1B UNAVAILABLE DUE TO T & M | 2.400E-002 |
| | | | | NSR-STR-PG-1A | FAILURE OF NSR MDP-1A STRAINER | 1.000E+000 |
| | | | | NSR-XHE-XL-NSRSYSL | FAILURE TO RECOVER NSR (RN) VIA X-TIE TO U2 FOR RCP SEALS | 1.000E+000 |
| | | | | RCS-MDP-LK-BP2 | RCP SEAL STAGE 2 INTEGRITY (BINDING/POPPI NG OPEN) FAILS | 2.000E-001 |

Project : MCGU_3P **TOP50 SEALLOCA W/O TRAIN A NSW** Min Cut Upper Bound: 7.430E-004 **Slice Applied** This Partition: 1.594E-004

| Cut No. | % Total | % Cut Set | Prob./Frequency | Basic Event | Description | Event Prob. |
|---|---|---|---|---|---|---|
| | | | | SSF-XHE-XR-SYS | OPERATOR FAILS TO RESTORE SSF PDP AFTER T & M | 1.000E-003 |
| 23 | 9.31 | 0.13 | 9.600E-007 | IE-TRANS | TRANSIENT | 8.000E-001 |
| | | | | CVC-MDP-RUNB | Fraction of time CVC MDP train B is running | 5.000E-001 |
| | | | | NSR-MDP-RUNA | FRACTION OF TIME NSR MDP TRAIN A IS RUNNING | 5.000E-001 |
| | | | | NSR-MDP-TM-1B | NSR MDP-1B UNAVAILABLE DUE TO T & M | 2.400E-002 |
| | | | | NSR-STR-PG-1A | FAILURE OF NSR MDP-1A STRAINER | 1.000E+000 |
| | | | | NSR-XHE-XL-NSRSYSL | FAILURE TO RECOVER NSR (RN) VIA X-TIE TO U2 FOR RCP SEALS | 1.000E+000 |
| | | | | RCS-MDP-LK-BP2 | RCP SEAL STAGE 2 INTEGRITY (BINDING/POPPI NG OPEN) FAILS | 2.000E-001 |
| | | | | SSF-XHE-XR-SYS | OPERATOR FAILS TO RESTORE SSF PDP AFTER T & M | 1.000E-003 |
| 24 | 9.44 | 0.13 | 9.600E-007 | IE-TRANS | TRANSIENT | 8.000E-001 |
| | | | | CVC-MDP-RUNA | Fraction of time CVC MDP train A is running | 5.000E-001 |
| | | | | NSR-MDP-RUNA | FRACTION OF TIME NSR MDP TRAIN A IS RUNNING | 5.000E-001 |
| | | | | NSR-MDP-TM-1B | NSR MDP-1B UNAVAILABLE DUE TO T & M | 2.400E-002 |
| | | | | NSR-STR-PG-1A | FAILURE OF NSR MDP-1A STRAINER | 1.000E+000 |
| | | | | NSR-XHE-XL-NSRSYSL | FAILURE TO RECOVER NSR (RN) VIA X-TIE TO U2 FOR RCP SEALS | 1.000E+000 |
| | | | | RCS-MDP-LK-BP2 | RCP SEAL STAGE 2 INTEGRITY (BINDING/POPPI NG OPEN) FAILS | 2.000E-001 |
| | | | | SSF-MOV-CC-849AC | FAILURE OF SSF MAKE-UP PDP TRAIN DISCH MOV 849AC | 1.000E-003 |
| 25 | 9.57 | 0.13 | 9.600E-007 | IE-TRANS | TRANSIENT | 8.000E-001 |
| | | | | CVC-MDP-RUNB | Fraction of time CVC MDP train B is running | 5.000E-001 |
| | | | | NSR-MDP-RUNA | FRACTION OF TIME NSR MDP TRAIN A IS RUNNING | 5.000E-001 |
| | | | | NSR-MDP-TM-1B | NSR MDP-1B UNAVAILABLE DUE TO T & M | 2.400E-002 |
| | | | | NSR-STR-PG-1A | FAILURE OF NSR MDP-1A STRAINER | 1.000E+000 |
| | | | | NSR-XHE-XL-NSRSYSL | FAILURE TO RECOVER NSR (RN) VIA X-TIE TO U2 FOR RCP SEALS | 1.000E+000 |
| | | | | RCS-MDP-LK-BP2 | RCP SEAL STAGE 2 INTEGRITY (BINDING/POPPI NG OPEN) FAILS | 2.000E-001 |
| | | | | SSF-MOV-CC-842AC | FAILURE OF SSF MAKE-UP PDP TRAIN SUCTION MOV 842AC | 1.000E-003 |
| 26 | 9.70 | 0.13 | 9.600E-007 | IE-TRANS | TRANSIENT | 8.000E-001 |
| | | | | CVC-MDP-RUNA | Fraction of time CVC MDP train A is running | 5.000E-001 |
| | | | | NSR-MDP-RUNA | FRACTION OF TIME NSR MDP TRAIN A IS RUNNING | 5.000E-001 |
| | | | | NSR-MDP-TM-1B | NSR MDP-1B UNAVAILABLE DUE TO T & M | 2.400E-002 |
| | | | | NSR-STR-PG-1A | FAILURE OF NSR MDP-1A STRAINER | 1.000E+000 |
| | | | | NSR-XHE-XL-NSRSYSL | FAILURE TO RECOVER NSR (RN) VIA X-TIE TO U2 FOR RCP SEALS | 1.000E+000 |
| | | | | RCS-MDP-LK-BP2 | RCP SEAL STAGE 2 INTEGRITY (BINDING/POPPI NG OPEN) FAILS | 2.000E-001 |
| | | | | SSF-MOV-CC-842AC | FAILURE OF SSF MAKE-UP PDP TRAIN SUCTION MOV 842AC | 1.000E-003 |
| 27 | 9.83 | 0.13 | 9.600E-007 | IE-TRANS | TRANSIENT | 8.000E-001 |
| | | | | CVC-MDP-RUNB | Fraction of time CVC MDP train B is running | 5.000E-001 |
| | | | | NSR-MDP-RUNA | FRACTION OF TIME NSR MDP TRAIN A IS RUNNING | 5.000E-001 |

Project : MCGU_3P **TOP50 SEALLOCA W/O TRAIN A NSW** Min Cut Upper Bound: 7.430E-004 **Slice Applied** This Partition: 1.594E-004

| Cut No. | % Total | % Cut Set | Prob./Frequency | Basic Event | Description | Event Prob. |
|---|---|---|---|---|---|---|
| | | | | NSR-MDP-TM-1B | NSR MDP-1B UNAVAILABLE DUE TO T & M | 2.400E-002 |
| | | | | NSR-STR-PG-1A | FAILURE OF NSR MDP-1A STRAINER | 1.000E+000 |
| | | | | NSR-XHE-XL-NSRSYSL | FAILURE TO RECOVER NSR (RN) VIA X-TIE TO U2 FOR RCP SEALS | 1.000E+000 |
| | | | | RCS-MDP-LK-BP2 | RCP SEAL STAGE 2 INTEGRITY (BINDING/POPPI NG OPEN) FAILS | 2.000E-001 |
| | | | | SSF-MOV-CC-849AC | FAILURE OF SSF MAKE-UP PDP TRAIN DISCH MOV 849AC | 1.000E-003 |
| 28 | 9.96 | 0.13 | 9.600E-007 | IE-TRANS | TRANSIENT | 8.000E-001 |
| | | | | CVC-MDP-RUNB | Fraction of time CVC MDP train B is running | 5.000E-001 |
| | | | | NSR-MDP-RUNA | FRACTION OF TIME NSR MDP TRAIN A IS RUNNING | 5.000E-001 |
| | | | | NSR-MDP-TM-1B | NSR MDP-1B UNAVAILABLE DUE TO T & M | 2.400E-002 |
| | | | | NSR-STR-PG-1A | FAILURE OF NSR MDP-1A STRAINER | 1.000E+000 |
| | | | | NSR-XHE-XL-NSRSYSL | FAILURE TO RECOVER NSR (RN) VIA X-TIE TO U2 FOR RCP SEALS | 1.000E+000 |
| | | | | RCS-MDP-LK-BP2 | RCP SEAL STAGE 2 INTEGRITY (BINDING/POPPI NG OPEN) FAILS | 2.000E-001 |
| | | | | SSF-MOV-CC-1013C | FAILURE OF SSF MAKE-UP PDP TRAIN DISCH MOV 1013C | 1.000E-003 |
| 29 | 10.09 | 0.13 | 9.600E-007 | IE-TRANS | TRANSIENT | 8.000E-001 |
| | | | | CVC-MDP-RUNA | Fraction of time CVC MDP train A is running | 5.000E-001 |
| | | | | NSR-MDP-RUNA | FRACTION OF TIME NSR MDP TRAIN A IS RUNNING | 5.000E-001 |
| | | | | NSR-MDP-TM-1B | NSR MDP-1B UNAVAILABLE DUE TO T & M | 2.400E-002 |
| | | | | NSR-STR-PG-1A | FAILURE OF NSR MDP-1A STRAINER | 1.000E+000 |
| | | | | NSR-XHE-XL-NSRSYSL | FAILURE TO RECOVER NSR (RN) VIA X-TIE TO U2 FOR RCP SEALS | 1.000E+000 |
| | | | | RCS-MDP-LK-BP2 | RCP SEAL STAGE 2 INTEGRITY (BINDING/POPPI NG OPEN) FAILS | 2.000E-001 |
| | | | | SSF-MOV-CC-1013C | FAILURE OF SSF MAKE-UP PDP TRAIN DISCH MOV 1013C | 1.000E-003 |
| 30 | 10.22 | 0.13 | 9.358E-007 | IE-TRANS | TRANSIENT | 8.000E-001 |
| | | | | CVC-MDP-RUNA | Fraction of time CVC MDP train A is running | 5.000E-001 |
| | | | | NSR-MDP-RUNA | FRACTION OF TIME NSR MDP TRAIN A IS RUNNING | 5.000E-001 |
| | | | | NSR-MDP-TM-1B | NSR MDP-1B UNAVAILABLE DUE TO T & M | 2.400E-002 |
| | | | | NSR-STR-PG-1A | FAILURE OF NSR MDP-1A STRAINER | 1.000E+000 |
| | | | | NSR-XHE-XL-NSRSYSL | FAILURE TO RECOVER NSR (RN) VIA X-TIE TO U2 FOR RCP SEALS | 1.000E+000 |
| | | | | RCS-MDP-LK-BP2 | RCP SEAL STAGE 2 INTEGRITY (BINDING/POPPI NG OPEN) FAILS | 2.000E-001 |
| | | | | SSF-PDP-FR-SYS | FAILURE OF SSF MAKE-UP PDP TRAIN TO RUN | 9.748E-004 |
| 31 | 10.35 | 0.13 | 9.358E-007 | IE-TRANS | TRANSIENT | 8.000E-001 |
| | | | | CVC-MDP-RUNB | Fraction of time CVC MDP train B is running | 5.000E-001 |
| | | | | NSR-MDP-RUNA | FRACTION OF TIME NSR MDP TRAIN A IS RUNNING | 5.000E-001 |
| | | | | NSR-MDP-TM-1B | NSR MDP-1B UNAVAILABLE DUE TO T & M | 2.400E-002 |
| | | | | NSR-STR-PG-1A | FAILURE OF NSR MDP-1A STRAINER | 1.000E+000 |

Project : MCGU_3P **TOP50 SEALLOCA W/O TRAIN A NSW** Min Cut Upper Bound: 7.430E-004 **Slice Applied** This Partition: 1.594E-004

| Cut No. | % Total | % Cut Set | Prob./Frequency | Basic Event | Description | Event Prob. |
|---|---|---|---|---|---|---|
| | | | | NSR-XHE-XL-NSRSYSL | FAILURE TO RECOVER NSR (RN) VIA X-TIE TO U2 FOR RCP SEALS | 1.000E+000 |
| | | | | RCS-MDP-LK-BP2 | RCP SEAL STAGE 2 INTEGRITY (BINDING/POPPI NG OPEN) FAILS | 2.000E-001 |
| | | | | SSF-PDP-FR-SYS | FAILURE OF SSF MAKE-UP PDP TRAIN TO RUN | 9.748E-004 |
| 32 | 10.47 | 0.12 | 9.000E-007 | IE-LOACA | Loss of vital ac Bus 1A initiating event | 9.000E-003 |
| | | | | CVC-MDP-RUNA | Fraction of time CVC MDP train A is running | 5.000E-001 |
| | | | | NSR-MDP-FS-1B | NSR MDP-1B FAILS TO START | 2.000E-003 |
| | | | | NSR-MDP-RUNA | FRACTION OF TIME NSR MDP TRAIN A IS RUNNING | 5.000E-001 |
| | | | | NSR-XHE-XL-NSRSYSL | FAILURE TO RECOVER NSR (RN) VIA X-TIE TO U2 FOR RCP SEALS | 1.000E+000 |
| | | | | RCS-MDP-LK-BP2 | RCP SEAL STAGE 2 INTEGRITY (BINDING/POPPI NG OPEN) FAILS | 2.000E-001 |
| 33 | 10.59 | 0.12 | 9.000E-007 | IE-LOACA | Loss of vital ac Bus 1A initiating event | 9.000E-003 |
| | | | | CVC-MDP-RUNB | Fraction of time CVC MDP train B is running | 5.000E-001 |
| | | | | NSR-MDP-FS-1B | NSR MDP-1B FAILS TO START | 2.000E-003 |
| | | | | NSR-MDP-RUNA | FRACTION OF TIME NSR MDP TRAIN A IS RUNNING | 5.000E-001 |
| | | | | NSR-XHE-XL-NSRSYSL | FAILURE TO RECOVER NSR (RN) VIA X-TIE TO U2 FOR RCP SEALS | 1.000E+000 |
| | | | | RCS-MDP-LK-BP2 | RCP SEAL STAGE 2 INTEGRITY (BINDING/POPPI NG OPEN) FAILS | 2.000E-001 |
| 34 | 10.70 | 0.11 | 8.359E-007 | IE-LOOP | LOSS OF OFFSITE POWER | 3.590E-002 |
| | | | | DUAL-UNIT-LOOP | Probability that a LOOP is a Dual Unit LOOP | 5.820E-001 |
| | | | | NSR-MDP-RUNA | FRACTION OF TIME NSR MDP TRAIN A IS RUNNING | 5.000E-001 |
| | | | | NSR-MDP-TM-1B | NSR MDP-1B UNAVAILABLE DUE TO T & M | 2.400E-002 |
| | | | | NSR-STR-PG-1A | FAILURE OF NSR MDP-1A STRAINER | 1.000E+000 |
| | | | | /OEP-XHE-XL-NR03H | OPERATOR FAILS TO RECOVER OFFSITE POWER IN 3 HOURS | 7.851E-001 |
| | | | | RCS-MDP-LK-BP2 | RCP SEAL STAGE 2 INTEGRITY (BINDING/POPPI NG OPEN) FAILS | 2.000E-001 |
| | | | | SSF-DGN-FR-DGN | FAILURE OF SSF DIESEL GENERATOR TO RUN | 2.123E-002 |
| 35 | 10.80 | 0.10 | 7.680E-007 | IE-TRANS | TRANSIENT | 8.000E-001 |
| | | | | CVC-MDP-RUNB | Fraction of time CVC MDP train B is running | 5.000E-001 |
| | | | | NSR-MDP-RUNA | FRACTION OF TIME NSR MDP TRAIN A IS RUNNING | 5.000E-001 |
| | | | | NSR-MDP-TM-1B | NSR MDP-1B UNAVAILABLE DUE TO T & M | 2.400E-002 |
| | | | | NSR-STR-PG-1A | FAILURE OF NSR MDP-1A STRAINER | 1.000E+000 |
| | | | | NSR-XHE-XL-NSRSYSL | FAILURE TO RECOVER NSR (RN) VIA X-TIE TO U2 FOR RCP SEALS | 1.000E+000 |
| | | | | RCS-MDP-LK-BP2 | RCP SEAL STAGE 2 INTEGRITY (BINDING/POPPI NG OPEN) FAILS | 2.000E-001 |
| | | | | SSF-ACX-FS-SSF2 | FAILURE OF SSF AHU FAN #2 TO START | 8.000E-004 |
| 36 | 10.90 | 0.10 | 7.680E-007 | IE-TRANS | TRANSIENT | 8.000E-001 |
| | | | | CVC-MDP-RUNA | Fraction of time CVC MDP train A is running | 5.000E-001 |

Project : MCGU_3P **TOP50 SEALLOCA W/O TRAIN A NSW** Min Cut Upper Bound: 7.430E-004 **Slice Applied** This Partition: 1.594E-004

| Cut No. | % Total | % Cut Set | Prob./Frequency | Basic Event | Description | Event Prob. |
|---|---|---|---|---|---|---|
| | | | | NSR-MDP-RUNA | FRACTION OF TIME NSR MDP TRAIN A IS RUNNING | 5.000E-001 |
| | | | | NSR-MDP-TM-1B | NSR MDP-1B UNAVAILABLE DUE TO T & M | 2.400E-002 |
| | | | | NSR-STR-PG-1A | FAILURE OF NSR MDP-1A STRAINER | 1.000E+000 |
| | | | | NSR-XHE-XL-NSRSYSL | FAILURE TO RECOVER NSR (RN) VIA X-TIE TO U2 FOR RCP SEALS | 1.000E+000 |
| | | | | RCS-MDP-LK-BP2 | RCP SEAL STAGE 2 INTEGRITY (BINDING/POPPI NG OPEN) FAILS | 2.000E-001 |
| | | | | SSF-ACX-FS-SSF2 | FAILURE OF SSF AHU FAN #2 TO START | 8.000E-004 |
| 37 | 10.98 | 0.08 | 6.237E-007 | IE-LOOP | LOSS OF OFFSITE POWER | 3.590E-002 |
| | | | | CVC-MDP-RUNB | Fraction of time CVC MDP train B is running | 5.000E-001 |
| | | | | NSR-MDP-RUNA | FRACTION OF TIME NSR MDP TRAIN A IS RUNNING | 5.000E-001 |
| | | | | NSR-MDP-TM-1B | NSR MDP-1B UNAVAILABLE DUE TO T & M | 2.400E-002 |
| | | | | NSR-STR-PG-1A | FAILURE OF NSR MDP-1A STRAINER | 1.000E+000 |
| | | | | NSR-XHE-XL-NSRSYSL | FAILURE TO RECOVER NSR (RN) VIA X-TIE TO U2 FOR RCP SEALS | 1.000E+000 |
| | | | | /OEP-XHE-XL-NR02H | OPERATOR FAILS TO RECOVER OFFSITE POWER IN 2 HOURS | 6.819E-001 |
| | | | | RCS-MDP-LK-BP2 | RCP SEAL STAGE 2 INTEGRITY (BINDING/POPPI NG OPEN) FAILS | 2.000E-001 |
| | | | | SSF-DGN-FR-DGN | FAILURE OF SSF DIESEL GENERATOR TO RUN | 2.123E-002 |
| 38 | 11.06 | 0.08 | 6.237E-007 | IE-LOOP | LOSS OF OFFSITE POWER | 3.590E-002 |
| | | | | CVC-MDP-RUNA | Fraction of time CVC MDP train A is running | 5.000E-001 |
| | | | | NSR-MDP-RUNA | FRACTION OF TIME NSR MDP TRAIN A IS RUNNING | 5.000E-001 |
| | | | | NSR-MDP-TM-1B | NSR MDP-1B UNAVAILABLE DUE TO T & M | 2.400E-002 |
| | | | | NSR-STR-PG-1A | FAILURE OF NSR MDP-1A STRAINER | 1.000E+000 |
| | | | | NSR-XHE-XL-NSRSYSL | FAILURE TO RECOVER NSR (RN) VIA X-TIE TO U2 FOR RCP SEALS | 1.000E+000 |
| | | | | /OEP-XHE-XL-NR02H | OPERATOR FAILS TO RECOVER OFFSITE POWER IN 2 HOURS | 6.819E-001 |
| | | | | RCS-MDP-LK-BP2 | RCP SEAL STAGE 2 INTEGRITY (BINDING/POPPI NG OPEN) FAILS | 2.000E-001 |
| | | | | SSF-DGN-FR-DGN | FAILURE OF SSF DIESEL GENERATOR TO RUN | 2.123E-002 |
| 39 | 11.14 | 0.08 | 5.994E-007 | IE-LOOP | LOSS OF OFFSITE POWER | 3.590E-002 |
| | | | | DUAL-UNIT-LOOP | Probability that a LOOP is a Dual Unit LOOP | 5.820E-001 |
| | | | | EPS-DGN-TM-1B | DIESEL GENERATOR 1B UNAVAILABLE DUE TO TEST AND MAINTENANCE | 1.200E-002 |
| | | | | EPS-XHE-XL-NR03H | OPERATOR FAILS TO RECOVER EMERGENCY DIESEL IN 3 HOURS | 5.563E-001 |
| | | | | NSR-STR-PG-1A | FAILURE OF NSR MDP-1A STRAINER | 1.000E+000 |
| | | | | OEP-XHE-XL-NR03H | OPERATOR FAILS TO RECOVER OFFSITE POWER IN 3 HOURS | 2.149E-001 |
| | | | | RCS-MDP-LK-BP2 | RCP SEAL STAGE 2 INTEGRITY (BINDING/POPPI NG OPEN) FAILS | 2.000E-001 |
| | | | | SSF-XHE-XM-SYSL | OPERATOR FAILS TO START AND ALIGN SSF DURING LOOP | 1.000E-001 |
| 40 | 11.22 | 0.08 | 5.994E-007 | IE-LOOP | LOSS OF OFFSITE POWER | 3.590E-002 |
| | | | | DUAL-UNIT-LOOP | Probability that a LOOP is a Dual Unit LOOP | 5.820E-001 |

Project : MCGU_3P **TOP50 SEALLOCA W/O TRAIN A NSW** Min Cut Upper Bound: 7.430E-004 **Slice Applied** This Partition: 1.594E-004

| Cut No. | % Total | % Cut Set | Prob./Frequency | Basic Event | Description | Event Prob. |
|---|---|---|---|---|---|---|
| | | | | EPS-XHE-XL-NR03H | OPERATOR FAILS TO RECOVER EMERGENCY DIESEL IN 3 HOURS | 5.563E-001 |
| | | | | NSR-MDP-RUNA | FRACTION OF TIME NSR MDP TRAIN A IS RUNNING | 5.000E-001 |
| | | | | NSR-MDP-TM-1B | NSR MDP-1B UNAVAILABLE DUE TO T & M | 2.400E-002 |
| | | | | NSR-STR-PG-1A | FAILURE OF NSR MDP-1A STRAINER | 1.000E+000 |
| | | | | OEP-XHE-XL-NR03H | OPERATOR FAILS TO RECOVER OFFSITE POWER IN 3 HOURS | 2.149E-001 |
| | | | | RCS-MDP-LK-BP2 | RCP SEAL STAGE 2 INTEGRITY (BINDING/POPPI NG OPEN) FAILS | 2.000E-001 |
| | | | | SSF-XHE-XM-SYSL | OPERATOR FAILS TO START AND ALIGN SSF DURING LOOP | 1.000E-001 |
| 41 | 11.30 | 0.08 | 5.994E-007 | IE-LOOP | LOSS OF OFFSITE POWER | 3.590E-002 |
| | | | | DUAL-UNIT-LOOP | Probability that a LOOP is a Dual Unit LOOP | 5.820E-001 |
| | | | | EPS-FAN-FS-EX1B1 | FAILURE OF DIESEL GENERATOR 1B FAN 1B1 TO START | 3.000E-003 |
| | | | | EPS-XHE-XL-NR03H | OPERATOR FAILS TO RECOVER EMERGENCY DIESEL IN 3 HOURS | 5.563E-001 |
| | | | | NSR-STR-PG-1A | FAILURE OF NSR MDP-1A STRAINER | 1.000E+000 |
| | | | | OEP-XHE-XL-NR03H | OPERATOR FAILS TO RECOVER OFFSITE POWER IN 3 HOURS | 2.149E-001 |
| | | | | /RCS-MDP-LK-BP2 | RCP SEAL STAGE 2 INTEGRITY (BINDING/POPPI NG OPEN) FAILS | 8.000E-001 |
| | | | | SSF-XHE-XM-SYSL | OPERATOR FAILS TO START AND ALIGN SSF DURING LOOP | 1.000E-001 |
| 42 | 11.38 | 0.08 | 5.994E-007 | IE-LOOP | LOSS OF OFFSITE POWER | 3.590E-002 |
| | | | | DUAL-UNIT-LOOP | Probability that a LOOP is a Dual Unit LOOP | 5.820E-001 |
| | | | | EPS-FAN-FS-EX1B2 | FAILURE OF DIESEL GENERATOR 1B FAN 1B2 TO START | 3.000E-003 |
| | | | | EPS-XHE-XL-NR03H | OPERATOR FAILS TO RECOVER EMERGENCY DIESEL IN 3 HOURS | 5.563E-001 |
| | | | | NSR-STR-PG-1A | FAILURE OF NSR MDP-1A STRAINER | 1.000E+000 |
| | | | | OEP-XHE-XL-NR03H | OPERATOR FAILS TO RECOVER OFFSITE POWER IN 3 HOURS | 2.149E-001 |
| | | | | /RCS-MDP-LK-BP2 | RCP SEAL STAGE 2 INTEGRITY (BINDING/POPPI NG OPEN) FAILS | 8.000E-001 |
| | | | | SSF-XHE-XM-SYSL | OPERATOR FAILS TO START AND ALIGN SSF DURING LOOP | 1.000E-001 |
| 43 | 11.45 | 0.07 | 5.400E-007 | IE-LOACA | Loss of vital ac Bus 1A initiating event | 9.000E-003 |
| | | | | CVC-MDP-RUNA | Fraction of time CVC MDP train A is running | 5.000E-001 |
| | | | | NSR-MDP-RUNA | FRACTION OF TIME NSR MDP TRAIN A IS RUNNING | 5.000E-001 |
| | | | | NSR-MDP-TM-1B | NSR MDP-1B UNAVAILABLE DUE TO T & M | 2.400E-002 |
| | | | | NSR-XHE-XL-NSRSYSL | FAILURE TO RECOVER NSR (RN) VIA X-TIE TO U2 FOR RCP SEALS | 1.000E+000 |
| | | | | RCS-MDP-LK-BP1 | RCP SEAL STAGE 1 INTEGRITY (BINDING/POPPI NG OPEN) FAILS | 1.250E-002 |
| | | | | /RCS-MDP-LK-BP2 | RCP SEAL STAGE 2 INTEGRITY (BINDING/POPPI NG OPEN) FAILS | 8.000E-001 |
| 44 | 11.52 | 0.07 | 5.400E-007 | IE-LOACA | Loss of vital ac Bus 1A initiating event | 9.000E-003 |
| | | | | CVC-MDP-RUNB | Fraction of time CVC MDP train B is running | 5.000E-001 |
| | | | | NSR-MDP-RUNA | FRACTION OF TIME NSR MDP TRAIN A IS RUNNING | 5.000E-001 |
| | | | | NSR-MDP-TM-1B | NSR MDP-1B UNAVAILABLE DUE TO T & M | 2.400E-002 |

Project : MCGU_3P **TOP50 SEALLOCA W/O TRAIN A NSW** Min Cut Upper Bound: 7.430E-004 **Slice Applied** This Partition: 1.594E-004

| Cut No. | % Total | % Cut Set | Prob./Frequency | Basic Event | Description | Event Prob. |
|---|---|---|---|---|---|---|
| | | | | NSR-XHE-XL-NSRSYSL | FAILURE TO RECOVER NSR (RN) VIA X-TIE TO U2 FOR RCP SEALS | 1.000E+000 |
| | | | | RCS-MDP-LK-BP1 | RCP SEAL STAGE 1 INTEGRITY (BINDING/POPPI NG OPEN) FAILS | 1.250E-002 |
| | | | | /RCS-MDP-LK-BP2 | RCP SEAL STAGE 2 INTEGRITY (BINDING/POPPI NG OPEN) FAILS | 8.000E-001 |
| 45 | 11.59 | 0.07 | 5.090E-007 | IE-LOOP | LOSS OF OFFSITE POWER | 3.590E-002 |
| | | | | DUAL-UNIT-LOOP | Probability that a LOOP is a Dual Unit LOOP | 5.820E-001 |
| | | | | EPS-XHE-XL-NR03H | OPERATOR FAILS TO RECOVER EMERGENCY DIESEL IN 3 HOURS | 5.563E-001 |
| | | | | NSR-MDP-RUNA | FRACTION OF TIME NSR MDP TRAIN A IS RUNNING | 5.000E-001 |
| | | | | NSR-MDP-TM-1B | NSR MDP-1B UNAVAILABLE DUE TO T & M | 2.400E-002 |
| | | | | NSR-STR-PG-1A | FAILURE OF NSR MDP-1A STRAINER | 1.000E+000 |
| | | | | OEP-XHE-XL-NR03H | OPERATOR FAILS TO RECOVER OFFSITE POWER IN 3 HOURS | 2.149E-001 |
| | | | | /RCS-MDP-LK-BP2 | RCP SEAL STAGE 2 INTEGRITY (BINDING/POPPI NG OPEN) FAILS | 8.000E-001 |
| | | | | SSF-DGN-FR-DGN | FAILURE OF SSF DIESEL GENERATOR TO RUN | 2.123E-002 |
| 46 | 11.66 | 0.07 | 5.090E-007 | IE-LOOP | LOSS OF OFFSITE POWER | 3.590E-002 |
| | | | | DUAL-UNIT-LOOP | Probability that a LOOP is a Dual Unit LOOP | 5.820E-001 |
| | | | | EPS-DGN-TM-1B | DIESEL GENERATOR 1B UNAVAILABLE DUE TO TEST AND MAINTENANCE | 1.200E-002 |
| | | | | EPS-XHE-XL-NR03H | OPERATOR FAILS TO RECOVER EMERGENCY DIESEL IN 3 HOURS | 5.563E-001 |
| | | | | NSR-STR-PG-1A | FAILURE OF NSR MDP-1A STRAINER | 1.000E+000 |
| | | | | OEP-XHE-XL-NR03H | OPERATOR FAILS TO RECOVER OFFSITE POWER IN 3 HOURS | 2.149E-001 |
| | | | | /RCS-MDP-LK-BP2 | RCP SEAL STAGE 2 INTEGRITY (BINDING/POPPI NG OPEN) FAILS | 8.000E-001 |
| | | | | SSF-DGN-FR-DGN | FAILURE OF SSF DIESEL GENERATOR TO RUN | 2.123E-002 |
| 47 | 11.72 | 0.06 | 4.500E-007 | IE-LOACA | Loss of vital ac Bus 1A initiating event | 9.000E-003 |
| | | | | CVC-MDP-RUNA | Fraction of time CVC MDP train A is running | 5.000E-001 |
| | | | | NSR-MDP-RUNA | FRACTION OF TIME NSR MDP TRAIN A IS RUNNING | 5.000E-001 |
| | | | | NSR-MOV-CC-RN9B | FAILURE TO OPEN NSR PUMP B SNSWP SUCTION MOV RN9B | 1.000E-003 |
| | | | | NSR-XHE-XL-NSRSYSL | FAILURE TO RECOVER NSR (RN) VIA X-TIE TO U2 FOR RCP SEALS | 1.000E+000 |
| | | | | RCS-MDP-LK-BP2 | RCP SEAL STAGE 2 INTEGRITY (BINDING/POPPI NG OPEN) FAILS | 2.000E-001 |
| 48 | 11.78 | 0.06 | 4.500E-007 | IE-LOACA | Loss of vital ac Bus 1A initiating event | 9.000E-003 |
| | | | | CVC-MDP-RUNB | Fraction of time CVC MDP train B is running | 5.000E-001 |
| | | | | NSR-MDP-RUNA | FRACTION OF TIME NSR MDP TRAIN A IS RUNNING | 5.000E-001 |
| | | | | NSR-MOV-CC-RN9B | FAILURE TO OPEN NSR PUMP B SNSWP SUCTION MOV RN9B | 1.000E-003 |
| | | | | NSR-XHE-XL-NSRSYSL | FAILURE TO RECOVER NSR (RN) VIA X-TIE TO U2 FOR RCP SEALS | 1.000E+000 |
| | | | | RCS-MDP-LK-BP2 | RCP SEAL STAGE 2 INTEGRITY (BINDING/POPPI NG OPEN) FAILS | 2.000E-001 |
| 49 | 11.84 | 0.06 | 4.500E-007 | IE-LOACA | Loss of vital ac Bus 1A initiating event | 9.000E-003 |

Project : MCGU_3P **TOP50 SEALLOCA W/O TRAIN A NSW** Min Cut Upper Bound: 7.430E-004 **Slice Applied** This Partition: 1.594E-004

| Cut No. | % Total | % Cut Set | Prob./Frequency | Basic Event | Description | Event Prob. |
|---|---|---|---|---|---|---|
| | | | | CCW-MDP-RUNA1A2 | FRACTION OF TIME CCW MDP 1A1 AND 1A2 ARE INITIALLY RUNNING | 5.000E-001 |
| | | | | CVC-MDP-RUNB | Fraction of time CVC MDP train B is running | 5.000E-001 |
| | | | | NSR-MOV-CC-RN9B | FAILURE TO OPEN NSR PUMP B SNSWP SUCTION MOV RN9B | 1.000E-003 |
| | | | | NSR-XHE-XL-NSRSYSL | FAILURE TO RECOVER NSR (RN) VIA X-TIE TO U2 FOR RCP SEALS | 1.000E+000 |
| | | | | RCS-MDP-LK-BP2 | RCP SEAL STAGE 2 INTEGRITY (BINDING/POPPI NG OPEN) FAILS | 2.000E-001 |
| 50 | 11.90 | 0.06 | 4.500E-007 | IE-LOACA | Loss of vital ac Bus 1A initiating event | 9.000E-003 |
| | | | | CCW-MDP-RUNB1B2 | FRACTION OF TIME CCW MDP 1B1 AND 1B2 ARE INITIALLY RUNNING | 5.000E-001 |
| | | | | CVC-MDP-RUNB | Fraction of time CVC MDP train B is running | 5.000E-001 |
| | | | | NSR-MOV-CC-RN9B | FAILURE TO OPEN NSR PUMP B SNSWP SUCTION MOV RN9B | 1.000E-003 |
| | | | | NSR-XHE-XL-NSRSYSL | FAILURE TO RECOVER NSR (RN) VIA X-TIE TO U2 FOR RCP SEALS | 1.000E+000 |
| | | | | RCS-MDP-LK-BP2 | RCP SEAL STAGE 2 INTEGRITY (BINDING/POPPI NG OPEN) FAILS | 2.000E-001 |

ATTACHMENT J – SLICE LOOP / SLB INITIATIORS W/ LOSS OF 'A' TRAIN NO SEALLOCA SEQUENCES

Project : MCGU_3P Min Cut Upper Bound: 2.956E-004 **Slice Applied** This Partition: 2.494E-004

| Cut No. | % Total | % Cut Set | Prob./Frequency | Basic Event | Description | Event Prob. |
|---|---|---|---|---|---|---|
| 1 | 19.55 | 19.55 | 5.778E-005 | IE-LOOP | LOSS OF OFFSITE POWER | 3.590E-002 |
| | | | | DUAL-UNIT-LOOP | Probability that a LOOP is a Dual Unit LOOP | 5.820E-001 |
| | | | | EPS-DGN-FR-1B | DIESEL GENERATOR 1B FAILS TO RUN | 2.411E-002 |
| | | | | EPS-XHE-XL-NR03H | OPERATOR FAILS TO RECOVER EMERGENCY DIESEL IN 3 HOURS | 5.563E-001 |
| | | | | NSR-STR-PG-1A | FAILURE OF NSR MDP-1A STRAINER | 1.000E+000 |
| | | | | OEP-XHE-XL-NR03H | OPERATOR FAILS TO RECOVER OFFSITE POWER IN 3 HOURS | 2.149E-001 |
| | | | | /SSF-SBO | STANDBY SHUTDOWN FACILITY SEAL COOLING | 9.594E-001 |
| 2 | 29.28 | 9.73 | 2.875E-005 | IE-LOOP | LOSS OF OFFSITE POWER | 3.590E-002 |
| | | | | DUAL-UNIT-LOOP | Probability that a LOOP is a Dual Unit LOOP | 5.820E-001 |
| | | | | EPS-XHE-XL-NR03H | OPERATOR FAILS TO RECOVER EMERGENCY DIESEL IN 3 HOURS | 5.563E-001 |
| | | | | NSR-MDP-RUNA | FRACTION OF TIME NSR MDP TRAIN A IS RUNNING | 5.000E-001 |
| | | | | NSR-MDP-TM-1B | NSR MDP-1B UNAVAILABLE DUE TO T & M | 2.400E-002 |
| | | | | NSR-STR-PG-1A | FAILURE OF NSR MDP-1A STRAINER | 1.000E+000 |
| | | | | OEP-XHE-XL-NR03H | OPERATOR FAILS TO RECOVER OFFSITE POWER IN 3 HOURS | 2.149E-001 |
| | | | | /SSF-SBO | STANDBY SHUTDOWN FACILITY SEAL COOLING | 9.594E-001 |
| 3 | 39.01 | 9.73 | 2.875E-005 | IE-LOOP | LOSS OF OFFSITE POWER | 3.590E-002 |
| | | | | DUAL-UNIT-LOOP | Probability that a LOOP is a Dual Unit LOOP | 5.820E-001 |
| | | | | EPS-DGN-TM-1B | DIESEL GENERATOR 1B UNAVAILABLE DUE TO TEST AND MAINTENANCE | 1.200E-002 |
| | | | | EPS-XHE-XL-NR03H | OPERATOR FAILS TO RECOVER EMERGENCY DIESEL IN 3 HOURS | 5.563E-001 |
| | | | | NSR-STR-PG-1A | FAILURE OF NSR MDP-1A STRAINER | 1.000E+000 |
| | | | | OEP-XHE-XL-NR03H | OPERATOR FAILS TO RECOVER OFFSITE POWER IN 3 HOURS | 2.149E-001 |
| | | | | /SSF-SBO | STANDBY SHUTDOWN FACILITY SEAL COOLING | 9.594E-001 |
| 4 | 43.06 | 4.05 | 1.198E-005 | IE-LOOP | LOSS OF OFFSITE POWER | 3.590E-002 |
| | | | | DUAL-UNIT-LOOP | Probability that a LOOP is a Dual Unit LOOP | 5.820E-001 |
| | | | | EPS-DGN-FS-1B | DIESEL GENERATOR 1B FAILS TO START | 5.000E-003 |
| | | | | EPS-XHE-XL-NR03H | OPERATOR FAILS TO RECOVER EMERGENCY DIESEL IN 3 HOURS | 5.563E-001 |
| | | | | NSR-STR-PG-1A | FAILURE OF NSR MDP-1A STRAINER | 1.000E+000 |
| | | | | OEP-XHE-XL-NR03H | OPERATOR FAILS TO RECOVER OFFSITE POWER IN 3 HOURS | 2.149E-001 |
| | | | | /SSF-SBO | STANDBY SHUTDOWN FACILITY SEAL COOLING | 9.594E-001 |
| 5 | 45.49 | 2.43 | 7.188E-006 | IE-LOOP | LOSS OF OFFSITE POWER | 3.590E-002 |
| | | | | DUAL-UNIT-LOOP | Probability that a LOOP is a Dual Unit LOOP | 5.820E-001 |
| | | | | EPS-FAN-FS-EX1B2 | FAILURE OF DIESEL GENERATOR 1B FAN 1B2 TO START | 3.000E-003 |
| | | | | EPS-XHE-XL-NR03H | OPERATOR FAILS TO RECOVER EMERGENCY DIESEL IN 3 HOURS | 5.563E-001 |

Project : MCGU_3P Min Cut Upper Bound: 2.956E-004 **Slice Applied** This Partition: 2.494E-004

| Cut No. | % Total | % Cut Set | Prob./Frequency | Basic Event | Description | Event Prob. |
|---|---|---|---|---|---|---|
| | | | | NSR-STR-PG-1A | FAILURE OF NSR MDP-1A STRAINER | 1.000E+000 |
| | | | | OEP-XHE-XL-NR03H | OPERATOR FAILS TO RECOVER OFFSITE POWER IN 3 HOURS | 2.149E-001 |
| | | | | /SSF-SBO | STANDBY SHUTDOWN FACILITY SEAL COOLING | 9.594E-001 |
| 6 | 47.92 | 2.43 | 7.188E-006 | IE-LOOP | LOSS OF OFFSITE POWER | 3.590E-002 |
| | | | | DUAL-UNIT-LOOP | Probability that a LOOP is a Dual Unit LOOP | 5.820E-001 |
| | | | | EPS-FAN-FS-EX1B1 | FAILURE OF DIESEL GENERATOR 1B FAN 1B1 TO START | 3.000E-003 |
| | | | | EPS-XHE-XL-NR03H | OPERATOR FAILS TO RECOVER EMERGENCY DIESEL IN 3 HOURS | 5.563E-001 |
| | | | | NSR-STR-PG-1A | FAILURE OF NSR MDP-1A STRAINER | 1.000E+000 |
| | | | | OEP-XHE-XL-NR03H | OPERATOR FAILS TO RECOVER OFFSITE POWER IN 3 HOURS | 2.149E-001 |
| | | | | /SSF-SBO | STANDBY SHUTDOWN FACILITY SEAL COOLING | 9.594E-001 |
| 7 | 49.54 | 1.62 | 4.792E-006 | IE-LOOP | LOSS OF OFFSITE POWER | 3.590E-002 |
| | | | | DUAL-UNIT-LOOP | Probability that a LOOP is a Dual Unit LOOP | 5.820E-001 |
| | | | | EPS-XHE-XL-NR03H | OPERATOR FAILS TO RECOVER EMERGENCY DIESEL IN 3 HOURS | 5.563E-001 |
| | | | | NSR-MDP-FS-1B | NSR MDP-1B FAILS TO START | 2.000E-003 |
| | | | | NSR-STR-PG-1A | FAILURE OF NSR MDP-1A STRAINER | 1.000E+000 |
| | | | | OEP-XHE-XL-NR03H | OPERATOR FAILS TO RECOVER OFFSITE POWER IN 3 HOURS | 2.149E-001 |
| | | | | /SSF-SBO | STANDBY SHUTDOWN FACILITY SEAL COOLING | 9.594E-001 |
| 8 | 50.94 | 1.40 | 4.150E-006 | IE-LOOP | LOSS OF OFFSITE POWER | 3.590E-002 |
| | | | | EPS-DGN-FR-1B | DIESEL GENERATOR 1B FAILS TO RUN | 2.411E-002 |
| | | | | EPS-XHE-XL-NR03H | OPERATOR FAILS TO RECOVER EMERGENCY DIESEL IN 3 HOURS | 5.563E-001 |
| | | | | EPS-XHE-XM-XTIE | FAILURE TO X-TIE POWER FROM UNIT 2 DURING SINGLE UNIT LOOP | 1.000E-001 |
| | | | | NSR-STR-PG-1A | FAILURE OF NSR MDP-1A STRAINER | 1.000E+000 |
| | | | | OEP-XHE-XL-NR03H | OPERATOR FAILS TO RECOVER OFFSITE POWER IN 3 HOURS | 2.149E-001 |
| | | | | SINGLE-UNIT-LOOP | PROBABILITY THAT THE LOOP IS A SINGLE UNIT | 4.180E-001 |
| | | | | /SSF-SBO | STANDBY SHUTDOWN FACILITY SEAL COOLING | 9.594E-001 |
| 9 | 51.86 | 0.92 | 2.725E-006 | IE-LOOP | LOSS OF OFFSITE POWER | 3.590E-002 |
| | | | | AFW-TDP-FS-TDP | AFW TURBINE DRIVEN PUMP FAILS TO START | 7.000E-003 |
| | | | | NSR-MDP-RUNA | FRACTION OF TIME NSR MDP TRAIN A IS RUNNING | 5.000E-001 |
| | | | | NSR-MDP-TM-1B | NSR MDP-1B UNAVAILABLE DUE TO T & M | 2.400E-002 |
| | | | | NSR-STR-PG-1A | FAILURE OF NSR MDP-1A STRAINER | 1.000E+000 |
| | | | | /OEP-XHE-XL-NR06H | OPERATOR FAILS TO RECOVER OFFSITE POWER IN 6 HOURS | 9.036E-001 |
| 10 | 52.67 | 0.81 | 2.396E-006 | IE-LOOP | LOSS OF OFFSITE POWER | 3.590E-002 |
| | | | | DUAL-UNIT-LOOP | Probability that a LOOP is a Dual Unit LOOP | 5.820E-001 |
| | | | | EPS-XHE-XL-NR03H | OPERATOR FAILS TO RECOVER EMERGENCY DIESEL IN 3 HOURS | 5.563E-001 |

Project : MCGU_3P Min Cut Upper Bound: 2.956E-004 **Slice Applied** This Partition: 2.494E-004

| Cut No. | % Total | % Cut Set | Prob./Frequency | Basic Event | Description | Event Prob. |
|---|---|---|---|---|---|---|
| | | | | NSR-STR-PG-1A | FAILURE OF NSR MDP-1A STRAINER | 1.000E+000 |
| | | | | NSR-XHE-XR-MDP1B | OPERATOR FAILS TO RESTORE NSR MDP-1B AFTER T & M | 1.000E-003 |
| | | | | OEP-XHE-XL-NR03H | OPERATOR FAILS TO RECOVER OFFSITE POWER IN 3 HOURS | 2.149E-001 |
| | | | | /SSF-SBO | STANDBY SHUTDOWN FACILITY SEAL COOLING | 9.594E-001 |
| 11 | 53.48 | 0.81 | 2.396E-006 | IE-LOOP | LOSS OF OFFSITE POWER | 3.590E-002 |
| | | | | DUAL-UNIT-LOOP | Probability that a LOOP is a Dual Unit LOOP | 5.820E-001 |
| | | | | EPS-MOV-CC-170B | FAILURE OF NSR/EPS MOV RN170B TO OPEN | 1.000E-003 |
| | | | | EPS-XHE-XL-NR03H | OPERATOR FAILS TO RECOVER EMERGENCY DIESEL IN 3 HOURS | 5.563E-001 |
| | | | | NSR-STR-PG-1A | FAILURE OF NSR MDP-1A STRAINER | 1.000E+000 |
| | | | | OEP-XHE-XL-NR03H | OPERATOR FAILS TO RECOVER OFFSITE POWER IN 3 HOURS | 2.149E-001 |
| | | | | /SSF-SBO | STANDBY SHUTDOWN FACILITY SEAL COOLING | 9.594E-001 |
| 12 | 54.29 | 0.81 | 2.396E-006 | IE-LOOP | LOSS OF OFFSITE POWER | 3.590E-002 |
| | | | | DUAL-UNIT-LOOP | Probability that a LOOP is a Dual Unit LOOP | 5.820E-001 |
| | | | | EPS-XHE-XL-NR03H | OPERATOR FAILS TO RECOVER EMERGENCY DIESEL IN 3 HOURS | 5.563E-001 |
| | | | | NSR-MOV-CC-RN9B | FAILURE TO OPEN NSR PUMP B SNSWP SUCTION MOV RN9B | 1.000E-003 |
| | | | | NSR-STR-PG-1A | FAILURE OF NSR MDP-1A STRAINER | 1.000E+000 |
| | | | | OEP-XHE-XL-NR03H | OPERATOR FAILS TO RECOVER OFFSITE POWER IN 3 HOURS | 2.149E-001 |
| | | | | /SSF-SBO | STANDBY SHUTDOWN FACILITY SEAL COOLING | 9.594E-001 |
| 13 | 54.99 | 0.70 | 2.065E-006 | IE-LOOP | LOSS OF OFFSITE POWER | 3.590E-002 |
| | | | | EPS-XHE-XL-NR03H | OPERATOR FAILS TO RECOVER EMERGENCY DIESEL IN 3 HOURS | 5.563E-001 |
| | | | | EPS-XHE-XM-XTIE | FAILURE TO X-TIE POWER FROM UNIT 2 DURING SINGLE UNIT LOOP | 1.000E-001 |
| | | | | NSR-MDP-RUNA | FRACTION OF TIME NSR MDP TRAIN A IS RUNNING | 5.000E-001 |
| | | | | NSR-MDP-TM-1B | NSR MDP-1B UNAVAILABLE DUE TO T & M | 2.400E-002 |
| | | | | NSR-STR-PG-1A | FAILURE OF NSR MDP-1A STRAINER | 1.000E+000 |
| | | | | OEP-XHE-XL-NR03H | OPERATOR FAILS TO RECOVER OFFSITE POWER IN 3 HOURS | 2.149E-001 |
| | | | | SINGLE-UNIT-LOOP | PROBABILITY THAT THE LOOP IS A SINGLE UNIT | 4.180E-001 |
| | | | | /SSF-SBO | STANDBY SHUTDOWN FACILITY SEAL COOLING | 9.594E-001 |
| 14 | 55.69 | 0.70 | 2.065E-006 | IE-LOOP | LOSS OF OFFSITE POWER | 3.590E-002 |
| | | | | EPS-DGN-TM-1B | DIESEL GENERATOR 1B UNAVAILABLE DUE TO TEST AND MAINTENANCE | 1.200E-002 |
| | | | | EPS-XHE-XL-NR03H | OPERATOR FAILS TO RECOVER EMERGENCY DIESEL IN 3 HOURS | 5.563E-001 |
| | | | | EPS-XHE-XM-XTIE | FAILURE TO X-TIE POWER FROM UNIT 2 DURING SINGLE UNIT LOOP | 1.000E-001 |
| | | | | NSR-STR-PG-1A | FAILURE OF NSR MDP-1A STRAINER | 1.000E+000 |
| | | | | OEP-XHE-XL-NR03H | OPERATOR FAILS TO RECOVER OFFSITE POWER IN 3 HOURS | 2.149E-001 |
| | | | | SINGLE-UNIT-LOOP | PROBABILITY THAT THE LOOP IS A SINGLE UNIT | 4.180E-001 |

Project : MCGU_3P Min Cut Upper Bound: 2.956E-004 **Slice Applied** This Partition: 2.494E-004

| Cut No. | % Total | % Cut Set | Prob./Frequency | Basic Event | Description | Event Prob. |
|---|---|---|---|---|---|---|
| | | | | /SSF-SBO | STANDBY SHUTDOWN FACILITY SEAL COOLING | 9.594E-001 |
| 15 | 56.35 | 0.66 | 1.946E-006 | IE-LOOP | LOSS OF OFFSITE POWER | 3.590E-002 |
| | | | | AFW-TDP-TM-TDP | AFW TDP UNAVAILABLE DUE TO TEST AND MAINTENANCE | 5.000E-003 |
| | | | | NSR-MDP-RUNA | FRACTION OF TIME NSR MDP TRAIN A IS RUNNING | 5.000E-001 |
| | | | | NSR-MDP-TM-1B | NSR MDP-1B UNAVAILABLE DUE TO T & M | 2.400E-002 |
| | | | | NSR-STR-PG-1A | FAILURE OF NSR MDP-1A STRAINER | 1.000E+000 |
| | | | | /OEP-XHE-XL-NR06H | OPERATOR FAILS TO RECOVER OFFSITE POWER IN 6 HOURS | 9.036E-001 |
| 16 | 56.89 | 0.54 | 1.598E-006 | IE-LOOP | LOSS OF OFFSITE POWER | 3.590E-002 |
| | | | | AFW-TDP-FR-TDP | AFW TURBINE DRIVEN PUMP FAILS TO RUN | 4.106E-003 |
| | | | | NSR-MDP-RUNA | FRACTION OF TIME NSR MDP TRAIN A IS RUNNING | 5.000E-001 |
| | | | | NSR-MDP-TM-1B | NSR MDP-1B UNAVAILABLE DUE TO T & M | 2.400E-002 |
| | | | | NSR-STR-PG-1A | FAILURE OF NSR MDP-1A STRAINER | 1.000E+000 |
| | | | | /OEP-XHE-XL-NR06H | OPERATOR FAILS TO RECOVER OFFSITE POWER IN 6 HOURS | 9.036E-001 |
| 17 | 57.40 | 0.51 | 1.508E-006 | IE-LOOP | LOSS OF OFFSITE POWER | 3.590E-002 |
| | | | | AFW-TDP-FS-TDP | AFW TURBINE DRIVEN PUMP FAILS TO START | 7.000E-003 |
| | | | | CVC-MDP-RUNB | Fraction of time CVC MDP train B is running | 5.000E-001 |
| | | | | NSR-MDP-RUNA | FRACTION OF TIME NSR MDP TRAIN A IS RUNNING | 5.000E-001 |
| | | | | NSR-MDP-TM-1B | NSR MDP-1B UNAVAILABLE DUE TO T & M | 2.400E-002 |
| | | | | NSR-STR-PG-1A | FAILURE OF NSR MDP-1A STRAINER | 1.000E+000 |
| 18 | 57.91 | 0.51 | 1.508E-006 | IE-LOOP | LOSS OF OFFSITE POWER | 3.590E-002 |
| | | | | AFW-TDP-FS-TDP | AFW TURBINE DRIVEN PUMP FAILS TO START | 7.000E-003 |
| | | | | CVC-MDP-RUNA | Fraction of time CVC MDP train A is running | 5.000E-001 |
| | | | | NSR-MDP-RUNA | FRACTION OF TIME NSR MDP TRAIN A IS RUNNING | 5.000E-001 |
| | | | | NSR-MDP-TM-1B | NSR MDP-1B UNAVAILABLE DUE TO T & M | 2.400E-002 |
| | | | | NSR-STR-PG-1A | FAILURE OF NSR MDP-1A STRAINER | 1.000E+000 |
| 19 | 58.40 | 0.49 | 1.444E-006 | IE-LOOP | LOSS OF OFFSITE POWER | 3.590E-002 |
| | | | | AFW-TDP-FS-TDP | AFW TURBINE DRIVEN PUMP FAILS TO START | 7.000E-003 |
| | | | | DUAL-UNIT-LOOP | Probability that a LOOP is a Dual Unit LOOP | 5.820E-001 |
| | | | | EPS-DGN-FR-1B | DIESEL GENERATOR 1B FAILS TO RUN | 2.411E-002 |
| | | | | EPS-XHE-XL-NR01H | OPERATOR FAILS TO RECOVER EMERGENCY DIESEL IN 1 HOUR | 7.720E-001 |
| | | | | NSR-STR-PG-1A | FAILURE OF NSR MDP-1A STRAINER | 1.000E+000 |
| | | | | OEP-XHE-XL-NR01H | OPERATOR FAILS TO RECOVER OFFSITE POWER IN 1 HOUR | 5.302E-001 |
| 20 | 58.89 | 0.49 | 1.440E-006 | IE-SLB | STEAM LINE BREAK | 1.200E-002 |
| | | | | MSS-VCF-HW-ISOL | SG ISOLATION FAILS BECAUSE OF HARDWARE FAULTS | 1.000E-002 |

Project : MCGU_3P Min Cut Upper Bound: 2.956E-004 **Slice Applied** This Partition: 2.494E-004

| Cut No. | % Total | % Cut Set | Prob./Frequency | Basic Event | Description | Event Prob. |
|---|---|---|---|---|---|---|
| | | | | NSR-MDP-RUNA | FRACTION OF TIME NSR MDP TRAIN A IS RUNNING | 5.000E-001 |
| | | | | NSR-MDP-TM-1B | NSR MDP-1B UNAVAILABLE DUE TO T & M | 2.400E-002 |
| | | | | NSR-STR-PG-1A | FAILURE OF NSR MDP-1A STRAINER | 1.000E+000 |
| 21 | 59.36 | 0.47 | 1.393E-006 | IE-LOOP | LOSS OF OFFSITE POWER | 3.590E-002 |
| | | | | DUAL-UNIT-LOOP | Probability that a LOOP is a Dual Unit LOOP | 5.820E-001 |
| | | | | EPS-DGN-FR-1A | DIESEL GENERATOR A FAILS TO RUN | 2.411E-002 |
| | | | | EPS-DGN-FR-1B | DIESEL GENERATOR 1B FAILS TO RUN | 2.411E-002 |
| | | | | EPS-XHE-XL-NR03H | OPERATOR FAILS TO RECOVER EMERGENCY DIESEL IN 3 HOURS | 5.563E-001 |
| | | | | OEP-XHE-XL-NR03H | OPERATOR FAILS TO RECOVER OFFSITE POWER IN 3 HOURS | 2.149E-001 |
| | | | | /SSF-SBO | STANDBY SHUTDOWN FACILITY SEAL COOLING | 9.594E-001 |
| 22 | 59.72 | 0.36 | 1.077E-006 | IE-LOOP | LOSS OF OFFSITE POWER | 3.590E-002 |
| | | | | AFW-TDP-TM-TDP | AFW TDP UNAVAILABLE DUE TO TEST AND MAINTENANCE | 5.000E-003 |
| | | | | CVC-MDP-RUNB | Fraction of time CVC MDP train B is running | 5.000E-001 |
| | | | | NSR-MDP-RUNA | FRACTION OF TIME NSR MDP TRAIN A IS RUNNING | 5.000E-001 |
| | | | | NSR-MDP-TM-1B | NSR MDP-1B UNAVAILABLE DUE TO T & M | 2.400E-002 |
| | | | | NSR-STR-PG-1A | FAILURE OF NSR MDP-1A STRAINER | 1.000E+000 |
| 23 | 60.08 | 0.36 | 1.077E-006 | IE-LOOP | LOSS OF OFFSITE POWER | 3.590E-002 |
| | | | | AFW-TDP-TM-TDP | AFW TDP UNAVAILABLE DUE TO TEST AND MAINTENANCE | 5.000E-003 |
| | | | | CVC-MDP-RUNA | Fraction of time CVC MDP train A is running | 5.000E-001 |
| | | | | NSR-MDP-RUNA | FRACTION OF TIME NSR MDP TRAIN A IS RUNNING | 5.000E-001 |
| | | | | NSR-MDP-TM-1B | NSR MDP-1B UNAVAILABLE DUE TO T & M | 2.400E-002 |
| | | | | NSR-STR-PG-1A | FAILURE OF NSR MDP-1A STRAINER | 1.000E+000 |
| 24 | 60.43 | 0.35 | 1.031E-006 | IE-LOOP | LOSS OF OFFSITE POWER | 3.590E-002 |
| | | | | AFW-TDP-TM-TDP | AFW TDP UNAVAILABLE DUE TO TEST AND MAINTENANCE | 5.000E-003 |
| | | | | DUAL-UNIT-LOOP | Probability that a LOOP is a Dual Unit LOOP | 5.820E-001 |
| | | | | EPS-DGN-FR-1B | DIESEL GENERATOR 1B FAILS TO RUN | 2.411E-002 |
| | | | | EPS-XHE-XL-NR01H | OPERATOR FAILS TO RECOVER EMERGENCY DIESEL IN 1 HOUR | 7.720E-001 |
| | | | | NSR-STR-PG-1A | FAILURE OF NSR MDP-1A STRAINER | 1.000E+000 |
| | | | | OEP-XHE-XL-NR01H | OPERATOR FAILS TO RECOVER OFFSITE POWER IN 1 HOUR | 5.302E-001 |
| 25 | 60.77 | 0.34 | 1.008E-006 | IE-SLB | STEAM LINE BREAK | 1.200E-002 |
| | | | | AFW-TDP-FS-TDP | AFW TURBINE DRIVEN PUMP FAILS TO START | 7.000E-003 |
| | | | | NSR-MDP-RUNA | FRACTION OF TIME NSR MDP TRAIN A IS RUNNING | 5.000E-001 |
| | | | | NSR-MDP-TM-1B | NSR MDP-1B UNAVAILABLE DUE TO T & M | 2.400E-002 |
| | | | | NSR-STR-PG-1A | FAILURE OF NSR MDP-1A STRAINER | 1.000E+000 |

Project : MCGU_3P Min Cut Upper Bound: 2.956E-004 **Slice Applied** This Partition: 2.494E-004

| Cut No. | % Total | % Cut Set | Prob./Frequency | Basic Event | Description | Event Prob. |
|---|---|---|---|---|---|---|
| 26 | 61.11 | 0.34 | 9.996E-007 | IE-LOOP | LOSS OF OFFSITE POWER | 3.590E-002 |
| | | | | DUAL-UNIT-LOOP | Probability that a LOOP is a Dual Unit LOOP | 5.820E-001 |
| | | | | EPS-DGN-CF-RUN | COMMON CAUSE FAILURE OF DIESEL GENERATORS TO RUN | 4.172E-004 |
| | | | | EPS-XHE-XL-NR03H | OPERATOR FAILS TO RECOVER EMERGENCY DIESEL IN 3 HOURS | 5.563E-001 |
| | | | | OEP-XHE-XL-NR03H | OPERATOR FAILS TO RECOVER OFFSITE POWER IN 3 HOURS | 2.149E-001 |
| | | | | /SSF-SBO | STANDBY SHUTDOWN FACILITY SEAL COOLING | 9.594E-001 |
| 27 | 61.41 | 0.30 | 8.843E-007 | IE-LOOP | LOSS OF OFFSITE POWER | 3.590E-002 |
| | | | | AFW-TDP-FR-TDP | AFW TURBINE DRIVEN PUMP FAILS TO RUN | 4.106E-003 |
| | | | | CVC-MDP-RUNB | Fraction of time CVC MDP train B is running | 5.000E-001 |
| | | | | NSR-MDP-RUNA | FRACTION OF TIME NSR MDP TRAIN A IS RUNNING | 5.000E-001 |
| | | | | NSR-MDP-TM-1B | NSR MDP-1B UNAVAILABLE DUE TO T & M | 2.400E-002 |
| | | | | NSR-STR-PG-1A | FAILURE OF NSR MDP-1A STRAINER | 1.000E+000 |
| 28 | 61.71 | 0.30 | 8.843E-007 | IE-LOOP | LOSS OF OFFSITE POWER | 3.590E-002 |
| | | | | AFW-TDP-FR-TDP | AFW TURBINE DRIVEN PUMP FAILS TO RUN | 4.106E-003 |
| | | | | CVC-MDP-RUNA | Fraction of time CVC MDP train A is running | 5.000E-001 |
| | | | | NSR-MDP-RUNA | FRACTION OF TIME NSR MDP TRAIN A IS RUNNING | 5.000E-001 |
| | | | | NSR-MDP-TM-1B | NSR MDP-1B UNAVAILABLE DUE TO T & M | 2.400E-002 |
| | | | | NSR-STR-PG-1A | FAILURE OF NSR MDP-1A STRAINER | 1.000E+000 |
| 29 | 62.00 | 0.29 | 8.605E-007 | IE-LOOP | LOSS OF OFFSITE POWER | 3.590E-002 |
| | | | | EPS-DGN-FS-1B | DIESEL GENERATOR 1B FAILS TO START | 5.000E-003 |
| | | | | EPS-XHE-XL-NR03H | OPERATOR FAILS TO RECOVER EMERGENCY DIESEL IN 3 HOURS | 5.563E-001 |
| | | | | EPS-XHE-XM-XTIE | FAILURE TO X-TIE POWER FROM UNIT 2 DURING SINGLE UNIT LOOP | 1.000E-001 |
| | | | | NSR-STR-PG-1A | FAILURE OF NSR MDP-1A STRAINER | 1.000E+000 |
| | | | | OEP-XHE-XL-NR03H | OPERATOR FAILS TO RECOVER OFFSITE POWER IN 3 HOURS | 2.149E-001 |
| | | | | SINGLE-UNIT-LOOP | PROBABILITY THAT THE LOOP IS A SINGLE UNIT | 4.180E-001 |
| | | | | /SSF-SBO | STANDBY SHUTDOWN FACILITY SEAL COOLING | 9.594E-001 |
| 30 | 62.29 | 0.29 | 8.468E-007 | IE-LOOP | LOSS OF OFFSITE POWER | 3.590E-002 |
| | | | | AFW-TDP-FR-TDP | AFW TURBINE DRIVEN PUMP FAILS TO RUN | 4.106E-003 |
| | | | | DUAL-UNIT-LOOP | Probability that a LOOP is a Dual Unit LOOP | 5.820E-001 |
| | | | | EPS-DGN-FR-1B | DIESEL GENERATOR 1B FAILS TO RUN | 2.411E-002 |
| | | | | EPS-XHE-XL-NR01H | OPERATOR FAILS TO RECOVER EMERGENCY DIESEL IN 1 HOUR | 7.720E-001 |
| | | | | NSR-STR-PG-1A | FAILURE OF NSR MDP-1A STRAINER | 1.000E+000 |
| | | | | OEP-XHE-XL-NR01H | OPERATOR FAILS TO RECOVER OFFSITE POWER IN 1 HOUR | 5.302E-001 |
| 31 | 62.57 | 0.28 | 8.245E-007 | IE-LOOP | LOSS OF OFFSITE POWER | 3.590E-002 |

Project : MCGU_3P Min Cut Upper Bound: 2.956E-004 **Slice Applied** This Partition: 2.494E-004

| Cut No. | % Total | % Cut Set | Prob./Frequency | Basic Event | Description | Event Prob. |
|---|---|---|---|---|---|---|
| | | | | AFW-TDP-FS-TDP | AFW TURBINE DRIVEN PUMP FAILS TO START | 7.000E-003 |
| | | | | DUAL-UNIT-LOOP | Probability that a LOOP is a Dual Unit LOOP | 5.820E-001 |
| | | | | NSR-MDP-RUNA | FRACTION OF TIME NSR MDP TRAIN A IS RUNNING | 5.000E-001 |
| | | | | NSR-MDP-TM-1B | NSR MDP-1B UNAVAILABLE DUE TO T & M | 2.400E-002 |
| | | | | NSR-STR-PG-1A | FAILURE OF NSR MDP-1A STRAINER | 1.000E+000 |
| | | | | /OEP-XHE-XL-NR01H | OPERATOR FAILS TO RECOVER OFFSITE POWER IN 1 HOUR | 4.698E-001 |
| 32 | 62.81 | 0.24 | 7.200E-007 | IE-SLB | STEAM LINE BREAK | 1.200E-002 |
| | | | | CVC-MDP-RUNA | Fraction of time CVC MDP train A is running | 5.000E-001 |
| | | | | NSR-MDP-RUNA | FRACTION OF TIME NSR MDP TRAIN A IS RUNNING | 5.000E-001 |
| | | | | NSR-MDP-TM-1B | NSR MDP-1B UNAVAILABLE DUE TO T & M | 2.400E-002 |
| | | | | NSR-STR-PG-1A | FAILURE OF NSR MDP-1A STRAINER | 1.000E+000 |
| | | | | PCS-SGT-RP-SLBISGTR | STEAM LINE BREAK INDUCES A STEAM GENERATOR TUBE RUPTURE | 1.000E-002 |
| 33 | 63.05 | 0.24 | 7.200E-007 | IE-SLB | STEAM LINE BREAK | 1.200E-002 |
| | | | | CVC-MDP-RUNB | Fraction of time CVC MDP train B is running | 5.000E-001 |
| | | | | NSR-MDP-RUNA | FRACTION OF TIME NSR MDP TRAIN A IS RUNNING | 5.000E-001 |
| | | | | NSR-MDP-TM-1B | NSR MDP-1B UNAVAILABLE DUE TO T & M | 2.400E-002 |
| | | | | NSR-STR-PG-1A | FAILURE OF NSR MDP-1A STRAINER | 1.000E+000 |
| | | | | PCS-SGT-RP-SLBISGTR | STEAM LINE BREAK INDUCES A STEAM GENERATOR TUBE RUPTURE | 1.000E-002 |
| 34 | 63.29 | 0.24 | 7.200E-007 | IE-SLB | STEAM LINE BREAK | 1.200E-002 |
| | | | | CVC-MDP-RUNA | Fraction of time CVC MDP train A is running | 5.000E-001 |
| | | | | MSS-VCF-HW-ISOL | SG ISOLATION FAILS BECAUSE OF HARDWARE FAULTS | 1.000E-002 |
| | | | | NSR-MDP-RUNA | FRACTION OF TIME NSR MDP TRAIN A IS RUNNING | 5.000E-001 |
| | | | | NSR-MDP-TM-1B | NSR MDP-1B UNAVAILABLE DUE TO T & M | 2.400E-002 |
| | | | | NSR-STR-PG-1A | FAILURE OF NSR MDP-1A STRAINER | 1.000E+000 |
| 35 | 63.53 | 0.24 | 7.200E-007 | IE-SLB | STEAM LINE BREAK | 1.200E-002 |
| | | | | CVC-MDP-RUNB | Fraction of time CVC MDP train B is running | 5.000E-001 |
| | | | | MSS-VCF-HW-ISOL | SG ISOLATION FAILS BECAUSE OF HARDWARE FAULTS | 1.000E-002 |
| | | | | NSR-MDP-RUNA | FRACTION OF TIME NSR MDP TRAIN A IS RUNNING | 5.000E-001 |
| | | | | NSR-MDP-TM-1B | NSR MDP-1B UNAVAILABLE DUE TO T & M | 2.400E-002 |
| | | | | NSR-STR-PG-1A | FAILURE OF NSR MDP-1A STRAINER | 1.000E+000 |
| 36 | 63.77 | 0.24 | 7.200E-007 | IE-SLB | STEAM LINE BREAK | 1.200E-002 |
| | | | | AFW-TDP-TM-TDP | AFW TDP UNAVAILABLE DUE TO TEST AND MAINTENANCE | 5.000E-003 |

Project : MCGU_3P Min Cut Upper Bound: 2.956E-004 **Slice Applied** This Partition: 2.494E-004

| Cut No. | % Total | % Cut Set | Prob./Frequency | Basic Event | Description | Event Prob. |
|---|---|---|---|---|---|---|
| | | | | NSR-MDP-RUNA | FRACTION OF TIME NSR MDP TRAIN A IS RUNNING | 5.000E-001 |
| | | | | NSR-MDP-TM-1B | NSR MDP-1B UNAVAILABLE DUE TO T & M | 2.400E-002 |
| | | | | NSR-STR-PG-1A | FAILURE OF NSR MDP-1A STRAINER | 1.000E+000 |
| 37 | 64.01 | 0.24 | 7.185E-007 | IE-LOOP | LOSS OF OFFSITE POWER | 3.590E-002 |
| | | | | AFW-TDP-FS-TDP | AFW TURBINE DRIVEN PUMP FAILS TO START | 7.000E-003 |
| | | | | DUAL-UNIT-LOOP | Probability that a LOOP is a Dual Unit LOOP | 5.820E-001 |
| | | | | EPS-XHE-XL-NR01H | OPERATOR FAILS TO RECOVER EMERGENCY DIESEL IN 1 HOUR | 7.720E-001 |
| | | | | NSR-MDP-RUNA | FRACTION OF TIME NSR MDP TRAIN A IS RUNNING | 5.000E-001 |
| | | | | NSR-MDP-TM-1B | NSR MDP-1B UNAVAILABLE DUE TO T & M | 2.400E-002 |
| | | | | NSR-STR-PG-1A | FAILURE OF NSR MDP-1A STRAINER | 1.000E+000 |
| | | | | OEP-XHE-XL-NR01H | OPERATOR FAILS TO RECOVER OFFSITE POWER IN 1 HOUR | 5.302E-001 |
| 38 | 64.25 | 0.24 | 7.185E-007 | IE-LOOP | LOSS OF OFFSITE POWER | 3.590E-002 |
| | | | | AFW-TDP-FS-TDP | AFW TURBINE DRIVEN PUMP FAILS TO START | 7.000E-003 |
| | | | | DUAL-UNIT-LOOP | Probability that a LOOP is a Dual Unit LOOP | 5.820E-001 |
| | | | | EPS-DGN-TM-1B | DIESEL GENERATOR 1B UNAVAILABLE DUE TO TEST AND MAINTENANCE | 1.200E-002 |
| | | | | EPS-XHE-XL-NR01H | OPERATOR FAILS TO RECOVER EMERGENCY DIESEL IN 1 HOUR | 7.720E-001 |
| | | | | NSR-STR-PG-1A | FAILURE OF NSR MDP-1A STRAINER | 1.000E+000 |
| | | | | OEP-XHE-XL-NR01H | OPERATOR FAILS TO RECOVER OFFSITE POWER IN 1 HOUR | 5.302E-001 |
| 39 | 64.48 | 0.23 | 6.933E-007 | IE-LOOP | LOSS OF OFFSITE POWER | 3.590E-002 |
| | | | | DUAL-UNIT-LOOP | Probability that a LOOP is a Dual Unit LOOP | 5.820E-001 |
| | | | | EPS-DGN-FR-1B | DIESEL GENERATOR 1B FAILS TO RUN | 2.411E-002 |
| | | | | EPS-DGN-TM-1A | DIESEL GENERATOR A UNAVAILABLE DUE TO TEST AND MAINTENANCE | 1.200E-002 |
| | | | | EPS-XHE-XL-NR03H | OPERATOR FAILS TO RECOVER EMERGENCY DIESEL IN 3 HOURS | 5.563E-001 |
| | | | | OEP-XHE-XL-NR03H | OPERATOR FAILS TO RECOVER OFFSITE POWER IN 3 HOURS | 2.149E-001 |
| | | | | /SSF-SBO | STANDBY SHUTDOWN FACILITY SEAL COOLING | 9.594E-001 |
| 40 | 64.71 | 0.23 | 6.933E-007 | IE-LOOP | LOSS OF OFFSITE POWER | 3.590E-002 |
| | | | | DUAL-UNIT-LOOP | Probability that a LOOP is a Dual Unit LOOP | 5.820E-001 |
| | | | | EPS-DGN-FR-1A | DIESEL GENERATOR A FAILS TO RUN | 2.411E-002 |
| | | | | EPS-DGN-TM-1B | DIESEL GENERATOR 1B UNAVAILABLE DUE TO TEST AND MAINTENANCE | 1.200E-002 |
| | | | | EPS-XHE-XL-NR03H | OPERATOR FAILS TO RECOVER EMERGENCY DIESEL IN 3 HOURS | 5.563E-001 |
| | | | | OEP-XHE-XL-NR03H | OPERATOR FAILS TO RECOVER OFFSITE POWER IN 3 HOURS | 2.149E-001 |
| | | | | /SSF-SBO | STANDBY SHUTDOWN FACILITY SEAL COOLING | 9.594E-001 |
| 41 | 64.94 | 0.23 | 6.933E-007 | IE-LOOP | LOSS OF OFFSITE POWER | 3.590E-002 |
| | | | | DUAL-UNIT-LOOP | Probability that a LOOP is a Dual Unit LOOP | 5.820E-001 |

Project : MCGU_3P Min Cut Upper Bound: 2.956E-004 **Slice Applied** This Partition: 2.494E-004

| Cut No. | % Total | % Cut Set | Prob./Frequency | Basic Event | Description | Event Prob. |
|---|---|---|---|---|---|---|
| | | | | EPS-DGN-FR-1A | DIESEL GENERATOR A FAILS TO RUN | 2.411E-002 |
| | | | | EPS-XHE-XL-NR03H | OPERATOR FAILS TO RECOVER EMERGENCY DIESEL IN 3 HOURS | 5.563E-001 |
| | | | | NSR-MDP-RUNA | FRACTION OF TIME NSR MDP TRAIN A IS RUNNING | 5.000E-001 |
| | | | | NSR-MDP-TM-1B | NSR MDP-1B UNAVAILABLE DUE TO T & M | 2.400E-002 |
| | | | | OEP-XHE-XL-NR03H | OPERATOR FAILS TO RECOVER OFFSITE POWER IN 3 HOURS | 2.149E-001 |
| | | | | /SSF-SBO | STANDBY SHUTDOWN FACILITY SEAL COOLING | 9.594E-001 |
| 42 | 65.17 | 0.23 | 6.933E-007 | IE-LOOP | LOSS OF OFFSITE POWER | 3.590E-002 |
| | | | | DUAL-UNIT-LOOP | Probability that a LOOP is a Dual Unit LOOP | 5.820E-001 |
| | | | | EPS-DGN-FR-1B | DIESEL GENERATOR 1B FAILS TO RUN | 2.411E-002 |
| | | | | EPS-XHE-XL-NR03H | OPERATOR FAILS TO RECOVER EMERGENCY DIESEL IN 3 HOURS | 5.563E-001 |
| | | | | NSR-MDP-RUNB | FRACTION OF TIME NSR MDP TRAIN B IS RUNNING | 5.000E-001 |
| | | | | NSR-MDP-TM-1A | NSR MDP-1A UNAVAILABLE DUE TO T & M | 2.400E-002 |
| | | | | OEP-XHE-XL-NR03H | OPERATOR FAILS TO RECOVER OFFSITE POWER IN 3 HOURS | 2.149E-001 |
| | | | | /SSF-SBO | STANDBY SHUTDOWN FACILITY SEAL COOLING | 9.594E-001 |
| 43 | 65.37 | 0.20 | 5.912E-007 | IE-SLB | STEAM LINE BREAK | 1.200E-002 |
| | | | | AFW-TDP-FR-TDP | AFW TURBINE DRIVEN PUMP FAILS TO RUN | 4.106E-003 |
| | | | | NSR-MDP-RUNA | FRACTION OF TIME NSR MDP TRAIN A IS RUNNING | 5.000E-001 |
| | | | | NSR-MDP-TM-1B | NSR MDP-1B UNAVAILABLE DUE TO T & M | 2.400E-002 |
| | | | | NSR-STR-PG-1A | FAILURE OF NSR MDP-1A STRAINER | 1.000E+000 |
| 44 | 65.57 | 0.20 | 5.889E-007 | IE-LOOP | LOSS OF OFFSITE POWER | 3.590E-002 |
| | | | | AFW-TDP-TM-TDP | AFW TDP UNAVAILABLE DUE TO TEST AND MAINTENANCE | 5.000E-003 |
| | | | | DUAL-UNIT-LOOP | Probability that a LOOP is a Dual Unit LOOP | 5.820E-001 |
| | | | | NSR-MDP-RUNA | FRACTION OF TIME NSR MDP TRAIN A IS RUNNING | 5.000E-001 |
| | | | | NSR-MDP-TM-1B | NSR MDP-1B UNAVAILABLE DUE TO T & M | 2.400E-002 |
| | | | | NSR-STR-PG-1A | FAILURE OF NSR MDP-1A STRAINER | 1.000E+000 |
| | | | | /OEP-XHE-XL-NR01H | OPERATOR FAILS TO RECOVER OFFSITE POWER IN 1 HOUR | 4.698E-001 |
| 45 | 65.76 | 0.19 | 5.750E-007 | IE-LOOP | LOSS OF OFFSITE POWER | 3.590E-002 |
| | | | | DUAL-UNIT-LOOP | Probability that a LOOP is a Dual Unit LOOP | 5.820E-001 |
| | | | | EPS-FAN-FR-EX1B2 | FAILURE OF DIESEL GENERATOR 1B FAN 1B2 TO RUN | 2.400E-004 |
| | | | | EPS-XHE-XL-NR03H | OPERATOR FAILS TO RECOVER EMERGENCY DIESEL IN 3 HOURS | 5.563E-001 |
| | | | | NSR-STR-PG-1A | FAILURE OF NSR MDP-1A STRAINER | 1.000E+000 |
| | | | | OEP-XHE-XL-NR03H | OPERATOR FAILS TO RECOVER OFFSITE POWER IN 3 HOURS | 2.149E-001 |
| | | | | /SSF-SBO | STANDBY SHUTDOWN FACILITY SEAL COOLING | 9.594E-001 |
| 46 | 65.95 | 0.19 | 5.750E-007 | IE-LOOP | LOSS OF OFFSITE POWER | 3.590E-002 |

Project : MCGU_3P Min Cut Upper Bound: 2.956E-004 **Slice Applied** This Partition: 2.494E-004

| Cut No. | % Total | % Cut Set | Prob./Frequency | Basic Event | Description | Event Prob. |
|---|---|---|---|---|---|---|
| | | | | DUAL-UNIT-LOOP | Probability that a LOOP is a Dual Unit LOOP | 5.820E-001 |
| | | | | EPS-FAN-FR-EX1B1 | FAILURE OF DIESEL GENERATOR 1B FAN 1B1 TO RUN | 2.400E-004 |
| | | | | EPS-XHE-XL-NR03H | OPERATOR FAILS TO RECOVER EMERGENCY DIESEL IN 3 HOURS | 5.563E-001 |
| | | | | NSR-STR-PG-1A | FAILURE OF NSR MDP-1A STRAINER | 1.000E+000 |
| | | | | OEP-XHE-XL-NR03H | OPERATOR FAILS TO RECOVER OFFSITE POWER IN 3 HOURS | 2.149E-001 |
| | | | | /SSF-SBO | STANDBY SHUTDOWN FACILITY SEAL COOLING | 9.594E-001 |
| 47 | 66.12 | 0.17 | 5.163E-007 | IE-LOOP | LOSS OF OFFSITE POWER | 3.590E-002 |
| | | | | EPS-FAN-FS-EX1B2 | FAILURE OF DIESEL GENERATOR 1B FAN 1B2 TO START | 3.000E-003 |
| | | | | EPS-XHE-XL-NR03H | OPERATOR FAILS TO RECOVER EMERGENCY DIESEL IN 3 HOURS | 5.563E-001 |
| | | | | EPS-XHE-XM-XTIE | FAILURE TO X-TIE POWER FROM UNIT 2 DURING SINGLE UNIT LOOP | 1.000E-001 |
| | | | | NSR-STR-PG-1A | FAILURE OF NSR MDP-1A STRAINER | 1.000E+000 |
| | | | | OEP-XHE-XL-NR03H | OPERATOR FAILS TO RECOVER OFFSITE POWER IN 3 HOURS | 2.149E-001 |
| | | | | SINGLE-UNIT-LOOP | PROBABILITY THAT THE LOOP IS A SINGLE UNIT | 4.180E-001 |
| | | | | /SSF-SBO | STANDBY SHUTDOWN FACILITY SEAL COOLING | 9.594E-001 |
| 48 | 66.29 | 0.17 | 5.163E-007 | IE-LOOP | LOSS OF OFFSITE POWER | 3.590E-002 |
| | | | | EPS-FAN-FS-EX1B1 | FAILURE OF DIESEL GENERATOR 1B FAN 1B1 TO START | 3.000E-003 |
| | | | | EPS-XHE-XL-NR03H | OPERATOR FAILS TO RECOVER EMERGENCY DIESEL IN 3 HOURS | 5.563E-001 |
| | | | | EPS-XHE-XM-XTIE | FAILURE TO X-TIE POWER FROM UNIT 2 DURING SINGLE UNIT LOOP | 1.000E-001 |
| | | | | NSR-STR-PG-1A | FAILURE OF NSR MDP-1A STRAINER | 1.000E+000 |
| | | | | OEP-XHE-XL-NR03H | OPERATOR FAILS TO RECOVER OFFSITE POWER IN 3 HOURS | 2.149E-001 |
| | | | | SINGLE-UNIT-LOOP | PROBABILITY THAT THE LOOP IS A SINGLE UNIT | 4.180E-001 |
| | | | | /SSF-SBO | STANDBY SHUTDOWN FACILITY SEAL COOLING | 9.594E-001 |
| 49 | 66.46 | 0.17 | 5.132E-007 | IE-LOOP | LOSS OF OFFSITE POWER | 3.590E-002 |
| | | | | AFW-TDP-TM-TDP | AFW TDP UNAVAILABLE DUE TO TEST AND MAINTENANCE | 5.000E-003 |
| | | | | DUAL-UNIT-LOOP | Probability that a LOOP is a Dual Unit LOOP | 5.820E-001 |
| | | | | EPS-XHE-XL-NR01H | OPERATOR FAILS TO RECOVER EMERGENCY DIESEL IN 1 HOUR | 7.720E-001 |
| | | | | NSR-MDP-RUNA | FRACTION OF TIME NSR MDP TRAIN A IS RUNNING | 5.000E-001 |
| | | | | NSR-MDP-TM-1B | NSR MDP-1B UNAVAILABLE DUE TO T & M | 2.400E-002 |
| | | | | NSR-STR-PG-1A | FAILURE OF NSR MDP-1A STRAINER | 1.000E+000 |
| | | | | OEP-XHE-XL-NR01H | OPERATOR FAILS TO RECOVER OFFSITE POWER IN 1 HOUR | 5.302E-001 |
| 50 | 66.63 | 0.17 | 5.132E-007 | IE-LOOP | LOSS OF OFFSITE POWER | 3.590E-002 |
| | | | | AFW-TDP-TM-TDP | AFW TDP UNAVAILABLE DUE TO TEST AND MAINTENANCE | 5.000E-003 |
| | | | | DUAL-UNIT-LOOP | Probability that a LOOP is a Dual Unit LOOP | 5.820E-001 |
| | | | | EPS-DGN-TM-1B | DIESEL GENERATOR 1B UNAVAILABLE DUE TO TEST AND MAINTENANCE | 1.200E-002 |

ATTACHMENT J – SLICE LOOP / SLB INITIATIORS W/ LOSS OF 'A' TRAIN NO SEALLOCA SEQUENCES

Project : MCGU_3P Min Cut Upper Bound: 2.956E-004 **Slice Applied** This Partition: 2.494E-004

| Cut No. | % Total | % Cut Set | Prob./Frequency | Basic Event | Description | Event Prob. |
|---|---|---|---|---|---|---|
| | | | | EPS-XHE-XL-NR01H | OPERATOR FAILS TO RECOVER EMERGENCY DIESEL IN 1 HOUR | 7.720E-001 |
| | | | | NSR-STR-PG-1A | FAILURE OF NSR MDP-1A STRAINER | 1.000E+000 |
| | | | | OEP-XHE-XL-NR01H | OPERATOR FAILS TO RECOVER OFFSITE POWER IN 1 HOUR | 5.302E-001 |

**SDP PHASE 1 SCREENING WORKSHEET FOR INITIATING EVENTS, MITIGATION SYSTEMS, AND BARRIERS CORNERSTONES**

**Reference/Title** (LER #, Inspection Report #, etc): Unit 1 and 2 inability to perform safety-related backwash of suction strainers on both trains of Nuclear Service Water.
LER # 369/2007-04
IR 05000369,370/2007005
PIP M-02-2427
PIP M-07-4313

**Performance Deficiency** (concise statement clearly stating deficient licensee performance):
The performance deficiency concerns the failure of the licensee to adequately correct a significant condition adverse to quality identified in 2002 related to a change in the Lake Norman environmental conditions associated with fish deaths causing macro-fouling problems with the nuclear service water (RN) system pump strainers. More specifically, the safety-related RN strainer backwash system that was credited to preclude the fouling problem, utilized nonsafety-related instrument air (VI) to maintain each RN pump's strainer backwash discharge valve open; but, did not provide a manual bypass around the discharge valve to support backwash operations upon a loss of VI. As such, there was a lack of reasonable assurance that the RN system would be able to perform its safety-related function upon a loss of VI during the seasonal macro-fowling periods.

**Factual Description of Condition** (statement of facts known about the condition that resulted from the performance deficiency, without hypothetical failures included): All RN trains are normally aligned to Lake Norman for their suction source. The strainer backwash feature is important to ensure RN is capable of performing its intended safety function only when macro-fouling concerns are present that would challenge these strainers. Alewife fish are considered the major credible source of macro-fouling because they sink when they die, rather than float like other fish. They are present in heavy populations in front of the Cowans Ford Dam during various times of the year. During late July and early August, seasonal lake changing conditions cause them to die and sink to the bottom of the lake. Those near the intake structure will be sucked into the RN intake and proceed to the strainers which are located directly upstream of each of the RN pumps. Therefore, the performance deficiency is of concern during the periods of time when the Alewife fish die. The Standby Nuclear Service Water Pond surveys have shown no Alewife populations or any other macro-fouling concerns.

The following three event scenarios during the macro-fouling period are affected by the performance deficiency:

(1) Any event which would cause a safety injection (SI) to occur would ensure both of the affected Unit's RN pumps were running and automatically isolate VI to the strainer backwash function for that Unit (even without a loss of VI). Also after a SI signal, Unit 1 and Unit 2 "A" trains of RN service water suction source remain aligned to Lake Norman while the "B" trains automatically align to the Standby Nuclear Service Water Pond (SNSWP) where macro-fouling is not an issue. At the point of transfer, the affected Unit's "B" train strainer would be degraded to the auto backwash setpoint of 1.86 psid. The SNSWP does not have alewife macro-fouling concerns, and therefore, the "B" train would be operable. The affected Unit's "A" train, which is aligned to Lake Norman, would continue to be subjected to large Alewife populations without the ability to perform backwashes on the strainer; thereby, resulting in a loss of that Unit's "A" train of RN.

(2) On a Loss of Offsite Power (LOOP) event, VI is lost because of the loss of the non-safety buses supplying power to the normally operating VI electric air compressors. Without recovery of VI by the site's diesel air compressors, safety backwashes could not be performed. However, on a LOOP, the "B" trains of RN receive a signal to automatically swap to the SNSWP where macro-fouling is not an issue (similar to when an SI signal is received). At the point of transfer, the "B" train strainers would be degraded to the auto backwash setpoint of 1.86 psid. The SNSWP does not have alewife macro-fouling concerns and thus the "B" trains would be operable. The "A" trains which remained aligned to Lake Norman would continue to be subjected to large Alewife populations without the ability to perform backwashes on the strainer (unless VI is restored), resulting in the loss of the Unit 1 and Unit 2 "A" RN trains. (Note: As a result of the LOOP induced turbine trip/reactor trip on the affected Unit(s), the Unit's motor driven auxiliary feedwater pumps [MDAFW] pumps and RN pumps will start.)

(3) On a loss of VI without a LOOP, the strainer backwash function (both automatic and manual) could not be performed. Since there is no SI or LOOP, there is no signal to automatically align the "B" RN trains to the SNSWP. Due to the shared loss of VI, both Units' feedwater regulation valves (FRVs) would close, causing both units to trip on low steam generator level and the subsequent start of both MDAFW pumps . Each MDAFW pump train has an interlock with its associated RN pump train to auto start the RN pump when the MDAFW pump starts. The result would be both "A" and "B" trains of RN on both Units taking suction from Lake Norman without backwash capability. This would cause a degradation and eventual loss of RN to both trains and both units.

The Updated Final Safety Analysis Report (UFSAR) and Design Basis Documents (DBD) state that the RN Strainer would have the ability to be manually backwashed during accident conditions regardless of suction source. The credited strainer backwash system and associated procedure changes did not preserve these UFSAR and DBD requirements. Specifically:

- A modification was made in which VI was relied upon as the motive force to open valves required to manually backwash RN Strainers. VI is non-safety and cannot be counted on during accident conditions.

- It was determined that the differential pressure gages relied upon for driving operator action to perform manual backwashes were never classified/treated as PAM instrumentation per Reg. Guide 1.97.

- The control room annunciators for RN strainer D/P are not safety-related.

- The tubing between the safety-related instrument air solenoid isolation valves and the backwash valve actuators is nonsafety-related.

- RN strainer backwash discharges through a nonsafety-related (non-seismically qualified) flowpath

The licensee's Engineering Directives Manual (EDM) 601, Engineering Review Screen, for the design modification checklist covers all of the above discrepancies, but was not performed because the modification (to make the existing nonsafety-related system, safety-related) was incorrectly determined to require no fieldwork.

**System(s)/Train(s) Degraded by Condition:** Unit 1 and Unit 2 "A" trains of RN whose water suction source remained aligned to Lake Norman after a SI signal or a loss of VI. Unit 1 and Unit 2 "B" trains of RN whose water suction source remained aligned to Lake Norman after a loss of VI.

**Licensing Basis Function of System(s)/Train(s):** The Technical Specification bases state that the principal safety-related function of the Nuclear Service Water System (RN) is the removal of decay heat from the reactor via the Component Cooling Water System (KC) during a Design Basis Accident (DBA) or transient. This requires that the RN system can maintain required cooling water flow rates to essential heat exchangers during the DBA. In addition, RN provides the alternative safety related feedwater supply to the auxiliary feedwater pumps for feeding steam generators, after a loss of the preferred storage tank on loss of suction pressure.

A strainer is installed immediately upstream of each of the four RN pumps (2 pumps per unit). The related support function of the RN strainer is to ensure adequate suction pressure and flow rate are maintained during normal and accident conditions. Each strainer can be backwashed either automatically or manually. Under normal operation, strainer backwash can occur automatically (no operator action) as a result of a 120-hour timer sequence or excessive Strainer differential pressure (High D/P alarm) at 1.86 psid. In addition, there is a local pushbutton (electrical) initiation which also utilizes non-safety instrument air.

During a postulated Loss of Coolant Accident, a safety injection (SI) signal or loss of VI due to loss of offsite power (LOOP) from either unit will automatically realign the "B" train supply to the Standby Nuclear Service Water Pond (SNSWP) and supply the "B" RN header while the "A" train RN supply is automatically realigned (if not already there) to the low-level intake (LLI) from Lake Norman and supplies the "A" train RN header. The lake and pond suction sources feed the RN pumps through the strainers upstream of the RN pumps, such that if a strainer is already clogged without backwash

capability, switching suction sources does not provide an unclogged path to run the pump. Also during a DBA upon receipt of a SI signal the non-safety instrument air is isolated which defeats the capability to use the automatic and local pushbutton initiated backwash function for the RN strainers. The original design was for strainer backwash during accidents to be performed manually to prevent unnecessary loss of water from the system. The design basis clearly says that a manual backwash must always be able to be performed. In addition, the UFSAR says "During a LOCA, on receipt of a high pressure differential pressure signal, manual backwashes will be performed."

**Other Safety Function of System(s)/Train(s):**

**Maintenance Rule Category (check one):**

☒ risk-significant ☐ non risk-significant

**Time condition existed or is assumed to have existed:** The issue of increased Alewife fish populations in Lake Norman began in 7/02 until present. Safety-related manual backwashes were incapable of being performed up until recovery procedures and equipment were put in place in 8/07.

**CORNERSTONES AND FUNCTIONS DEGRADED AS A RESULT OF DEFICIENCY**

(☒) Check the appropriate boxes

| INITIATING EVENTS CORNERSTONE | MITIGATION SYSTEMS CORNERSTONE | BARRIERS CORNERSTONE |
|---|---|---|
| ☐ Primary System LOCA initiator contributor - (e.g., RCS leakage from pressurizer heater sleeves, RPV piping penetrations, CRDM nozzles, PORVs, SRVs, ISLOCA issues, etc.)<br><br>☐ Transient initiator contributor (e.g., reactor/turbine trip, loss of offsite power, loss of service water, main steam/feedwater piping degradations, etc.)<br><br>☐ Fire initiator contributor (e.g., transient loadings and combustibles, hotwork)<br><br>☐ Internal/external flooding initiator contributor | ☒ Core Decay Heat Removal Degraded<br><br>☐ Short Term Heat Removal Degraded<br><br>☐ Primary (e.g., Safety Inj, [main feedwater, HPCI, and RCIC - BWR only] )<br>____ High Pressure<br>____ Low Pressure<br><br>☐ Secondary - PWR only (e.g. AFW, main feedwater, ADVs)<br><br>☒ Long Term Heat Removal Degraded (e.g., ECCS sump recirculation, suppression pool)<br><br>☐ Reactivity Control Degraded<br><br>☐ Seismic/Fire/Flood/Severe Weather Protection Degraded | ☐ RCS Boundary as a mitigator following plant upset (e.g., pressurized thermal shock).<br>Note: all other RCS boundary issues, such as leaks, will be considered under the Initiating Events Cornerstone.<br><br>☐ Containment Barrier Degraded<br><br>☐ Reactor Containment Degraded<br>____ Actual Breach or Bypass<br>____ Heat Removal, Hydrogen or Pressure Control Degraded<br><br>☐ Control Room, Aux Bldg/Reactor Bldg, or Spent Fuel Bldg Barrier Degraded<br><br>☐ Fuel Cladding Barrier Degraded |

**SDP PHASE 1 SCREENING WORKSHEET FOR IE, MS, and B CORNERSTONES**

Check the appropriate boxes ✔

**IF** the finding is assumed to degrade:

1. fire protection defense-in-depth strategies involving: detection, suppression (equipment for both manual and automatic), barriers, fire prevention and administrative controls, and post fire safe shutdown systems, **THEN STOP. Go to** IMC 0609, Appendix F. Issues related to performance of the fire brigade are not included in Appendix F and require NRC management review.

2. steam generator tube integrity, **THEN STOP. Go to** IMC 0609, Appendix J.

3. the safety of an operating reactor, **THEN IDENTIFY** the degraded cornerstone(s):

   ☐ Initiating Event
   ☒ Mitigation Systems
   ☐ RCS Barrier (e.g., PTS issues)
   ☐ Fuel Barrier
   ☐ Containment Barriers

**IF TWO OR MORE** of the above cornerstones are degraded ➛ **THEN STOP. Go to Phase 2.**

**IF ONLY ONE** of the above cornerstones is degraded, **THEN CONTINUE** in the appropriate column on page 4 of 5 of this worksheet.

NOTE: When assessing the significance of a finding affecting multiple cornerstones, the finding should be assigned to the cornerstone that best reflects the dominant risk of the finding.

| Initiating Events Cornerstone | Mitigation Systems Cornerstone | RCS Barrier or Fuel Barrier | Containment Barriers Cornerstone |
|---|---|---|---|
| LOCA Initiators<br>1. Assuming worst case degradation, would the finding result in exceeding the Tech Spec limit for identified RCS leakage or could the finding have likely affected other mitigation systems resulting in a total loss of their safety function.<br><br>☐ **If YES ➛Stop. Go to Phase 2.**<br><br>☐ If NO, screen as Green.<br><br>Transient Initiators<br>1. Does the finding contribute to both the likelihood of a reactor trip AND the likelihood that mitigation equipment or functions will not be available?<br><br>☐ **If YES➛Stop. Go to Phase 2.**<br><br>☐ If NO, screen as Green.<br><br>External Event Initiators<br>1. Does the finding increase the likelihood of a fire or internal/external flood?<br><br>☐ **If YES** ➛ Use the IPEEE or other existing plant-specific analyses to identify core damage scenarios of concern and factors that increase the frequency. Provide this input for **Phase 3** analysis.<br><br>☐ If NO, screen as Green. | Is the finding a design or qualification deficiency confirmed not to result in loss of operability per "Part 9900, Technical Guidance, Operability Determination Process for Operability and Functional Assessment."<br><br>☐ **If YES, screen as Green.**<br><br>☒ If NO, continue.<br><br>2. Does the finding represent a loss of system safety function?<br><br>☒ **If YES ➛Stop. Go to Phase 2.**<br><br>☐ If NO, continue.<br><br>3. Does the finding represent actual loss of safety function of a single Train, for > its Tech Spec Allowed Outage Time?<br><br>☐ **If YES ➛ Stop. Go to Phase 2.**<br><br>☐ If NO, continue.<br><br>4. Does the finding represent an actual loss of safety function of one or more non-Tech Spec Trains of equipment designated as risk-significant per 10CFR50.65, for >24 hrs?<br><br>☐ **If YES ➛ Stop. Go to Phase 2.**<br><br>☐ If NO, continue.<br><br>5. Does the finding screen as potentially risk significant due to a seismic, flooding, or severe weather initiating event, using the criteria on page 5 of this Worksheet?<br><br>☐ **If YES** ➛ Use the IPEEE or other existing plant-specific analyses to identify core damage scenarios of concern and provide this input for **Phase 3** analysis.<br><br>☐ If NO, screen as Green. | 1. RCS Barrier (e.g.,pressurized thermal shock issues)<br><br>Stop. Go to Phase 3.<br><br>2. Fuel Barrier<br><br>Screen as Green. | 1. Does the finding only represent a degradation of the radiological barrier function provided for the control room, or auxiliary building, or spent fuel pool, or SBGT system (BWR)?<br><br>☐ **If YES** ➛ screen as Green.<br><br>☐ If NO, continue.<br><br>2. Does the finding represent a degradation of the barrier function of the control room against smoke or a toxic atmosphere?<br><br>☐ **If YES ➛ Stop. Go to Phase 3.**<br><br>☐ If NO, continue.<br><br>3. Does the finding represent an actual open pathway in the physical integrity of reactor containment, or involve an actual reduction in defense-in-depth for the atmospheric pressure control or hydrogen control functions of the reactor containment?<br><br>☐ **If YES ➛ Stop. Go to Appendix H of IMC 0609.**<br><br>☐ If NO, screen as Green. |

**SDP PHASE 1 SCREENING WORKSHEET FOR IE, MS, and B CORNERSTONES**

**Seismic, Flooding, and Severe Weather Screening Criteria**

1. Does the finding involve the loss or degradation of equipment or function specifically designed to mitigate a seismic, flooding, or severe weather initiating event (e.g., seismic snubbers, flooding barriers, tornado doors)?

   ☐ **If YES** ➛ continue to question 2
   ☐ If NO ➛ skip to question 3

2. If the equipment or safety function is assumed to be completely failed or unavailable, are ANY of the following three statements TRUE? The loss of this equipment or function by itself, during the external initiating event it was intended to mitigate

   a) would cause a plant trip or any of the Initiating Events used by Phase 2 for the plant in question;

   b) would degrade **two or more** Trains of a multi-train safety system or function;

   c) would degrade one or more Trains of a system that supports a safety system or function.

   ☐ **If YES** ➛ the finding is potentially risk significant due to external initiating event core damage sequences - return to page 4 of this Worksheet
   ☐ If NO, screen as Green

3. Does the finding involve the total loss of any safety function, identified by the licensee through a PRA, IPEEE, or similar analysis, that contributes to external event initiated core damage accident sequences (i.e., initiated by a seismic, flooding, or severe weather event)?

   ☐ **If YES** ➛ the finding is potentially risk significant due to external initiating event core damage sequences - return to page 4 of this Worksheet
   ☐ If NO, screen as Green

**Result of Phase 1 screening process:**

☐ **Screen as Green** ☒ **Go to Phase 2** ☐ **Go to Phase 3**

Important Assumptions:

Recovery of backwash function upon a loss of VI was not credited due to the lack of necessary procedures and equipment. (Note: necessary procedures, platforms, and tools have since been provided/stagged.)

Both Unit 1 and 2 "A" trains of RN will lose their suction source during seasonal Alewife high concentration periods (late July–early August) upon receipt of an SI, LOOP, or loss of instrument air (VI) because regular backwashing is necessary during this period to prevent strainer clogging. Operators would be unable to manually backwash the strainers to restore operability of the "A" trains. This would result in a loss of the "A" train of RN for both Unit 1 and Unit 2 if an SI, LOOP, or loss of VI occurred during the seasonal Alewife influx period. The "A" train can not be immediately aligned to the SNSWP because of air entrainment concerns that could cause the inoperability of the AFW system. The procedural process to align "A" train to the SNSWP takes between 30 minutes to an hour, and entails closing the TDAFW pump suction to "A" train RN.

Both Unit 1 and 2 "B" trains of RN will perform their intended safety function if aligned to the Standby Nuclear Service Water Pond (SNSWP) prior to significant fouling. For an SI or LOOP, the worst case initial condition would be strainer fouling on the "B" trains to the auto backwash setpoint (1.86 psid) from Lake Norman just prior to auto swap-over to the SNSWP after an SI or LOOP occurs. The assumption is that the "B" trains would provide adequate RN flow and cooling even with this initial condition of 1.86 psid worth of fouling. Thus, for all initiators in which an SI or

LOOP occurs, only the "A" train would be lost for each unit. For a loss of VI without a LOOP, the "B" trains do not automatically swap to the pond and would become fouled to greater than the 1.86 psid. The only operator action that would drive the operator to swap the train to the pond would be Loss of RN after the pumps were lost due to fouling or a step in the Loss of VI procedure that was in place to prevent RN pump runout. Transferring the suction source after loss of RN occurs, without the ability to backwash the strainers, would not restore RN system function. The step to transfer the "B" train to the SNSWP in the loss of VI procedure requires that all 4 RN pumps be running at the time the step is reached (uncertain if that will be the case 100% of the time) and the step would be reached no earlier than 1 hour after the loss of VI (and subsequent dual unit trips due to FRV closure) occurs which is unlikely to be fast enough to ensure the strainer won't be clogged prior to swapover.

The accompanying Phase 2 is for the case involving the loss of VI without a LOOP. The loss of VI initiating event frequency (for < 3 days) was applied to both the Loss of VI and Loss of RN sheets, since a loss of VI would result in a loss of RN. No cumulative risk additions were made due to additional initiators that would cause an SI or LOOP resulting in the loss of the "A" trains only for the affected Unit(s) and loss of multi-train functions, because of already obtaining the highest risk with the "Loss of VI without a LOOP" case. On a loss of VI without a LOOP, the "B" train of RN suction source of Lake Norman would not auto transfer to the pond like it does on an SI signal. A loss of VI is expected to cause a reactor trip on both units due to FRV closures to the S/G's causing a trip on low S/G level. Both units' RN trains could be lost since they will remain aligned to Lake Norman.

Charging/HHSI, Safety Injection, RHR/LHSI, and MDAFW pumps/motors are affected by a loss of RN because they are cooled by RN. At what point these pumps would be lost is speculative, but the licensee's PRA shows 15 minutes. The standby makeup pump would be available for seal cooling (26 gpm) to the secured RCPs following a Loss of VI. If an SI does not occur after a Loss of VI, then only the charging (NV) and AFW pumps would be needed.

Performed by: Ryan Eul _____ Date: __11/1/07___

xposteaso

Procedural guidance exists for operator action to prevent cooldown that would cause a safety injection after Loss of VI. In addition, guidance exists for manually controlling AFW flow to prevent overfill of the steam generators to prevent loss of TDAFW.

Cross connecting RN to the containment ventilation cooling water (RV) system would be unavailable because RV system strainers do not have backwash capability and those pumps would also be assumed to fail due to similar macro-fouling concerns.

Exposure time to Alewife season appears to be 3-30 days per year based on the span of high strainer D/P alarm data each year. However, the licensee has arbitrarily used a 5 alarms per day setpoint to count as a significant fouling concern; but has no calculations to support this number, just engineering judgment. By using the 5 alarms per day rule to count as “significant” macro-fouling, it reduces the exposure time, and the licensee believes that the longest exposure time for this deficiency was ~60 hours in one year. This is their preliminary stance; therefore, the “< 3 day” exposure time for Loss of VI was chosen for the Phase 2 worksheets. Even with this smaller exposure period, the worksheets still result in the highest risk potential category. Using the 3-30 day exposure time would increase the order of magnitude by a factor of 10.

The strainer baskets rotate when their associated pump is running. The inspectors do not feel that this rotation will cause the fish to be ground up and sucked through the strainer as the licensee may argue. The fish are 3-4” long and the strainer holes are 3/16” in diameter. If the grinding action worked by itself, there would be no reason to have the water backwash function to begin with in strainer design. In addition, the licensee has no analysis to dispute the possible detrimental effects of pieces of fish going to the RN pumps, heat exchangers, and cooled components.

NOTE FOR SRA: The inspectors are not sure if the Phase 2 SDP worksheet which outlines initiating event frequencies has the proper frequency for Loss of VI due to the addition 2 diesel VI compressors placed on site around the time NRC began using the SDP.

Because the B train(s) of RN will automatically swap from the Lake to the Pond during a SI or LOOP event, the Phase 2 addressed the worst case where all RN trains remain aligned to the Lake and vulnerable to the macro-fouling (i.e., loss of VI without a LOOP). The loss of VI initiating event frequency (for < 3 days) was applied to both the Loss of VI and Loss of RN sheets, since a loss of VI would result in a loss of RN. As both Units would be affected, the lack of credit to cross connect RN (in the loss of RN SDP worksheet) and the lack of credit for motor driven auxiliary feedwater pumps (in the loss of VI SDP worksheet) reflected a finding of high safety significance (Red) in the Phase 2 risk evaluation.

ATTACHMENT M - SYSTEM FLOW BALANCE GRAPH.

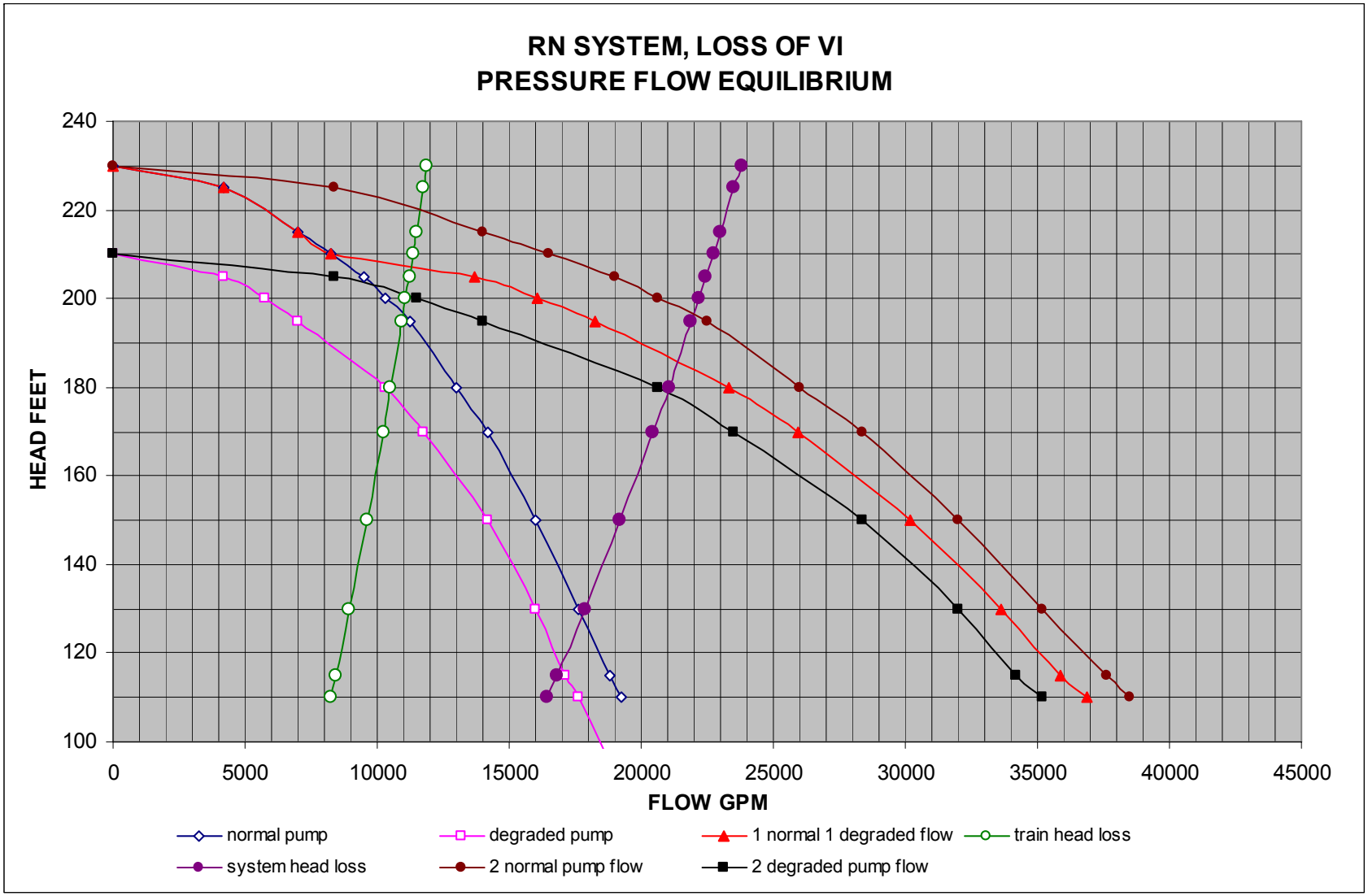

ATTACHMENT N - BACKWASH CYCLE GRAPH

Strainer backwash cycles derived from pressure signal Unit 1 and 2 strainers.
Normal is 1.5, .5, -.5, -1.5.
High is 2., 1., -1., -2.  Each x axis unit equals one day.

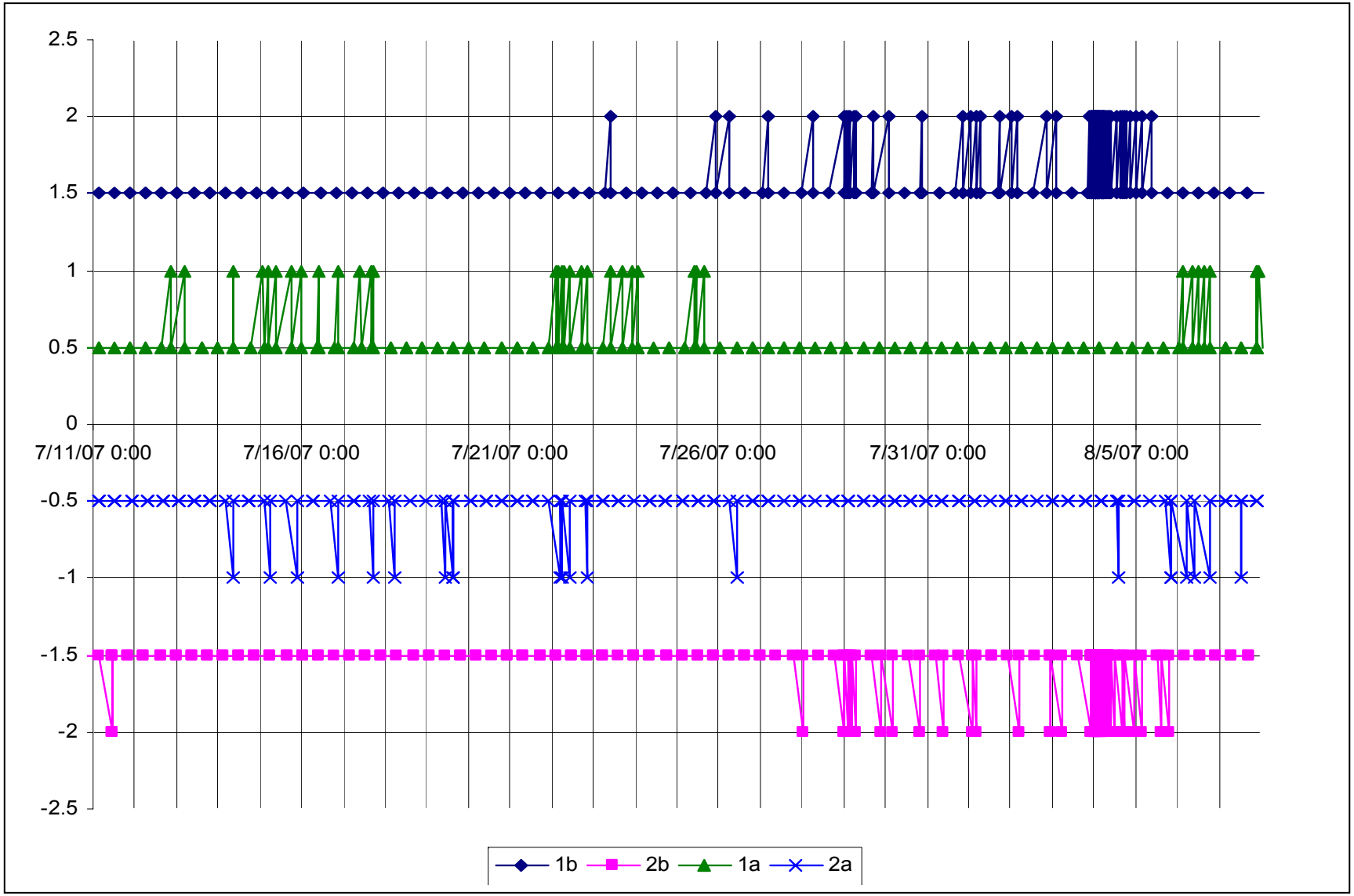

# ATTACHMENT O – SPAR RUN FOR LOIA WITH LOSS OF B TRAIN OF NSW

LOIA WITH LOSS OF B TRAIN OF NSW

Fam : MCGU_3P
User : IDAHO NATIONAL LABORATORY
Ev ID: LOIA-FISH-B-TRAIN-SW
Desc : Initiating Event Assessment

Code Ver : 7:27
Model Ver : 2008/01/31
Init Event: IE-LOIA
Total CCDP: 5.9E-004

BASIC EVENT CHANGES

| Event Name | Description | Base Prob | Curr Prob | Type |
|---|---|---|---|---|
| AFW-XHE-XM-AIR | OPERATOR FAILS TO THROTTLE A | 2.5E-001 | 2.0E-002 | |
| CVW-SYS-TM-RV | Containment ventilation cool | 1.0E-001 | 1.0E+000 | TRUE |
| IE-ISL-HPI | ISLOCA IE 2-CKV HPI interfac | 2.3E-006 | +0.0E+000 | |
| IE-ISL-LPI | ISLOCA IE 2-CKV LPI interfac | 4.6E-006 | +0.0E+000 | |
| IE-ISL-RHR | RHR pipe ruptures | 7.9E-006 | +0.0E+000 | |
| IE-LDCEVDD | Loss of DC Bus B Initiating | 1.2E-003 | +0.0E+000 | |
| IE-LLOCA | Large Loss of Coolant Accide | 2.5E-006 | +0.0E+000 | |
| IE-LOACA | Loss of vital ac Bus 1A init | 9.0E-003 | +0.0E+000 | |
| IE-LOCCW | Loss of Component Cooling Wa | 4.0E-004 | +0.0E+000 | |
| IE-LOCHS | LOSS OF CONDENSOR HEAT SIN | 8.0E-002 | +0.0E+000 | |
| IE-LOIA | LOSS OF INSTRUMENT AIR INITI | 1.0E-002 | 1.0E+000 | |
| IE-LOMFW | LOSS OF MAIN FEEDWATER | 1.0E-001 | +0.0E+000 | |
| IE-LONSR | Loss of Nuclear Service Wate | 4.0E-004 | +0.0E+000 | |
| IE-LOOP | LOSS OF OFFSITE POWER | +0.0E+000 | +0.0E+000 | |
| IE-MLOCA | MEDIUM LOCA | 2.0E-004 | +0.0E+000 | |
| IE-RXVRUPT | REACTOR VESSEL RUPTURE INIT | 1.0E-007 | +0.0E+000 | |
| IE-SGTR | STEAM GENERATOR TUBE RUPTU | 4.0E-003 | +0.0E+000 | |
| IE-SLB | STEAM LINE BREAK | 1.2E-002 | +0.0E+000 | |
| IE-SLOCA | SMALL LOCA | 6.0E-004 | +0.0E+000 | |
| IE-SORV | STUCK-OPEN PZR SAFETY VALVE | 3.0E-003 | +0.0E+000 | |
| IE-TRANS | TRANSIENT | 8.0E-001 | +0.0E+000 | |
| NSR-STR-CF-ALL | CCF OF ALL 4 NSR STRAINERS | +0.0E+000 | 4.0E-006 | |
| NSR-STR-CF-UN1 | CCF OF ALL UNIT 1 NSR STRAIN | +0.0E+000 | 1.7E-005 | |
| NSR-STR-PG-1B | FAILURE OF NSR MDP-1B STRAIN | 1.7E-004 | 1.0E+000 | TRUE |
| NSR-STR-PG-2B | FAILURE OF NSR MDP-2B STRAIN | 1.7E-004 | 1.0E+000 | TRUE |
| NSR-XHE-XL-NSRSYS | FAILURE TO RECOVER FROM A LO | 4.0E-002 | 1.0E+000 | TRUE |

SEQUENCE PROBABILITIES
Truncation : Cummulative : 100.0% Individual : 0.0%

| Event Tree Name | Sequence Name | CCDP | %Cont |
|---|---|---|---|
| LOIA | 11 | 3.0E-004 | |
| LOIA | 10 | 2.9E-004 | |
| LOIA | 02-02-13 | 2.3E-006 | |
| LOIA | 12-14 | 1.5E-007 | |
| LOIA | 02-03-13 | 1.2E-007 | |

2008/03/17 15:53:28 page 1

# ATTACHMENT O – SPAR RUN FOR LOIA WITH LOSS OF B TRAIN OF NSW

```
          SEQUENCE LOGIC
Event Tree     Sequence Name                        Logic
-------------- ------------- ---------------------------------------------------
LOIA           11            /RPS                        AFW
                              REC-IAS                    FAB

LOIA           10            /RPS                        AFW
                              REC-IAS                   /FAB
                              HPR
LOIA           02-02-13      /RPS                       /AFW
                             /PORV                       LOSC
                             /RCPT                      /RSD
                             /BP1                        BP2
                             /FW-LOCA                    HPI
                              SSC1
LOIA           12-14          RPS                       /RCSPRESS
                              MFW                       /AFW-A
                              BORATION
LOIA           02-03-13      /RPS                       /AFW
                             /PORV                       LOSC
                             /RCPT                      /RSD
                              BP1                       /BP2
                             /FW-LOCA                    HPI
                              SSC1

 Fault Tree Name          Description
------------------------- ---------------------------------------------------
 AFW                      AUXILIARY FEEDWATER
 AFW-A                    AUXILIARY FEEDWATER
 BORATION                 EMERGENCY BORATION
 BP1                      RCP SEAL STAGE 1 INTEGRITY
 BP2                      RCP SEAL STAGE 2 INTEGRITY
 FAB                      FEED AND BLEED
 FW-LOCA                  FEEDWATER AVAILABLE MFW or AFW USING NLOCA-FTF
 HPI                      HIGH PRESSURE INJECTION
 HPR                      HPR PRESSURE RECIRCULATION
 LOSC                     LOSS OF SEAL COOLING
 MFW                      MAIN FEEDWATER
 PORV                     PORV/SRVs ARE CLOSED
 RCPT                     REACTOR COOLANT PUMPS TRIPPED
 RCSPRESS                 RCS PRESSURE LIMITED
 REC-IAS                  INSTRUMENT AIR SYSTEM RECOVERED
 RPS                      REACTOR TRIP
 RSD                      RAPID SECONDARY DEPRESS
 SSC1                     RAPID SECONDARY DEPRESS


     2008/03/17                    15:53:28                      page     2
```

```
         SEQUENCE CUT SETS
             Truncation:  Cummulative: 100.0%  Individual:   1.0%

     Event Tree: LOIA                                    CCDP:  3.0E-004
     Sequence:   11

  CCDP       % Cut Set                       Cut Set Events
---------    ---------    ---------------------------------------------------
 6.0E-005        20.26     AFW-XHE-XM-AIR            CVC-MDP-RUNA
                           NSR-MDP-RUNB              NSR-MDP-TM-1A
 6.0E-005        20.26     AFW-XHE-XM-AIR            CVC-MDP-RUNB
                           NSR-MDP-RUNB              NSR-MDP-TM-1A
 2.1E-005         7.09     AFW-TDP-FS-TDP            CVC-MDP-RUNA
                           NSR-MDP-RUNB              NSR-MDP-TM-1A
 2.1E-005         7.09     AFW-TDP-FS-TDP            CVC-MDP-RUNB
                           NSR-MDP-RUNB              NSR-MDP-TM-1A
 1.5E-005         5.07     AFW-TDP-TM-TDP            CVC-MDP-RUNB
                           NSR-MDP-RUNB              NSR-MDP-TM-1A
 1.5E-005         5.07     AFW-TDP-TM-TDP            CVC-MDP-RUNA
                           NSR-MDP-RUNB              NSR-MDP-TM-1A
 1.2E-005         4.16     AFW-TDP-FR-TDP            CVC-MDP-RUNA
                           NSR-MDP-RUNB              NSR-MDP-TM-1A
 1.2E-005         4.16     AFW-TDP-FR-TDP            CVC-MDP-RUNB
                           NSR-MDP-RUNB              NSR-MDP-TM-1A
 1.0E-005         3.38     AFW-XHE-XM-AIR            NSR-MDP-FS-1A
                           CVC-MDP-RUNB              NSR-MDP-RUNB
 1.0E-005         3.38     AFW-XHE-XM-AIR            NSR-MDP-FS-1A
                           CVC-MDP-RUNA              NSR-MDP-RUNB
 5.0E-006         1.69     AFW-XHE-XM-AIR            CVC-MDP-RUNB
                           NSR-MDP-RUNB              NSR-XHE-XR-MDP1A
 5.0E-006         1.69     AFW-XHE-XM-AIR            CVC-MDP-RUNA
                           NSR-MDP-RUNB              NSR-XHE-XR-MDP1A
 3.5E-006         1.18     AFW-TDP-FS-TDP            NSR-MDP-FS-1A
                           CVC-MDP-RUNB              NSR-MDP-RUNB
 3.5E-006         1.18     AFW-TDP-FS-TDP            NSR-MDP-FS-1A
                           CVC-MDP-RUNA              NSR-MDP-RUNB

     Event Tree: LOIA                                    CCDP:  2.9E-004
     Sequence:   10

  CCDP       % Cut Set                       Cut Set Events
---------    ---------    ---------------------------------------------------
 1.2E-004        41.81     AFW-XHE-XM-AIR            NSR-MDP-RUNB
                           NSR-MDP-TM-1A
 4.2E-005        14.63     AFW-TDP-FS-TDP            NSR-MDP-RUNB
                           NSR-MDP-TM-1A
 3.0E-005        10.45     AFW-TDP-TM-TDP            NSR-MDP-RUNB
                           NSR-MDP-TM-1A
 2.5E-005         8.57     AFW-TDP-FR-TDP            NSR-MDP-RUNB

    2008/03/17                    15:53:28                       page     3
```

| | | | |
|---|---|---|---|
| | | NSR-MDP-TM-1A | |
| 2.0E-005 | 6.97 | AFW-XHE-XM-AIR | NSR-MDP-FS-1A |
| | | NSR-MDP-RUNB | |
| 1.0E-005 | 3.48 | AFW-XHE-XM-AIR | NSR-MDP-RUNB |
| | | NSR-XHE-XR-MDP1A | |
| 7.0E-006 | 2.44 | AFW-TDP-FS-TDP | NSR-MDP-FS-1A |
| | | NSR-MDP-RUNB | |
| 5.0E-006 | 1.74 | AFW-TDP-TM-TDP | NSR-MDP-FS-1A |
| | | NSR-MDP-RUNB | |
| 4.1E-006 | 1.43 | AFW-TDP-FR-TDP | NSR-MDP-FS-1A |
| | | NSR-MDP-RUNB | |
| 3.5E-006 | 1.22 | AFW-TDP-FS-TDP | NSR-MDP-RUNB |
| | | NSR-XHE-XR-MDP1A | |

Event Tree: LOIA CCDP: 2.3E-006
Sequence: 02-02-13

| CCDP | % Cut Set | Cut Set Events | |
|---|---|---|---|
| 1.8E-007 | 7.76 | RCS-MDP-LK-BP2 | SSF-PDP-TM-SYS |
| | | CVC-MDP-RUNB | NSR-MDP-RUNB |
| | | NSR-MDP-TM-1A | NSR-XHE-XL-NSRSYSL |
| 1.8E-007 | 7.76 | RCS-MDP-LK-BP2 | SSF-PDP-TM-SYS |
| | | CVC-MDP-RUNA | NSR-MDP-RUNB |
| | | NSR-MDP-TM-1A | NSR-XHE-XL-NSRSYSL |
| 1.8E-007 | 7.76 | RCS-MDP-LK-BP2 | SSF-PDP-FS-SYS |
| | | CVC-MDP-RUNA | NSR-MDP-RUNB |
| | | NSR-MDP-TM-1A | NSR-XHE-XL-NSRSYSL |
| 1.8E-007 | 7.76 | RCS-MDP-LK-BP2 | SSF-PDP-FS-SYS |
| | | CVC-MDP-RUNB | NSR-MDP-RUNB |
| | | NSR-MDP-TM-1A | NSR-XHE-XL-NSRSYSL |
| 1.6E-007 | 6.70 | RCS-MDP-LK-BP2 | SSF-ACX-FR-SSF2 |
| | | CVC-MDP-RUNA | NSR-MDP-RUNB |
| | | NSR-MDP-TM-1A | NSR-XHE-XL-NSRSYSL |
| 1.6E-007 | 6.70 | RCS-MDP-LK-BP2 | SSF-ACX-FR-SSF2 |
| | | CVC-MDP-RUNB | NSR-MDP-RUNB |
| | | NSR-MDP-TM-1A | NSR-XHE-XL-NSRSYSL |
| 6.0E-008 | 2.59 | RCS-MDP-LK-BP2 | SSF-MOV-CC-849AC |
| | | CVC-MDP-RUNB | NSR-MDP-RUNB |
| | | NSR-MDP-TM-1A | NSR-XHE-XL-NSRSYSL |
| 6.0E-008 | 2.59 | RCS-MDP-LK-BP2 | SSF-MOV-CC-1013C |
| | | CVC-MDP-RUNB | NSR-MDP-RUNB |
| | | NSR-MDP-TM-1A | NSR-XHE-XL-NSRSYSL |
| 6.0E-008 | 2.59 | RCS-MDP-LK-BP2 | SSF-XHE-XR-SYS |
| | | CVC-MDP-RUNB | NSR-MDP-RUNB |
| | | NSR-MDP-TM-1A | NSR-XHE-XL-NSRSYSL |
| 6.0E-008 | 2.59 | RCS-MDP-LK-BP2 | SSF-MOV-CC-842AC |
| | | CVC-MDP-RUNB | NSR-MDP-RUNB |
| | | NSR-MDP-TM-1A | NSR-XHE-XL-NSRSYSL |
| 6.0E-008 | 2.59 | RCS-MDP-LK-BP2 | SSF-XHE-XR-SYS |
| | | CVC-MDP-RUNA | NSR-MDP-RUNB |
| | | NSR-MDP-TM-1A | NSR-XHE-XL-NSRSYSL |

2008/03/17 15:53:28 page 4

| | | | |
|---|---|---|---|
| 6.0E-008 | 2.59 | RCS-MDP-LK-BP2 | SSF-MOV-CC-842AC |
| | | CVC-MDP-RUNA | NSR-MDP-RUNB |
| | | NSR-MDP-TM-1A | NSR-XHE-XL-NSRSYSL |
| 6.0E-008 | 2.59 | RCS-MDP-LK-BP2 | SSF-MOV-CC-849AC |
| | | CVC-MDP-RUNA | NSR-MDP-RUNB |
| | | NSR-MDP-TM-1A | NSR-XHE-XL-NSRSYSL |
| 6.0E-008 | 2.59 | RCS-MDP-LK-BP2 | SSF-MOV-CC-1013C |
| | | CVC-MDP-RUNA | NSR-MDP-RUNB |
| | | NSR-MDP-TM-1A | NSR-XHE-XL-NSRSYSL |
| 5.9E-008 | 2.52 | RCS-MDP-LK-BP2 | SSF-PDP-FR-SYS |
| | | CVC-MDP-RUNB | NSR-MDP-RUNB |
| | | NSR-MDP-TM-1A | NSR-XHE-XL-NSRSYSL |
| 5.9E-008 | 2.52 | RCS-MDP-LK-BP2 | SSF-PDP-FR-SYS |
| | | CVC-MDP-RUNA | NSR-MDP-RUNB |
| | | NSR-MDP-TM-1A | NSR-XHE-XL-NSRSYSL |
| 4.8E-008 | 2.07 | RCS-MDP-LK-BP2 | SSF-ACX-FS-SSF2 |
| | | CVC-MDP-RUNB | NSR-MDP-RUNB |
| | | NSR-MDP-TM-1A | NSR-XHE-XL-NSRSYSL |
| 4.8E-008 | 2.07 | RCS-MDP-LK-BP2 | SSF-ACX-FS-SSF2 |
| | | CVC-MDP-RUNA | NSR-MDP-RUNB |
| | | NSR-MDP-TM-1A | NSR-XHE-XL-NSRSYSL |
| 3.0E-008 | 1.29 | RCS-MDP-LK-BP2 | SSF-PDP-FS-SYS |
| | | NSR-MDP-FS-1A | CVC-MDP-RUNB |
| | | NSR-MDP-RUNB | NSR-XHE-XL-NSRSYSL |
| 3.0E-008 | 1.29 | RCS-MDP-LK-BP2 | SSF-PDP-FS-SYS |
| | | NSR-MDP-FS-1A | CVC-MDP-RUNA |
| | | NSR-MDP-RUNB | NSR-XHE-XL-NSRSYSL |
| 3.0E-008 | 1.29 | RCS-MDP-LK-BP2 | SSF-PDP-TM-SYS |
| | | NSR-MDP-FS-1A | CVC-MDP-RUNB |
| | | NSR-MDP-RUNB | NSR-XHE-XL-NSRSYSL |
| 3.0E-008 | 1.29 | RCS-MDP-LK-BP2 | SSF-PDP-TM-SYS |
| | | NSR-MDP-FS-1A | CVC-MDP-RUNA |
| | | NSR-MDP-RUNB | NSR-XHE-XL-NSRSYSL |
| 2.6E-008 | 1.12 | RCS-MDP-LK-BP2 | SSF-ACX-FR-SSF2 |
| | | NSR-MDP-FS-1A | CVC-MDP-RUNA |
| | | NSR-MDP-RUNB | NSR-XHE-XL-NSRSYSL |
| 2.6E-008 | 1.12 | RCS-MDP-LK-BP2 | SSF-ACX-FR-SSF2 |
| | | NSR-MDP-FS-1A | CVC-MDP-RUNB |
| | | NSR-MDP-RUNB | NSR-XHE-XL-NSRSYSL |

Event Tree: LOIA CCDP: 1.5E-007
Sequence: 12-14

| CCDP | % Cut Set | Cut Set Events | |
|---|---|---|---|
| 3.2E-008 | 21.28 | CVC-XHE-XM-BOR | RPS-BME-CF-RTBAB |
| 2.7E-008 | 17.75 | CVC-XHE-XM-BOR | RPS-TXX-CF-6OF8 |
| | | /RPS-CCP-TM-CHA | RPS-XHE-XE-NSGNL |
| 2.4E-008 | 15.99 | CVC-XHE-XM-BOR | RPS-ROD-CF-RCCAS |
| 1.8E-008 | 12.03 | CVC-XHE-XM-BOR | /RPS-CCP-TM-CHA |
| | | RPS-CCX-CF-6OF8 | RPS-XHE-XE-NSGNL |
| 4.8E-009 | 3.19 | RPS-BME-CF-RTBAB | CVC-MDP-RUNB |

2008/03/17 15:53:28 page 5

```
                                NSR-MDP-RUNB              NSR-MDP-TM-1A
  4.8E-009         3.19         RPS-BME-CF-RTBAB          CVC-MDP-RUNA
                                NSR-MDP-RUNB              NSR-MDP-TM-1A
  4.0E-009         2.66         RPS-TXX-CF-6OF8          /RPS-CCP-TM-CHA
                                RPS-XHE-XE-NSGNL          CVC-MDP-RUNB
                                NSR-MDP-RUNB              NSR-MDP-TM-1A
  4.0E-009         2.66         RPS-TXX-CF-6OF8          /RPS-CCP-TM-CHA
                                RPS-XHE-XE-NSGNL          CVC-MDP-RUNA
                                NSR-MDP-RUNB              NSR-MDP-TM-1A
  3.6E-009         2.40         RPS-ROD-CF-RCCAS          CVC-MDP-RUNB
                                NSR-MDP-RUNB              NSR-MDP-TM-1A
  3.6E-009         2.40         RPS-ROD-CF-RCCAS          CVC-MDP-RUNA
                                NSR-MDP-RUNB              NSR-MDP-TM-1A
  2.7E-009         1.81        /RPS-CCP-TM-CHA            RPS-CCX-CF-6OF8
                                RPS-XHE-XE-NSGNL          CVC-MDP-RUNA
                                NSR-MDP-RUNB              NSR-MDP-TM-1A
  2.7E-009         1.81        /RPS-CCP-TM-CHA            RPS-CCX-CF-6OF8
                                RPS-XHE-XE-NSGNL          CVC-MDP-RUNB
                                NSR-MDP-RUNB              NSR-MDP-TM-1A
  2.1E-009         1.37         CVC-XHE-XM-BOR            RPS-UVL-CF-UVDAB
                                RPS-XHE-XE-SIGNL
  1.6E-009         1.06         RPS-BME-CF-RTBAB          HPR-MOV-CC-58A

      Event Tree: LOIA                                        CCDP:  1.2E-007
      Sequence:   02-03-13

   CCDP       % Cut Set                       Cut Set Events
---------    ---------    ---------------------------------------------------
  9.0E-009         7.76         RCS-MDP-LK-BP1           /RCS-MDP-LK-BP2
                                SSF-PDP-TM-SYS            CVC-MDP-RUNB
                                NSR-MDP-RUNB              NSR-MDP-TM-1A
                                NSR-XHE-XL-NSRSYSL
  9.0E-009         7.76         RCS-MDP-LK-BP1           /RCS-MDP-LK-BP2
                                SSF-PDP-TM-SYS            CVC-MDP-RUNA
                                NSR-MDP-RUNB              NSR-MDP-TM-1A
                                NSR-XHE-XL-NSRSYSL
  9.0E-009         7.76         RCS-MDP-LK-BP1           /RCS-MDP-LK-BP2
                                SSF-PDP-FS-SYS            CVC-MDP-RUNA
                                NSR-MDP-RUNB              NSR-MDP-TM-1A
                                NSR-XHE-XL-NSRSYSL
  9.0E-009         7.76         RCS-MDP-LK-BP1           /RCS-MDP-LK-BP2
                                SSF-PDP-FS-SYS            CVC-MDP-RUNB
                                NSR-MDP-RUNB              NSR-MDP-TM-1A
                                NSR-XHE-XL-NSRSYSL
  7.8E-009         6.70         RCS-MDP-LK-BP1           /RCS-MDP-LK-BP2
                                SSF-ACX-FR-SSF2           CVC-MDP-RUNA
                                NSR-MDP-RUNB              NSR-MDP-TM-1A
                                NSR-XHE-XL-NSRSYSL
  7.8E-009         6.70         RCS-MDP-LK-BP1           /RCS-MDP-LK-BP2
                                SSF-ACX-FR-SSF2           CVC-MDP-RUNB
                                NSR-MDP-RUNB              NSR-MDP-TM-1A
                                NSR-XHE-XL-NSRSYSL

     2008/03/17                    15:53:28                       page     6
```

```
3.0E-009        2.59    RCS-MDP-LK-BP1          /RCS-MDP-LK-BP2
                        SSF-MOV-CC-849AC         CVC-MDP-RUNB
                        NSR-MDP-RUNB             NSR-MDP-TM-1A
                        NSR-XHE-XL-NSRSYSL
3.0E-009        2.59    RCS-MDP-LK-BP1          /RCS-MDP-LK-BP2
                        SSF-MOV-CC-1013C         CVC-MDP-RUNB
                        NSR-MDP-RUNB             NSR-MDP-TM-1A
                        NSR-XHE-XL-NSRSYSL
3.0E-009        2.59    RCS-MDP-LK-BP1          /RCS-MDP-LK-BP2
                        SSF-XHE-XR-SYS           CVC-MDP-RUNB
                        NSR-MDP-RUNB             NSR-MDP-TM-1A
                        NSR-XHE-XL-NSRSYSL
3.0E-009        2.59    RCS-MDP-LK-BP1          /RCS-MDP-LK-BP2
                        SSF-MOV-CC-842AC         CVC-MDP-RUNB
                        NSR-MDP-RUNB             NSR-MDP-TM-1A
                        NSR-XHE-XL-NSRSYSL
3.0E-009        2.59    RCS-MDP-LK-BP1          /RCS-MDP-LK-BP2
                        SSF-XHE-XR-SYS           CVC-MDP-RUNA
                        NSR-MDP-RUNB             NSR-MDP-TM-1A
                        NSR-XHE-XL-NSRSYSL
3.0E-009        2.59    RCS-MDP-LK-BP1          /RCS-MDP-LK-BP2
                        SSF-MOV-CC-842AC         CVC-MDP-RUNA
                        NSR-MDP-RUNB             NSR-MDP-TM-1A
                        NSR-XHE-XL-NSRSYSL
3.0E-009        2.59    RCS-MDP-LK-BP1          /RCS-MDP-LK-BP2
                        SSF-MOV-CC-849AC         CVC-MDP-RUNA
                        NSR-MDP-RUNB             NSR-MDP-TM-1A
                        NSR-XHE-XL-NSRSYSL
3.0E-009        2.59    RCS-MDP-LK-BP1          /RCS-MDP-LK-BP2
                        SSF-MOV-CC-1013C         CVC-MDP-RUNA
                        NSR-MDP-RUNB             NSR-MDP-TM-1A
                        NSR-XHE-XL-NSRSYSL
2.9E-009        2.52    RCS-MDP-LK-BP1          /RCS-MDP-LK-BP2
                        SSF-PDP-FR-SYS           CVC-MDP-RUNB
                        NSR-MDP-RUNB             NSR-MDP-TM-1A
                        NSR-XHE-XL-NSRSYSL
2.9E-009        2.52    RCS-MDP-LK-BP1          /RCS-MDP-LK-BP2
                        SSF-PDP-FR-SYS           CVC-MDP-RUNA
                        NSR-MDP-RUNB             NSR-MDP-TM-1A
                        NSR-XHE-XL-NSRSYSL
2.4E-009        2.07    RCS-MDP-LK-BP1          /RCS-MDP-LK-BP2
                        SSF-ACX-FS-SSF2          CVC-MDP-RUNB
                        NSR-MDP-RUNB             NSR-MDP-TM-1A
                        NSR-XHE-XL-NSRSYSL
2.4E-009        2.07    RCS-MDP-LK-BP1          /RCS-MDP-LK-BP2
                        SSF-ACX-FS-SSF2          CVC-MDP-RUNA
                        NSR-MDP-RUNB             NSR-MDP-TM-1A
                        NSR-XHE-XL-NSRSYSL
1.5E-009        1.29    RCS-MDP-LK-BP1          /RCS-MDP-LK-BP2
                        SSF-PDP-FS-SYS           NSR-MDP-FS-1A
                        CVC-MDP-RUNB             NSR-MDP-RUNB
                        NSR-XHE-XL-NSRSYSL

   2008/03/17                   15:53:28                      page     7
```

```
  1.5E-009         1.29     RCS-MDP-LK-BP1           /RCS-MDP-LK-BP2
                            SSF-PDP-FS-SYS            NSR-MDP-FS-1A
                            CVC-MDP-RUNA              NSR-MDP-RUNB
                            NSR-XHE-XL-NSRSYSL
  1.5E-009         1.29     RCS-MDP-LK-BP1           /RCS-MDP-LK-BP2
                            SSF-PDP-TM-SYS            NSR-MDP-FS-1A
                            CVC-MDP-RUNB              NSR-MDP-RUNB
                            NSR-XHE-XL-NSRSYSL
  1.5E-009         1.29     RCS-MDP-LK-BP1           /RCS-MDP-LK-BP2
                            SSF-PDP-TM-SYS            NSR-MDP-FS-1A
                            CVC-MDP-RUNA              NSR-MDP-RUNB
                            NSR-XHE-XL-NSRSYSL
  1.3E-009         1.12     RCS-MDP-LK-BP1           /RCS-MDP-LK-BP2
                            SSF-ACX-FR-SSF2           NSR-MDP-FS-1A
                            CVC-MDP-RUNB              NSR-MDP-RUNB
                            NSR-XHE-XL-NSRSYSL
  1.3E-009         1.12     RCS-MDP-LK-BP1           /RCS-MDP-LK-BP2
                            SSF-ACX-FR-SSF2           NSR-MDP-FS-1A
                            CVC-MDP-RUNA              NSR-MDP-RUNB
                            NSR-XHE-XL-NSRSYSL
```

BASIC EVENTS (Cut Sets Only)

| Event Name | Description | Curr Prob |
|---|---|---|
| AFW-TDP-FR-TDP | AFW TURBINE DRIVEN PUMP FAILS TO RUN | 4.1E-003 |
| AFW-TDP-FS-TDP | AFW TURBINE DRIVEN PUMP FAILS TO START | 7.0E-003 |
| AFW-TDP-TM-TDP | AFW TDP UNAVAILABLE DUE TO TEST AND MAINTENAN | 5.0E-003 |
| AFW-XHE-XM-AIR | OPERATOR FAILS TO THROTTLE AND CONTROL TDP - | 2.0E-002 |
| CVC-MDP-RUNA | FRACTION OF TIME CVC MDP TRAIN A IS RUNNING | 5.0E-001 |
| CVC-MDP-RUNB | FRACTION OF TIME CVC MDP TRAIN B IS RUNNING | 5.0E-001 |
| CVC-XHE-XM-BOR | OPERATOR FAILS TO INITIATE EMERGENCY BORATION | 2.0E-002 |
| HPR-MOV-CC-58A | RHR DISCHARGE MOV 58A FAILS TO OPEN | 1.0E-003 |
| NSR-MDP-FS-1A | NSR MDP-1A FAILS TO START | 2.0E-003 |
| NSR-MDP-RUNB | FRACTION OF TIME NSR MDP TRAIN B IS RUNNING | 5.0E-001 |
| NSR-MDP-TM-1A | NSR MDP-1A UNAVAILABLE DUE TO T & M | 1.2E-002 |
| NSR-XHE-XL-NSRSYSL | FAILURE TO RECOVER NSR (RN) VIA X-TIE TO U2 F | 1.0E-001 |
| NSR-XHE-XR-MDP1A | OPERATOR FAILS TO RESTORE NSR MDP-1A AFTER T | 1.0E-003 |
| RCS-MDP-LK-BP1 | RCP SEAL STAGE 1 INTEGRITY (BINDING/POPPI NG | 1.3E-002 |
| RCS-MDP-LK-BP2 | RCP SEAL STAGE 2 INTEGRITY (BINDING/POPPI NG | 2.0E-001 |
| RPS-BME-CF-RTBAB | CCF OF RTB-A AND RTB-B (MECHANICAL) | 1.6E-006 |
| RPS-CCP-TM-CHA | CH-A IN T&M | 5.0E-003 |
| RPS-CCX-CF-6OF8 | CCF 6 ANALOG PROCESS LOGIC MODULES IN 3 OF 4 | 1.8E-006 |
| RPS-ROD-CF-RCCAS | CCF 10 OR MORE RCCAS FAIL TO DROP | 1.2E-006 |
| RPS-TXX-CF-6OF8 | CCF 6 BISTABLES IN 3 OF 4 CHANNELS | 2.7E-006 |
| RPS-UVL-CF-UVDAB | CCF UV DRIVERS TRAINS A AND B (2 0F 2) | 1.0E-005 |
| RPS-XHE-XE-NSGNL | OPERATOR FAILS TO RESPOND WITH NO RPS SIGNAL | 5.0E-001 |
| RPS-XHE-XE-SIGNL | OPERATOR FAILS TO RESPOND WITH RPS SIGNAL PRE | 1.0E-002 |
| SSF-ACX-FR-SSF2 | FAILURE OF SSF AHU FAN #2 TO RUN | 2.6E-003 |
| SSF-ACX-FS-SSF2 | FAILURE OF SSF AHU FAN #2 TO START | 8.0E-004 |
| SSF-MOV-CC-1013C | FAILURE OF SSF MAKE-UP PDP TRAIN DISCH MOV 10 | 1.0E-003 |

2008/03/17 15:53:28 page 8

| Event Name | Description | Curr Prob |
|---|---|---|
| SSF-MOV-CC-842AC | FAILURE OF SSF MAKE-UP PDP TRAIN SUCTION MOV | 1.0E-003 |
| SSF-MOV-CC-849AC | FAILURE OF SSF MAKE-UP PDP TRAIN DISCH MOV 84 | 1.0E-003 |
| SSF-PDP-FR-SYS | FAILURE OF SSF MAKE-UP PDP TRAIN TO RUN | 9.8E-004 |
| SSF-PDP-FS-SYS | FAILURE OF SSF MAKE-UP PDP TRAIN TO START | 3.0E-003 |
| SSF-PDP-TM-SYS | SSF PDP SYSTEM UNAVAILABLE DUE TO TEST AND MA | 3.0E-003 |
| SSF-XHE-XR-SYS | OPERATOR FAILS TO RESTORE SSF PDP AFTER T & M | 1.0E-003 |

2008/03/17 15:53:28 page 9

ATTACHMENT P - SLICE REPORTS TO ADJUST FOR MAINTENANCE CUTSETS WITH TRAIN ON SERVICE INTERVALS

| Cut No. | % Total | % Cut Set | Prob./Frequency | Cut Sets |
|---|---|---|---|---|
| 1 | 20.49 | 20.49 | 1.200E-004 | IE->IE-LOIA, AFW-XHE-XM-AIR, NSR-MDP-RUNB, NSR-MDP-TM-1A |
| 2 | 30.73 | 10.24 | 6.000E-005 | IE->IE-LOIA, AFW-XHE-XM-AIR, CVC-MDP-RUNA, NSR-MDP-RUNB, NSR-MDP-TM-1A |
| 3 | 40.97 | 10.24 | 6.000E-005 | IE->IE-LOIA, AFW-XHE-XM-AIR, CVC-MDP-RUNB, NSR-MDP-RUNB, NSR-MDP-TM-1A |
| 4 | 48.14 | 7.17 | 4.200E-005 | IE->IE-LOIA, AFW-TDP-FS-TDP, NSR-MDP-RUNB, NSR-MDP-TM-1A |
| 5 | 53.26 | 5.12 | 3.000E-005 | IE->IE-LOIA, AFW-TDP-TM-TDP, NSR-MDP-RUNB, NSR-MDP-TM-1A |
| 6 | 57.46 | 4.20 | 2.461E-005 | IE->IE-LOIA, AFW-TDP-FR-TDP, NSR-MDP-RUNB, NSR-MDP-TM-1A |
| 7 | 61.04 | 3.58 | 2.100E-005 | IE->IE-LOIA, AFW-TDP-FS-TDP, CVC-MDP-RUNA, NSR-MDP-RUNB, NSR-MDP-TM-1A |
| 8 | 64.62 | 3.58 | 2.100E-005 | IE->IE-LOIA, AFW-TDP-FS-TDP, CVC-MDP-RUNB, NSR-MDP-RUNB, NSR-MDP-TM-1A |
| 9 | 67.18 | 2.56 | 1.500E-005 | IE->IE-LOIA, AFW-TDP-TM-TDP, CVC-MDP-RUNA, NSR-MDP-RUNB, NSR-MDP-TM-1A |
| 10 | 69.74 | 2.56 | 1.500E-005 | IE->IE-LOIA, AFW-TDP-TM-TDP, CVC-MDP-RUNB, NSR-MDP-RUNB, NSR-MDP-TM-1A |
| 11 | 71.84 | 2.10 | 1.230E-005 | IE->IE-LOIA, AFW-TDP-FR-TDP, CVC-MDP-RUNA, NSR-MDP-RUNB, NSR-MDP-TM-1A |
| 12 | 73.94 | 2.10 | 1.230E-005 | IE->IE-LOIA, AFW-TDP-FR-TDP, CVC-MDP-RUNB, NSR-MDP-RUNB, NSR-MDP-TM-1A |
| 13 | 74.35 | 0.41 | 2.400E-006 | IE->IE-LOIA, AFW-XHE-XM-AIR, HPI-XHE-XM-FB, NSR-MDP-RUNB, NSR-MDP-TM-1A |
| 14 | 74.55 | 0.20 | 1.200E-006 | IE->IE-LOIA, AFW-XHE-XM-AIR, IAS-XHE-XM-ALIGN, NSR-MDP-RUNB, NSR-MDP-TM-1A |
| 15 | 74.69 | 0.14 | 8.400E-007 | IE->IE-LOIA, AFW-TDP-FS-TDP, HPI-XHE-XM-FB, NSR-MDP-RUNB, NSR-MDP-TM-1A |
| 16 | 74.79 | 0.10 | 6.000E-007 | IE->IE-LOIA, AFW-TDP-TM-TDP, HPI-XHE-XM-FB, NSR-MDP-RUNB, NSR-MDP-TM-1A |
| 17 | 74.87 | 0.08 | 4.922E-007 | IE->IE-LOIA, AFW-TDP-FR-TDP, HPI-XHE-XM-FB, NSR-MDP-RUNB, NSR-MDP-TM-1A |
| 18 | 74.94 | 0.07 | 4.200E-007 | IE->IE-LOIA, AFW-TDP-FS-TDP, IAS-XHE-XM-ALIGN, NSR-MDP-RUNB, NSR-MDP-TM-1A |
| 19 | 74.99 | 0.05 | 3.000E-007 | IE->IE-LOIA, AFW-TDP-TM-TDP, IAS-XHE-XM-ALIGN, NSR-MDP-RUNB, NSR-MDP-TM-1A |
| 20 | 75.03 | 0.04 | 2.592E-007 | IE->IE-LOIA, AFW-AOV-CF-STM, NSR-MDP-RUNB, NSR-MDP-TM-1A |
| 21 | 75.07 | 0.04 | 2.461E-007 | IE->IE-LOIA, AFW-TDP-FR-TDP, IAS-XHE-XM-ALIGN, NSR-MDP-RUNB, NSR-MDP-TM-1A |
| | | | | |
| | | | | |
| | | | | SLICE SELECTION CRITERIA ->AND |
| | | | | ---------- |
| | | | | NSR-MDP-RUNB, NSR-MDP-TM-1A |