MORRISON KNUDSEN CORPORATION

EXECUTIVE OFFICE
MORRISON-KNUDSEN PLAZA
P.O. BOX 73/BOISE, IDAHO U.S.A. 83707
PHONE: (208) 386-8000

Carl Bertinger

15 September 1989

S/N 10CFR21-89-4
Ref. 10CFR21-0050

Mr. Thomas Murley, Director
Office of Nuclear Reactor Regulation
11555 Rockwell Pike
Rockwell, Maryland 20852

Subject: 10CFR21 Reportable Defect
Power Systems Division Reference No. 10CFR21-0050
EMD 645E4 Tandem Air Start Control System

Dear Sir,

I have been advised by our Power Systems Division of a Reportable 10CFR21 Defect regarding the EMD 645E4 Standby Diesel Generator Tandem Starting Systems. The attached report describes the Reportable Defect, and their proposed corrective action.

Additional information will be provided as it is received.

Very truly yours,

R. D. Kulchak
Director - Quality Assurance

RK189:ed56/2
Attachment
cc: F. M. Adams
H. W. Falter
V. Mitchell
M. Sharpe
File

IE19
1/1

MORRISON-KNUDSEN COMPANY, INC.
MANUFACTURING GROUP
POWER SYSTEMS DIVISION

POST OFFICE BOX 1988
ROCKY MOUNT, NORTH CAROLINA 27802-1988
PHONE (919) 977-2720 / TWX: (510) 928-0728
FAX: (919) 446-3030

INTERNATIONAL DISTRIBUTOR

10CFR21-0050

September 14, 1989

10CFR21 REPORTING OF DEFECTS
AND NON-COMPLIANCE

COMPONENT: AIR START CONTROL SYSTEM DESIGN DEFECT

SYSTEM: DIESEL-GENERATOR UNIT USED AS STANDBY POWER SUPPLIES FOR NUCLEAR POWER GENERATING STATIONS

AFFECTED UNITS: TANDEM DEISEL GENERATOR UNITS FURNISHED BY BRUCE GM OR MORRISON-KNUDSEN/POWER SYSTEMS DIVISION. THE ENGINES ARE THE MODEL EMD 645E4 DIESELS.

NORTH CAROLINA PROFESSIONAL SEAL 7033 ENGINEER HARRY WILLIAM FALTER

PREPARED BY _____ 9-14-89
Harry W. Falter, Principal Engineer — Date

APPROVED BY _____ 9/14/89
Vann Mitchell, Quality Assurance — Date

REPORTING OF 10CFR PART 21
POTENTIAL DEFECTS AND NONCOMPLIANCE

ATTACHMENT 4.2
10CFR PART 21 APPLICABILITY EVALUATION FORM

DETERMINATION OF PART 21 APPLICABILITY

~~PROCUREMENT~~ DOCUMENT NO 10CFR21-0050
REQUISITION ITEM NOS
DESCRIPTION SMD GAGEY TANDEM STANDING SYSTEM

A. **Evaluation for Items**

1. Is the item "Commercial Grade" ✓Yes __No If "YES," 10CFR 21 DEDICATED does not apply - go to C. If "NO," go to A2

2. Is the item:

Procured to ASME Section III	__Yes	✓No
Reactor Coolant Pressure Boundary	__Yes	✓No
IEEE Class 1E Electrical	✓Yes	__No
Seismic Category I	✓Yes	__No
Welding Material (ASME)	__Yes	✓No
In Core or Core-Related	__Yes	✓No

If any "YES" checked above, 10 CFR 21 applies; go to C. If all "NO," go to A3.

3. Is the item being procured the same as a complete component, system, or structure listed in the plant CSSC list? __Yes __No
If "YES," 10 CFR 21 applies; go to C.
If "NO," go to A4.

4. Would the failure of the item being procured cause a basic component not to perform its required safety functions? __Yes __No
If "YES," 10 CFR 21 applies; go to C. If "NO," 10 CFR 21 does not apply; go to C.

B. **Evaluation of Services**

1. If this is a repair service, would the item being repaired be procured as a "Commercial Grade" item? __Yes __No If "YES," 10 CFR 21 does not apply, go to C. If "NO," go to B2.

2. Could the service being procured cause a defect in a basic component or are the services connected with the design, inspection, testing, or consulting services important to the safety that are associated with a basic component. __Yes __No If "YES," 10 CFR 21 applies. If "NO," 10 CFR 21 does not apply; go to C.

C. 10 CFR 21 Does ✓ Does Not __ apply.

Evaluated by [signature] Concurrence M V Mitchel
Originator Quality Assurance
9-14-89 9/14/89
Date Date

SUMMARY

Mr. Tom Hogan and Mr. Tim Chan of TVA asked MK-PSD to review the air start system start motor recycling circuits to verify that redundancy of the systems was not defeated.

A review of the system is presented in the attached discussion. It was found that in the event of the loss of the air supply from one system, the recycling feature would continually recycle and prevent the redundant system from completing its safety function which is to start the diesel engine. The likelihood of losing the air receivers of one of the redundant systems is remote. The air receiver pressure is monitored by low pressure alarm.

Because this is a specific MK/PSD design, MK/PSD will only notify the Nuclear Power Plants that MK/PSD has determined either have or may have the design defect. This notice applies only to the tandem diesel generator arrangement.

The Nuclear Plants are as follows:

NUCLEAR POWER PLANT	MK/PSD IWO NO.	DRAWING NO.
Tennessee Valley Authority-Sequoyah Nuclear Plant	A950	A950F02501, Sh.1
Tennessee Valley Authority-Watts Bar Nuclear Plant	379	379F02501, Sh. 1
Taiwan Power - Chin Shan Nuclear Plant	B115	B115F02501, Sh. 1
Cofrentes - Hidroelectrica Espanola	6001	6001F02501, Sh. 2
Westinghouse - Proyecto Nucleoelectrico Laguna Verde	6020	6020F02501, Sh. 2
Ebasco - St. Lucie II Nuclear Plant	6002	6002F02501, Sh. 1
*Portland GE - Trojan Nuclear Plant	A071	*A071F02502, Sh. 1

*For Trojan, all pressure switches are in series. If only one pinion engages the, cycle function will stop. Two sets of start motors are required. The proposed change is required in this case also.

If you have any questions or need assistance, please write to:

Harry W. Falter, Principal Engineer
Morrison-Knudsen Company, Inc.
Power Systems Division
P.O. Box 1928
Rocky Mount, N.C. 27902-1928

DISCUSSION

The engine mounted air start system consists of a line strainer to which the piping from the air receivers is connected. The piston engaging line is a small line teed into the main air supply line after the line strainer. The piston engaging line goes through a solenoid valve with dump vent and into the piston engaging connection of the lower starter. When the solenoid valve is activated, air pressure is admitted into the piston engaging connection of the lower starter which engages the pinion with the flywheel ring gear. After the lower starter pinion is engaged, air is admitted to the upper air start motor engaging mechanism. After both pinions mesh with the flywheel ring gear, control air flows to the opening piston in the air relay valve. The main starting air supply is then admitted to the air start motors to crank the engine.

Once the engine starts and accelerates toward rated speed, a speed switch automatically opens the signal to the solenoid air valve causing it to shut off the air supply and also bleed air pressure from the relay air piston through the check valve. The air is bled through the solenoid valve and exhausted into the engine room by means of its dump vent. As the air is bled from the system, the relay air valve and start motor pinions reset.

On rare occasions during the pinion engaging process, the pinion teeth may abut against the teeth of the flywheel ring gear and gear engagement will not occur. This effectively blocks control air from the air relay valve thus preventing the engine from cranking.

A pressure switch between the relay air valve and the lubricator will monitor the pinion engagement. If the pinions both engage the relay air valve will open and the air pressure will open contacts in the pressure switch. The pressure setting is approximately 5 psig.

The contacts in the pressure switch are in series with a time delay relay in the starting control circuit. The time delay relay is set to pick up between 0.5 to 0.75 seconds after the start signal is initiated. When the time delay relay picks up, its contacts will open the circuit of the relays that control the solenoid air valve, causing the air valve to close and vent the line to the starting motor pinion engaging mechanism. This will cause the pinions to retract. When the time delay relay picks up, it will open one of its contacts in series with its coil and the relay will drop out and again complete the circuit to the solenoid

DISCUSSION (CONT)

air valve for another attempt to engage the pinion gears with the flywheel ring gear and complete the circuit to the air relay valve to admit air to the air start motors. See Fig. 2.

For diesel engines in nuclear service as standby power supplies, redundant air start systems are employed. There are two separate sets of air receivers and air start motor systems used.

The pinion recycle circuit for the pressure switch designs are as shown in Fig. 3. For a single engine arrangement only one set of the redundant starting systems is required to perform the starting function. The circuit shown provides the recycle feature if both sets of pinions fail to engage. If one of the two sets of air supply system is lost or if one set of pinions fails to engage, the remaining system will start the diesel. This system has no design defect when used on single diesel generators.

The arrangement for diesels in a tandem arrangement is shown in Fig. 4. In this arrangement, each one of the tandem engines has its own air receivers and two sets of engine mounted air start systems. In total, the tandem has two redundant sets of air receivers and two redundant sets of two air start systems or four sets of motors. It requires two air start motors to start the tandem arrangement.

For the recycle feature to activate it would require that both sets of pinions in either the "A" or the "B" circuit to fail to engage. This would cause the recycling of the engagement. Experience has shown that the likelihood of both pinions failing to engage is a very remote possibility and that engagement is almost certain on the second attempt. Therefore, with both air receivers adequately charged with air, this does not appear to pose a safety related problem.

However, if one of the air supply banks is disabled and there is no air pressure in that system, then the one set of pressure switches would remain closed and cause relay TD to recycle continually and prevent the redundant system from completing its starting function. The diesel generator would be prevented from performing its safety function. The air receiver pressure is monitored so that loss of air receiver pressure would not go unnoticed.

An engineering study will be initiated by Morrison-Knudsen/Power Systems Division to provide a resolution to this problem.

RESOLUTION

The problem of continuous pinion engagement recycling when an air supply bank has no air pressure has to be corrected.

The arrangement of the pressure switches that monitor starting air pressure to the air start motors for tandem arrangement units shall be as follows:

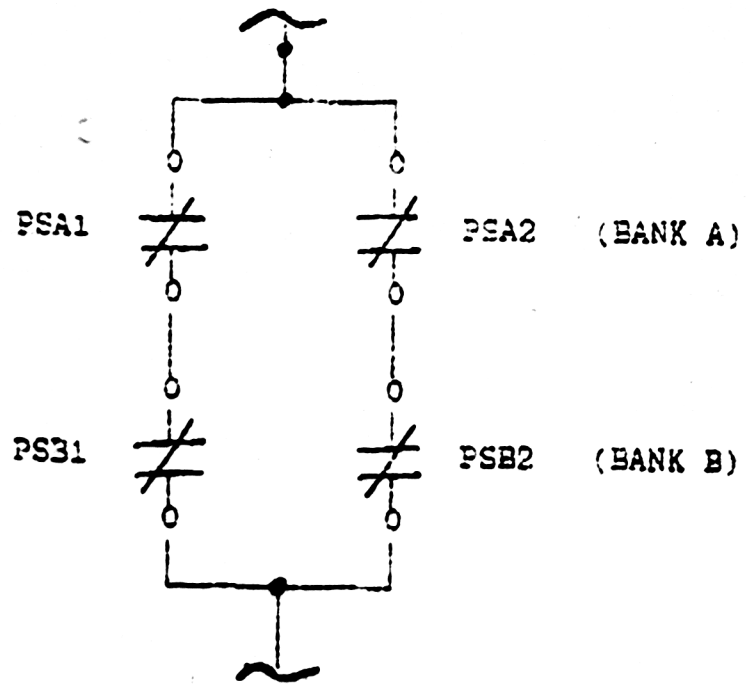

If one bank (A or B) of air receivers were inactive for any reason such that air pressure were not available to its respective sets of air start motors, the pressure switch contacts for that bank would remain closed. Since it requires two of the four sets of air motors to start a tandem arrangement, both of the active set of air motors pinions must engage the flywheel gear. If only one engages, the system will recycle until both pinions engage. If one air supply does not have pressure, there will be no continuous recycle of the pinions and the diesel will perform its safety function.

If both sets of air receivers are active, then at least one air motor pinion from each parallel circuit above must engage to open the circuit to the recycling relays. If the two in series on one side engaged and the two in series on the opposite side did not, the system would also recycle until both parallel circuits have opened. Momentary recycling to get pinion gear engagement does not prevent the diesel generator from performing its safety function.

This arrangement effectively corrects the problem in the event where one set of the redundant air receivers or air supply is disrupted.

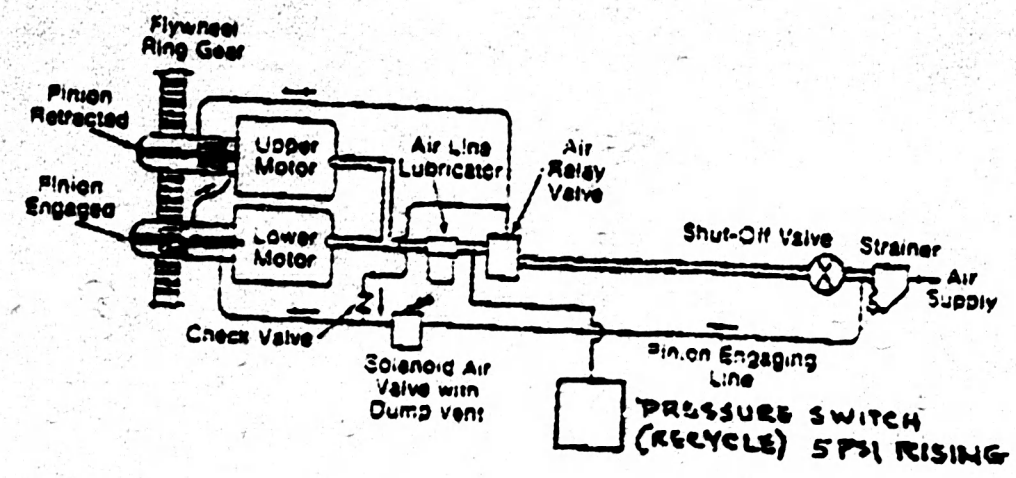

Starter Motor Air Circuit FIG 1

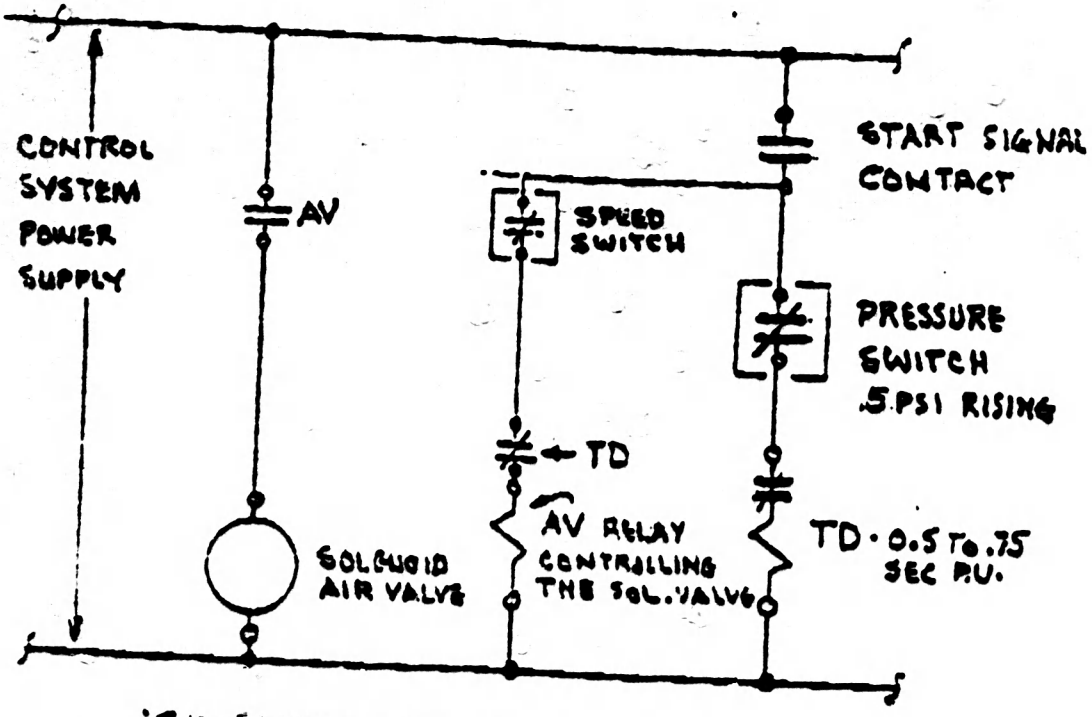

SIMPLIFIED TYPICAL CONTROL CIRCUIT FIG 2

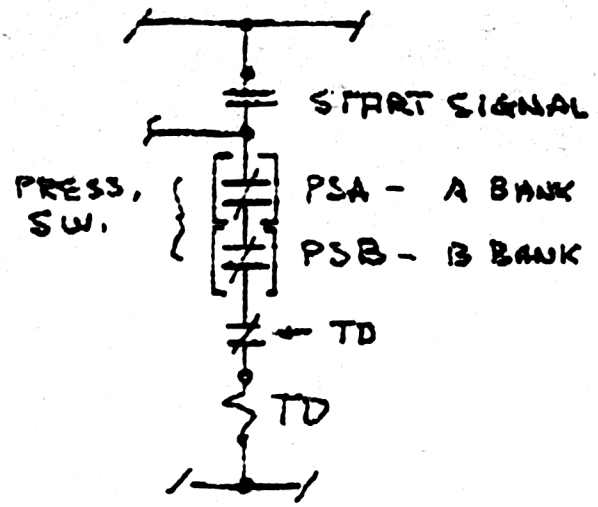
START SIGNAL
PRESS. SW.
PSA - A BANK
PSB - B BANK
TD
TD

FIG 3

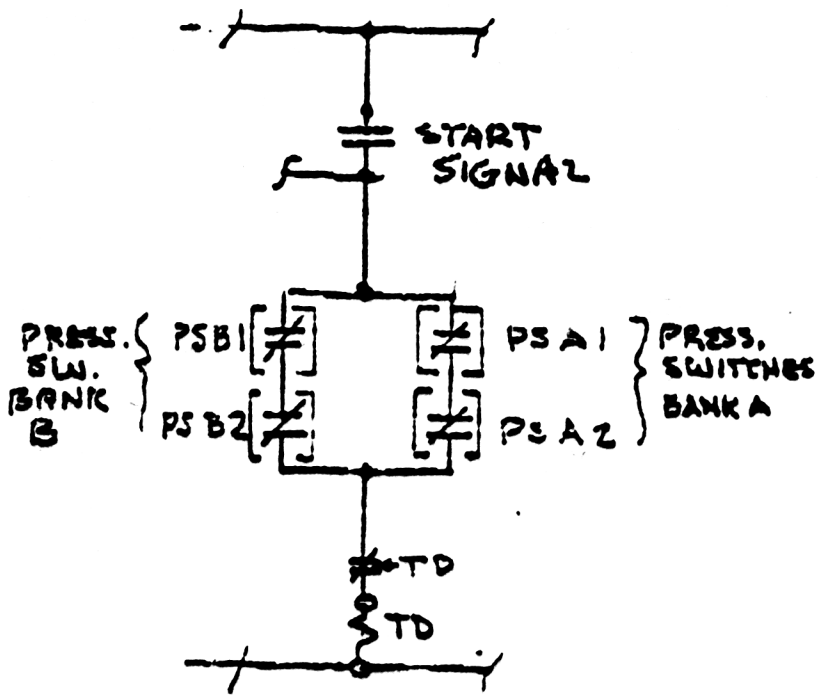
START SIGNAL
PRESS. SW. BANK B
PSB1
PSB2
PSA1
PSA2
PRESS. SWITCHES BANK A
TD
TD

Fig 4

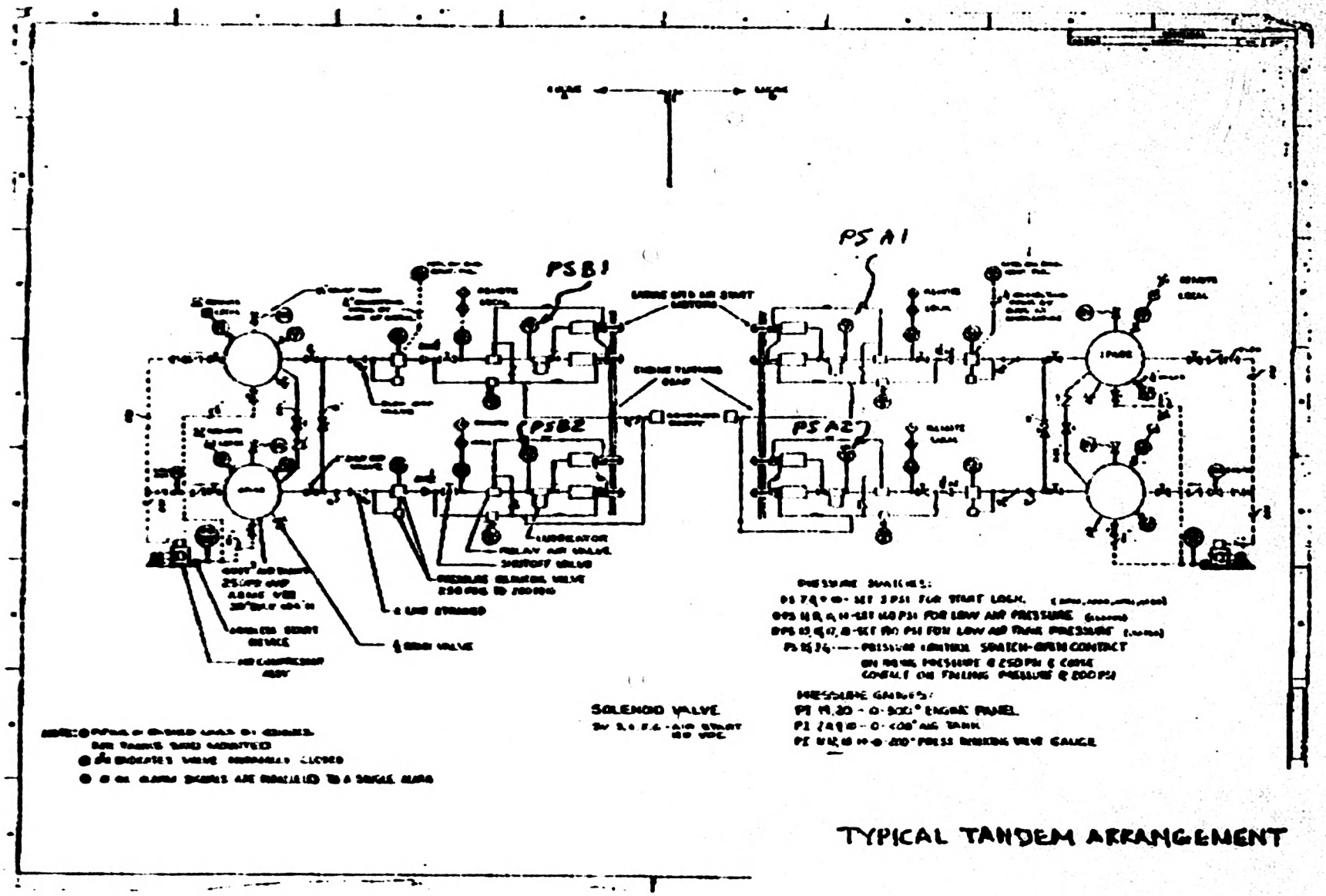

TYPICAL TANDEM ARRANGEMENT

MORRISON-KNUDSEN COMPANY, INC.
MORRISON-KNUDSEN PLAZA
P.O. BOX 7688
BOISE, IDAHO U.S.A. 83729

BOISE IDAHO SEP 15 '80 U.S. POSTAGE 0.65

Mr. Thomas Murley, Director

Office of Nuclear Reactor Regulation
11555 Rockwell Pike
Rockwell, Maryland
20852

FIRST CLASS