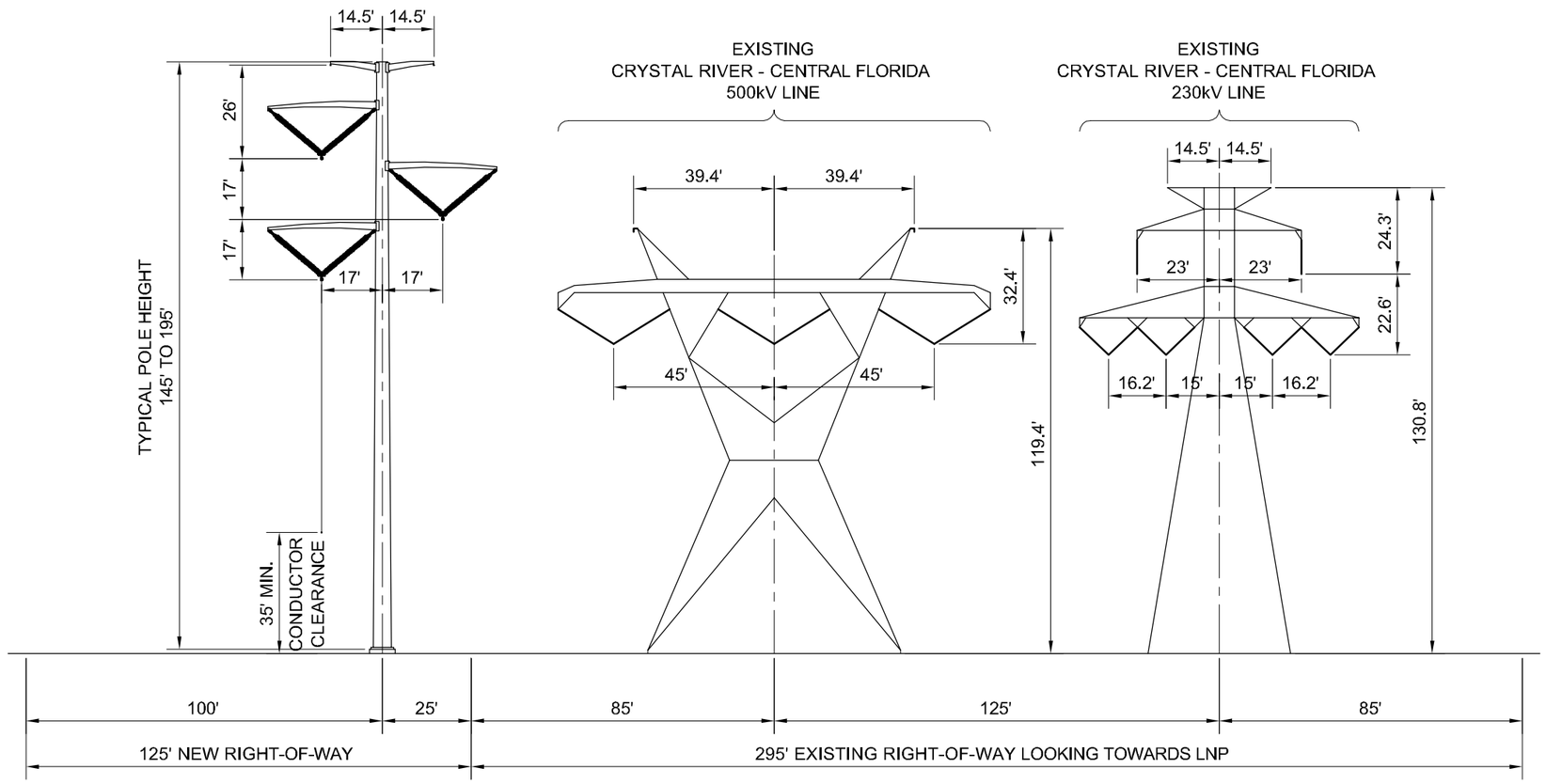

NOTE:
1. TYPICAL PIER FOUNDATION TO BE 8' TO 11' IN DIAMETER.

0 20 40
Feet

Progress Energy Florida

Levy Nuclear Plant
Units 1 and 2
Part 3, Environmental Report

Typical Tangent Steel Monopole Structure
Parallel (Left) to Existing PEF 230/500 kV Right-of-Way
FIGURE 3.7-21

Rev 0