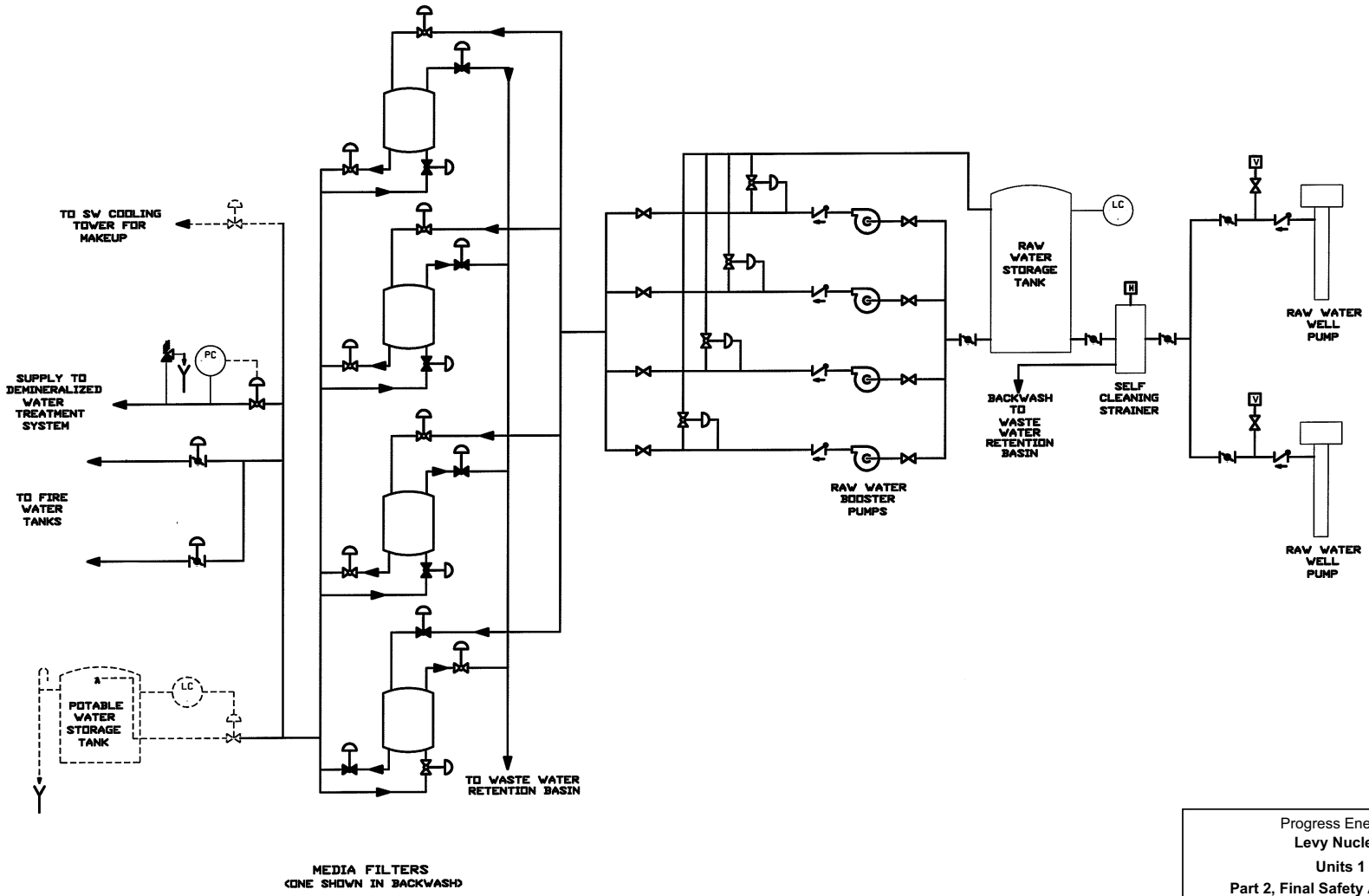

Progress Energy Florida
Levy Nuclear Plant
Units 1 and 2
Part 2, Final Safety Analysis Report

Raw Water System (Freshwater Subsystem)

FIGURE 9.2-201

Rev. 0