Jan Cowin, MBA, MT (ASCP), SLS
Environment, Health & Safety Manager
Quest Diagnostics Incorporated
Kansas Business Unit & ExamOne
11636 Administration Drive
Phone: 314-872-7572 or 1-800-669-7525 ext. 7572
Fax: 314-872-7443

Quest Diagnostics

FAX COVER SHEET

DATE: August 12, 2008 **TIME:**

TO: Loren Hueter **PHONE:**

COMPANY: **US, NRC** **FAX:**

FROM: Jan Cowin **PHONE:** 872-7572
FAX: 872-7443

RE: Final Survey – 11636 Administration Drive, St. Louis, MO 63146
COPY:

CONFIDENTIALITY NOTICE:

This fax transmission contains confidential information, belonging to the sender, which may include proprietary information of Quest Diagnostics. The information is intended only for the use of the individual identified above. If you are not the intended recipient, you are hereby notified that any disclosure, copying, distribution or the taking of any action in reliance on the contents of this faxed information is strictly prohibited. If you have received this fax in error, please notify us by telephone immediately to arrange for return or destruction of the documents.

R. M. WESTER *and ASSOCIATES, INC.*
215 INDACOM DRIVE - ST. PETERS, MISSOURI 63376
(636) 928-9628 - FAX (636) 928-9857
RMWester.com

July 11, 2008

Jan Cowin
Quest Diagnostics
2040 Concourse Drive
St. Louis, MO 63146

Dear Ms. Cowin,

I have completed and reviewed the survey report of the work completed by Tjaden Meyer and Geoffrey Wester on June 23rd through June 27th, 2008 when they surveyed the I-125 Decay in Storage Room, its contents, the hallway leading from there to the loading dock, and the loading dock itself at the Quest Diagnostics building (11636 Administrative Drive, Saint Louis, MO 63146).

The detailed survey, which is included with this letter, indicates that the I-125 Decay in Storage Room, its contents, the hallway leading from there to the loading dock, and the loading dock itself are free of I-125 contamination.

It has been a pleasure doing business with you and your company. Please feel free to contact Tjaden Meyer or myself if you have any questions or when we can be of further service.

Sincerely,
R. M. Wester and Associates, Inc.

Kenneth Barnes
Health Physicist

Enclosure:
Quest Survey Report

R. M. Wester and Associates, Inc.
Quest Survey Report
July 10, 2008

Survey:

On June 23rd through June 27th, 2008 Tjaden Meyer and Geoffrey Wester surveyed the I-125 Decay in Storage Room, its contents, the hallway leading from there to the loading dock, and the loading dock itself at the Quest Diagnostics building (11636 Administrative Drive, Saint Louis, MO 63146). The survey was performed by taking wipes and scanning the surfaces with a Ludlum Model 3 Survey Meter (SN: 109117, calibrated May 7, 2008, and calibration checked daily) with a Ludlum 44-3 probe (SN: PR071278). The grid elements used to cover these areas were one square meter or less.

Analysis Summary:

All of the wipes were processed using the Perkin Elmer Wizard 3" Gamma Counter (SN: 4800614, calibration checked daily). To a 95% confidence level the wipes were found to be free of I-125 contamination, indicated no removable I-125 contamination on the surfaces. Review of the data from scanning the surfaces with the survey meter indicated no detectable radiological surface contamination.

Conclusion:

The detailed survey indicates that the I-125 Decay in Storage Room, its contents, the hallway leading from there to the loading dock, and the loading dock itself are free of I-125 contamination.

Analysis Performed By:

R. M. Wester and Associates, Inc.

Kenneth Barnes
Health Physicist

R. M. Wester and Associates, Inc.
Quest Survey

I-125 Decay in Storage Room Equipment						
Item	Wipe Number	Wipe cpm	Wipe dpm/ 100 cm^2	Wipe µCi/100 cm^2	Survey Meter cpm	Survey Meter dpm/100 cm^2
Computer	1A	23.9	≤ 35.3	≤ 1.59*10^{-5}	200	≤ 2400
Computer	2A	29.0	≤ 35.3	≤ 1.59*10^{-5}	200	≤ 2400
Computer	3A	25.0	≤ 35.3	≤ 1.59*10^{-5}	200	≤ 2400
Computer	4A	24.5	≤ 35.3	≤ 1.59*10^{-5}	200	≤ 2400
Computer	5A	23.1	≤ 35.3	≤ 1.59*10^{-5}	200	≤ 2400
Computer	6A	24.0	≤ 35.3	≤ 1.59*10^{-5}	200	≤ 2400
Computer	7A	26.7	≤ 35.3	≤ 1.59*10^{-5}	200	≤ 2400
Computer	8A	23.0	≤ 35.3	≤ 1.59*10^{-5}	200	≤ 2400
Keyboard	9A	26.2	≤ 35.3	≤ 1.59*10^{-5}	200	≤ 2400
Keyboard	10A	23.9	≤ 35.3	≤ 1.59*10^{-5}	200	≤ 2400
Well Counter	11A	26.5	≤ 35.3	≤ 1.59*10^{-5}	200	≤ 2400
Well Counter	12A	28.8	≤ 35.3	≤ 1.59*10^{-5}	200	≤ 2400
Well Counter	13A	26.9	≤ 35.3	≤ 1.59*10^{-5}	200	≤ 2400
Well Counter	14A	29.0	≤ 35.3	≤ 1.59*10^{-5}	200	≤ 2400
Well Counter	15A	27.4	≤ 35.3	≤ 1.59*10^{-5}	200	≤ 2400
Trash Can 1	16A	26.0	≤ 35.3	≤ 1.59*10^{-5}	200	≤ 2400
Trash Can 1	17A	24.6	≤ 35.3	≤ 1.59*10^{-5}	200	≤ 2400
Trash Can 1	18A	42.0	≤ 35.3	≤ 1.59*10^{-5}	200	≤ 2400
Trash Can 1	19A	30.6	≤ 35.3	≤ 1.59*10^{-5}	200	≤ 2400
Trash Can 2	20A	26.8	≤ 35.3	≤ 1.59*10^{-5}	200	≤ 2400

I-125 Decay in Storage Room Equipment						
Item	Wipe Number	Wipe cpm	Wipe dpm/ 100 cm^2	Wipe µCi/100 cm^2	Survey Meter cpm	Survey Meter dpm/100 cm^2
Trash Can 2	21A	29.4	≤ 35.3	≤ $1.59*10^{-5}$	200	≤ 2400
Trash Can 2	22A	30.7	≤ 35.3	≤ $1.59*10^{-5}$	200	≤ 2400
Trash Can 2	23A	29.1	≤ 35.3	≤ $1.59*10^{-5}$	200	≤ 2400
Mobile Staircase	24A	27.9	≤ 35.3	≤ $1.59*10^{-5}$	200	≤ 2400
Mobile Staircase	25A	30.3	≤ 35.3	≤ $1.59*10^{-5}$	200	≤ 2400
Mobile Staircase	26A	26.6	≤ 35.3	≤ $1.59*10^{-5}$	200	≤ 2400
Mobile Staircase	27A	24.6	≤ 35.3	≤ $1.59*10^{-5}$	200	≤ 2400
Plastic Chair	28A	24.1	≤ 35.3	≤ $1.59*10^{-5}$	200	≤ 2400
Plastic Chair	29A	23.9	≤ 35.3	≤ $1.59*10^{-5}$	200	≤ 2400
Plastic Chair	30A	27.5	≤ 35.3	≤ $1.59*10^{-5}$	200	≤ 2400
Plastic Chair	31A	29.3	≤ 35.3	≤ $1.59*10^{-5}$	200	≤ 2400
Plastic Chair	32A	28.3	≤ 35.3	≤ $1.59*10^{-5}$	200	≤ 2400
Table	33A	27.7	≤ 35.3	≤ $1.59*10^{-5}$	200	≤ 2400
Table	34A	27.8	≤ 35.3	≤ $1.59*10^{-5}$	200	≤ 2400
Table	35A	25.6	≤ 35.3	≤ $1.59*10^{-5}$	200	≤ 2400
Table	36A	32.0	≤ 35.3	≤ $1.59*10^{-5}$	200	≤ 2400
Shelf Top 1	37A	26.3	≤ 35.3	≤ $1.59*10^{-5}$	200	≤ 2400
Shelf Bottom 1	38A	23.4	≤ 35.3	≤ $1.59*10^{-5}$	200	≤ 2400
Shelf Top 2	39A	25.0	≤ 35.3	≤ $1.59*10^{-5}$	200	≤ 2400
Shelf Bottom 2	40A	27.3	≤ 35.3	≤ $1.59*10^{-5}$	200	≤ 2400

I-125 Decay in Storage Room Equipment						
Item	Wipe Number	Wipe cpm	Wipe dpm/ 100 cm^2	Wipe $\mu Ci/100\ cm^2$	Survey Meter cpm	Survey Meter dpm/100 cm^2
Shelf Top 3	41A	26.6	≤ 35.3	≤ $1.59*10^{-5}$	200	≤ 2400
Shelf Bottom 3	42A	27.1	≤ 35.3	≤ $1.59*10^{-5}$	200	≤ 2400
Shelf Top 4	43A	22.9	≤ 35.3	≤ $1.59*10^{-5}$	200	≤ 2400
Shelf Bottom 4	44A	23.7	≤ 35.3	≤ $1.59*10^{-5}$	200	≤ 2400
Shelf Top 5	45A	28.0	≤ 35.3	≤ $1.59*10^{-5}$	200	≤ 2400
Shelf Bottom 5	46A	27.4	≤ 35.3	≤ $1.59*10^{-5}$	200	≤ 2400
Shelf Top 6	47A	26.7	≤ 35.3	≤ $1.59*10^{-5}$	200	≤ 2400
Shelf Bottom 6	48A	24.4	≤ 35.3	≤ $1.59*10^{-5}$	200	≤ 2400
Shelf Top 7	49A	26.4	≤ 35.3	≤ $1.59*10^{-5}$	200	≤ 2400
Shelf Bottom 7	50A	26.8	≤ 35.3	≤ $1.59*10^{-5}$	200	≤ 2400
Shelf Top 8	51A	27.9	≤ 35.3	≤ $1.59*10^{-5}$	200	≤ 2400
Shelf Bottom 8	52A	25.0	≤ 35.3	≤ $1.59*10^{-5}$	200	≤ 2400
Shelf Top 9	53A	25.2	≤ 35.3	≤ $1.59*10^{-5}$	200	≤ 2400
Shelf Bottom 9	54A	29.7	≤ 35.3	≤ $1.59*10^{-5}$	200	≤ 2400
Shelf Top 10	55A	25.6	≤ 35.3	≤ $1.59*10^{-5}$	200	≤ 2400
Shelf Bottom 10	56A	27.4	≤ 35.3	≤ $1.59*10^{-5}$	200	≤ 2400
Shelf Top 11	57A	26.8	≤ 35.3	≤ $1.59*10^{-5}$	200	≤ 2400
Shelf Bottom 11	58A	28.5	≤ 35.3	≤ $1.59*10^{-5}$	200	≤ 2400
Shelf Top 12	59A	24.6	≤ 35.3	≤ $1.59*10^{-5}$	200	≤ 2400
Shelf Bottom 12	60A	26.8	≤ 35.3	≤ $1.59*10^{-5}$	200	≤ 2400

I-125 Decay in Storage Room Equipment						
Item	Wipe Number	Wipe cpm	Wipe dpm/ 100 cm^2	Wipe µCi/100 cm^2	Survey Meter cpm	Survey Meter dpm/100 cm^2
Shelf Top 13	61A	25.8	≤ 35.3	≤ $1.59*10^{-5}$	200	≤ 2400
Shelf Bottom 13	62A	24.1	≤ 35.3	≤ $1.59*10^{-5}$	200	≤ 2400
Shelf Top 14	63A	30.6	≤ 35.3	≤ $1.59*10^{-5}$	200	≤ 2400
Shelf Bottom 14	64A	25.3	≤ 35.3	≤ $1.59*10^{-5}$	200	≤ 2400
Shelf Top 15	65A	23.6	≤ 35.3	≤ $1.59*10^{-5}$	200	≤ 2400
Shelf Bottom 15	66A	26.5	≤ 35.3	≤ $1.59*10^{-5}$	200	≤ 2400
Shelf Top 16	67A	23.7	≤ 35.3	≤ $1.59*10^{-5}$	200	≤ 2400
Shelf Bottom 16	68A	27.5	≤ 35.3	≤ $1.59*10^{-5}$	200	≤ 2400
Shelf Top 17	69A	25.6	≤ 35.3	≤ $1.59*10^{-5}$	200	≤ 2400
Shelf Bottom 17	70A	26.6	≤ 35.3	≤ $1.59*10^{-5}$	200	≤ 2400
Shelf Top 18	71A	31.9	≤ 35.3	≤ $1.59*10^{-5}$	200	≤ 2400
Shelf Bottom 18	72A	26.3	≤ 35.3	≤ $1.59*10^{-5}$	200	≤ 2400
Shelf Top 19	73A	27.7	≤ 35.3	≤ $1.59*10^{-5}$	200	≤ 2400
Shelf Bottom 19	74A	31.4	≤ 35.3	≤ $1.59*10^{-5}$	200	≤ 2400
Shelf Top 20	75A	29.4	≤ 35.3	≤ $1.59*10^{-5}$	200	≤ 2400
Shelf Bottom 20	76A	27.1	≤ 35.3	≤ $1.59*10^{-5}$	200	≤ 2400
Shelf Top 21	77A	27.5	≤ 35.3	≤ $1.59*10^{-5}$	200	≤ 2400
Shelf Bottom 21	78A	23.2	≤ 35.3	≤ $1.59*10^{-5}$	200	≤ 2400
Shelf Top 22	79A	27.0	≤ 35.3	≤ $1.59*10^{-5}$	200	≤ 2400
Shelf Bottom 22	80A	28.2	≤ 35.3	≤ $1.59*10^{-5}$	200	≤ 2400

I-125 Decay in Storage Room Equipment						
Item	Wipe Number	Wipe cpm	Wipe dpm/ 100 cm^2	Wipe µCi/100 cm^2	Survey Meter cpm	Survey Meter dpm/100 cm^2
Shelf Top 23	81A	25.3	≤ 35.3	≤ $1.59*10^{-5}$	200	≤ 2400
Shelf Bottom 23	82A	26.8	≤ 35.3	≤ $1.59*10^{-5}$	200	≤ 2400
Shelf Top 24	83A	23.0	≤ 35.3	≤ $1.59*10^{-5}$	200	≤ 2400
Shelf Bottom 24	84A	31.0	≤ 35.3	≤ $1.59*10^{-5}$	200	≤ 2400
Shelf Top 25	85A	23.3	≤ 35.3	≤ $1.59*10^{-5}$	200	≤ 2400
Shelf Bottom 25	86A	27.6	≤ 35.3	≤ $1.59*10^{-5}$	200	≤ 2400
Shelf Top 26	87A	24.0	≤ 35.3	≤ $1.59*10^{-5}$	200	≤ 2400
Shelf Bottom 26	88A	30.1	≤ 35.3	≤ $1.59*10^{-5}$	200	≤ 2400
Shelf Top 27	89A	26.1	≤ 35.3	≤ $1.59*10^{-5}$	200	≤ 2400
Shelf Bottom 27	90A	28.4	≤ 35.3	≤ $1.59*10^{-5}$	200	≤ 2400
Shelf Top 28	91A	27.3	≤ 35.3	≤ $1.59*10^{-5}$	200	≤ 2400
Shelf Bottom 28	92A	27.0	≤ 35.3	≤ $1.59*10^{-5}$	200	≤ 2400
Shelf Top 29	93A	29.5	≤ 35.3	≤ $1.59*10^{-5}$	200	≤ 2400
Shelf Bottom 29	94A	30.4	≤ 35.3	≤ $1.59*10^{-5}$	200	≤ 2400
Shelf Top 30	95A	32.0	≤ 35.3	≤ $1.59*10^{-5}$	200	≤ 2400
Shelf Bottom 30	96A	23.8	≤ 35.3	≤ $1.59*10^{-5}$	200	≤ 2400
Side Panel 1	97A	23.3	≤ 35.3	≤ $1.59*10^{-5}$	200	≤ 2400
Side Panel 2	98A	29.6	≤ 35.3	≤ $1.59*10^{-5}$	200	≤ 2400
Desk Fixture 1	99A	27.7	≤ 35.3	≤ $1.59*10^{-5}$	200	≤ 2400
Desk Fixture 1	100A	29.4	≤ 35.3	≤ $1.59*10^{-5}$	200	≤ 2400

I-125 Decay in Storage Room Equipment						
Item	Wipe Number	Wipe cpm	Wipe dpm/ 100 cm^2	Wipe µCi/100 cm^2	Survey Meter cpm	Survey Meter dpm/100 cm^2
Desk Fixture 2	101A	27.3	≤ 35.3	≤ $1.59*10^{-5}$	200	≤ 2400
Desk Fixture 2	102A	27.7	≤ 35.3	≤ $1.59*10^{-5}$	200	≤ 2400
Bracket Bundle	103A	24.5	≤ 35.3	≤ $1.59*10^{-5}$	200	≤ 2400
Bracket Bundle	104A	25.7	≤ 35.3	≤ $1.59*10^{-5}$	200	≤ 2400
Desk Light 1	105A	25.8	≤ 35.3	≤ $1.59*10^{-5}$	200	≤ 2400
Desk Light 1	106A	26.7	≤ 35.3	≤ $1.59*10^{-5}$	200	≤ 2400
Desk Light 2	107A	26.3	≤ 35.3	≤ $1.59*10^{-5}$	200	≤ 2400
Desk Light 2	108A	25.9	≤ 35.3	≤ $1.59*10^{-5}$	200	≤ 2400
Desk Light 3	109A	25.3	≤ 35.3	≤ $1.59*10^{-5}$	200	≤ 2400
Desk Light 3	110A	23.8	≤ 35.3	≤ $1.59*10^{-5}$	200	≤ 2400
Desk Light 4	111A	30.2	≤ 35.3	≤ $1.59*10^{-5}$	200	≤ 2400
Desk Light 4	112A	24.5	≤ 35.3	≤ $1.59*10^{-5}$	200	≤ 2400
Desk Light 5	113A	25.6	≤ 35.3	≤ $1.59*10^{-5}$	200	≤ 2400
Desk Light 5	114A	25.0	≤ 35.3	≤ $1.59*10^{-5}$	200	≤ 2400
Desk Track 1	115A	25.3	≤ 35.3	≤ $1.59*10^{-5}$	200	≤ 2400
Desk Track 1	116A	28.0	≤ 35.3	≤ $1.59*10^{-5}$	200	≤ 2400
Desk Track 2	117A	24.4	≤ 35.3	≤ $1.59*10^{-5}$	200	≤ 2400
Desk Track 2	118A	25.5	≤ 35.3	≤ $1.59*10^{-5}$	200	≤ 2400
Desk Extension 1	119A	26.9	≤ 35.3	≤ $1.59*10^{-5}$	200	≤ 2400
Desk Extension 2	120A	25.0	≤ 35.3	≤ $1.59*10^{-5}$	200	≤ 2400

I-125 Decay in Storage Room Equipment						
Location	Wipe	cpm	Net dpm	Net µCi	Survey Meter cpm	Survey Meter dpm/100 cm^2
Desk Extension 3	121A	23.9	≤ 35.3	≤ $1.59*10^{-5}$	200	≤ 2400
Desk Extension 4	122A	25.7	≤ 35.3	≤ $1.59*10^{-5}$	200	≤ 2400
Desk Extension 5	123A	27.5	≤ 35.3	≤ $1.59*10^{-5}$	200	≤ 2400
Desk Extension 6	124A	28.8	≤ 35.3	≤ $1.59*10^{-5}$	200	≤ 2400
Desk Extension 7	125A	25.0	≤ 35.3	≤ $1.59*10^{-5}$	200	≤ 2400
Desk Extension 8	126A	30.2	≤ 35.3	≤ $1.59*10^{-5}$	200	≤ 2400
Desk Extension 9	127A	27.5	≤ 35.3	≤ $1.59*10^{-5}$	200	≤ 2400
Desk Extension 10	128A	27.6	≤ 35.3	≤ $1.59*10^{-5}$	200	≤ 2400
Desk Extension 11	129A	26.8	≤ 35.3	≤ $1.59*10^{-5}$	200	≤ 2400
Desk Extension 12	130A	23.5	≤ 35.3	≤ $1.59*10^{-5}$	200	≤ 2400
Desk Extension 13	131A	28.5	≤ 35.3	≤ $1.59*10^{-5}$	200	≤ 2400
Desk Extension 14	132A	28.3	≤ 35.3	≤ $1.59*10^{-5}$	200	≤ 2400
Desk Extension 15	133A	30.2	≤ 35.3	≤ $1.59*10^{-5}$	200	≤ 2400
Desk Extension 16	134A	28.8	≤ 35.3	≤ $1.59*10^{-5}$	200	≤ 2400
Desk Extension 17	135A	26.0	≤ 35.3	≤ $1.59*10^{-5}$	200	≤ 2400
Desk Extension 18	136A	25.4	≤ 35.3	≤ $1.59*10^{-5}$	200	≤ 2400
Desk Extension 19	137A	25.4	≤ 35.3	≤ $1.59*10^{-5}$	200	≤ 2400
Desk Extension 20	138A	25.2	≤ 35.3	≤ $1.59*10^{-5}$	200	≤ 2400
Desk Extension 21	139A	33.7	≤ 35.3	≤ $1.59*10^{-5}$	200	≤ 2400
Desk Extension 22	140A	25.6	≤ 35.3	≤ $1.59*10^{-5}$	200	≤ 2400

I-125 Decay in Storage Room Equipment						
Item	Wipe Number	Wipe cpm	Wipe dpm/ 100 cm^2	Wipe $\mu Ci/100\ cm^2$	Survey Meter cpm	Survey Meter dpm/100 cm^2
Desk Extension 23	141A	22.8	≤ 35.3	≤ $1.59*10^{-5}$	200	≤ 2400
Desk Extension 24	142A	27.1	≤ 35.3	≤ $1.59*10^{-5}$	200	≤ 2400
Desk Extension 25	143A	27.5	≤ 35.3	≤ $1.59*10^{-5}$	200	≤ 2400
Desk Extension 26	144A	27.7	≤ 35.3	≤ $1.59*10^{-5}$	200	≤ 2400
Desk Extension 27	145A	25.7	≤ 35.3	≤ $1.59*10^{-5}$	200	≤ 2400
Desk Extension 28	146A	25.9	≤ 35.3	≤ $1.59*10^{-5}$	200	≤ 2400

Perkin Elmer Wizard 3" Gamma Counter (serial number 4800614, calibration checked daily)

I-129 Standard:	113220 dpm
Efficiency Check:	84463 cpm
Efficiency:	74.6%
Run time:	1 minute
Minimum Detectable Activity:	35.3 dpm, $1.59*10^{-5}$ µCi

Ludlum Model 3 Survey Meter (serial number 109117, calibrated May 7, 2008)

Ludlum Model 44-3 Probe:	SN: PR071278
Background:	200 cpm
I-129 Standard:	207792 dpm
Efficiency Check:	52620 cpm
Efficiency:	25.3%
Minimum Detectable Activity:	2400 dpm/100 cm^2 .0011 µCi/100 cm^2

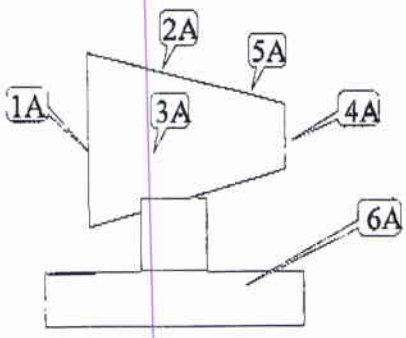

Monitor

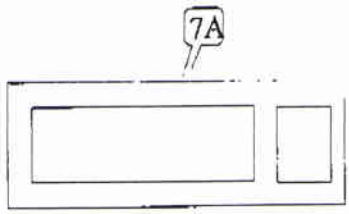

Keyboard 1

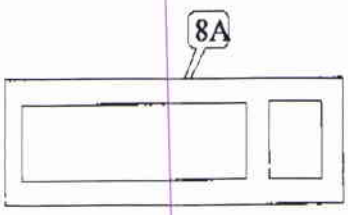

Keyboard 2

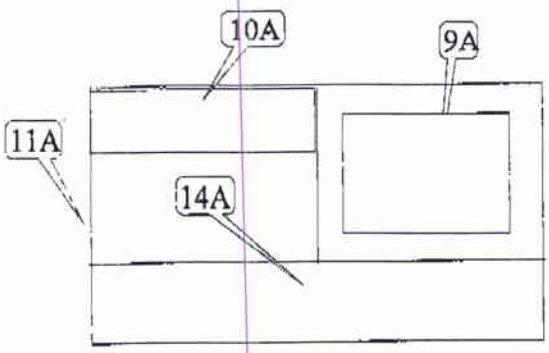

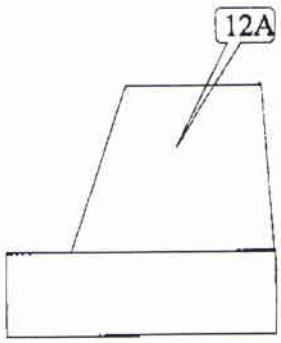

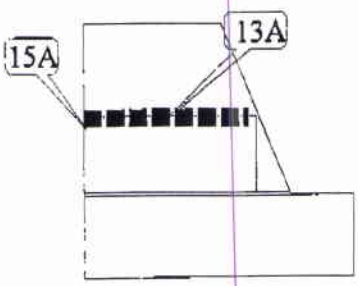

Well Counter

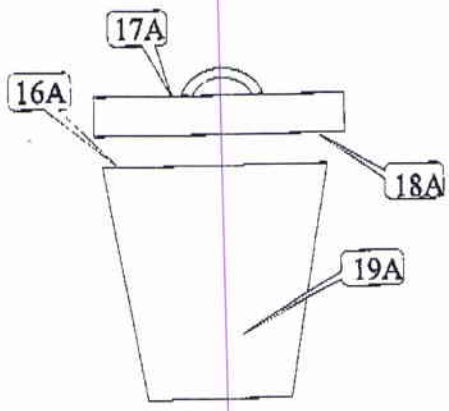

Trash Can 1

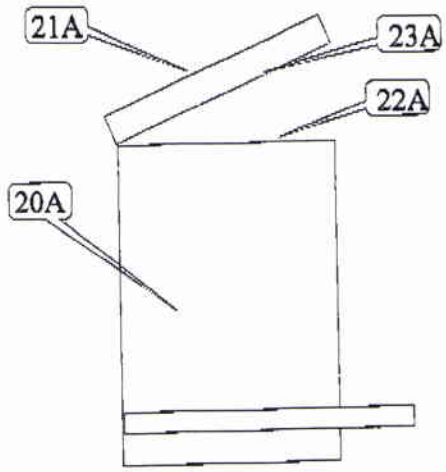

Trash Can 2

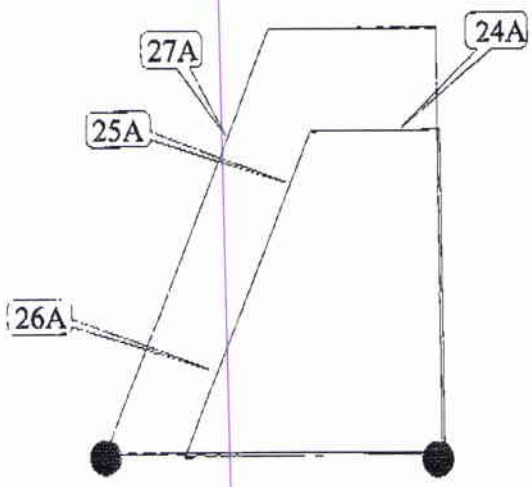

Mobile Staircase

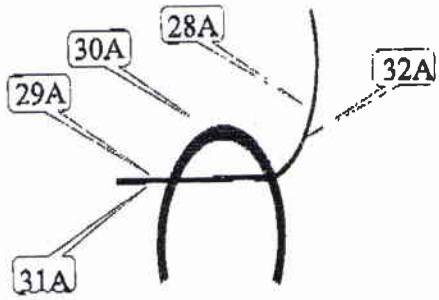

Plastic Chair

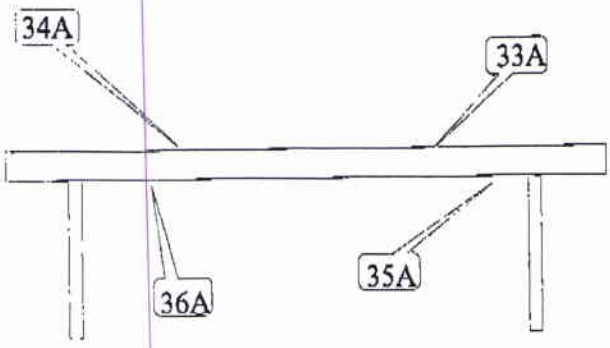

Table

R. M. Wester and Associates, Inc.
Quest Survey

I-125 Decay in Storage Room						
Location	Wipe Number	Wipe cpm	Wipe dpm/ 100 cm^2	Wipe µCi/100 cm^2	Survey Meter cpm	Survey Meter dpm/100 cm^2
Floor	1B	36.0	≤ 41.5	≤ $1.87*10^{-5}$	200	≤ 2400
Floor	2B	22.0	≤ 41.5	≤ $1.87*10^{-5}$	200	≤ 2400
Floor	3B	28.0	≤ 41.5	≤ $1.87*10^{-5}$	200	≤ 2400
Floor	4B	30.0	≤ 41.5	≤ $1.87*10^{-5}$	200	≤ 2400
Floor	5B	30.0	≤ 41.5	≤ $1.87*10^{-5}$	100	≤ 2400
Floor	6B	34.5	≤ 41.5	≤ $1.87*10^{-5}$	300	≤ 2400
Floor	7B	26.7	≤ 41.5	≤ $1.87*10^{-5}$	100	≤ 2400
Floor	8B	22.0	≤ 41.5	≤ $1.87*10^{-5}$	100	≤ 2400
Floor	9B	24.0	≤ 41.5	≤ $1.87*10^{-5}$	100	≤ 2400
Floor	10B	23.7	≤ 41.5	≤ $1.87*10^{-5}$	100	≤ 2400
Hallway	11B	28.0	≤ 41.5	≤ $1.87*10^{-5}$	100	≤ 2400
Bottom Shelf	12B	37.0	≤ 41.5	≤ $1.87*10^{-5}$	100	≤ 2400
Bottom Shelf	13B	25.0	≤ 41.5	≤ $1.87*10^{-5}$	100	≤ 2400
Bottom Shelf	14B	40.7	≤ 41.5	≤ $1.87*10^{-5}$	200	≤ 2400
Bottom Shelf	15B	30.7	≤ 41.5	≤ $1.87*10^{-5}$	200	≤ 2400
Bottom Shelf	16B	28.0	≤ 41.5	≤ $1.87*10^{-5}$	300	≤ 2400
Bottom Shelf	17B	34.7	≤ 41.5	≤ $1.87*10^{-5}$	300	≤ 2400
Bottom Shelf	18B	24.7	≤ 41.5	≤ $1.87*10^{-5}$	200	≤ 2400
Bottom Shelf	19B	23.0	≤ 41.5	≤ $1.87*10^{-5}$	200	≤ 2400
Bottom Shelf	20B	21.0	≤ 41.5	≤ $1.87*10^{-5}$	200	≤ 2400

I-125 Decay in Storage Room						
Location	Wipe Number	Wipe cpm	Wipe dpm/ 100 cm^2	Wipe $\mu Ci/100\ cm^2$	Survey Meter cpm	Survey Meter dpm/100 cm^2
Bottom Shelf	21B	25.0	≤ 41.5	≤ $1.87*10^{-5}$	200	≤ 2400
Bottom Shelf	22B	21.0	≤ 41.5	≤ $1.87*10^{-5}$	200	≤ 2400
Bottom Shelf	23B	27.0	≤ 41.5	≤ $1.87*10^{-5}$	200	≤ 2400
Bottom Shelf	24B	30.9	≤ 41.5	≤ $1.87*10^{-5}$	200	≤ 2400
Bottom Shelf	25B	32.0	≤ 41.5	≤ $1.87*10^{-5}$	200	≤ 2400
Bottom Shelf	26B	31.0	≤ 41.5	≤ $1.87*10^{-5}$	200	≤ 2400
Bottom Shelf	27B	29.0	≤ 41.5	≤ $1.87*10^{-5}$	200	≤ 2400
Bottom Shelf	28B	20.7	≤ 41.5	≤ $1.87*10^{-5}$	200	≤ 2400
Bottom Shelf	29B	23.7	≤ 41.5	≤ $1.87*10^{-5}$	200	≤ 2400
Bottom Shelf	30B	23.0	≤ 41.5	≤ $1.87*10^{-5}$	200	≤ 2400
Bottom Shelf	31B	30.7	≤ 41.5	≤ $1.87*10^{-5}$	200	≤ 2400
Bottom Shelf	32B	13.0	≤ 41.5	≤ $1.87*10^{-5}$	200	≤ 2400
Bottom Shelf	33B	24.7	≤ 41.5	≤ $1.87*10^{-5}$	200	≤ 2400
Bottom Shelf	34B	35.7	≤ 41.5	≤ $1.87*10^{-5}$	200	≤ 2400
Bottom Shelf	35B	35.0	≤ 41.5	≤ $1.87*10^{-5}$	200	≤ 2400
Bottom Shelf	36B	22.0	≤ 41.5	≤ $1.87*10^{-5}$	200	≤ 2400
Bottom Shelf	37B	24.0	≤ 41.5	≤ $1.87*10^{-5}$	200	≤ 2400
Top Shelf	38B	25.0	≤ 41.5	≤ $1.87*10^{-5}$	200	≤ 2400
Top Shelf	39B	25.0	≤ 41.5	≤ $1.87*10^{-5}$	200	≤ 2400
Top Shelf	40B	24.7	≤ 41.5	≤ $1.87*10^{-5}$	200	≤ 2400

I-125 Decay in Storage Room						
Location	Wipe Number	Wipe cpm	Wipe dpm/ 100 cm^2	Wipe $\mu Ci/100\ cm^2$	Survey Meter cpm	Survey Meter dpm/100 cm^2
Top Shelf	41B	19.0	≤ 41.5	≤ $1.87*10^{-5}$	200	≤ 2400
Top Shelf	42B	26.0	≤ 41.5	≤ $1.87*10^{-5}$	200	≤ 2400
Top Shelf	43B	28.0	≤ 41.5	≤ $1.87*10^{-5}$	100	≤ 2400
Top Shelf	44B	22.0	≤ 41.5	≤ $1.87*10^{-5}$	200	≤ 2400
Top Shelf	45B	28.4	≤ 41.5	≤ $1.87*10^{-5}$	100	≤ 2400
Top Shelf	46B	41.0	≤ 41.5	≤ $1.87*10^{-5}$	200	≤ 2400
Top Shelf	47B	27.0	≤ 41.5	≤ $1.87*10^{-5}$	200	≤ 2400
Top Shelf	48B	27.7	≤ 41.5	≤ $1.87*10^{-5}$	100	≤ 2400
Top Shelf	49B	25.0	≤ 41.5	≤ $1.87*10^{-5}$	200	≤ 2400
Top Shelf	50B	27.7	≤ 41.5	≤ $1.87*10^{-5}$	100	≤ 2400
Top Shelf	51B	40.0	≤ 41.5	≤ $1.87*10^{-5}$	200	≤ 2400
Top Shelf	52B	34.0	≤ 41.5	≤ $1.87*10^{-5}$	100	≤ 2400
Top Shelf	53B	27.0	≤ 41.5	≤ $1.87*10^{-5}$	200	≤ 2400
Top Shelf	54B	27.4	≤ 41.5	≤ $1.87*10^{-5}$	100	≤ 2400
Top Shelf	55B	27.7	≤ 41.5	≤ $1.87*10^{-5}$	100	≤ 2400
Top Shelf	56B	30.7	≤ 41.5	≤ $1.87*10^{-5}$	100	≤ 2400
Top Shelf	57B	30.0	≤ 41.5	≤ $1.87*10^{-5}$	100	≤ 2400
Top Shelf	58B	23.7	≤ 41.5	≤ $1.87*10^{-5}$	200	≤ 2400
Top Shelf	59B	25.4	≤ 41.5	≤ $1.87*10^{-5}$	100	≤ 2400
Top Shelf	60B	29.0	≤ 41.5	≤ $1.87*10^{-5}$	200	≤ 2400

I-125 Decay in Storage Room						
Location	Wipe Number	Wipe cpm	Wipe dpm/ 100 cm^2	Wipe µCi/100 cm^2	Survey Meter cpm	Survey Meter dpm/100 cm^2
Top Shelf	61B	33.7	≤ 41.5	≤ $1.87*10^{-5}$	100	≤ 2400
Top Shelf	62B	34.0	≤ 41.5	≤ $1.87*10^{-5}$	100	≤ 2400
Top Shelf	63B	29.0	≤ 41.5	≤ $1.87*10^{-5}$	100	≤ 2400
Right Wall	64B	28.0	≤ 41.5	≤ $1.87*10^{-5}$	200	≤ 2400
Right Wall	65B	29.0	≤ 41.5	≤ $1.87*10^{-5}$	200	≤ 2400
Right Wall	66B	20.0	≤ 41.5	≤ $1.87*10^{-5}$	200	≤ 2400
Right Wall	67B	27.0	≤ 41.5	≤ $1.87*10^{-5}$	200	≤ 2400
Right Wall	68B	25.7	≤ 41.5	≤ $1.87*10^{-5}$	200	≤ 2400
Right Wall	69B	33.0	≤ 41.5	≤ $1.87*10^{-5}$	200	≤ 2400
Right Wall	70B	24.0	≤ 41.5	≤ $1.87*10^{-5}$	200	≤ 2400
Right Wall	71B	30.0	≤ 41.5	≤ $1.87*10^{-5}$	200	≤ 2400
Right Wall	72B	27.0	≤ 41.5	≤ $1.87*10^{-5}$	200	≤ 2400
Right Wall	73B	17.0	≤ 41.5	≤ $1.87*10^{-5}$	200	≤ 2400
Right Wall	74B	32.0	≤ 41.5	≤ $1.87*10^{-5}$	200	≤ 2400
Right Wall	75B	24.0	≤ 41.5	≤ $1.87*10^{-5}$	200	≤ 2400
Right Wall	76B	29.0	≤ 41.5	≤ $1.87*10^{-5}$	200	≤ 2400
Right Wall	77B	30.0	≤ 41.5	≤ $1.87*10^{-5}$	200	≤ 2400
Right Wall	78B	31.7	≤ 41.5	≤ $1.87*10^{-5}$	200	≤ 2400
Right Wall	79B	27.0	≤ 41.5	≤ $1.87*10^{-5}$	200	≤ 2400
Right Wall	80B	37.8	≤ 41.5	≤ $1.87*10^{-5}$	200	≤ 2400

I-125 Decay in Storage Room						
Location	Wipe Number	Wipe cpm	Wipe dpm/ 100 cm^2	Wipe µCi/100 cm^2	Survey Meter cpm	Survey Meter dpm/100 cm^2
Right Wall	81B	26.0	≤ 41.5	≤ $1.87*10^{-5}$	200	≤ 2400
Right Wall	82B	41.8	≤ 41.5	≤ $1.87*10^{-5}$	200	≤ 2400
Right Wall	83B	24.0	≤ 41.5	≤ $1.87*10^{-5}$	100	≤ 2400
Right Wall	84B	33.0	≤ 41.5	≤ $1.87*10^{-5}$	200	≤ 2400
Right Wall	85B	35.8	≤ 41.5	≤ $1.87*10^{-5}$	100	≤ 2400
Right Wall	86B	23.0	≤ 41.5	≤ $1.87*10^{-5}$	200	≤ 2400
Right Wall	87B	34.7	≤ 41.5	≤ $1.87*10^{-5}$	200	≤ 2400
Right Wall	88B	16.0	≤ 41.5	≤ $1.87*10^{-5}$	200	≤ 2400
Right Wall	89B	27.0	≤ 41.5	≤ $1.87*10^{-5}$	200	≤ 2400
Right Wall	90B	29.0	≤ 41.5	≤ $1.87*10^{-5}$	200	≤ 2400
Right Wall	91B	23.0	≤ 41.5	≤ $1.87*10^{-5}$	200	≤ 2400
Right Wall	92B	33.0	≤ 41.5	≤ $1.87*10^{-5}$	200	≤ 2400
Right Wall	93B	18.0	≤ 41.5	≤ $1.87*10^{-5}$	200	≤ 2400
Right Wall	94B	25.0	≤ 41.5	≤ $1.87*10^{-5}$	200	≤ 2400
Right Wall	95B	30.0	≤ 41.5	≤ $1.87*10^{-5}$	200	≤ 2400
Right Wall	96B	22.7	≤ 41.5	≤ $1.87*10^{-5}$	200	≤ 2400
Right Wall	97B	18.7	≤ 41.5	≤ $1.87*10^{-5}$	200	≤ 2400
Right Wall	98B	26.0	≤ 41.5	≤ $1.87*10^{-5}$	200	≤ 2400
Left Wall	99B	28.0	≤ 41.5	≤ $1.87*10^{-5}$	100	≤ 2400
Left Wall	100B	22.0	≤ 41.5	≤ $1.87*10^{-5}$	200	≤ 2400

R. M. Wester and Associates, Inc.
Quest Survey

I-125 Decay in Storage Room						
Location	Wipe Number	Wipe cpm	Wipe dpm/ 100 cm^2	Wipe µCi/100 cm^2	Survey Meter cpm	Survey Meter dpm/100 cm^2
Left Wall	101B	23.7	≤ 41.5	≤ $1.87*10^{-5}$	100	≤ 2400
Left Wall	102B	35.7	≤ 41.5	≤ $1.87*10^{-5}$	100	≤ 2400
Left Wall	103B	29.0	≤ 41.5	≤ $1.87*10^{-5}$	200	≤ 2400
Left Wall	104B	21.0	≤ 41.5	≤ $1.87*10^{-5}$	100	≤ 2400
Left Wall	105B	18.0	≤ 41.5	≤ $1.87*10^{-5}$	100	≤ 2400
Left Wall	106B	27.0	≤ 41.5	≤ $1.87*10^{-5}$	200	≤ 2400
Left Wall	107B	33.0	≤ 41.5	≤ $1.87*10^{-5}$	100	≤ 2400
Left Wall	108B	19.0	≤ 41.5	≤ $1.87*10^{-5}$	100	≤ 2400
Left Wall	109B	25.5	≤ 41.5	≤ $1.87*10^{-5}$	100	≤ 2400
Left Wall	110B	20.0	≤ 41.5	≤ $1.87*10^{-5}$	100	≤ 2400
Left Wall	111B	24.0	≤ 41.5	≤ $1.87*10^{-5}$	100	≤ 2400
Left Wall	112B	21.5	≤ 41.5	≤ $1.87*10^{-5}$	100	≤ 2400
Left Wall	113B	20.7	≤ 41.5	≤ $1.87*10^{-5}$	100	≤ 2400
Left Wall	114B	34.0	≤ 41.5	≤ $1.87*10^{-5}$	100	≤ 2400
Left Wall	115B	27.8	≤ 41.5	≤ $1.87*10^{-5}$	100	≤ 2400
Left Wall	116B	19.0	≤ 41.5	≤ $1.87*10^{-5}$	100	≤ 2400
Left Wall	117B	20.0	≤ 41.5	≤ $1.87*10^{-5}$	100	≤ 2400
Left Wall	118B	36.0	≤ 41.5	≤ $1.87*10^{-5}$	200	≤ 2400
Left Wall	119B	26.0	≤ 41.5	≤ $1.87*10^{-5}$	100	≤ 2400
Left Wall	120B	26.8	≤ 41.5	≤ $1.87*10^{-5}$	200	≤ 2400

I-125 Decay in Storage Room						
Location	Wipe Number	Wipe cpm	Wipe dpm/ 100 cm^2	Wipe µCi/100 cm^2	Survey Meter cpm	Survey Meter dpm/100 cm^2
Left Wall	121B	29.5	≤ 41.5	≤ $1.87*10^{-5}$	200	≤ 2400
Left Wall	122B	22.0	≤ 41.5	≤ $1.87*10^{-5}$	100	≤ 2400
Left Wall	123B	25.0	≤ 41.5	≤ $1.87*10^{-5}$	100	≤ 2400
Left Wall	124B	31.0	≤ 41.5	≤ $1.87*10^{-5}$	100	≤ 2400
Left Wall	125B	17.7	≤ 41.5	≤ $1.87*10^{-5}$	100	≤ 2400
Left Wall	126B	27.0	≤ 41.5	≤ $1.87*10^{-5}$	200	≤ 2400
Left Wall	127B	25.7	≤ 41.5	≤ $1.87*10^{-5}$	100	≤ 2400
Left Wall	128B	26.8	≤ 41.5	≤ $1.87*10^{-5}$	100	≤ 2400
Left Wall	129B	37.0	≤ 41.5	≤ $1.87*10^{-5}$	100	≤ 2400
Left Wall	130B	28.0	≤ 41.5	≤ $1.87*10^{-5}$	100	≤ 2400
Left Wall	131B	25.0	≤ 41.5	≤ $1.87*10^{-5}$	200	≤ 2400
Left Wall	132B	20.0	≤ 41.5	≤ $1.87*10^{-5}$	200	≤ 2400
Left Wall	133B	24.7	≤ 41.5	≤ $1.87*10^{-5}$	200	≤ 2400
Rear Wall	134B	26.8	≤ 41.5	≤ $1.87*10^{-5}$	200	≤ 2400
Rear Wall	135B	28.8	≤ 41.5	≤ $1.87*10^{-5}$	200	≤ 2400
Rear Wall	136B	18.0	≤ 41.5	≤ $1.87*10^{-5}$	200	≤ 2400
Rear Wall	137B	20.0	≤ 41.5	≤ $1.87*10^{-5}$	200	≤ 2400
Rear Wall	138B	28.8	≤ 41.5	≤ $1.87*10^{-5}$	200	≤ 2400
Rear Wall	139B	23.8	≤ 41.5	≤ $1.87*10^{-5}$	200	≤ 2400
Rear Wall	140B	26.8	≤ 41.5	≤ $1.87*10^{-5}$	200	≤ 2400

I-125 Decay in Storage Room						
Location	Wipe Number	Wipe cpm	Wipe dpm/ 100 cm^2	Wipe µCi/100 cm^2	Survey Meter cpm	Survey Meter dpm/100 cm^2
Rear Wall	141B	18.7	≤ 41.5	≤ $1.87*10^{-5}$	200	≤ 2400
Rear Wall	142B	16.0	≤ 41.5	≤ $1.87*10^{-5}$	200	≤ 2400
Rear Wall	143B	31.0	≤ 41.5	≤ $1.87*10^{-5}$	200	≤ 2400
Rear Wall	144B	25.8	≤ 41.5	≤ $1.87*10^{-5}$	200	≤ 2400
Rear Wall	145B	24.0	≤ 41.5	≤ $1.87*10^{-5}$	200	≤ 2400
Rear Wall	146B	35.0	≤ 41.5	≤ $1.87*10^{-5}$	200	≤ 2400
Rear Wall	147B	38.5	≤ 41.5	≤ $1.87*10^{-5}$	200	≤ 2400
Rear Wall	148B	23.0	≤ 41.5	≤ $1.87*10^{-5}$	200	≤ 2400
Rear Wall	149B	26.0	≤ 41.5	≤ $1.87*10^{-5}$	200	≤ 2400
Rear Wall	150B	26.0	≤ 41.5	≤ $1.87*10^{-5}$	200	≤ 2400
Rear Wall	151B	28.5	≤ 41.5	≤ $1.87*10^{-5}$	200	≤ 2400
Rear Wall	152B	26.0	≤ 41.5	≤ $1.87*10^{-5}$	200	≤ 2400
Rear Wall	153B	25.0	≤ 41.5	≤ $1.87*10^{-5}$	200	≤ 2400
Rear Wall	154B	33.0	≤ 41.5	≤ $1.87*10^{-5}$	200	≤ 2400
Rear Wall	155B	30.8	≤ 41.5	≤ $1.87*10^{-5}$	200	≤ 2400
Rear Wall	156B	17.5	≤ 41.5	≤ $1.87*10^{-5}$	200	≤ 2400
Rear Wall	157B	29.0	≤ 41.5	≤ $1.87*10^{-5}$	200	≤ 2400
Rear Wall	158B	25.0	≤ 41.5	≤ $1.87*10^{-5}$	200	≤ 2400
Door	159B	22.7	≤ 41.5	≤ $1.87*10^{-5}$	200	≤ 2400
Door	160B	38.7	≤ 41.5	≤ $1.87*10^{-5}$	200	≤ 2400

R. M. Wester and Associates, Inc.
Quest Survey

I-125 Decay in Storage Room						
Location	Wipe Number	Wipe cpm	Wipe dpm/ 100 cm^2	Wipe µCi/100 cm^2	Survey Meter cpm	Survey Meter dpm/100 cm^2
Door	161B	21.5	≤ 41.5	≤ $1.87*10^{-5}$	200	≤ 2400
Front Wall	162B	28.0	≤ 41.5	≤ $1.87*10^{-5}$	200	≤ 2400
Front Wall	163B	23.0	≤ 41.5	≤ $1.87*10^{-5}$	200	≤ 2400
Front Wall	164B	30.7	≤ 41.5	≤ $1.87*10^{-5}$	200	≤ 2400
Front Wall	165B	25.0	≤ 41.5	≤ $1.87*10^{-5}$	200	≤ 2400
Front Wall	166B	22.0	≤ 41.5	≤ $1.87*10^{-5}$	200	≤ 2400
Front Wall	167B	27.0	≤ 41.5	≤ $1.87*10^{-5}$	200	≤ 2400
Front Wall	168B	35.0	≤ 41.5	≤ $1.87*10^{-5}$	200	≤ 2400
Front Wall	169B	35.0	≤ 41.5	≤ $1.87*10^{-5}$	200	≤ 2400
Front Wall	170B	27.7	≤ 41.5	≤ $1.87*10^{-5}$	200	≤ 2400
Front Wall	171B	29.0	≤ 41.5	≤ $1.87*10^{-5}$	200	≤ 2400
Front Wall	172B	34.0	≤ 41.5	≤ $1.87*10^{-5}$	200	≤ 2400
Front Wall	173B	24.7	≤ 41.5	≤ $1.87*10^{-5}$	200	≤ 2400
Front Wall	174B	28.7	≤ 41.5	≤ $1.87*10^{-5}$	200	≤ 2400
Front Wall	175B	28.0	≤ 41.5	≤ $1.87*10^{-5}$	200	≤ 2400
Front Wall	176B	28.0	≤ 41.5	≤ $1.87*10^{-5}$	200	≤ 2400
Front Wall	177B	24.0	≤ 41.5	≤ $1.87*10^{-5}$	200	≤ 2400
Front Wall	178B	37.0	≤ 41.5	≤ $1.87*10^{-5}$	200	≤ 2400
Front Wall	179B	27.0	≤ 41.5	≤ $1.87*10^{-5}$	200	≤ 2400
Front Wall	180B	26.0	≤ 41.5	≤ $1.87*10^{-5}$	200	≤ 2400

I-125 Decay in Storage Room						
Location	Wipe Number	Wipe cpm	Wipe dpm/ 100 cm^2	Wipe µCi/100 cm^2	Survey Meter cpm	Survey Meter dpm/100 cm^2
Front Wall	181B	29.0	≤ 41.5	≤ $1.87*10^{-5}$	200	≤ 2400
Front Wall	182B	32.7	≤ 41.5	≤ $1.87*10^{-5}$	200	≤ 2400
Front Wall	183B	36.7	≤ 41.5	≤ $1.87*10^{-5}$	200	≤ 2400

Perkin Elmer Wizard 3" Gamma Counter (serial number 4800614, calibration checked daily)

I-129 Standard:	113220 dpm
Efficiency Check:	83381.4 cpm
Background:	35.8 cpm
Efficiency:	73.6%
Run time:	1 minute
Minimum Detectable Activity:	41.5 dpm, $1.87*10^{-5}$ µCi

Ludlum Model 3 Survey Meter (serial number 109117, calibrated May 7, 2008)

Ludlum Model 44-3 Probe:	SN: PR071278
Background:	200 cpm
I-129 Standard:	207792 dpm
Efficiency Check:	53720 cpm
Efficiency:	25.8%
Minimum Detectable Activity:	2400 dpm/100 cm^2, 0.011 µCi/100 cm^2

I-125 Decay in Storage Room

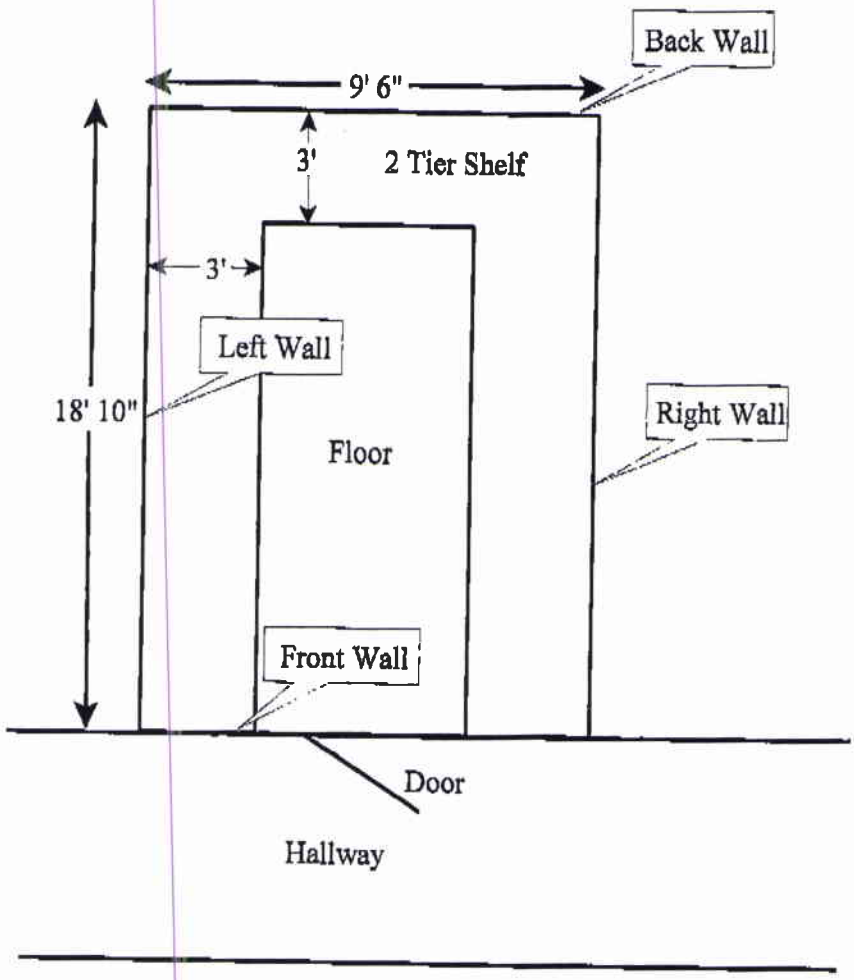

The Walls are 10' 2" tall and the top shelf is 4' 10" from the floor.

Floor, Hallway, and Bottom Shelf

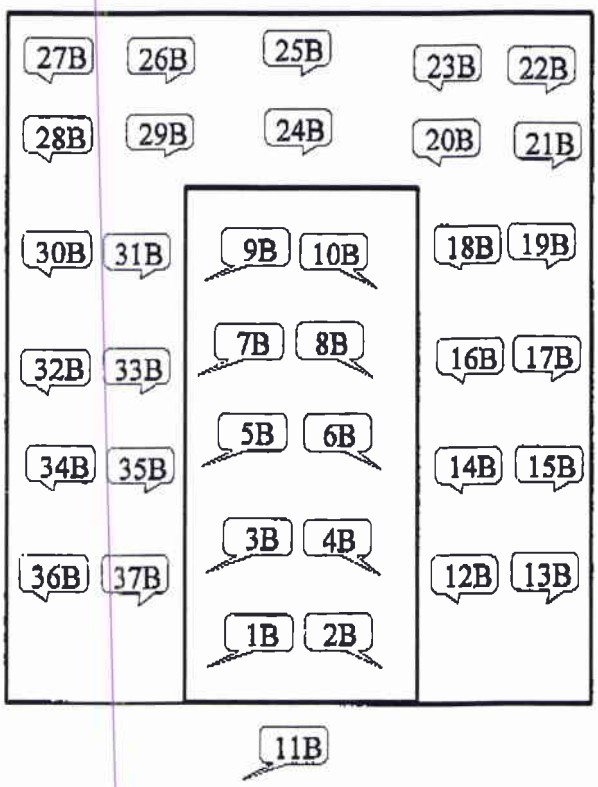

Top Shelf

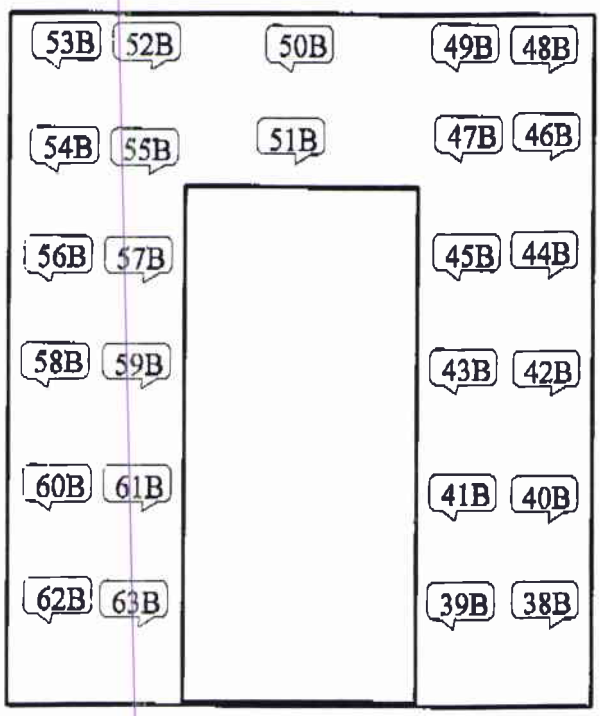
53B
52B
50B
49B
48B
54B
55B
51B
47B
46B
56B
57B
45B
44B
58B
59B
43B
42B
60B
61B
41B
40B
62B
63B
39B
38B

Right Wall

Top Shelf

98B	95B	92B	89B	86B	83B	80B
97B	94B	91B	88B	85B	82B	79B
96B	93B	90B	87B	84B	81B	78B
77B	75B	73B	71B	69B	67B	65B
76B	74B	72B	70B	68B	66B	64B

Left Wall

Top Shelf

133B	130B	127B	124B	121B	118B	115B
132B	129B	126B	123B	120B	117B	114B
131B	128B	125B	122B	119B	116B	113B
112B	110B	108B	106B	104B	102B	100B
111B	109B	107B	105B	103B	101B	99B

Rear Wall

Top Shelf

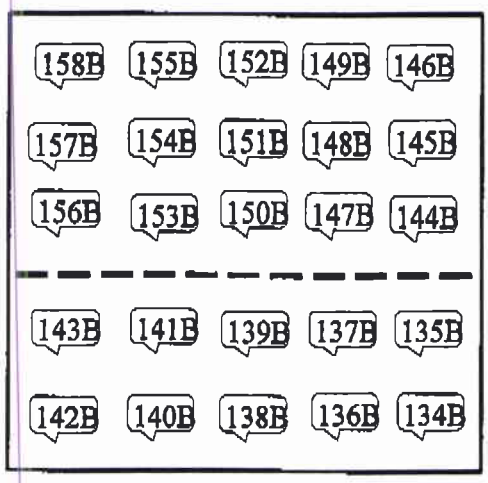

Front Wall

Top Shelf

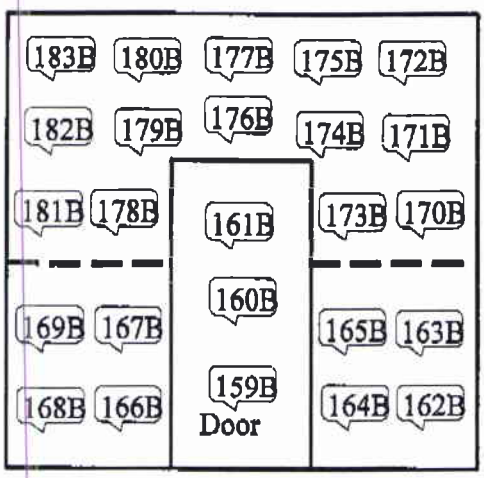

R. M. Wester and Associates, Inc.
Quest Survey

Loading Dock						
Location	Wipe Number	Wipe cpm	Wipe dpm/ 100 cm^2	Wipe µCi/100 cm^2	Survey Meter cpm	Survey Meter dpm/100 cm^2
Loading Dock	1D	23.2	≤ 37.5	≤ $1.69*10^{-5}$	≤ 200	≤ 2400
Loading Dock	2D	30.0	≤ 37.5	≤ $1.69*10^{-5}$	≤ 200	≤ 2400
Loading Dock	3D	29.0	≤ 37.5	≤ $1.69*10^{-5}$	≤ 200	≤ 2400
Loading Dock	4D	32.0	≤ 37.5	≤ $1.69*10^{-5}$	≤ 200	≤ 2400
Loading Dock	5D	30.5	≤ 37.5	≤ $1.69*10^{-5}$	≤ 200	≤ 2400
Loading Dock	6D	35.4	≤ 37.5	≤ $1.69*10^{-5}$	≤ 200	≤ 2400
Loading Dock	7D	34.0	≤ 37.5	≤ $1.69*10^{-5}$	≤ 200	≤ 2400
Loading Dock	8D	29.7	≤ 37.5	≤ $1.69*10^{-5}$	≤ 200	≤ 2400
Loading Dock	9D	32.0	≤ 37.5	≤ $1.69*10^{-5}$	≤ 200	≤ 2400
Loading Dock	10D	25.0	≤ 37.5	≤ $1.69*10^{-5}$	≤ 200	≤ 2400
Loading Dock	11D	34.0	≤ 37.5	≤ $1.69*10^{-5}$	≤ 200	≤ 2400
Loading Dock	12D	29.4	≤ 37.5	≤ $1.69*10^{-5}$	≤ 200	≤ 2400
Loading Dock	13D	40.0	≤ 37.5	≤ $1.69*10^{-5}$	≤ 200	≤ 2400
Loading Dock	14D	30.7	≤ 37.5	≤ $1.69*10^{-5}$	≤ 200	≤ 2400
Loading Dock	15D	26.0	≤ 37.5	≤ $1.69*10^{-5}$	≤ 200	≤ 2400
Loading Dock	16D	38.0	≤ 37.5	≤ $1.69*10^{-5}$	≤ 200	≤ 2400
Loading Dock	17D	29.7	≤ 37.5	≤ $1.69*10^{-5}$	≤ 200	≤ 2400
Loading Dock	18D	31.0	≤ 37.5	≤ $1.69*10^{-5}$	≤ 200	≤ 2400
Loading Dock	19D	33.7	≤ 37.5	≤ $1.69*10^{-5}$	≤ 200	≤ 2400
Loading Dock	20D	38.0	≤ 37.5	≤ $1.69*10^{-5}$	≤ 200	≤ 2400

R. M. Wester and Associates, Inc.
Quest Survey Page 2D

Hallway from I-125 Decay in Storage Room to Loading Dock						
Location	Wipe Number	Wipe cpm	Wipe dpm/ 100 cm^2	Wipe µCi/100 cm^2	Survey Meter cpm	Survey Meter dpm/100 cm^2
Loading Dock	21D	39.0	≤ 37.5	≤ 1.69*10^{-5}	≤ 200	≤ 2400
Loading Dock	22D	25.0	≤ 37.5	≤ 1.69*10^{-5}	≤ 200	≤ 2400
Loading Dock	23D	26.0	≤ 37.5	≤ 1.69*10^{-5}	≤ 200	≤ 2400
Loading Dock	24D	32.0	≤ 37.5	≤ 1.69*10^{-5}	≤ 200	≤ 2400
Loading Dock	25D	30.7	≤ 37.5	≤ 1.69*10^{-5}	≤ 200	≤ 2400
Loading Dock	26D	30.7	≤ 37.5	≤ 1.69*10^{-5}	≤ 200	≤ 2400
Loading Dock	27D	34.0	≤ 37.5	≤ 1.69*10^{-5}	≤ 200	≤ 2400
Loading Dock	28D	34.0	≤ 37.5	≤ 1.69*10^{-5}	≤ 200	≤ 2400
Loading Dock	29D	34.0	≤ 37.5	≤ 1.69*10^{-5}	≤ 200	≤ 2400
Loading Dock	30D	30.0	≤ 37.5	≤ 1.69*10^{-5}	≤ 200	≤ 2400
Loading Dock	31D	36.0	≤ 37.5	≤ 1.69*10^{-5}	≤ 200	≤ 2400
Loading Dock	32D	30.0	≤ 37.5	≤ 1.69*10^{-5}	≤ 200	≤ 2400
Loading Dock	33D	22.0	≤ 37.5	≤ 1.69*10^{-5}	≤ 200	≤ 2400
Loading Dock	34D	34.7	≤ 37.5	≤ 1.69*10^{-5}	≤ 200	≤ 2400
Loading Dock	35D	31.0	≤ 37.5	≤ 1.69*10^{-5}	≤ 200	≤ 2400
Loading Dock	36D	23.7	≤ 37.5	≤ 1.69*10^{-5}	≤ 200	≤ 2400
Loading Dock	37D	22.0	≤ 37.5	≤ 1.69*10^{-5}	≤ 200	≤ 2400
Loading Dock	38D	28.0	≤ 37.5	≤ 1.69*10^{-5}	≤ 200	≤ 2400
Loading Dock	39D	28.0	≤ 37.5	≤ 1.69*10^{-5}	≤ 200	≤ 2400
Loading Dock	40D	30.7	≤ 37.5	≤ 1.69*10^{-5}	≤ 200	≤ 2400

Hallway from I-125 Decay in Storage Room to Loading Dock						
Location	Wipe Number	Wipe cpm	Wipe dpm/ 100 cm^2	Wipe µCi/100 cm^2	Survey Meter cpm	Survey Meter dpm/100 cm^2
Loading Dock	41D	23.2	≤ 37.5	≤ $1.69*10^{-5}$	≤ 200	≤ 2400
Loading Dock	42D	30.7	≤ 37.5	≤ $1.69*10^{-5}$	≤ 200	≤ 2400
Loading Dock	43D	31.0	≤ 37.5	≤ $1.69*10^{-5}$	≤ 200	≤ 2400
Loading Dock	44D	22.0	≤ 37.5	≤ $1.69*10^{-5}$	≤ 200	≤ 2400
Loading Dock	45D	27.0	≤ 37.5	≤ $1.69*10^{-5}$	≤ 200	≤ 2400
Loading Dock	46D	25.7	≤ 37.5	≤ $1.69*10^{-5}$	≤ 200	≤ 2400
Loading Dock	47D	26.0	≤ 37.5	≤ $1.69*10^{-5}$	≤ 200	≤ 2400
Loading Dock	48D	38.0	≤ 37.5	≤ $1.69*10^{-5}$	≤ 200	≤ 2400
Loading Dock	49D	25.0	≤ 37.5	≤ $1.69*10^{-5}$	≤ 200	≤ 2400
Loading Dock	50D	31.7	≤ 37.5	≤ $1.69*10^{-5}$	≤ 200	≤ 2400
Loading Dock	51D	28.2	≤ 37.5	≤ $1.69*10^{-5}$	≤ 200	≤ 2400
Loading Dock	52D	35.0	≤ 37.5	≤ $1.69*10^{-5}$	≤ 200	≤ 2400
Loading Dock	53D	33.5	≤ 37.5	≤ $1.69*10^{-5}$	≤ 200	≤ 2400
Loading Dock	54D	38.8	≤ 37.5	≤ $1.69*10^{-5}$	≤ 200	≤ 2400
Loading Dock	55D	38.0	≤ 37.5	≤ $1.69*10^{-5}$	≤ 200	≤ 2400
Loading Dock	56D	32.0	≤ 37.5	≤ $1.69*10^{-5}$	≤ 200	≤ 2400
Loading Dock	57D	24.0	≤ 37.5	≤ $1.69*10^{-5}$	≤ 200	≤ 2400
Loading Dock	58D	31.5	≤ 37.5	≤ $1.69*10^{-5}$	≤ 200	≤ 2400
Loading Dock	59D	33.5	≤ 37.5	≤ $1.69*10^{-5}$	≤ 200	≤ 2400
Loading Dock	60D	18.0	≤ 37.5	≤ $1.69*10^{-5}$	≤ 200	≤ 2400

Hallway from I-125 Decay in Storage Room to Loading Dock						
Location	Wipe Number	Wipe cpm	Wipe dpm/ 100 cm^2	Wipe $\mu Ci/100\ cm^2$	Survey Meter cpm	Survey Meter dpm/100 cm^2
Loading Dock	61D	28.7	≤ 37.5	≤ $1.69*10^{-5}$	≤ 200	≤ 2400
Loading Dock	62D	29.2	≤ 37.5	≤ $1.69*10^{-5}$	≤ 200	≤ 2400
Loading Dock	63D	29.0	≤ 37.5	≤ $1.69*10^{-5}$	≤ 200	≤ 2400
Loading Dock	64D	22.0	≤ 37.5	≤ $1.69*10^{-5}$	≤ 200	≤ 2400
Loading Dock	65D	30.0	≤ 37.5	≤ $1.69*10^{-5}$	≤ 200	≤ 2400
Loading Dock	66D	28.0	≤ 37.5	≤ $1.69*10^{-5}$	≤ 200	≤ 2400
Loading Dock	67D	31.0	≤ 37.5	≤ $1.69*10^{-5}$	≤ 200	≤ 2400
Loading Dock	68D	29.0	≤ 37.5	≤ $1.69*10^{-5}$	≤ 200	≤ 2400
Loading Dock	69D	20.0	≤ 37.5	≤ $1.69*10^{-5}$	≤ 200	≤ 2400
Loading Dock	70D	20.0	≤ 37.5	≤ $1.69*10^{-5}$	≤ 200	≤ 2400
Loading Dock	71D	31.5	≤ 37.5	≤ $1.69*10^{-5}$	≤ 200	≤ 2400
Loading Dock	72D	31.0	≤ 37.5	≤ $1.69*10^{-5}$	≤ 200	≤ 2400
Loading Dock	73D	34.0	≤ 37.5	≤ $1.69*10^{-5}$	≤ 200	≤ 2400
Loading Dock	74D	39.0	≤ 37.5	≤ $1.69*10^{-5}$	≤ 200	≤ 2400
Loading Dock	75D	37.0	≤ 37.5	≤ $1.69*10^{-5}$	≤ 200	≤ 2400
Loading Dock	76D	41.0	≤ 37.5	≤ $1.69*10^{-5}$	≤ 200	≤ 2400
Loading Dock	77D	18.0	≤ 37.5	≤ $1.69*10^{-5}$	≤ 200	≤ 2400
Loading Dock	78D	23.0	≤ 37.5	≤ $1.69*10^{-5}$	≤ 200	≤ 2400
Loading Dock	79D	30.0	≤ 37.5	≤ $1.69*10^{-5}$	≤ 200	≤ 2400
Loading Dock	80D	27.0	≤ 37.5	≤ $1.69*10^{-5}$	≤ 200	≤ 2400

Hallway from I-125 Decay in Storage Room to Loading Dock						
Location	Wipe	cpm	Net dpm	Net µCi	Survey Meter cpm	Survey Meter dpm
Loading Dock	81D	32.0	≤ 37.5	≤ $1.69*10^{-5}$	≤ 200	≤ 2400
Loading Dock	82D	36.7	≤ 37.5	≤ $1.69*10^{-5}$	≤ 200	≤ 2400
Loading Dock	83D	24.0	≤ 37.5	≤ $1.69*10^{-5}$	≤ 200	≤ 2400
Loading Dock	84D	29.0	≤ 37.5	≤ $1.69*10^{-5}$	≤ 200	≤ 2400
Loading Dock	85D	32.5	≤ 37.5	≤ $1.69*10^{-5}$	≤ 200	≤ 2400
Loading Dock	86D	25.0	≤ 37.5	≤ $1.69*10^{-5}$	≤ 200	≤ 2400
Loading Dock	87D	22.0	≤ 37.5	≤ $1.69*10^{-5}$	≤ 200	≤ 2400
Loading Dock	88D	34.0	≤ 37.5	≤ $1.69*10^{-5}$	≤ 200	≤ 2400
Loading Dock	89D	22.7	≤ 37.5	≤ $1.69*10^{-5}$	≤ 200	≤ 2400
Loading Dock	90D	28.0	≤ 37.5	≤ $1.69*10^{-5}$	≤ 200	≤ 2400
Loading Dock	91D	30.0	≤ 37.5	≤ $1.69*10^{-5}$	≤ 200	≤ 2400
Loading Dock	92D	31.0	≤ 37.5	≤ $1.69*10^{-5}$	≤ 200	≤ 2400
Loading Dock	93D	32.8	≤ 37.5	≤ $1.69*10^{-5}$	≤ 200	≤ 2400
Loading Dock	94D	40.7	≤ 37.5	≤ $1.69*10^{-5}$	≤ 200	≤ 2400
Loading Dock	95D	24.0	≤ 37.5	≤ $1.69*10^{-5}$	≤ 200	≤ 2400
Loading Dock	96D	33.8	≤ 37.5	≤ $1.69*10^{-5}$	≤ 200	≤ 2400
Loading Dock	97D	24.0	≤ 37.5	≤ $1.69*10^{-5}$	≤ 200	≤ 2400
Loading Dock	98D	47.0	≤ 37.5	≤ $1.69*10^{-5}$	≤ 200	≤ 2400
Loading Dock	99D	35.8	≤ 37.5	≤ $1.69*10^{-5}$	≤ 200	≤ 2400
Loading Dock	100D	25.0	≤ 37.5	≤ $1.69*10^{-5}$	≤ 200	≤ 2400

Hallway from I-125 Decay in Storage Room to Loading Dock						
Location	Wipe Number	Wipe cpm	Wipe dpm/ 100 cm^2	Wipe µCi/100 cm^2	Survey Meter cpm	Survey Meter dpm/100 cm^2
Loading Dock	101D	22.7	≤ 37.5	≤ $1.69*10^{-5}$	≤ 200	≤ 2400
Loading Dock	102D	26.0	≤ 37.5	≤ $1.69*10^{-5}$	≤ 200	≤ 2400

Perkin Elmer Wizard 3" Gamma Counter (serial number 4800614, calibration checked daily)

I-129 Standard:	113220 dpm
Efficiency Check:	83533 cpm
Efficiency:	73.8%
Run time:	1 minute
Minimum Detectable Activity:	37.5 dpm, $1.69*10^{-5}$ µCi

Ludlum Model 3 Survey Meter (serial number 109117, calibrated May 7, 2008)

Ludlum Model 44-3 Probe:	SN: PR071278
Background:	200 cpm
I-129 Standard:	207792 dpm
Efficiency Check:	53570 cpm
Efficiency:	25.8%
Minimum Detectable Activity:	2400 dpm/100 cm^2 .0011 µCi/100 cm^2
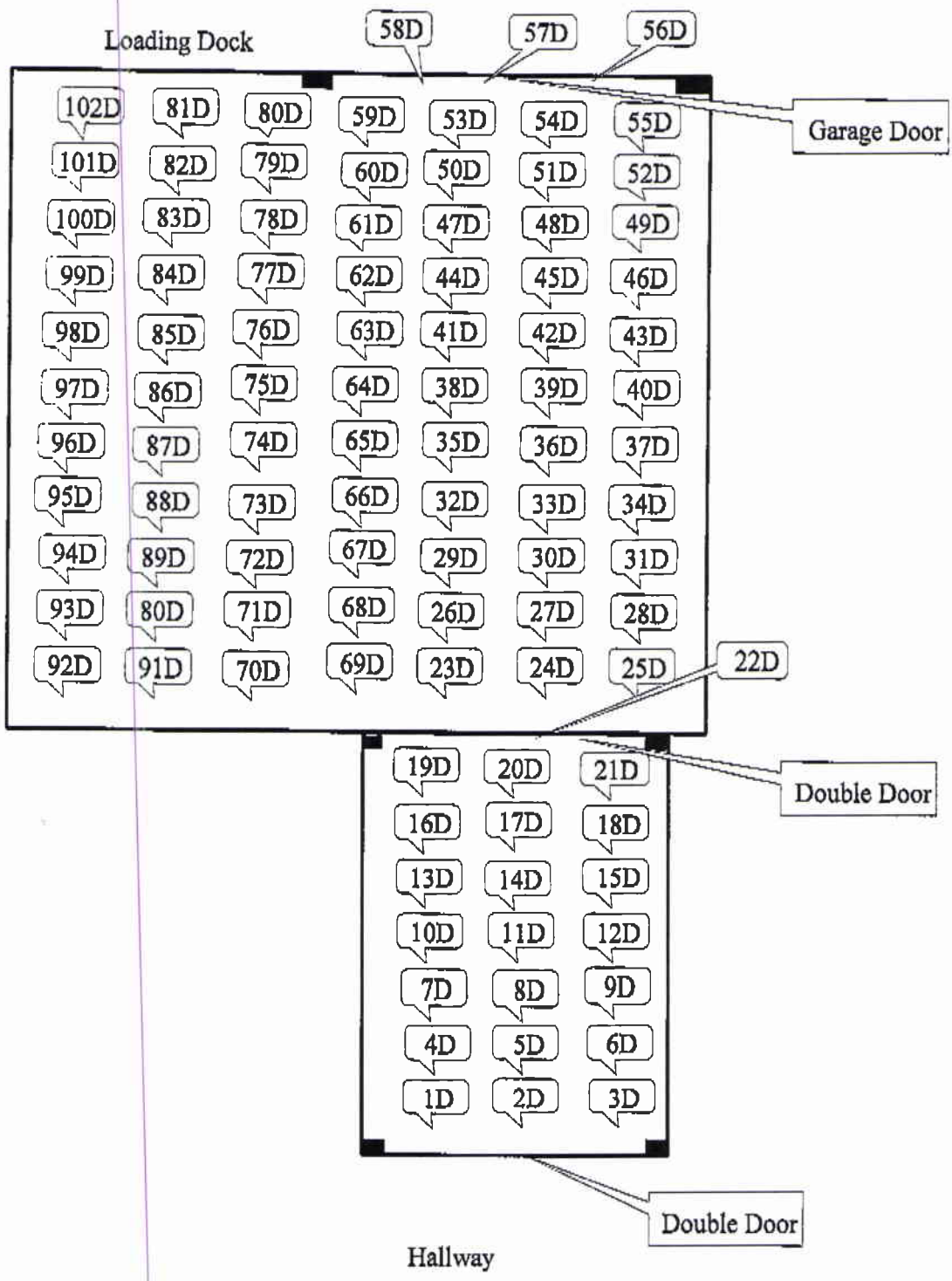
R. M. Wester and Associates, Inc.
Quest Survey