Mitigation of Alloy 600 Dissimilar Metal Welds in Reactor Vessel Primary Nozzles by Inlay

Ron Payne
Engineering Manager II, AREVA NP

NRC RES

July 16, 2008

Outline

- **Design/Process Overview**
- **Inlay Categorization**
- **Code Activity**
  - Analytical Technical Basis
- **Sulfur Mitigation**
- **Surface Stress State**
- **PWROG PDI Equivalency**
  - Causal Analysis
- **Qualification Overview**
- **Additional Information**
  - Qualification Details
  - Tooling Overview

MRP-139 RV Nozzle Configurations

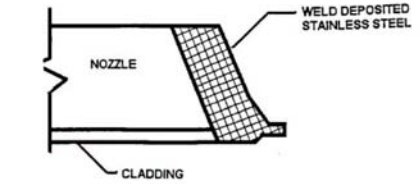

TYPE 1

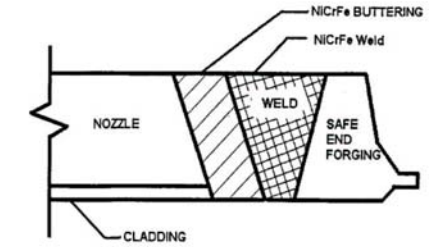

TYPE 3A

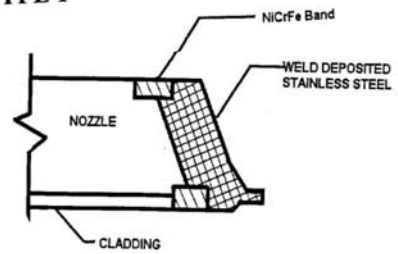

TYPE 1A

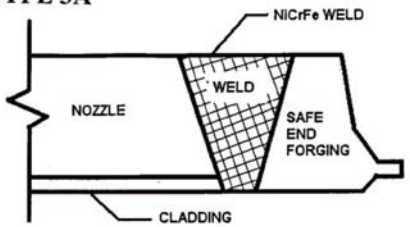

TYPE 3B

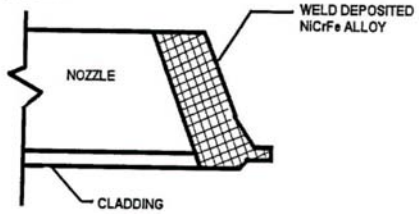

TYPE 2

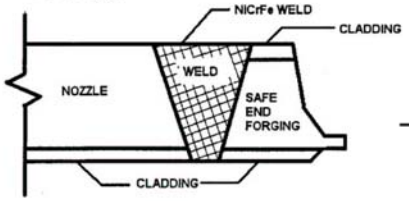

TYPE 3C

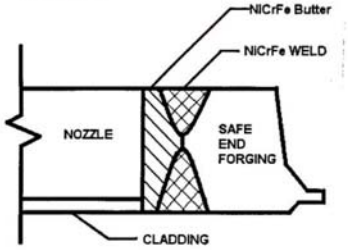

TYPE 3D

Type 3A Weld Geometry is Prevalent 4 Loop A600 DMW Configuration (U.S. Plants)

- 22 units with Type 3A
- 2 units with Type 3B
- 5 units with Type 3C
- 2 units with Type 2

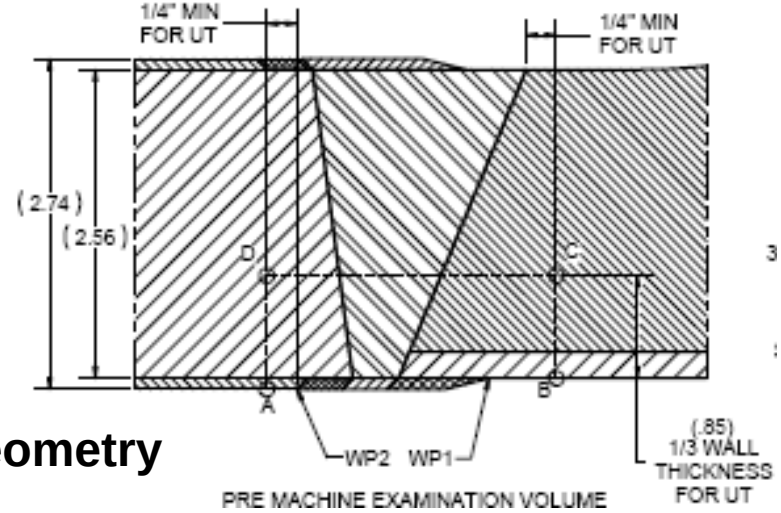

Actual 3C Geometry

PWROG
PWR Owners Group

Mitigation/Repair Design & Process Overview

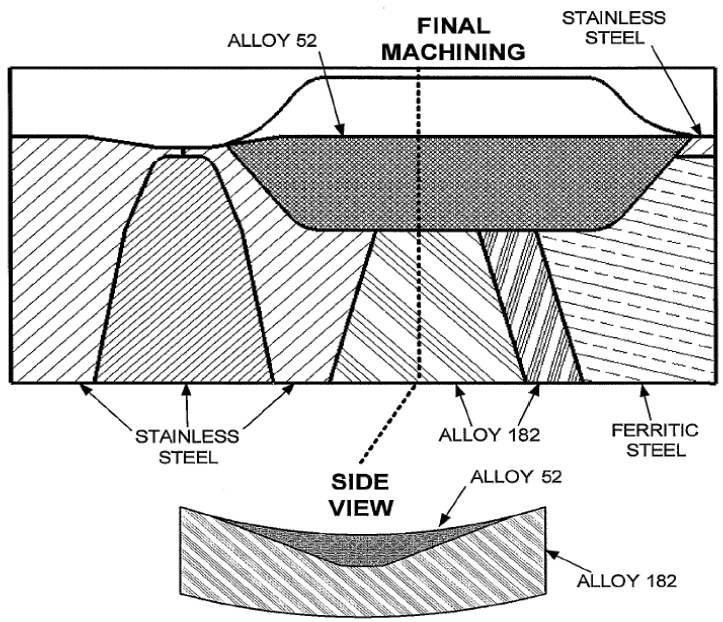

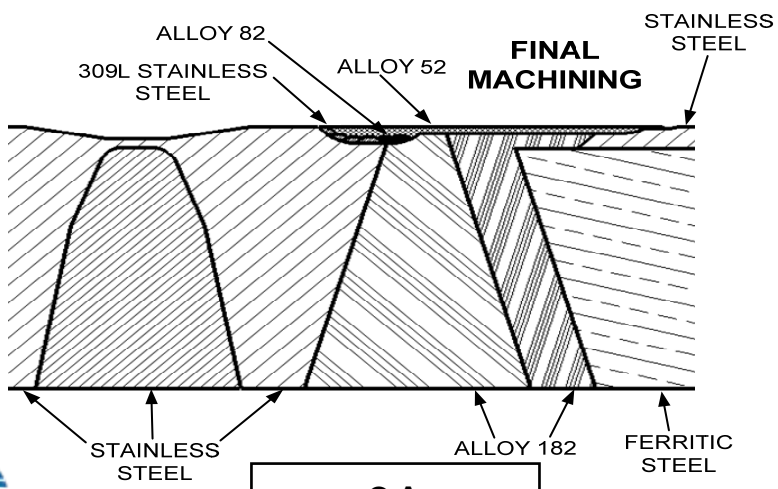

3A Mitigation

- Pre-Mitigation NDE (PDI):
  - Identification and sizing of cracks (UT/ECT)
  - Identification of weld boundaries (ECT)
- Laser Profilometry
- Excavation of weld toe:
  - Removal or reduction of cracks
  - Inlay groove
- Surface NDE (PT)
- Repair, if Req'd (Alloy 82)
- Sulfur Mitigation Layer, if Req'd
  - (309L SST/Alloy 82)
- Inlay (Alloy 52M)
- Final Machining (original profile)
- Final NDE
  - Section III Inlay (UT/PT)

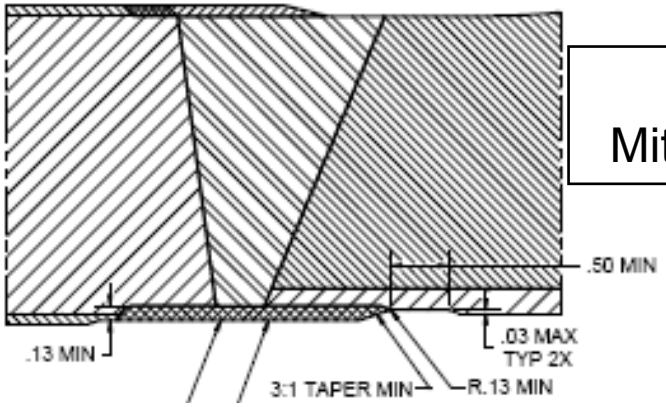

3C Mitigation

Inlay Categorization

- MRP-139 classifies uncracked DMW's mitigated with weld inlay as Category A
  - "Category A weldments have low probability of experiencing PWSCC because they are made of PWSCC-resistant materials or have been inlayed, or clad, with PWSCC-resistant materials assuring that no susceptible material comprises the wetted surface."
- MRP-139 Category A weldments have no increased inspection frequency
  - "Based on the presence of resistant material, Category A welds shall be inspected using the owner's existing ASME Code examination program or approved alternative."
- Both MRP 139 and NUREG 0313 categorize inlaid/CRC welds as Category A, not susceptible to SCC.
- The requirement for multiple mitigation methods does not apply to Category A weldments.

PWROG
PWR Owners Group

Inlay Categorization (Cont'd)

- Standard Review Plan (SRP) (NUREG-0800) 3.6.3 - "The review should evaluate the material susceptibility to corrosion, the potential for high residual stresses, and environmental conditions that could lead to degradation by stress corrosion cracking. Primary water stress corrosion cracking (PWSCC) is considered to be an active degradation mechanism in Alloy 600/82/182 materials in pressurized water reactor plants. Alloy 690/52/152 material is not currently considered susceptible to PWSCC for the purposes of LBB application."

PWROG
PWR Owners Group

Weld Inlay Relief Request

- **The ambient temperature temper bead welding technique will be used on applicable portions of the weld inlay. The following alternatives may be required depending upon the Code Case(s) published, revision levels, and approval conditions contained in RG 1.147.**
  - Volumetric or surface examination of 1-1/2T band would not be performed
    - This has been removed in CC N-638-4
  - 48 hr hold start after the 3rd temper bead layer
    - See N-638-4
  - Thermocouple monitoring and recording of process temperatures would not be performed.
    - Alternatives as shown in latest versions of N-638 or N-740 would be implemented.
  - Use of the PDI Program alternative to Section XI, Appendix VIII, Supplement 10 with potentially other changes per Supplement 14
    - Published in Section XI, 2004 Edition which has not been approved by the NRC

PWROG
PWR Owners Group

Code Case Updates

- Task Group on Dissimilar Weld Inlay
  - Case N-XXX (07-1682) Nickel Alloy Reactor Coolant Inlay and Cladding for Mitigation of PWR Full Penetration Circumferential Nickel Alloy Welds in Class 1 Items
- Task Group on Alloy 600
  - Code Case N-770 (codification of MRP-139)

PWROG
PWR Owners Group

Weld Inlay Code Case N-XXX (07-1682)

- Flaw Growth Analysis is required
- The rules for analyses are defined in the Case
  - The basis document will contain analyses to support an Inlay minimum final thickness of 1/8”
  - The licensee must demonstrate that the bounding analyses in the basis document is applicable for the plant
  - The licensee can perform other analyses to support different applications and/or a different minimum final thickness
- Section III Stress/Fatigue Analysis
  - Qualify the weld inlay repair to Section III, NB-3000 criteria
  - ASME, Section III, 1989 edition with no addenda

PWROG
PWR Owners Group

Section III Stress/Fatigue Analysis

- **Model**
  - 3D with items affected by the inlay or affecting the inlay
- **Loads**
  - Operating temperature and pressure transients
  - Piping loads due to:
    - Dead weight
    - Thermal expansion
    - OBE, DBE and LOCA
- **Analysis**
  - Thermal
  - Stress
  - Result post-processing
    - For ASME Section III qualification
    - For Fracture Mechanics flaw growth
- **ASME Section III Criteria**
  - Primary Stresses
  - Primary plus Secondary Stresses
  - Usage Factor
- **Comparison Study Results**
  - Hoop Stress is one of the major contributors to Stress Intensity Ranges and Usage Factor
  - The only appreciable difference is for the 2" thick inlay
  - Cumulative Usage Factor is very low

Nozzle Stress distribution due to internal pressure and temperature

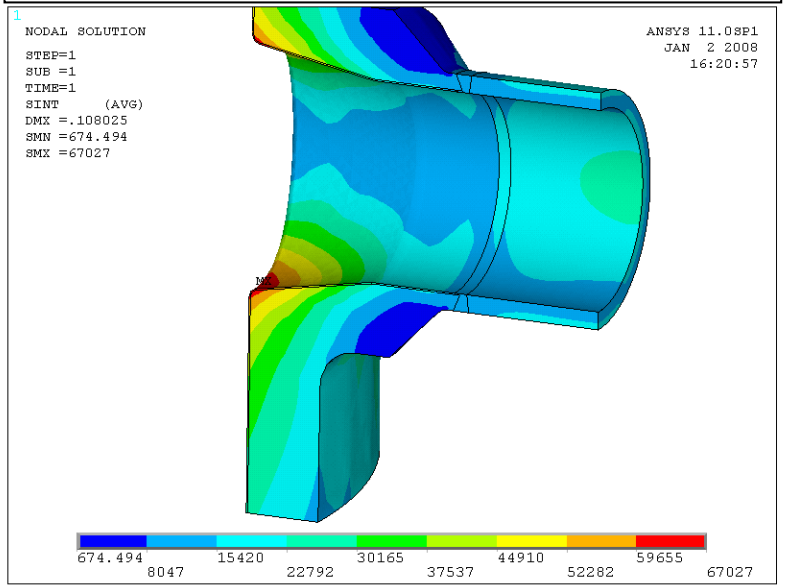

Fracture Mechanics Analysis

- Calculate crack growth of postulated flaws in the Alloy 52 weld inlay and Alloy 82/182 DM weld following the weld inlay repair
- Postulated flaws as defined in technical basis for draft weld inlay Code Case
  - Postulated Weld Inlay Flaw
  - Postulated DMW Flaw
  - Postulated flaws in the DMW and weld inlay do not line up

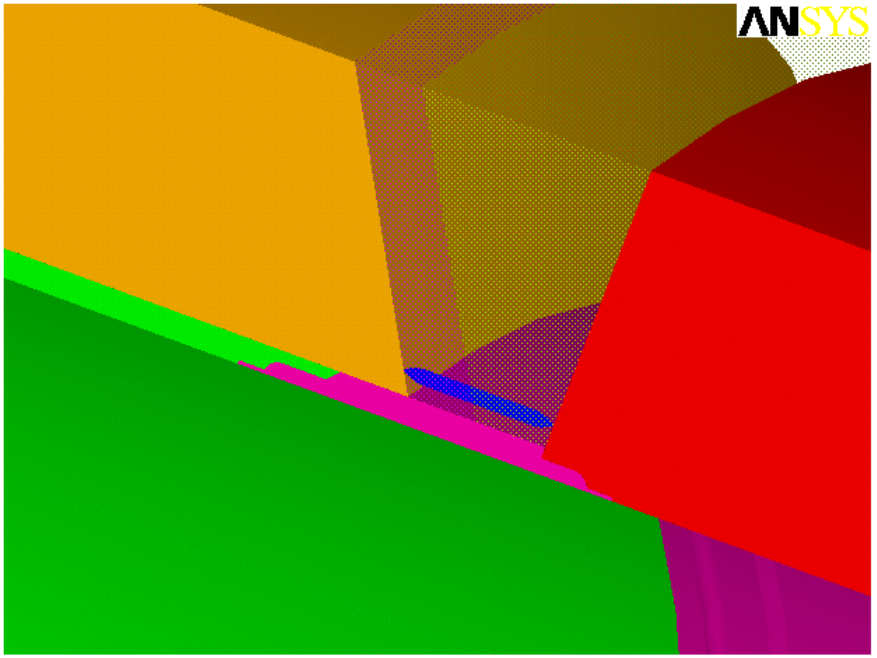

PWROG
PWR Owners Group

Welding Residual Stress Analysis Methodology

- Simulate original weld configuration using multiple weld passes and typical welding input parameters
- Simulate shop weld repair - full circumferential 50% through-wall on ID
- Simulate weld inlay using actual weld parameters
- Apply several cycles of heat up and cool down to obtain a stable state of residual stress after shakedown

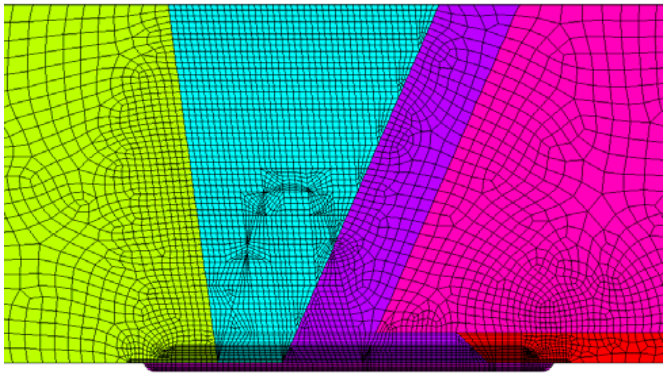

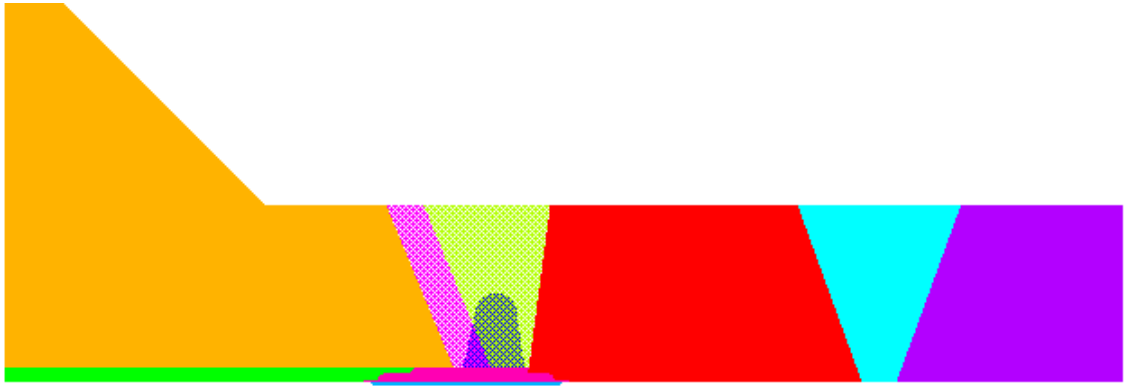

Fracture Mechanics Analysis
- Crack Model

- Postulated DMW Flaw
  - Postulated Flaw: 3/8” deep full circumferential planar flaw in the DMW adjacent to the weld inlay fusion line
  - Postulated Flaw: 3/8” deep axial planar flaw in the DMW adjacent to the weld inlay fusion line for the maximum axial length of the DMW
  - Postulated flaw sizes in the DMW are based on greater than the largest acceptable flaws per Table IWB-3514-2 (.10t)

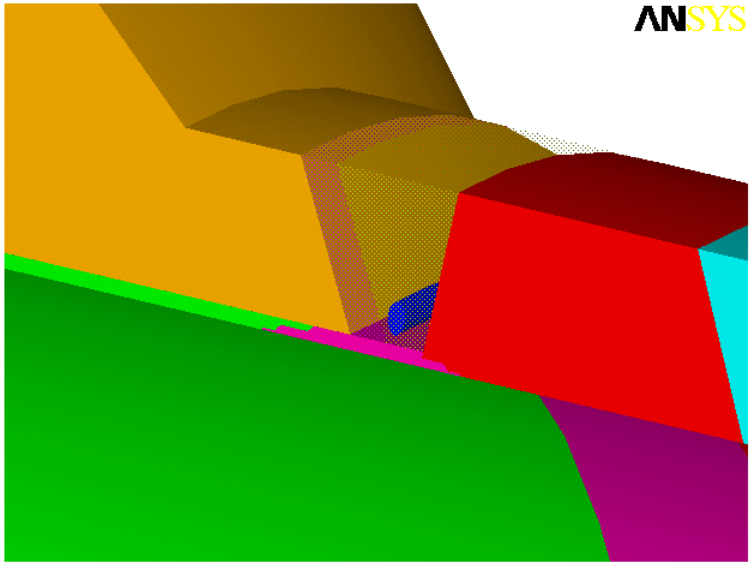

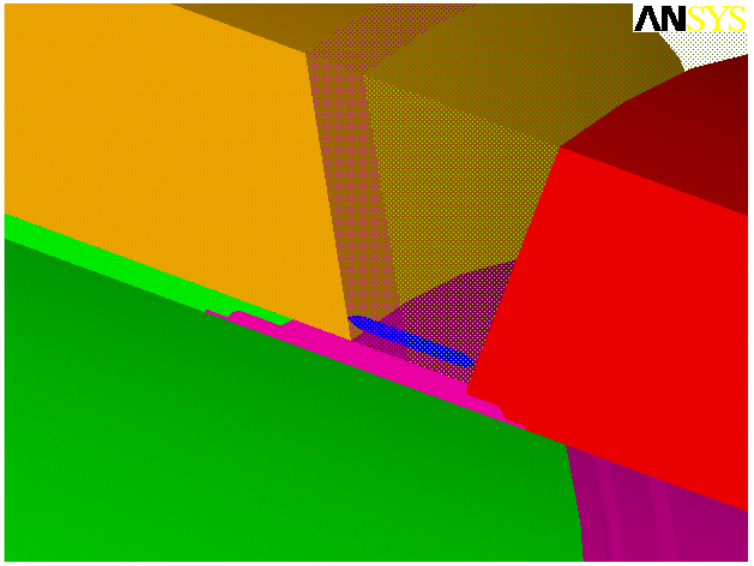

Fracture Mechanics Results

- **Considering Various Transient Condition Scenarios:**
  - Maximum axial stresses from the “reactor trip” scenario
  - Maximum hoop stresses from the “steady state” scenario
  - Considering bounding transients following completion of inlay
- **3 possible paths, the highest stresses on the surface of the inlay:**
  - Axial: 67 ksi
  - Hoop: 49 ksi
- **Negligible flaw growth**
  - A maximum of .007” flaw growth for a worst case surface breaking flaw of .062” (1/2 the inlay thickness) for 60 years.
  - A maximum of .004” flaw growth for 60 years for an embedded flaw at the DMW/inlay interface of 3/8”. This is the maximum flaw size acceptable per ASME Section XI for this weld.
- **This work is being developed as a non-proprietary document to serve as the technical basis for the inlay code case.**
- **Conservative crack growth rates based on NUREG CR-6721 were used.**

PWROG
PWR Owners Group

Weld Inlay Code Case N-XXX (07-1682)

- 2 final layers with 24% minimum chromium content is required
- WPS qualification requirements will be specified in the Case
  - Code Case N-740 (overlays)
- Case will not be restricted to GTAW
  - GMAW, Underwater laser welding, any process that can be qualified to meet the requirements of the Case
  - GTAW required for temper bead only

PWROG
PWR Owners Group

Inlay Acceptance Criteria

- **Acceptance examination / criteria for completed inlay per latest draft of Code Case is as follows:**
  1. Inlay surface, including at least 1/2 in. (13 mm) of adjacent material, shall be examined using liquid penetrant or eddy current examination method. Acceptance criteria shall be in accordance with Section III, NB-5352 except rounded indications with major dimension greater than 1/16 in. (1.5 mm) shall not be permitted in the inlay material. The adjacent base material shall satisfy the surface examination acceptance criteria for base material of the Construction Code or NB-2500
  2. Inlay volume including the fusion zone (and ferritic steel heat-affected zone, when temper bead welding is used) shall be ultrasonically examined in accordance with Section V, Article 4, using Cladding Technique One. Calibration blocks shall be in accordance with Fig. T-434.4.2.2. Acceptance criteria of Section III, NB-5330 shall apply.

PWROG
PWR Owners Group

Inlay Application
High Sulfur SST Safe End Material

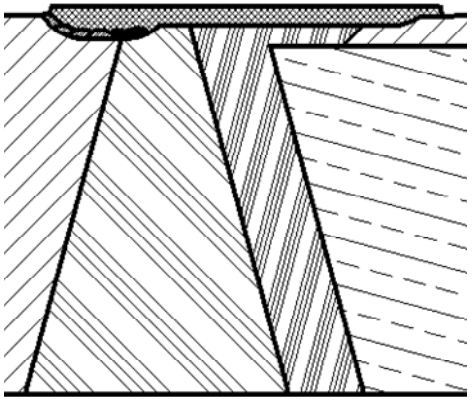

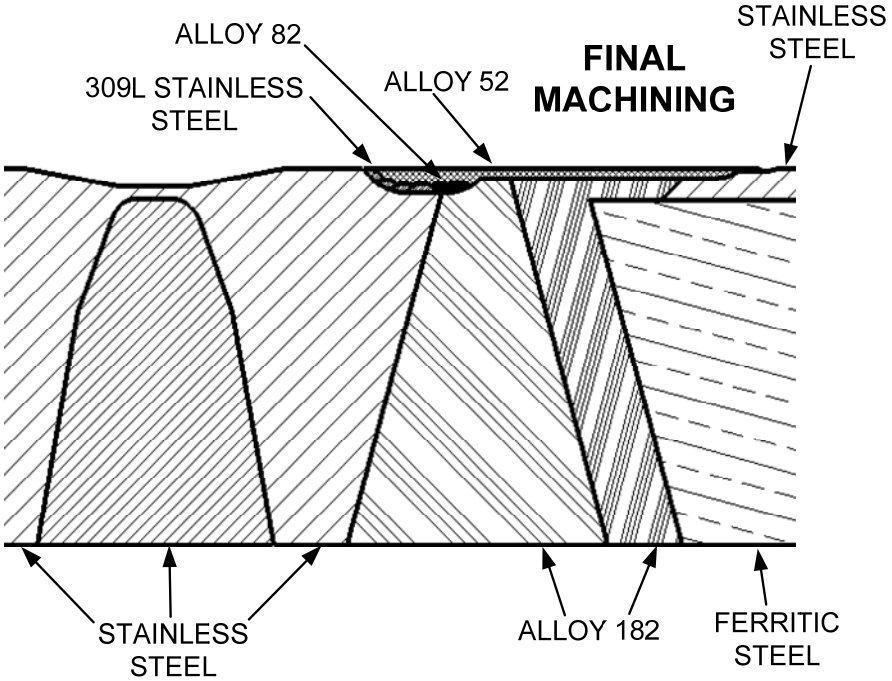

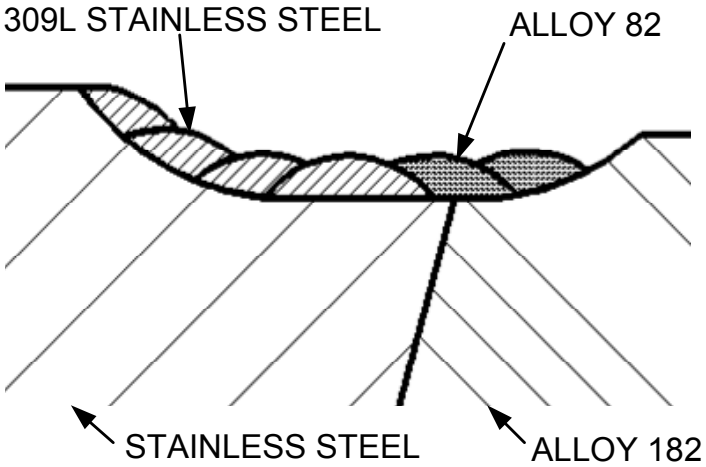

- Evaluate CMTR for sulfur content
- If necessary, apply Alloy 82 and 309L butter layer
- New heats of A52M have ultra low sulfur and phosphorous
  - Under evaluation

Sulfur Mitigation

- Portable spectroscopy system for precise measurement of sulfur and phosphorus under evaluation
  - Allows for a screening evaluation in-process to determine if a sulfur mitigation layer is necessary
  - Removes the uncertainty in CMTR sampling
- Continue to build on empirical data to determine acceptable levels of sulfur and phosphorus
- Mockup and qualification program includes sulfur mitigation layer

PWROG
PWR Owners Group

Surface Stress State

- Stress states due to welding/machining will be measured using X-Ray diffraction techniques during development of machining processes.
- Additional testing to determine the amount of cold work, if any, will be performed.
- Non-abusive machining techniques will be evaluated during testing and qualification.
  - Dry machining will be evaluated, as well as water and air based coolant to optimize schedule efficiency and minimize stresses and cold work.
- Important to note radiused tooling will be used for machining processes to minimize cold working of material.

PWROG
PWR Owners Group

Inlay Program Status

- PWROG Program
  - Received PWROG funding in January 2007
  - Task I - PDI equivalency completed and approved
    - AREVA / Wesdyne / EPRI NDE Center collaborative program
    - Baseline inlay mitigations
      - .130” mitigation
      - 1.00” repair
    - Flaw reduction – embedding the flaw
    - Flaw removal
  - Task II - Aegis integrated system qualification
    - Full scale mockup in Lynchburg Training Center
- AREVA Program
  - Commitment by AREVA via capital investment
    - Tooling development
    - DRB participation by utilities
    - Delivery system fabrication
    - Prototype testing to start in July 2008

Fully qualified by end of 2008

PA-MSC-0298 Project Overview

- **Task 1 objectives:**
  - Determine the effect that varying thicknesses of Alloy 52 material have on the transmission of ultrasonic sound waves.
  - Determine if cladding thickness can be accurately measured during the inspection process.
  - Verify existing PDI qualifications for RV primary nozzle weld geometries are applicable for RVPNI geometries.

PWROG
PWR Owners Group

Basis for Causal Analysis

► **PWROG Task 1 PDI Equivalency circumferential scan noise level progressively increased with inlay thickness**.

- Background noise in 1” thick inlay (Quadrant IV), was approximately 3X the noise levels in the non-inlayed region (Quadrant I) of the PDI equivalency mockup and the PDI reference mockup (601-1).
- Axial scan noise levels were also elevated, but principally from one scan direction.
- Signal-to-noise ratio (SNR) was weaker in Quadrant IV but adequate to dimension flaws. Depth sizing results are within expected sizing accuracies.

► **Concerns elevated noise levels could degrade flaw detection capability for some beam angles and directions.**

► **Weld quality was questioned as a causal factor for noise.**

PDI Equivalency Mockup

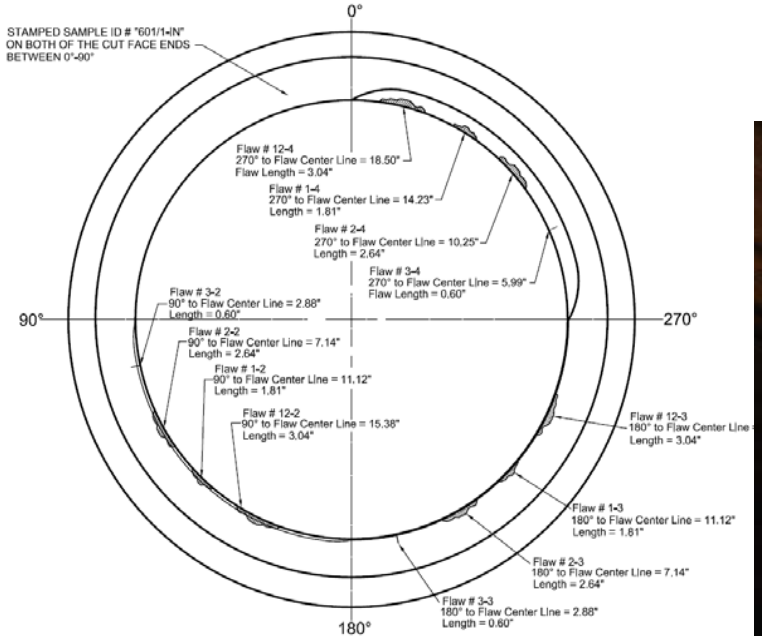

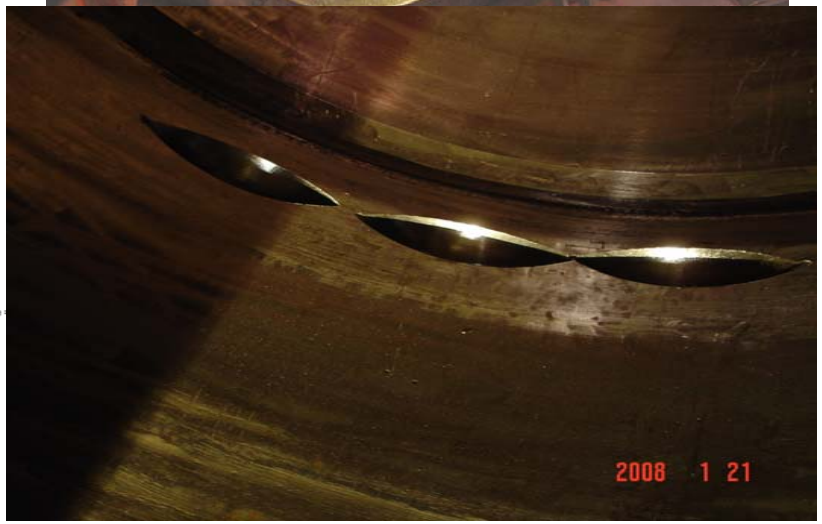

Fabricated from Shearon-Harris Unit 2 RV nozzle.
Samples taken from Quadrant IV, 1.0 Inch deep inlay.

PWROG
PWR Owners Group

PDI Equivalency Metallography

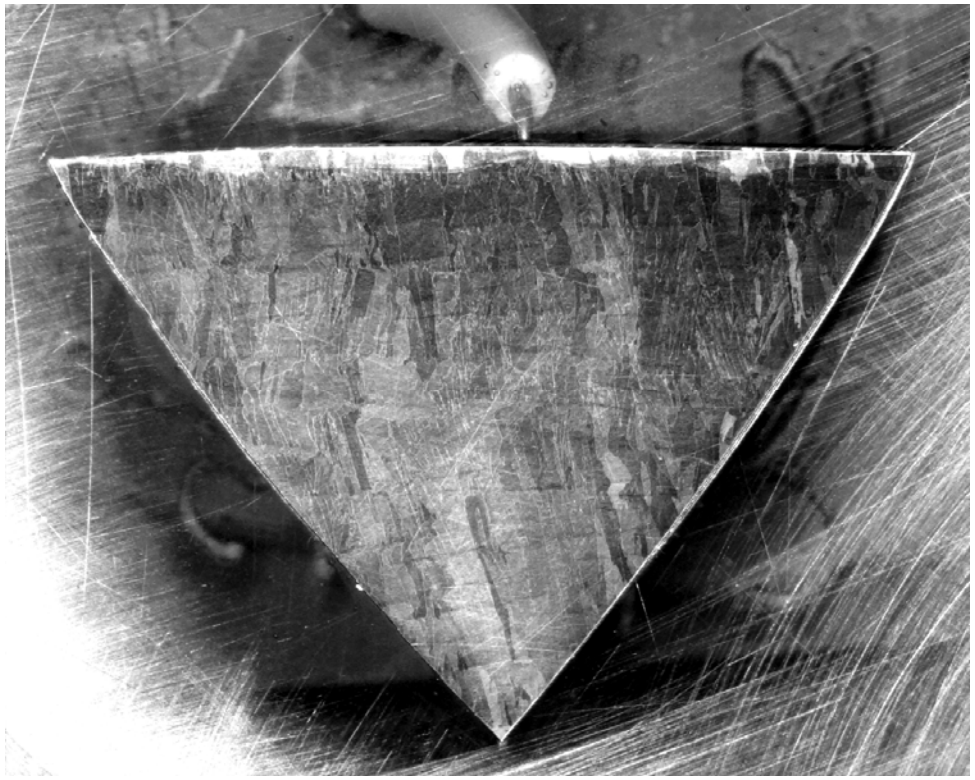

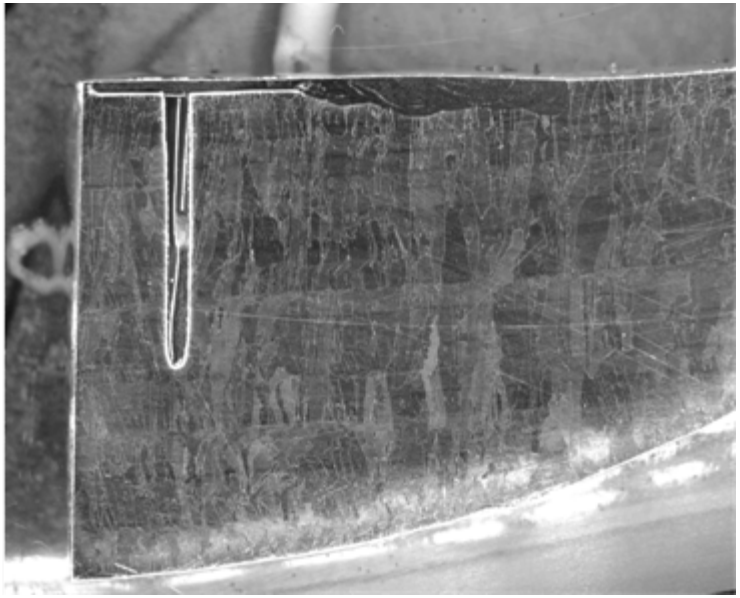

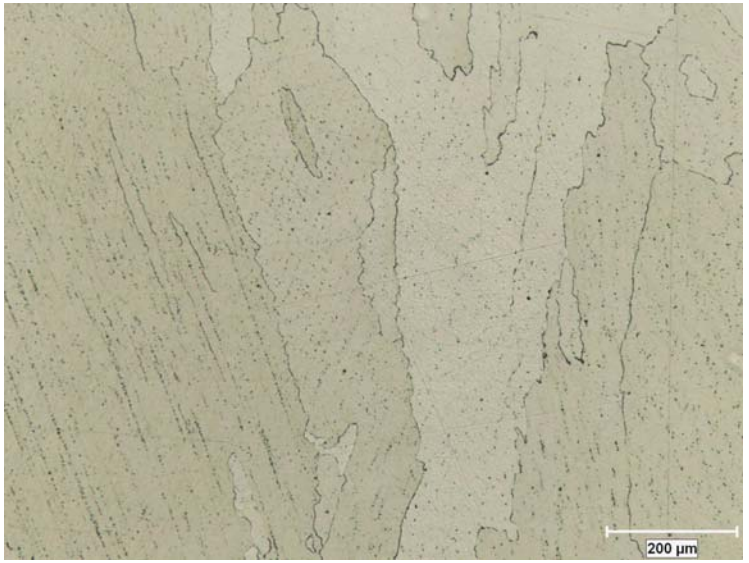

Highly directional columnar growth

Control Weld-Inlay Mock-up

- Evaluation was performed on UT signatures of 1” deep inlay deposits in a carbon steel pipe
  - In parallel with evaluation of PDI Equivalency Inlay Mock-up
  - Near identical geometry (diameter and wall thickness) to the PDI Equivalency Inlay Mock-up (Quadrant IV).
- Comparison of UT signatures served as a Fault Tree Gate w.r.t. causal effects of EPRI flaw implantation process
- SEM analysis of grain boundary carbide precipitation

PWROG
PWR Owners Group

Control Weld-Inlay Mock-up

Weld Patch	Weld Filler Metal	Comments
W1	ERNiCr3 (FM82)	Wire brush only
W2	ERNiCrFe-7A (FM52M)	Wire brush only
W3	ERNiCrFe-7A(FM52M)	Interlayer Grinding
W4	ERNiCr3 (FM82) with ERNiCrFe-7A (FM52M) on last 4 layers	Wire brush only
W5	ERNiCrFe-7A (FM52M)	No wire brush, no grinding

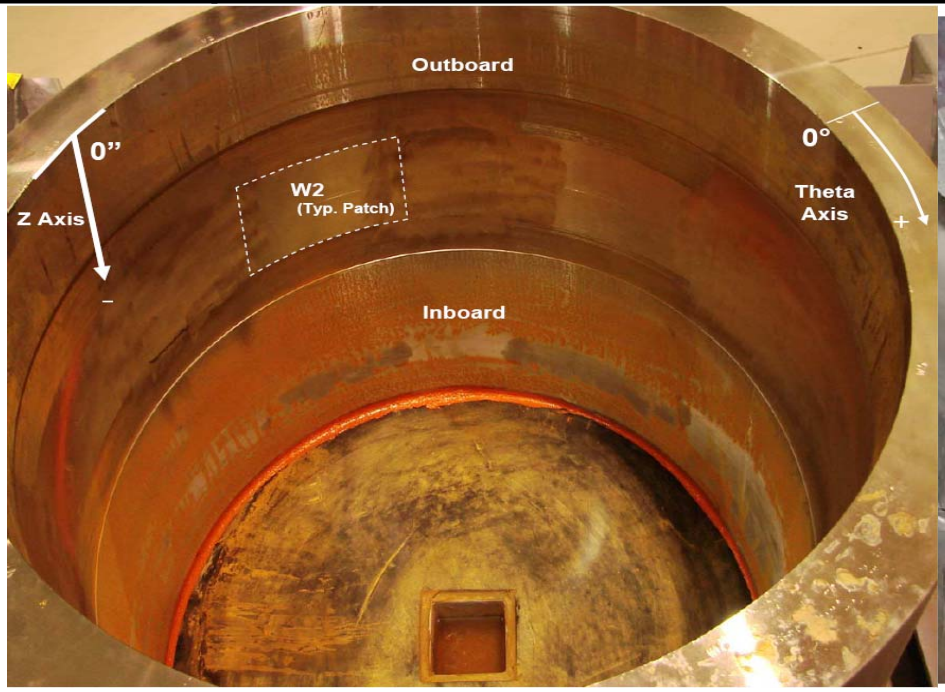

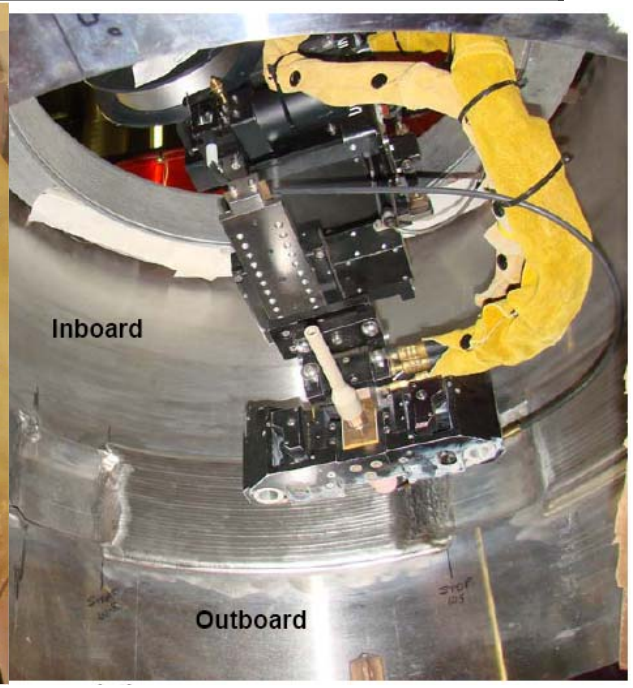

Control Experiment Observations

- Filler metal 52M exhibits noise levels that are direction dependent
  - Noise levels elevated when sound beam is directed in the weld bead progression direction.
  - Noise levels are negligible when directing the sound beam in the opposite direction of the weld bead progression. Comparable to filler metal 82/182 in 601-1 standard.
- The $M_{23}C_6$ carbide distribution of 52M weld inlay material is much less pronounced in the as-welded 52M deposit than in the 52M Inlay deposit thermally treated at 1750°F for flaw implantation
- $M_{23}C_6$ carbide solvus temperature is approximately 1600°F for filler metal 82/182 and 1900°F for filler metal 52M

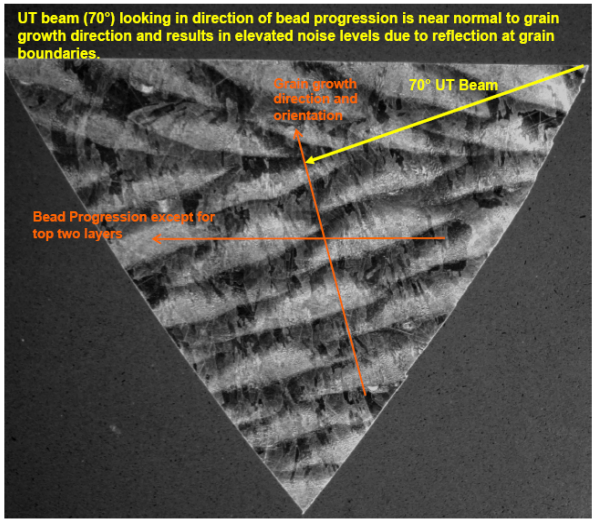

W2-C, HCl, 2%Bromine 98% Methanol etchant, high contrast image

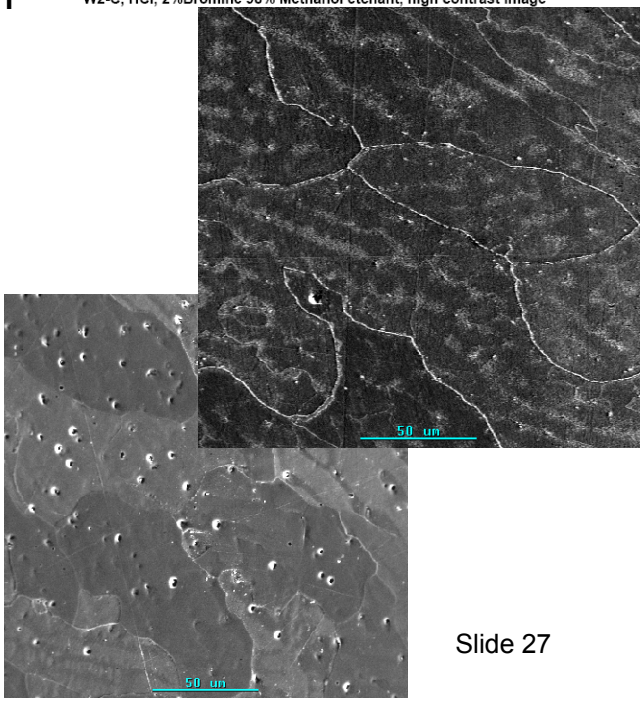

Causal Analysis Conclusions

- The degraded UT SNR in the PDI Equivalency Inlay Mock-up was not the result of degraded weld quality and/or a gross discontinuity distribution such as micro-porosity or DDC
- Good likelihood that the degraded UT SNR observed when performing UT examination of the 52M inlay material is related to two observations in the weld grain morphology and microstructure.
  - <u>Large directionally solidified austenitic grains.</u>
    - Primary Causal Factor.
    - Good Correlation supported by the dramatic change in SNR with respect to bead progression and UT scanning direction.
  - <u>The presence of coarse M23C6 decorated grain boundaries in the PDI Equivalency Inlay Mock-up.</u>
    - Potential secondary effect. There is little quantitative data correlating to degraded SNR.
    - Postulated as a potential difference between Quadrant 1 / STD 601-1 (FM82) and Quadrant IV (FM52M) on Circumferential Scans
- **The elevated background noise is <u>not</u> significant enough to degrade detectability or affect the existing PDI Qualification.**

PWROG
PWR Owners Group

Process Qualification and Mock Ups

- **AREVA NP Training Center**
- **Full scale**
- **Set-up and teardown**
- **Split into wet and dry segments**
- **Complete mitigation process including:**
  - Postulated failure recovery
  - Multiple nozzle operations
  - Use of draft procedures and travelers

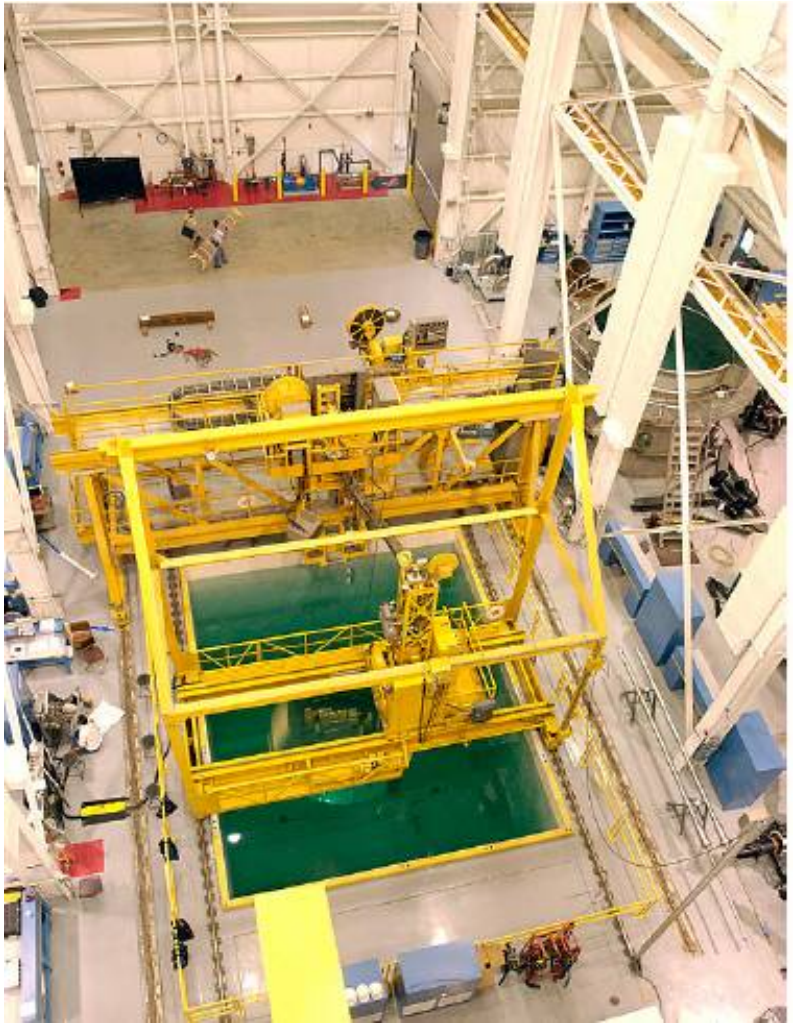

Summary

- **Removes susceptible material from environment**
- **Life of plant mitigation**
- **Reduced ISI schedule**
- **Will be Installed per 10CFR50.59**
  - Meets ASME Code Requirements
  - Relief items limited to ambient temperature welding
- **Fully remote implementation**
- **Parallel efficient operations through design and mockups**
  - Minimal schedule impact

Early planning & rigorous design / mockups leads to success

PWROG
PWR Owners Group

Questions

Additional Information

Testing and Qualification Details

- All tooling is included
- Representative of design and site conditions for 3A and 3C geometries, in addition to limits of tolerance
- Critical dimensions
- Tool functionality, i.e. motions
- Tool operability, i.e. machining, welding
- Inlay process
- Load tests
- Hydro test of FME Plug
- Cable management
- Tool reliability
- Production rates
- Contingency and failure recovery scenarios

PWROG
PWR Owners Group

Testing and Qualification Details

- Failure Modes and Effect Analysis for failure recovery scenarios
- Inspect RV flange for damage from TRVH
- Evaluate welding interpass temperature
- Determine when double up welding is required for repair cavities
- Evaluate welding in parallel with UT inspections
- Verify integrity of components under max motor loads (at applicable motor current limits and response times)
- Establish bench testing criteria for the Environmental System
- Environmental System filter change outs
- Evaluate Environmental System for flow and leak paths
- Evaluate the data gathering process with backup and verification files
- Rigging plan
- Validation of software specification

PWROG
PWR Owners Group

Cold Leg Bench Test

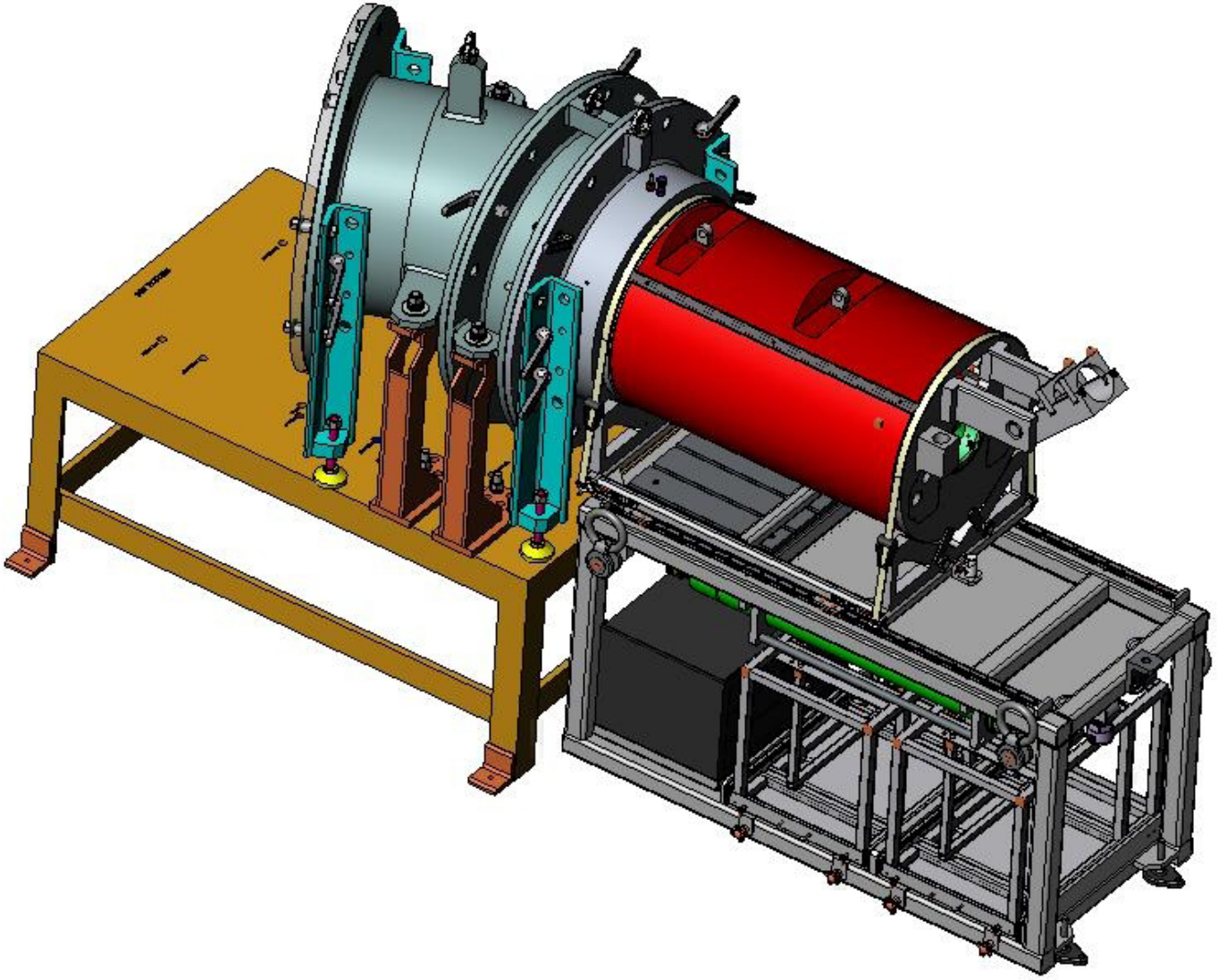

PWROG
PWR Owners Group

Dry and Wet Qualification

- The purpose is to perform the functional and operability qualifications that have not previously been completed in bench testing and perform integrated qualification (dress rehearsal)
  - Also setup for crew training
- Wet testing will qualify full scale in water condition

PWROG
PWR Owners Group

Dry and Wet Qualification

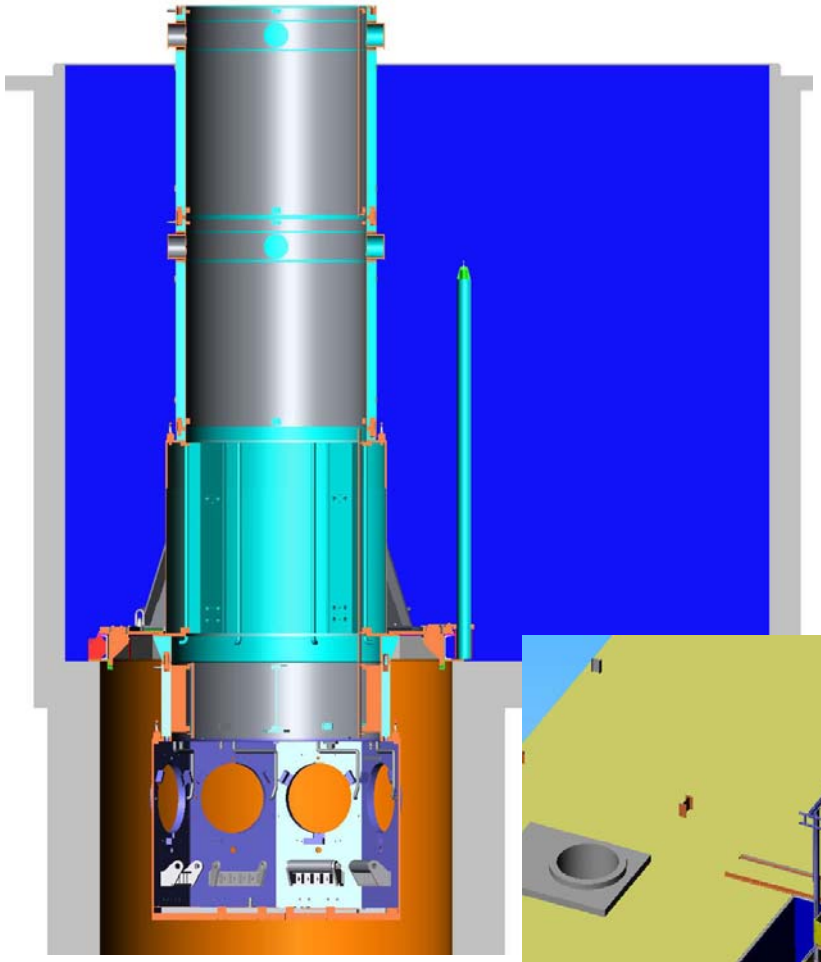

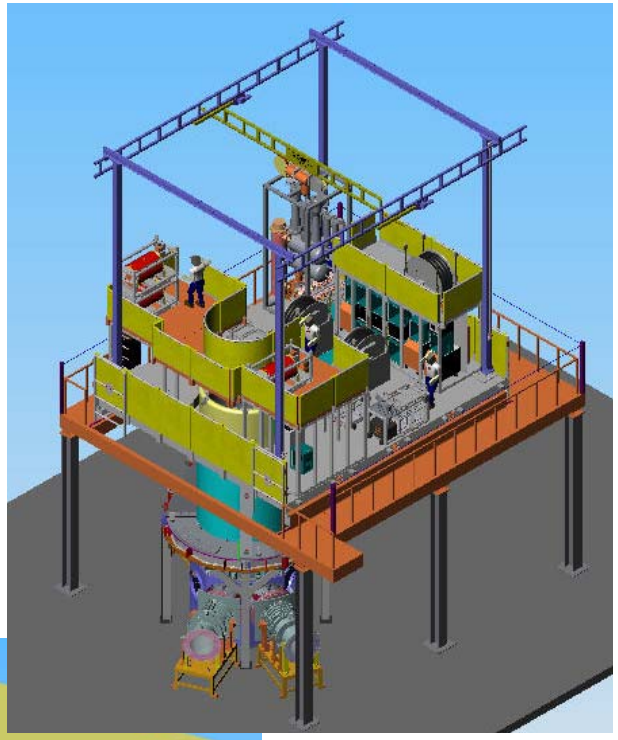

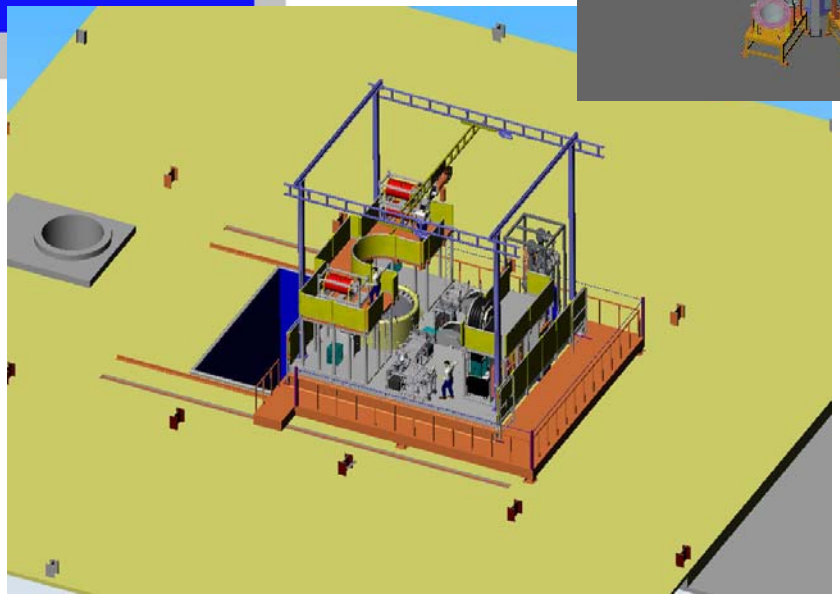

PWROG
PWR Owners Group

Tooling Overview

- Next generation system built on global technologies
  - Low dose
  - Fully remote
  - Parallel activities

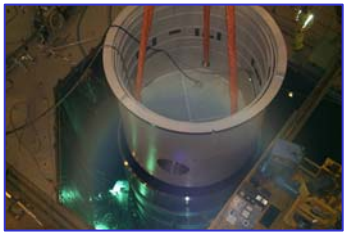

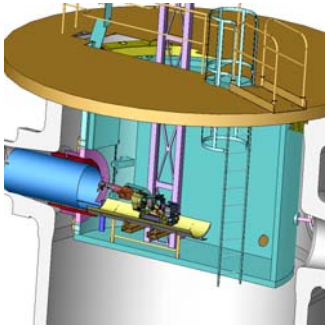

PREVIOUS GENERATION HAT & BARREL CONCEPTS

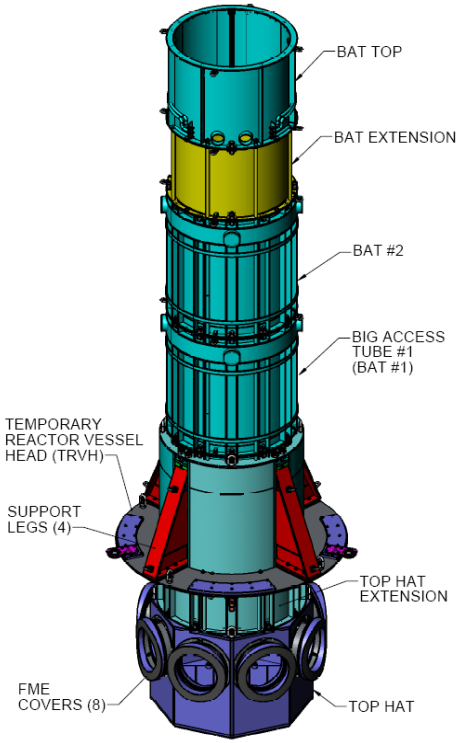

FLOODED CAVITY DELIVERY SYSTEM

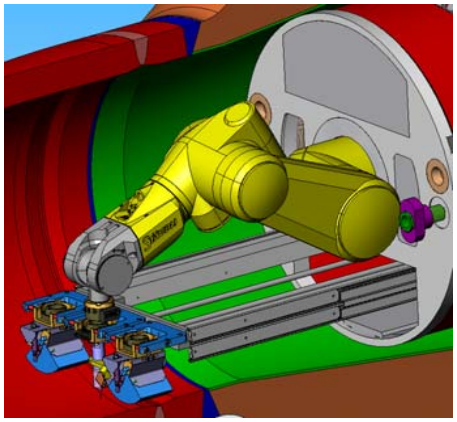

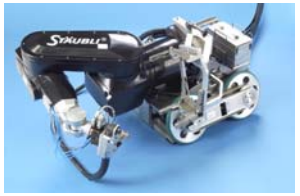

SFC ARTUR TECHNOLOGY

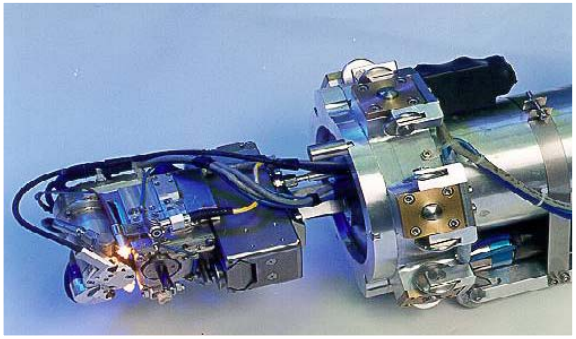

SGA IN-PIPE MANIPULATOR MACHINING TECHNOLOGY

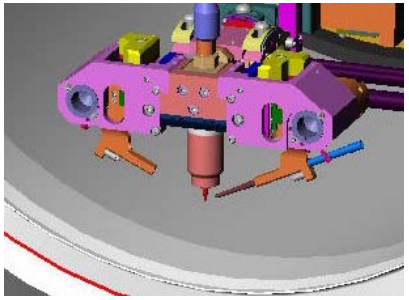

SAC REMOTE WELDING TECHNOLOGY

PWROG
PWR Owners Group

FCDS Sectional View

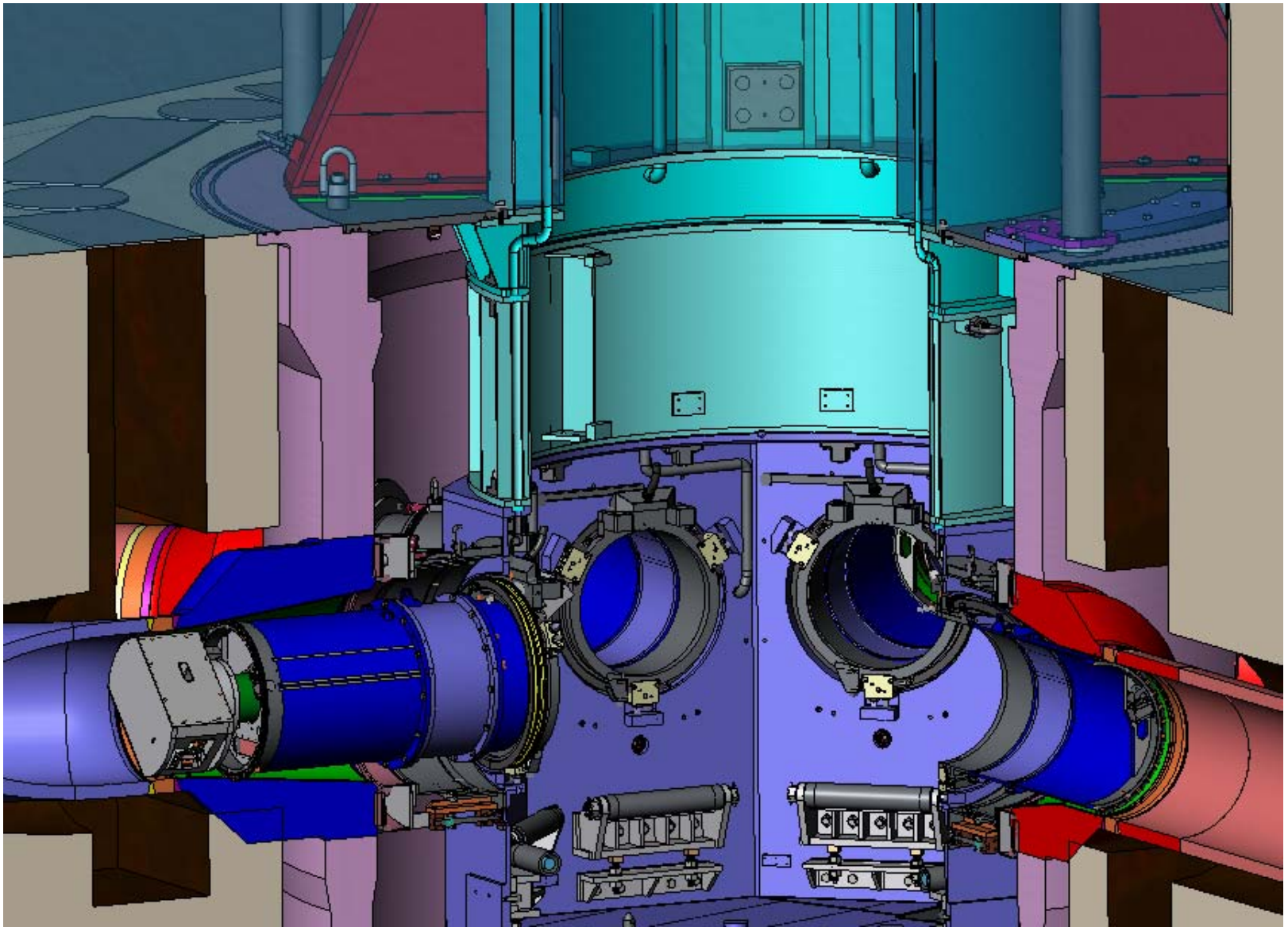

Work Platform

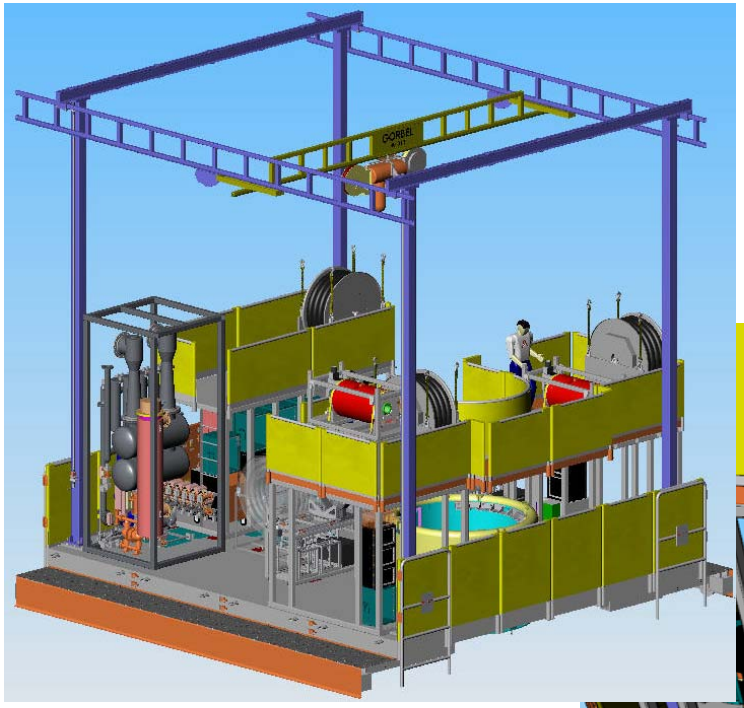

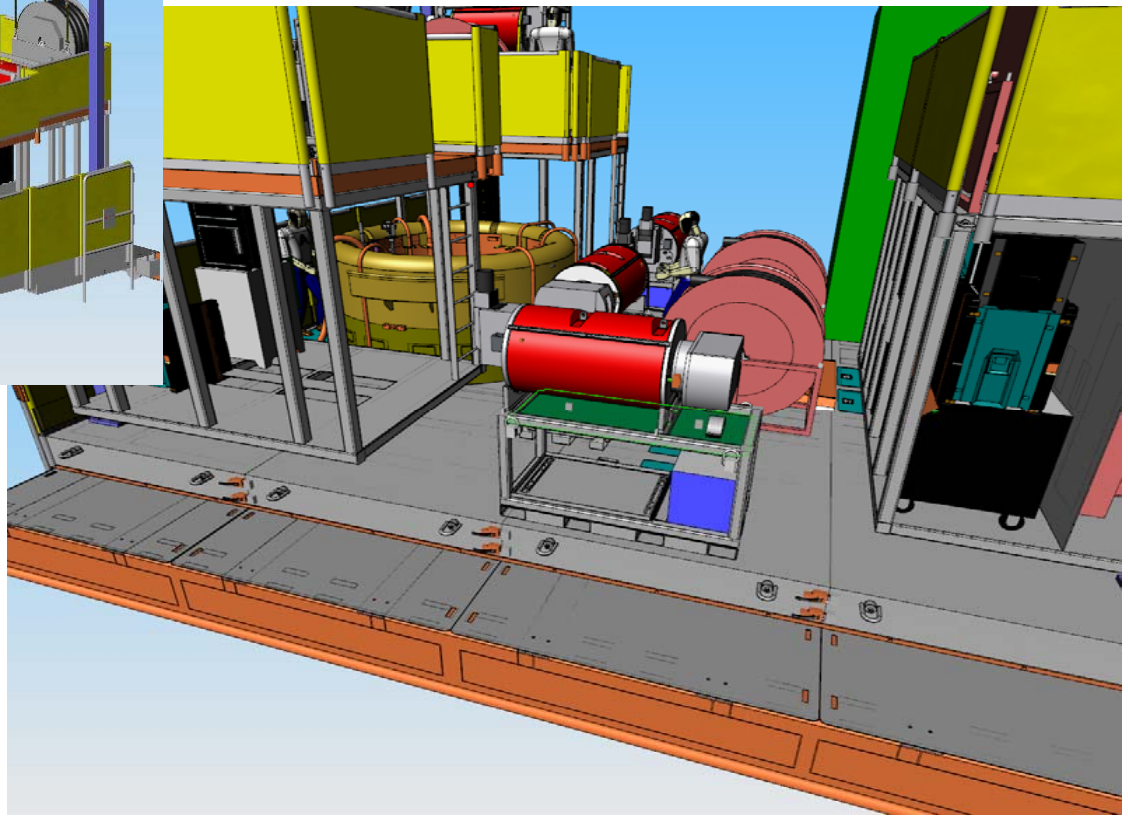

PWROG
PWR Owners Group

FCDS Erection

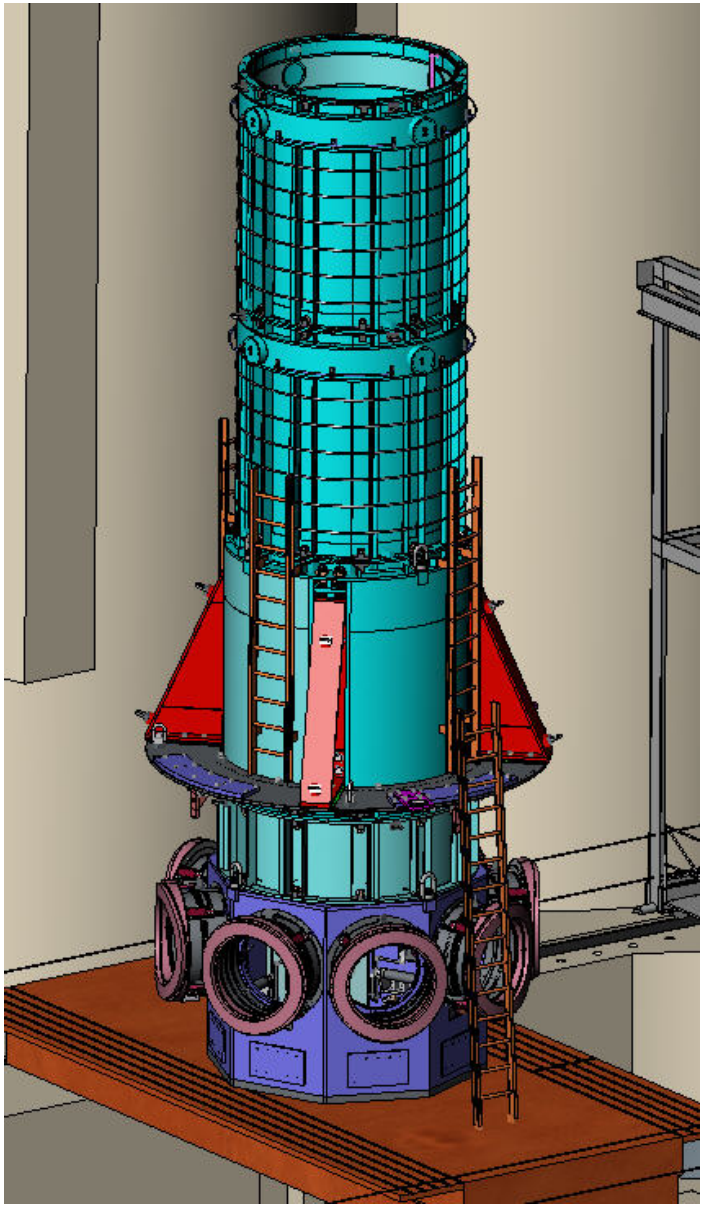

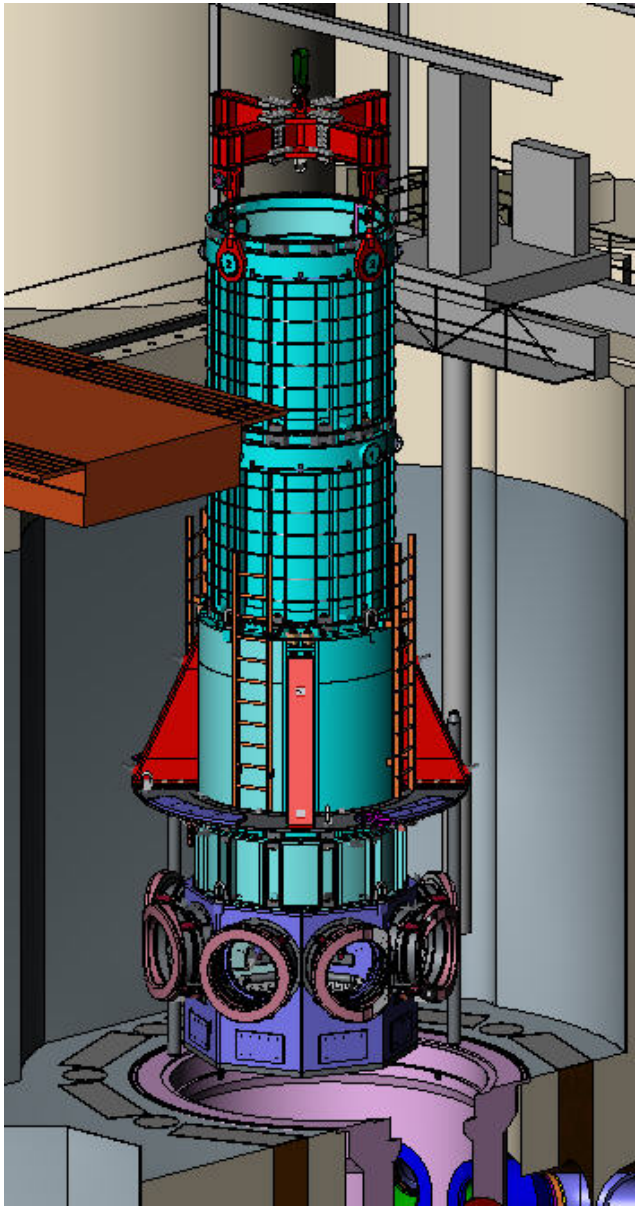

PWROG
PWR Owners Group

Common Tool Manipulator (CTM)

- Provide common delivery and mounting for end effectors:
  - Plug installation tool
  - NDE end effector
  - Machining end effector
  - Nozzle prep end effector
  - Welding end effector

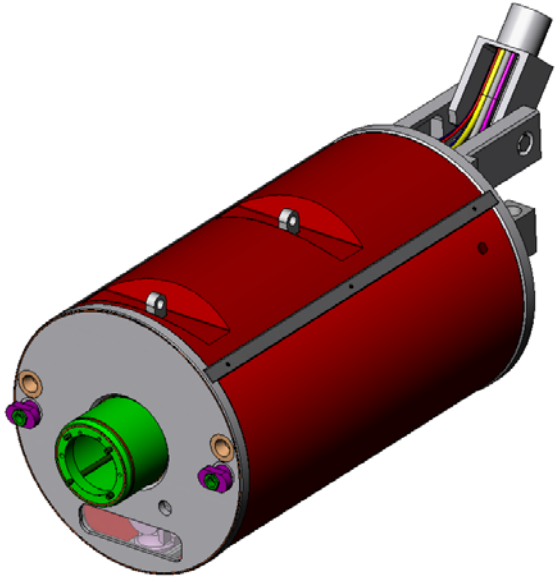

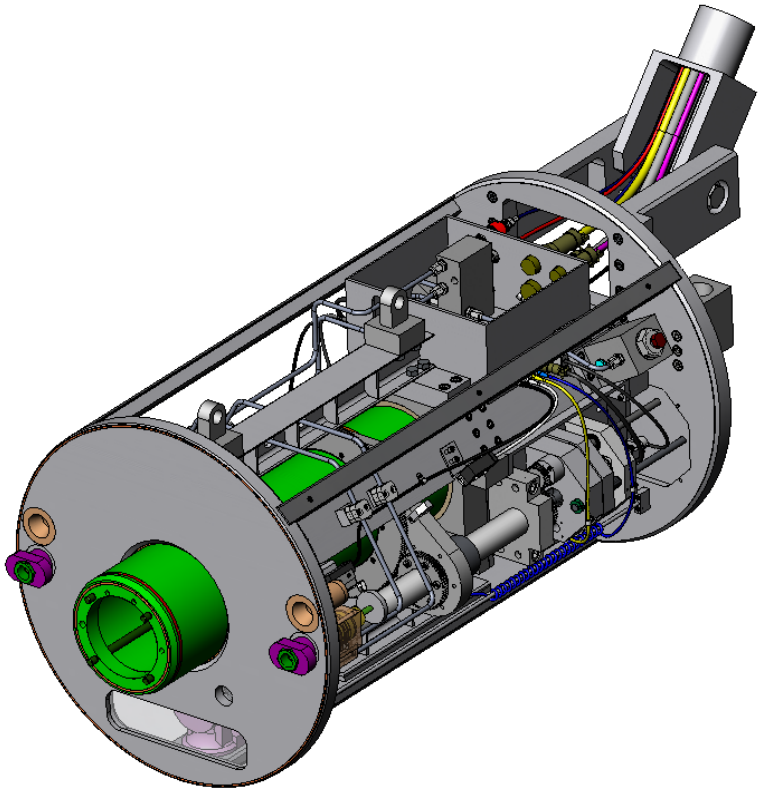

PWROG
PWR Owners Group

Staubli CTM

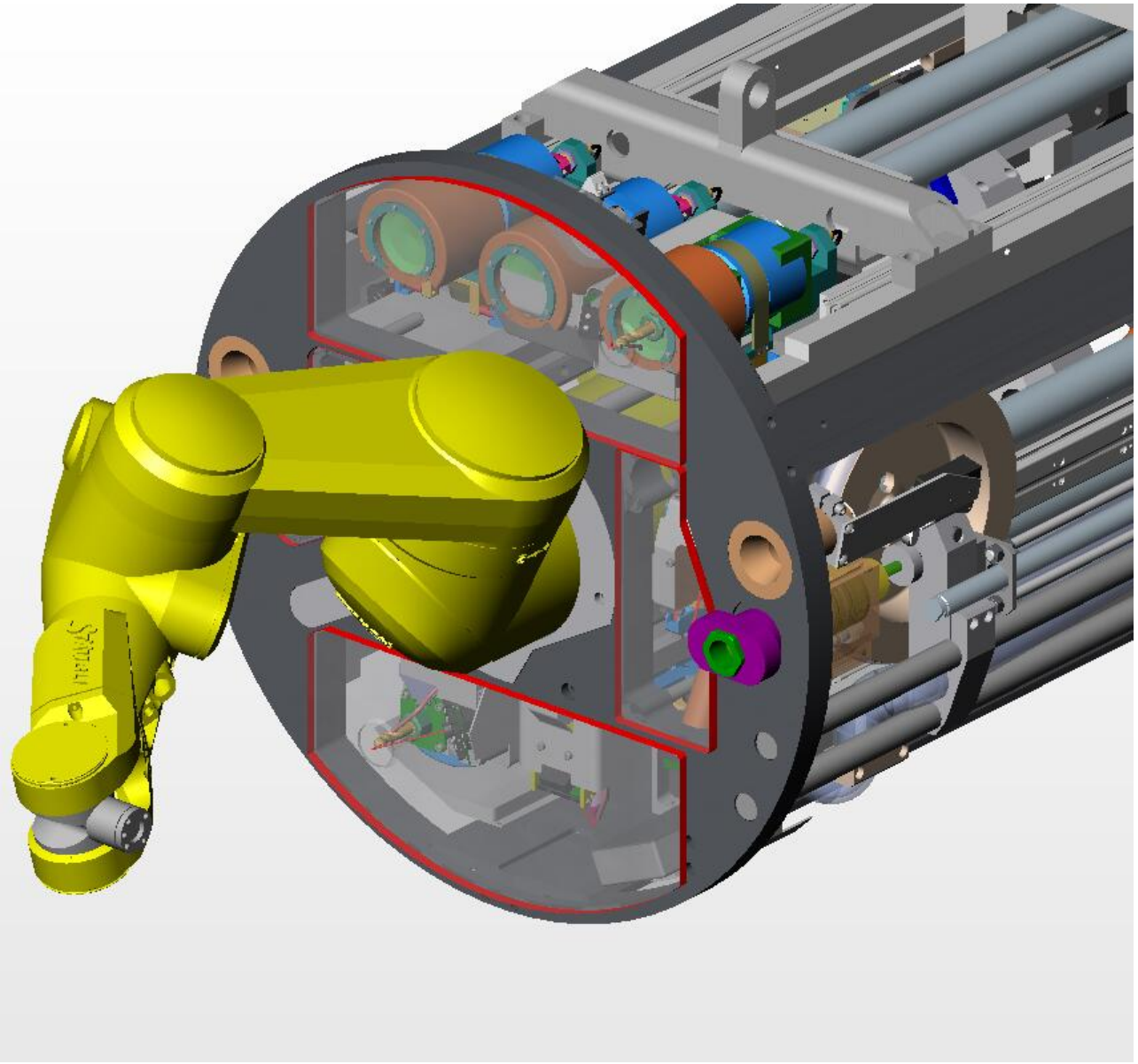

Staubli Mount: Camera View

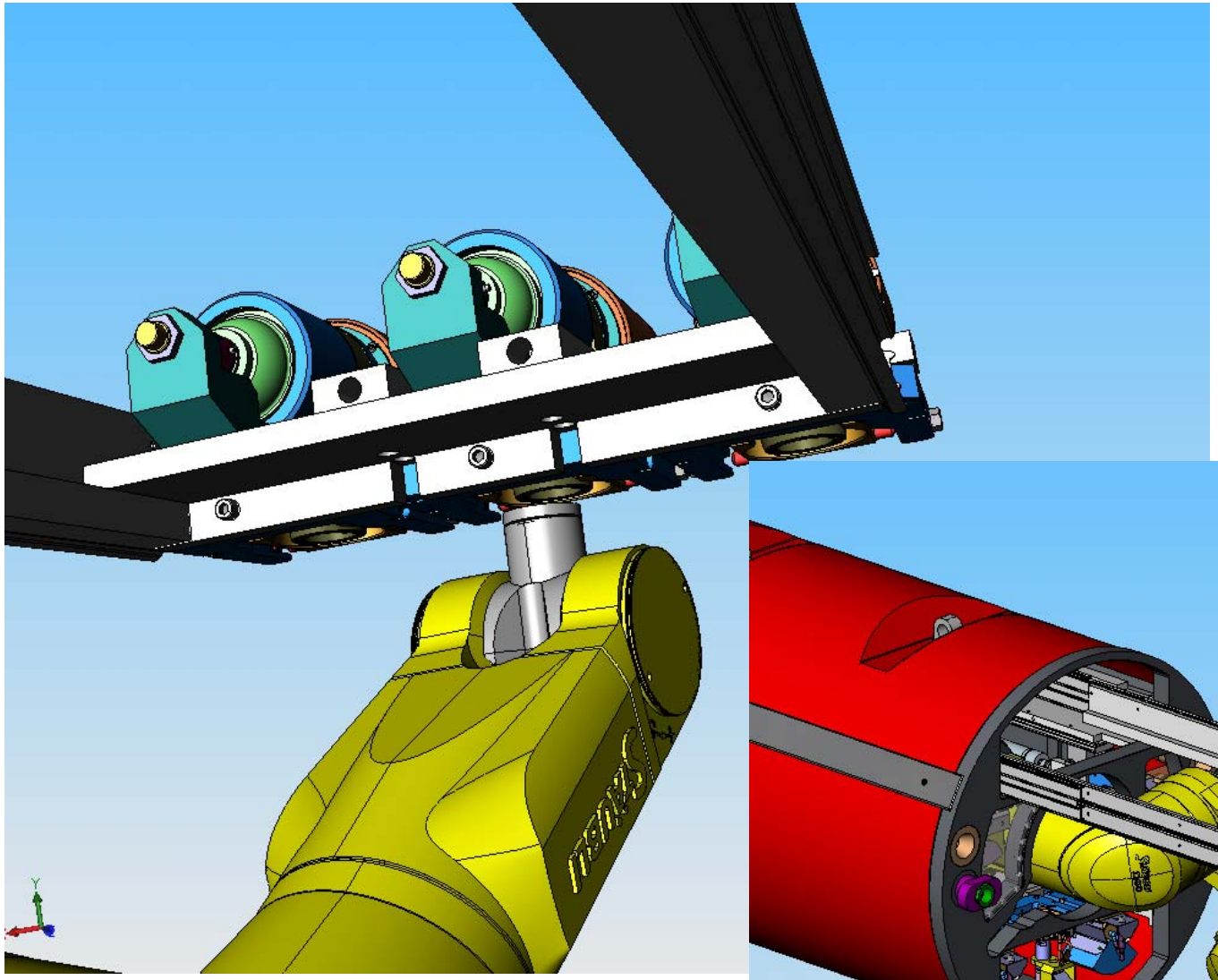

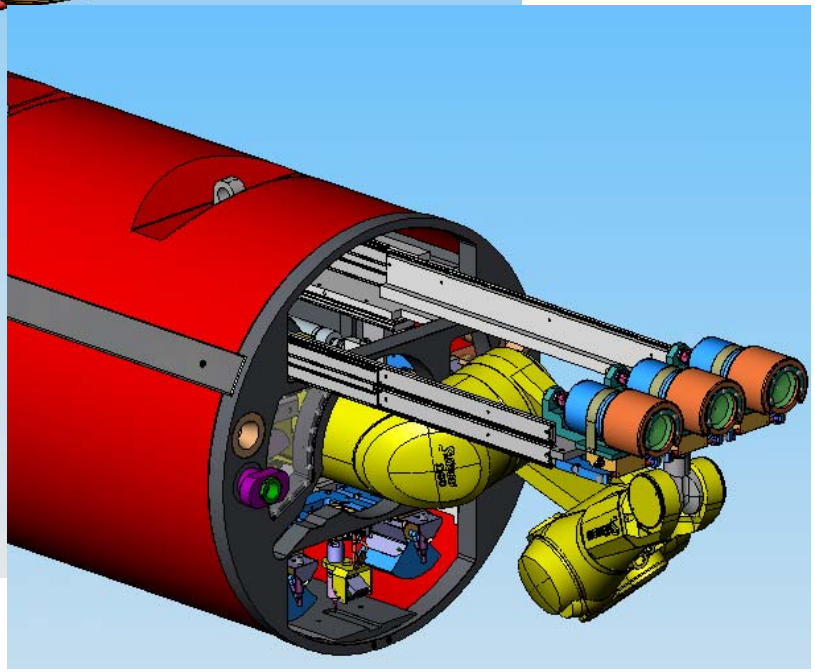

PWROG
PWR Owners Group

Process Redundancy and Safeguards

- **Tooling designs feature:**
  - Modular design for easy change out
  - Anti-contamination features – eliminate crud traps
  - Complete spare system – if it takes longer than 15 minutes to fix, the spare system is used
- **All remote tooling designs are required to have planned remote single failure proof recovery**
  - Example: if the CTM axial axis fails, the drive screw can be driven remotely by a powered ratchet tool on the end of a pole
- **All remote tooling designs are required to have planned double and triple failure proof recovery**

PWROG
PWR Owners Group

Boat Sampling Tooling

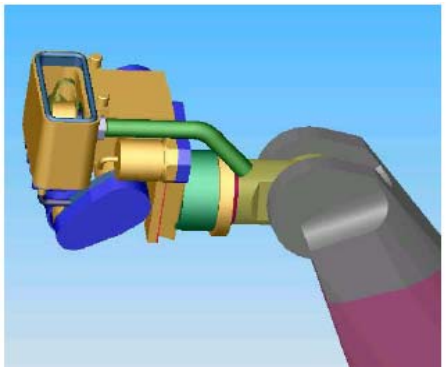

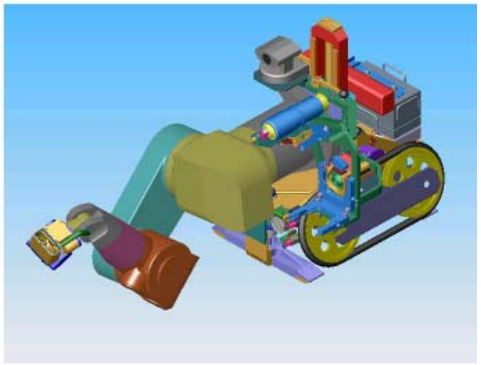

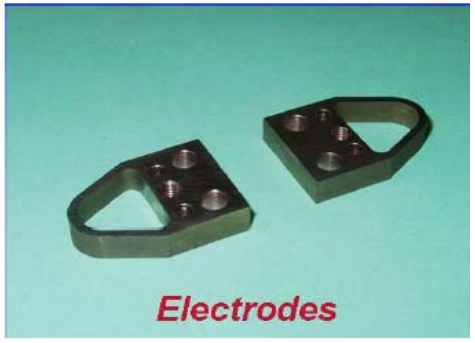

PWROG
PWR Owners Group
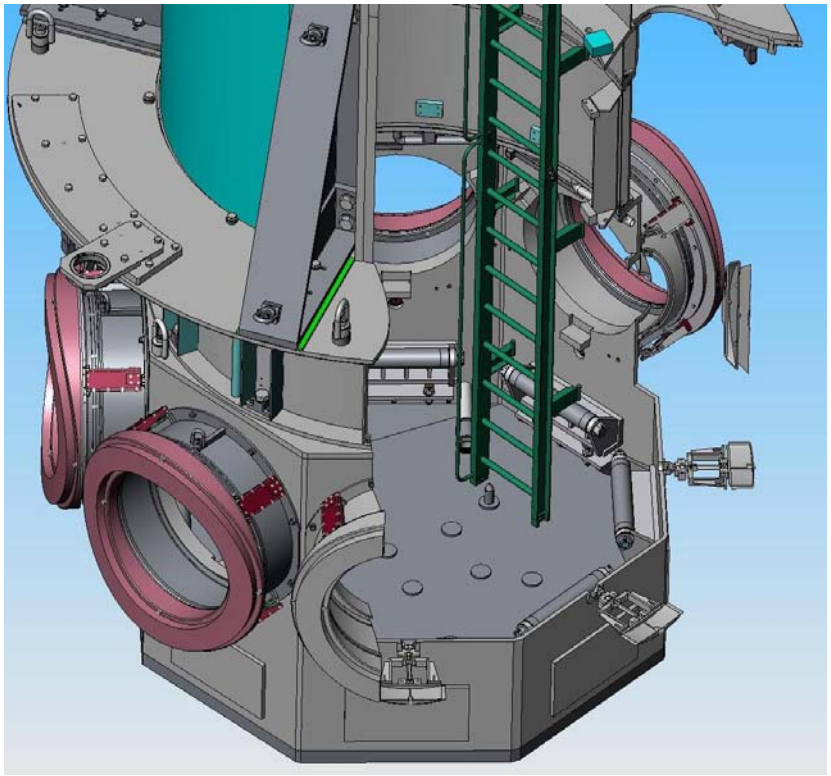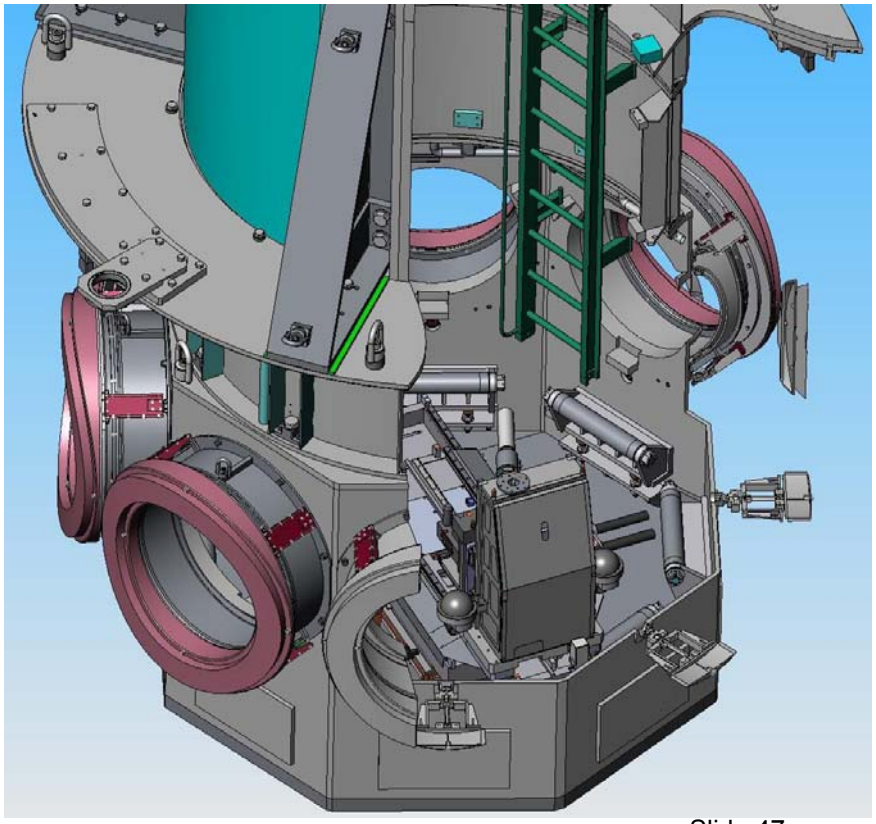
FCDS Contingency Access