August 12, 2008

Mr. William Levis
President & Chief Nuclear Officer
PSEG Nuclear LLC - N09
Post Office Box 236
Hancocks Bridge, NJ 08038

SUBJECT: SALEM NUCLEAR GENERATING STATION UNITS 1 AND 2: REPORT ON RESULTS OF STAFF AUDIT OF CORRECTIVE ACTIONS TO ADDRESS GENERIC LETTER 2004-02 (TAC NOS. MC4712 AND MC4713)

Dear Mr. Levis:

Generic Letter (GL) 2004-02, "Potential Impact of Debris Blockage on Emergency Recirculation During Design Basis Accidents at Pressurized-Water Reactors," requested that all pressurized-water reactor (PWR) licensees (1) evaluate the adequacy of the emergency sump recirculation function with respect to potentially adverse effects associated with post-accident debris, and (2) implement any plant modifications determined to be necessary. PSEG Nuclear LLC (PSEG), the licensee, has conducted an evaluation of recirculation sump performance for Salem Nuclear Generating Station Units 1 and 2 (Salem 1 and 2) and, as part of the resolution of the concerns raised in the GL, has made several modifications to the plant, including the installation of new sump strainers at both units.

Consistent with the discussion in the "Reasons for Information Request" section of GL 2004-02, the U.S. Nuclear Regulatory Commission (NRC) staff is using sample audits to help verify that addressees have resolved the concerns identified in the generic letter. The NRC staff has conducted a detailed audit of the new Salem Unit 1 and Unit 2 sump strainer design, including supporting analyses and testing.

The enclosed audit report was reviewed by PSEG who confirmed that the report does not contain proprietary information that should not be released to the public. The enclosed audit report provides NRC feedback on the licensee's GL 2004-02 corrective actions and supporting analyses.

The enclosed audit report does not reach a conclusion regarding overall adequacy of PSEG's GL 2004-02 corrective actions for Salem 1 and 2. NRC staff will base its assessment of PSEG's GL 2004-02 corrective actions on the licensee's GL 2004-02 supplemental responses.

Further, the audit team did not evaluate whether the licensee has identified and/or submitted appropriate licensing documents for its GL 2004-02 corrective actions. The licensee's maintenance of its licensing basis is within the scope of the Reactor Oversight Program. The audit team did not evaluate the completeness of the licensee's implementation of GL 2004-02 corrective actions. That is also within the scope of the Reactor Oversight Program under Temporary Instruction, TI 2515/166, "Pressurized Water Reactor Containment Sump Blockage."

In conclusion, the licensee was supportive during all phases of the audit. Consideration was given by PSEG in providing appropriate office space and facilitating the emergency core cooling system pump rooms tour taken by audit team members. The licensee's primary point-of-contact during the preparation, conduct and report writing phases of the audit was helpful in accomplishing the audit.

If you have any questions, please contact me at 301-415-1420.

Sincerely,

/ra/

Richard B. Ennis, Senior Project Manager
Plant Licensing Branch I-2
Division of Operating Reactor Licensing
Office of Nuclear Reactor Regulation

Docket Nos. 50-272 and 50-311

Enclosure: As stated

cc w/encl: See next page

In conclusion, the licensee was supportive during all phases of the audit. Consideration was given by PSEG in providing appropriate office space and facilitating the emergency core cooling system pump rooms tour taken by audit team members. The licensee's primary point-of-contact during the preparation, conduct and report writing phases of the audit was helpful in accomplishing the audit.

If you have any questions, please contact me at 301-415-1420.

Sincerely,

/ra/

Richard B. Ennis, Senior Project Manager
Plant Licensing Branch I-2
Division of Operating Reactor Licensing
Office of Nuclear Reactor Regulation

Docket Nos. 50-272 and 50-311

Enclosure: As stated

cc w/encl: See next page

DISTRIBUTION:
LPL1-2 R/F
RidsNrrDssSsibResource
RidsNrrDssDprResource
RidsNrrDciCsgbResource
LWhitney
JGolla
RidsNrrDssResource
RidsNrrPMREnnisResource
RArchitzel

ADAMS Accession Number: ML082170506 ***via memorandum ML081360164**

OFFICE	LPL1-2/PM	LPL1-2/LA	SSIB/BC	LPL1-2/BC
NAME	JLamb	ABaxter	MScott*	HChernoff (REnnis for)
DATE	8/6/08	8/11/08	06/19 /08	8/12/08

OFFICIAL RECORD COPY

Salem Nuclear Generating Station, Unit Nos. 1 and 2

cc:

Mr. Thomas Joyce
Senior Vice President - Operations
PSEG Nuclear
P.O. Box 236
Hancocks Bridge, NJ 08038

Mr. Dennis Winchester
Vice President - Nuclear Assessment
PSEG Nuclear
P.O. Box 236
Hancocks Bridge, NJ 08038

Mr. Robert Braun
Site Vice President - Salem
PSEG Nuclear
P.O. Box 236
Hancocks Bridge, NJ 08038

Mr. Carl Fricker
Vice President - Operations Support
PSEG Nuclear
P.O. Box 236
Hancocks Bridge, NJ 08038

Mr. George Gellrich
Plant Manager - Salem
PSEG Nuclear
P.O. Box 236
Hancocks Bridge, NJ 08038

Mr. James Mallon
Manager - Licensing
PSEG Nuclear
P.O. Box 236
Hancocks Bridge, NJ 08038

Mr. Steven Mannon
Manager - Salem Regulatory Assurance
PSEG Nuclear
P.O. Box 236
Hancocks Bridge, NJ 08038

Mr. Jeffrie J. Keenan, Esquire
PSEG Nuclear - N21
P.O. Box 236
Hancocks Bridge, NJ 08038

Township Clerk
Lower Alloways Creek Township
Municipal Building, P.O. Box 157
Hancocks Bridge, NJ 08038

Mr. Paul Bauldauf, P.E., Asst. Director
Radiation Protection Programs
NJ Department of Environmental
Protection and Energy
CN 415
Trenton, NJ 08625-0415

Mr. Brian Beam
Board of Public Utilities
2 Gateway Center, Tenth Floor
Newark, NJ 07102

Regional Administrator, Region I
U.S. Nuclear Regulatory Commission
475 Allendale Road
King of Prussia, PA 19406

Senior Resident Inspector
Salem Nuclear Generating Station
U.S. Nuclear Regulatory Commission
Drawer 0509
Hancocks Bridge, NJ 08038

Mr. William Levis
President and Chief Nuclear Officer
PSEG Nuclear, LLC
P.O. Box 236
Hancocks Bridge, NJ 08038

Salem Units1/2 GSI-191 Generic Letter 2004-02
Corrective Actions Audit Report

ENCLOSURE

TABLE OF CONTENTS

ACRONYMS.....v

1.0 BACKGROUND.....1

1.1 Introduction.....1

1.2 Bulletin 2003-01 Responses.....- 2 -

1.3 Generic Letter 2004-02 September 1, 2005 Response.....- 4 -

2.0 DESCRIPTION OF CHANGES.....- 8 -

3.0 BASELINE EVALUATION AND ANALYTICAL REFINEMENTS.....- 8 -

3.1 Break Selection.....- 8 -

3.2 Debris Generation/Zone of Influence (Excluding Coatings).....- 10 -

3.3 Debris Characteristics.....- 15 -

3.3.1 Nukon®.....- 16 -
3.3.2 Kaowool®.....- 16 -
3.3.3 Generic Fiberglass.....- 17 -
3.3.4 Min-K®.....- 18 -
3.3.5 Mirror Reflective Metallic Insulation.....- 18 -
3.3.6 Transco Metal Reflective Insulation.....- 18 -
3.3.7 Latent Fibrous Debris.....- 18 -
3.3.8 Latent Particulate Debris.....- 19 -
3.3.9 Foreign Materials.....- 19 -
3.3.10 Fiber from Lead Blankets.....- 19 -

3.4 Latent Debris.....- 19 -

3.4.1 Scope of Audit.....- 19 -
3.4.2 Latent Debris Sampling Methodology.....- 20 -
3.4.3 Latent Debris Mass and Foreign Materials Results.....- 21 -

3.5 Debris Transport.....- 22 -

3.5.1 Blowdown and Washdown Transport.....- 23 -
3.5.2 Pool-Fill Transport.....- 25 -
3.5.3 Containment Pool Recirculation Transport.....- 25 -
3.5.4 Calculation of Debris Transport Percentages.....- 35 -
3.5.5 Overall Transport Results.....- 36 -
3.5.6 Conservatism in the Debris Transport Calculation.....- 39 -

3.6 Head Loss and Vortexing.....- 39 -

3.6.1 Background.....- 39 -
3.6.2 System Characterization-Design Input to Head Loss Evaluation.....- 41 -
3.6.4 Clean Strainer Head Loss Calculation.....- 56 -
3.6.5 Vortex Evaluation.....- 57 -
3.6.6 Head Loss Calculation.....- 58 -

3.7 Net Positive Suction Head.....- 59 -

3.7.1 Audit Scope.....- 59 -
3.7.2 ECCS Configuration in Recirculation Mode.....- 59 -
3.7.3 NPSH of the RHR Pumps.....- 60 -

3.8 Coatings Evaluation ..... - 66 -
3.8.1 Coatings Zone of Influence ..... - 66 -
3.8.2 Coatings Debris Characteristics ..... - 67 -

4.0 DESIGN AND ADMINISTRATIVE CONTROLS ..... - 68 -

4.1 Debris Source Term ..... - 68 -
4.1.1 Housekeeping and Foreign Material Exclusion Programs ..... - 68 -
4.1.2 Change-Out of Insulation ..... - 70 -
4.1.3 Modifying Existing Insulation ..... - 70 -
4.1.4 Modify Other Equipment or Systems ..... - 70 -
4.1.5 Modify or Improve Coatings Program ..... - 71 -

4.2 Screen Modification Package ..... - 71 -
4.2.1 Design Change ..... - 71 -
4.2.2 10 CFR 50.59 Screening Evaluation ..... - 72 -
4.2.3 Environmental Qualification (EQ) ..... - 73 -
4.2.4 Maintenance ..... - 73 -

5.0 ADDITIONAL DESIGN CONSIDERATIONS ..... - 74 -

5.1 Sump Strainer Structural Analysis ..... - 74 -
5.1.1 Strainer Module Evaluation ..... - 75 -
5.1.2 High-Energy Line Break Evaluation ..... - 76 -

5.2 Upstream Effects ..... - 76 -

5.3 Downstream Effects ..... - 79 -
5.3.1 Regulatory Basis ..... - 79 -
5.3.2 Downstream Effects – Fuel and Vessel ..... - 81 -
5.3.3 Downstream Effects - Components and Systems ..... - 84 -

5.4 Chemical Effects ..... - 88 -

6.0 CONCLUSIONS ..... - 90 -

TABLES

Table 1.1-1 Salem Audit team members 1
Table 3.2-1 Salem Insulation ZOI Radii 11
Table 3.2-2 Bounding LOCA-Generated Insulation Debris Quantities (Less Coatings 14
Table 3.3-1 Summary of Assumed Characteristics for Non-Coatings Debris 15
Table 3.4-1 Salem Latent Debris and Foreign Material Result 22
Table 3.5-1 Incipient Tumbling velocity Metrics for Debris Transport During Recirculation 30
Table 3.5-2 Curb Lift Velocity Metrics for Debris Transport During Recirculation 30
Table 3.5-3 Summary of debris transport results 38
Table 3.6-1 Bounding Quantities of debris for Head loss testing 47
Table 3.6-2 Selection of Surrogate test debris 48
Table 3.7-1 Assumed Operating Conditions and NPSH Margin results for RHR Pumps 61

FIGURES

Figure 3.6-1 CCI Test Loop……44

Figure 3.6-2 CCI Test Loop for Future Tests……45

APPENDICES

Appendix I Open Items……...…….……91

Appendix II. References 94

ACRONYMS

ADAMS	[NRC] Agency Document Access and Management System
ANSI	American National Standards Institute
ASME	American Society of Mechanical Engineers
ASTM	American Society for Testing and Materials
BWR	Boiling Water Reactor
CFR	Code of Federal Regulations
CS	containment spray
CSS	Containment Spray System
CFD	computational fluid dynamics
DBA	design basis accident
DBE	design basis earthquake
ECCS	emergency core cooling system
EOP	emergency operating procedure
EPRI	Electric Power Research Institute
EQ	equipment qualification
GL	Generic Letter
GR	NEI 04-07 Volume 1, PWR Sump Performance Evaluation Methodology (Guidance Report)
GSI	Generic Safety Issue
HELB	high-energy line break
ICET	Integrated Chemical Effects Tests
LAR	license amendment request
L/D	length/diameter
LOCA	loss-of-coolant accident
MRI®	metal reflective insulation (Transco brand name)
MSLB	main stream line break
NEI	Nuclear Energy Institute
NPSH	net positive suction head
NPSHa	net positive suction head available
NPSHr	net positive suction head required
NRC	Nuclear Regulatory Commission
NRR	Office of Nuclear Reactor Regulation
PWR	pressurized water reactor
RCS	reactor coolant system
RG	Regulatory Guide
RMI	reflective metal insulation (generic)
RPV	reactor pressure vessel
QA	quality assurance
QC	quality control
SEM	scanning electron microscope
SE	NEI 04-07, Volume II: Safety Evaluation on NEI 04-07 Volume 1, PWR Sump Performance Evaluation Methodology
SG	steam generator
SI	safety injection
TS	Technical Specifications
UFSAR	updated final safety evaluation report
ZOI	zone of influence

1.0 BACKGROUND

1.1 Introduction

The U.S. Nuclear Regulatory Commission (NRC) is auditing, on a sample basis (related to reactor type, containment type, strainer vendor, NRC regional office, and sump replacement analytical contractor), licensee corrective actions for Generic Letter (GL) 2004-02, "Potential Impact of Debris Blockage on Emergency Recirculation During Design Basis Accidents at Pressurized-Water Reactors," dated September 13, 2004 [1], for approximately 10 commercial pressurized water reactors (PWRs). The purpose of the audits is to verify that the implementation of Generic Safety Issue 191, “Assessment of Debris Accumulation on PWR Sump Performance” (GSI-191) sump strainer and related modifications bring those reactor plants into full compliance with 10 CFR 50.46, “Acceptance Criteria for Emergency Core Cooling Systems for Light-water Nuclear Power Reactors,” and related requirements, and to draw conclusions as to the probable overall effectiveness of GL 2004-02 corrective actions for the 69 U.S. operating PWRs. Table 1.1-1 lists NRC staff and consultants participating in the Salem GSI-191 audit.

Table 1.1-1 NRC Audit Team Members

Name	Organization	Area of Review
John Lehning	NRC	Debris Characteristics, Debris Transport/CFD/ Alternate Methodology
Leon Whitney	NRC	Team Leader
Paul Klein	NRC	Chemical Effects
Steven Unikewicz Ervin Geiger	NRC	Downstream Effects, components, Vessel and Fuel
Stephen Smith	NRC	Strainer Head-loss, Vortexing and Testing/Upstream Design Considerations
Ervin Geiger	NRC	Debris Source Term (Configuration management)
Matthew Yoder	NRC	Coatings, (ZOI, Transport, debris Characteristics, Head-loss)
Frank Arner	NRR/Region1 Inspector	Screen Mod Package, 50.59, Configuration Management, TS Changes, QA/QC, Maintenance, EQ.
Clint Shaffer	ARES Corporation	Baseline/ Break Selection/ ZOI/Debris Generation
Ted Ginsberg	Brookhaven National Laboratory	NPSH Margin/Latent Debris
Ralph Landry	NRC	Fuel/Vessel-In Office Review
Brett Titus	NRC	Strainer Structural Design (In-Office Review)
Michael Scott	NRC	Branch Chief

Salem Generating Station Unit 1 (Salem 1) and Salem Generating Station Unit 2 (Salem 2) are operated by Public Service Electric and Gas Nuclear (PSEG), the licensee. Salem 1 and 2 are both Westinghouse four-loop PWRs with a large, dry, atmospheric containment. The units rely on the containment spray system to reduce containment temperature and pressure immediately following a high energy line break in containment.

The following analytical and physical modification subject areas associated with the licensee's GL 2004-02 corrective actions are being audited:

a. break selection,
b. debris generation and zone of influence (ZOI),
c. debris characteristics,
d. debris source term,
e. coatings,
f. latent debris,
g. upstream design considerations (containment hold-up volumes and drainage),
h. debris transport and computational fluid dynamics (CFD),
i. head-loss and vortexing,
j. net-positive suction head (NPSH) margin,
k. screen modification package,
l. sump structural design (conducted as a desk audit at NRC Headquarters),
m. downstream effects on components and systems,
n. downstream effects on fuel and vessel, and
o. chemical effects.

1.2 Bulletin 2003-01 Responses

The Salem Unit 1 and Unit 2 response letter to Bulletin 2003-01, "Potential Impact of Debris Blockage on Emergency Sump Recirculation at Pressurized Water Reactors," dated August 6, 2003, and supplemented by response letters dated October 29, 2004, and September 15, 2005, described measures which were judged, by the NRC, to be responsive to and meet the intent of Bulletin 2003-01 in reducing interim risk associated with potentially degraded or nonconforming emergency core cooling system (ECCS) and containment spray system (CSS) recirculation functions. Bulletin 2003-01 discussed six categories of interim compensatory measures (ICMs):

a. training operators to identify and respond to sump clogging;
b. modifying procedures, if appropriate, to delay the switchover from refueling water storage tank (RWST) injection to containment sump recirculation (e.g., shutting down redundant pumps that are not necessary to provide required flows to cool the containment and reactor core, and operating the CSS intermittently);
c. ensuring an alternative water sources for refilling the RWST or otherwise providing water inventory to inject into the reactor core and containment spray system;
d. performing more aggressive containment cleaning and implementing a more rigorous foreign material control program;
e. ensuring containment drainage paths are unblocked; and
f. ensuring sump screens are free of adverse gaps and breaches.

In response to Bulletin 2003-01 [2], PSEG stated that Salem Unit 1 and Unit 2 have the following advantageous operating characteristics:

a. For smaller postulated loss-of-coolant accidents (LOCAs), the reactor coolant system (RCS) pressure remains above the residual heat removal (RHR) pump discharge pressure and containment spray (CS) is not actuated, thereby significantly reducing the rate of RWST drawdown. This feature makes it possible to depressurize the RCS to cold shutdown conditions before the RWST is drained to the sump recirculation switchover level; and

b. Makeup capability to the affected unit's RWST from the sister-unit's RWST. (Note: This feature is no longer available due to a revision to the applicable operations procedure S1(2) OP-SO.CVC-0023(Q))

PSEG further stated that Salem Unit 1 and Unit 2 had, or would shortly have, the following interim measures and continuing measures in place:

a. Emergency operating procedures (EOPs) which address transfer to cold-leg recirculation and the loss of recirculation capability, and which are exercised by operators during simulator training scenarios;

b. EOPs which direct operators to monitor 12 plant-specific instruments for indication of proper ECCS operation;

c. Loss-of-coolant accident (LOCA) procedures which direct the stoppage of one containment spray pump early in recirculation alignment to prolong the time available for the operators to establish cold-leg recirculation prior to RWST depletion;

d. EOP guidance for other than large-break LOCAs to delay depletion of the RWST before switchover to sump recirculation, including steps to cooldown and depressurize the RCS to reduce break flow, thereby reducing the injection flow necessary to maintain RCS subcooling and inventory, with safety injection pumps sequentially stopped to reduce injection flow and, therefore, RWST outflow;

e. Procedures for positive control of materials taken into the containment, with controls on plastic placement, paper tags and tool loss, and with containment inspection criteria to verify that no loose debris is present at containment closeout which could cause restriction at the containment sump suctions during a LOCA event;

f. Containment sump visual inspections every outage, and procedures to review the storage of "transient loads" (i.e., temporary equipment) in containment during power operation;

g. Planned outage cleanup activities to assure that containment housekeeping standards are met;

h. An end-of-outage walkdown inspection to verify that no loose debris is present in accessible places, with independent senior manager inspection tours of the containment, assessing cleanliness and loose debris status with emphasis on the issues raised in Bulletin 2003-01;

i. Routine vacuum cleaning and visual inspection of both the inner- and outer-annulus drain trenches;

j. Visual operability verification of the containment sump and its subsystem suction piping for loose debris and evidence of structural distress or corrosion, and verification that the sump components (trash racks and screens) show no evidence of structural distress or corrosion, with acceptance criteria for the interior mesh screens that they be intact and free of defects);

k. Additional staff training on the containment sump blockage issues of Bulletin 2003-01;

l. Enhancements to the Technical Support Center (TSC) integrated engineering response procedure to provide additional guidance on mitigating the effects of degraded ECCS pump performance due to sump blockage, with tabletop training sessions;

m. Updates to the Salem containment walkdown procedures to add emphasis based on the issues raised in Bulletin 2003-01;

n. EOP direction to stop two containment spray pumps if containment pressure has been reduced below the spray signal reset pressure;

o. Modification of the Salem transfer to cold-leg recirculation procedure to establish makeup to the RWST after the last operating containment spray pump is stopped;

p. Modification of the Salem containment sump blockage contingency actions procedure to provide additional makeup flow to the RCS from borated water;

q. Procedural modifications to provide additional makeup flow to the RCS from a borated water source after loss of recirculation capability due to sump blockage;

r. Procedural modifications to make monitoring of indications of sump blockage integral (rather than referenced) parts of Salem's procedures for transfer to cold-leg recirculation and loss of emergency recirculation; and

s. Procedural enhancements to provide additional guidance to the TSC staff on how to mitigate the effects of degraded ECCS pump performance if containment sump blockage is indicated or occurs. These procedural enhancements include additional guidance for determining whether one train of ECCS pumps should be shut down, whether one train of CSS should be shut down, whether RHR flow should be throttled/reduced, whether the Salem loss-of-emergency recirculation procedure should be entered, and whether the chemical volume control system positive displacement pump cross connection should be used to support the affected unit.

1.3 Generic Letter 2004-02 September 1, 2005 Response

As requested by GL 2004-02, PSEG provided a letter dated September 1, 2005, containing technical information regarding analyses to be conducted and modifications to be implemented as corrective actions for GL 2004-02. This section of this report summarizes a selected portion of the extensive quantity of information provided in the licensee's response.

The licensee stated that upon completion of activities related to modifications to the Salem 1 and 2 recirculation sump strainers, the Salem 1 and 2 ECCS and CSS recirculation functions under post-accident debris loading conditions would be in compliance with the regulatory requirements listed in the applicable regulatory requirements section of GL 2004-02.

The licensee stated that the Salem containment walkdowns, debris generation calculation, debris transport and head loss calculation, downstream effects evaluations for blockage, and the screen procurement specifications had been completed. However, the chemical effects evaluation was stated to be in progress and was scheduled to be completed once the test results to quantify the chemical debris effect on head loss had been published.

The licensee stated that the final designs of the strainers and the design change package finalizing the "as-modified" plant configuration were in progress, and that the final strainer design was expected to be issued by the spring and fall 2006 for Salem 2 and 1, respectively. The licensee further stated that evaluations had indicated that a new sump strainer with a surface area of approximately 1700 to 8500 sq ft with 0.083 (1/12) in. diameter perforations would be used, with the final area to be determined once the vendor designs were completed. This screen surface area was to include 500 sq ft of sacrificial area for tape, labels, etc. The licensee stated that installation of the new sump strainers was scheduled for the fall 2006 outage for Unit 2 and the spring 2007 outage for Unit 1.

The licensee stated that review of the physical plant layout in both containments was performed to ascertain any differences between the units that might affect calculations. The review concluded that both units have similar containment layouts. The licensee stated that where differences existed, the more conservative plant arrangements were used.

The licensee stated that breaks in feedwater system and/or main steam system piping were not considered in the evaluations because they do not require the ECCS and/or CSS to operate in recirculation mode.

The licensee discussed five major breaks understood to be significant at the time of the September 1, 2005, GL 2004-02 supplemental response (not identical to the eight breaks discussed in Section 3.1 below).

The licensee stated that, with the exception of Kaowool® and Transco Thermal Wrap® (Transco) fiber, insulation debris types were quantified using the ZOI radius specified in the NRC staff Safety Evaluation on NEI 04-07 [3]. Specifically, for Kaowool® and Transco® fiber, a ZOI radius equivalent to that of unjacketed Nukon ® (17.OD) was used, based on the guidance of NEI 04-07.

The licensee stated that the majority of the coatings inside of containment were procured and applied as qualified coatings, and that qualified coatings are controlled under site procedures. Unqualified coatings had been identified by location, surface area, and thickness. The majority of unqualified coatings inside of containment were component Original Equipment Manufacturer coatings, and that new or replacement equipment and components are evaluated for the potential for introducing unqualified coatings. The licensee stated that qualified coating debris had been quantified using the ZOI radius of ten pipe diameters (10.OD), as specified by the NRC staff Safety Evaluation on NEI 04-07. In accordance with NEI 04-07 and the NRC staff Safety Evaluation, all unqualified coatings were considered to fail regardless of their location within containment. Similarly, all qualified coatings that had been identified as being degraded were considered to fail regardless of their location within containment.

The licensee stated that the quantity and type of foreign material inside containment were based on a walkdown performed for Salem Unit 1. The foreign material included self-adhesive labels and placards. In the debris generation calculation, it was assumed that there was 200 Ibm of latent debris in the containment, although a latent debris walkdown taking 38 samples identified just 33 Ibm of latent debris.

The licensee stated that the means of transport considered were blowdown, washdown, pool fill and recirculation for all types of debris. The recirculation transport analysis was performed using CFD models developed using the computer program FLUENT. The CFD analysis

modeled scenarios both with and without flow through the inner and outer trenches in containment.

The licensee stated that fibrous debris (Nukon® and Kaowool®) was characterized into four debris size categories based on the interpretation of the Boiling Water Reactor (BWR) Owner's Group Air-Jet Impact Test (AJIT) data: fines (eight percent), small pieces (25 percent), large pieces (32 percent) and intact piece debris (35 percent). All fines were considered to transport to the screen, and a portion of the small and large fiber pieces were considered to transport to the screen. Insulation jacketing was calculated to not transport to the screen. Erosion was considered for pieces of fibrous debris that were not modeled to transport to the screen.

Coatings debris was modeled as fines and all of it was considered to transport to the screen.

The licensee stated that the Transco brand reflective metal insulation (MRI®) debris size distribution was 75 percent fines and 25 percent large debris, and that all MRI fines were considered to transport to the screen. A portion of the large MRI pieces were calculated to transport to the screen.

The licensee stated that miscellaneous foreign material debris (tape, labels, etc.) was not included in the debris load at the sump screen when determining debris bed head loss, but was considered in the screen design as a sacrificial area. All miscellaneous debris was considered to be 100 percent transportable.

The licensee stated that the screen size estimates were based on an allowable head loss of 3.15 ft with 0.33 ft of Net Positive Suction Head (NPSH) margin retained. Clean screen head loss was expected to be less than or equal to 0.1 ft.

The licensee stated that the strainer design specification requires that void fraction and flashing downstream of the sump screen and at the RHR pump inlet would not present a challenge. The bid specification was stated to require the strainers to be fully submerged for both large and small break LOCAs. The strainers also were to have a minimum of three (3) inches of water above the top of the strainer at switchover to sump recirculation.

The licensee stated that Salem uses Sodium Hydroxide (NaOH) as the sump pool pH buffer. The licensee stated that its sump strainer suppliers were then developing plans and schedules to quantify the additional head loss associated with chemical debris.

The licensee stated that, in general, the containment floors at Salem are clear of major obstructions that could prevent flow from reaching the containment sump screens, and that the configuration of the containment basement elevation is conducive to directing flow to the containment sump. The flow paths from the upper levels of containment to the lower levels consist of stairwells and grating around the containment perimeter. The licensee stated that holdup volumes not connected to the recirculation sump had been included in the minimum water level calculation. The refueling canal drains through a six-inch pipe and valve to the containment floor and from there to the sump. The valve is locked open during normal operation. Therefore, a credible path to the containment pool exists and there would be no hold up of water inventory in the refueling canal.

The licensee stated that the new passive strainer would be designed for the effects of weight, thermal, flow and seismic loading, and that the new strainer would not be subject to jet impingement, missiles or pipe whip during a LOCA.

The licensee stated that the new strainer design would ensure that gaps at mating surfaces within the strainer assembly and between the strainer and the supporting surface would not be in excess of the strainer hole size. Similarly, the design would ensure that drainage paths to the sump that bypass the sump screen would also be within the strainer perforation size.

The licensee stated that the flow paths downstream of the containment sump were analyzed to determine the potential for blockage due to debris passing through the sump screen. The acceptance criteria were based on WCAP-16406-P [4]. These evaluations were done for all components in the recirculation flow paths including, but not limited to, throttle valves, flow orifices, spray nozzles, pumps, heat exchangers, and valves. The licensee stated that long-term downstream evaluations were in progress, and that resolution and corrective actions for wear and clogging effects for the recirculation mission time would be performed.

The licensee stated that Westinghouse Corporation had performed a preliminary evaluation of the reactor vessel and internals using a sump screen hole size of 1/8-inch. The preliminary evaluation concluded that no blockage of critical flow paths (i.e., flow paths necessary to provide flow to and from the fuel) would occur. The licensee stated that a final evaluation of the potential for a combination of fibrous and particulate debris to impede flow into and through the core was being performed.

The licensee stated that the pre-existing sump design included a 6-inch high curb, and the need for trash racks would be determined during the detailed strainer design phase.

The licensee stated that no changes to the plant licensing bases were expected that would require NRC approval.

The licensee stated that insulation used inside of containment is identified on plant drawings. In addition, walkdowns to verify insulation types, quantities and their locations were performed to support resolution of GL 2004-02. The engineering modification process requires that materials introduced into containment be identified and evaluated for potential impact to the sump and equipment.

The licensee stated that at the end of each outage, a formal containment closeout surveillance procedure is performed. The closeout is performed to ensure that loose materials are removed and will not affect the ECCS including the sump. Items not removed require a documented evaluation to provide the basis for concluding that the item is acceptable to remain in containment. As part of containment closeout, each train of ECCS containment sump and sump screen is inspected for damage and debris. Also, refueling canal drains are verified to be unobstructed, and the refueling canal area is verified to be free of potential sources of debris that could obstruct the drains.

The licensee stated that it realized the importance of controlling potential debris sources inside of containment and that debris sources that are introduced to containment need to be identified and assessed. The licensee stated that it would ensure that potential quantities of post accident debris are maintained within the bounds of the analyses that support ECCS and CSS recirculation functions. The licensee stated that it would review and enhance the procedures associated with the foreign material exclusion (FME) processes, or provide new additional controls, as necessary, to ensure that the analyses that support ECCS and CSS recirculation functions remain valid. The licensee stated that reviews and enhancement to these processes

and associated procedures would be incorporated into plant procedures prior to December 31, 2007.

2.0 DESCRIPTION OF CHANGES

The Salem Unit 1 and Unit 2 containments each contain four RCS loops. Each loop consists of one steam generator (S/G), one reactor coolant pump (RCP) and the associated RCS piping. All four loops are located within a single annular bioshield wall. The pressurizer (PZR) and the pressurizer surge line piping are near steam generator 3 in each unit. Each Salem unit has two fully-redundant ECCS trains. Each train can provide adequate core cooling. Each train contains one high head charging/safety injection pump (C/SI), one intermediate head safety injection (SI) pump, and one low head or RHR pump. During the recirculation phase, the RHR pumps take suction from the containment sump and the C/SI and SI pumps take suction from the RHR discharge header downstream of the RHR heat exchanger.

The strainer physical modifications had been completed at the time of the site audit. The licensee had installed passive strainers manufactured by Control Components Incorporated (CCI) that have total screen surface areas of 4854 ft^2 and 4656 ft^2 for Units 1 and 2, respectively. The strainers are 27 inches tall with a minimum strainer submergence corresponding to a minimum calculated water level of three (3) inches [5]. The licensee also had installed a debris interceptor (also referred to as a trash rack) along the sump floor surrounding the approaches to the strainers to trap debris moving close to the floor, preventing such debris from reaching the strainers. The maximum flow through the single strainer module assembly for each unit for one RHR pump operation is 5110 gpm and 4980 gpm for Units 1 and 2 respectively, and 9000 gpm for two RHR pumps operating.

Other completed plant modifications include modifications to the biological shield wall doors, addition of covers over the containment floor drain trench, addition of redundant sump level switches, and change-out of insulation. A detailed discussion of these modifications is contained in Section 4 of this report.

3.0 BASELINE EVALUATION AND ANALYTICAL REFINEMENTS

3.1 Break Selection

The objective of the break selection process is to identify the break size and location that presents the greatest challenge to post-accident sump performance. Sections 3.3 and 4.2.1 of the NEI GR [6] and NRC Staff Evaluation (SE) [3] provide the criteria to be considered in the overall break selection process to identify the limiting break. The overall criterion used to define the most challenging break for recirculation operations is the resultant estimated head loss across the sump screen. Therefore, all phases of the accident scenario must be considered for each postulated break location: debris generation, debris transport, debris accumulation, and sump screen head loss. Two attributes of break selection that are emphasized in the approved evaluation methodology that can contribute to head loss are: 1) the maximum amount of debris transported to the screen; and 2) the worst combinations of debris mixes that are transported to the screen. Additionally, the approved methodology states that breaks should be considered in each high-pressure system that relies on recirculation, including secondary side system piping, if applicable.

The calculation report prepared for the licensee by Sargent & Lundy, “Debris Generation Due to LOCA within Containment for Resolution of GSI-191,” [7] documents the assumptions and methodology the licensee applied as part of the overall break selection process to determine the

limiting break for Salem. Six breaks were identified for detailed evaluation that would encompass the worst case situations. The specific breaks selected by the licensee were:

- Break S1: The hot leg pipe for steam generator (SG) #13 located about midway between the SG and the reactor pressure vessel (RPV).
- Break S2: The cold leg pipe for SG #13 located immediately downstream of the reactor coolant pump (RCP).
- Break S3: The hot leg pipe for SG #12 located about midway between the SG and the RPV.
- Break S4: Not Used
- Break S5: Not Used
- Break S6: The cold leg crossover pipe for SG #11 located adjacent to the SG.
- Break S7: The cold leg crossover pipe for SG #13 located adjacent to the SG.
- Break S8: The hot leg pipe for SG #13 located adjacent to the SG.

NRC Staff Audit

The NRC staff reviewed the licensee's overall break selection process and the methodology applied to identify the limiting break as presented in [7] and discussed the information with the licensee's analytical contractor during the onsite audit week.

Six breaks that would encompass the worst case situations were identified for detailed evaluation. The spectrum of breaks evaluated by the licensee was found to meet the intent of the GR and SE, as described below, and to be consistent with regulatory position 1.3.2.3 of Regulatory Guide 1.82, Revision 3. Rather than postulating break locations incrementally along the RCS piping (as recommended in the GR), the licensee selected characteristic breaks based on piping diameters and locations that generate the greatest amount and types of debris. This deviation from the staff-approved methodology was considered to be reasonable, based on the technical basis provided by the licensee.

Of the six identified breaks, three were in hot legs, one was in a cold leg and two were in cross-over legs. The crossover piping, with an inside diameter of 31-inch, is larger than the hot leg piping (29-inch ID) or the cold leg piping (27.5 inch). Therefore, the largest LOCA ZOIs are associated with breaks in the crossover piping.

The ZOIs associated with the two crossover breaks generally encompassed a larger portion of the SG compartments than would either the hot leg breaks or the cold leg break, primarily due to their larger diameter but also due to the higher elevation of the crossover break, allowing the ZOI to extend higher up inside the steam generator compartments, thereby affecting more of the steam generator insulation. Four of the six breaks were postulated to occur on the RCS loop piping containing the pressurizer so that these breaks would also impact the pressurizer insulation. The pressurizer is co-located with a steam generator. Due to the relatively small size of the pressurizer surge line, the debris generated by a break in the pressurizer surge line would be substantially less than the debris associated with the hot leg and cold leg breaks postulated for the co-located steam generator.

The evaluation of LOCA-generated coating debris demonstrated that the largest quantity of coating debris would be generated from equipment coatings and would be the greatest for breaks that directly impact the pressurizer.

The licensee determined that neither main steam line breaks nor feedwater line breaks would require containment sump recirculation; therefore, such breaks were not evaluated. Because the RPV is insulated with reflective metal insulation (RMI), RPV nozzle breaks were not considered as limiting case breaks based on the minimal transport and head loss characteristics of RMI debris. Also, a break at the RPV would be confined to inside the primary shield wall, thereby essentially generating only RMI debris. RMI debris generated by a nozzle break would not likely accumulate on the strainer in significant quantity, and even if the RMI were to accumulate on the strainers, it would likely not cause significant head loss at the low strainer approach velocities associated with the large Salem replacement strainers.

In accordance with the GR and SE, small-bore piping was not evaluated. Further, the licensee did not pursue the application of the alternate break methodology.

For reasons discussed above, the staff finds the licensee's break selection methods to meet the intent of the SE-approved methodology and, therefore, to be acceptable.

3.2 Debris Generation/Zone of Influence (Excluding Coatings)

The objective of the debris generation/ZOI process is to determine, for each postulated break location: 1) the zone within which the break jet forces would be sufficient to damage materials and create debris; 2) the amount of debris generated by the break jet forces; and 3) the size characteristics of the postulated debris. Sections 3.4 and 4.2.2 of the GR [6] and the NRC SE [3] provide the methodology to be considered in the ZOI and debris generation analytical process.

The GR baseline methodology incorporated a spherical ZOI based on material damage pressures. The size of the spherical ZOI is based on experimentally deduced destruction pressures that were determined by applying ANSI/ANS 58.2 1988 standard jet expansion models [8] to correlate the damage to insulation blankets or cassettes by air and steam jets during debris generation testing to an equivalent spherical model of destruction. The relationship between the ANSI/ANS 58.2-1988 standard and the NRC SE [3] approved ZOIs was assessed in Appendix I of the SE. Once the ZOI is established for a selected break location, the types and locations of all potential debris sources can be identified using plant-specific drawings, specifications, walkdown reports, or other such reference materials. The amount of debris generated is then calculated based on the amount of materials within the most limiting ZOI.

Section 4.2.2 of the SE discusses proposed refinements to the GR methodology that would allow application of debris-specific ZOIs. This refinement allows the use of a specific ZOI for each debris type identified. Using this approach, the amount of debris generated within each material-specific ZOI is calculated, and then these material-specific debris amounts are added to arrive at a total debris source term. The NRC staff concluded in its SE that the definition of multiple, spherical ZOIs at each break location corresponding to damage pressures for potentially affected materials is an appropriate refinement for debris generation. As discussed in Section 4.2.2 of the SE, the NRC staff accepted the application of these proposed refinements for PWR sump analyses for GL 2004-02 corrective actions.

The licensee's ZOI and debris generation evaluations and methods were presented in the licensee Calculation Report No. S-C-RHR-MDC-2039 [7]. In the Unit 1 containment, Nukon®, some of which is protected by steel jacketing, is used to insulate the steam generators and the pressurizer. In the Unit 2 containment, Nukon® is assumed to insulate the pressurizer bottom and is also used on the hot and cold legs adjacent to the RPV. Metal encapsulated and semi-encapsulated Kaowool® and/or Cera-Blankets® are used in both units to insulate the main steam, feedwater, RHR, SI, and chemical and volume control system piping. Generic fiberglass

is used to insulate component cooling and service water piping. Transco MRI® is used to insulate the reactor pressure vessels, the Unit 2 steam generators, and the feedwater and SG blowdown piping. Other metal reflective insulation, referred to simply as RMI, is used on the reactor coolant pumps and piping and the Unit 2 pressurizer. Some Min-K® insulation remains after completion of the insulation replacement program to reduce the inventories of Min-K®, which is located on the RCS piping. All calcium silicate was removed from any potential ZOI and replaced, primarily, with Transco MRI®.

The radii assumed by the licensee for insulation ZOIs are shown in Table 3.2-1. The values for the Transco MRI®, the unjacketed Nukon®, and the Min-K® were adapted directly from the SE.

Table 3.2-1 Salem Insulation ZOI Radii

Insulation Type	*ZOI Radius / Break Diameter*
Transco MRI®	***2.0***
Steel Jacketed Nukon® (Unit 1)	***8.0***
Unjacketed Nukon® (Unit 1)	***17.0***
All Nukon® (Unit 2)	***17.0***
Encapsulated Kaowool® and Cera-Blanket®	***17.0***
Generic Fiberglass	***17.0***
Min-K	***28.6***
RMI	***28.6***

NRC Staff Audit

The staff reviewed the licensee's ZOI and debris generation evaluations, as presented in the licensee Calculational Report No. S-C-RHR-MDC-2039 [7], and discussed the information with the licensee's analytical contractor, relying on the approved methods documented in Sections 3.4 and 4.2.2 of the staff's SE as an acceptance guide.

The jacketed Nukon® present at Salem Unit 1 is treated differently than the other Nukon® at the site. The licensee reduced the ZOI for the jacketed Nukon® at Unit 1 from the SE-approved 17D to 8D based on data from Westinghouse testing that was performed for the Wolf Creek nuclear power station. The debris generation calculation [7] shows that Nukon® is the largest source of fibrous debris for Unit 1. The importance of verifying the applicability of the 8D ZOI to the Salem Unit 1 jacketed Nukon® could not be assessed with the available documentation (e.g., if the assumed 8D was increased to 17D, how much additional fibrous debris would be generated compared to the current licensee bounding estimates?). The licensee referenced a Westinghouse test report, WCAP -16710-P, "Jet Impingement Testing to Determine the Zone of Influence (ZOI) of Min-K and NUKON® Insulation for Wolf Creek and Callaway Nuclear Operating Plants," Revision 0, dated October 2007 [9] to justify an 8D ZOI radius, but that report had not yet been received by the licensee and therefore was not available for staff review during the onsite audit. In addition, the licensee had initiated an analytical study to assess the structural comparability of the Salem Unit 1 Nukon® jacketing to the Wolf Creek Nukon® jacket system tested by Westinghouse, for which a preliminary draft report was made available for

staff review [10]. Subsequent to the onsite audit, the licensee provided the staff a copy of WCAP-16710-P. However, because the staff has not received a licensee-approved analytical study assessing the structural comparability of the Salem Unit 1 Nukon® jacketing versus the Wolf Creek Nukon® jacket system tested by Westinghouse, the staff has not evaluated the subject report. Therefore, the need for the licensee to justify the application of an 8D ZOI for jacketed Nukon® installed at Salem Unit 1 is designated as **Open Item 3.2-1**.

The Salem containments contain substantial quantities of insulation that is either metal encapsulated or semi-encapsulated, and the insulation contained within the encapsulations is either Cera-Blanket® or Kaowool®, with the majority being Kaowool® based on a licensee assessment of available documentation. The original insulation was Kaowool®, but some replacement insulation was specified in a technical standard as Cera-Blanket. The majority of the original insulation remains in place [11]. Because the licensee was unable to reasonably determine the exact insulation breakdown or the exact locations of different types of these two insulations, the licensee treated all of the encapsulated insulation as Kaowool®. The licensee stated that this was a conservative decision because: 1) the majority of the encapsulated insulation is Kaowool® rather than Cera-Blanket®; and 2) Kaowool® is denser than Cera-Blanket® so that the estimate of the quantities of postulated generated fine transportable fibrous debris would be greater for Kaowool® than for Cera-Blanket®. The staff accepted the analytical substitution of Kaowool® for Cera-Blanket® insulation at Salem as a conservative engineering judgment for the reasons stated by the licensee.

Because a ZOI has not been experimentally determined for Kaowool®, the licensee adopted the unjacketed Nukon® ZOI of 17D for Kaowool® on the conservative basis that: 1) Kaowool® is denser than Nukon®, i.e., 8.0 lbm/ft^3 compared to 2.4 lbm/ft^3, 2) a 17D ZOI effectively encompasses the SG compartment so that the majority of the encapsulated Kaowool® insulation was treated as debris, and 3) the metallic encapsulation would provide some protection to the Kaowool® that was not present when the unjacketed Nukon® was tested. This protection is difficult to quantify because the Salem encapsulation system cannot be directly compared to a metallic encapsulation that has been tested and because the ends of the semi-encapsulated jackets are open. The general concept that higher density insulations are tougher than lower density insulations has some merit, which is established by the debris size distributions of debris formed in a similar manner from materials of different density. This merit is illustrated by SE Figure II-8, which shows that less small and fine fibrous debris is generated for insulation types having higher established destruction pressures that roughly correlate to insulation densities. Further, as an example, it can be noted from the SE-accepted destruction pressures and ZOI radii found in SE Table 3-2, that the ZOI radius for the higher density Temp-Mat of 11.7D is substantially smaller than the corresponding 17D ZOI radius for unjacketed Nukon®. The staff accepted the 17D in the SE for use with the Salem Kaowool® based on the density argument and the fact that a ZOI larger than 17D would not have substantially increased the licensee-established bounding quantity of Kaowool® debris because the 17D effectively overlaps the total space within the bioshield wall.

The generic fiberglass at Salem consists of fiberglass insulation for which the type(s) cannot be determined using reasonable methods. To conservatively compensate for the uncertainty in the characterization of the generic fiberglass, the licensee assumed a conservative ZOI and bulk density for these materials. Based on the maximum fiberglass density listed in the GR (5.5 lbm/ft^3), the licensee assumed a bulk density of 6 lbm/ft^3 for the generic fiberglass, which, when simulated in the head loss tests using Nukon® fiberglass material, is expected to ensure that the licensee established a bounding quantity of fibrous debris. Because the volume of debris used in the test is based on an equivalent mass of fibrous insulation in the plant, the debris volume used in the test was conservatively increased by assuming a conservatively high

density for the plant's generic fiberglass. The licensee also adopted the unjacketed Nukon® ZOI of 17D for the generic fiberglass based on the concept that a higher density would likely in reality reduce the size of the ZOI, and that a 17D ZOI would effectively encompass the SG compartment, so that the majority of the generic fiberglass would be impacted (basically the same argument presented above for the Kaowool®). Further, it is noted that although there are considerable quantities of generic fiberglass in the containment inventories, the dominant fibrous materials in terms of debris generation are Nukon® for Unit 1 and Kaowool® for Unit 2. The staff accepted the licensee approach of assuming both a conservative ZOI and a conservative insulation density for the generic fiberglass as being conservative overall.

Two types of RMI are used in the Salem containment, Transco MRI® and a type referred to simply as metal reflective insulation. The licensee's ZOI for the Transco MRI® is the SE-accepted 2D, but the ZOI has not been experimentally determined for the other types of metal reflective insulation type. The licensee adopted the GR Mirror® brand ZOI of 28.6D because a 28.6D ZOI is so large that it effectively overlaps the total space within the bioshield wall. The staff accepted the licensee's approach for the RMI insulation in the Salem plant as being conservative for the reasons stated by the licensee.

Another potential small source of fibrous debris is the cover material on permanently installed lead shielding blankets placed within the containment to provide radiation shielding. The covers for these blankets are made of a material called alpha-maritex® cloth, which is fibrous and impregnated with a vinyl-like substance. Because these lead blankets are suspended without back support, the licensee expects that entire blankets would detach when impacted by a jet without completely disassembling so that the potential to generate substantial quantities of fibrous debris is minimal. However, the licensee conservatively assumed a nominal quantity of such debris in its debris source terms. The lead itself could form heavy metallic debris, but such debris would not effectively transport. The total inventory potential for lead cover fibrous debris ranged from 1.2 to 8.0 ft^3 depending upon the location of the break. Westinghouse subjected covered lead blankets to prototypical two-phase jet conditions to assess the potential generation of fibrous debris from these blankets [12]. The testing showed no evidence of separation of the blanket layers or catastrophic failure of the blankets. The quantity of fiber-reinforced plastic debris resulting from jet impingement on the lead blankets was exceedingly small and the densities of such debris were sufficiently high that pieces of the plastic layers would readily sink and not transport to the strainer. The testing results justified reducing the fibrous debris volume generated from this material to 1 ft^3. The staff accepted the licensee approach for the lead blanket fibrous covers as conservative for the reasons stated by the licensee and the reasons discussed above. The Staff noted that the total debris potential from the lead blankets was relatively small compared to the insulation fiber sources.

The licensee noted that there are no fire barriers or fire wraps inside containment.

The particulates that could accumulate on the Salem replacement strainers include Min-K® insulation debris, the coatings particulates, the latent particulates, and the chemical precipitants. The Min-K® debris evaluation used the SE-approved ZOI of 28.6D. The qualified coatings particulate debris evaluation assumed an industry-established 5D ZOI, along with a modest quantity of unqualified coatings debris (see Section 3.8 of this report for staff evaluation). The latent particulates were 85 percent of the conservatively assumed 200 lbm of latent debris (see Section 3.4 for staff evaluation). The licensee stated that the chemical precipitants were based on the NRC-sponsored Integrated Chemical Effects Test (ICET) Test #1 (see Section 5.4 for staff evaluation).

The licensee's bounding debris quantity estimates are summarized in Table 3.2-2 below. The following observations can be made from this table:

- The bounding debris estimates were the same for break selections S1, S2, S6, S7, and S8. All five of these breaks were located within the same side of the bioshield compartment. The primary reason for this outcome is that the relatively large ZOIs effectively overlap the total space within the bioshield wall. Another reason that contributes to the lack of variation among these breaks is symmetry of the insulation from one RCS loop to the next. The primary asymmetry is that the pressurizer is located on one loop but is within reach of all of the selected break locations except for Break S3, which is located inside the bioshield compartment but opposite the pressurizer. For Unit 1, the pressurizer is insulated with Nukon®, and for Unit 2, the pressurizer is insulated primarily with metal reflective insulation.
- The Min-K® insulation debris quantities differ significantly between Unit 1 and Unit 2. Although the quantity for Unit 1 may appear relatively minor, Min-K® debris is known to cause substantially greater head loss than a corresponding quantity of coatings or latent particulate, so even minor quantities need to be considered important in the head loss testing. The quantity of 24.5 ft^3 represents by far the largest source of particulate debris for Unit 2.

Table 3.2-2 Bounding LOCA-Generation Insulation Debris Quantities* (Less Coatings)

	Unit 1		*Unit 2*	
Debris Type	*Break S3*	*Other Break***	*Break S3*	*Other Break***
Metallic (ft^2)				
Transco MRI®	***0†***	***0†***	***3255***	***3255***
RMI	***33926***	***33926***	***31260***	***37685***
Fibrous (ft^3)				
Nukon®	***476***	***537***	***5***	***46***
Kaowool® and Cera-Blanket®	***128***	***128***	***116***	***116***
Generic Fiberglass	***45***	***45***	***47***	***47***
Particulate (ft^3)				
Min-K®	***5.3***	***5.3***	***24.5***	***24.5***

- With the exception of the Min-K®, these quantities include an additional five percent margin for conservatism. The Min-K® values include a 20 percent margin [11].
- **Other breaks included Breaks S1, S2, S6, S7, and S8, which all generated the same quantities of debris.

† Although Transco MRI® is installed in Unit 1, it is outside the ZOI for these postulated breaks.

The debris quantities associated with the breaks other than S3 represent the largest quantities of LOCA-generated insulation debris. Break S6 represents the break closest to the recirculation sump.

The staff reviewed the licensee's documentation supporting Table 3.2-2 and found no discrepancies. Further, the staff agrees, based on the approach described by the licensee's documentation, that the quantities of insulation in Table 3.2-2 associated with each break are bounding.

3.3 Debris Characteristics

The staff reviewed the Salem licensee's assumptions regarding the characteristics of post-accident debris to verify that the assumed characteristics were conservative or prototypical with respect to debris transport, debris bed head loss, and other areas of the sump performance analysis. The licensee's discussion of debris characteristics was primarily provided in the debris transport calculation [13] and also in the debris generation calculation [7].

The analyzed debris loading for Salem included Nukon®, Kaowool®, generic fiberglass, Min-K®, generic RMI, Transco reflective metallic insulation MRI® (Unit 2 only), qualified and unqualified coatings, latent debris, foreign materials, and fibrous debris from lead shielding blankets [13]. This section of this report describes the licensee's assumptions regarding the characteristics of these types of debris (with the exception of the characteristics of coatings debris, which are discussed separately in Section 3.7 of this report).

A summary of the assumed plant debris characteristics for non-coatings debris is provided below in Table 3.3-1.

Table 3.3-1 Summary of Assumed Characteristics for Non-Coatings Debris [13, 7]

Debris Type	*Size Distribution*	*Bulk Density (lbm/ft^3)*
Nukon® (Unit 1)	*25% Fines*	*2.4*
	75% Small Pieces	
Nukon® (Unit 2)	*15% Fines*	*2.4*
	45% Small Pieces	
	40% Large Pieces	
Kaowool®	*15% Fines*	*8*
	45% Small Pieces	
	40% Large Pieces	
Generic Fiberglass	*100% Fines*	*6*
Min-K®	*100% Fines*	*16*
Mirror® RMI	*75% Small (< 4 inches)*	*N/A*
	25% Large (≥ 4 inches)	
Transco MRI®	*100% Small (< 4 inches)*	*N/A*
Latent Fiber	*100% Fines*	*2.4*
Latent Particulate	*100% Fines*	*168.6*
Foreign Materials	*100% Intact Sheets*	*N/A*
Fiber from Lead Blankets	*100% Fines*	*6*

3.3.1 Nukon®

As discussed in detail in Section 3.2 of this report, the licensee assumed that the Unit 1 jacketed Nukon® (low-density fiberglass insulation) has a ZOI of 8D and the unjacketed Nukon® has a ZOI of 17D. For Unit 2, the licensee assumed that both jacketed and unjacketed Nukon® have a ZOI of 17D [13, 7]. The licensee stated that the ZOI for the jacketed Nukon® at Unit 2 was assumed to be 17D to conservatively maximize the quantity of generated debris. As clarified below, the licensee assumed different size distributions for the Nukon® debris generated at Units 1 and 2 that were ultimately based on the different ZOI assumptions made for the two units [13].

The Unit 1 size distribution of 25 percent fines and 75 percent small pieces for Nukon® was based upon testing completed during the Drywell Debris Transport Study [27] that is referenced in Appendix II to the staff's safety evaluation (SE) [3] on NEI 04-07 [6]. This size distribution cannot be directly compared to the SE Table II-2 value of 22 percent because this distribution was derived for an 8D, rather than a 17D ZOI. This licensee distribution is conservative because (1) the distribution does not take credit for any large or intact pieces of debris and (2) the 25 percent value for fines is on the conservative end of the range for fines found in the NRC-sponsored testing referred to as the Drywell Debris Transport study [27]. In those tests, blankets of Transco fiberglass were destroyed so that the majority of the debris was either fines or small pieces. Fifteen to 25 percent of the blanket insulation became fines. The staff, therefore, finds the licensee's size distribution for Nukon® at Unit 1 to be acceptable for application to an 8D ZOI. Further, since the volume averaged destruction pressure within the 17D ZOI is lower than that for 8D, the staff considers the Unit 1 size distribution to have added conservatism when applied to a 17D ZOI.

The Unit 2 size distribution of 15 percent fines, 45 percent small pieces, and 40 percent large pieces for Nukon® in a 17D ZOI was also based upon guidance from the staff's SE. In accordance with the SE guidance, the licensee assumed that 40 percent of the debris would be destroyed into large pieces and that 60 percent of the debris would be destroyed into fines and small pieces. The licensee further divided the aforementioned 60 percent into 15 percent fines and 45 percent small pieces based upon the discussion in Appendix II to the SE [3] that is summarized above. The licensee conservatively assumed that none of the destroyed Nukon® would remain in the form of intact pieces. The staff considers the licensee's size distribution for Nukon® at Unit 2 to be appropriate because it follows the SE [3] guidance concerning the size distribution between fines, small pieces, and large pieces of debris, and it conservatively omits the generation of intact pieces of debris.

The staff considered the bulk density of 2.4 lbm/ft^3 assumed for Nukon® to be acceptable because it is consistent with the value provided in the staff's SE and other technical references.

3.3.2 Kaowool®

Similar to the discussion above for Nukon® within a 17D ZOI, the licensee assumed a size distribution of 15 percent fines, 45 percent small pieces, and 40 percent large pieces for Kaowool® debris (for which the assumed ZOI was also 17D) [13]. The licensee's basis for this assumed size distribution was destruction testing performed with Nukon® insulation and the argument that this testing is conservative with respect to Kaowool® because the bulk density of Kaowool® is greater than that of Nukon®. As a result of its density being greater than that of Nukon®, the licensee stated that it is probable that the size distribution of destroyed Kaowool® will contain a conservatively lower proportion of fines than Nukon® when subjected to a given jet pressure.

There is evidence that a rough correlation may exist between the increasing density of a fibrous insulation and its resistance to damage from a LOCA jet (e.g., see Figure II-8 from Appendix II to the staff's SE [3] on NEI 04-07 [6]). However, there are other variables that may have greater significance with respect to the distribution of debris sizes, including the binding method (e.g., organic binders, mechanical stitching), the binding strength, the jacketing strength, and the type of fiber. For example, as discussed in the audit report for San Onofre Nuclear Generating Station [14], the staff's review found past evidence that mineral wool may be destroyed into finer fragments by a LOCA jet than would Nukon® debris, despite having a higher density.

Based on the discussion above, the staff does not consider the licensee's justification to be complete. However, the staff considered the licensee's assumed size distribution for Kaowool® to be reasonable when the additional information described below is also considered. First, the staff compared the licensee's assumed size distribution for Kaowool® with data from air jet testing with K-Wool in Volume 3 of the Utility Resolution Guidance for ECCS Suction Strainer Blockage prepared by the Boiling Water Reactor Owners' Group [15]. K-Wool and Kaowool® are both ceramic fibers, as opposed to Nukon®, which is composed of glass fibers held together with organic binder. The characteristics assumed by the licensee for Kaowool® (with a 17D ZOI) appear reasonable based on similarity to the test results for K-Wool. Second, the licensee's neglect of the generation of intact pieces of debris provides a significant degree of conservatism to the assumed size distribution for Kaowool® debris. Thus, all non-transportable pieces of Kaowool® generated by a LOCA are conservatively assumed to be subjected to the effects of erosion in the containment pool. Therefore, the staff considers the licensee's assumed size distribution for Kaowool® to be reasonable.

The licensee stated that the bulk density for Kaowool® debris should be assumed to be 8 lbm/ft^3. This assumed density is based upon licensee records which indicate that Kaowool® denser than 8 lbm/ft^3 has not been installed at the Salem since 1994, the earliest year for which records were available. NEI 04-07 [6] states that the density of Kaowool® may vary between 3 and 12 lbm/ft^3. From the standpoint of generating a conservatively large quantity of debris, assuming a density toward the higher end of the applicable range is conservative. The staff considers the licensee's assumption that the Kaowool® installed at Salem has a density of 8 lbm/ft^3 to be a reasonable estimate, based upon the existing records maintained by the licensee. The staff calculated the potential added mass of Kaowool® debris reaching the strainer if the density of all of the Salem Kaowool® were 12 lbm/ft^3—a worst-case value for Kaowool® density. This theoretical condition added only approximately five percent to the mass of all fibrous debris reaching the Unit 1 strainer (which bounds Unit 2).

3.3.3 Generic Fiberglass

As a result of the lack of detailed material characteristics information for generic fiberglass at Salem, the licensee assumed that 100 percent of the debris generated from generic fiberglass becomes fines [13]. Since fine debris tends to be most problematic with respect to transport and strainer head loss, the staff considers the licensee's assumption of 100 percent fines for generic fiberglass to be conservative.

The licensee assumed that generic fiberglass insulation has a bulk density of 6 lbm/ft^3 [7]. The licensee's basis for this assumption is that the most dense fiberglass insulation considered in NEI 04-07 had a density of 5.5-lbm/ft^3 [7]. The licensee further stated that the properties of Nukon® fiber should be assumed when addressing the head loss behavior of this debris.

The staff considers the licensee's assumption that generic fiberglass has a density of 6 lbm/ft^3 to be conservative with respect to debris generation because this assumption maximizes the mass of generated debris. The staff also agrees that it is reasonable that the licensee use Nukon® as a surrogate material for generic fiberglass for the purpose of head loss testing because Nukon® is a representative brand of low-density fiberglass insulation and because potential uncertainties associated with the use of Nukon® as a surrogate appear to be bounded by conservative assumptions associated with the mass of the fiberglass debris and the assumed debris size distribution of 100 percent fines. The conservatively high density assumed for generic fiberglass did not have a non-conservative effect on the debris transport calculation because the licensee assumed that generic fiberglass debris is 100 percent fines that fully transport to the sump strainer. Therefore, the staff considers the assumed density of 6-lbm/ft^3 to be conservative for generic fiberglass.

3.3.4 Min-K®

In accordance with Section 3.4.3.3 of the staff's SE [3] on NEI 04-07 [6], the licensee assumed that 100 percent of the generated Min-K® debris will become fines [13]. The staff considers the licensee's assumption to be acceptable because it is consistent with the staff's SE.

The licensee assumed that the density of Min-K® debris is 16-lbm/ft^3. Based upon manufacturer's data sheets for Min-K® provided by the licensee [16], the staff concluded that the assumed density is appropriate for Salem.

3.3.5 Mirror Reflective Metallic Insulation

The licensee stated that the size distribution assumed for Mirror® RMI was 75 percent pieces smaller than four inches. This size distribution is based upon Section 3.4.3.3.2 of NEI 04-07 [6]. The licensee stated that this size distribution was originally based upon destruction data shown in NUREG/CR-6808, "Knowledge Base for the Effect of Debris on Pressurized Water Reactor Emergency Core Cooling Sump Performance." [17] The staff considers the licensee's size distribution for Mirror® RMI to be acceptable because it is in accordance with NEI 04-07 guidance that was approved in the staff's SE [3].

3.3.6 Transco Metal Reflective Insulation

The licensee stated that the size distribution assumed for Transco MRI® was 100 percent small pieces of less than four inches [13] rather than the 75 percent value in the staff's SE [3]. This finer distribution was chosen for Transco MRI® (as opposed to Mirror® RMI) because of its increased destruction pressure (114 psi at a distance of two pipe diameters from the break), based upon the principle that the higher destruction pressures operating close to the break tend to lead to more finely fragmented debris. The staff considers the licensee's size distribution for Transco MRI® debris to be acceptable based on the physical principle described above and because smaller pieces of debris are generally more transportable than larger pieces.

3.3.7 Latent Fibrous Debris

The licensee modeled latent fibrous debris as being 100 percent fines that are transportable to the sump strainer [13]. The staff considers this size distribution to be acceptable because it is consistent with the staff's SE [3] on NEI 04-07 [6].

The licensee assumed that the bulk density of latent fibrous debris is 2.4-lbm/ft^3 and stated that low-density fiberglass was used as the surrogate debris for latent fibrous debris. The bulk density of 2.4-lbm/ft^3 for latent fibrous debris was approved in the staff's SE on NEI 04-07, and is, therefore, acceptable. The use of fines from a low-density fiberglass, such as Nukon®, as a surrogate debris for latent fiber in head loss testing is acceptable because this practice was also

considered appropriate in the staff's SE [3], as discussed in Section 3.5.2.3 and Appendix VII of that document.

3.3.8 Latent Particulate Debris

The licensee modeled latent particulate debris as being 100 percent fine particulate that is transportable to the sump strainer. The staff considers this size distribution to be acceptable because it is consistent with the staff's SE [3] on NEI 04-07 [6].

The licensee assumed that the bulk density of latent particulate debris is 168.6 lbm/ft^3. This bulk density is acceptable because it is consistent with the value approved in the staff's SE [3] on NEI 04-07[6].

3.3.9 Foreign Materials

The licensee stated that, since no data is available concerning the transport and disintegration of foreign materials such as labels and placards, these materials would be treated as fully transporting to the sump strainer as intact pieces. The licensee stated that this position is consistent with guidance in the staff's SE in Section 3.5.2.2.2 [3]. Based on other guidance in the SE, the licensee accepted a reduction in strainer area equal to 75 percent of the original single-sided area of the foreign materials to account for the blockage created by foreign materials.

The licensee's assumed characteristics for foreign materials are acceptable because they are consistent with guidance in the staff's SE [3].

3.3.10 Fiber from Lead Blankets

The licensee stated that fibrous debris from the permanent lead shielding blankets was considered to be similar to the generic fiberglass discussed above in Section 3.3.3, with 100 percent transport to the sump strainers [13]. The staff considers this licensee position to be reasonable because the quantity of lead shielding blanket fiber is very low (approximately one (1) cubic foot), and the relatively small amount of fibers from these blankets would tend to be spread throughout the strainer debris bed as a result of debris generation, transport, and accumulation processes. Therefore, the material properties assumed for the fibers from lead blankets would not be expected to have a great influence on the head loss of the debris bed. Based upon the staff's evaluation of the assumed properties for generic fiberglass above in Section 3.3.3 (for example, the lead blanket fibrous material being treated as having 100 percent transportability), the staff considers these assumed properties to be conservative for fiber from lead blankets.

3.4 Latent Debris

3.4.1 Scope of Audit

Latent debris is unintended debris present in containment prior to a postulated high-energy line break, which may be composed of various constituent materials including dirt, dust and other particulate, paint chips, fiber, pieces of paper, tags, plastic, tape, adhesive and non-adhesive labels, and fines or shards of thermal insulation or fireproof barriers. The objective of the latent debris evaluation is to provide an estimate of the types and amounts of latent debris existing in containment for the purpose of assessing its impact on sump strainer head loss. The licensee performed an evaluation of the potential sources of latent debris within containment using the guidance provided in NEI 04-07 (GR) [6] and the associated NRC staff safety evaluation (SE) [3].

References [3] and [6] provide baseline guidance for assessing and quantifying the mass and characteristics of latent debris inside containment as follows: (1) estimate the total area available in containment for latent debris deposition, including both horizontal and vertical area contributions, (2) survey the containment to determine the mass of debris present, (3) determine the fraction of total area that is susceptible to debris buildup, (4) calculate the total quantity and composition of debris in containment, and (5) define the debris composition and physical properties. These elements of the latent debris evaluation process are addressed in references [18, 19, and 20].

3.4.2 Latent Debris Sampling Methodology

Dust, Particulate, Lint

The licensee's latent debris walkdown plan [18, Attachment 8.1] outlines the process for evaluating the latent debris mass found in the Salem 2 containment. A latent debris walkdown of the Salem Unit 1 containment was not performed. Instead, the licensee assumed that the results of Salem Unit 2 also apply to Salem Unit 1. The results based upon Unit 2 walkdown are acceptable for Unit 1 because the containment cleanliness program is applicable to both units and because of the conservatism used in the calculation.

The surface areas within Salem Unit 2 containment that are available for accumulation of latent debris were identified, and seven surface-area categories were defined. Then, after accounting separately for horizontal and vertical surface configurations, a final total of eleven area types were defined. The surface area of each of the eleven area types was computed with the aid of plant drawings. All of the individual area contributions were tabulated in Appendix A of the latent debris calculation [18], where the physical sample locations are also identified.

The latent debris mass, including dust, particulate and lint, was evaluated using a total of 38 samples. A minimum of three samples was specified to characterize the mass of debris for each area type, as recommended by the NRC SE [3]. The specific sample locations are identified in the licensee's latent debris calculation report [18]. At each location, a pre-weighed cloth was used to swipe or scoop debris from surface area samples ranging from 1.5 ft^2 and 31.42 ft^2. The difference of the cloth's weight before and after the collection of the sample represents the weight of the sample. All of the measured weights were made with a calibrated balance with weight measured in grams with a resolution of 0.01 gram. The sampled debris masses were generally greater than 0.1 gram. The uncertainty of ± 0.01 gram leads to an acceptably small uncertainty in the computed latent debris mass.

For each of the eleven area types, the measured sample masses and the surface area sampled were used to compute the mean sample mass per unit area, the standard deviation of this quantity, and the 90 percent confidence limit of the quantity. The 90 percent confidence limit was conservatively used instead of the sample mean to calculate the representative latent debris sample mass per unit area for each specific area type sampled. For the case of three specific area types (gratings, vertical cable trays and horizontal ducts), the minimum three samples were not taken. The gratings were conservatively considered as part of the total containment floor area, and the floor areas samples were used to represent the grating latent debris mass. For vertical cable trays and horizontal ducts, accessibility limited the number of debris samples. For these cases the data were supplemented by using debris masses taken from other area types, which were assumed to be similar in their ability to collect debris. In these cases vertical surface data were applied to vertical surfaces, and horizontal data were applied to horizontal surfaces. This assumption is judged reasonable by the staff because the

mass of debris collected generally is larger for the horizontal surfaces, and this distinction was preserved in the licensee's approximation.

The total mass of latent debris present in containment on each of the eleven area types was estimated from the measured debris masses by multiplying the computed sample mass per unit area by the estimated surface area of containment associated with the specific area type. The masses identified with each area type were summed to provide the total latent debris mass in containment.

NRC Staff Audit

The sampling methodology for measurement of latent debris mass and the statistical analysis performed as summarized above follows the guidance of NEI 04-07 [6] and the NRC SE [3]. In place of the sample mean for each area type, the licensee conservatively used the 90 percent confidence limit. Additional margin was added to the latent debris mass as added conservatism. This is discussed further in Section 3.4.3. For these reasons, the staff finds the methodology to be conservative and acceptable.

Foreign Materials

The staff reviewed the licensee's walkdown plan for foreign materials [19] and the licensee's report of the quantitative results of this walkdown [20]. The methodology used for Salem 1 and Salem 2 are identical.

The walkdowns of the Salem 1 and Salem 2 containments considered all self-adhesive labels and placards as potential sources of debris that could be transported to the sump screen. The total of the individual label and placard areas for each unit was calculated. The labels and placards are located on conduits, cable trays and junction boxes. Plant drawings were used to identify the number and size of these tagged items, and the total area of the labels and placards was computed based on the total number of tagged items. These materials were assumed to be transported to the sump screen. The licensee's methodology for estimating quantities of foreign material is acceptable because it accurately maximizes the area of labels and placards in the containment that may reach the strainers.

NRC Staff Audit

The licensee did not inventory the quantity of broken bulb glass that could be shattered and transport to the containment pool during a LOCA because of its non-transportability. In the judgment of staff, this debris would indeed be too dense to transport to the strainers if it does reach the containment pool. The staff therefore concludes that neglecting the glass as debris that reaches the strainers is acceptable.

3.4.3 Latent Debris Mass and Foreign Materials Results

Latent Debris Mass

The results of the licensee analysis for latent debris mass and the quantity of tags and labels in containment, etc., are presented in Table 3.4-1. The total quantity of latent dirt, dust and lint computed from the Unit 2 sample measurements and surface areas is 33 lbm [18, p.10]. This quantity includes a conservatism that uses the 90% confidence limit for the mass of latent debris in place of the sample mean. The total quantity that was conservatively specified in the sump screen design and for head loss testing of the strainer is 200 lbm [7]. For the head loss testing a scaled fraction of the 200 lbm was specified. This latent debris mass content is specified as

85 percent particulate and 15 percent fiber [22, p.17]. This is consistent with the guidance in the NRC SE [3].

The staff concludes that the estimate of 200 lbm for the latent debris mass is conservative as an estimate of the latent debris mass in both Salem 1 and Salem 2 containments. While the sampling and calculations were performed for Salem 2, staff also accepts the results as applicable to Salem 1 because the containment cleanliness and foreign materials inspections programs are the same for both units [23, 24] and, because a very conservative debris mass was specified by the licensee relative to the calculated quantity.

Foreign Materials

Table 3.4-1 presents the results of the licensee's inventory of foreign materials that is used as the sacrificial area for the sump strainer design. All labels and placards were conservatively assumed to be transportable to the containment sump. One-hundred percent of the sum of the areas of the individual debris pieces was taken as the total area of labels and placards. The staff considers this methodology to be acceptable because it conservatively accounts for the inventory of labels and placards in containment. Potential glass breakage as a source of sacrificial area was not included. However, staff considers that broken glass would not be transportable to the sump screen. The estimate of foreign materials, therefore, is considered acceptable.

Table 3.4-1 Salem Latent Debris and Foreign Material Results

Latent Debris and Foreign Material	Quantity	Type
Dirt, Dust, and Lint (Applicable to Units 1 and 2)	33 lbm calculated for Unit 2 (200 lbm specified for strainer head loss testing)	Latent Debris (Assumed 15% Fibrous and 85% Particulate)
Labels and Placards Unit 1 Unit 2	 572.3 ft 525 ft	Foreign Material

3.5 Debris Transport

Debris transport analysis estimates the fraction of post-accident debris that would be transported to the sump suction strainers during a LOCA or other high-energy line break requiring containment sump recirculation. Generally speaking, debris transport in the containment can be considered to occur through four primary mechanisms:

- blowdown transport, which is the vertical and horizontal transport of debris throughout containment by the break jet;

- washdown transport, which is the downward transport of debris due to fluid flows from the containment spray and the pipe rupture;

- pool-fill transport, which is the horizontal transport of debris by break flow and containment spray flow to areas of the containment pool that may be active (influenced by recirculation flow through the suction strainers) or inactive (hold-up or settling volumes for fluid not involved in recirculation flow) during recirculation flow; and

- containment pool recirculation transport, which is the horizontal transport of debris from the active portions of the containment pool to the suction strainers through pool flows induced by the operation of the ECCS and CSS in recirculation mode.

Through the blowdown mechanism, some debris would be transported throughout the lower and upper containment. Through the washdown mechanism, a fraction of the debris in the upper containment would reach the containment pool. Through the pool fill-up mechanism, debris on the containment floor would be scattered to various locations, and some debris could be washed into inactive volumes which do not participate in recirculation. Through the recirculation mechanism, a fraction of the debris in the active portions of the containment pool would be transported to the suction strainers, while the remaining fraction would settle out on the containment floor.

The staff reviewed the debris transport analysis for Salem, which was primarily contained in the licensee's debris transport calculation [13]. The debris transport calculation stated that the transport methodology used for Salem is based on the methodology in Nuclear Energy Institute (NEI) 04-07 [6], as modified by the associated NRC Safety Evaluation (SE) [3], and Regulatory Guide (RG) 1.82 [26].

The licensee's debris transport methodology [13] used baseline methodology assumptions from Section 3.0 of NEI 04-07 [6] and analytical refinements from Section 4.0 of NEI 04-07 [6]. One transport refinement was that the licensee used FLUENT, a computational fluid dynamics (CFD) code, to model the flow of water in the containment pool during the recirculation phase of a LOCA. The following subsections discuss the licensee's overall transport methodology, noting specific issues the NRC staff identified during the audit review.

3.5.1 Blowdown and Washdown Transport

The licensee stated that, since all of the analyzed breaks are located inside the bioshield wall underneath the operating floor (plant elevation 130 ft), the most likely way for debris to reach the strainer by blowdown and washdown transport is to be blown into the upper containment through openings around the steam generators and then be washed down by containment spray through the floor grating above the strainer [13]. The licensee stated that this path is feasible for debris that is sufficiently small to pass through grating openings (e.g., fines, some small debris pieces, coating debris, latent debris, etc.).

The licensee stated that significant debris transport directly to the sump strainer via blowdown would not likely occur through the four doorways in the bioshield wall [13]. Specifically, the licensee stated that one of the bioshield doors is on the opposite side of the containment building from the sump, and the other doors are oriented such that exiting debris would either be blown away from the strainer or would be incapable of maneuvering through the series of turns necessary to exit the bioshield and arrive at the sump strainer.

The licensee stated that debris that is ejected into the upper containment during the blowdown phase can be washed down into the containment pool through floor drains, the openings around the steam generators, the refueling canal drain line, or gratings over the outer annulus between the bioshield wall and the containment wall. The licensee stated that all debris blown into the upper containment is initially assumed to be distributed uniformly over the operating floor area in the final calculation. The licensee considered this assumption not to be representative of the probable locations of debris because most of the debris would likely be blown toward the middle of the containment building (since the containment dome provides the largest free volume). However, the licensee stated that, since the grating around the edge of one quadrant of containment is the only pathway for debris to wash directly down onto the strainer, assuming uniform deposition of debris across the operating floor increases the calculated quantity of debris near the outer edge of the containment. This would result in an increase in the amount of debris directly washing down onto the strainer, and is therefore conservative. Based upon an evaluation of the floor area at the operating deck elevation, and potential drainage locations on the operating floor, the licensee calculated that the quantity of debris washed to the floor grating above the sump strainer is 20 percent of the debris that is ejected into the upper containment during the blowdown phase of a LOCA.

Using experimental data from the NRC's Drywell Debris Transport Study [27], the licensee stated that 25 percent of all small fiber pieces are expected to become trapped when passing through a layer of floor grating. Thus, the licensee stated that the two layers of grating between the operating deck and the containment pool would permit 56.25 percent of small pieces of debris that are washed onto the grating directly above the strainers to fall directly onto the strainers [13]. The licensee did not ultimately credit the two layers of grating above the strainers with retaining the remaining 43.75 percent of the small pieces of debris; instead, these pieces of small debris were conservatively considered to fall to the containment floor upstream of the debris interceptors, rather than being trapped permanently on the grating. All fine debris reaching the two layers of grating was assumed to pass through the gratings. Considering the geometry of the radiant energy shields above the strainer, the licensee determined that most of the washed-down fines and small pieces of debris would end up behind the strainer (i.e., between the strainer and the containment wall).

Based upon the information provided by the licensee concerning the physical geometry and layout of the containment, the staff considered the licensee's assessment of blowdown and washdown transport to be consistent with the regulatory guidance in the staff's SE on NEI 04-07 [3]. For the purpose of analyzing debris transport to the sump strainer, the staff further considered it conservative that, although gratings were used to determine the spatial distribution of debris washing down into the containment pool, the licensee did not credit the capture of debris on gratings and other structures in the upper containment. As a result, the quantity of debris available for transport to the sump strainer is conservatively maximized.

While not crediting capture of debris on gratings and other structures in the upper containment is conservative with respect to sump strainer sizing, without adequate technical justification the staff would not consider the assumption that no debris is captured in the upper containment to be generally acceptable for other purposes, such as analyzing the susceptibility of the refueling cavity drains (or other choke points in containment) to debris blockage. In particular, the staff noted that Salem does not appear to have a complete level of grating between all postulated break locations and potential upstream hold up points such as the refueling canal drain. Potential blockage of drainage flow paths in containment and other upstream effects are addressed in Section 5.2 of this audit report.

3.5.2 Pool-Fill Transport

The licensee did not create a detailed model of debris transport resulting from shallow, high-velocity sheeting flows that may occur during the pool fill-up phase. Rather, the licensee considered transport directly to the strainer during the pool-fill phase to be insignificant because the stairwells from the bioshield to the outer annulus are directed away from the sump strainer, as discussed above [13]. The licensee's transport calculation also indicates that the containment floor slopes slightly downward away from the strainers away from the containment wall. The licensee's transport calculation further describes the strainer as being located above the containment floor, rather than in a pit below the floor level.

Based upon the information provided by the licensee, the staff considered the neglect of pool-fill transport to be reasonable for Salem. Specifically, the licensee's statements that the bioshield doors direct flow away from the strainer indicate a reduced potential for debris to be directed toward the strainer during pool fill-up. In addition, the licensee's statement that the strainer is located above the containment floor and that the containment floor does not slope downward toward the strainer from the direction of the bioshield wall provides confidence that high-velocity sheeting flows of water will not be preferentially directed toward the strainer. A 9.125-inch-tall debris interceptor located upstream of the strainer provides an additional barrier to prevent the transport of small and large pieces of debris to the strainer via shallow sheeting flows. As a result of the features described above, the staff's review did not identify the potential for significant quantities of debris to transport to the sump strainer during the filling of the containment pool early in the injection phase of the accident. Therefore, the staff considered the licensee's treatment of pool-fill transport to be acceptable.

3.5.3 Containment Pool Recirculation Transport

The licensee computed flow velocity and turbulence fields in the containment pool during the recirculation phase of a LOCA with the aid of the FLUENT CFD code [13]. As described in more detail below, the licensee compared the flow velocities resulting from the CFD simulations to experimentally generated debris transport thresholds to determine the quantity of debris reaching the containment recirculation sump strainer. The staff's discussion below evaluates the licensee's assumptions, analytical models, and calculations associated with determining the containment pool recirculation debris transport percentages, including a summary of the CFD simulations performed by the licensee.

3.5.3.1 Pool Recirculation Transport Scenarios Analyzed

The licensee performed a total of 14 CFD simulations using the FLUENT code (as discussed below), including:

(1) Scenarios 1 through 5, which modeled the original sump screen configuration, a containment pool depth of 3ft-8in., all containment stairways open, no debris interceptors, and various trains of containment spray and safety injection pumps operating;

(2) Scenarios 6 through 12, which modeled various proposed strainer and debris interceptor designs, a containment pool depth between 2ft-6in. and 2ft-10in., various containment stairways blocked by post-accident debris, and various trains of containment spray and safety injection operating; and

(3) Scenarios 13 and 14, which modeled the installed replacement sump strainer and debris interceptors, a containment pool depth of 2ft-10in., the containment stairway nearest

the strainer blocked by post-accident debris, containment sprays, and both single- and dual-train safety injection.

Since only the last two scenarios reflect the installed replacement strainer and debris interceptor configuration, these were the two cases used by the licensee in calculating debris transport percentages. Therefore, the staff's review focused upon these last two cases, Scenario 13 (single-train flow) and Scenario 14 (dual-train flow).

Summary of CFD Model

The licensee used version 6.1.22 of the FLUENT code for all of the simulations conducted for Salem. The licensee stated that the computational mesh for the simulations was initially composed of 157,083 cells; however, during the course of conducting the simulations, additional computational cells were added to refine the mesh in order to capture details of the flow pattern. The licensee stated that in the end the total number of cells used in the simulations conducted for Salem ranged between 1,675,000 and 1,700,100 cells. The licensee stated that the characteristic length of the computational cells ranged between approximately 0.4 inch (in containment pool regions considered to be of the most importance) and 11 inches (in regions where flow details were not considered important).

The containment pool surface was modeled as a rigid, frictionless lid [13]. However, as flow passes over the strainer, the licensee stated that some change in the height of the water can be expected. To justify the assumption of using a rigid lid model for the pool surface, the licensee stated that the Froude number was examined in the vicinity of the strainer and found to be less than 0.3 in Scenarios 13 and 14. The licensee stated that, for values of Froude number in this range, changes in water height are expected to be minimal. The staff considered this statement reasonable and further noted that relatively small differences in water height are not expected to have a significant impact on floor-transporting debris.

Modeling of Flow Exiting the Bioshield Wall

The two CFD cases of interest nominally modeled Break S1, a 29-inch hot-leg break on the piping associated with Steam Generator #13 [13]. However, as noted in Attachment 8.2 to the debris transport calculation [13], the licensee stated that, since the containment minimum water level is lower than the elevation of the containment floor inside the bioshield wall, flow inside the bioshield wall was not modeled by these two CFD cases. Rather than attempting to physically model the distribution of thin sheeting flows inside the bioshield and through the four doorways into the outer annulus, the licensee assumed that the total flow rate could be divided equally among three of the four doors the licensee expected to remain unblocked following a LOCA. Based upon this assumption, the licensee concluded that the two CFD cases modeling the replacement strainer design were representative of all analyzed breaks for Salem that occur inside the bioshield wall.

The staff considered the licensee's assumption of equal flow through the unblocked doorways in the bioshield wall to lack an adequate technical basis. At the minimum containment water level, shallow, sheeting flow would occur inside the bioshield wall, and the prediction of the distribution of flows would most likely not be independent of the break location. The discussion of scenarios 4 and 4a in Attachment 8.3 to the licensee's debris transport calculation [13] further provides evidence suggesting that characteristics of the break flow entering the pool have a role in the distribution of flow through the doorways through the bioshield wall. Therefore, the staff concluded that the licensee's assumption that the specific location of the break inside the

bioshield does not have a significant influence on the flow field in the outer annulus was not adequately justified.

Furthermore, the licensee did not attempt to model the kinetic energy of the flow exiting the bioshield in a representative fashion; rather, the velocity of each flow stream exiting the bioshield appeared to have been taken to be equal to flow rate (calculated as per the discussion above) divided by the cross-sectional area of the pool in the outer annulus at the doorway. Similar comments apply regarding the break and containment spray flows for certain scenarios for which these flows were explicitly modeled.

In light of the discussion above, the staff concluded that the degree of accuracy of the CFD-predicted flow field in the outer annulus is uncertain, particularly in the vicinity of the doors through the bioshield wall. However, because the licensee conservatively did not credit the settlement of debris in the outer annulus or within the bioshield wall, and due to other conservatisms discussed below in Section 3.5.6, the staff did not consider the licensee's modeling of flow exiting the bioshield wall to be an open item.

Blockage of the Bioshield Door Nearest the Strainers

The staff reviewed the licensee's assumption that the bioshield door nearest the containment sump strainer would pass no flow during a LOCA. Prior to the licensee's implementation of modifications to address GSI-191 issues, all four of the doors through the bioshield wall had similar locked-closed wire mesh gates [13]. To address water hold-up concerns associated with GSI-191, the licensee modified the gates for the three bioshield doors farthest away from the sump strainer to reduce the potential for debris blockage. The mesh gate for the bioshield door closest to the strainer was not modified because the licensee wanted to impose a tortuous transport pathway for large pieces of debris. Because the mesh gate had not been modified, the licensee's CFD analysis assumed that the accumulation of post-LOCA debris on the mesh gate would prevent the flow of water through the gate.

The staff considered the licensee's modifications to the three wire mesh doors to be appropriate, but questioned whether the analytical assumption that no flow passes through the unmodified mesh door nearest the sump strainer is conservative. Although, as the licensee stated, assuming blockage at this door increases the flow sweeping around the outer annulus far from the strainer, on the other hand, it also reduces the velocity and turbulence of the flow in the vicinity of a large number of strainer modules, where a significant amount of debris could be present at the foot of the debris interceptors.

Based upon photographs provided by the licensee during the audit, the staff concluded that the bioshield door nearest the strainer has a relatively small mesh that would most likely filter debris and thereby impose a substantial flow reduction through the doorway during LOCAs that would generate a large quantity of debris (which are expected to be most challenging to the functionality of the strainer). Therefore, the staff considered the licensee's assumption that no flow passes through this door to be reasonable for modeling flow in the containment pool under bounding large-break LOCA conditions. However, during the audit, the licensee did not provide calculations to demonstrate the structural adequacy of the unmodified mesh gate with respect to postulated post-LOCA structural loadings. Subsequent conversations with the licensee indicated that these had not been completed. If the unmodified mesh door were to fail as the result of post-LOCA structural loadings, the debris transport results could be affected in a non-conservative way. Therefore, the staff designated **Open Item 3.5-1** for the licensee to demonstrate that the unmodified mesh door nearest the strainer can withstand potential post-

LOCA structural loadings (e.g., jet impingement, subcompartment depressurization, and containment pool flows when obstructed with debris).

Modeling of Containment Sprays

The licensee stated that containment sprays would not be modeled for design-case CFD Scenarios 13 and 14 in order to maximize the flow from inside the bioshield to the outer annulus [13]. The licensee stated that, since the majority of the debris is generated inside the bioshield and transported to the outer annulus, modeling increased flow out of the bioshield doors (as opposed to modeling part of this flow as entering the containment pool along the containment perimeter) will not have a non-conservative impact on debris transport. Although the staff recognized this conservative aspect associated with not modeling the containment sprays, the staff also noted that neglecting containment spray drainage into the outer annulus could overlook its influence on the velocity and turbulence in the annulus, particularly in the vicinity of the strainer and debris interceptors. Because the licensee's CFD calculations do not specifically examine the effect of activating/deactivating the containment sprays on the containment flow field while holding other conditions constant, it is not clear to the staff that the licensee's neglect of containment sprays does not have a non-conservative effect. However, the staff considers the influence of containment spray drainage to be relatively small compared to other conservative assumptions in the transport calculation noted in Section 3.5.6, including the assumption that all small and large pieces of debris reach the interceptors. The staff based this conclusion on previous experience from reviewing other plants' CFD calculations and on engineering judgment. Therefore, the staff does not consider this issue to be an open item.

Boundary Condition at the Strainer Surface

For the design-case CFD Scenarios 13 and 14, the licensee stated during the audit that the flow boundary condition imposed at the strainer surface was based upon the clean-strainer flow distribution calculated by the strainer vendor [13]. For the proposed strainer design cases (Scenarios 6-12), the licensee stated that the flow was modeled as being distributed uniformly to each strainer module.

Subsequent to the audit, however, the licensee pointed out that the design-case CFD Scenarios 13 and 14 actually incorporated a flow boundary condition at the strainer surface for a debris-laden condition rather than a clean condition. For Scenario 13, with a total sump flow rate of 5110 gpm, the head loss across the strainer was modeled as 0.3 ft, which resulted in a non-uniform flow distribution wherein the strainer module nearest the suction line received a flow rate of 324 gpm and the module farthest from the suction line received 174 gpm. Similarly for Scenario 14, with a total sump flow rate of 9000 gpm, the strainer head loss was modeled as 0.6 ft, which resulted in a non-uniform flow distribution wherein the module nearest the suction line received 649 gpm and the module farthest from the suction line received 275 gpm. The licensee indicated that the strainer head loss conditions used in Scenarios 13 and 14 were based on a preliminary head loss calculation performed by the strainer vendor.

The staff considered the two different boundary conditions examined by the licensee as representing two potential strainer flow distributions in the spectrum of flow distributions that would occur as debris accumulates following a LOCA. The uniform flow distribution examined in Scenarios 6-12 corresponds to the potential condition wherein a significant amount of debris has built up on the strainer modules, with an unevenness that tends to balance the initial differences in the flow resistances of the individual modules. The condition examined in the design-case Scenarios 13 and 14 considers a lesser debris loading for which the strainer flow

distribution remains markedly non-uniform. The staff noted that the most limiting non-uniform flow condition would be that associated with a clean strainer, which corresponds to the condition immediately following the switchover to recirculation, when little or no debris is on the strainer. The staff expected that the flow conditions near the strainer for the low strainer head losses examined in the licensee's design case CFD simulations (0.3 ft and 0.6 ft) would likely resemble those for the more non-uniform clean strainer condition.

Because the Salem strainer is composed of a long chain of 23 modules, the staff expected the CFD boundary condition assumed at the strainer surfaces to have significant influence on the calculated flow field in the vicinity of the strainer and interceptors. An examination of the CFD simulations performed by the licensee appears to support this conclusion. Since only the flow distribution determined using the vendor's preliminary head loss calculation results was used for the licensee's design-case CFD simulations, there is uncertainty as to how accurate the design-case flow field is in the vicinity of the strainer for other conditions, such as the clean strainer condition and the potential case where additional debris bed head loss occurs and redistributes the strainer module flows more uniformly. Furthermore, based on an examination of the containment pool velocity contour plots generated with CFD, the staff concluded that the effect of channeling flow around the outer annulus would likely also have a significant effect on the actual distribution of flow through the strainer, by tending to concentrate flow and debris transport toward specific strainer modules. The staff further questioned the extent to which the flow to the strainer would be distributed evenly between the front surfaces of the strainer modules (which are relatively open to flow) and the rear surfaces of the modules that face the containment wall (which are somewhat more restricted to flow), as the licensee assumed. In summary, the staff concluded that there was insufficient evidence to support the specification of the strainer boundary conditions that essentially assume that debris accumulation and obstacles in the flow stream upstream of the strainer (some of which are located nearby strainer surfaces) have a negligible influence on the distribution of flow at the strainer surface.

However, in recognition of the conservative assumptions employed in the licensee's transport calculation that are described in Section 3.5.6 of this report, such as the lack of credit for debris settling in the bioshield or outer annulus away from the strainer and debris interceptors, the staff does not consider the localized inaccuracy in modeling the boundary condition at the strainer surface to be an open item.

Convergence of the Steady-State Solution

The licensee determined that a converged steady-state solution had been reached by the CFD code through the use of residual monitors and flow monitoring surfaces added to the CFD model [13]. The staff considered it appropriate that the licensee used both global residual monitors, as well as localized flow monitoring surfaces to ensure that adequate convergence of the numerical solution had been achieved in regions perceived to have the most significance to the problem.

Generally, there is a degree of oscillation in steady-state iterated solutions for CFD problems with complex flows. However, in one of the simulations performed by the licensee (Scenario 4a), the amplitude of the oscillation was particularly significant [13]. A change to the size of the cross-sectional area for the break flow entering the pool and a slight change to the angle of the horizontal velocity of the break resulted in the prediction of unstable, transient flow that tended to oscillate between different flow patterns. For example, through one bioshield doorway, an average flow of 395 gpm with an approximate 2-standard-deviation range of 85

to 700 gpm was predicted, and through another bioshield doorway an average flow of 3920 gpm with a range of 3420 to 4420 gpm was predicted.

The oscillations remaining in CFD calculations that are considered converged can be non-negligible, particularly for plants with complex containment pool geometries, significant flow restrictions, etc. The staff considers it essential for an appropriate degree of conservatism to be incorporated in debris transport calculations to account for these uncertainties. In recognition of the conservatisms discussed in Section 3.5.6, including the lack of credit for settling in the bioshield and in the annulus away from the strainer and interceptors, the staff concluded the degree of conservatism in the Salem transport calculation compensated for the observed oscillations (and therefore potential variations in transport fractions) in the convergence of the CFD solution.

3.5.3.2 Debris Transport Metrics

A summary of the metrics used by the licensee to analyze the transport of Nukon®, Kaowool®, and RMI (including Transco MRI®) debris during containment pool recirculation is provided in Tables 3.5-1 and 3.5-2 below [13]. Complete (100 percent) transport to the strainer was assumed for all other types of debris.

Table 3.5-1 Incipient Tumbling Velocity Metrics for Debris Transport During Recirculation

Debris Type	*Size*	*Incipient Tumbling Velocity (ft/s)*
Nukon®	*Small and Large Pieces*	*0.12*
Kaowool®	*Small and Large Pieces*	*0.12*
RMI	*All*	*0.20*

Table 3.5-2 Curb Lift Velocity Metrics for Debris Transport During Recirculation

Debris Type	*Size*	*Curb Lift Velocity (ft/s)*
Nukon®	*Small and Large Pieces*	*0.51*
Kaowool®	*Very Small Pieces (< ½ x ½ inch)*	*0.69*
	Small Pieces	*0.69*
	Large Pieces	*0.69*
RMI	*All*	*0.99*

The licensee's incipient tumbling transport metrics in Table 3.5-1 are acceptable because they are based on experimental transport data reported in NUREG/CR-6772 [28] and NUREG/CR-3616 [29]. The licensee's simplified application of the data in these NUREG reports for both small and large pieces of debris is further bounding and conservative, since the data was generally taken for more-transportable small debris pieces and would tend to substantially overestimate the transport of large debris pieces.

The licensee's curb lift velocity metrics in Table 3.5-2 are based upon two sources, NUREG/CR-6772 [28] and a report discussing testing conducted in a linear flume at the facilities of Fauske and Associates, Incorporated (FAI) [30].

The RMI curb lift velocity metric was taken from NUREG/CR-6772 [28] testing performed with a six-inch curb which showed that small pieces of RMI could not surmount the curb at 0.99 ft/s (higher velocities were not tested). The staff considered the application of this metric (0.99 ft/s) for all sizes of RMI to be conservative for the Salem debris interceptor configuration because the taller Salem interceptor with a lip would be even more difficult for small pieces of RMI to surmount than a six-inch curb.

The debris interceptor testing performed at FAI was used in determining the curb lift velocity metrics for Kaowool® [13]. Specifically, the metrics used for Kaowool® are derived from tests conducted at FAI using an 8-3/8-inch vertical curb with a 3-1/2-inch horizontal lip. The licensee stated that the FAI test conditions are conservative with respect to the actual Salem debris interceptor configuration, which is 9-1/8-inches tall and has a 4-inch lip. The staff generally agreed with this statement, but noted several issues with the test protocol that are discussed in more detail below. These issues notwithstanding, the staff considered the licensee's metric of 0.69 ft/s to be reasonable for Salem to use for Kaowool®, based on the testing performed with a shorter interceptor and in part on the argument made more fully below for Nukon® that the exact value of the curb lift metric is not significant, since the fluid flow velocity for the vast majority of the debris interceptor perimeter at Salem is well below the value of the metric.

For Nukon®, the licensee derived the curb lift velocity metric of 0.51 ft/s by multiplying the metric for small pieces of Nukon® for a 6-inch curb from NUREG/CR-6772 [28] (0.34 ft/s) by a factor of 1.5, to account for Salem's 9-1/8-inch debris interceptors with a four-inch lip (which are approximately 50 percent taller than the six-inch curb used for the NUREG/CR-6772 tests) [13]. In general, the validity of such an extrapolation is doubtful. However, based on a comparison of Kaowool® test data for an 8-3/8-inch interceptor from FAI [30] to data from NUREG/CR-6772 for a six-inch curb, the staff considered the multiplicative factor of 1.5 for Nukon® to be within reason as applied to Salem. Furthermore, the staff noted that the precise value of the curb lift metric was not critical for Salem's transport analysis, since the magnitude of the flow velocity for over 95 percent the strainer perimeter was calculated to be lower than 0.41 ft/s, and less than 0.34 ft/s for approximately 89 percent of the strainer perimeter.

Several issues the staff noted associated with the FAI debris interceptor testing protocol are (1) the non-prototypically low flume water level used for the transport testing, (2) the lack of consideration of a fully blocked case, and (3) the lack of explicit consideration of debris ramping effects.

First, the water level above the debris interceptors during the FAI flume testing was stated to be approximately four to seven inches [30]. Under plant conditions, this value would be a minimum of approximately 21 inches [13, 31]. While the lower flume water level is conservative in that it

results in a larger fluid acceleration and higher velocity as it flows over the interceptor, the FAI testing showed that when the interceptor became partially blocked, Nukon® and 1/4-inch pieces of Kaowool® tended to climb over the top of the interceptor. The licensee did not consider this effect to be representative of what would occur in the plant because the licensee concluded that at the plant submergence depth, the acceleration effect due to the blockage of the interceptor would be substantially reduced. The staff agreed that, at a submergence depth prototypical of the plant, this flow-acceleration effect would presumably be substantially reduced because the flow would be redistributed over a relatively large freeboard above the interceptor (21 inches) as compared to the shallower test flume (four to seven inches); however, convincing evidence that debris pieces would be completely prevented from climbing over the interceptor altogether in the plant configuration was not provided to support the licensee's assumption.

Second, the licensee's testing did not consider the case wherein a debris interceptor is essentially fully blocked. In the actual plant condition, in addition to the filtration of small and large pieces of debris that was simulated in the curb lift velocity transport testing, some quantity of fines and particulate would inevitably be filtered out by the interceptors, particularly along channels approaching the strainers having relatively high flows. The filtration of finer debris by the interceptors would result in the formation of a less-porous debris bed on the interceptors than one formed by small and large pieces alone. A less porous bed would tend to increase the velocity of the flow stream diverted over the top of the debris interceptors, increasing the potential for pieces of fibrous or RMI debris to climb over the interceptors. Based on discussions with the licensee during the audit, the staff further learned that head loss testing for Salem would be performed in a manner that would effectively credit the interceptors with capturing any fine fiber or particulate that happened to be filtered out by small and/or large pieces of fiber interdicted by the debris interceptors. However, the effect of this phenomenon on the curb lift velocity metrics used in the transport calculation was not assessed for its impact on the analytically calculated quantity of debris used in the head loss test.

Third, the licensee's testing did not fully consider the effect of the formation of debris ramps on the upstream side of the debris interceptors. Although some of the tests did involve the buildup of a significant quantity of debris at the interceptors, quantification of the effect of ramping on the curb lift velocity was not performed.

Despite these issues associated with the test protocol, the staff considered the curb lift velocity metrics used by the licensee to be reasonable for Salem based on compensating conservatisms in the Salem transport calculation [13], such as the lack of credit for any capture of fine debris at the debris interceptors, and the margin between the lift velocity metrics and predicted pool velocities around most of the strainer perimeter.

3.5.3.3 Fibrous Debris Erosion Testing

The licensee performed testing at FAI to estimate the extent of the erosion of large and small pieces of Nukon® and Kaowool® fibrous debris in a 30-day period in the Salem containment pool [13]. Based upon this testing, the licensee's transport calculation assumed that 40 percent of the Nukon® and 15 percent of the Kaowool® large and small pieces of debris would be eroded into fines over a 30-day period. Erosion was not modeled for debris from generic fiberglass and fiber from lead blankets because all of this debris was assumed to be broken down into fines after being exposed to a LOCA jet.

The FAI erosion testing was conducted in a linear flume, with the samples of insulation placed into the flow stream inside wire mesh baskets [13]. A turbulence suppressor and flow straightener were used to condition the flow upstream of the sample baskets. A nominal

(average) flume velocity of 0.72 ft/s was used for the testing. Debris samples were placed in the flume for a specific time period; removed, dried, and weighed; and then generally placed in the flume again later for one or more additional erosion test intervals.

The staff's review of the erosion testing focused upon several key aspects of erosion testing and evaluation, including (1) the prototypicality of the flow conditions (i.e., velocity and turbulence) established in the FAI test flume, (2) the size and characteristics of the prepared debris samples used for the erosion testing, and (3) the data analysis performed to justify the assumed 30-day erosion percentages.

Flow Conditions in the FAI Test Flume

Initially, the licensee stated that both the velocity and turbulence in the FAI test flume were conservative with respect to Salem plant conditions, as simulated by CFD. However, in response to questions from the staff, the licensee subsequently identified that the calculated turbulence in the test flume was less than the plant values calculated using CFD. Upon identifying this non-conservatism, the licensee performed a more thorough analysis of the velocity and turbulence fields in the containment pool and concluded that the velocity used for the testing (0.72 ft/s) was greater than the velocities found in 98% of the containment pool [32]. On the strength of this bounding velocity value, the licensee concluded that conservative flow conditions were present in the flume because the calculated total kinetic energy of the fluid in the flume (approximately 0.26 ft^2/s^2) exceeded the maximum value (0.14 ft^2/s^2) calculated by CFD to be present at a vertical plane 1 ft in front of the debris interceptors, where the licensee expected a majority of erosion to occur [13, 32].

Although the bounding flow velocity used by the licensee for erosion testing provided a degree of conservatism to the results, the staff did not consider the licensee's analysis of the containment pool flow conditions to be rigorous. In particular, the staff did not consider it reasonable for the licensee to treat the velocity and turbulence through a combined term (total kinetic energy) because there was no basis presented for concluding that their effect on erosion is equivalent per unit energy. In fact, it appears likely that, per unit energy, the chaotic, multi-directional variations in flow associated with turbulence would tend to have a stronger impact on erosion than a steady-state, fully developed velocity. However, based upon compensating conservatisms in the application of the erosion data that are discussed below, the staff did not consider the flow conditions in the FAI test flume to be an open item.

Size, Characteristics, and Placement of Erosion Debris Samples

The licensee stated that the debris used for the FAI erosion testing had been cut by scissors into regular rectangular pieces with sizes between 1/4 inch and four inches [30]. The licensee considered the debris preparation process to be conservative because the pieces had not been washed or rinsed prior to being placed into the test flume.

The staff did not consider the scissor-cut pieces of fibrous debris to be representative of shreds of fiber that would be generated by a water jet from a pipe rupture. Debris generated by a LOCA jet would generally be more loosely connected and irregularly shaped than the rectangular pieces neatly cut by scissors, and thus would tend to be more susceptible to erosion. However, based upon compensating conservatisms in the application of the erosion data that are discussed below, the staff did not consider the preparation of the debris samples to be an open item. The staff further considered it representative, but not conservative, that the samples used for erosion testing had not been washed or rinsed prior to being placed in the test

flume because, in the blowdown testing upon which debris size distributions are based, pieces of debris were not rinsed or washed prior to assigning them to various size distributions. However, the staff considered the size distribution of the debris samples to be representative, and even conservative with respect to large debris sizes, since smaller pieces have a higher surface-to-volume ratio than larger pieces, which tends to increase the erosion rate.

The erosion samples were placed in wire mesh baskets in the flume flow stream [30]. The staff viewed several photographs of tests in progress and noted that some debris samples appeared to have been oriented by the flow into groups (i.e., with some debris pieces partially shielding others) and may have behaved to a certain degree as one or several larger pieces of debris rather than multiple small pieces of debris. While the grouping together of individual debris pieces inside a sample basket may be prototypical of debris pieces grouping together in front of the debris interceptors in the plant, controlling the extent of this behavior during the test would have provided a clearer understanding of the conditions for which the testing is most representative.

Test Results and Data Analysis of Erosion Samples

The licensee calculated erosion percentages for small and large pieces of Nukon® and Kaowool® debris in the Salem containment pool over a 30-day period from the raw data measured in the erosion tests. Attachment 8.7 to the debris transport calculation contains this analysis [13].

The staff identified an anomaly associated with the erosion test results in that a significant number of the tests conducted over an extended period of time (e.g., greater than 96 hours) had a lower total eroded mass than debris pieces with a similar flow-exposure history that had undergone testing for significantly shorter periods of time (e.g., 24 hours). This result is anomalous because, although the erosion rate is expected to taper off with exposure time, the total eroded mass is expected to continuously increase (e.g., to an asymptotic limit). The licensee did not provide a definitive explanation for the observed anomaly in the results of the long-term tests. However, considering all of the erosion tests, the differences in sample masses in the various tests attributable to erosion were generally on the order of a hundredth of a gram (usually a reduction, in some cases an increase) [13]. As a result of these small mass differences, the staff considered it plausible that external factors could have played a role. For example, one factor could have been the gradual filtration of impurities in the water during the longer-term tests (airborne dust falling into the test flume or eroded fibers traversing the flume and being recaptured on the debris samples). Based upon the mass difference anomalies, the staff was not convinced that the test setup and protocol at FAI were adequately designed for conducting long-term erosion testing under conditions representative of Salem.

To address concerns with the anomalous behavior observed in the long-term tests (which appeared to affect the tests with Nukon® more strongly than the tests with Kaowool®), in performing its analysis of the test results, the licensee did not use test results with negligible or negative sample mass differences [13]. As a result of this decision, no test results were used for Nukon® that had been subjected to erosion intervals longer than 48 hours, and half of the test results for Kaowool® that had been subjected to erosion intervals longer than 48 hours were discarded. The staff considered the exclusion of the longer-term data to be a reasonable correction since this data was clearly anomalous, but noted that time-based effects such as the filtration of impurities in the flume water could also have had a less obvious effect on shorter-term tests as well.

However, the staff concluded that the above concern is addressed for the short-term tests in part by the conservative statistical analysis used by the licensee to determine the 30-day erosion percentages for Nukon® and Kaowool®, and in part by additional conservatism the licensee added to the calculated values, as noted below. The licensee's statistical analysis estimated the short-term and long-term erosion rates using the 90 percent confidence interval of the data. An independent confirmatory calculation performed by the staff showed that the data analysis performed by the licensee calculated conservatively high erosion rates based on the data obtained from the Nukon® and Kaowool® tests. The final 30-day erosion percentages calculated through the licensee's data analysis were 30 percent for Nukon® and 10 percent for Kaowool®; however, as noted above, for conservatism these calculated percentages were further increased to 40 percent for Nukon® and 15 percent for Kaowool® in the debris transport calculation [13].

Fibrous Erosion Testing Conclusion

The staff identified certain non-prototypical conditions associated with the FAI erosion testing (e.g., the turbulence in the flume, the preparation of the debris pieces, and the anomaly associated with the unexpectedly small or negative mass differences associated with some of the longer-term tests). On the other hand, the staff also noted that the licensee's data analysis incorporated conservatisms to account for some of these effects, and further noted that the transport calculation increased the calculated 30-day erosion percentages stated above to 40 percent for Nukon® and 15 percent for Kaowool® to add conservatism.

The licensee further stated that additional conservatisms are associated with the erosion testing and analysis and its integration into the rest of the sump performance analysis. These conservatisms include the assumptions that all of the debris is eroded by high-velocity flows at the debris interceptors (as opposed to settling out in low-flow areas of the containment pool where the erosion rates would be reduced), that debris retention or capture on structures is negligible, that the 30-day erosion quantity arrives at the sump strainer at the onset of recirculation rather than over a 30-day period, and that the design sump flow is maintained for 30 days after an accident [13].

Therefore, despite the technical concerns with the test procedure and methodology discussed above, the staff concluded that the licensee's assumed 30-day debris erosion percentages of 40 percent for Nukon® and 15 percent for Kaowool® are acceptable for Salem based on compensating conservatisms in the Salem debris transport calculation.

3.5.4 Calculation of Debris Transport Percentages

Using the methodology described above, the licensee computed debris transport percentages for types of debris for which than less 100 percent transport was assumed (i.e., Nukon®, Kaowool®, and Mirror® RMI). The main steps in the computation of the transport percentages for these debris types are outlined below.

For debris generated from generic fiberglass, Min-K®, Transco MRI®, qualified coatings, unqualified coatings, latent fiber and particulate, foreign material, and permanent lead shielding blankets, no specific discussion is provided because the licensee conservatively assumed 100 percent transport.

3.5.4.1 Nukon® Debris Transport Percentage

For Nukon® at Unit 1, the licensee assumed a size distribution of 25 percent fines and 75 percent small pieces [13]. All fines were assumed to transport to the strainer. All of the

small pieces in the containment pool were assumed to be trapped by the debris interceptors in front of the strainer, but were subjected to the assumption of 40 percent erosion. As a result, the licensee calculated a recirculation transport percentage of 55% for Nukon® debris at Unit 1, with all of the Nukon® transporting during recirculation being in the form of fines.

For jacketed and unjacketed Nukon® at Unit 2, the licensee assumed a size distribution of 15 percent fines, 45 percent small pieces, and 40 percent large pieces [13]. All fines were assumed to transport to the strainer. All of the small and large pieces in the containment pool were assumed to be trapped by the debris interceptors in front of the strainer, but were subjected to the assumption of 40 percent erosion. As a result, the licensee calculated a recirculation transport percentage of 49 percent for Nukon® debris at Unit 2, with all of the Nukon® transporting during recirculation being in the form of fines.

For both units, per the methodology described in Section 3.5.1 above, a small percentage of the generated Nukon® debris was also assumed to transport via blowdown and washdown, of which approximately 63 percent was classified as small pieces and 37 percent was classified as fines [13].

3.5.4.2 Kaowool® Debris Transport Percentage

The licensee assumed that Kaowool debris is destroyed into 15 percent fines, 45 percent small pieces, and 40 percent large pieces [13]. All fines were assumed to transport to the strainer. All of the small and large pieces in the containment pool were assumed to be trapped by the debris interceptors in front of the strainer, but were subjected to the assumption of 15 percent erosion. As a result, the licensee calculated a recirculation transport percentage of 28 percent for Kaowool debris, with all of the Kaowool transporting during recirculation being in the form of fines.

In addition, per the methodology described in Section 3.5.1 above, a small percentage of the generated Kaowool debris was also assumed to transport via blowdown and washdown, of which approximately 63 percent was classified as small pieces and 37 percent was classified as fines [13].

3.5.4.3 Mirror® RMI Debris Transport Percentage

The licensee assumed that Mirror® RMI debris is destroyed such that 5% of the pieces are smaller than 1/2 inch, and 95 percent are greater than 1/2 inch [13]. The licensee assumed that only the five percent of the pieces that are smaller than 1/2 inch are capable of climbing over the debris interceptors, and that the other 95 percent of the pieces are trapped by the debris interceptors in front of the strainer. Based upon the lift velocity metrics in Table 3.5-2 and accompanying discussion in Section 3.5.3.2 concerning the velocities around the debris interceptors, the staff considers the licensee's treatment of Mirror® RMI to be appropriate.

3.5.5 Overall Transport Results

In accordance with the methodology described above, the licensee's debris transport calculation [13] provides transport results, both in terms of the debris transport percentages and the total quantities of debris that arrive at the strainer. These quantities are summarized in Table 3.5-3.

Table 3.5-3 Summary of Debris Transport Results

Debris Type	Quantity Generated	Quantity Transported: Via Blowdown/ Washdown	Quantity Transported: Via Recirculation	Quantity Transported: Total	Total Debris Transport Percentage
Insulation – Unit 1					
Nukon®	**537 ft^3**	**33.2 ft^3**	**277.1 ft^3**	**310.3 ft^3**	**58%**
Kaowool®	**128 ft^3**	**3.9 ft^3**	**34.7 ft^3**	**38.6 ft^3**	**30%**
Generic Fiberglass	**45 ft^3**	**3.4 ft^3**	**41.6 ft^3**	**45.0 ft^3**	**100%**
Min-K®	**5.3 ft^3**	**0.27 ft^3**	**5.03 ft^3**	**5.3 ft^3**	**100%**
Mirror® RMI	**33926 ft^2**	**0 ft^2**	**1700 ft^2**	**1700 ft^2**	**5%**
Insulation – Unit 2					
Nukon®	**46 ft^3**	**1.4 ft^3**	**21.9 ft^3**	**23.3 ft^3**	**51%**
Kaowool®	**116 ft^3**	**3.5 ft^3**	**31.5 ft^3**	**35 ft^3**	**30%**
Generic Fiberglass	**47 ft^3**	**3.5 ft^3**	**43.5 ft^3**	**47 ft^3**	**100%**
Min-K®	**24.5 ft^3**	**1.8 ft^3**	**22.7 ft^3**	**24.5 ft^3**	**100%**
Mirror® RMI	**37685 ft^2**	**0 ft^2**	**1900 ft^2**	**1900 ft^2**	**5%**
Transco MRI®	**3255 ft^2**	**0 ft^2**	**3255 ft^2**	**3255 ft^2**	**100%**
Coatings					
Qualified Epoxy Coatings	**12.6 ft^3**	**0.8 ft^3**	**11.8 ft^3**	**12.6 ft^3**	**100%**
Unqualified Coatings	**0.5 ft^3**	**0 ft^3**	**0.5 ft^3**	**0.5 ft^3**	**100%**
Latent Debris					
Latent Fiber	**12.5 ft^3**	**3.1 ft^3**	**9.4 ft^3**	**12.5 ft^3**	**100%**
Latent Particulate	**170 lbm**	**42.5 lbm**	**127.5 lbm**	**170 lbm**	**100%**
Foreign Materials					
Labels (Unit 1)	**555 ft^2**	**0 ft^2**	**555 ft^2**	**555 ft^2**	**100%**
Placards (Unit 1)	**17.3 ft^2**	**0 ft^2**	**17.3 ft^2**	**17.3 ft^2**	**100%**
Labels (Unit 2)	**525 ft^2**	**0 ft^2**	**525 ft^2**	**525 ft^2**	**100%**
Permanent Lead Shielding Blankets	**1.0 ft^3**	**0 ft^3**	**1 ft^3**	**1 ft^3**	**100%**

3.5.6 Conservatism in the Debris Transport Calculation

The staff noted several significant sources of conservatism in the licensee's debris transport calculation [13], including the following:

- The licensee assumed that none of the fibrous debris was generated into intact pieces, which maximized the quantity of debris available for erosion in the post-LOCA containment pool.

- All of the fibrous debris calculated to erode over a 30-day period in the post-LOCA containment pool was assumed to arrive at the strainer at the initiation of sump recirculation.

- The licensee assumed no credit for capturing debris on gratings or other structures and equipment in upper containment. Although a significant fraction of debris captured in upper containment could eventually be washed back down to the containment pool, taking no credit for debris capture in upper containment is conservative with respect to the sump strainer design.

- The licensee did not credit debris holdup in the reactor cavity or the inactive normal containment building sump.

- All debris is assumed to transport to either the sump strainer or debris interceptor in front of the sump strainer, even though significant areas of the containment pool have velocities that are smaller than the applicable transport metrics.

- The licensee adopted the conservative baseline assumption that 100 percent of fines of fibrous and particulate debris would transport to the suction strainer. Although fines of fibrous and particulate material are expected to have very high transport fractions, the assumption of complete transport for these types of debris is conservative.

Although the effect of these conservatisms is difficult to quantify, the staff recognizes that they tend to provide confidence that the overall results of the transport calculation are conservative, despite the uncertainties and potential non-conservatisms associated with the licensee’s debris transport calculation that are discussed above.

3.6 Head Loss and Vortexing

3.6.1 Background

The Salem design approach for the upgraded strainer was to provide a single strainer design for each unit. The licensee’s strainer evaluation took the most conservative inputs from each unit and combined them into a single conservative model for testing purposes. For example, the Unit 1 containment contains significantly more fibrous debris than Unit 2. The licensee’s strainer head loss evaluation, therefore, addressed Unit 1 debris loads for high fiber head loss testing. Thin bed testing was performed as an integral part of the Unit 1 debris load testing. Where differences between units exist, this audit report section references and evaluates the unit-specific plant parameters stated by the licensee to be conservative with respect to their testing program.

The new Salem ECCS sump design uses a train of Control Components Incorporated (CCI) pocket strainer modules installed in the recirculation suction path for the Salem RHR system

pumps. At Salem, only the RHR Pumps take suction directly from the recirculation sump, while all other ECCS pumps take suction from the RHR pump discharge lines. The strainer design consists of a long bank of strainer modules installed on the lowest level of the containment. The strainers extend about 27 inches above the containment floor. The fronts of the strainer modules face the center of the containment and are relatively open to the flow that would take place following a LOCA. In addition, a debris interceptor has been installed in front of and on both ends of the strainer module train. The rear faces of the strainer modules are adjacent to the outer containment wall. Therefore, with the exception of the relatively small amount of debris that would be deposited in the annular space behind the strainer along the containment wall during the initial moments of the LOCA, or washed down behind the strainer by spray flow, all other debris reaching the rear pockets of the strainer modules must flow over the strainer.

The single strainer module train is connected to the suctions of the RHR pumps via a duct and suction box that was also designed by CCI. After fluid flows through the strainer surface, it flows into a central duct and flows towards the suction box. The suction box is located in the same place as the original strainer, over the RHR pump suction lines. The strainer modules, connecting ductwork, and suction box are completely sealed with no ability to communicate with the atmosphere above the minimum sump level.

Each strainer module consists of a large array of strainer pockets. Each pocket is 4.29 inches high, 2.76 inches wide and about 12 inches deep. The rear surface of each pocket is curved. There are a total of about 3475 pockets in the Salem strainers resulting in a total surface area of about 4656 ft^2 (Unit 2). Of this area, 500 ft^2 are subtracted in the analyses to account for miscellaneous debris (tags, tape, stickers, etc.) in containment, resulting in a final calculated available surface area of about 4156 ft^2 [34].

CCI tested for prototypical head loss from debris with and without chemical effects using their test flume with three separate rigs: a testing module consisting of 90 strainer pockets, a small test flume with a test module consisting of a simulation of six pockets, and a multifunctional (medium-scale) test loop consisting of 20 pockets.

An empirical correlation was used to calculate the clean strainer head loss due to the perforated pocket surfaces and the strainer internal structure.

A Computational Fluid Dynamics analysis was performed to determine the head losses associated with the Z-shaped duct that connects the strainer modules to the suction box [35]. Calculations were conducted to determine the total strainer hardware head loss for varying assumed debris loads (debris deposition locations vary with time). Results from individual module testing were extrapolated to determine head losses for the full train of modules with interconnecting piping under varying debris loads. The licensee called this total strainer hardware head loss under debris load “clean strainer head loss.” The head losses associated with the assumed debris loads are not included in this calculation, although the debris is recognized as causing changes to the “clean strainer head loss” values. This calculation is discussed further in Section 3.6.4.

Non-chemical effects head loss testing had been completed at the time of the audit. In addition, some testing of the strainer with postulated chemical effects debris had been performed [36]. Chemical and non-chemical effects testing showed that the head loss across the strainer assembly would be greater than the Net Positive Suction Head (NPSH) margin available for the RHR pumps. Therefore, the licensee removed some potential debris sources from containment and performed additional analysis to provide more realistic input values for future testing.

The licensee and its strainer vendor were planning to perform integrated chemical effects strainer head loss testing subsequent to the audit. Tentative plans for this next phase of testing were discussed with the licensee and strainer vendor, but are not addressed in this audit report.

It was anticipated by the licensee that the head loss across the strainer screens would be greater than the available water level above the strainer. Therefore, the licensee submitted a license amendment request (LAR) to allow credit for pre-accident containment atmosphere pressure to ensure that strainer performance analyses will show no vapor flashing in the strainer and, therefore, no vapor or gas bubbles in the strainer central train duct leading to the RHR suction box, and in the RHR pump suction pipes leading to the RHR pumps. This LAR was reviewed and approved by the staff, and the license amendment has been transmitted to the licensee.

As part of the prototypical head loss testing program, the licensee evaluated the susceptibility of the strainers to vortex formation. Because the strainer submergence is relatively low, the plate covering the top of each strainer module is solid (not perforated) to reduce the probability of vortex formation.

3.6.2 System Characterization-Design Input to Head Loss Evaluation

The licensee evaluated LOCA scenarios and identified events that may lead to recirculation through the emergency sump. The Salem ECCS consists of the RHR pumps, charging pumps, and SI pumps. These pumps require a supply of borated water for injection into the reactor following a break. The ECCS has passive accumulators that inject a large volume of water into the RCS and cool the reactor core following a large-break LOCA. The RWST provides an immediate source of borated water for the ECCS pumps to inject into the RCS.

The containment spray (CS) system sprays water into the containment to condense the steam release from the break. This spray cools and assists in depressurization of the containment. The RWST is also the initial source of water to the CS pumps.

After the RWST is emptied, the RHR pump suctions are switched to the ECCS recirculation sump (on the containment floor) to provide a long-term source of water for cooling the RCS and to support containment spray operation. This phase of the accident is termed recirculation because water supplies located externally to the containment building have been exhausted and water from the RCS break is recirculated from the containment sump back into the RCS.

The only ECCS pumps that require water from the recirculation sump are the RHR Pumps. The RHR pumps provide suction flow to the high head (charging) pumps and intermediate head SI pumps, and also inject water directly into the RCS when the RCS is below RHR pump discharge pressure. The RHR pumps can also directly provide spray flow, in lieu of the CS pumps, termed recirculation (recirc) spray. Recircirculation spray is provided until containment conditions allow it to be secured by procedure.

In order to swap from RWST injection to the ECCS recirculation mode, operators are required to realign valves in the RHR system. The swap over is manual in Unit 1 and semi-automatic in Unit 2. The operators are required to perform additional actions in Unit 1 because the design of the control logic is different between units. In Unit 1 the operators are required to stop and restart the RHR pumps while performing valve realignments. In Unit 2, the RHR pumps continue to operate while the valves automatically reposition.

3.6.2.1 Flow Rate

The licensee indicated in [37] that for the design LOCA scenario, the maximum flow rate through the ECCS strainer is 9000 gpm with both RHR pumps running. However, the limiting break for pump NPSH is associated with a large-break LOCA with the failure of an RHR pump. This case has only a single RHR pump running taking suction on the ECCS sump. The flow for each case was calculated by Westinghouse using a proprietary thermal hydraulics code called PEGISYS. This code considers the hydraulic phenomenon associated with the piping to determine the maximum flow through the pumps. The most limiting flow occurs during cold leg injection with the failure of an RHR pump. With only one pump running, the discharge head is decreased because one pump supplies both ECCS flowpaths through an RHR pump discharge crossover pipe, and therefore, flow through the single running pump increases. The increase in flow results in a greater NPSH required thus reducing NPSH margin. The flow for the single RHR pump cold leg injection case is 5110 gpm for Unit 1. The Unit 2 flow rate is slightly lower. At the Unit 1 flow rate of 5110 gpm, the design allowable head loss for the strainer is 1.8 ft. The Unit 2 allowable head loss is 3.15 ft. For both units, with both RHR pumps running, the allowable head loss is 6.91 ft.

NRC Staff Audit

The staff reviewed the calculations that describe the LOCA event characterizations and found that the inputs used in the calculations were reasonable. In general, the conclusions of the calculations for a large-break LOCA can be supported by licensing basis documents and other technical information collected on site. The hydraulic code used by Westinghouse to perform the calculations was not available for review, but the code had been reviewed in accordance with Westinghouse's QA program. The staff, therefore, finds the flow rates used in the strainer analysis to be acceptable.

3.6.2.2 Sump Water Temperature

The design temperature for the strainer hydraulic analysis is 60-260ºF [37]. The maximum temperature of the sump water during recirculation is calculated to be 258ºF. The maximum design temperature for the strainer structural design is 266ºF. At the time of the audit, a final strainer head loss calculation that scales test data to predicted accident conditions had not been completed.

NRC Staff Audit

The staff reviewed the information regarding the bounding sump water temperature for the strainer head loss calculation and the NPSH calculation. The staff agrees that the use of 260ºF as the limiting temperature for the NPSH calculation will yield a conservatively low NPSH margin value, as discussed in Section 3.7 of this audit report. This is because suction head losses for all sump water temperatures were conservatively computed by the licensee using a temperature of 60ºF that maximizes fluid density and viscosity and, therefore, also maximizes the head loss, while for sump water temperatures above 193.7ºF the vapor pressure of the sump water was taken as the containment pressure. It is important to note that temperature scaling based on viscosity may not be valid if the debris bed formed during testing contained bore holes, channels, or similar imperfections that would allow turbulent flow through the bed.

Because the strainer head loss calculation, including scaling for sump pool temperature, had not been completed at the time of the audit, the staff cannot make a judgment as to its acceptability.

Therefore, the sump water temperature used for strainer design is included in **Open Item 3.6-1** in Section 3.6.6.

3.6.2.3 Containment Sump Pool Water Level

The licensee calculated the volume of water transferred to the containment from the RWST combined with the amount of water available to the sump from the accumulators prior to transfer to recirculation mode [38]. The minimum water level for a large-break LOCA is determined to be at elevation 80ft-10in. (30 inches above the 78ft-4in. floor elevation).

The minimum water level for a small-break LOCA may not include water inventory from the accumulators, depending on the size of the pipe break. The licensee stated that for small break LOCAs, where the RCS may not depressurize sufficiently to allow the accumulators to dump, the plant is taken to hot shutdown without the need for sump recirculation. This conclusion is supported by [86]. Further, the accumulators are not required to discharge their volume to raise the containment pool level to the required minimum indicated level of 80ft-11in. (including instrument uncertainty) because there is sufficient water inventory in the RWST between the low-level alarm set point (point at which switchover is normally initiated) and the low-low-level alarm set point to raise the water level above 80ft-11in [38]. The transfer to recirculation is not initiated until the 80ft-11in. level indication is received in the control room.

The licensee evaluation conservatively assumes Technical Specification minimum volumes and maximum water temperatures prior to injection to calculate containment water level. This minimizes the water mass added to the sump. The RBES floor elevation is 78ft-4in. The minimum elevation of the water for a large-break LOCA is 80'-10", resulting in a calculated water height of 30 inches above the sump floor. The strainers are installed on the floor of the containment and extend 2ft-3in. above the floor [37]. Based on the above, the minimum strainer submergence is three inches. Based on licensee testing to date [35], this submergence is less than the maximum corrected head loss across the screen. Therefore, without the credit for partial air pressure, water vapor flashing is expected to occur inside the strainer during the long-term recirculation phase of a large-break LOCA. A license amendment request or LAR to allow the partial air pressure has been reviewed and approved by the NRC staff. This should allow the licensee to demonstrate that flashing will not occur when the strainer head loss calculation is finalized.

The licensee's vortex evaluation [39] showed that the formation of a vortex is extremely unlikely based on an empirical correlation developed for the Salem strainer design. The design coverage for the Salem strainer is greater than the depth required by the empirical vortex evaluation. That is, the predicted strainer submergence at the minimum containment water level is adequate to prevent vortex formation. The water level above the strainer during testing was significantly higher than the minimum predicted three inches. However, plans for future testing include observations for vortex formation at and below the minimum submergence level. Because the calculated submergence is relatively low, the strainer is supplied with a solid top plate to minimize the potential for vortex formation. The void fraction downstream of the debris bed is to be addressed by the licensee as part of the final calculation following the scheduled testing. This area could not be reviewed during the audit because the information was not yet available. **This is included in Open Item 3.6-1** in Section 3.6.6.

The staff reviewed the analysis determining the minimum containment flood level [38]. Section 5.2 of this report discusses upstream effects affecting minimum containment flood level. As discussed above, the staff reviewed the analysis determining the estimated sump water temperature, minimum ECCS sump pool water level and the maximum flow rate through the

sump for the strainer head loss calculation. Because these design inputs were developed either based on the previous licensing basis calculations or bounding values selected for the head loss evaluation, the staff considers them acceptable. The effect of these parameters on strainer vortexing is addressed in Section 3.6.5 of this report.

3.6.3 Prototypical Head Loss Testing

In order to demonstrate that the new strainer head loss for the most limiting LOCA case is less than the Salem design input of 1.8 ft, the licensee performed prototypical head loss testing. As described above, testing was completed using the large-scale, small-scale, and multifunctional test loop facilities at CCI. Large-scale [40] and small-scale [41] testing were completed to provide baseline data for the chemical testing [36] that was accomplished in the multifunctional test loop. Testing in the large- and small-scale loops is not discussed in detail in this report. Only the testing in the multifunctional test loop is described because it was the testing used by the licensee to perform the plant strainer evaluation that is being audited.

The multifunctional test loop at CCI consists of a closed recirculation loop as shown in Figure 3.6-1. All testing discussed in this audit report was conducted in the loop as depicted in Figure 3.6-1. The water is recirculated through the loop by a centrifugal pump. The flow rate was adjustable by controlling of the rpm of the pump motor. Additionally, the flow rate could be adjusted by means of a valve in the upstream line. The flow rate through the loop was continuously measured using a magnetic inductive flow meter. The temperature of the water was measured using a Type K thermocouple. The test tank consists of a Plexiglas channel about 1.3 ft wide and 4.6 ft high. A CCI strainer segment 10 pockets high by four pockets wide was used for testing. The test array pockets were identical to the plant strainer pockets, but were installed rotated 90 degrees from the plant orientation. Because the velocity of the fluid is so low, and the pockets are relatively symmetrical, the staff considers this difference to be inconsequential to the test results.

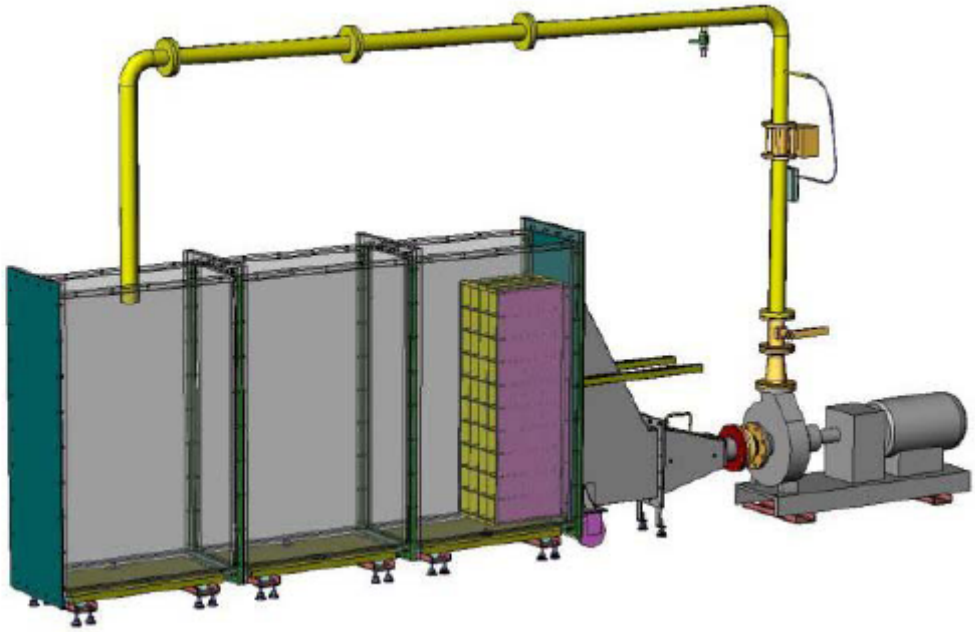

Figure 3.6-1 CCI Test Loop

For Salem testing, due to a relatively low sump pool water level and the fact that the strainer modules in the plant were shorter than the test modules, the top 20 test strainer pockets were blocked off to make debris transport to the strainer more prototypical. The pockets that were blocked were sealed to prevent any significant bypass of the flow past the intended pockets. Although the pockets were blocked preventing significant flow through them, air could still be drawn into the pockets and therefore they had to be covered with water. The design minimum submergence level in the plant is three inches from the top of the strainer. Therefore, the test set up was not adequate to make meaningful vortexing observations. In future tests, a more realistic test set up is planned. See Figure 3.6-2 for a conceptual drawing of the proposed test set up in the multifunctional test loop (debris interceptor not shown). The setup shown in Figure 3.6-2 shows both the front and rear facing strainer modules. The rear modules model the modules that face the Salem containment wall. (See Section 3.6.1 for a description of the plant strainer.) As can be seen in Figure 3.6-2, testing with the planned arrangement will also allow the water level to be controlled at the prototypical level for the Salem plant strainer.

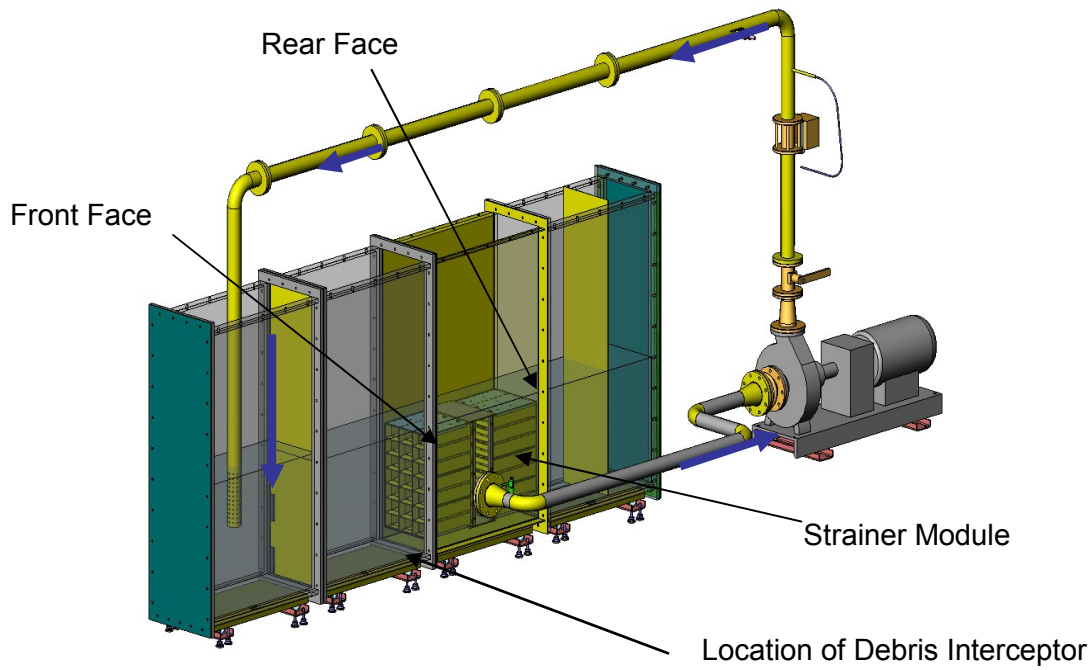

Figure 3.6-2 CCI Test Loop for Future Tests

The flow rate in the loop was based on a scaling factor that considered the blockage of the pockets. At the beginning of the test the water level was set between three and six inches above the strainer. While this submergence level is not consistent with Salem's minimum strainer submergence, the strainer height was similar, and with the upper pockets blocked the debris transport into the lower open pockets should have been relatively prototypical with respect to strainer height.

The head loss across the strainer was measured by means of calibrated differential pressure transducers. Continuous head loss measurements were taken throughout each test, along with

the total flow rate and the water temperature measurements. The debris was introduced directly at the surface of the strainer.

Several head loss tests were run to measure the response of the strainer to varying debris loads and flow rates. The tests included attempts to create a thin bed and cases with additional fibrous debris, particulate debris, and chemical debris. The Salem debris generation calculations do not predict enough debris creation to result in the formation of a circumscribed debris bed enveloping the entire strainer. Up to 100 percent of the non-chemical debris loads were used during testing and up to 140 percent of the anticipated chemical debris was added during the testing.

NRC Staff Audit

The staff reviewed the test plan, the test report, and the interpretation of the test results. The tests were run at two flow rates. Salem's maximum design strainer flow is 9000 gpm with two pumps running. However, a case with a single pump running at 5110 gpm was believed, by the licensee, to be more limiting due to the additional NPSH required at the higher flow rate. Strainer head loss tests were run for both of these flow cases.

One of the chemical effects tests [36, test 5] was run for 12 days. The test showed that the head loss increased during the test. Based on the results of the 12 day test the licensee extrapolated the results out to 30 days to determine the final testing head loss.

A final head loss calculation was not completed at the time of the audit, so the staff could not make formal conclusions regarding the acceptability of the overall strainer head loss. However, based on a preliminary calculation [35], it appears that the head loss may exceed the preliminary design value of 1.8 ft for NPSH margin at some time during the postulated event.

Planned testing by the licensee is to be designed to have more prototypical debris bed formation and potentially create reduced head loss values. Analysis of testing could also show that the higher strainer flow rate associated with two-pump operation is more limiting than the flow rate for single-pump operation. Once the final combined chemical effects/debris head loss testing is completed, the licensee will have to perform an integrated strainer head loss evaluation that includes a system NPSH analysis for both one and two pumps running. See **Open Item 3.6-1** in Section 3.6.6.

3.6.3.1 Debris Types, Quantities, and Characteristics

The predicted quantities of debris used to determine the amount of debris for head loss testing for Salem are shown in Table 3.6-1 [13]. The miscellaneous debris (tapes, tags, etc.) was not included in the test debris load of Table 3.6-1 because the calculation conservatively reduced the available strainer area by 500 ft^2 to account for miscellaneous debris.

All of the breaks analyzed resulted in the same amount of debris of the various types except for break S3 [13]. Break S3 calculations resulted in lower quantities of debris. The debris quantities specified for testing were based on the breaks with larger debris quantities. The debris that is listed as "Direct" in Table 3.6-1 is the debris that is postulated to fall on top of or behind the strainer (ref. Figure 3.6-2) due to the ejection of debris by the break and subsequent washdown by containment spray. Most debris is postulated to arrive in front of the strainer and have to pass through or over the debris interceptor which has been installed in front of and on both ends of the strainer. This debris is listed in the "Sump Pool" column of Table 3.6-1.

Table 3.6-1 Bounding Quantities of Debris for Head Loss Testing

Debris Type	*Unit 1 Debris*		*Unit 2 Debris*	
	Sump Pool	*Direct*	*Sump Pool*	*Direct*
Metallic (ft^2)				
Transco MRI®	***0***	***0***	***3255***	***0***
Metal Reflective Insulation	***1700***	***0***	***1900***	***0***
Fibrous (ft^3)				
Nukon®	***277.1***	***33.2***	***21.9***	***1.4***
Kaowool® and Cera-Blanket®	***34.7***	***3.9***	***31.5***	***3.5***
Generic Fiberglass	***41.6***	***3.4***	***43.5***	***3.5***
Latent Fibers	***9.4***	***3.1***	***9.4***	***3.1***
Lead Blankets Jacketing	***1.0***	***0***	***1.0***	***0***
Particulate (ft^3)				
Min-K®	***5.03***	***0.27***	***22.7***	***1.8***
Qualified Coatings	***11.8***	***0.8***	***11.8***	***0.8***
Unqualified Coatings	***0.5***	***0***	***0.5***	***0***
Latent Particulate	***0.75***	***0.25***	***0.75***	***0.25***

Section 3.5 of this report discusses how the amounts of debris predicted to arrive at the strainer were determined. The debris loads actually used in the tests were scaled down from the plant debris loads based on the ratio of the actual versus tested strainer surface areas (i.e., 4354/26.8=162.5 (Unit 1) and 4156/26.8=155.1 (Unit 2) [34]). The staff compared the characteristics of the surrogate test materials with the corresponding plant material to ensure either prototypicality or conservatism. The surrogate materials selected for head loss testing are compared to the postulated plant debris in Table 3.6-2, along with the licensee justifications for the surrogate selections [34].

Table 3.6-2 Selection of Surrogate Test Debris

Postulated Plant Debris	*Surrogate Material*	*Justification*
Nukon®	***Nukon®*** ***(Density of 2.4 lbm/ft^3)***	***Same basic material for both plant and surrogate debris***
Kaowool® and Cera-Blanket®	***Kaowool®*** ***(Density of 8 lbm/ft^3)***	***Similar material for Kaowool® and conservative representation for Cera-Blanket®***
Generic Fiberglass	***Nukon®***	***Conservative quantities of Nukon® used to compensate for unknown properties of generic fiberglass by assuming 6 lbm/ft^3 for the generic fiberglass***
Lead Blanket Jacketing	***Alpha Maritex® cloth*** ***(Density of 86.5 lbm/ft^3)***	***Same basic material for both plant and surrogate debris***
Min-K®	***Flex BL21811-16 Min-K*** ***(Density of 16 lbm/ft^3)***	***Test surrogate similar to plant material***
Qualified and Unqualified Coatings	***Stone Flour*** ***(Density of 164.7 lbm/ft^3)***	***Stone particle specific surface area corresponds to a diameter of 7.7 µm compared to GR recommendation of 10 µm***
Latent Fibers	***Nukon®***	***GR recommendation***
Latent Particulates	***Stone Flour*** ***(Density of 164.7 lbm/ft^3)***	***Stone particle specific surface area corresponds to a diameter of 7.7 µm, which is finer than SE recommendation***

RMI Debris Head Loss Assessment

The licensee conducted head loss tests with RMI. These tests showed that the addition of RMI to the other debris resulted in no increase in head loss [36]. This is consistent with staff observation of other licensees' tests conducted with RMI. For the debris loads expected at Salem, it is considered acceptable by the NRC staff to perform testing without introducing RMI into the test tank along with the other debris.

Tapes and Labels Head Loss Assessment

Based on walkdowns, the licensee predicted that 573 ft^2 of miscellaneous debris including labels, tags, tape, etc. is available within containment to potentially obstruct portions of the

replacement strainers. The staff SE allows licensees to take 75 percent of this area as the area that would actually become blocked by the debris (due to overlap). Salem conservatively used 500 ft^2 as the area predicted to be blocked by miscellaneous debris. Instead of including the miscellaneous debris in the test, the actual strainer area was reduced by 500 ft^2 prior to performing the scaling analysis to determine strainer approach velocities and test strainer debris scaling. This is an acceptable method to account for miscellaneous debris because it is a worst-case assumption for the reduction in available strainer area caused by this debris. Further, staff has accepted this test method for most strainer vendors.

Fiber/Particulate Head Loss Assessment

The bounding amounts of debris predicted to arrive at the strainer are shown in Table 3.6-1. These values were reduced by the scaling factors for Unit 1 and Unit 2 [34]. The resulting amounts of debris were used for testing.

The first test run was an attempt to create a thin bed [36]. The thin bed occurs when a relatively small amount of fiber (<1/4 inch, usually approximated at about 1/8 inch) is distributed uniformly over the strainer. This fiber then acts as a filter to remove particulate. As particulate is filtered from the test fluid the debris bed porosity decreases and head loss increases for a period of time. If too much fiber is added to the debris bed, the particulate debris is dispersed through a larger volume and the porosity of the bed may not significantly increase. Also, if the fiber bed is not uniformly formed, a thin bed may not occur because thicker areas of the bed will maintain lower porosity or thinner areas may be too thin to result in a large head loss.

During the thin bed portion of the test, the licensee appropriately added the fibrous debris slowly and waited for head loss to stabilize before adding the next batch of fiber. However, based on photographs of the testing that showed non-uniform debris deposition on the strainer, and based on the head loss data from this test, the staff believes that a thin bed did not form. The results of this testing were used to determine which debris load was most limiting prior to the addition of chemicals to the test loop. Because the licensee did not believe that a thin bed had formed, the licensee's chemical testing concentrated on full debris load testing (which had resulted in the highest head loss during the preliminary testing). Therefore, chemical testing with a thin bed was not conducted.

The staff believes that a thin bed could form if prototypically fine fibrous debris was used for testing. However, for the Salem testing the fiber was not all rendered into truly fine pieces (readily suspended fibers). The Salem transport analysis predicts that only very fine fiber will arrive at the strainer, with larger pieces of fibrous debris not transporting onto the strainer surfaces due to the relatively slow pool velocities and the debris interceptor. During testing, due to a combination of inadequate fiber preparation and introduction of the debris too close to the strainer face, the debris bed was built with larger clumps of fiber that were not conducive to the formation of a thin bed. The staff believes that it is possible that the thin bed may be the limiting case for strainer head loss, especially when chemical effects are added to the debris load. This is included in **Open Item 3.6-2**.

Min-K® is known to be problematic particulate insulation with potentially significant head loss effects. Salem Unit 2 contains significantly more Min-K® than Unit 1 (24.5 ft^3 vs. 5.3 ft^3). However, the testing was based on the Unit 1 amount of Min-K®. Preliminary staff calculations show that the exclusion of the larger amount of Min-K® may make a significant difference in strainer head loss. This is included in **Open Item 3.6-1** in Section 3.6.6.

The licensee stated that the issues with fibrous debris preparation and the use of the smaller amount of Min-K® are to be addressed in the upcoming testing to be performed at their strainer vendor's testing facility.

During the test series, the licensee performed additional evaluations of the amounts of debris that were expected to arrive at the strainer. After the first test, the licensee reduced the amounts of Nukon® and Kaowool® significantly. This change was based on erosion testing performed on fibrous debris at Fauske and Associates (FAI) [30]. This erosion data was reviewed and accepted by the staff. Tests subsequent to Test 1 were performed with a lesser amount of fibrous debris. The staff reviewed the erosion testing report and the use of the erosion data to reduce the strainer debris loads. Based on its review of this information, the staff finds the licensee's application of the erosion study in Salem head loss and vortexing testing to be acceptable.

3.6.3.2 Scaling Methodology, Testing Procedures and Test Results Interpretation

Scaling Methodology

A description of the test setup used for strainer head loss testing is in Section 3.6.3.1 of this report. There are a total of about 3290 strainer pockets in the Salem Unit 2 strainer (3430 pockets for Unit 1), plus lower covers that provide additional strainer surface area. The lower covers are perforated flat surfaces below the pockets. The total strainer surface area for Unit 2 is 4656 ft^2. Unit 1 has a total area of 4854 ft^2. Of this area, 500 ft^2 were subtracted to account for latent tags, tape, stickers, etc. in the containment. This adjustment results in a final, active surface area, of about 4156 ft^2 for Unit 2 and 4354 ft^2 for Unit 1 [34].

The test strainer consisted of an array of 20 pockets with a total area of 26.8 ft^2. The licensee scaled the total debris loading and the test flow rate based on the ratio between the total testing module surface area and the actual screen surface area. The overall scaling factor for the testing was 155.1 for Unit 2 and 162.5 for Unit 1 based on the areas described above. The testing was based on Unit 1 because the fibrous debris loads for Unit 1 were significantly greater.

The debris loads and velocities for the testing were scaled based on strainer area less the sacrificial area for the miscellaneous debris. This scaling method is typical for strainer vendors and is appropriate for the Salem case because, due to the layout of the strainers and the potential amount of debris, the spaces between the strainer modules themselves and between the strainer modules and adjacent objects will not become filled with debris. If these spaces or gaps become filled, the debris bed is described as a circumscribed bed. If a circumscribed bed could form, a more complex scaling technique could be required. Given that a circumscribed bed is not expected to occur at Salem, the staff considers the licensee's scaling methodology acceptable.

Testing Procedures

Prototypical head loss testing was performed for the licensee by the strainer vendor following their testing procedures. The only testing evaluated in this report is the testing that was performed in the multifunctional test loop (Figure 3.6-1) because that is the testing that the licensee used to evaluate the strainer head loss performance. Prior to conducting testing in the multifunctional test loop, both large- and small-scale head loss tests, using strainer modules with different numbers and arrangements of pockets, were conducted in different test facilities to

assess the potential head loss across the Salem replacement strainers. Although the large- and small-scale testing was not used for the head loss analysis evaluated in this audit, the staff reviewed the test results for these tests [40, 41] to gain additional insight into the performance of the strainers and the testing methods.

The test procedures for the multifunctional test loop tests, which are the subject of this audit, were presented in the test specification [34]. A test report [36] presented the head loss results. The tests were conducted with test modules consisting of 20 strainer pockets having screen areas of 26.8 ft^2. The test facility is described in Section 3.6.3 of this report and also shown in Figure 3.6-1. The staff reviewed the CCI test procedures for introduction of debris, the test termination criteria, and the test matrix.

The multifunctional test loop testing consisted of several individual tests described below. Each test was designed to investigate one or more aspects of how debris loading affects the strainer. During multifunctional test loop testing, the approach was to introduce the debris in close proximity to the test strainer to reduce debris settling within the tank. While this approach reduces near field settling, it does not eliminate it. Post-test photos clearly show varying amounts of both fibrous and particulate debris on the tank floor. In addition, the CCI approach of introducing the debris in close proximity to the strainer could introduce non-prototypical debris distribution for the fine suspended debris. This is because larger pieces of debris that otherwise might not have reached the strainer could have entered the pockets because of being introduced above and close to the pockets. This larger debris could disturb the formation of a thin bed. Additionally, the rate of introduction of fibrous debris in the proximity of the strainer module can influence the compaction of the accumulated fiber bed, and the water flow carrying the debris into the tank can affect the debris accumulation if that flow were directly toward the strainer screens.

Since the procedure for the thin-bed test did not end with a thin-bed debris load, but continued to add debris to the test loop, there are no post-test photos of a thin-bed case to determine how the fibrous debris was entering and depositing in the pockets.

The method used to introduce debris in the proximity of the test module was conservative with respect to the transport of large debris. The Salem tests during which RMI debris was introduced show RMI debris accumulation on the strainer even in the second and third rows of pockets, but only because the debris was artificially introduced close enough for the RMI to be pulled into a pocket before natural settling would drop the debris to the tank floor. In the Salem sump, the flow velocities would not be sufficient for RMI debris to accumulate within the upper pockets. In addition, the debris interceptor would likely stop all RMI debris before it could reach the strainer.
The licensee process for generating fibrous debris was to separate the insulation from any jacketing, bake it at 300°C, run the fibers through a leaf shredder, and finally decompose the insulation by impacting it with a high pressure water jet. During the audit the staff discussed the preparation of fibrous debris at length with Salem personnel and their vendors. Based on photographs taken following testing, the staff concluded that the debris that had created the debris beds during testing contained significant amounts of fiber that were larger than what is predicted by the transport analysis.

In general, with respect to debris preparation and introduction, the staff has concluded that the most limiting head losses are likely to occur from the uniform deposition of fine fibrous debris in conjunction with particulate and chemical debris in a thin bed. In the case of Salem, only fine fibrous debris is predicted to transport to the strainer. In addition, the debris would likely arrive

at the strainer relatively slowly with the potential to build a uniform bed passing through the thin bed regime. Because the flow at the strainers nearest the RHR pumps' suction inlets is greater before debris is accumulated on the strainer, the fibrous debris would likely collect there first. The accumulation would move progressively down the strainer away from the RHR pump suction as debris accumulated on the nearer strainer modules. In any case, the uniform debris bed would likely result in the highest head loss. Therefore, test conditions should attempt to build a uniform bed unless it can be demonstrated that a uniform bed will not form in the plant.

Chemical debris was included in the testing as described below with up to 140 percent of the predicted chemical load added. The adequacy of the chemical effects portion of the testing is addressed in the Chemical Effects section of this audit report.

The termination criteria for the Salem testing were specified in the testing documents as head loss stabilization criteria. The term "stabilization criteria" was used because the head loss limits were applied to interim test steps (where additional debris was added) as well as the final test termination. For head losses less than one foot, the interim step and termination head loss criteria were set at three percent increase or less in 10 minutes for the thin bed test and one percent in 30 minutes for the full load tests. For a head loss greater than or equal to one foot, the stabilization criteria were set at one percent in 30 minutes for both thin bed and full load tests.

The procedure did not specify a minimum number of tank volume turnovers following the final addition of debris. However, the procedure did calculate the time required for five and 15 turnovers for each unit at the design flow rates. The staff has stated in its head loss review guidance [42] that 15 turnovers should be allowed to ensure relatively complete filtering of fine particulate debris. Based on the flow rate, system volume, and test times it appears that the 15 turnover criterion was likely met for all tests. The head loss plots show that the head losses were relatively stable prior to stopping the test in most cases. The test that was used as the current test-of-record at the time of the audit was run for 12 days resulting in hundreds of turnovers. This is clearly acceptable based on the 15 turnover standard.

In the test report [36], the licensee provided plots of temperature, flow and head loss versus time. These plots show that, over the short term, head loss increases may appear to be reasonably small in magnitude. However, the licensee performed a 12-day test that showed a steady increase in head loss during the entire test. Taken over a few hours, the head loss increase may have appeared to be inconsequential. However, taken over the entire RHR pump operating time requirement the increase was substantial. The licensee appropriately extrapolated the test data to the 30-day pump mission time in the preliminary calculation that was provided for staff review [35]. A similar extrapolation should be considered when the final Salem integrated testing is performed.

The staff concluded that improvements should be made to the fiber preparation and debris introduction portions of the testing to ensure prototypical bed formation. In addition, the amount of Min-K used for thin bed testing was derived from the unit with a less conservative amount of that insulation. These issues are included in **Open Item 3.6-1** in Section 3.6.6.

<u>Test Results Interpretation</u>

The Salem strainer test program consisted of several test runs. The tests were conducted using the various debris loads and run at the one- and two-pump design flow conditions.

The staff reviewed the methods for interpretation of the data collected during this testing. Tests 1 through 4 were run with no chemical debris. Tests 5 and 6 included chemical debris. Tests 4 and 5 were the only tests that included RMI debris. The test that was intended for strainer qualification was Test 5 [36].

Test 1 added fibrous debris slowly in an attempt to find a thin bed. This test was run at a flow rate scaled to 9000 gpm, the highest design flow rate for the strainer. Because the head loss increased significantly with each debris addition, even past the thin-bed regime, the licensee determined that a thin-bed would not occur. That is, head loss continued to increase as debris was added indicating that a maximum debris load was limiting. Although the debris introduction sequencing appears to have been appropriate, based on the head loss leveling off prior to the next cycle of debris addition, the staff finds the licensee's conclusion of "no thin-bed formed" to be potentially non-conservative. This conclusion is based on the debris being too coarse, the debris being introduced too close to the strainer, and the quantity of Min-K® being insufficient. These issues are also discussed in Section 3.6.3.1 under the Heading "Fiber/Particulate Head Loss Assessment." At the end of Test 1, there was a significant pile of debris in front of the strainer sloping down to the floor. This was not the result of near-field settling, but debris transported to and piled against the strainer. The head loss for Test 1 was approximately 5.8 ft.

Test 2 and the remainder of the tests were run with the reduced amounts of fibrous debris justified by the erosion testing. The Nukon® used was slightly more than one-half, and the Kaowool® was about one-fourth the amount used in Test 1. The flow rate for Test 2 was scaled to 9000 gpm. The head loss reported at the end of this test was 2.7 ft. The test was run for over five hours after the last debris was added to the test tank. This allowed for more than 30 tank turnovers, and the head loss appeared to be increasing slowly when the test was terminated. At the end of the test, it was noted that there was significant debris on the floor of the test tank due to near-field settling (estimated by CCI at 80 percent). The debris likely settled to the tank bottom due to agglomeration because all of the debris was added at once in this test, whereas in Test 1 the debris was added slowly and significant settling did not occur. The debris was agitated with a shovel and head loss increased rapidly to about 5.0 ft. Photographs show that after the debris was agitated most of the settled out debris migrated to the strainer or was re-entrained in the stream.

Test 2a was a repeat of Test 2, except that a plate was installed in the test flume with an 8 mm gap between the plate and the side wall of the flume. Although not shown in Figure 3.6-1, this plate can be seen in Figure 3.6-2 upstream of the strainer module. The plate is installed and a small gap is maintained between the vertical side of the tank and the edge of the plate. All flow is forced through this gap resulting in increased turbulence in the tank and increased flow parallel to the face of the strainer, upstream of the strainer module. The gap introduced enough turbulence into the tank that debris settlement was minimal. This test was run for about two hours after the last debris addition, allowing about 15 tank turnovers. However, the peak head loss of 8.3 ft occurred about one hour after the last debris batch was added. Immediately following the last addition, the head loss decreased quickly to about 7.2 ft and then drifted down slowly to a head loss of 6.9 ft at test termination. It is likely that the rapid decrease in head loss was due to channeling or bore-hole formation initiated by the high differential pressure. The licensee noted that with higher turbulence and, therefore, higher transport, the peak head loss value increased before the theorized channeling/bore-hole phenomena occurred.

Test 2b was also a repeat of Test 2 with the exception that the quantity of particulate debris was reduced, based on further refinements by the licensee. An approximate 25 percent reduction in maximum head loss relative to Test 2a was observed.

Based on the results of Tests 1 through 2b, CCI and the licensee concluded that debris settling of up to 80 percent was representative of plant conditions and provided more realistic head loss results. The licensee cited three reasons for concluding that the higher rate of the debris settlement is prototypical. The reasons are:

- During testing, the debris was introduced within one ft of the strainer surface. In the plant, most debris would have to travel a significant distance to reach the strainer, allowing more time for the debris to settle.

- The test mock up did not include the back side of the strainer--the side facing the outer containment wall. (See Figure 3.6-2 for a conceptual test set up with this configuration.) The back side of the strainer would likely benefit from significant settling with the front side acting as a debris interceptor.

- In the plant, there would be significant flow parallel to the face of the strainer (at 90 degrees to the pocket openings). Therefore, a turbulence condition would exist which would tend to agitate debris off the floor, onto only a few of the modules and only onto the front sides of those modules in the plant.

The staff has considered these arguments and agrees that they are reasons that allowing credit for settlement may be appropriate. However, the degree of settlement should be correctly determined by prototypical testing of the plant configuration or other analytical demonstration of the settling. The testing should include debris with characteristics that are similar to those in the plant.

Test 4 was a full debris load test with RMI. Based on the results of Test 4, CCI concluded that RMI tends to reduce head loss when added to the debris mix. This conclusion is consistent with staff observations at other tests.

Test 5 was the first chemical effects test performed for Salem and was the qualification test for the strainer. The qualification testing was conducted using only full-load debris based on Test 1. Test 1 results indicated that the full load was limiting and not the thin-bed. However, a thin-bed may be the more limiting case. Therefore, the conclusions reached in the preliminary head loss calculation [35] are potentially non-conservative.

Test 5 was run with the full debris loads, including RMI, and up to 140 percent of the chemical load predicted to potentially be present in the Salem post-LOCA sump. The debris settlement was observed to be about 80 percent for this test. The test was run for 16 hours at the scaled 9000 gpm after all debris was added to the loop. At that time, the flow was reduced to a scaled 5110 gpm. Just prior to reducing the flow, head loss was 2.6 ft. When flow was reduced, head loss decreased to 0.9 ft. The test was run for an additional 12 days at the reduced flow rate. During that time, the head loss increased, relatively linearly, to 2.0 ft. Just before test termination, the test flow was increased to the scaled 9000 gpm rate. Head loss at the higher flow rate was measured at 2.4 ft. Based on the limited increase in head loss with a significant increase in flow, some channeling or bypass may have occurred during the test, possibly when the flow rate was increased.

The results of Test 5 show that the commonly used termination criterion of one percent change in 30 minutes is not adequate to determine the final head loss. During most of the test run at the lower flow rate, the change in head loss met this acceptance criterion. However, over the course of several days, head loss increased by 113 percent. The final head loss value was

extrapolated out to a 30-day mission time. This test was used for the input to the preliminary head loss calculation that was reviewed by the staff during the audit.

Test 6 was a repeat of Test 5 except that it included no RMI and was run for a shorter time. Based on this test, the licensee concluded that the head losses for Tests 5 and 6 were similar at the 100 percent chemical loads thus indicating repeatability.

In general, the licensee evaluation of test results was reasonable. There was evidence of break through or channeling in the debris bed when head loss reached high values and when flow was increased. This phenomenon negates the ability to scale the head loss results to higher temperatures based on a viscosity relationship. Some of the test results did not appear to indicate channeling. Test 5, the test used for the preliminary evaluation of head loss for the strainer (qualification), did not have indications of break through until the flow was increased at the end of the test. The staff believes that it would be appropriate to verify that break through, channeling, or bore holes have not occurred by decreasing flow at the end of the test to verify that the head loss to flow (velocity) relationship is relatively linear. The conclusion that the high amount of settling experienced was prototypical has not been sufficiently demonstrated because the flow conditions in the test and the debris used were not shown to be prototypical of the plant conditions as previously discussed.

The clean strainer head loss measured in the test flume was not representative of what would be experienced in the plant. The test strainer module was similar to the plant strainer modules, but the plant contains a long train of the modules connected end to end. There are also additional plant head losses associated with flow through the Z-shaped duct that attaches the first module to the suction box that were not tested. The exit losses associated with the discharge of the fluid into the suction box were also not tested. These losses were calculated and added to the debris head loss in the preliminary head loss calculation. These piping head losses are evaluated in detail in the next section.

Based on the measured head loss test data, the licensee used an extrapolation methodology to calculate the debris bed head loss at the various fluid temperatures expected following a LOCA. The methodology included a time-based debris head loss because head loss was observed to increase continuously over the course of the test. This increase was extrapolated out for 30 days. The methodology also accounted for the change in the strainer hardware portion of the head loss that occurs as the strainer becomes loaded with debris.

For the temperature scaling, the licensee assumed that the head loss is directly proportional to the absolute fluid viscosity. A factor for chemically laden water viscosity was also included. This factor results in a reduction of head loss at higher temperatures different than what would normally be credited using a normal viscosity correction based on temperature. Data for this viscosity correction were taken from the NRC's ICET #1. It is not clear that the ICET data is applicable to the viscosity correction of the Salem test data because the physical properties of the fluids were not compared. A more appropriate method of crediting additional viscosity correction may be to measure the viscosity of the test fluid at various temperatures. Where no channeling is present, viscosity correction is an appropriate method. The staff agrees in principle with viscosity correction, but questions the use of the chemical correction factor.

Curves were plotted showing the time-dependent and temperature-dependent head losses associated with the strainer. With the exception of the viscosity correction factor for chemicals, the staff found these methods acceptable,. However, based on the results of the preliminary calculation it appears that head loss exceeds the design allowable. Therefore, the licensee is

proceeding with a new testing program that will provide a test setup that is more prototypical of the plant arrangement (Figure 3.6-2). A final evaluation of the acceptability of the head loss for Salem cannot be completed by the staff until the testing is completed and a finalized head loss calculation is provided for review. The need for the licensee to provide the results of the updated head loss testing and the associated finalized head loss calculation is designated as **Open Item 3.6-1** and is presented in detail in Section 3.6.6.

3.6.4 Clean Strainer Head Loss Calculation

The CCI strainer design uses pockets to increase the available surface area to distribute any debris. The very large surface area results in extremely low head loss across the surface at design flow rates. However, there are internal losses associated with the strainer and the connecting piping between strainer modules and between the modules and the ECCS pump suction box. Because the strainer is a long train of modules with one end connected to the sump suction box, and the design does not include any flow control design to ensure uniform approach flow, the differential pressure and therefore the flow into the clean strainer will be greater near the pump suction. The strainer hardware component of the head loss will change as the strainer loads non-uniformly with debris. The strainer hardware head loss was divided into two parts. The first part is associated with the strainer modules and the interconnecting duct. The second part of the head loss is associated with the Z-shaped duct that connects the first strainer module to the sump suction box. The ECCS pump suction piping is connected to the suction box. The strainer hardware head loss calculation also includes the losses resulting from the flow of water out of the Z-shaped duct and into the suction box. The staff review of these two aspects of the clean strainer head loss calculation is discussed in the following subsections.

3.6.4.1. Clean Strainer Head Loss

The vendor calculated the total clean strainer head loss for the strainer modules and the piping connecting them using a standard single-phase hydraulic analysis [36, 44]. The analysis was put into an Excel spread sheet and calculated iteratively to model the progressive loading of the strainer with debris. In this way, a relationship between strainer hardware head loss and debris head loss was created. With a clean strainer, most of the fluid flow into the train enters the first strainer module (nearest the pump suction). As the modules progressively load with debris, the flow through the modules becomes more balanced. This phenomenon results in a strong relationship between debris accumulation and the strainer hardware portion of the head loss described in Section 3.6.4. The initial higher flow rate through the strainers close to the pump suction would result in initial higher debris loading on their surfaces because higher flow rates will result in more debris deposition on the strainer surface.

A key assumption for this evaluation is that each module's debris head loss is proportional to average flow rate through the module multiplied by the average amount of debris on that module. This assumption appears to be valid based on the results of Test 1 [36]. However, if future testing finds that a thin-bed can result in a significant head loss, this assumption will have to be reassessed because, for a thin bed, head loss is not proportional to debris accumulation. It was also assumed that debris accumulation is proportional to flow through a module. In general, this is a valid assumption based on relative homogeneity of debris throughout the sump pool. One consideration contrary to this assumption is that there will likely be less debris behind the strainer (next to the outer containment wall) at Salem at the onset of recirculation. It is likely that as the event progresses, more fine fiber will transport to the back of the strainer. In any case, a reduction in debris on one side of the strainer would result in a lower clean strainer head loss due to less flow resistance near the pump suction and the calculation would be

conservative. The lower resistance in these areas would result in higher flow volume through these modules and eventual loading with debris.

The head loss from the channels between the pockets was found to be negligible [44].

The licensee performed its iterative clean strainer head loss calculation following standard hydraulic relationships. The basis for the licensee's clean strainer head loss calculation is therefore acceptable to the staff.

3.6.4.2 Z-Shaped Duct and Suction Box Head Loss

The new strainer assembly is attached to a Z-shaped duct that takes the discharge of the first strainer module and directs the flow into the sump box. The Z-shaped duct has a relatively complex geometry, so CCI determined that the best method to perform an evaluation of its head loss was through a CFD calculation. The CFD calculation is presented in [44]. The CFD calculation used reasonable assumptions and boundary conditions and found that the head loss associated with the duct and the exit losses into the sump box are 1.86 ft for the 9000 gpm condition and 0.606 ft for the 5110 gpm condition.

The sump box is in the same location and has similar physical dimensions to the original sump strainer enclosure. The sump box head losses including entrance losses for the flow entering the ECCS pump suction pipe were already included in the Salem NPSH calculations. Therefore, head losses did not need to be calculated by the licensee for the sump box.

The losses associated with the clean strainer take place in the turbulent flow regime. They are not strongly affected by temperature and are therefore not scalable with temperature.

Because the head loss across the strainer is greater than the strainer submergence, the licensee's assumption of single-phase fluid flow is questionable. Since the final analysis for the strainer had not been completed at the time of the audit, the staff was not able to draw a conclusion about the single-phase assumption. However, the licensee has obtained a license amendment [45]. It states that the containment pressure value will be equal to the initial air pressure in containment prior to the LOCA (i.e., the pre-accident partial air pressure in containment). However, when the sump vapor pressure exceeds the containment initial pressure, then the containment pressure will be taken to be equal to the sump vapor pressure. Also, at higher fluid temperatures, head loss is usually scaled to be less than at lower temperatures due to the temperature effect on viscosity. The final strainer head loss calculation should demonstrate that the submergence of the strainer is adequate to preclude flashing throughout the most limiting postulated scenarios.

Based on the above, the total clean strainer head losses of 3.02 ft and 0.98 ft, at 9000 gpm and 5110 gpm respectively, were arrived at using acceptable methods. The assumptions of no thin-bed and single-phase flow throughout the event require verification based on future testing and should be documented in the final head loss calculation. These assumptions should be verified as part of **Open Item 3.6-1.**

3.6.5 Vortex Evaluation

The licensee and its strainer vendor investigated the possibility of vortex formation as part of the strainer array testing program. The strainer is predicted to have at least three inches of submergence during a LOCA. Testing has shown vortexing to be very unlikely as long as the strainer is submerged. However, the licensee has observed vortex formation following the formation of a debris bed on the strainer if pumps are stopped and restarted. Stopping the

pump releases air that has accumulated inside the strainer. The air release can clear small localized areas of the strainer. When the pump is restarted, high velocity flow areas are created in the cleared areas. These high-velocity zones are more prone to causing vortex formation. The licensee evaluated the margin to vortex formation for the Salem strainer using empirical data and a relationship between the Froude number and relative height of water above the strainer. The licensee conservatively used the structural limit of 4.0 meters of head loss for the strainer as the limiting head loss for vortex formation evaluation. The evaluation also conservatively demonstrated that reducing strainer submergence by 50 percent would not result in vortex formation. The evaluation assumed that the Salem strainer had a perforated top plate. The Salem strainer top plate is solid. The perforated plate is more likely to allow vortex formation. Based on this evaluation, the licensee concluded that there is adequate margin between operating conditions and the formation of a vortex [39].

During multifunctional test loop testing, no vortexing was observed. However, submergence was greater than predicted in the plant due to the test setup that had the top rows of pockets blanked off. The upcoming testing plans to test the strainers with prototypical submergence.

The vortex evaluation was reviewed during the audit. The staff finds that the vortex evaluation was conducted adequately and has confidence that the strainer will not entrain air, due to vortexing, under postulated conditions. However, it is recommended that the future strainer testing also include observations for signs of vortex formation with prototypical water levels.

3.6.6 Head Loss Calculation

The results of the calculation incorporating data from the clean strainer head loss calculations and plant-specific head loss tests scaled to 9000 and 5110 gpm show that the design maximum head loss of 7.18 ft (both units) and 1.8 ft (Unit 1)/3.15 ft (Unit 2) could be challenged for the worst case expected LOCA debris loading at the design accident temperature.

Running a long-term test for over 12 days was very informative and provided a basis for extrapolation of the head loss testing results to the mission time of the strainer. Extrapolation of the data in the head loss calculation was conducted appropriately.

The temperature scaling methodology used in the head loss calculation was appropriate. However, testing should ensure that no boreholes or channeling are present in the debris bed to show that scaling of the test results is valid.

The clean strainer head loss calculations were appropriately conducted, given the assumptions based on preliminary testing and their conclusions support the overall head loss calculation.

Several issues associated with strainer head loss and potentially impacting the final results of the calculation were identified during the audit. To address these issues, **Open Item 3.6-1** was generated for Salem to provide the results of the updated head loss testing and the associated finalized head loss calculation. Under **Open Item 3.6-1** the following issues should be addressed in the upcoming testing and final head loss calculations:

1) The preparation of fibrous debris combined with the transport of the fiber to the test strainer may not have been prototypical of the plant. Based on the licensee transport calculation [13], a significant portion of very fine, suspended fibrous debris is expected to arrive at the strainer. A small amount of small fibrous debris is also predicted to transport. Testing should include appropriate fiber preparation and transport to ensure prototypical bed formation. Testing should identify whether a thin-bed forms.

2) The preliminary testing and head loss calculation showed that the design head loss could be exceeded during the most limiting LOCA conditions. The future testing and head loss evaluations should verify whether NPSH margin exists for the ECCS pumps.

3) Strainer head loss exceeds the strainer submergence. This condition should be evaluated for flashing, if applicable, based on future testing.

4) Bounding amounts of particulate debris should be used for testing on a given unit. The amount of Min-K® that the licensee included in its testing intended to be applicable to both units was based on Unit 1, though Unit 2 contained a significantly larger amount of this insulation.

5) Future testing should be conducted with prototypical water levels to allow for valid observations for vortex formation.

6) If testing shows that a thin-bed forms and that head loss is not proportional to debris loading, the clean strainer head loss calculation should be re-evaluated.

7) The void fraction downstream of the strainer should be evaluated as part of the final strainer calculation.

8) After the results of the testing have been analyzed, the licensee should verify whether the single-pump operating case is more limiting than the two-pump operating case.

3.7 Net Positive Suction Head

3.7.1 Audit Scope

The licensee performed net positive suction head (NPSH) margin calculations for pumps credited with taking suction from the containment recirculation sump to provide long-term recirculation cooling to the reactor core and containment building following postulated accidents. At Salem Unit 1 and Unit 2 these recirculation pumps are low-head RHR pumps.

The staff reviewed the significant models and assumptions of the licensee's NPSH calculations and discussed these calculations with licensee personnel during the audit. The staff's review used guidance provided by NRC Regulatory Guide (RG) 1.82 [26], NRC Generic Letter 97-04 [46], the NRC Audit Plan [47], Nuclear Energy Institute (NEI) 04-07, the Guidance Report or GR [6], and the NRC Safety Evaluation Report on NEI 04-07, the SE [3].

3.7.2 ECCS Configuration in Recirculation Mode

The ECCS consists of two parallel trains, each consisting, in part, of a SI pump, a centrifugal charging pump, a CS pump, and an RHR pump. During the safety injection phase of a LOCA all pumps are started automatically and take suction from the RWST. Four accumulators discharge into the four RCS cold legs during injection. Also, the SI and charging pumps discharge into the RCS cold legs, the CS pumps discharge to the containment building spray headers, and, after accumulator pressure decreases sufficiently, the RHR pumps discharge to the cold legs [48, p. 6.3-7].

The operator begins to switch over from injection to recirculation when (1) the containment sump water level instrumentation indicates that there is sufficient water on the containment floor to provide the required net positive suction head for operation of the RHR pumps, and (2) the

RWST low level alarm sounds. In that process, the SI charging and RHR pumps are isolated from the RWST, and the two RHR pumps are aligned to take suction from the containment sump. Each of the two RHR pumps discharges directly to two cold legs. Each RHR pump also provides suction pressure for the SI and charging pumps and flow to a containment spray header. The SI and charging pumps each provide flow to four cold legs. One CS pump continues injection from the RWST after the low level alarm, and is turned off when the low-low level alarm activates. Later, in the hot leg recirculation phase of the LOCA, one of the RHR pumps is realigned to provide flow to two hot legs through the SI pumps in order to complete cooling of the core. One RHR pump would be configured to provide flow to two cold legs [48, p. 6.3-39].

The ECCS recirculation configuration that was determined by the licensee as having the limiting NPSH margins for the RHR pumps has one RHR pump inoperative. This condition has a crossover flow path from the discharge of the operating train RHR pump to the discharge side of the RHR pump of the non-operating train. This single-pump, dual flow path ECCS configuration is the one of least hydraulic resistance and therefore maximum flow rate for any RHR pump. This is discussed further in Section 3.7.3.

3.7.3 NPSH of the RHR Pumps

3.7.3.1 Summary Presentation of NPSH Results

The licensee performed NPSH and allowable head loss calculations for the Salem 1 and Salem 2 RHR pumps for both cold leg and hot leg recirculation. Calculations included cases assuming two RHR pumps running and cases assuming one RHR pump running. Of these cases, the most limiting configuration was identified as one RHR pump running. With one pump running, a portion of the discharge crosses over to the piping system of the non-operational pump, creating a relatively low-resistance flow path that leads to the worst case (highest) estimated flow rate for each pump.

The results for the most limiting cases are shown in Table 3.7-1. The NPSH results are presented in Table 3.7-1 below, and are applicable for both large- and small-break LOCA conditions. In Table 3.7-1 NPSHa designates NPSH Available and NPSHr designates NPSH Required. NPSH Margin is defined as NPSHa less NPSHr. The Maximum Allowable Head Loss [37, p.12] computed by the licensee is equal to NPSH Margin minus “retained margin,” a 0.90 ft element of conservatism in the head loss calculation. The results do not include the hydraulic losses attributable to the clean sump screen and accumulated debris.

Table 3.7-1 Assumed Operating Conditions and NPSH Margin Results for RHR Pumps

Unit	RHR Injection Mode	Sump Water Temperature (°F)	Pump Flow Rate (gpm)	NPSHa (ft)	NPSHr (ft)	NPSH Margin (ft)	Licensee's Allowable Head Loss (ft)
1	RHR (cold leg recirculation)[1]	260	5110	27.7	25	2.7	1.8
2	RHR (hot leg recirculation)[1]	260	4980	28.04	24	4.04	3.14
1	RHR (cold leg recirculation)[1]	150[2]	5110	42.7	25	17.7	16.8
2	RHR (hot leg recirculation)[1]	150[2]	4980	43.1	24	19.1	18.2

[1] The licensee's NPSH and strainer Allowable Head Loss calculations were performed for the most demanding system configuration, with respect to NPSHr, in which one of two RHR pumps is secured.
[2] For this temperature the licensee includes the pressure difference term of the equation for NPSHa, where the pressure difference equals the initial containment pressure minus the vapor pressure at the sump water temperature.

The licensee presented NPSH Margin and Allowable Head Loss calculations for sump water temperatures ranging from 60°F to 260°F, representing various times during LOCA accident progression. Two rows in Table 3.7-1 present NPSH results for the peak sump pool temperature of 260°F, which occurs at switchover from safety injection to recirculation. At this temperature the licensee conservatively assumes that the difference between the containment pressure and the sump water vapor pressure is zero (no containment air over-pressure to add to the NPSHa value). For comparison, two NPSH results are presented in Table 3.7-1 for a temperature of 150°F, which occurs at approximately 28 hours following the LOCA initiation.

The considerably larger values of the NPSH Margin and Allowable Head Loss at the lower temperature are attributable to the credit taken by the licensee for the contribution of the pressure difference term of the equation for the NPSHa. The licensee conservatively assumes that steam in containment does not contribute to the pressure difference term in the NPSHa equation, as recommended in [26]. The pressure difference is calculated as the difference between the initial air pressure in containment prior to the LOCA minus the vapor pressure of the water at the sump water temperature. The licensee includes this pressure difference as long as the vapor pressure is less than the initial containment pressure.

3.7.3.2 Summary of the NPSH Margin Calculation Methodology

The definition of NPSH Margin from Regulatory Guide (RG) 1.82, "Water Sources for Long-Term Recirculation Cooling Following a Loss-of-Cooling Accident," Rev. 3 (November 2003) [26] is NPSH available (NPSHa) less NPSH required (NPSHr). RG 1.82 defines NPSHa as the total suction head of liquid, determined at the first stage impeller, less the absolute vapor pressure of the liquid. RG 1.82 defines NPSHr as the amount of suction head, over vapor pressure, required to prevent more than three percent loss in total head of the first stage of the pump at a specific capacity (due to factors such as cavitation and the release of dissolved gas). For convenience, NPSH values are generally reported as pressure heads, in units of feet of water.

NPSHa is defined in [26] as the difference between the containment atmosphere pressure at the surface of the containment pool and the vapor pressure of the sump water at its assumed temperature, plus the level of water from the surface of the containment pool to the pump inlet nozzle centerline, minus the hydraulic losses for the flow path from the flow inlet at the containment floor to the pump inlet nozzle (not including the head loss contribution from the sump strainer and debris bed). The licensee used this formulation [37, p. 5], not crediting containment pressure above the liquid saturation pressure for pool temperatures above 193.7ºF and crediting the initial containment pressure (see Table 3.7-1, note 2) at pool temperatures at or below 193.7ºF. This method is acceptable because it follows the guidance in RG 1.82 [26].

The licensee defined a “maximum allowable sump screen head loss” as NPSH Margin minus a retained margin (for conservatism) in the licensee’s NPSH and Allowable Head Loss calculations and is specified to be 0.9 ft of water [37, p.14]. The results for “Allowable Head Loss” are presented in [37, p. 16, 17] and [37, Attachment 2, pp. 1-4].

Based on the audit review, the staff concluded that U.S. industry standard definitions and standard practice calculation methodologies associated with NPSH margin analysis were used in the licensee's calculations. Therefore, the calculations are considered acceptable. A more detailed review of the main parameters influencing the calculated NPSH Margin for the RHR pumps is provided below.

3.7.3.3 Consideration of Main Parameters Influencing the NPSH Margin

Main parameters potentially influencing pump NPSH margins are the water height from sump pool surface to pump inlet nozzle centerline, sump water temperature, containment atmosphere temperature, pump flow rates, containment pressure, pump NPSHr values, the hot fluid correction factor, and piping network hydraulic losses. These parameters are discussed below.

Pressure Difference Term

The pressure difference term that is part of the NPSHa formulation is the pressure of the containment atmosphere at the surface of the containment pool minus the vapor pressure of the sump water at its temperature at the RHR pump inlet.

At Salem, based on a LAR approved by the NRC [50] shortly after the site audit, there are two methods of calculating this term depending on the sump water temperature. When the vapor pressure associated with the sump water temperature is less than the initial partial air pressure of containment, the pressure difference term is calculated as the difference between the partial air pressure and the vapor pressure. When the vapor pressure associated with the sump water temperature is above the partial air pressure of containment, the term is taken to be zero. As discussed in [50], the staff finds this portion of the NPSHa analysis to be acceptable.

Minimum Water Level

The minimum sump water level is computed by the licensee in [38] using the volume of water available from the accumulators, the RCS and the RWST. The licensee calculated the water level for the NPSHa calculation as the minimum static height of liquid as measured from each RHR pump suction centerline to the surface of the pool in containment. The RHR pump suction centerlines are at a plant elevation of 46.83 ft [37, p.8]. Reference [50] approved this formulation of the static head above the ECCS pumps, rather than the original FSAR calculation from the top of the sump (containment floor level) to the ECCS pumps.

The licensee used recirculation sump water level instrument indication as part of the decision logic required for operators to manually initiate ECCS switchover to recirculation cooling. Both a sump water level indication of 80ft-11in. (which includes allowance for instrument error), and a RWST low-level alarm are required by procedure for operators to begin switchover from RWST injection to sump recirculation. The sump level indication is used to confirm that the RWST volume was pumped into the containment and not elsewhere (through a leak).

As discussed in Section 4.2 of this audit report, the licensee installed two new redundant sump level switches, LD-20255 and LD-20256, with a reduced instrument uncertainty of plus or minus 0.75 inches. These new instruments are in addition to existing sump level instruments (LT-938/LT-939), which have a much lower degree of accuracy. The two new redundant level switches provide the control room operators with a status light indication that the sump level has reached the 62 percent sump level criteria to support entrance into the recirculation phase of operation.

The licensee accounted for fill-up of sump cavities and tunnels in containment, and the displacement of water caused by the presence of structures of various types [51]. The licensee correctly included the mechanisms that would be responsible for preventing volumes of water from flowing to the containment pool, thereby limiting the water level. These include retention of water in the normally dry containment spray header, retention of water as vapor in the containment atmosphere, and condensation on surfaces.

In the version of [38] that was provided to staff prior to the audit, the spray droplet holdup mechanism was not calculated. This was pointed out to the licensee during the on-site audit and was noted as an Open Item at the audit exit. The licensee subsequently provided an updated version of [38] that contains the analysis of this holdup mechanism. The staff has reviewed Appendix K of [38]. The model provides a realistic estimate of the holdup of droplets based upon the containment spray flow rate, droplet size and the droplet terminal velocity. The result of the calculation is an insignificant reduction of the sump water level. Staff accepts the revised analysis in [38] as conservative.

For the limiting minimum containment water level, the licensee conservatively assumed a break location that would direct the water to the reactor pit, an assumption which requires that the pit be filled before beginning to overflow to the containment floor. Additionally, the licensee assumed that the RCS would be totally refilled with water during the injection phase of the LOCA (reflood), thereby minimizing the volume of water available to raise the water level in containment. The static level of water was realistically calculated assuming that the density of the sump water is equal to the density of saturated water at the sump temperature.

As discussed above, a sump water level of 80ft-11in. is required for operators to initiate the switchover. The licensee's calculation [38, p.24] shows that at the RWST low-level set point, the containment water level is below 80ft-11in. The calculation also states that during switchover, one train of containment spray, safety injection, and charging pumps continue to draw water from the RWST until the low-low set-point is reached. This switchover sequence is also described in the Salem UFSAR [48, Table 6.3-6]. The additional water volume available from the RWST for both Units 1 and 2 would increase their sump water levels to the required 80ft-11in. The staff concludes that the minimum post-LOCA containment water level would be greater than the minimum of 80ft-11in. The RWST low-level alarm is used to alert the operators that the RWST water volume is nearly depleted and to prepare for switch-over.

Sump Water Temperature

The licensee performed a range of parametric NPSH calculations as a function of sump water temperature in the range from 260ºF to 60ºF. This temperature range is reasonable, since LOCA calculations [37, Attachment 2, pp. 2-16; 19] demonstrate that the sump water temperature during recirculation peaks at 258ºF at the time of switchover from injection to recirculation and decreases monotonically thereafter. The chosen temperature range is reasonable not only because it encompasses the peak temperature of 258ºF of the recirculation cooling phase of the LOCA transient, but it also bounds the temperature at the 30-day mission time [33], estimated to be 110 ºF [37, p.15].

Each sump water temperature selected by the licensee was used to establish the vapor pressure value in the pressure difference term of the NPSHa equation (see the Pressure Difference Term section above for the exact use of this vapor pressure value in the pressure difference term). The suction head losses for all temperatures were conservatively computed using a temperature of 60ºF that maximizes fluid density and viscosity and therefore head loss [37, p.12].

Containment Atmosphere Temperature

The containment atmosphere temperature is used by the licensee to compute the mass of steam that is held up in the containment atmosphere and does not contribute to the mass of water in the sump, reducing the final value of the Minimum Water Level.

The mass of steam in the atmosphere was computed by the licensee by conservatively assuming the containment atmosphere is saturated with steam for various selected temperatures during sump recirculation, thereby achieving maximum calculated containment steam water mass holdup [38, Attachment E].

The staff accepts that the model used to compute the steam holdup in the containment atmosphere is conservative and that the temperatures used in the calculations adequately represent the containment atmosphere temperatures during the LOCA transient.

Pump Flow Rates

The RHR pump flow rate that is used for the suction head loss contribution to the NPSHa calculation and for estimating the NPSHr is computed using a hydraulics code called PEGISYS, which is capable of estimating the maximum flow rate through either or both of the two RHR pumps. The licensee uses the PEGISYS computer code [53] to perform steady state hydraulic calculations for a number of ECCS system configurations involving the recirculation phase of LOCA scenarios.

The PEGISYS code is a Westinghouse-proprietary thermal hydraulics code that computes the flow and pressure distribution in flow networks on the basis of conservation of mass and momentum. The staff has not reviewed this code for the current application. However, it is staff's judgment, based upon the description of the code that has been provided by the licensee [54], that the PEGISYS code is similar to other industry-standard hydraulic computer codes [55], has been verified and validated for nuclear applications according to Westinghouse quality assurance procedures [54], and is, therefore, very likely to be adequate for use in computing Salem flow rates.

Calculations using PEGISYS for both Units 1 and 2 were performed for pump configurations involving cold leg injection, hot leg injection, and configurations involving recirculation spray. These calculations provide the flow rates for RHR pump operation for each of these configurations [37, p.3]. NPSH calculation results are shown in Table 3.7-1 above for the cases involving the limiting flow rates. The calculations are documented in Westinghouse-proprietary reports. The staff was provided access to the relevant documents at Westinghouse offices. The following is based upon a reading of the documents [56].

- The staff confirmed that Westinghouse calculations, the results of which are presented in Table 3.7-1, were performed for the limiting scenario which assumed that both RHR pumps initially operate in the cold leg recirculation mode, each feeding their respective cold-legs, SI pumps, and charging pumps. The calculation then assumes that one of the RHR pumps fails. NRC staff confirmed that the calculation assumes a “loop-around” configuration with crossover flow from the operable RHR train discharge line to the inoperable RHR train discharge line. While this case does not specifically address the recirculation operating mode of the containment spray system, it is considered limiting, as discussed in the next paragraph. The limiting flow rate for Unit 1 is calculated to be 5110 gpm and for Unit 2 4980 gpm.

- The staff confirmed that the Westinghouse documentation reported that loop-around flow was also considered for cases involving containment spray during recirculation [56]. For the cases with containment spray, the licensee performed calculations assuming that either RHR pump fails. The calculation showed that the case without containment sprays is limiting because, in the “loop-around” flow configuration, flow is limited by the hydraulic resistance of the containment spray system (caused by the combination of the high elevation of the spray header and by the flow resistance of the spray nozzles). This combination leads to “essentially zero” flow to the spray headers [56]. The net result of this alignment is that the computed flow rates are bounded by the case discussed above in which both RHR pumps provide cold leg injection and one of the RHR pumps fails. Note that with two pump operation, the pumps ride higher on the pump curve and overcome the system resistance. However, this is not the limiting NPSH case.

- For the case of an RHR pump failure during hot leg recirculation, the Westinghouse calculated flow was 4978 gpm and was rounded up to 4980 gpm.

Based on a review of the above analyses, the staff concludes that the flow rates used in the NPSH analyses were computed based on hydraulic models that maximized the flow through the ECCS during recirculation cooling.

<u>NPSH Required and the Hot Fluid Correction Factor</u>

The NPSHr specification for the pumps was presented in the form of pump curves from the pump manufacturer [37, Attachment 6]. The NPSHr values shown in Table 3.7-1 were taken from the pump curves and were discussed in [37, p.13]. The original pump curve established in 1971 was extrapolated by the pump manufacturer in 1997 from a maximum flow rate of 4700 gpm to 5500 gpm, and was then used by the licensee to estimate the NPSHr at 5100 gpm. It is staff’s judgment that this extrapolation is acceptable based upon the manufacturer’s experience and the limited extent of the flow rate extrapolation that was required.

NPSHr values for centrifugal pumps are generally determined using testing with the working fluid at room temperature. However, evidence exists that the NPSHr decreases with fluid temperature, and that the NPSHr for a given pump and working fluid measured at room temperature may be reduced for operation with that working fluid at high temperature [57, p.39]. Temperature-dependent NPSHr reduction factors have been proposed [57, p.41]. However, Regulatory Guide (RG) 1.82 [26], Section 1.3.1.5, provides guidance that the NPSHr used in NPSH margin analysis should not be reduced based upon the operating temperature of the working fluid. Neglecting the effect of temperature on NPSHr is conservative, and the staff confirmed that this factor was appropriately not used in the licensee's NPSH margin calculations.

Piping Network Head Loss

Piping network head loss analysis and results were presented in [37, Attachment 10] and in [54, 55]. The head loss methodology was presented in [54] and included a schematic diagram of the suction-side piping layout used for the calculation. The calculation included pipe friction losses and “minor losses” across valves and fittings. The information compiled in [54] was collected by the licensee in spreadsheet format.

The head losses were computed by the licensee using a model that accounts for the influence of chemical effects [37, p.9]. Head loss is computed as the sum of pipe friction losses and minor losses due to valves and fittings. Pipe friction head loss increases with the fluid kinematic viscosity (viscosity divided by density), and the kinematic viscosity of sump water may be influenced by the presence of constituents that are the byproduct of chemical reaction. As a result, the licensee’s model assumes that the chemical effects influence the pipe friction losses. The model assumes that the fluid properties do not influence the minor losses. The assumption that the minor losses due to valves and fittings are not affected by the altered fluid properties is a reasonable first approximation, since generally these head losses depend on the altered geometry created by the valves and fittings and the loss coefficients are not strongly dependent on fluid properties.

The effect of chemical effects on kinematic viscosity is estimated using data from the NRC’s ICET test program [37, Ref. 22]. The kinematic viscosity is taken as a factor of 1.9 times that for pure water for all temperatures considered. The friction head loss results were not significantly affected by the effect of increased kinematic viscosity.

Head loss calculations were performed at two sump water temperatures, 60ºF and 260ºF, and for the two flow rates shown in Table 3.7-1. The higher head loss at 60ºF was conservatively used for the head loss calculation.

The head loss model employed standard engineering practices for computing head losses in piping networks, and the flow rate input values for the head loss calculations were conservatively based on the crossover flow configuration. Therefore, the staff finds the licensee’s approach to be acceptable.

3.8 Coatings Evaluation

3.8.1 Coatings Zone of Influence

As stated in the NRC SE, for protective coatings, the staff position is that the licensees should use a coatings ZOI spherical equivalent distance determined by plant-specific analysis, based on experimental data that correlate to plant materials over the range of temperatures and

pressures of concern, or a default value of 10 pipe diameters (L/D). The licensee applied a spherical ZOI equivalent to a radius of 5 pipe diameters, based on jet impingement testing conducted by Westinghouse. The test data referenced by the licensee is documented in WCAP-16568-P [58]. The staff has reviewed this WCAP and determined that its application in Salem's analyses is acceptable because the Salem coatings are within the scope of the test data. The staff therefore finds the licensee's treatment of the ZOI for coatings acceptable.

3.8.2 Coatings Debris Characteristics

As discussed in section 3.8.1 of this report, the licensee applied a ZOI of 5 L/D, in which all coatings were assumed to fail as 10 µm particulate. For coating debris outside of the ZOI, the licensee assumed that all of the unqualified and degraded-qualified coatings will fail as 10 µm particulate. The licensee assumed 100 percent transport of coatings debris to the strainer surface.

The NRC staff's SE [3] addresses two distinct scenarios for formation of a fiber bed on the sump screen surface. For a thin-bed case, the SE states that all coatings debris should be treated as 10 µm particulate and assumes 100 percent transport to the sump screen. For the case in which no thin-bed is formed, the staff's SE states that the coating debris should be sized based on plant-specific analyses for debris generated from within the ZOI and from outside the ZOI, or that a default chip size equivalent to the area of the sump screen openings should be used. Because the plant-specific debris loading for Salem results in a fiber bed across the strainer surface, the staff finds the licensee's treatment of all coatings debris as fine particulate to be acceptable.

During interaction with PWR licensees for resolution of GSI-191, the NRC staff questioned the current industry method of assessing qualified coatings. The staff asked licensees to either prove that their assessment techniques can accurately identify the amount of degraded qualified coatings in containment, or assume all of the coatings fail. In response to the staff concerns, the Electric Power Research Institute (EPRI) sponsored a project (see EPRI Report 1014883 [59]) to collect coating adhesion data for coating systems applied in the containments of operating U.S. nuclear power plants to provide confirmatory support for coating inspection methods that rely upon visual inspection as an initial step. The staff has reviewed this report and determined that it provides adequate supporting evidence that the containment coatings monitoring approach contained in American Society for Testing and Materials (ASTM) D-5163 [60], as implemented by licensees, and endorsed by USNRC in Regulatory Guide 1.54, Rev.1 [61], and NUREG 1801, Vol. 2, Appendix XI.S8 [62], is valid.

The licensee stated that visual inspection at Salem is performed during every refueling outage. The scope of inspection includes all areas of reactor containment (liner, structural steel, floor, wall etc). The inspection is performed in accordance with [60] and PSEG Technical Standard NC.DE-TS.ZZ-6006(Q) titled "Primary Containment Coatings" [63]. The inspection is performed by NACE (National Association of Coating Engineers) certified Level 3 inspectors. The staff finds that the coating assessments performed at Salem are acceptable because they are detailed inspections performed by qualified personnel using industry accepted standards.

During the Salem audit, the NRC staff raised a concern regarding the licensee's treatment of aluminum-based paint in the analyses. The concern was that not all of the aluminum contained in the paint had been accounted for in the chemical effects analysis. This issue was initially flagged as an open item by the NRC in the Salem Draft Open Items memorandum, ADAMS Accession Number ML07295027, a public document. The licensee subsequently revised its analysis to take credit for aluminum paint that remains intact beneath undamaged insulation.

Some of the coatings in question will not become debris following a LOCA because the Nukon insulation lies over them is outside of the ZOI for Nukon, and is, therefore, expected to remain in place. In addition to the reduced amount of aluminum debris resulting from undamaged Nukon insulation, the licensee took credit for the fact that the aluminum paint is only partially composed of aluminum. By reducing some of the original conservatisms in its treatment of the aluminum paint, the licensee was able to bring the total amount of aluminum contributed to the chemical effects analysis to a value bounded by the existing chemical effects analysis. The staff finds the licensee's credit for assuming some aluminum paint remains intact to be well supported and reasonable. Because the staff's concern regarding accounting for all aluminum has been satisfactorily addressed, the staff also finds the licensee's treatment of the aluminum paint acceptable.

4.0 DESIGN AND ADMINISTRATIVE CONTROLS

4.1 Debris Source Term

Section 5.1 of NEI 04-07 [6] and the NRC staff's accompanying safety evaluation (SE) [3] discuss five categories of design and operational refinements associated with the debris source term considered in the sump performance analysis. The categories are:

- housekeeping and foreign material exclusion programs
- change-out of insulation
- modification of existing insulation
- modification of other equipment or systems
- modification or improvement of a coatings program

The SE states that these additional refinements should be evaluated for their potential to improve plant safety and reduce risks associated with sump screen blockage. The staff's discussion below describes the licensee's procedures and planned or completed actions in each of these areas.

4.1.1 Housekeeping and Foreign Material Exclusion Programs

The staff reviewed the Salem Unit 1 and Unit 2 procedures for foreign material exclusion (FME) and closure control for plant systems and components [64], and for containment building cleanness verification prior to returning to power after an outage [65-70]. These plant procedures provide administrative controls to ensure that the debris source term affecting the recirculation sump following a LOCA is bounded by the existing analyses.

The licensee has implemented a procedure-driven containment building closeout process to minimize the amount of loose debris (rags, trash, plastic, clothing, etc.) present in containment that could be transported to the ECCS Sump and cause restriction of pump suctions during LOCA conditions. Plant procedures, described briefly below, are used to verify that the containment building is ready for heat-up and power operations. These procedures satisfy technical specification surveillance requirements and commitments for containment inspection.

Once the containment building is ready for closeout, operations personnel inspect containment for any loose debris in an effort to ensure no loose debris remains which could be transported to the ECCS sump.

The staff reviewed the licensee's Foreign Material Exclusion (FME) procedure [64] and concluded that, if properly implemented, it provides reasonable assurance that inadvertent

introduction of foreign materials into plant systems and components will not occur. If the interior of a closed system or component is accessed, foreign material exclusion controls are implemented, and items taken into and out of these areas are logged.

The containment building is inspected for cleanliness at several stages of power ascension after an outage to minimize the likelihood of presence of any loose debris that may transport to the ECCS sump during a LOCA and cause restriction of pump suction. The procedures implementing these inspections are summarized below:

- The "Containment Walkdown" procedures [65, 66] are implemented for Unit 1 and 2, respectively, prior to entering plant operating mode 3, to visually inspect all elevations and areas of the containment building to spot equipment problems and leaks, check for foreign material (e. g., tape, loose equipment labels, construction/maintenance debris, temporary equipment, coating chips, loose coatings, etc.), and check the containment building sump strainer modules for debris. The inspection team includes one operations supervisor and two operators.

- The "Emergency Core Cooling ECCS Subsystems-Containment Sump" procedures [67, 68] are implemented for Unit 1 and 2, respectively, during plant operating mode 5 or 6, to visually inspect the containment sump to verify subsystem suction inlets are not restricted by debris and that sump components (e. g., trash racks, screens) etc., show no evidence of structural distress or corrosion. The procedure is executed every 18 months.

- The "ECCS-Containment Inspection for Mode 4" procedures [69, 70] are implemented for Unit 1 and 2, respectively, prior to entering plant operating mode 4 to establish containment integrity. Visual inspections are performed in all accessible areas of containment to verify that no loose debris (e. g., rags, trash, clothing, fibrous material, etc.) is present in the containment building that could be transported to the containment sump and cause restriction of a pump's suction during a LOCA.

In an interview with plant operations personnel during the onsite phase of the audit, the NRC staff was informed that the Salem Unit 1 and 2 ECCS sumps are purposely filled with water before containment closeout for normal plant operations. The licensee stated that this is done to reduce the possibility of air ingestion into the ECCS pump suctions during a LOCA.

In 2003, a licensee inspection of the Unit 2 sump showed the presence of a substantial amount of algae in the sump. Salem personnel stated that the sump was thoroughly cleaned and the Unit 1 and 2 procedures were revised to require a thorough inspection of the containment sump during every refueling outage and clean any algae growth. These subsequent inspections showed a very thin film of algae. The licensee stated that the thin film of algae is expected to break down during a LOCA and, therefore, matting is not expected. Further, the small mass of algae is not expected to cause downstream concerns.

The NRC staff accepts the licensee's evaluation that the film of algae formed in the ECCS sump is not expected to cause matting on the strainer or downstream concerns because:

1. The algae film, described as thin, would have minimum mass because the surface area of the water in the ECCS sump is small.

2. The algae film is downstream of the sump strainer and would be dispersed by the pumps and downstream components before being recirculated to the strainers.

3. The initial LOCA temperature would most likely sterilize the algae, minimizing the likelihood of an algae bloom during the 30-day period following the accident.

The staff determined that the licensee's housekeeping and foreign material exclusion programs, including the control of algae, appear to adequately control their respective processes for maintenance of the debris source term, as needed, to maintain adequate ECCS strainer functionality.

4.1.2 Change-Out of Insulation

The staff reviewed insulation modification packages 80090886, Rev 1 [71] (for Unit 1) and 80089513, Rev 1 [72] (for Unit 2). For Unit 1, the insulation modifications have been completed. These modifications involved the replacement of all Cal-Sil and Nukon insulation on steam generator (SG) blowdown and feedwater piping within the ZOIs for these materials. The replacement insulation was Transco MRI®.

For Unit 2, for which the modification plans are the same as for Unit 1, because the blowdown and drain piping is to be replaced and rerouted during the spring 2008 outage, Nukon® insulation has been installed in lieu of RMI. During the spring 2008 outage, this Nukon® insulation will be replaced with Transco MRI®.

Under the two modification packages above, portions of Min-K® insulation on the Unit 1 and Unit 2 hot-leg and cold-leg piping located within the reactor biological shield wall sleeves and reactor pressure vessel motion restrictors have been replaced with Nukon® insulation. Nukon® was chosen over MRI® due to installation and access considerations.

Appropriate note was made of these insulation changes in the debris generation calculation.

Separately, the new Unit 2 steam generators will be insulated with Transco MRI® during the spring 2008 outage. The Salem Unit 2 debris generation calculation reviewed by the staff was based on the steam generators being insulated with MRI®. The licensee requested and received NRC approval to extend the GL-2004-02 compliance due date from December 31, 2007, to March 2008 in connection with the planned Unit 2 steam generator replacement.

4.1.3 Modifying Existing Insulation

The licensee stated that it does not plan to modify existing insulation.

4.1.4 Modify Other Equipment or Systems

Staff reviewed modification packages 80080787, Rev. 1 [73] (for Unit 1) and 80080788 Rev. 3 [5] (for Unit 2) that address modifications to three of the four biological shield wall doors to prevent the holdup of water inside the biological shield wall due to a buildup of LOCA-generated debris in the doorway. The original construction of the inner biological shield-wall doors was wire mesh over steel frame. Because insulation debris could have piled up in front of these doors and impeded the flow of water from inside the biological shield wall to the strainers, the lower 36 inches of mesh on three of the four doorways were replaced with steel bars, spaced no less than 12 inches on center, to allow debris and water to pass through the doorway. The door nearest the strainers was not modified, thus preventing large debris from passing through this doorway. The Salem Unit 1/2 debris transport calculation S-C-RHR-MDC-2056 [13], which

includes the CFD analysis, addresses the effects of these modifications on the transport of debris to the sump. Section 3.5.3.1 of this audit report discusses the Salem CFD calculation in detail.

No other debris source-term related modifications are planned by the licensee.

4.1.5 Modify or Improve Coatings Program

The Salem Coatings Program is discussed in Section 3.8 of this audit report.

4.2 Screen Modification Package

4.2.1 Design Change

The Salem Design Change Package (DCP) replace the ECCS containment sump outer cage and inner screen with ECCS containment sump strainer modules installed along the outer containment wall between the containment sump area and the pressure relief tank. DCP 80080787, Rev. 1, “Salem 1 Containment Sump Upgrades” [73], and DCP 80080788, Rev. 3, “Salem 2 Containment Sump Upgrades” [5], were developed to address the required changes. The DCPs installed interconnected strainer modules with a nominal 4,854 sq feet surface area in Unit 1 and a nominal 4,656 sq ft surface area in Unit 2. These modules are connected to the containment sump to allow the passage of water to the sump and to the RHR pumps. Prior to the design change the screen surface area for both units was a nominal 85 sq ft. The new sump enclosure is a stainless steel structure that covers the ECCS containment sump. The duct from the train of strainer modules enters on one side of the enclosure.

By procedure, the switchover from the ECCS injection to recirculation phase takes place through operator action after the RWST reaches its low level alarm (15.2 feet) and the containment sump water level has reached the minimum of 80ft-11in. (nominal 2ft-11in. above the containment floor) required to commence recirculation. These verifications by the operators ensure that sufficient containment sump level is available for adequate net positive suction head (NPSH) for the RHR pumps. In order to ensure accurate notification to operators that the minimum sump water level has been reached, the DCPs for Salem 1 and Salem 2 installed two new redundant sump level switches, LD-20255 and LD-20256, with a reduced uncertainty of a nominal plus or minus 0.75 inches. These new level indicators are in addition to existing sump level instruments (LT-938/939), which have a higher degree of uncertainty (plus or minus 10.5 inches). The two new redundant level indicators provide the control room with a status light that the sump level has reached the 80ft’-11in. containment level required to support entrance into the recirculation phase of operation.

The Unit 1 and Unit 2 DCPs also modified three of the four bioshield doors to ensure any debris generated would not block the doors and create a holdup volume. Additionally, trash racks were installed in front of the strainer modules to prevent debris from reaching the strainer pockets.

The DCPs referenced calculations in support of the new GSI-191 design basis. These calculations were based on initial analysis performed to determine the size strainer required to handle the existing amount of debris generated in containment. The DCPs documented that these calculations may need to be revised along with the DCPs to reflect the final approved design. Analyses input required to support the development of the final strainer surface area

include debris quantity, debris transport, debris accumulation, downstream effects, fiber bypass, and chemical effects.

The DCPs documented the following test considerations relative to the implementation of the design change:

- Control circuitry checkout for level switches, instrumentation and associated circuitry, including control room indication,

- Functional check of each containment sump level channel, including verification that each level switch and associated instrument operates and that the control room containment sump level indication illuminates.

NRC Staff Audit

The NRC staff reviewed the DCPs to assess the overall PSEG sump blockage resolution approach. The NRC staff observed that PSEG's overall screen modification approach appears reasonable. However, because the adequacy of the new screen design is highly dependent on the acceptability of the various analyses that establish the screen design and its required performance (i.e., debris generation, debris transport, debris accumulation and head loss), further design changes could be necessary as PSEG finalizes the various ongoing aspects of the sump performance evaluation. The analysis of these aspects of the sump evaluation, discussed in other sections of this audit report, will form the technical basis for confirming adequacy of the new sump screen design and other proposed changes to address GL 2004-02.

4.2.2 10 CFR 50.59 Screening Evaluation

The licensee performed a 10 CFR 50.59 screening evaluation of the safety impacts of the containment sump design described in the DCPs. The licensee concluded that the design change does not adversely impact the sump design functions as stated in the Updated Final Safety Analysis Report (UFSAR). Specifically, the screening evaluation addressed the following aspects of the design change and concluded:

- That the replacement containment sump strainer design satisfied the existing design basis condition of 50 percent strainer blockage for NPSH considerations,

- That the GL 2004-02 corrective actions have been adequately completed until fiber bypass testing results, chemical effects testing results, a final vendor head loss calculation, and then a final ECCS and CSS pump NPSH margin calculation are approved and incorporated into the Salem GSI-191 analysis,

- That the addition of two more channels of high accuracy sump level indication do not interfere with the recirculation function, and that the instruments comply with Regulatory Guide 1.97 "Criteria For Accident Monitoring Instrumentation For Nuclear Power Plants,"

- That the elimination of the open sump design precludes issues associated with vortex formation,

- That structural and seismic calculations have been performed and have shown satisfactory results,

- That UFSAR changes required due to the design changes have been implemented.

The 50.59 screening evaluation concluded that the replacement strainer design does not adversely affect the sump design function and meets the existing 50 percent blockage design basis.

NRC Staff Audit

The NRC staff reviewed the licensee's 10 CFR 50.59 screening evaluations for the Unit 1 and Unit 2 sump modification DCPs. The staff noted that the 10 CFR 50.59 screening evaluations appeared reasonable and addressed the full scope of the impacts of the changes required by the modifications. The staff noted that the 10 CFR 50.59 screening evaluations did not address the final determination of downstream effects and adequate NPSH Margin, pending final verification of bypass test results, chemical effects test results, final head loss calculations, and final ECCS and CSS pump NPSH margin calculation. This missing information was appropriately noted within the 10 CFR 50.59 screening evaluations. However, this information was not needed for the evaluation to address compliance with the licensing basis in effect at the time of the onsite audit. The staff did not identify any concerns with the licensee's 10 CFR 50.59 evaluation.

4.2.3 Environmental Qualification (EQ)

In the DCPs the licensee screened the sump design change for equipment qualification impacts. The two new sump level switches were determined to require EQ testing and test result evaluation.

NRC Staff Audit

The NRC staff reviewed the licensee's EQ evaluation for the two new level switches installed. The team determined that the testing results adequately showed that the new level switches had been appropriately qualified for the harsh environment of an accident condition.

4.2.4 Maintenance

The DCP recognized that the new level switches are part of the containment and associated leak detection systems and as such are part of the Maintenance Rule requirements. The DCP also identified the impacted operation and maintenance procedures. PSEG procedure SC.MD-PM.SJ-0011(Q), Emergency Core Cooling Containment Sump Inspection, Revision 2, dated April 12, 2007, provides the requirements for periodic inspection of the containment sumps for Salem Units 1 and 2. This satisfies Technical Specification Surveillance Requirement 4.5.2.d, which requires visual inspection of the containment sump.

NRC Staff Audit

The NRC staff reviewed the applicable Technical Specification (TS) requirement for sump inspection. The staff noted that the inspection procedure which satisfied the requirement was revised adequately to incorporate the changes made by the DCP. Procedure SC.MD-PM.SJ-0011(Q) required, in part, the following checks:

- RHR suction inlets are not restricted by debris and components and show no evidence of structural distress or corrosion,

- The removable containment sump box inspection cover has been installed and gap checks are within acceptance criteria,
- Strainer module hardware is installed and in good condition,
- All cover plates and strainer module connectors are properly installed.

Additionally, the NRC staff noted that the two new containment sump level switches used by the operators to enter into the recirculation phase had been incorporated into the existing sump level channel calibration check procedures. These procedures are S2.IC-CC.WD-0013(Q), 2LT-939 Containment Sump Level Channel II, Revision 9 and S2.IC-CC.WD-0012(Q), 2LT-938 Containment Sump Level Channel I, Revision 9.

5.0 ADDITIONAL DESIGN CONSIDERATIONS

5.1 Sump Strainer Structural Analysis

The licensee performed dynamic and static structural analyses to qualify the new containment sump strainer assembly. The sump strainer assembly, as a whole, consists of approximately 25 individual strainer modules, a series of connection, guide, and sealing plates, and a suction box assembly. A typical strainer module contains six strainer cartridge assemblies (10 or 15 pockets long) which feed water into a central, rectangular duct. The individual strainer modules are bolted together, in series, to form a contiguous central duct which leads to the suction box assembly. The suction box assembly then supplies the water to the containment sump where it is utilized by the ECCS pumps.

Consistent with the guidance of NEI 04-07 [6] and the corresponding Safety Evaluation [3], the sump strainer assembly was qualified for loading combinations associated with dead weight (including debris weight), seismic (including hydrodynamic mass), differential pressure loading due to head loss across the cartridge screens, and temperature effects. Each of the aforementioned loadings was evaluated individually by the licensee and then combined utilizing superposition as described in design calculation VTD 900501 [75]. The licensee used 2004 American Society of Mechanical Engineers (ASME) Boiler and Pressure Vessel (B&PV) Code, Section III [76], Subsection NF, as guidance for the qualification of the sump strainer assembly and its supports.

For the structural qualification, the licensee performed Finite Element Analysis (FEA) using ANSYS computer software to verify the integrity of the strainer module support structure, the standard cartridge assembly, the guide and angle plate components, and certain portions of the suction box assembly. Hand-calculations were performed to address the stresses induced in connection bolts, anchor bolts, and the connection duct link. For the perforated plates in the cartridge assemblies, FEA model data was utilized to assist in performing an equivalent solid plate analysis based on the guidance of Appendix A-8000 of [76].

In accordance with [22], the maximum air temperature during a LOCA is 266°F, and the maximum process fluid temperature is 264 °F. The structure was evaluated at a temperature of 263°F in accordance with Revision 1 of Reference [22], but the staff considers the difference to be negligible.

The damping values which were employed for seismic analysis were 0.5 percent for Operating Basis Earthquake (OBE) and one percent for Design Basis Earthquake (DBE) as stated in Reference [22].

5.1.1 Strainer Module Evaluation

Utilizing a detailed FEA, the natural frequencies were calculated for the strainer modules in air and under submerged conditions. For the condition in which the pool is full, the hydrodynamic water masses were considered in addition to the steel mass. The modal responses were combined using the square root of the sum of the squares combination method (SRSS). All modes with frequencies up to 100 Hz and the first six largest mode coefficients were considered. The SRSS-Method was also used to combine the results for the x, y, and z-directions. For the static analysis, the accelerations corresponding to the calculated frequencies were multiplied by a factor of 1.5 to determine the maximum stresses. The loadings utilized in the stress analysis were the weight of the structure and debris, the pressure differential across the strainer, and the effect of differential pressure against the endplate of the strainer module.

The stresses induced in the connection and anchorage bolts for the strainer modules were also calculated from the output of the FEA in this section.

<u>NRC Staff Audit</u>

Using the criteria and the allowable stresses from [76], the components of the strainer module were shown to be within the acceptable range. It should be noted, however, that [76], a 2004 version, is not specifically endorsed by 10 CFR 50.55a(b)(1). The staff communicated this fact to the licensee for rectification. Upon this notification, the licensee performed an evaluation which concluded that there were no discrepancies between the applicable portions of [76] and the code editions endorsed by 10 CFR 50.55a(b)(1). The staff reviewed this evaluation and found it to be acceptable.

The attachment of a trash rack (constructed of grating and perforated plate) to the anchorage of the strainer modules was addressed by a general statement in Reference [75] indicating, “The dead weight, seismic, and hydrodynamic influence (of the trash rack) can be neglected…” The staff requested the licensee to provide quantitative justification to show the validity of this statement. An evaluation was performed and provided to the staff showing that the additional influence of the trash rack attachment would not cause the anchorage to violate allowable stress values. The staff reviewed this evaluation and found it to be acceptable because the method is consistent with widely accepted industry standards and the design satisfies code-allowable stress limits.

The results of the strainer module structural evaluation are acceptable to the staff as stated above; however, there is a possibility that the analysis will have to be re-run or modified based on the results of strainer head loss and chemical effects testing. In accordance with [1, Rev. 1], the maximum allowable head loss across the strainer module was determined to be 3.15 ft. at 190°F and a flow rate of 9000 gpm. This value was used in VTD 900501 [75] to determine a pressure differential across the strainer of 5.8 psi which was used for sump structural analysis. Subsequently, revision 2 of [22] allows a maximum head loss of 6.91 ft. under the same boundary conditions. This head loss value corresponds to a pressure differential of approximately 12.7 psi. Clearly, if testing shows the total head loss across the strainer to be greater than 3.15 ft. under the governing conditions, the existing analysis would no longer be a bounding and conservative load case without additional justification. As such, the qualification

of the strainer module is acceptable subject to the outcome of strainer head loss and chemical effects testing, which is intended to confirm the validity of the original head loss assumption of 3.15 ft at 190°F. The need for the licensee, based on strainer head loss and chemical effects testing, to either confirm its strainer module structural evaluation values, or revise its strainer module structural evaluation, is designated as **Open Item 5.1-1.**

5.1.2 High-Energy Line Break Evaluation

The staff reviewed design changes packages (references [73] and [5] and the Salem Updated Safety Evaluation Report [77] to assess pipe whip, steam jet impingement and missile hazards to the new strainer modules.

NRC Staff Audit

The effect of a high-energy line break (HELB) on the strainer modules was reviewed for the RHR injection lines, SI lines, and the Chemical and Volume Control (CVC) charging lines (stated by the licensee in [73] and [5] to be the only high-energy lines near the new strainers). The cold leg SI lines are 2-inch diameter (and subject to pipe whip and jet impingement review according to Salem UFSAR 3.6-1a and 3.6-1b, which require piping greater than 1-inch diameter to be reviewed). In accordance with the guidance of Reference [6] and the corresponding SE [3] (see Section 3.4.2.1 of the SE), the new strainers are greater than 17D from all high energy lines, much further than the required 10D ZOI. The staff finds the licensee's approach to be conservative and therefore acceptable.

The evaluation provided above adequately documented the potential effects on the sump strainer modules associated with jet impingement due to a HELB in the cold leg SI and charging SI piping. In addition, the staff requested a summary of evaluations concerning potential pipe whip and missile impact effects on the new sump strainer. The licensee responded with an evaluation demonstrating that the possibility for pipe whip associated with a high-energy line break was reviewed for potential effects on the new sump strainer assembly. Section 3.6.5.1.1 of the licensee's Updated Final Safety Analysis Report (UFSAR) states, "The three-foot thick wall, which extends from Elevation 81 ft to 130 ft, acts as a barrier between the containment liner and the sources of jet forces, pipe whip, and missiles associated with a failure of the RCS." Therefore, the staff concludes, since the new strainers are located entirely between the wall and the containment liner, that the strainers are protected from potential missiles.

Based on the above considerations, the staff concludes that the licensee has appropriately addressed possible HELBs in the vicinity of the new strainer modules and recirculation sumps.

5.2 Upstream Effects

The purpose of the upstream effects review is to ensure that the licensee has appropriately accounted for potential hold up volumes, choke points, and other physical obstructions that could prevent water from draining to the sump. Any water held up by restrictions would not be available in the sump pool to provide coverage and the required head of water above the strainer, and would result in a reduction of net positive suction head (NPSH) margin.

To evaluate upstream effects, the staff reviewed containment drawings, discussed the issue with licensee staff, and also reviewed several other references provided by the licensee. To verify the assumptions contained in these documents, and verify the available flow paths to the sump, several containment layout drawings were reviewed. A document containing information relating to a containment walkdown to specifically identify choke points or obstructions was reviewed. The walkdowns did not identify any unanalyzed holdup volumes [78, 79]. No single

centralized licensee description of the water and debris flowpaths was provided for staff review. The most descriptive information was presented in the debris generation calculation [7].

The minimum water level calculation reviewed by the staff during the on-site portion of the audit [80] makes the following corrections for holdups in the analysis: water holdup in the reactor pit/instrument tunnel, reactor coolant drain tank pit, and a number of other significantly smaller volumes [80, page 7], water holdup as condensed films on various ambient temperature surfaces, and water holdup as boiling spray water films on hot structures, water holdup on flat surfaces, and water required to fill the normally dry containment spray piping. These holdups appear to be properly accounted for in the calculation.

The minimum water level calculation also made appropriate conservative assumptions regarding initial conditions including: minimizing RWST level, pressurizer level, and accumulator volume; maximizing RWST, accumulator, and RCS temperatures to reduce the total volume of water in these systems.

The minimum water level calculation did not account for holdups in the lower refueling canal or the holdup due to spray droplets. They did account for holdup from initially dry spray headers and water films on vertical surfaces. However, the licensee, in response to NRC staff comments on these issues, has issued a revision to the water level calculation [38] that addresses these issues. The calculation now properly documents the issues that were raised, and the evaluation of minimum water level is acceptable to the staff.

The Debris Generation Calculation [7] provides a description of the flow from a postulated break and the spray system to the sump. The Walkdown Reports [78] and [79] provide a general description of the flooring and obstructions to flow that exist in the containment. Water is discharged from the spray headers located between 114 and 139 ft above the operating deck. The operating deck is at the 130 ft elevation. The spray headers are between the 244 ft and 269 ft elevations. The water will pass through various plant elevations before ultimately draining into the containment sump formed at elevation 78 ft-2 in. A review of the documentation provided to the staff shows that, at and above the operating floor elevation at the 130 ft elevation, the flooring is primarily concrete with some areas of grating. However, the areas around the steam generator cavities are open. Spray falling on the 130 ft elevation flows down to the next elevation through the areas around the steam generator, the stairwells, and the small grated areas on the operating floor. The concrete portions of the floor drain to floor drains or grated areas with no obstructions. There are no curbs to restrict flow. However, there are toe plates around the outer edges of the grating to prevent large items from falling to the lower level. These toe plates will not obstruct water flow through the gratings. Therefore, spray flow at the operating level will either pass through gratings, around the steam generator compartments, or down the stairways to the next lower level.

In the following two paragraphs, two different pit holdup scenarios are discussed. In the case of a break at or near the reactor nozzle, the instrument tunnel and reactor pit fill first, and then overflow into the recirculation sump, delaying sump fill. In the case of a break in the vicinity of the steam generator, the recirculation sump fills first, and then flows over a curb into the reactor pit. The first scenario is, therefore, more limiting.

At the operating floor elevation, the refueling canal is also open to the spray falling from above. As described above, the minimum water level calculation [80] assumed that the refueling canal drains could not become blocked and the spray water would be available to the sump by flowing through the refueling canal drains. By design, water can flow from the refueling cavity to the

containment sump through a six-inch drain located in the lower portion of the refueling canal. A flange that is installed in the refueling cavity drain line during refueling operations is administratively controlled by procedure. This flange is removed from the drain line as part of the transition from Mode 6 (refueling) to Mode 5 (cold shutdown). The licensee assumption that the refueling canal drain cannot be blocked is non-conservative because certain breaks have the potential to eject large debris to the upper containment where it could fall into the refueling canal and block the drain line. However, the licensee was able to demonstrate to the satisfaction of the staff that breaks with the potential to cause debris to enter the refueling canal would not also result in immediate filling of the reactor pit and instrument tunnel. A break close to the reactor nozzle that results in direct filling of the reactor pit/instrument tunnel does not create debris that can reach the refueling cavity. A revised minimum sump level calculation [38] was provided to the staff for review after the on-site portion of the audit was completed. The revised calculation demonstrated that the break that fills the reactor pit directly is more limiting from a sump level perspective than the break that results in potential blockage of the refueling cavity drain.

The reactor pit/instrument tunnel is the largest volume that can entrap water and prevent it from reaching the sump. The volume is 10,444 ft^3. The lower refueling canal volume is 6,562 ft^3 [38]. For the break that results in the potential for debris to block the refueling cavity drain line, water from the break would bypass the reactor pit and instrument tunnel and flow directly to the containment sump. Only a small amount of spray water would flow into the reactor pit before the recirculation sump overflows into it. However, because the reactor pit/instrument tunnel volume is so large, the water not entrapped in the reactor pit more than compensates for the spray water that fills the lower refueling canal and only begins filling the reactor pit. The revised calculation for the break in the vicinity of the steam generator shows that this break fills the sump faster than the reactor nozzle break. Therefore, the staff considers the reactor nozzle break that fills the reactor pit to be conservative and bounding with respect to sump level.

Drawings and walkdowns show that the structure at the 100-ft elevation is composed of grating and concrete. The debris generation calculation estimates that 62 percent of the spray flow drains directly from the 130-ft elevation to the 78-ft elevation via the stairwells and steam generator cavities. The remaining 38 percent falls to the 100-ft elevation. There are open areas around the steam generators, and grating at the containment liner on this elevation as well. Water falling on the 100-ft elevation will fall through gratings or drain to the grated areas and steam generator compartments to fall to the 78-ft elevation. Drawings and photographs show the steam generator compartments to be open at the 100-ft elevation. In general, the steam generator compartments have no obstructions that would prevent the flow of water from the above locations to the bottom of the compartments.

The reactor pit/instrument tunnel is a potential significant holdup for water in containment. This volume has a nine-inch curb that extends to the 81 ft- 9 in. elevation. Spray water drains through the open annulus around the reactor vessel down into the reactor pit and the in-core instrumentation tunnel. In addition, LOCA break flow can enter the reactor pit directly, depending on the location of the break. The calculation [80, 38] assumes that the reactor pit fills and that water in the pit is not available to the recirculation sump until the reactor pit level reaches its maximum volume at 81 ft-9 in. and then overflows into the sump.

The water flow-paths at the basement level elevation at 78 ft are relatively open, allowing free flow to the sump and strainers. The only significant choke points for flow are at the doors between the inner and outer annulus, and these openings are relatively large. Debris interceptors have been installed to prevent large and less transportable debris from reaching the

strainers. There are trenches covered with perforated plate in the inner and outer annulus areas that were designed to route water to the previous recirculation sump. These trenches could provide a path for water and debris to bypass the debris interceptors and have therefore had dividers installed to prevent the bypass.

Although the personnel access doors at the biological shield wall may hold up some pieces of large debris, the flow of water to the sump should not be significantly impeded. All but one of these doors that prevent access to the inner annulus have been modified to remove wire mesh near the floor and replace it with one inch thick horizontal bars on 12-inch centers to ensure that they will not become blocked and prevent flow from the inner annulus to the outer annulus where the strainer is located.

Based upon the information that has been reviewed and summarized above, the staff concluded that water drainage in the Salem containments would not be susceptible to being trapped in unanalyzed hold up locations.

5.3 Downstream Effects

5.3.1 Regulatory Basis

The Code of Federal Regulations, Title 10, Part 50, Section 50.46 requires, in part, that each boiling or pressurized light-water nuclear power reactor be provided with an ECCS that is designed so that its calculated cooling performance, following a postulated LOCA, limits peak cladding temperature and cladding oxidation (within specified parameters), maintains a coolable geometry, and provides long-term core cooling such that the calculated core temperature is maintained at an acceptably low value and decay heat is removed for the extended period of time required by the long-lived radioactivity remaining in the core.

In light of the safety issues identified in GSI-191, the NRC issued GL 2004-02 requesting that holders of operating licenses for pressurized-water reactors evaluate the ECCS, with respect to the recirculation functions, for compliance with 10 CFR 50.46. These evaluations were to include the potential for debris blockage at flow restrictions within the ECCS recirculation flow path downstream of the sump strainer. Examples of flow restrictions that should be evaluated are the fuel assembly inlet debris screens, the spacer grids within the fuel assemblies, and piping components with small flow passages (e. g., throttle valves, flow and restriction orifices, etc). Debris blockage at such flow restrictions could impede or prevent the recirculation of coolant to the reactor core leading to inadequate long-term core cooling. Sections 5.3.2 and 5.3.3 of this audit report describe and evaluate the licensee's downstream effects program and corrective actions.

At the request of industry, the NRC (in Reference [82]) clarified the requirements of 10 CFR 50.46 as they may apply to the resolution GSI-191 and GL 2004-02 with respect to (1) the requirements and acceptance criteria for long-term core cooling once the core is quenched and re-flooded and (2) for the mission time that should be used in evaluating debris ingestion effects on the reactor fuel. The requirements were clarified as follows:

1 With respect to the requirements and acceptance criteria for long-term core cooling once the core is quenched and re-flooded,

   "The 10 CFR 50.46 rule was constructed in two parts. The first part governs the performance of the emergency core cooling system (ECCS) during the initial phases of blow-down, quench and re-flood. During this period, the ECCS is injecting water from

the refueling water storage tank (RWST) into the reactor in an effort to ensure that fuel damage is minimized. The criteria used to conclude that fuel damage is minimized are the temperature criteria for the cladding and the oxidation and hydrogen generation values. The rule then establishes a criterion for long-term cooling during any recirculation phase (whether natural or forced recirculation). The acceptance criterion is simply that the calculated core temperature shall be maintained at an acceptably low value and decay heat shall be removed for the extended period of time required by the long-lived radioactivity remaining in the core.

The NRC staff has typically considered the criteria in paragraph (b)(5) to be satisfied when the fuel in the core is quenched, the switch from injection to recirculation phases is complete, and the recirculation flow is large enough to match the boil-off rate. The staff is concerned about the potential for loss of long-term cooling capability from chemical effects (boron precipitation) or physical effects (debris). For example, the staff's standard position is that a core flushing flow path should be established well before boron concentrations reach the precipitation limit (Ref. Information Notice 93-66). Similarly, analysis should demonstrate that no significant increase in calculated peak clad temperature (PCT) occurs by demonstrating that the bulk temperature at the core exit is maintained essentially constant at the temperature achieved at the initiation of recirculation or is continuing to decrease. The following paragraph provides further qualification of the NRC concerns with respect to increases in fuel temperature during the recirculation phase.

While the current staff position is conservative with respect to protection of the fuel, other options may be available that provide protection of the fuel, assure a coolable geometry, and could be used to demonstrate compliance with paragraph (b)(5). The staff notes that fuel qualification testing has been restricted to heating the fuel cladding to the regulatory limit and then quenching the material to examine the ductility and strength remaining. The staff is not aware of any testing done to examine the subsequent reheating of fuel to the 10 CFR 50.46 limit with a subsequent second quench (either slow or fast). Situations showing a localized moderate (on the order of 100 - 200 degrees C) PCT increase could be considered as acceptably low if properly justified. The staff would expect any such justifications to consider degradation of the cladding oxide layer, hydrogen embrittlement of the cladding, and accumulated diffusion of oxygen within the cladding microstructure. Duration of time at elevated temperature and peak temperature experienced by the clad should also be limited and justified. The staff would expect the justifications to be supported by test data, where possible. The submitted information would form the basis for any determination that the calculated core temperatures remain acceptably low as required by the rule."

2 With respect to the mission time that should be used in evaluating debris ingestion effects on the reactor fuel,

For GSI-191, the 30-day criterion was originally intended for evaluation of operability of equipment. For analysis of core cooling following debris ingestion into the reactor vessel, the staff believes that an adequate post-LOCA evaluation duration would be demonstrated when bulk and local temperatures are shown to be stable or continuously decreasing with the additional assurance that any debris entrained in the cooling water

5.3.2 Downstream Effects – Fuel and Vessel

The most challenging reactor core debris blockage situation is likely to occur following the largest postulated reactor system piping breaks. For smaller break sizes, the goal of plant operators would be to fill the reactor coolant system and establish closed loop cooling using the decay heat removal system (shutdown cooling mode). Recirculation of sump water might not be required for small break sizes. However, if recirculation were needed, the flow requirements would be less than for large breaks, carrying less debris to the reactor vessel. The amount of sump debris following a small break is expected to be less than that which would be generated following a large break. The audit evaluation, therefore, emphasized long-term cooling following large piping breaks.

Following a large-break LOCA at Salem, the residual heat removal, safety injection and high-pressure ECCS pumps are aligned to inject into the reactor cold legs. If the break were in a reactor coolant system hot leg, the ECCS water would be forced through the reactor core toward the break. Core flow, including a small amount of core bypass flow, during the long-term cooling period would be equal to the total ECCS flow. If all ECCS pumps were assumed to operate, ECCS flow into the reactor coolant system through the reactor vessel and into the core would be maximized. This maximum flow condition is evaluated since it provides the greatest potential for debris to transport to the reactor core and lodge within flow restrictions. Following a large cold leg break with injection into the reactor cold legs, the rate of core flow will be limited by the pressure needed to overcome the flow resistance generated by the exiting steam and by the static head of the water in the core. In the steady-state condition, the rate of ECCS water reaching the core will be limited to that needed to replenish water that is boiled away in the core. The excess flow will be spilled out of the break. Water injected into the intact cold legs will flow around the upper elevations of the vessel downcomer and reach the break without passing through the core. Therefore, the long-term cooling period following a large cold leg break represents a minimum core flow condition. Core blockage by debris under these conditions would add to the resistance that must be overcome for the ECCS water to reach the core and, therefore, could lead to diminished core cooling.

Also, for a cold-leg break, continued boiling in the core will act to concentrate the debris and chemicals in the core coolant channels. Chemical reaction of the debris with the coolant buffering agents and boric acid, driven by the core radiation field, could potentially change the chemical and physical properties of the mixture. Further, heat transfer could be affected by direct plate-out of debris on the fuel rods and by accumulation of material within the fuel element spacer grids.

To discuss these and other issues associated with downstream effects on reactor fuel, a meeting was held with the PWR Owners Group on April 12, 2006. In the meeting, the Owners Group presented plans to develop a topical report with anevaluation methodology for in-vessel debris issues. That report is WCAP-16793-NP [84].

At a meeting with the PWR Owners Group February 7, 2007, NRC staff identified the following phenomena that should be addressed to resolve GSI-191 issues related to the reactor core [83]:

1. The methodology should account for differences in PWR reactor coolant system and ECCS designs. For example,

    - Combustion Engineering plants with smaller recirculation flows may produce extended core boiling long after hot leg recirculation begins.

- The extended boiling period may impact concentration of debris in a core, plate-out, etc. Use of pressurizer spray nozzles for hot-leg recirculation should be evaluated for the potential of clogging with debris.

- Upper plenum injection plants without cold leg recirculation flow may have no means of flushing the core following a large hot leg LOCA and may need special consideration.

2. Hot spots may be produced from debris trapped by swelled and ruptured cladding. For example:

   - Debris may collect in the restricted channels caused by clad swelling, and at the rough edges at rupture locations.

   - FLECHT tests have shown that swelled and ruptured cladding may not detrimentally affect the cladding temperature profile.

   - The FLECHT tests did not include post-LOCA debris.

3. Long-term core boiling effects on debris and chemical concentrations in the core should be accounted for. For example:

   - The evaluations should be similar to post-LOCA boric acid precipitation evaluations. They should account for the change in water volume available to mix with constituents concentrated by the core from debris accumulation.

   - Partial blockage of the core creates alternate circulation patterns within the reactor vessel and will affect the concentration analysis.

   - Will the solubility limits be exceeded for any of the material dissolved in the coolant that is being concentrated by boiling in the core?

4. Debris and chemicals that might be trapped behind spacer grids could potentially affect heat transfer from the fuel rods and should be evaluated. For example:

   - Analyses show that a partially filled spacer grid produces only a moderate cladding temperature increase even if only axial conduction down the cladding is considered.

   - Similar analyses show that a completely filled spacer grid with only axial conduction will result in unacceptable temperatures.

   - A physical basis for determining to what extent the spacer grids can trap debris, and the ability for the debris to block heat transfer needs to be provided.

   - The evaluation needs to include the chemical and physical processes that may occur in the core during the long-term cooling period.

5. Consideration should be included for plating-out of debris and chemicals or both on the fuel rods during long-term boiling. For example:

- Long-term boiling in the core following a large-break LOCA may last for several weeks for some designs depending on the ECCS flow and core inlet temperature.

- The concentration of materials in the core, and the potential for plate out on the fuel rods (boiler scale) from this material should be determined.

- When the composition and thickness of the boiler scale have been determined, the effect on fuel rod heat transfer should be evaluated.

6. The licensees need to address whether high concentrations of debris and chemicals in the core from long-term boiling can affect the natural circulation elevation head which causes coolant to enter the core. For example:

   - For a large cold leg break, the density difference between the core and the downcomer determines the hydrostatic driving head, and consequently the flow rate into the core.

   - As boiling continues, a high concentration of debris and chemicals in the core may increase the core density and reduce the flow into the core.

7. If hot spots are found to occur, the licensee should address cladding embrittlement. Applicable experimental data for the calculated condition and type of cladding should be presented to demonstrate that a coolable geometry is maintained.

The licensee stated that, for the evaluation of downstream effects in the reactor vessel and fuel, it will rely on the ongoing program by the PWR Owners Group. The licensee stated that it is part of the PWR Owners Group, which is investigating the above issues. The PWR Owners Group has developed WCAP-16406-P, "Evaluation of Downstream Effects in Support of GSI-191," Revision 1 [4] and WCAP-16793-NP [84], "Evaluation of Long-Term Cooling Considering Particulate, Fibrous and Chemical Debris in the Recirculating Fluid," Revision 0 [84]. The WCAPs describe how particulate debris with a density that is heavier than water will settle in the reactor vessel lower plenum and not be passed into the core for a sufficiently low flow velocity. The WCAPs also describe how fibrous debris with a density approximately the same as that of water would be carried along with the recirculated sump water, but would be filtered by the sump strainers and by screens at the inlet to the fuel bundles. WCAP-16406-P was submitted to the staff for review as a topical report in 2006, and WCAP-16793-NP [84] was submitted for review in June 2007. The staff issued a final SE on WCAP-16406 in December 2007. The draft SE for WCAP-16793 has been issued but is subject to revision before a final SE is issued.

Because the subject of in-vessel downstream effects is covered in much greater detail in WCAP-16793-NP [84] than it is in WCAP-16406-P, the staff's SE of WCAP-16406-P did not reach any conclusions regarding the validity of the in-vessel debris issue presented in that document. Rather, it referred to the yet-to-be-finalized SE for WCAP-16793-NP. NRC approval of a topical report is not required for a licensee to reference that report, though licensees planning to reference it should be aware (through licensee interaction with the PWR Owners Group) of any associated issues the staff may have as its review of a given topical report proceeds.

NRC Staff Audit

The licensee continues to evaluate the post-LOCA consequences of debris ingestion into the reactor coolant system and its effect on long-term core cooling. The licensee has stated that it will use the results from generic evaluations currently being conducted by the PWR Owners Group. Although downstream evaluations were in a draft form during the audit, the licensee had not made any final conclusions as to whether the reactor core could be blocked by debris following a LOCA, or whether the calculated core temperature will be maintained at an acceptably low value and decay heat will be removed for the extended period of time required by the long-lived radioactivity remaining in the core.

The licensee had not yet completed its evaluation of debris intrusion into the reactor vessel and long-term cooling of the reactor core. The licensee provided a draft evaluation [85] that concluded that there was not enough fibrous material to block fuel passages and impede cooling to the core. The evaluation was based neither on WCAP-16793-NP nor WCAP-16406-P, Revision 1. The licensee stated that it would revise its evaluation based upon ongoing screen bypass test results and WCAP-16793-NP. The need for the licensee to complete its in-vessel downstream effects evaluation, including evaluation of both debris introduction into the reactor vessel and long-term cooling of the reactor core, is designated as **Open Item 5.3-1**.

5.3.3 Downstream Effects - Components and Systems

After the core has been re-flooded following a large break in the reactor coolant system, long-term cooling will be accomplished by the residual heat removal pumps. These pumps initially take suction from the RWST containing borated water. When that source of water becomes depleted, the suction source of the residual heat removal pumps will be switched to the containment ECCS sump to circulate water through the reactor. At the initiation of recirculation, the containment will contain all the water spilled from the reactor system and the water added from the RWST. The core cooling mode by which water is circulated from the containment ECCS sump through the RHR heat exchanger, into the reactor pressure vessel, out the break and back to the sump may be required for an extended period. During this long-term cooling period, any debris that is washed into the containment pool and passes through the sump strainers will have a high probability of being introduced into the ECCS and the reactor vessel.

The NEI Guidance Report (GR) [6] and associated Safety Evaluation (SE) [3] provide licensees guidance on evaluating the flow-paths downstream of the ECCS sump screens for blockage from entrained debris. The GR and SE state that the downstream evaluation should:

1. Determine the flow clearance through the sump screen to define the maximum size of particulate debris to be used in downstream component evaluations.

2. Evaluate wear and abrasion of surfaces in the emergency core cooling and containment spray systems based on anticipated flow rates and the grittiness or abrasiveness of the plant-specific ingested debris to which the surfaces will be subjected.

3. Review the effects of debris on rotating equipment (e. g., pumps), piping, valves, and heat exchangers located downstream of the sump. In particular, examine the potential for blockage in flow-balancing throttle valves installed in the ECCS.

4. Define the long-term and short-term system operating lineups, conditions of operation, and mission times. For rotating equipment, assess the condition and operability of the component to perform its safety function during, and following, its required mission times.

5. Evaluate the pumps for changes in rotor dynamics due to wear and address the potential for vibration-induced rotor and shaft cracking as described in NUREG/CP-0152 Vol. 5, TIA 2003-04.

6. Evaluate system piping, containment spray nozzles and instrumentation tubing for blockage by debris in low-flow/low fluid velocity areas. Include such components as tubing connections for differential pressure transmitters, elbow taps, flow-venturies and reactor vessel/RCS leg connections for reactor vessel level measurements. Give consideration to any potential impact that fiber matting may have on instrumentation necessary for continued long-term operation.

7. Evaluate valve and heat exchanger wetted surfaces for susceptibility to wear, surface abrasion, and plugging that may alter the system flow distribution.

8. Evaluate the effects of heat exchanger degradation resulting from plugging, blocking, plating-out of slurry materials on overall system hydraulic and heat removal capability.

9. Perform an overall system evaluation that integrates limiting conditions and the potential for reduced pump/system capacity that may result from internal bypass leakage or external leakage.

10. Evaluate the consequences of wear-induced leakage past seals and rings in plant areas outside containment. The evaluation should address accident scenario design and licensing bases, including environmental and dose consequences.

Salem used PWR Owners Group WCAP-16406-P, Evaluation of Downstream Sump Debris Effects in Support of GSI-191, Revision 1 [4] and the USNRC draft Safety Evaluation of TR-WCAP-16406-P [98] in its assessment of ECCS components. The staff reviewed the licensee's draft evaluation of the debris effects on downstream components which was approximately 60 percent complete. NRC staff noted that the wear evaluations of the charging pumps had not been performed at the time of the audit. Also, an integrated system evaluation that considered the combined effects of all wear evaluations had not been performed.

The licensee had performed an evaluation of the flow paths downstream of the containment sump to determine the potential for blockage due to debris passing through the sump strainer. The scope of the evaluation included components in the recirculation flow path(s) including throttle valves, flow orifices, spray nozzles, pumps, heat exchangers, and valves. The licensee evaluated system and component flow clearances using the following logic:

1. Determine the maximum characteristic dimension of the debris (clearance through the sump strainer),

2. Identify the recirculation flow path(s),

3. Identify the components in the recirculation flow path(s),

4. Review station documents (drawings, Operation Maintenance(O&M) manuals, etc) to determine flow path clearance dimensions,

5. Review station drawings and perform physical walkdowns to confirm location and connection orientation of the instrument connections,

6. Determine blockage potential by comparing the component flow clearance with the flow clearance through the sump strainer, and

7. Identify components requiring a detailed evaluation, including investigation of the effects of debris on the capability of the components to perform their intended safety function(s).

Based on the outcome of the flow clearance evaluations described above, the licensee performed a more rigorous review [4, 84] of the components listed below and concluded that no ECCS components are susceptible to debris-induced blockage or excessive wear.

1. CVC Charging pumps

2. Safety Injection pumps

3. RHR pumps

4. RHR pump mechanical seal heat exchanger

5. Various ECCS manual globe valves

6. Safety Injection Cold Leg Throttle Valves

NRC Staff Audit

The staff evaluation of the licensee's more rigorous review utilized the recirculation flow path(s) shown on piping and instrument diagram drawings, plant procedures and UFSAR descriptions. Based upon a review of all licensee provided documentation, the staff concluded that all system components and flow paths were appropriately listed and evaluated.

In accordance with Section 7.3 of the SE [98], the staff reviewed the licensee stated design mission times and system lineups required to support decay heat removal. The mission time for the RHR System was defined as 30 days. The selected time is in accordance with 10 CFR 50.46(b)(5), which provides that "after any calculated successful initial operation of the ECCS, the calculated core temperature shall be maintained at an acceptably low value and decay heat shall be removed for the extended period of time required by the long-lived radioactivity remaining in the core."

The licensee defined the mission time for the Charging System and the Safety Injection System as two days. In this regard, the staff reviewed a Salem engineering evaluation [33] as well as the Salem UFSAR, plant operating procedures and system operating guidance. The staff concluded that the engineering evaluation had not completely addressed all operating line-ups, nor had it reflected the descriptions of the Charging System and the Safety Injection System contained in the Salem UFSAR. During the onsite portion of the audit the licensee stated that it would incorporate all operating line-ups and descriptions into a revised engineering evaluation of mission times. Subsequent to the onsite portion of the audit, and in response to a staff

inquiry, the licensee revised the ECCS mission time evaluation [86]. The revised evaluation incorporated emergency operating procedure lineups and ECCS design bases calculations in accordance with the staff safety evaluation [87]. The staff found the revised evaluation to be acceptable.

The licensee performed an evaluation of wear and abrasion of surfaces in the emergency core cooling and containment spray systems. For non-pump components, the licensee estimated component wear based on pump run-out flow. This is conservative and in accordance with [4] and [98].

The draft licensee evaluations of the ECCS pumps were generally in accordance with [4] and [98]. For pump evaluations, the licensee considered shut-off head for the two-body evaluations and run-out flow for the free-flowing wear evaluations. Salem assumed no settling of particulate or hard particles in its evaluations. Wear evaluations reflected the full range of possible flow conditions. This is conservative as it maximizes the potential for wear. However, during the review of the licensee analyses, neither NRC staff nor the licensee staff was able to validate the critical inputs and assumptions used in the analysis. The need for the licensee to validate the critical inputs and assumptions used in the ECCS pump analysis is designated as **Open Item 5.3-2**.

The licensee used manufacturers' pump curves, versus degraded, actual or modified pump curves in its evaluation of ECCS pump degradation. The pump curves used in the evaluations of pump degradation should consider actual operating characteristics as derived from operating experience or through In-service Testing (IST). The need for the licensee to use pump curves which consider actual operating characteristics in evaluation of ECCS pump degradation is included in **Open Item 5.3-2**.

Stop/Start operation of the ECCS pumps had not yet been evaluated at the time of the audit. The need for the licensee to evaluate Stop/Start operation of the ECCS pumps is included in **Open Item 5.3-2**.

Evaluation of the changes in pump rotor dynamics, wear-induced vibrations and impact on pump internal loads to determine the potential for rotor or shaft cracking had not been completed at the time of the audit. The need for the licensee to evaluate changes in pump rotor dynamics and the long-term effects of vibration caused by wear is included in **Open Item 5.3-2**.

Evaluations of system piping, containment spray nozzles, and instrumentation tubing for blockage due to bypass debris had not been completed at the time of the audit. The need for the licensee to complete evaluations of potential blockage of system piping, containment spray nozzles and instrumentation tubing by bypass debris is included in **Open Item 5.3-2**.

An evaluation of the extent and effect of air entrainment downstream of the sump screens (apart from vortexing) had not been performed because not all component evaluations had been completed. The need for the licensee to evaluate the extent and effect of air entrainment downstream of the sump screens (apart from vortexing) is included in **Open Item 5.3-2**.

An overall system evaluation, integrating limiting conditions and including the potential for reduced pump/system capacity resulting from internal bypass leakage or through external leakage was not available for review at the time of the audit because all other component evaluations were not yet completed. The need for the licensee to conduct an overall system evaluation, integrating limiting conditions and including the potential for reduced pump/system

capacity resulting from internal bypass leakage or through external leakage is noted in **Open Item 5.3-2.**

Evaluations of environmental and dose consequences due to leakage past ECCS pump seals and rings into areas outside containment were not available for review because pump component evaluations had not been completed at the time of the onsite portion of the audit. The need for the licensee to evaluate the environmental and dose consequences outside containment due to leakage past ECCS pump seals and is included in **Open Item 5.3-2**.

The licensee's characterization of the properties and affect of strainer bypass debris in the ECCS post-LOCA fluid (abrasiveness, solids content, and debris characterization) was in progress at the time of the onsite portion of the audit. For the licensee's initial assessment, 100 percent particulate pass-through was assumed. The licensee had performed fiber bypass testing to quantify the debris bypass more accurately. At the time of the onsite portion of the audit, the licensee had not yet decided if the results were to be used in the downstream component evaluations. The need for the licensee to resolve the characteristics of the strainer bypass debris and factor that information into ECCS pump component analysis is included in **Open Item 5.3-2**.

The licensee's evaluation included a list identifying the materials of construction for the wetted parts (e. g., wear rings, pump internals, bearings, throttle valve plug, and valve seat rings) of all downstream components. The staff reviewed this list against the materials of construction shown on design drawings and vendor technical manuals. Operating and maintenance manuals were correctly updated to reflect the modifications made to components.

5.4 Chemical Effects

The NRC staff reviewed the licensee's chemical effects evaluation, comparing it with the guidance provided in Section 7.4 of the NRC staff's safety evaluation [3]. In support of the chemical effects portion of the audit, the NRC staff reviewed [88-93]. Prior to the audit, the NRC staff and licensee had participated in several conference calls to discuss the Salem plant-specific chemical effects testing. In addition, results from initial Salem plant specific chemical effects testing were presented to the NRC staff and the NRC's Advisory Committee on Reactor Safeguards (ACRS) at public meetings [94].

Materials in the Salem containment building that are analyzed to become debris during a large break LOCA include RMI, fiberglass, Kaowool®, Min-K®, containment coatings, and latent debris. Sodium hydroxide is added to the containment spray system to control the pH in the sump pool on the containment floor following a LOCA.

At the time of the audit, Salem had performed some chemical effects testing and additional testing was planned. The licensee demonstrated a questioning attitude about long-term chemical effects by performing an initial chemical effects test for 13 days in the Control Components, Incorporated (CCI) multi-functional test (MFT) loop in Switzerland. This test provided some valuable information concerning long-term head loss trends due to chemical effects.

The Salem plant-specific chemical precipitate source term was calculated by Sargent & Lundy using the chemical model spreadsheet contained in Westinghouse WCAP-16530-NP, "Evaluation of Post-Accident Chemical Effects in Containment Sump Fluids to Support GSI-191" [95]. The source-term calculations were performed using the WCAP-16530-P chemical effects base model without refinements. According to the licensee, a conservative

amount of precipitate was calculated by: (1) using maximum sump temperature profiles and (2) using the higher end of possible plant pH values. The staff finds this to be acceptable based on the licensee's use of conservative sump conditions and its use of an approved method. Higher sump temperatures are conservative for Salem chemical evaluations because higher temperatures promote dissolution of materials, thereby increasing the chemical precipitate source term.

Although the WCAP-16530-NP chemical model spreadsheet predicts three specific precipitates (i.e., sodium aluminum silicate, aluminum oxyhydroxide and calcium phosphate) the Salem testing approach at CCI was to determine the predicted amounts of aluminum, calcium and silicon that are dissolved based on the WCAP model and then inject those amounts of dissolved elements into the MFT loop. This test approach assumes that if the target quantities of Al, Si, and Ca are present in solution at the appropriate pH range, the precipitates that form in the MFT loop will be representative of precipitates that would form in a post-LOCA plant environment. The chemicals are directly added to the MFT loop in the following sequence: boric acid, sodium aluminate, calcium chloride, and sodium silicate. After establishing the appropriate boron concentration in the loop, the other chemicals are injected as a concentrated solution (e.g., 36 percent sodium aluminate), but are then diluted by the much larger MFT loop volume.

The NRC staff questions about the Salem chemical effects test method focused on two areas:

- The type, amount, and timing of precipitate formation with the CCI chemical injection technique

- The properties of the precipitates formed in the test loop, in particular precipitate settlement and precipitate filterability.

Given the complexity of the chemical system and that precipitate flocculation may be very sensitive to parameters such as local aluminum concentrations, pH, and temperature, the NRC staff questioned the repeatability of the chemical injection process. For example, testing at Argonne National Laboratory [96] showed that varying the mixing concentration and stirring rate during the addition of sodium-aluminate and sodium-silicate significantly affected the behavior of the precipitate. In one test, with a dissolved aluminum concentration equal to 115 ppm, chemicals were added slowly while stirring and fine particles were formed that appeared to quickly dissolve. In another test, with the same total dissolved aluminum addition, but with a high mixing concentration and no stirring, large particles formed that settled rapidly. Therefore, the staff questioned whether the CCI MFT chemical injection technique was sufficiently controlled and the precipitation process sufficiently understood such that the amount of precipitate and the settlement properties of precipitates formed in the MFT loop were predictable. The staff noted that CCI tests showed the Salem plant-specific precipitate appeared to settle much more rapidly than precipitate that formed in Integrated Chemical Effect Test (ICET) Test 1, [97] or precipitate that formed from aluminum corroding in buffered, borated water in the WCAP-16530-NP tests. Therefore, the staff questioned whether other precipitate properties may be different as well. In response, licensee personnel indicated that additional chemical-effects testing was planned at CCI. The NRC staff plans to observe these tests. Since the Salem chemical effects evaluation is in progress, and additional testing is planned to resolve various issues, resolution of chemical effects at Salem is designated as **Open Item 5.4-1**.

There is a general open item across the PWR reactor fleet related to the potential for coatings to contribute to chemical effects by changes to the paint due to the pool environment (i.e., the

potential for some of the coatings chips to turn into a product that causes high head loss). For Salem, this is designated as **Open Item 5.4-2**. The nuclear industry recently submitted a coatings test report that evaluates the effects of a representative post-LOCA environment on various plant coatings. The staff will determine whether the generic industry-supplied information demonstrates that the potential interaction between coatings and chemical effects is insignificant. The licensee will need to address this issue once the staff has notified the licensee regarding the adequacy of the nuclear industry test report, either by declaring the issue resolved or by providing further technical information.

6.0 CONCLUSIONS

An overall conclusion as to the adequacy of the licensee's Salem Unit 1 and Unit 2 corrective actions in response to GL 2004-02 will be contained in a future letter to PSEG from the NRC Office of Nuclear Reactor Regulation. This letter will consider licensee responses to GL 2004-02 requests for additional information (RAIs), and future licensee GL 2004-02 supplemental responses reporting completion of GL 2004-02 corrective actions at Salem Unit 1 and Unit 2 and closure of the open items in this report.

APPENDIX I

Open Items

Plant-Specific Open Items

These open items are plant-specific in nature. Responses to these open items will have a scope beyond the information guidance of the "Content Guide for Generic Letter 2004-02 Supplemental Responses" (ADAMS Accession Number ML071060091). The licensee should summarize in its GL 2004-02 supplemental responses how these open items have been addressed.

Open Item 3.2-1: Use of an 8 Pipe Diameter (8D) Zone of Influence (ZOI) for Steel Jacketed Nukon

The licensee used an 8D ZOI for steel jacketed Nukon fibrous insulation based on a Westinghouse (WCAP) test report which the licensee did not possess and, therefore, the report was not available for audit team review. The licensee needs to justify use of an 8D ZOI for this material.

Open Item 3.5-1: Structural Capability of Crane-Wall Bioshield Door

The licensee needs to demonstrate the capability of the unmodified mesh gate located near the ECCS strainers to withstand the potential post-LOCA structural loadings (e.g., jet impingement, subcompartment depressurization, and containment pool flows when obstructed with debris and provide a summary of results to the NRC staff.

Open Item 3.6-1: Final Chemical and Non-chemical Integrated Head Loss Testing Not Performed to support NPSH margin calculations for ECCS pumps.

The licensee needs to perform the final chemical and non-chemical head loss testing and then calculate strainer head loss. Net-positive suction head (NPSH) margin for the emergency core cooling systems (ECCS) pumps can then be calculated. The licensee should summarize for the NRC staff how the eight aspects of this issue discussed in Section 3.6.6 of this audit report have been addressed

Open item 3.6-2: Preparation of Fibrous Debris for Head Loss Tests Not Prototypical

The preparation of fibrous debris for the head loss tests was not prototypical and, as a result, tended to preclude the formation of a fibrous debris "thin bed" in the test strainers. The licensee's conclusion that a thin bed would not form on the sump strainer may therefore be in error. The licensee should evaluate this issue for its impact on plant testing and summarize the results for NRC staff.

Open Item 5.1-1: Strainer Structural evaluation

Based on strainer head loss and chemical effects testing, confirm that the head-loss values used in the strainer module structural evaluation are conservative or revise the strainer module structural evaluation to reflect the maximum expected pressure drop across the strainer. Provide a summary of the results to NRC staff for review.

Open Item 5.3-1: Downstream Effects for Fuel and Vessel

The licensee analysis of downstream effects for the fuel and vessel was in draft and will be re-evaluated in accordance with WCAP 16793 "Evaluation of Long-term Cooling Considering Particulate, Fibrous and Chemical Debris in the Recirculating Fluid," Revision 0 [84]. The licensee needs to complete the analysis for downstream effects for the fuel and vessel and provide a summary of the results to NRC staff.

Open Item 5.3-2: Downstream Effects for Components and Systems Incomplete

The downstream effects analysis for components and systems was in progress but incomplete. Examples of specific items which were incomplete were evaluation of the charging pump start/stop operations and charging system evaluation, validation of safety injection pump and charging pump mission times, and general validation of critical inputs to the downstream effects analyses. The details of the open items are listed in Section 5.3.3 of this report. The licensee needs to complete the analysis for downstream effects for components and systems addressing the issues noted in Section 5.3.3 and provide a summary of the results to NRC staff.

Open Item 5.4-1: Chemical Effects Resolution

Because plant-specific chemical effects evaluations were in progress at the time of the onsite audit, chemical effects resolution in general was designated as an open item. The licensee needs to complete plant-specific chemical effects evaluations and integrated head loss tests and provide a summary of the results to NRC staff.

General Open Item

The following open item is general in nature. The "Content Guide for Generic Letter 2004-02 Supplemental Responses" (ADAMS Accession Number ML071060091) provides guidance for the development of response to such open items.

Open Item 5.4-2: Chemical Effects Resolution

There is a general open item across the PWR reactor fleet related to the potential for coatings to contribute to chemical effects by changes to the paint due to the pool environment (i.e., the potential for some of the coatings chips to turn into a product that causes high head loss). For Salem, this is designated as **Open Item 5.4-2**. The nuclear industry recently submitted a coatings test report that evaluates the effects of a representative post-LOCA environment on various plant coatings. The staff will determine whether the generic industry supplied information demonstrates that the potential interaction between coatings and chemical effects is insignificant. The licensee will need to address this issue once the staff has notified the

licensee regarding the adequacy of the nuclear industry test report, either by declaring the issue resolved or by providing further technical information. Should further information be needed, it should be provided to the staff along with descriptions of how the plant-specific open items have been addressed.

APPENDIX II
References

1. NRC Generic Letter 2004-02, "Potential Impact of Debris Blockage on Emergency Recirculation During Design Basis Accidents at Pressurized-Water Reactors," dated September 13, 2004.

2. Bulletin 2003-01, “Potential Impact of Debris Blockage on Emergency Sump Recirculation at Pressurized Water Reactors”, dated June 9, 2003.

3. Safety Evaluation by the Office of Nuclear Reactor Regulation Related to NRC Generic Letter 2004-02, Nuclear Energy Institute Guidance Report, NEI 04-07, “Pressurized Water Pressurized Water Reactor Sump Performance Evaluation Methodology,” NRC/NRR Staff Report, Revision 0, December 6, 2004 (“Safety Evaluation” or “SE”).

4. WCAP-16406-P, “Evaluation of Downstream Effects in Support of GSI-191,” Westinghouse Electric Company LLC, Revision 1, August 2007.

5. PSEG Design Change Package No. 80080788, “Salem 2 Containment Sump Upgrades,” Rev. 3, October 28, 2006.

6. NEI PWR Sump Performance Task Force Report NEI 04-07, “Pressurized Water Pressurized Water Reactor Sump Performance Evaluation Methodology,” May 28, 2004 (“Guidance Report” or “GR”).

7. Calculation No. S-C-RHR-MDC-2039, “Debris Generation Due to LOCA within Containment for Resolution of GSI-191,” Revision 01R2, July 19, 2007.

8. ANSI/ANS Standard 58.2, “Design Basis for Protection of Light Water Nuclear Power Plants Against the Effects of Postulated Pipe Rupture,” 1988.

9. WCAP -16710-P, “Jet Impingement Testing to Determine the Zone of influence (ZOI) of Min-K and NUKON® Insulation.

10. George H. Workman, “Study to Assess the Strength of the NUKON Cylindrical Panel Support Systems Associated with the Steam Generators at the Salem Unit 1 Nuclear Power Plant When Subjected to a Postulated Blast Loading,” Technical Letter Report from Applied Mechanics Incorporated to Performance Contracting, Inc., September 30, 2007.

11. PSEG Transmittals of Design Information: Transmittal Number 80080788-004, dated June 14, 2007.

12. K. F. McNamee, “Evaluation of Jet Impingement and High Temperature Soak Tests of Lead Blankets for Use Inside Containment of Westinghouse Pressurized Water Reactors,” WCAP-16727-NP, Revision 0, September 2007.

13. PSEG Nuclear, “Post-LOCA Debris Transport to Containment Sump for Resolution of GSI-191,” Revision 1, S-C-RHR-MDC-2056, September 27, 2007.

14. U.S. Nuclear Regulatory Commission, “San Onofre Nuclear Generating Station Unit 2 and Unit 3 GSI-191 Generic Letter 2004-02 Corrective Actions Audit Report,” May 2, 2007.

15 Boiling Water Reactor Owners’ Group, “Utility Resolution Guidance for ECCS Strainer Blockage,” Volume 3, October 1998.

16. Thermal Ceramics, “Flexible Min-K Product Information.”

17. U.S. Nuclear Regulatory Commission, “Knowledge Base for the Effect of Debris on Pressurized Water Reactor Emergency Core Cooling Sump Performance,” NUREG/CR-6808, February 2003.

18. “Calculation for Latent Debris (Dust and Lint) Determination for Salem Unit 2 Containment for Resolution of GSI-191,” Calc. S-2-CAN-MDC-2076, Rev. 0IR2 (April 2007).

19. “Walkdown Report for Evaluating Debris Sources Inside Salem Unit 1 Containment for Resolution of GSI-191,” PSEG Nuclear, VTD 901212 (September 2007).

20. “Walkdown Report for Evaluating Debris Sources Inside Salem Unit 2 Containment for Resolution of GSI-191,” PSEG Nuclear, VTD 901213 (September 2007).

21. Not Used.

22. “Salem Generating Station Containment Sump Strainers”, Specification No. S-C-CAN-MDS-0445 (May 2006).

23. “Containment Walkdown,” PSE&G Nuclear L.L.C. Salem/Operations Procedure S1-OP-PT.CAN-0001(Q), Rev. 15 (April 2007).

24. “Containment Walkdown,” PSE&G Nuclear L.L.C. Salem/Operations Procedure S2-OP-PT.CAN-0001(Q), Rev. 17 (October 2006).

25 Not Used.

26. U.S. NRC, Regulatory Guide (RG) 1.82, Revision 3, "Water Sources for Long-Term Recirculation Cooling Following a Loss-of-Coolant Accident," dated November 2003.

27. NUREG/CR-6369, D.V. Rao, C. Shaffer, B. Carpenter, D. Cremer, J. Brideau, G. Hecker, M. Padmanabhan, and P. Stacey, “Drywell Debris Transport Study: Experimental Work,” NUREG/CR-6369, Volume 2, SEA97-3501-A:15, September 1999.

28. U.S. NRC, "GSI-191: Separate-Effects Characterization of Debris Transport in Water," NUREG/CR-6772, LA-UR-01-6882," August 2002.

29. U.S. NRC, "Transport and Screen Blockage Characteristics of Reflective Metallic Insulation Materials," NUREG/CR-3616, January 1984.

30. Fauske and Associates, Inc., Report No. FAI/07-04, “Test Report for Containment Sumps Project,” Revision 1, PSEG Nuclear LLC (Salem Station), April 27, 2007 (PSEG Calc. No. 901144).

31. PSEG Nuclear, “Debris Generation due to LOCA within Containment for Resolution of GSI-191,” Revision 0, July 24, 2007.

32. PSEG Nuclear “Answers to NRC Questions from July 30, 2007, Call with Salem,” September 5, 2007.

33. “Required Mission Times for Salem ECCS Pumps During Recirculation Phase,” Calc. S-C-SJ-MEE-1978, Rev. 0 (March 2006).

34. M. Sporri, “Containment Sump Strainer Replacement: Salem MFT Chemical Test Specification,” CCI Report No. Q.003.84772, Rev. 6, December 1, 2006.

35. U. Blumer, “Preliminary Head Loss Calculation for GSI-191 Compliance,” CCI Report No. 3 SA-096.048, Rev. 1, March 8, 2007.

36. M. Sporri, “Chemical Effect Test Filter Performance Report,” CCI Report No. 680/41352, Rev. 1, September 5, 2007.

37. Engineering Evaluation S-C-CAN-MEE-1896, Revision 1, September 20, 2007, Input to Procurement Specification S-C-CAN-MDS-0445.

38. Calculation S-C-CAN-MDC-2061, Revision 1, October 15, 2007, Minimum Containment Flood Level.

39. U. Blumer, Proof of Absence of Vortices Above Strainers,” CCI Report No. 680/41 272, Rev. 2, February 21, 2007.

40. M. Sporri, “Large Size Filter Performance Test,” CCI Report No. 680/41128, Rev. 2, November 11, 2005.

41. M. Spori, “Small Test Loop Filter Performance Report,” I Report No. 680/41132, Rev. 1, September 19, 2006.

42. Draft Guidance for Review of Final Licensee Responses to Generic Letter 2004-02, “Potential Impact of Debris Blockage on Emergency Recirculation During Design Basis Accidents at Pressurized Water Reactors,” Dated September 27, 2007, ADAMS Ascension No. ML072600425.

43 Not Used.

44. U. Blumer, “Head Loss Calculation for Present Design Basis (50% Blocked Strainers),” CI Report No. 3 SA-096.047, Rev. 1, March 19, 2007.

45. “Amendment to Facility Operating License,” Safety Evaluation by the Office of Nuclear Reactor Regulation, Amendment No. 285, License No. DPE-70, Docket No. 50-311 (November 12, 2007).

46. "Assurance of Sufficient Net Positive Suction Head for Emergency Core Cooling and Containment Heat Removal Pumps," NRC Generic Letter 97-04, (October 7, 1997).

47. "Audit Plan - Adequacy of Licensee Resolutions of NRC Generic Letter 04-02," (December 5, 2006).

48. Salem Generating Station -UFSAR, Section 6.3, “Emergency Core Cooling System,” Rev. 0 (May 2003).

49. Not Used.

50. “Salem Nuclear Generating Station, Unit Nos. 1 and 2, Issuance of Amendments Re: Revision to Licensing Basis – Net Positive Suction Head Methodology for Emergency Core Cooling System Pumps (TAC Nos. MD 6353 and MD6354),” Safety Evaluation by the Office of Nuclear Reactor Regulation, Amendments No. 285 and No. 268, License No. DPE-70 and No DPE-75, Docket No. 50-272 and No. 50-311 (November 15, 2007).

51. “Containment Volume Versus Flood Level Analysis,” S-C-A900-MDC-0082 Rev. 4 (December 2006).

52. Not Used.

53. “PEGISYS Version 3.0,” Westinghouse Corporation Letter No. FSE/SS-M-7308 (June 1992).

54. Mathur, K., “The PEGISYS 3”, PSE&G, E-Mail Communication to T. Ginsberg (October 2, 2007).

55. “Flow of Fluids through Valves, Fittings, and Pipe,” Crane Technical Paper No. 410, 1970.

56. Smith, S. (USNRC), Personal Communication (October 2007).

57. “American National Standard for Centrifugal Pumps for Design and Application,” ANSI/HI-2000, Hydraulic Institute (1999).

58. WCAP-16568-P, “Jet Impingement Testing to Determine the Zone of Influence (ZOI) for DBA-Qualified/Acceptable Coatings.”

59. Cavallo, J., “Plant Support Engineering: Adhesion Testing of Nuclear Coating Service Level 1 Coatings,” EPRI 1014883, Palo Alto, California: EPRI, 2007.

60. ASTM International. “Standard Guide for Establishing Procedures to Monitor the Performance of Service Level I Coatings in an Operating Nuclear Power Plant.” ASTM D5163–05a. West Conshohocken, Pennsylvania: ASTM International. 2005.

61. NRC. Regulatory Guide 1.54, “Service Level I, II, and III Protective Coatings Applied to Nuclear Power Plants.” Rev. 1. Washington DC: NRC. 2000.

62. NUREG 1801, Vol. 2, Generic Aging Lessons Learned Report.

63. PSEG Technical Standard NC.DE-TS.ZZ-6006(Q), "Primary Containment Coatings."

64. Foreign Material Exclusion (FME) and Closure Control, SH.MD-GP.ZZ-0006(Q), Rev 2.

65. Containment Walkdown, S1.OP-PT.CAN-0001(Q) – Rev 15.

66. Containment Walkdown, S2.OP-PT.CAN-0001(Q) – Rev 17.

67. Emergency Core Cooling ECCS Subsystems-Containment Sump Modes 5-6, S1.OP-ST.SJ-0011(Q), Rev. 5.

68. Emergency Core Cooling ECCS Subsystems-Containment Sump Modes 5-6, S2.OP-ST.SJ-0011(Q), Rev. 5.

69. ECCS-Containment Inspection for Mode 4, S1OP-ST.SJ-0010(Q), Rev. 5.

70. ECCS-Containment Inspection for Mode 4, S2OP-ST.SJ-0010(Q), Rev. 5.

71. Salem Unit 1 GSI-191 Insulation Debris Reduction, Engineering Change No. 80090886, Rev. 1.

72. Salem Unit 2 GSI-191 Insulation Debris Reduction, Engineering Change No. 80089573, Rev. 1.

73. PSEG Design Change Package No. 80080787, “Salem 1 Containment Sump Upgrades,” Rev. 1, April 13, 2007.

74. Not Used.

75. VTD 900501, *Structural Analysis of Strainer and Support Structure.*

76. 2004 American Society of Mechanical Engineers (ASME) Boiler and Pressure Vessel (B&PV) Code, Section III, Subsection NF and Appendix A-8000.

77. Salem Generating Station Updated Final Safety Analysis Report

78. Walkdown Report for Evaluating Debris Sources Inside Salem Unit 2 Containment for Resolution of GSI-191, 2005-05960, Rev. 0.

79. Walkdown Report for Evaluating Debris Sources Inside Salem Unit 1 Containment for Resolution of GSI-191, 2004-03483, Rev. 0.

80. Minimum Containment Flood Level Calculation, S-C-CAN-MDC-2061, Rev 01R1, 10/31/06.

81. Not Used.

82. NRC Letter T. O. Martin, NRC, to J. A. Gresham, “Nuclear Regulatory Commission Response to Westinghouse Letter LTR-NRC-06-46 Dated July 14, 2006, Regarding PWR Containment Sump Downstream Effects,” August 16, 2006.

83. Meeting Summary 2/7-8/07, Summary of February 7 and 8, 2007, Public Meeting with the NEI, PWR OG, Licensees, and Sump Strainer Vendors to Discuss the Resolution of GSI-191, Joe Golla, March 21, 2007.

84. WCAP-16793-NP, PWR Owners Group letter, Submittal of WCAP-16793-NP, Revision 0, "Evaluation of Long-Term Cooling Considering Particulate, Fibrous and Chemical Debris in the Recirculating Fluid," (PA-SEE-0312), dated June 7, 2007.

85. DRAFT GSI Downstream Effects Fuel Evaluation for Salem Units 1 and 2 Accounting for As-tested Debris Pass-through Fibrous Debris from Replacement Sump Testing.

86. Design Analysis S-C-SJ-Mee-1978, "Required Mission Times for the Salem ECCS Pumps During the Recirculation Phase," Revision 1.

87. Design Analysis No. S-C-RHR-MDC-2089, Long term Wear Effects Evaluation in Support of Resolution of GSI-191, DRAFT-partial.

88. GSI-191 Chemical Effects Evaluation, Salem Generating Station Units 1 and 2 Document S-C-RHR-MEE-1925, Rev. 0, dated February 2006.

89. Chemical Laboratory Bench Top Test, Salem NPP, Unit 1 and 2, CCI Document Q.003.84.794 dated September 2007.

90. Containment Sump Strainer Replacement: Salem MFT Chemical Test Specification, CCI Document Q.003.84772, dated March 2007.

91. Containment Sump Strainer Replacement: Salem MFT Chemical and Bypass Test Specification, CCI Document Q.003.84.805, dated October, 2006.

92. Salem Transmittal of Design Information Number 80080788-002 from Kiran Mathur to Ira Owens, Aluminum Paint for Containment Sump Project, dated July 13, 2006.

93. Chemical Effect Test Filter Performance Report for Salem NPP Unit 1 and 2, CCI Document 680/41352, dated September 2007.

94. "Salem GSI-191 Resolution," May 15, 2007, Presentation to the Thermal-Hydraulic Phenomena Subcommittee of the Advisory Committee for Reactor Safeguards, Rockville, MD.

95. WCAP-16530-NP, "Evaluation of Post-Accident Chemical Effects in Containment Sump Fluids to Support GSI-191," February, 2006, NRC ADAMS Accession No. ML060890509.

96. "GSI-191 Chemical Effects Follow-On Testing," Presentation by NRC Staff, GSI-191 Public Meeting on October 24, 2007.

97. NUREG/CR-6914, "Integrated Chemical Effects Test Project: Consolidated Data Report," dated December 2006 (ADAMS Accession No. ML071800338).

98. USNRC DRAFT Safety Evaluation, TR-WCAP-16406-P, Evaluation of Downstream Sump Debris Effects in Support of GSI-191, Revision 1, September 6, 2007.