Westinghouse Non-Proprietary Class 3

WCAP-15791-NP-A
Revision 2

June 2008

Risk-Informed Evaluation of Extensions to Containment Isolation Valve Completion Times

Westinghouse

WCAP-15791-NP-A
Revision 2

Risk-Informed Evaluation of Extensions to Containment Isolation Valve Completion Times

G. R. André
J. D. Andrachek
Westinghouse Electric Company

W. H. Ketchum
S. G. Wideman
Wolf Creek Nuclear Operating Company

June 2008

Approved: M.A. Lucci*, Acting Manager
Risk Applications and Methods - I

This work was performed under PWROG Shop Order MUHP-3010/PA-LSC-0029/PA-LSC-0135

*Electronically approved records are authenticated in the electronic document management system.

Westinghouse Electric Company LLC
P.O. Box 355
Pittsburgh, PA 15230-0355

© 2008 Westinghouse Electric Company LLC
All Rights Reserved

UNITED STATES
NUCLEAR REGULATORY COMMISSION
WASHINGTON, D.C. 20555-0001

February 13, 2008

Mr. Gordon Bischoff, Manager
Owners Group Program Management Office
Westinghouse Electric Company
P.O. Box 355
Pittsburgh, PA 15230-0355

SUBJECT: FINAL SAFETY EVALUATION (SE) FOR WESTINGHOUSE OWNERS GROUP (WOG) TOPICAL REPORT (TR) WCAP-15791-P, REVISION 2, "RISK-INFORMED EVALUATION OF EXTENSIONS TO CONTAINMENT ISOLATION VALVE COMPLETION TIMES" (TAC NO. MD3834)

Dear Mr. Bischoff:

By letter dated May 25, 2007, the Pressurized Water Reactor Owners Group (PWROG), submitted TR WCAP-15791-P, "Risk-Informed Evaluation of Extensions to Containment Isolation Valve Completion Times," Revision 2, to the U.S. Nuclear Regulatory Commission (NRC) for review and approval. By letter dated December 21, 2007, the PWROG commented on the draft SE for WCAP-15791-P, Revision 2, dated November 1, 2007, and the NRC staff's resolutions to the comments are addressed in Attachment 2 of the final SE.

TR WCAP-15791-P, Revision 2 incorporates in TR WCAP-15791-P, Revision 1, the resolution of the issue on how to address separate condition entry of containment isolation valves in the Technical Specification Task Force (TSTF), TSTF-446. This issue was resolved through an amendment issued to Wolf Creek Generating Station on April 26, 2006. However, the amendment for Wolf Creek Generating Station was issued after approval of Revision 1 of WCAP-15791-P dated March 10, 2006, therefore, the SE did not reflect those changes.

The NRC staff has found that WCAP-15791-P, Revision 2, is acceptable for referencing in licensing applications for Westinghouse pressurized water reactors to the extent specified and under the limitations delineated in the TR and in the enclosed final SE. The final SE defines the basis for our acceptance of the TR.

Our acceptance applies only to material provided in the subject TR. We do not intend to repeat our review of the acceptable material described in the TR. When the TR appears as a reference in license applications, our review will ensure that the material presented applies to the specific plant involved. License amendment requests that deviate from this TR will be subject to a plant-specific review in accordance with applicable review standards.

In accordance with the guidance provided on the NRC website, we request that the PWROG publishes the accepted proprietary and non-proprietary versions of this TR within three months of receipt of this letter. The accepted versions shall incorporate this letter and the enclosed final SE after the title page. Also, they must contain historical review information, including NRC requests for additional information and your responses. The accepted version shall include an "-A" (designating accepted) following the TR identification symbol.

RECEIVED
FEB 18 2008
PWROG
PROJECT OFFICE

G. Bischoff -2-

If future changes to the NRC's regulatory requirements affect the acceptability of this TR, the PWROG and/or licensees referencing it will be expected to revise the TR appropriately, or justify its continued applicability for subsequent referencing.

Sincerely,

Ho K. Nieh, Deputy Director
Division of Policy and Rulemaking
Office of Nuclear Reactor Regulation

Project No. 694

Enclosure: Final SE

cc w/encl:
Mr. James A. Gresham, Manager
Regulatory Compliance and Plant Licensing
Westinghouse Electric Company
P.O. Box 355
Pittsburgh, PA 15230-0355

UNITED STATES
NUCLEAR REGULATORY COMMISSION
WASHINGTON, D.C. 20555-0001

SAFETY EVALUATION BY THE

OFFICE OF NUCLEAR REACTOR REGULATION

TOPICAL REPORT WCAP-15791-P, REVISION 2, "RISK-INFORMED EVALUATION OF EXTENSIONS TO CONTAINMENT ISOLATION VALVE COMPLETION TIMES"

WESTINGHOUSE OWNERS GROUP

PROJECT NO. 694

1.0 INTRODUCTION

Licensees of nuclear power plants have Technical Specifications (TSs) in accordance with Title 10 of the *Code of Federal Regulations* (10 CFR), Section 50.36, "Technical specifications," that govern the operation of the plants. These TSs have limiting conditions for operation (LCOs) that state the primary containment isolation valves (CIVs) must be operable and the applicable reactor modes of operation in which CIVs are required to be operable. If any of the CIVs are inoperable, the TSs specify the required actions to address the inoperability and the completion times (CTs) for such actions. The U.S. Nuclear Regulatory Commission's (NRC) improved standard TSs (ISTS) for Westinghouse plants are in NUREG-1431, "Standard Technical Specifications Westinghouse Plants," Revision 3, dated June 2004 (NUREG-1431).

By letter dated June 6, 2002, (Agencywide Documents Access and Management System (ADAMS) Accession No. ML021720004), as supplemented by letters dated February 13 and May 6, 2004, and March 10, 2005 (ADAMS Accession Numbers ML052010500, ML051940476, and ML050740020, respectively), the Westinghouse Owners Group (WOG) submitted proprietary and non-proprietary versions of topical report (TR) WCAP-15791-P, "Risk-Informed Evaluation of Extensions to Containment Isolation Valve Completion Times," for NRC staff review. The WOG letters dated February 13, 2004, and March 10, 2005, provided responses to the NRC staff's request for additional information (RAI) and other clarifications. The supplemental letter dated May 6, 2004, provided the proprietary and non-proprietary versions of TR WCAP-15791, Revision 1, that incorporated changes delineated in the WOG RAI responses. The TR provides technical justification for extending CIV CTs in ISTS LCO 3.6.3, "Containment Isolation Valves," and would be referenced in plant-specific license amendment requests to extend CIV CTs. The WOG also provided comments on the NRC staff's draft safety evaluation (SE) in its letter dated October 19, 2005 (ADAMS Accession No. ML052940248).

On March 10, 2006 (ADAMS Accession No. ML060330330), the NRC issued its final SE on TR WCAP-15791-P, Revision 1, and stated that the TR is acceptable for referencing in licensing applications regarding extended CIV CTs. The SE contains conditions on licensees adopting this TR and identifies additional information needed to be submitted in plant-specific applications adopting the TR in Sections 3.5 and 3.6, respectively, of that SE. The NRC also

ENCLOSURE

concluded (1) that the TR provides guidance, and generic and plant-specific analyses, to assist licensees in evaluating changes to CIV CTs and (2) this guidance is complementary to NRC staff guidance provided in Regulatory Guides (RGs) 1.174, "An Approach for Using Probabilistic Risk Assessment in Risk-Informed Decisions on Plant-Specific Changes to the Licensing Basis," and 1.177, "An Approach for Plant-Specific, Risk-Informed Decisionmaking: Technical Specifications," and in Chapter 19, Section 19.2 of the NRC Standard Review Plan (SRP), NUREG-0800, June 2007. As such, the NRC stated that TR WCAP-15791-P, Revision 1, provides an acceptable basis to evaluate the proposed CIV CTs, when used in conjunction with the RGs. The NRC final SE also had an attached table that addressed the disposition of the WOG's comments in the WOG letter dated October 19, 2005, on the NRC draft SE on the TR.

On November 21, 2006, the WOG, now the Pressurized Water Reactor Owners Group (PWROG), requested a meeting with the NRC staff to address the PWROG's remaining comments on the final SE to topical report WCAP-15791. The main point made in the meeting was that the issue on how to address separate condition entry of containment isolation valves in the Technical Specification Task Force (TSTF), TSTF-446, Revision 1, "Risk-Informed Evaluation of Extensions to Containment Isolation Valve Completion Times (WCAP-15791)," had been resolved through the amendment issued to Wolf Creek Generating Station on April 26, 2006. Because the amendment for Wolf Creek Generating Station was issued after the final SE for WCAP-15791 dated March 10, 2006, the final SE to WCAP-15791 did not reflect those changes. Therefore, the PWROG suggested incorporating the changes into WCAP-15791 as well as a few other changes the PWROG identified for the final SE to WCAP-15791. The NRC staff agreed to revise the final SE to WCAP-15791, based on an additional submittal by the PWROG that revised WCAP-15791 to include the resolution of TSTF-446, Revision 1.

In support of TR WCAP-15791, TSTF submitted to the NRC TSTF-446, Revision 1, "Risk-Informed Evaluation of Extensions to Containment Isolation Valve Completion Times (WCAP-15791)," by letter dated January 31, 2005 (ADAMS Accession No. ML050460293). By letter dated January 11, 2007 (ADAMS Accession No. ML070110620), as updated by letter dated June 12, 2007 (ADAMS Accession No. ML071630408), TSTF submitted a Revision 2 to TSTF-446 to the NRC. Although TSTF-446 is not addressed in the SE, it is referred to in Sections 3.1 and 3.3.3 of the SE because the PWROG referenced TSTF-446 in its response to an NRC RAI. The acceptability of the technical specifications in the proposed TSTF-446 will be addressed in a separate evaluation.

By letter dated December 15, 2006 (ADAMS Accession No. ML063530292), the PWROG submitted hand-written markup revisions to TR WCAP-15791-P, Revision 1, as well as comments on the NRC final SE issued on March 10, 2006. By letter dated January 16, 2007 (ADAMS Accession No. ML070260213), the PWROG submitted non-proprietary hand-written markup revisions to TR WCAP-15791, Revision 1. Per NRC request, the PWROG agreed to resubmit TR WCAP-15791-P, Revision 1, with the hand-written comments integrated in a printed version of the topical report, as TR WCAP-15791-P Revision 2. By letter dated May 25, 2007 (ADAMS Accession No. ML071550225), the PWROG submitted proprietary and non-proprietary versions of TR WCAP-15791-P, Revision 2, to the NRC staff for review and approval. It is this version of TR WCAP-15791 that is addressed in this SE.

The TR provides a risk-informed justification for extending the CIV CTs from four hours to 168 hours (i.e., seven days) for Westinghouse pressurized water reactors. The approach taken

in TR WCAP-15791 in grouping plant CIVs and determining the CTs for the CIVs is addressed in Appendix A to this SE.

For CIVs that did not demonstrate acceptable results for 168 hours, shorter CTs were evaluated in TR WCAP-15791. The WOG analysis includes a generic-bounding risk assessment of the impact of adopting the proposed CTs. A deterministic approach was used to determine the minimum-containment hole size that would result in a large release from the containment atmosphere. Penetration flow paths connected to the containment atmosphere smaller than the minimum hole size are screened out of the total list of penetration flow paths (i.e., no further evaluation is made), and are assigned the maximum CT of seven days. Penetrations larger than the minimum-containment hole size were evaluated using a probabilistic evaluation to verify what CT (i.e., a seven-day or shorter CT) is justified by the evaluation.

The WOG stated that the CIV CT extension methodology in TR WCAP-15791 is consistent with the guidance of RG 1.174, Revision 1, dated November 2002, and RG 1.177, dated August 1998. However, to be within these guidelines, the seven-day CT had to be reduced for some CIVs. Thus, plant-specific applications of the proposed generic results will lead to some CIV CTs that are less than seven days.

The WOG stated in WCAP-15791 that the proposed CT extensions will provide flexibility by increasing the time to perform on-line CIV testing, maintenance, or repair. The proposed CTs were selected to provide sufficient time for plant personnel to both address CIV inoperability and to perform preventive maintenance activities on the CIVs during power operation.

2.0 REGULATORY EVALUATION

CIVs ensure that adequate primary containment boundaries are maintained during and after accidents by minimizing potential flow paths to the environment and ensure that the primary containment function assumed in the plant-specific safety analysis is maintained. The associated CIV LCO in the plant TSs ensures that the CIVs will perform their design safety functions to minimize the loss of reactor coolant inventory and establish an adequate containment boundary during an accident.

NUREG-1431 states that CIVs form part of the containment pressure boundary and provides a means for fluid penetrations not serving accident consequence limiting systems to be provided with two isolation barriers that are closed on a containment isolation signal. These isolation devices are either passive or active (i.e., automatic). Manual valves, deactivated automatic valves secured in their closed position (including check valves with flow through the valve secured), blind flanges, and closed systems are considered passive devices. Two barriers (one may be a closed system) in a series are provided for each penetration so that no single credible failure or malfunction of an active component can result in a loss of isolation or leakage that exceeds limits assumed in the safety analysis. CIVs help ensure that the containment atmosphere will be isolated from the environment in the event of a release of fission product radioactivity to the containment atmosphere as a result of a design-basis accident (DBA). The DBAs that result in a release of radioactive material within containment are a loss-of-coolant accident (LOCA) and a rod ejection accident. The operability requirements for CIVs help ensure that containment is isolated within the time limits assumed in the safety analysis.

2.1 Applicable Regulations

The applicable regulations governing CIVs are the following:

The regulation at 10 CFR 50.36, "Technical specifications," requires that all operating licenses for nuclear reactors must include TSs for the subject plant. The LCOs, along with the required CTs, are specified for each system in the TSs, which includes the CIVs. With the LCOs, there are surveillance requirements specified to check that the system LCO is being met, and conditions, required actions, and CTs specified for when the LCO is not being met and how long the plant can take to restore the LCO or shut down. Although CTs are not specifically stated in 10 CFR 50.36, LCOs are addressed and 10 CFR 50.36(c)(2) states that when an LCO is not met, the licensee shall "shut down the reactor or follow any remedial action permitted by the technical specifications until the condition can be met." The action conditions and required actions in the TSs are the remedial actions and the CTs are allowed time for the specified remedial actions before the licensee shall shut down the reactor. If the basis for extending the CTs is acceptable, then the requirements of 10 CFR 50.36 are met. The basis for the CTs specified in the TSs can be deterministic and/or risk-informed.

The regulation at 10 CFR 50.65, "Requirements for monitoring the effectiveness of maintenance at nuclear power plants," as it relates to the proposed CIV CT configuration, requires the assessment and management of the increase in risk that may result from the proposed maintenance activity.

General Design Criterion (GDC)-35, "Emergency core cooling," of Appendix A to 10 CFR Part 50, requires suitable redundancy in components and features, and suitable interconnections, leak detection, isolation, and containment capabilities to assure that the system safety function can be accomplished assuming a single failure.

GDC-54, "Piping systems penetrating containment," requires that those piping systems penetrating primary containment shall be provided with leak detection, isolation, containment capabilities having redundancy, reliability, and performance capabilities that reflect the importance to safety of isolating these piping systems.

GDC-55, "Reactor coolant pressure boundary penetrating containment," requires that each line that is part of the reactor coolant pressure boundary and that penetrates primary containment shall be provided with CIVs.

GDC-56, "Primary containment isolation," requires that each line that connects directly to the containment atmosphere and penetrates primary reactor containment shall be provided with CIVs.

GDC-57, "Closed system isolation valves," requires that each line that penetrates primary reactor containment and is neither part of the reactor coolant pressure boundary nor connected directly to the containment atmosphere shall have at least one CIV that shall be either automatic, or locked closed, or capable of remote manual operation.

The proposed CIV CTs do not affect the design or function of these valves; therefore, compliance with the above GDC is not changed by the proposed CTs. Also, if the basis for

extending the CTs is acceptable, then 10 CFR 50.36 will be met. The basis in WCAP-15791 for extending the CIV CTs is risk-informed and the criteria for accepting changes to plants utilizing risk information are discussed in the next section.

2.2 Applicable Regulatory Criteria/Guidelines

General guidance for evaluating the technical basis of proposed risk-informed changes is provided in Chapter 19, Section 19.2 of the NRC SRP, June 2007. More specific guidance related to risk-informed TS changes is provided in SRP Section 16.1, "Risk-Informed Decisionmaking: Technical Specifications," Revision 1, March 2007, which includes CT changes as part of risk-informed decisionmaking. Chapter 19, Section 19.2 of the SRP states that a risk-informed application should be evaluated to ensure that the proposed changes meet the following key principles:

- The proposed change meets the current regulations, unless it explicitly relates to a requested exemption or rule change.
- The proposed change is consistent with the defense-in-depth philosophy.
- The proposed change maintains sufficient safety margins.
- When proposed changes increase risk (i.e., core damage frequency (CDF) or large early release frequency (LERF)), the increase(s) should be small and consistent with the intent of the Commission's Safety Goal Policy Statement.
- The impact of the proposed change should be monitored using performance measurement strategies.

RG 1.174 and RG 1.177 provide specific guidance and acceptance guidelines for assessing the nature and impact of licensing-basis changes, including proposed permanent TS changes in CTs by considering engineering issues and applying risk insights. RG 1.177 identifies an acceptable risk-informed approach, including additional guidance specifically geared toward the assessment of proposed TS CT changes. Specifically, RG 1.177 identifies a three-tiered approach for the evaluation of the risk associated with a proposed TS CT change as identified below:

- Tier 1 is an evaluation of the plant-specific risk associated with the proposed TS change, as shown by the change in core damage frequency (ΔCDF) and incremental conditional core damage probability (ICCDP), change in large early release frequency (ΔLERF), and incremental conditional large early release probability (ICLERP). This tier also addresses the technical adequacy of the licensee's plant-specific probabilistic risk assessment (PRA) for the subject application.
- Tier 2 identifies and evaluates, with respect to defense-in-depth, any potential risk-significant plant equipment outage configurations associated with the proposed change. The licensee should provide reasonable assurance that the risk-significant plant equipment outage configurations will not occur when equipment associated with the proposed TS change is out of service.

- Tier 3 provides for the establishment of an overall configuration risk management program (CRMP) and confirmation that its insights are incorporated into the decisionmaking process before taking equipment out of service prior to or during the CT. Compared with Tier 2, Tier 3 provides additional coverage to ensure risk-significant plant equipment outage configurations are identified in a timely manner and that the risk impact of out-of-service equipment during planned and unplanned maintenance activities is appropriately evaluated prior to performing any maintenance activity over extended periods of plant operation. Tier 3 guidance can be satisfied by the Maintenance Rule (i.e., 10 CFR 50.65(a)(4)), where that program provides an adequate quality basis which requires a licensee to assess and manage the increase in risk that may result from activities such as surveillance, post-maintenance testing, and corrective and preventive maintenance.

If the approach in WCAP-15791 for the evaluation of the risk associated with the proposed CIV CTs addresses Tier 1, Tier 2, and Tier 3 requirements, as described above, and meets the specific guidance and acceptance guidelines in RGs 1.174 and 1.177, for assessing the nature and impact of licensing-basis changes, then the proposed CIV CTs meet 10 CFR 50.36 and are, therefore, acceptable. For WCAP-15791, Tier 1 and Tier 2 are addressed in the TR. Tier 3 is not addressed in the TR, and, therefore, must be addressed in the plant-specific applications. Sections 4.0 and 5.0 of this SE address the conditions and additional information, including Tier 3, that should be submitted by licensees in their plant-specific applications.

3.0 TECHNICAL EVALUATION

3.1 NUREG-1431 TSs Affected

Based on WCAP-15791, the following requirements in ISTS LCO 3.6.3 are affected:

- Condition A - One or more penetration flow paths with one CIV inoperable (only applicable to penetration flow paths with two [or more] CIVs). Required Action A1: Isolate the affected penetration flow path by the use of at least one closed and deactivated automatic valve, closed manual valve, blind flange, or check valve with flow through the valve secured. In WCAP-15791, this condition was split into two conditions, Condition A for CIV pressure boundary intact and Condition B for CIV pressure boundary not intact. This creates TS conditions to address maintenance activities that impact the CIV and the penetration pressure boundary: one when the pressure boundary is intact and one when it is not intact.

- Condition B - One or more penetration flow paths with two [or more] CIVs inoperable, where the required action is to isolate the affected flow path by a closed and deactivated automatic valve, closed manual valve, or blind flange in a CT of one hour, is not being changed, but this condition is renumbered.

- Condition C - One or more penetration flow paths with one CIV inoperable (only applicable to penetration flow paths with only one CIV and a closed system). Required Action C1: Isolate the affected penetration flow path by use of at least one closed and deactivated automatic valve, closed manual valve, or blind flange. In WCAP-15791, Condition C is deleted to eliminate this condition.

- In WCAP-15791, an additional ISTS LCO 3.6.3 Condition D is proposed to be added stating that for two or more penetration flow paths with one CIV inoperable [for reasons other than Condition[s] E [and F]] the CT is four hours. This new condition limits the CTs of inoperable CIVs in more than one penetration flow path as allowed by Note 2 to the Technical Specifications 3.6.3 Actions table. Condition D was addressed in the WOG's response to the NRC staff's RAI 6, in its February 13, 2004, letter in that the WOG stated that the technical specifications in TSTF-446 would be revised to be consistent with the single inoperable CIV assumed in WCAP-15791. The technical specification revision is the proposed additional ISTS LCO 3.6.3 Condition in TSTF-446, Revision 1. The licensee for Wolf Creek Generating Station also submitted this condition in its plant-specific amendment request dated July 23, 2004, to adopt WCAP-15791, Revision 1. This is discussed in Section 3.3.3 of this SE.

- Also, other ISTS LCO 3.6.3 conditions are renumbered to account for deleting Condition C and adding new Conditions B and D, which are discussed above. For example, the existing Condition B is renumbered Condition C.

WCAP-15791 provides justification for extending the CT from four hours to up to 168 hours (seven days). For isolation valves that cannot demonstrate acceptable results for 168 hours, shorter times are considered in the TR, as shown for LCO 3.6.3 below:

- Condition A - One or more penetration flow paths with one CIV inoperable, and CIV pressure boundary intact.

  Required Action A.1: Isolate the affected penetration flow path by the use of at least one closed and deactivated automatic valve, closed manual valve, blind flange, or check the valve with flow through the valve secured.

  Change the CT from four hours to one of the following seven categories, which are listed in Tables D-1 and D-2 of Appendix D to WCAP-15791, based on generic or plant specific calculated CT results of CIVs:

  1. 4 hours for Category 1 CIVs
  2. 8 hours for Category 2 CIVs
  3. 12 hours for Category 3 CIVs
  4. 24 hours for Category 4 CIVs
  5. 48 hours for Category 5 CIVs
  6. 72 hours for Category 6 CIVs
  7. 168 hours for Category 7 CIVs

- Condition B - One or more penetration flow paths with one CIV inoperable and CIV pressure boundary not intact.

  Required Action B.1: Isolate the affected penetration flow path by use of at least one closed and deactivated automatic valve, closed manual valve, blind flange, or check valve with flow through the valve secured.

-8-

Change the CT from four hours to one of the following seven categories, which are listed in Tables D-1 and D-2 of Appendix D to WCAP-15791, based on generic or plant specific calculated CT results of CIVs:

1. 4 hours for Category 8 CIVs
2. 8 hours for Category 9 CIVs
3. 12 hours for Category 10 CIVs
4. 24 hours for Category 11 CIVs
5. 48 hours for Category 12 CIVs
6. 72 hours for Category 13 CIVs
7. 168 hours for Category 14 CIVs

As shown above, NUREG-1431, LCO 3.6.3 conditions and notes, which distinguish between penetration flow paths that contain two or more CIVs and penetration flow paths that contain one CIV and a closed system, are eliminated. LCO 3.6.3 conditions are added to address maintenance activities that impact the CIV and penetration pressure boundary: one condition when the pressure boundary is intact and one condition when it is not intact. The difference between Conditions A and B above is whether (1) the CIV is not removed for maintenance and the penetration pressure boundary is intact (Condition A) or (2) the CIV is removed for maintenance and the penetration pressure boundary is not intact (Condition B). This is addressed in Section 3.2 of this SE.

Of the conditions identified in LCO 3.6.3, the risk impact of two CIVs inoperable in one or more penetration flow paths was not evaluated in WCAP-15791. The CT for this configuration is generally limited by the ISTS LCO 3.6.3 Condition B to a CT of one hour. This remains unchanged by WCAP-15791 in that the TR does not propose to change the condition, or the CT for this condition. Systems used for accident mitigation that contain CIVs that also function as containment pressure boundaries were evaluated only with regard to the valve impact on loss of containment isolation, and CT limitations with respect to accident mitigation system function remain unchanged. In response to the NRC staff's RAI, the WOG evaluated the potential impact of the CT extensions on the availability of other mitigative functions and the corresponding impact on risk. The WOG results show that this impact is very small.

3.2 Detailed Description of the Proposed Changes

The emergency core cooling system (ECCS) is designed to meet the requirements of 10 CFR 50.46, and GDC-35 of Appendix A to 10 CFR Part 50. Suitable redundancy in components and features, and suitable interconnections, leak detection, isolation, and containment capabilities are provided to assure that the system safety function can be accomplished assuming a single failure. The unavailability of one ECCS train, in addition to one of the injection lines affected by the assumed break, will not compromise the ability of the ECCS to mitigate a LOCA. Thus, with the inoperability of a single ECCS isolation valve to open, the remaining ECCS train is sufficient to perform the design function of ECCS for mitigating a design-basis LOCA. The WOG also confirmed by an RAI response that the ECCS does not contain valves classified as CIVs that would close on a containment isolation signal that would compromise the safety function of the mitigation system. Therefore, the safety function of the ECCS will not be affected by the proposed changes of CIV CTs with respect to a CIV failing to open.

The TR assessment of the risk impact for the proposed changes to extend CIV CTs for up to seven days during Modes 1, 2, 3, and 4 follows the guidance of RGs 1.177 and 1.174, and includes the evaluation of the ΔCDF, ΔLERF, ICCDP, and ICLERP for valves in maintenance where the pressure boundary is or is not maintained during the proposed CT in accordance with the guidance of RGs 1.174 and 1.177. The TR evaluation also includes the interfacing system LOCA (ISLOCA) for valves connected to the reactor coolant system (RCS). The TR evaluated valves that have a dual function of containment isolation and accident consequence mitigation. The WOG considered the risk impact of CIVs installed in systems with non-seismically qualified piping. Although TS LCO 3.6.3 Note 2 allows separate condition entry for each penetration flow path, proposed Condition D addresses an inoperable CIV in more than one penetration flow path and limits the CT, for all but one inoperable CIV, to four hours. This is to say that the proposed Condition D will limit the number of CIVs in an extended CT to no more than one at any given time.

The TR uses a methodology to assess plant risk that involves the grouping of CIVs and the associated penetrations in generic classes. This is addressed in Appendix A of this SE. Each class was then further divided into subgroups of generic configurations. Although the WOG did perform a plant-specific CT risk evaluation for one plant in Chapter 10 of the TR, where Wolf Creek Generating Station (Wolf Creek) is the lead plant, it primarily selected risk parameters identified as bounding. The risk parameters selected represent a composite plant and are considered bounding values based on data from WOG-member utilities. The risk impact of each configuration was determined by applying the proposed seven-day CT and using the bounding-risk parameters for each LCO. However, for penetration flow paths that do not result in a large early release (i.e., diameters less than or equal to two inches) the screening criteria presented in WCAP-15791 provide a default CT of seven days in lieu of a risk analysis for these CIVs.

The evaluations determined the risk impact on LERF, and ICLERP with one CIV inoperable within a penetration for the seven-day CT. The resulting value represents the risk increase while in a seven-day CIV CT. These estimates were then compared to the acceptance guidelines given in RGs 1.174 and 1.177. For CIV evaluations that met the acceptance guidelines for LERF and ICLERP, a seven-day CT was proposed. For CIVs where the seven-day CT resulted in LERF and/or ICLERP estimates greater than the acceptance guidelines, alternate shorter CTs were evaluated and proposed. Based on the TR evaluation results, not all CIV CTs could be extended to the full seven-day CT; however, a basis for calculating a shorter acceptable CIV CT was presented in Chapter 8 of the TR. Plant-specific applications of the generic analysis in Chapter 8 of WCAP-15791 must show that these TR assumptions are applicable to their facility. The WOG provided a demonstration of the methodology for the Wolf Creek in Chapter 9.

The TR stated that because CIVs are used to maintain containment integrity, any change in their availability will directly impact releases from containment following a core damage event. Furthermore, the TR stated that the impact on CDF, as expressed by ΔCDF and ICCDP, is not relevant, since containment isolation is not directly related to the prevention or mitigation of core damage. In the RAIs, the NRC staff requested the following:

1. An evaluation of the impact on ΔCDF/ICCDP for the TR containment isolation configurations and systems associated with an accident mitigation function

(e.g., engineered safety feature actuation system, sample lines, letdown, containment cooling, reactor coolant system inventory control, or containment sprays).

2. Further evaluation of an open system (i.e., an open system inside containment is directly connected to the containment atmosphere and an open system outside containment is directly connected to the outside atmosphere) on CDF during maintenance activities and the ICCDP associated with CIVs that also have a safety function in addition to primary containment isolation that is in the closed position during maintenance.

In response to item 1 above, the WOG stated that systems that are used for accident mitigation that also contain valves that perform a containment isolation function may impact CDF. The WOG provided examples of systems that perform a dual function where the CIV was inoperable and would impact the operability of another system. The impact on operability is a function of the CT of the impacted system. In other words, the CT of the impacted system and the CT of the CIV would be controlled by the shorter of the impacted CTs. The WOG stated that, in all cases, the limiting CT was equal to or less than the CT for the associated mitigation system with a core damage or containment release mitigation function.

With an increase in the CIV CT, CDF is also impacted. The CDF impact depends on the inoperable CIV, its position, and the associated mitigation system function impacted by the inoperable CT. Again, the WOG noted that for this configuration the CT of the CIV would be limited by the mitigation system CT, which can be greater than the current CT of four hours. To address the proposed extended CIV CT, the WOG performed a bounding assessment of the CDF impact on ECCS (as an example) with an increased CIV CT. The WOG considered both preventive and corrective maintenance activities (common cause included). The WOG results indicated that the extended CIV CT impacts on CDF are within the acceptance guidelines given in RG 1.174.

For item 2 above, the NRC staff's RAI requested an evaluation of the impact of an open system on CDF, where the CIV has been removed during preventive or corrective maintenance. With a CIV removed for maintenance, the pressure boundary is not maintained and the impacted system is also inoperable (i.e., the CIV pressure boundary not intact). With a CIV in maintenance but still in place, the pressure boundary may remain intact and the impacted system may remain operable (i.e., the CIV pressure boundary remains intact). The TR evaluated CIVs in open systems with respect to LERF and ICLERP but did not evaluate the impact on CDF. The WOG evaluated two CIV configurations with the first being CIVs connected to the containment atmosphere. With these systems, a CIV that is open and inoperable or removed for maintenance cannot isolate the containment penetration. For CIVs in the line but open and inoperable, the associated mitigation system may or may not be operable depending on the required CIV position requirements. If the CIV is associated with a mitigation system then the inoperable CIV and/or ability and time frame necessary to restore the isolation valve to operability may impact CDF. As stated above, the shorter of the CTs for the CIV and associated inoperable system would be applied.

This second evaluation included CIVs connected to the RCS. An open and inoperable CIV impacts the frequency of an ISLOCA that bypasses containment and a core damage event would result in a large release. The TR evaluation based the CTs for these CIVs on the

LERF/ICLERP acceptance guidelines of RGs 1.174 and 1.177. The WOG stated that values of LERF and ICLERP were used to determine CTs based on the assumption that the impact on LERF and ICLERP would be the limiting metrics over the CDF metric, and was considered for this configuration of CIVs in the TR.

However, CDF may be the limiting metric for an LOCA inside containment where the CIV has been removed for maintenance. In this configuration of CIVs, the CDF is the concern since the penetration has only one CIV to maintain the RCS pressure boundary. The WOG also evaluated this configuration and found that the ICCDP met the acceptance guidelines of RG 1.177. The impact on CDF/ICCDP was evaluated and the results show that the ΔCDF estimates are within the acceptance guidelines of RG 1.174.

The WOG also addressed the ICCDP for CIVs that have an additional safety function that is in the closed position during maintenance. As with the other CIV configurations where CIVs are important to other safety systems, the CT of the impacted systems should also be evaluated. The WOG stated that the shorter of either the CIV or system CT will be applicable. The ICCDP will be equivalent to the limiting system CT estimate.

The TR evaluation uses plant-specific data from WOG plants to demonstrate a bounding methodology that would be applicable to licensees that confirm the bounding assumptions are applicable to their plants. The WOG selected the most limiting value for each input parameter (including valve type) from a plant-to-plant comparison of the WOG plants. The parameters used by the WOG in the calculation of LERF and ICLERP are included in WCAP-15791, Table 8-1. As stated above, the TR grouped CIVs by class and their associated penetration groups based on the type of containment penetration flow path. These assumptions will be assessed by the NRC staff to assure that the TR is applicable for each plant-specific application.

The CIV flow paths that were evaluated in WCAP-15791 are the penetration configuration types (i.e., Class and Group) that are listed in Appendix A to this SE. The TR includes the basis and general assumptions in estimating the risk impact for the proposed CIV CT extensions as listed below:

- Only one CIV is in maintenance with an extended CT at any time. This is a Tier 2 requirement, unless the licensee has proposed the additional ISTS LCO 3.6.3 Condition D in its plant-specific application.

- Maintenance on a valve can be performed such that either the valve is intact and capable of maintaining its pressure boundary function or the valve is not intact and is not capable of maintaining the pressure boundary.

- Before maintenance or corrective maintenance (repair) is performed on a CIV, the TR evaluation assumes that the other CIV(s) in the penetration flow path has been checked to ensure that they are in their proper position. This is a Tier 2 requirement.

- For penetrations with two or more CIVs of the same valve type, common cause failures (CCFs) are included in the TR evaluation. CIVs of the same type are not differentiated

by manufacturer. For CIVs of different valve types, CCFs are not included in the TR evaluation.

- For penetrations with diverse types of CIVs, the TR evaluation was simplified to assume that all CIVs were the same type. Plant-specific applications of the generic analysis and, if used, plant-specific analyses are to be based on the CIV within the penetration with the highest failure rate. Common cause is included when the CIVs in the penetration are the same type (See the previous bullet).

- Multiple systems are not expected to be out of service simultaneously during the extended CTs.

- A deterministic evaluation was used to establish the containment hole size and associated pipe diameter screening threshold value for a large release. The evaluation determined that any CIV in a penetration not connected to the RCS or steam generators (SGs) that has a hole size less than the threshold value would default to a CT of seven days. Based on NRC staff questions concerning the WOG alternate large release criteria and the WOG response to the NRC staff's RAI, a 2-inch containment hole size is used as the screening threshold for a large release for all three containment types (i.e., sub-atmospheric, ice-condenser, and large dry).

  Several studies including NUREG/CR-4330, "Review of Light-Water Reactor Regulatory Requirements," NUREG-1493, "Performance-Based Containment Leak-Test Program," NUREG/CR-6418, "Risk Importance of Containment and Related ESF System Performance Requirements," and NUREG-1765, "Basis Document for Large Early Release Frequency (LERF) Significance Determination Process (SDP)," have been performed to determine the risk significance of various levels of containment leakage. For example, a containment leakage rate of about 100 percent volume per day is approximately equivalent to a hole diameter of 2.5 to 3 inches for a pressurized-water reactor (PWR) large dry containment and 2 inches for a PWR ice condenser containment and is the threshold after which a release may become significant to an LERF.

- Failures (including failure to close on demand, and failure during the CT) for different valve types were evaluated. The TR selected the maximum value for each parameter within each valve type.

- Not all penetration configurations/maintenance situations may be applicable to all plants. Each licensee will determine the applicability of the proposed CTs for their plant following the approach used in Chapter 9 of the TR.

- Pipe failures, not related to a seismic event, were assumed to occur randomly. The frequency of a pipe break was selected based on a review of WCAP-14572-NP-A, Revision 1, "Westinghouse Owners Group Application of Risk-Informed Methods to Piping Inservice Inspection Topical Report." The WOG stated that the largest failure probability was selected for the TR evaluation.

-13-

- Non-seismically qualified piping was assumed to fail with a probability of one, given a seismic event.

- The WOG states that because containment isolation is a function that impacts containment response to an event and not the ability of the plant design to prevent or mitigate core damage, the impact on average CDF and ICCDP due to increased CIV unavailability was not evaluated in the TR. However, for CIVs installed in systems associated with accident mitigation, the WOG provided additional evaluations through responses to the NRC staff's RAI.

- Additional class-specific assumptions are stated for each CIV "Class" in WCAP-15791.

Plant-specific applications will need to discuss whether and how the first, third, and sixth assumptions are incorporated in their plant (1) operating practices, procedures, and TSs, and (2) PRA model.

Although WCAP-15791 states that it is not expected that multiple systems will be out of service simultaneously during extended CTs, it does not preclude the practice. Because LCO 3.6.3 Note 2 allows separate condition entry for each penetration flow path, proposed Condition D addresses an inoperable CIV in more than one penetration flow path and limits the CT for all but one CIV to four hours. Plant-specific applications must verify that the potential for any cumulative risk impact of failed CIVs and multiple CIV LCO entries has been evaluated and is acceptable.

The licensee's Tier 3 risk management program (10 CFR 50.65(a)(4)) must confirm that simultaneous entry for more than one inoperable CIV in separate penetration flow paths are evaluated. The purpose of this evaluation is to ensure that the cumulative risk of plant operation with multiple inoperable CIVs, including a CIV with an extended CT, does not exceed the conclusions of WCAP-15791 and this SE, and that defense-in-depth for safety systems is maintained.

Because not all penetrations in specific plants have the same impact on CDF, LERF, ICCDP, or ICLERP, licensees must address in their plant-specific applications whether or not (a) the CIV configurations for the specific plant match the configurations in the TR and (b) the risk parameter values used in the TR are bounding for the specific plant. Any additional CIV configurations or non-bounding risk parameter values in the plant-specific applications that were not evaluated by the TR must be addressed in the plant-specific analyses. Note that CIV configurations and extended CTs not specifically evaluated by the TR, or non-bounding risk parameter values outside the scope of the TR will require NRC staff review of the specific penetrations and related justifications for the proposed CTs.

3.3 Review Methodology

The NRC staff reviewed the WOG submittal using the three-tiered approach referenced in RG 1.174, RG 1.177, and SRP Chapters 16.1, Revision 1, March 2007, and Chapter 19, Section 19.2, June 2007.

Tier 1 includes assessing the risk impact of the proposed change in accordance with acceptance guidelines consistent with the Commission's Safety Goal Policy Statement, as documented in RGs 1.174 and 1.177. The first tier assesses the impact on operational plant risk based on ΔCDF and ΔLERF. It also evaluates plant risk while equipment covered by the proposed CT is out of service, as represented by the ICCDP and ICLERP. In addition, Tier 1 should establish whether the quality of the PRA and PRA impact assessment are compatible with the safety implications of a proposed plant-specific TS change and that the scope and level of detail of the PRA are adequate to fully support the evaluation of the proposed TS change. Cumulative risk of the proposed TS change in light of past applications, or additional applications under review, should be considered along with an uncertainty/sensitivity analysis with respect to the assumptions related to the proposed TS change. PRA quality of the plant-specific application will be evaluated by the NRC staff, as discussed below.

Tier 2 involves identifying potential high-risk configurations that may exist if other equipment or systems (in addition to the equipment associated with the proposed change) were also taken out of service simultaneously, or subjected to concurrent testing. The purpose of the Tier 2 evaluation is to ensure that appropriate restrictions will be in place to prevent the occurrence of high-risk configurations.

Tier 3 establishes a risk management program for the overall configuration and confirms that risk insights are incorporated into the decisionmaking process before taking equipment out of service prior to or during the CT. The third tier provides additional coverage to ensure risk-significant plant equipment outage configurations are identified in a timely manner and that the risk impact of out-of-service equipment during planned and unplanned maintenance activities is appropriately evaluated prior to performing any maintenance activity over extended periods of plant operation. Licensees can implement the overall CRMP (as referenced in RG 1.177) through the Maintenance Rule of 10 CFR 50.65(a)(4) where implementation of 10 CFR 50.65 incorporates PRAs of sufficient technical quality to support a plant-specific licensing action. Specifically, the rule requires that, before performing any maintenance activity, the licensee must assess and manage the potential risk increase that may result from that activity.

For the quantitative evaluation of the risk impact of extending the current CIV CT from four hours up to a maximum proposed duration of seven days, the WOG developed a methodology to organize various containment penetrations into defined classes and subgroup. This is addressed in Appendix A of this SE. For each defined class and subgroup, the WOG developed generic configurations of containment penetrations to assess the impact on the plant at-power risk utilizing the proposed seven-day CT, and shorter CTs, for the associated penetration CIVs and addressing Tier 1, Tier 2, and Tier 3, as discussed below.

3.3.1 Tier 1: PRA Applicability and Insights

The analyses used in WCAP-15791 are generic and, therefore, each licensee requesting CIV CT extensions will need to justify the applicability of the TR results to their particular plant. It is expected that licensees will evaluate their plant-specific information to confirm the applicability of the WCAP-15791 methodology and results to the plant-specific cases as presented in Chapter 9 or 10 of the TR. The CT changes requested by licensees should correspond to those

included in the TR, and any penetration flow path type not specifically included in the TR will require a plant-specific analysis.

3.3.1.1 PRA Applicability

The objective of the NRC staff's PRA review is to determine whether the TR generic risk assessments used in evaluating the proposed CIV extended CTs were of sufficient scope and detail. The NRC staff reviewed the information provided in WCAP-15791 and, based on the above discussion, the NRC staff concludes that the TR adequately addressed the issue of capability, and the risk analysis was of sufficient scope and detail to estimate the risk associated with the proposed CIV extended CTs on a generic basis. The quality of the licensees' PRA is applicable based on the approved methodology in WCAP-15791, the RG 1.174 PRA quality guidance, and the subsequent impact on Tier 3 evaluations.

To ensure the adequacy of the plant-specific PRA model for Tier 3 evaluations, additional information on the PRA quality will be required of each plant-specific application in the following areas:

1. Assurance that the plant-specific PRA reflects the as-built, as-operated plant.

2. Assurance that the applicable PRA updates include the findings from the individual plant evaluation (IPE) and the IPE for external events. External events may include seismic, high winds, fires, floods, or other related events applicable to each licensee. Licensees must demonstrate, by either quantitative or qualitative means, that external event risk will not have an adverse impact on the conclusions of the plant-specific analyses with respect to the TR evaluation. For some participating plants, internal fires and other external event risk may contribute significantly to overall plant baseline risk which may impact the WCAP-15791 methodology results such that a plant-specific application of the WCAP-15791 methodology may not be found acceptable in all cases. Specifically, the risk from external events should not make the total baseline risk exceed 1E-4/yr CDF or 1E-5/yr LERF without justification.

3. Assurance that conclusions from the peer review, including facts and observations (A and B), per NEI 00-02, "Probabilistic Risk Assessment (PRA) Peer Review Process Guidance," Revision A3 and American Society of Mechanical Engineers (ASME) RA-S-2002, "Standard for Probabilistic Risk Assessment for Nuclear Power Plant Applications," that are applicable to the proposed CIV extended CTs were considered and resolved. If not resolved, justification for acceptability of conclusions (e.g., sensitivity studies showing negligible impact) must be provided. The licensee should indicate the PRA revision that underwent the peer review and the PRA revision that was used in the plant-specific application.

4. Assurance that there is PRA configuration control and updating, including PRA quality assurance programs, associated procedures, and PRA revision schedules.

5. Assurance that there is PRA adequacy, completeness, and applicability with respect to evaluating the risk associated with the proposed CIV CT extensions.

6. Assurance that plant design or operational modifications that are related to or could impact the proposed CT extensions are reflected in the PRA revision used in the plant-specific application, or a justification provided for not including these modifications in the PRA.

3.3.1.2 PRA Insights

One approach to demonstrate that the risk impact of the proposed change is acceptable is to show that the licensing basis meets the key principles set forth in RG 1.174 for the proposed change. One of these principles is to show that when the proposed change results in an increase in risk, the increased risk is small. In addition, the impact of the proposed change should be monitored using performance measurement strategies. RGs 1.174 and 1.177 provide acceptance guidelines for meeting the above principles. Specifically, those guidelines include ΔCDF, ΔLERF, ICCDP, and ICLERP. The risk metrics ICCDP and ICLERP, suggested by RG 1.177, are used in addition to the metrics outlined in RG 1.174 for the evaluation of CTs because CTs are entered infrequently and are temporary in nature.

The risk impact of extending CIV CTs is summarized on a generic basis in Table 8-2 of the TR. The results show that the risk impacts of the proposed CIV CTs are within the ΔLERF and ICLERP acceptance guidelines of RGs 1.174 and 1.177, respectively. The impacts on average CDF and ICCDP due to increased CIV unavailability were addressed in a response to an NRC staff RAI, and the response shows that the estimates for ΔCDF and ICCDP are also within the acceptance guidelines of RGs 1.174 and 1.177. The intent of WCAP-15791 is to provide a generic analysis applicable to all WOG plants; however, the TR also includes a plant-specific analysis in Chapter 10 of the TR where Wolf Creek is the lead plant. A licensee that implements the generic results in WCAP-15791 must demonstrate by its plant-specific application, the applicability of WCAP-15791 input parameter assumptions with respect to ΔCDF, ΔLERF, ICCDP, and ICLERP to their particular plant.

3.3.1.3 PRA Uncertainty

As discussed in RG 1.174 and NUREG/CR-6141, "Handbook of Methods for Risk-Based Analyses of Technical Specifications," a licensee can perform sensitivity studies to provide additional insights into the uncertainties related to the proposed CT extension and demonstrate compliance with the guidelines and evaluate uncertainties related to modeling and completeness issues.

Based on the RAI responses, the WOG stated the parameters used (e.g., valve failure rates, CDF, and CCF values) were based on generic WOG plant PRA values. The estimates used were stated in WCAP-15791 to be the most conservative values obtained from the WOG plant-specific PRA models. Because of this, the WOG stated that the values used in the analysis are bounding and no data uncertainty analysis was required. Therefore, WCAP-15791 did not provide sensitivity studies with respect to the CT extension risk analysis. However, based on the TR's use of bounding values for input parameters, a sensitivity analysis using an upper bound value should be inherent in the results. As a further check, the NRC staff reviewed NUREG-1715, Volume 3, "Component Performance Study - Air-Operated Valves, 1987 - 1998,"

and Volume 4, "Component Performance Study-Motor-Operated Valves, 1987 - 1998 Commercial Power Reactors," data for motor-operated and air-operated valve failures on demand. Although limited to motor-operated and air-operated valves, the data presented in NUREG-1715 show that the CIV failure probability estimates used in WCAP-15791 are consistent with the range of values given in NUREG-1715. NUREG-1715 also indicated a decreasing trend for air-operated valve failures for PWRs in risk-important systems. For motor-operated valves, there were no statistically significant trends noted.

Additional uncertainty due to plant PRA models is not addressed in WCAP-15791, but the use of bounding values from various models should limit model uncertainty in the analysis. In addition, based on responses to the NRC staff's RAI, the WOG generic analysis was redone assuming a CDF total of 1.0E-4/year to bound internal and external events. The new CDF estimate is greater than the original WOG composite total plant internal CDF of 7.8E-5/year.

3.3.2 Tier 2: Avoidance of Risk-Significant Plant Configurations

For the Tier 2 analysis, a licensee must provide reasonable assurance that risk-significant plant equipment outage configurations will not occur when specific plant equipment is out of service in accordance with the proposed extended CIV CT changes. A Tier 2 program is intended to limit the degradation of plant mitigation capabilities with a CIV out of service (i.e., in a LCO condition) such that defense-in-depth is maintained. The TR evaluation identified no generic Tier 2 conditions as a result of the proposed CT extension for CIVs. For licensees adopting WCAP-15791, an evaluation should be performed to confirm that the conclusions of the TR concerning Tier 2 requirements remain applicable to the licensee's plant.

WCAP-15791 provides minimal guidance on cumulative risk impacts, although risk impact is recognized as part of a risk-informed review. With respect to past plant-specific license amendments, or additional plant-specific applications for a TS change under review, and the plant-specific CIV CT application based on WCAP-15791, the cumulative risk must be evaluated on a plant-specific basis consistent with the guidance given in RG 1.174, and addressed in the plant-specific application. Licensees should consider the guidance given in RG 1.174 for combined TS change requests.

Also, the following Tier 2 restrictions address assumptions of the TR. These are the following: (1) unless the licensee has proposed the additional ISTS LCO 3.6.3 Condition D in its plant-specific application, only one CIV can be in maintenance with an extended CT at any time and (2) before maintenance or corrective maintenance (repair) is performed on a CIV, other CIV(s) in the penetration flow path shall have been checked to ensure they are in their proper position.

3.3.3 Tier 3: Risk-Informed Configuration Risk Management

WCAP-15791 did not address Tier 3 requirements and is based on generic plant characteristics, except for the lead plant Wolf Creek plant-specific risk information presented in Chapter 10 of the TR, therefore, licensees adopting the TR must address Tier 3 information concerning their plants in their plant-specific applications.

A Tier 3 program ensures that, while a CIV is in a LCO condition, additional activities will not be performed that could further degrade the capability of the plant to respond to a condition the inoperable CIV or system was designed to mitigate, and, as a result, increase plant risk beyond that assumed by the TR analysis. Tier 3 programs do the following: (1) ensure that additional maintenance does not increase the likelihood of an initiating event intended to be mitigated by the out-of-service equipment, (2) evaluate the effects of additional equipment out of service during CIV maintenance activities that would adversely impact CIV CT risk such as from redundant systems or components, and (3) evaluate the impact of maintenance on equipment or systems assumed to remain operable by the CIV CT analysis. WCAP-15791 did not address Tier 3 requirements and, therefore, these requirements must be addressed by licensees in their plant-specific applications.

Accordingly, for extended CIV CTs, a licensee should have a program to ensure that it appropriately evaluates the risk impact of out-of-service equipment before performing a maintenance activity on a CIV. Licensees can utilize the overall CRMP, as referenced in RG 1.177, through the Maintenance Rule (i.e., 10 CFR 50.65(a)(4)) if the PRA quality aspects of this program meet the quality needs of a risk-informed licensing action. Specifically, the rule requires that, before performing any maintenance activity, the licensee must assess and manage the potential risk increase that may result from that activity. Plant-specific applications referencing WCAP-15791 must include a discussion on the licensee's CRMP for assessing the risk associated with removal of CIVs from service and their conformance to the requirements of 10 CFR 50.65(a)(4), and the additions and clarifications outlined in Section 2.3.7.2 of RG 1.177 as they relate to the proposed extended CIV CTs. The PRA quality guidance in RG 1.174 provides one method to demonstrate such required quality.

The program used by licensees to meet 10 CFR 50.65(a)(4) and assess and manage the increase in risk that may result from proposed maintenance would be required to address the maintenance of CIVs. For the CIVs with extended CTs, the program would need to assess and manage risk in terms of the LERF and ICLERP metrics because the extended CTs are based on these metrics. The licensees proposing extended CIV CTs in plant-specific applications based on WCAP-15791 must discuss how the LERF and ICLERP would be addressed in these programs.

In addition, RG 1.174 also states that an implementation and monitoring plan should be developed to ensure that the impact of the proposed changes continues to reflect the actual reliability and availability of the CIVs evaluated to support the proposed CIV CT extension. Monitoring performed in conformance with the maintenance rule of 10 CFR 50.65 can be used when such monitoring is sufficient for the structures, systems, and components affected by the risk-informed application. WCAP-15791 is based on generic plant characteristics, therefore, each licensee adopting the TR must confirm plant-specific implementation and monitoring in their individual applications. Plant-specific CIV availability will be monitored and assessed by the licensee under the maintenance rule (10 CFR 50.65) to confirm that performance continues to be consistent with the analysis assumptions used to justify the extended CIV CTs.

Although the TR assumes that only one CIV is in maintenance at any time (i.e., there is only one inoperable CIV), the TR notes that the existing ISTS LCO 3.6.3 would allow multiple simultaneous entries into the LCO for inoperable CIVs for which the proposed extended CIV

CTs would apply. Although the existing ISTS LCO 3.6.3 Condition B, which is listed in Section 3.1 of this SE, requires action within one hour when one or more flow paths with two or more inoperable CIVs; there could be multiple inoperable CIVs because the proposed ISTS LCO 3.6.3 Condition A, which has the proposed extended CIV CTs, would allow one or more flow paths each having an inoperable CIV. This case of multiple LCO entries for a single inoperable CIV, in multiple penetrations, incorporating the proposed extended CTs would result in increased CDF, LERF, ICCDP and ICLERP values from those assumed in the TR. Simultaneous multiple entries and the subsequent impact on risk were not evaluated by the WOG, because, as stated in the TR, CIV inoperability is not expected to occur frequently and single CIV inoperabilty in multiple penetrations flow paths is expected to occur less frequently.

In response to the NRC staff's RAI 6, in its February 13, 2004, letter, the WOG stated that the TSs in TSTF-446 would be revised to be consistent with the single inoperable CIV assumed in WCAP-15791. The intent of the revision is to limit the TS condition entry to a single extended CIV CT such that multiple simultaneous inoperable CIVs, each with an extended CT, would not be allowed. The revision is the proposed addition of TS LCO 3.6.3 Condition D, which states that, for two or more penetration flow paths with one CIV inoperable, the required action of isolating all but one flow path is to be completed within four hours, which is the current CT for an inoperable CIV. However, the proposed ISTS LCO 3.6.3 Condition A and the proposed ISTS LCO 3.6.3 Condition D would allow one inoperable CIV in one penetration flow path to be in maintenance in an extended CIV CT (Proposed Condition A) and one or more inoperable CIVs in one or more other penetration flow paths in the four-hour CT (Proposed Condition D). Therefore, in the case of having multiple CIVs inoperable with no more than one inoperable CIV in any penetration flow path, the first inoperable CIV would be in the proposed Condition A with an extended CIV CT, and the second and any other inoperable CIV would be in proposed Condition D because Note 2 to ISTS LCO 3.6.3 allows a separate condition entry for each penetration flow path.

The Required Action D.1 for proposed Condition D would require all but one penetration flow path to be isolated within four hours of when the second CIV was found inoperable, or the plant would be required to shut down because the required action and associated CT were not being met. The remaining inoperable CIV would be in proposed Condition A, and its CT would be that for the appropriate CIV category in WCAP-15791, Appendix D.

The required action for proposed Condition D would require all but one penetration flow path to be isolated, within the four hours or start shutting down the plant, therefore, the case of more than one inoperable CIV would exist for no longer time than the four hours. Therefore, there could not exist more than one inoperable CIV in an extended CIV CT for more than four hours without the plant having to shut down. Because the longest time period where more than one CIV may be inoperable is the four-hour CT allowed by existing ISTS LCO 3.6.3 Condition A for an inoperable CIV, the NRC staff concludes that the proposed Condition D meets the TR assumption that only one CIV is in maintenance at the extended CIV CT at any time.

If the plant-specific TSs would allow CIV maintenance that could include multiple simultaneous LCO entries for single inoperative CIVs, in multiple penetrations, then this case must be evaluated in the plant-specific applications to demonstrate that the risk-impact assumptions of CDF, LERF, ICCDP, and ICLERP remain less than the RGs 1.174 and 1.177 acceptance

guidelines and are consistent with the guidance contained in NUMARC 93.01, "Industry Guidelines for Monitoring the Effectiveness of Maintenance at Nuclear Power Plants," Section 11, "Assessment of Risk Resulting from Performance of Maintenance Activities," as endorsed by RG 1.182, "Assessing and Managing Risk Before Maintenance Activities at Nuclear Power Plants." CIV extended CTs as implemented per the NRC staff findings and conditions of this SE and the Maintenance Rule (10 CFR 50.65(a)(4)) will limit the overall risk associated with extended CIV CT interval maintenance. As discussed above, the NRC staff has concluded that the proposed ISTS LCO 3.6.3 Condition D would prevent this case of multiple inoperable CIVs with one CIV in maintenance in an extended CIV CT.

3.4 Regulatory Commitments

The RG 1.177 Tier 3 program ensures that while a CIV is in an LCO condition, additional activities will not be performed that could further degrade the capabilities of the plant to respond to a condition for which the inoperable CIV or system was designed to mitigate, and as a result, increase plant risk beyond that assumed by the TR analysis. A licensee's implementation of RG 1.177 Tier 3 guidelines generally implies the assessment of risk with respect to CDF. However, the proposed CIV CT impacts containment isolation and consequently LERF and ICLERP, as well as CDF. The equations used in WCAP-15791 to determine the extended CIV CTs are based on the LERF and ICLERP metrics, therefore, the management of risk in accordance with 10 CFR 50.65(a)(4) for these extended CIV CTs must assess LERF and ICLERP.

Therefore, a licensee's CRMP, including those implemented under the Maintenance Rule of 10 CFR 50.65(a)(4), must be addressed in the plant-specific submittal to explain how LERF/ICLERP is assessed and must be documented in the plant-specific applications as a regulatory commitment (i.e., included in the licensee's commitment tracking system in accordance with NEI 99-04, Revision 0, "Guidelines for Managing NRC Commitment Changes") in the licensees' plant-specific applications referencing WCAP-15791, as well as demonstrating PRA quality as part of the licensee's Tier 3 assessment. Since NUMARC 93-01 implements ILERP as the quantitative risk metric (i.e., based on a zero maintenance model) and RG 1.177 utilizes ICLERP (i.e., based on an average maintenance model), the licensees, in their implementation of WCAP-15791, will need to demonstrate the equivalence for Tier 3 decisionmaking.

The NRC staff finds that reasonable controls for the implementation and for subsequent evaluation of proposed changes pertaining to regulatory commitment(s) can be provided by the licensees' administrative processes, including their commitment management program. The NRC staff has agreed that NEI 99-04 provides reasonable guidance for the control of regulatory commitments made to the NRC staff (see Regulatory Issue Summary 2000-17, "Managing Regulatory Commitments Made by Power Reactor Licensees to the NRC Staff," dated September 21, 2000). The NRC staff notes that this establishes a voluntary reporting system for the operating data that is similar to the system established for the ROP PI program. The commitments would be controlled in accordance with the industry guidance or comparable criteria employed by a specific licensee. The NRC staff may choose to verify the implementation and maintenance of these commitments in a future inspection or audit. Should licensees choose to incorporate a regulatory commitment into the final safety analysis report or

other document with established regulatory controls, the associated regulations would define the appropriate change-control and reporting requirements.

3.5 NRC Staff Conclusions in Plant-Specific License Amendment Requests Referencing WCAP-15791

The results presented in WCAP-15791 are consistent with the specific guidance and acceptance guidelines given in RGs 1.174 and 1.177, and outlined in SRP Chapter 16, Section 16.1, Revision 1, March 2007, and Chapter 19, Section 19.2, July 2007, of NUREG-0800, and show a small increase in plant risk due to the extension of CIV CTs up to seven days. The proposed CIV CTs in the plant-specific applications referencing WCAP-15791 would also meet this criteria if the plant-specific submittals showed the following:

- Licensees that apply the generic results have confirmed that the generic WOG plant PRA values used for the Tier 1 evaluations in WCAP-15791 envelope the PRA values for their plants,
- Licensees have confirmed that the penetration flow path configurations used in WCAP-15791 to justify extended CIV CTs are applicable to their plants,
- Licensees have confirmed that the assumptions (the first, third, and sixth bullets) in Section 3.2 in this SE are met at their plants, including the assumption that not more than one CIV is in maintenance and in an extended CT at a time,
- Licensees have confirmed that the CIV configurations addressed in their plant-specific application match the configurations in the TR and have correlated the CIVs to the 14 categories of CIVs, with CTs from four hours to seven days as described in WCAP-15791 Tables D-1 and D-2, for their plants,
- Licensees have confirmed that no additional Tier 2 requirements are needed, as is stated in WCAP-15791, or have acceptably addressed what are the Tier 2 requirements for their plants, and
- Licensees have acceptably addressed the Tier 3 requirements for their plants.

Based on the licensees demonstrating that the above review elements are met, the NRC staff would conclude in the evaluations of the plant-specific license amendment requests that the calculations of ICLERP and ΔLERF for the proposed CIV CTs described in WCAP-15791 are acceptably justified. This includes the calculations performed to justify the CTs for the Category 1 through 14 valves listed in TR Tables D-1 and D-2. Based on this, the NRC staff would conclude that WCAP-15791 provides an acceptable methodology for determining plant-specific CIV CTs of up to seven days, because the CIV CTs based on WCAP-15791 would meet 10 CFR 50.36.

4.0 LIMITATIONS AND CONDITIONS

1. WCAP-15791 is based on only one CIV being in maintenance at any time. The TR states that it is not expected that multiple systems will be out of service simultaneously during extended CTs, but the TR does not preclude the practice. Although TS LCO 3.6.3 Note 2 allows separate condition entry for each penetration flow path, proposed Condition D (see Section 3.3.3 of this SE) addresses an inoperable CIV in more than one peneration flow path and limits the CT to four hours. If the licensees' proposed TS change does not include this Condition D, then the licensees' applications must verify that the potential for any cumulative risk impact of failed CIVs and multiple CIV LCO entries has been evaluated and is acceptable. The licensee must confirm that its Tier 3 risk management program in accordance with 10 CFR 50.65(a)(4) will address the possibility of simultaneous LCO entries of inoperable CIVs in separate penetrations such that defense-in-depth for safety systems is maintained. (See Section 3.2 of this SE.)

2. The existing and proposed TS 3.6.3 must not allow multiple simultaneous extended CIV CTs to occur for more than four hours, which is the existing CT for an inoperable CIV in ISTS LCO 3.6.3. This is to meet the TR assumption listed in Section 3.2 of this SE that only one valve within a single penetration can be in maintenance at a time (i.e., for more than the four hours allowed by the current ISTS LCO 3.6.3 Condition A). The existing ISTS LCO 3.6.3 Condition B, and the proposed ISTS 3.6.3 Conditions A and D, assure that this assumption is being met. If the TSs do not prevent this case (i.e., Condition D is not adopted), then this case must be evaluated in the plant-specific applications to demonstrate that the risk impact assumptions of CDF, LERF, ICCDP and ICLERP remain less than the RGs 1.174 and 1.177 acceptance guidelines as discussed in Section 3.3.3 of this SE. Also, the plant-specific application must address if the position of the remaining CIVs in the affected penetration flow path, or another penetration flow path, are confirmed before entering the extended CT for the inoperable CIV. (See Section 3.3.3 of this SE.)

5.0 ADDITIONAL INFORMATION NEEDED IN APPLICATIONS REFERENCING TR WCAP-15791

The additional information that must be provided in the plant-specific applications referencing WCAP-15791 is as follows:

1. Address how the first, third, and sixth items of the basis and general assumptions of WCAP-15791, which are listed in Section 3.2 in the SE, are incorporated in the specific plant practices, procedures, TSs, and PRA. (See Section 3.2 of this SE.)

2. Not all penetrations have the same impact on CDF, LERF, ICCDP, or ICLERP, therefore, verify the applicability of WCAP-15791 to the specific plant, including verification that (a) the CIV configurations for the specific plant match the configurations in the TR and (b) the risk-parameter values used in the TR are bounding for the specific plant. Any additional CIV configurations, CT extensions, or non-bounding risk parameter values not evaluated by the TR should be addressed in the plant-specific analyses. Note that CIV configurations and extended CTs not specifically evaluated by the TR, or

non-bounding risk parameter values outside the scope of the TR will require NRC staff review of the specific penetrations and related justifications for the proposed CTs. (See Sections 3.2 and 3.3.1 of this SE.)

3. Confirm that the Tier 2 conclusion of the TR (i.e., no Tier 2 requirements are needed) is applicable to the specific plant, or provide the plant-specific Tier 2 requirements needed for the plant. (Section 3.3.2 of this SE.)

4. WCAP-15791 does not address Tier 3, therefore, each plant-specific application must address Tier 3 for the specific plant. The plant-specific application must discuss conformance to the requirements of the Maintenance Rule (i.e., 10 CFR 50.65(a)(4)), as the requirements relate to the proposed CIV CTs and the guidance contained in NUMARC 93.01, Section 11, as endorsed by RG 1.182, including verification that the licensee's maintenance rule program, with respect to CIVs, includes a LERF/ICLERP (i.e., ILERP as defined in NUMARC 93-01) assessment as part of the maintenance rule process, and that the PRA quality is adequate as part of the basis of a risk-informed licensing action. (See Sections 3.3.3 and 3.4 of this SE.)

5. Verify that the plant-specific PRA quality is acceptable for Tier 3 applications in accordance with the guidelines given in RGs 1.174 and 1.177, which are identified in the six items listed in Section 3.3.1.1 of this SE. (See Section 3.3.1.1 of this SE.)

6. Verify that external event risk, including seismic and fires, either through quantitative or qualitative evaluation, is bounded by the TR assumptions and will not have an adverse impact on the conclusions of the plant-specific analysis for extending the CIV CTs. (See Section 3.3.1.1 of this SE.)

7. Address how plant-specific CIV availability is monitored and assessed at the plant under the Maintenance Rule (i.e., 10 CFR 50.65) to confirm that performance continues to be consistent with the analysis assumptions used to justify extended CIV CTs, including the assumptions in WCAP-15791 (which are discussed in Section 3.2 of this SE). (See Section 3.3.3 of this SE.)

8. The cumulative risk impact of the proposed CIV CT extensions must be addressed in the plant-specific application in accordance with the acceptance guidelines in RG 1.174. The cumulative risk impact must include both previous plant license changes and additional plant applications still under review. (See Section 3.3.2 of this SE.)

9. Uncertainty due to plant PRA models is not addressed in WCAP-15791, therefore, the plant-specific applications must discuss uncertainties in the risk assessment. (See Section 3.3.1.3 of this SE.)

10. Address the plant CRMP, including the Maintenance Rule program implemented under 10 CFR 50.65(a)(4), and explain how the LERF/ICLERP is assessed in the program. This assessment is to be documented in a regulatory commitment in the plant-specific application. (See Section 3.4 of this SE.)

6.0 CONCLUSIONS

The risk impact of the proposed seven-day CT for the CIVs, as estimated by ΔCDF, ΔLERF, ICCDP, and ICLERP, is consistent with the acceptance guidelines specified in RG 1.174, RG 1.177, and staff guidance outlined in SRP Chapter 16, Section 16.1, Revision 1, March 2007, and Chapter 19, Section 19.2, July 2007, of NUREG-0800. However, to be within these guidelines, some CIV CTs had to be less than seven days. WCAP-15791 shows that shorter than seven-day CTs were justified for certain CIV groupings as listed in WCAP Tables D-1 and D-2. The NRC staff finds that the risk-analysis methodology and approach used by the WOG to estimate the risk impacts were reasonable and of sufficient quality. The Tier 2 evaluation did not identify any risk-significant plant equipment configurations requiring TSs, or procedural, or compensatory measures, on a generic basis, but a plant-specific assessment of Tier 2 considerations must be done by licensees for plants adopting WCAP-15791 to confirm or adjust this aspect of the evaluation, as appropriate. WCAP-15791 references a CRMP for Tier 3 using 10 CFR 50.65(a)(4) to manage plant risk when CIVs are taken out of service. CIV availability will also be monitored and assessed under the maintenance rule (10 CFR 50.65) to confirm that performance continues to be consistent with the analysis assumptions used to justify extended CIVs CTs. Based on the above, and the fact that the licensee demonstrates that PRA quality is adequate as part of the basis of a risk-informed application, the NRC staff finds that the proposed seven-day and shorter CIV CTs are acceptable for the CIVs as described in WCAP-15791 for Westinghouse pressurized water reactors. However, the conditions and additional information needed, as identified in Sections 4 and 5 of this SE, must also be addressed by licensees adopting WCAP-15791 in their plant-specific applications.

Although Wolf Creek plant-specific information was presented in Chapter 10 of the TR, the NRC staff did not review that data to draw any conclusion about the acceptability of CIV CTs in WCAP-15791 for the Wolf Creek plant. Also, although TSTF-446 is not addressed in the SE, it is referred to in Sections 3.1 and 3.3.3 of the SE because the WOG referenced the TSTF in its response to an NRC RAI. The acceptability of the TSs in the proposed TSTF will be addressed in a separate evaluation.

Attachments:
1. Appendix A, "WCAP-15791 Analysis of Containment Isolation Valve Completion Times"
2. Comment Resolution Table

Principal Contributors: Cliff Doutt
Jack Donohew

Date: February 13, 2008

APPENDIX A

WCAP-15791 ANALYSIS OF CONTAINMENT ISOLATION VALVE COMPLETION TIMES

As stated in WCAP-15791, the containment isolation valves (CIVs) are used in plants to isolate the containment penetration flow paths with, typically, one CIV inside and one CIV outside containment performing this function. Depending on the purpose of the system which has CIVs, the CIVs may be normally open or closed. Also, these systems are considered either an open or closed system as follows: (1) an open system inside the containment is directly connected to the containment atmosphere and an open system outside containment is directly connected to the outside atmosphere and (2) a closed system inside containment is not directly connected to the containment atmosphere (e.g., a run of pipe inside containment) and a closed system outside containment is not directly connected to the outside atmosphere. A closed system might not have a CIV.

WCAP-15791 evaluated penetrations that connect directly to containment atmosphere, connect directly to the reactor coolant system (RCS), and connect directly to the steam generators (SGs). The evaluation included both penetration flow paths with multiple isolation valves and penetration flow paths with a single isolation valve and a closed system. The analysis also included CIV maintenance activities that cause the CIV to be inoperable as a pressure boundary or maintenance activities that allow a CIV to remain functional as a pressure boundary.

Regulatory Guide 1.177 provides generally acceptable bases for approving a Technical Specification (TS) change. Among these bases are improvements in operational safety, the TS change can be supported on a risk basis, and the change may be requested to reduce unnecessary burden caused by complying with current TS requirements. The Westinghouse Owners Group (WOG) stated that the proposed CIV extensions are to improve operational safety and reduce unnecessary burden. The proposed CIV completion time (CT) extensions are intended to provide for the performance of on-line testing, maintenance, and repair of CIVs declared inoperable during Modes 1, 2, 3, and 4. The WOG stated the proposed changes are acceptable based on the low risk associated with the extended CTs. In addition, the extended CTs provide additional flexibility in the performance of preventive and corrective maintenance during power operation and reduce the potential for plant shutdown and possible plant transients introduced by this reactor mode change. The original intent of the WOG methodology was to extend the CT for an inoperable CIV to seven days, consistent with the acceptance guidelines given in RGs 1.174 and 1.177; however, based on analysis results, a CT of less than the seven days was required to meet the acceptance guidelines for some CIVs. Therefore, WCAP-15791 supports CTs of four hours to 168 hours for an inoperable CIV.

The approach taken by the TR applied both deterministic and probabilistic evaluations. The deterministic approach was used to determine the minimum-containment hole size that would result in a large release from containment and penetration flow paths connected to the containment atmosphere smaller than this size were proposed to have a CT of seven days. All other penetrations were then evaluated on a probabilistic basis to demonstrate that either a CT of seven days is acceptable, or to determine a CT that is less than seven days.

ATTACHMENT 1

For Tier 1, probabilistic risk assessment (PRA) capability and insights, the TR assessed the impact of the proposed CT on the incremental conditional large early release probability (ICLERP) and change in large early release frequency (ΔLERF) for each type of CIV penetration configuration that was evaluated. The impact of the change in core damage frequency (ΔCDF) was not evaluated in the TR because containment isolation is a function that impacts the containment response to an event and not the ability of the plant design to prevent or mitigate core damage. For Tier 2, avoidance of risk-significant plant configurations, WCAP-15791 did not identify any risk-significant Tier 2 plant equipment outage configurations requiring TS, procedure, or compensatory measures. The NRC staff addressed Tier 2 requirements and stated that an evaluation must be performed by licensees adopting WCAP-15791 and the results confirmed on a plant-specific basis. For Tier 3, risk-informed plant configurations, the TR did not address Tier 3 requirements and, therefore, these requirements will be addressed by licensees on a plant-specific basis in their plant-specific applications.

For Tier 1, if the ICLERP and ΔLERF for the CIV penetration configuration meet the criteria in RGs 1.174 and 1.177 (less than 5.0E-08 and 1.0E-07/year, respectively), a 168-hour (or seven-day) CT would be acceptable for the penetration configuration. For those penetration configurations that do not meet these criteria, CTs of 72, 48, 24, 12, or eight hours were evaluated in the equations for ICLERP and ΔLERF, and the largest CT where the ICLERP and ΔLERF meet the criteria in RGs 1.174 and 1.177 was judged to be acceptable for the penetration configurations.

The probabilistic evaluation is consistent with NRC's approach for using PRA in risk-informed decisions on plant-specific changes to the plant current licensing basis addressed in RGs 1.174 and 1.177. This approach evaluated the risk impact of the CT on a generic basis and on a plant-specific bases using the Wolf Creek Generating Station (Wolf Creek) as the lead plant. Data for both the generic case and for Wolf Creek are in WCAP-15791. Any licensee submitting a plant-specific application that references WCAP-15791 would need to demonstrate that the TR analysis is applicable to their plants.

The TR grouped the different types of penetration flow path configurations depending on (1) the system of interest and (2) if the system is closed or open with respect to the containment and outside atmospheres. In general, the following penetration configuration types that were evaluated are as follows:

Class I:

Penetrations with flow paths to the containment atmosphere:

- Group IA: Flow paths connected directly to the containment atmosphere and the outside environment (open/open penetration type).
- Group IB: Flow paths closed inside containment and connected directly to the outside environment (closed/open penetration).
- Group IC: Flow paths connected directly to the containment atmosphere and closed outside containment (open/closed penetration).
- Group ID: Flow paths closed inside containment and closed outside containment (closed/closed penetration type).

Class II:

Penetrations with flow paths to the RCS:

- Group IIA: Standby flow paths.
- Group IIB: Normally operating flow paths.

Class III:

Penetrations with flow paths to the SGs:

- Group IIIA: Flow paths connected to the SG secondary side and open to the outside environment.
- Group IIIB: Flow paths connected to the SG secondary side and closed to the outside environment.

In addition, the penetration flow paths within the above classification were further grouped by the following: (1) the arrangement of the CIVs (the penetration description) and (2) the maintenance on the inside and/or outside CIVs (i.e., the IC and/or OC valves) that affected the CIV's function as a pressure boundary and activities that allowed the CIVs to retain their pressure boundary functionality (the maintenance description). ICLERP and ΔLERF calculations were then done for each group of CIVs to decide on the maximum CT for the group, and the different groups and calculations were listed in tables as to the generic assessment of the impact on risk (Chapter 8 of the TR), the lead plant application of the generic analysis (Chapter 9 of the TR), and the recalculate CT for the lead plant-specific analysis (Chapter 10 of the TR).

Examples of the generic calculations of the ICLERP and ΔLERF for different groups of CIVs are given in Section 8.2 of the TR for the generic assessment of the impact on risk. The calculation number and CIV group are listed in the table. The calculation number is the specific calculation used to determine the CT for the CIV; however, not all the calculations are in Section 8.2 of the TR. There are no calculations in Chapters 9 and 10 of the TR because the calculations are the same in terms of the generic assessment of the impact on risk. Only the input numbers would change as the lead plant is considered in these chapters.

Chapter 9 of the TR presents the analysis and assumptions used in the lead plant application of the generic assessment addressed in Chapter 8 of the TR. This involved identifying the lead plant CIVs and their configuration, using the two-inch containment hole size criteria to determine the "small lines" that are automatically justified for the seven-day CT, matching the remaining "large line" CIVs to the appropriate generic penetrations in Tables 8.2 through 8.4 of the TR, and finally determining the CTs based on the generic calculations of ICLERP and ΔLERF for the CIVs. Table 9-2 of the WCAP lists the lead plant penetrations and the CIVs on the penetration with the grouping explanation, the generic CIV group and calculation number, and the maintenance activity type for the CIV. In Chapter 9 of the TR, no plant-specific information was used except for the plant-specific CIVs and their configuration in the plant. The CTs justified for the CIVs are also given in Table 9-2 of the TR.

In Chapter 10 of the TR, the plant-specific PRA data (i.e., the Wolf Creek data) were also used in what would be the plant-specific calculations of ICLERP and ΔLERF to determine the CTs for

the CIVs. The plant-specific calculations used the data given in Tables 9-1a through 9-1c of the TR, and the justified CTs are listed in Table 10-1 of the TR.

For plant-specific applications, WCAP-15791 provides an option to use plant-specific data instead of generic data. The purpose of this option is to provide licensees the ability to further analyze a CIV that did not qualify for the full seven-day CT in the generic results. Chapter 10 of the TR describes the methodology to be used to replace the generic data in the analysis with plant-specific data such that CTs limited to seven days by the generic methodology may qualify for a further extended CT using a plant-specific approach. The use of plant-specific data by a licensee must be justified when implementing WCAP-15791.

The results in Tables 9-2 and 10-1 of the TR are for both the system pressure boundary maintained and system pressure boundary compromised for the maintenance activity type.

Comment Resolution Table

PAGE NO.	LINE NO.	COMMENTS	NRC RESOLUTION
13	8 - 9	It is stated "Plant-specific applications will need to discuss whether and how the above assumptions are incorporated in their plant (1) operating practices, procedures, and TSs, and (2) PRA models". This statement is inconsistent with item #1 in Section 5 which states "Address how the first, third, and sixth items of the general assumptions of WCAP-15791, which are listed in Section 3.2 in the SE, are incorporated in the specific plant practices, procedures, TS, and PRA." It is suggested that the sentence on lines 8-9 be modified as follows "Plant-specific applications will need to discuss whether and how the first, third, and sixth assumptions are incorporated in their plant (1) operating practices, procedures, and TSs, and (2) PRA models." Note that the revised words are underlined.	ACCEPTED
13	13 - 14	It is stated "..., Proposed Condition D addresses an inoperable CIV in more than one penetration flow path and limits the CT to four hours." Proposed Condition D limits all but one CIV to 4 hours. The CT for one CIV is allowed to be greater than 4 hours. For clarification purposes, it is suggested that this sentence be modified as follows "..., Proposed Condition D addresses an inoperable CIV in more than one penetration flow path and limits the CT for all but one CIV to four hours. Note that the revised words are underlined.	ACCEPTED
16	13 - 16	It is stated "A licensee that implements WCAP-15791 must demonstrate by its plant-specific application, the applicability of the WCAP-15791 input parameter assumptions with respect to ΔCDF, ΔLERF, ICCDP, and ICLERP to their particular plant." It is only necessary to demonstrate the applicability of WCAP-15791 input parameter assumptions if the generic results in the WCAP are being applied. Therefore, the following change is suggested "A licensee that implements the generic results in WCAP-15791...". Note that the revised words are underlined.	ACCEPTED
18	24 - 27	It is stated "Plant-specific CIV reliability and availability will be monitored and assessed..." As noted in previous PWROG comments, it is not necessary to monitor and assess reliability. The CIV reliability is not impacted by the proposed CT changes. Therefore, it is suggested that "reliability and" be removed from this sentence. This statement will then be consistent with Item 7 in Section 5.0 of the Safety Evaluation.	ACCEPTED

ATTACHMENT 2

21	10 - 11	It is stated "Licensees have confirmed that (1) the generic WOG PRA values used for the Tier 1 evaluations in WCAP-15791 envelope the PRA values for their plants...". This statement is almost duplicative of the statement on Page 20, Lines 41-43 (both are bullets in Section 3.5). The difference is that the statement on Page 20, Lines 41-43 specifies that this applies to licensees that apply the generic results, which is correct. It is suggested that the statement on Page 21, Lines 10-11 be deleted since it is incorrect and, if it was corrected, it would duplicate what is already stated.	ACCEPTED
22	14	Suggest adding the underlined words in the following sentence to be consistent with Section 3.2 and Section 8.2 of the WCAP. "Address how the first, third, and sixth items of the basis and general assumptions..."	ACCEPTED
22	43 - 45	It should be specified that this PRA quality requirement is only required for the Tier 3 evaluations to be consistent with Page 15, Line 4. Suggest replacing the word "this" with "Tier 3" in the following sentence "Verify that the plant-specific PRA quality is acceptable for this application... ." The revise sentence will be "Verify that the plant-specific PRA quality is acceptable for Tier 3 applications...".	ACCEPTED
23	38 - 39	It is stated "CIV reliability and availability will also be monitored... ." The words "reliability and" should be removed from this sentence. This statement will then be consistent with Item 7 in Section 5.0 of the Safety Evaluation and the WCAP.	ACCEPTED
23	41 - 42	It should be specified that this PRA quality requirement is only required for the Tier 3 evaluations to be consistent with Page 15, Line 4. It suggested that the underlined words be added to the sentence "...that PRA quality is adequate for Tier 3 evaluations as part of the basis... ."	NOT ACCEPTED (See next comment)
E-mail dated Jan. 11, 2008	NA	... if the statement in Section 6 "...and the fact that the licensee demonstrates that PRA quality is adequate as part of the basis of a risk-informed application..." will not be interpreted by future Staff reviewers, of LARs implementing these changes, to extend beyond Item 5 in Section 5.0, then it's OK not to make the change proposed in Item 9. We made this comment thinking a future Staff reviewer may interpret this to require PRA quality beyond that required to meet the statement in Item 5 in Section 5.0.	The reviewers will not misinterpret the conclusion statement in Section 6.0 about PRA quality because the earlier statement in Section 5.0 of the Final SE states that the PRA quality applies to the level III PRA considerations.

- 2 -

LEGAL NOTICE

This report was prepared as an account of work performed by Westinghouse Electric Company LLC. Neither Westinghouse Electric Company LLC, nor any person acting on its behalf:

A. Makes any warranty or representation, express or implied including the warranties of fitness for a particular purpose or merchantability, with respect to the accuracy, completeness, or usefulness of the information contained in this report, or that the use of any information, apparatus, method, or process disclosed in this report may not infringe privately owned rights; or

B. Assumes any liabilities with respect to the use of, or for damages resulting from the use of, any information, apparatus, method, or process disclosed in this report.

COPYRIGHT NOTICE

This report has been prepared by Westinghouse Electric Company LLC and bears a Westinghouse Electric Company copyright notice. As a member of the PWR Owners Group, you are permitted to copy and redistribute all or portions of the report within your organization; however all copies made by you must include the copyright notice in all instances.

DISTRIBUTION NOTICE

This report was prepared for the PWR Owners Group. This Distribution Notice is intended to establish guidance for access to this information. This report (including proprietary and non-proprietary versions) is not to be provided to any individual or organization outside of the PWR Owners Group program participants without prior written approval of the PWR Owners Group Program Management Office. However, prior written approval is not required for program participants to provide copies of Class 3 Non Proprietary reports to third parties that are supporting implementation at their plant, and for submittals to the NRC.

FOREWORD

This document contains Westinghouse Electric Company proprietary information and data which has been identified by brackets. Coding associated with the brackets sets forth the basis on which the information is considered proprietary. These codes are listed with their meanings in WCAP-7211.

The proprietary information and data contained in this report were obtained at considerable Westinghouse expense and its release could seriously affect our competitive position. This information is to be withheld from public disclosure in accordance with the Rules of Practice 10 CFR 2.790 and the information presented herein be safeguarded in accordance with 10 CFR 2.903. Withholding of this information does not adversely affect the public interest.

This information has been provided for your internal use only and should not be released to persons or organizations outside the Directorate of Regulation and the ACRS without the express written approval of Westinghouse Electric Company. Should it become necessary to release this information to such persons as part of the review procedure, please contact Westinghouse Electric Company, which will make the necessary arrangements required to protect the Corporation's proprietary interests.

The proprietary information is deleted in the unclassified version of this report (WCAP-15791-NP-A, Revision 2).

PWR Owners Group Member Participation* for Project/Task MUHP-3010/PA-LSC-0029/PA-LSC-0135			
Utility Member	Plant Site(s)	Participant	
		Yes	No
AmerenUE	Callaway (W)	X	
American Electric Power	D.C. Cook 1&2 (W)	X	
Arizona Public Service	Palo Verde Unit 1, 2, & 3 (CE)		X
Constellation Energy Group	Calvert Cliffs 1 & 2 (CE)		X
Constellation Energy Group	Ginna (W)	X	
Dominion Connecticut	Millstone 2 (CE)		X
Dominion Connecticut	Millstone 3 (W)	X	
Dominion Kewaunee	Kewaunee (W)	X	
Dominion VA	North Anna 1 & 2, Surry 1 & 2 (W)	X	
Duke Energy	Catawba 1 & 2, McGuire 1 & 2 (W), Oconee 1, 2, 3 (B&W)	X	 X
Entergy	Palisades (CE)		X
Entergy Nuclear Northeast	Indian Point 2 & 3 (W)	X	
Entergy Operations South	Arkansas 2, Waterford 3 (CE), Arkansas 1 (B&W)		X X
Exelon Generation Co. LLC	Braidwood 1 & 2, Byron 1 & 2 (W), TMI 1 (B&W)	X	 X
FirstEnergy Nuclear Operating Co	Beaver Valley 1 & 2 (W), Davis-Besse (B&W)	X	 X
Florida Power & Light Group	St. Lucie 1 & 2 (CE)		X
Florida Power & Light Group	Turkey Point 3 & 4, Seabrook (W)	X	
Florida Power & Light Group	Pt. Beach 1&2 (W)	X	
Luminant Power	Comanche Peak 1 & 2 (W)	X	
Nuclear Management Company	Prairie Island 1&2	X	
Omaha Public Power District	Fort Calhoun (CE)		X
Pacific Gas & Electric	Diablo Canyon 1 & 2 (W)	X	
Progress Energy	Robinson 2, Shearon Harris (W), Crystal River 3 (B&W)	X	 X
PSEG - Nuclear	Salem 1 & 2 (W)	X	
Southern California Edison	SONGS 2 & 3 (CE)		X
South Carolina Electric & Gas	V.C. Summer (W)	X	
So. Texas Project Nuclear Operating Co.	South Texas Project 1 & 2 (W)	X	
Southern Nuclear Operating Co.	Farley 1 & 2, Vogtle 1 & 2 (W)	X	
Tennessee Valley Authority	Sequoyah 1 & 2, Watts Bar (W)	X	
Wolf Creek Nuclear Operating Co.	Wolf Creek (W)	X	

* Project participants as of the date the final deliverable was completed. On occasion, additional members will join a project. Please contact the PWR Owners Group Program Management Office to verify participation before sending this document to participants not listed above.

PWR Owners Group International Member Participation* for Project/Task MUHP-3010/PA-LSC-0029/PA-LSC-0135			
		Participant	
Utility Member	Plant Site(s)	Yes	No
British Energy	Sizewell B	X	
Electrabel (Belgian Utilities)	Doel 1, 2 & 4, Tihange 1 & 3	X	
Hokkaido	Tomari 1 & 2		X
Japan Atomic Power Company	Tsuruga 2		X
Kansai Electric Co., LTD	Mihama 1, Ohi 1 & 2, Takahama 1 (W)	X	
Korea Hydro & Nuclear Power Corp.	Kori 1, 2, 3 & 4 Yonggwang 1 & 2 (W)	X X	
Korea Hydro & Nuclear Power Corp.	Yonggwang 3, 4, 5 & 6 Ulchin 3, 4 , 5 & 6(CE)		X X
Kyushu	Genkai 1, 2, 3 & 4, Sendai 1 & 2		X
Nuklearna Electrarna KRSKO	Krsko (W)	X	
Nordostschweizerische Kraftwerke AG (NOK)	Beznau 1 & 2 (W)	X	
Ringhals AB	Ringhals 2, 3 & 4 (W)	X	
Shikoku	Ikata 1, 2 & 3		X
Spanish Utilities	Asco 1 & 2, Vandellos 2, Almaraz 1 & 2 (W)	X X	
Taiwan Power Co.	Maanshan 1 & 2 (W)	X	
Electricite de France	54 Units	X	

* This is a list of participants in this project as of the date the final deliverable was completed. On occasion, additional members will join a project. Please contact the PWR Owners Group Program Management Office to verify participation before sending documents to participants not listed above.

TABLE OF CONTENTS

LIST OF TABLES xliii

LIST OF FIGURES xlv

LIST OF ACRONYMS xlvii

IDENTIFICATION OF REVISIONS xlix

EXECUTIVE SUMMARY lv

1 INTRODUCTION 1-1

2 TECHNICAL SPECIFICATIONS 2-1

3 NEED FOR COMPLETION TIME CHANGE 3-1

4 TECHNICAL SPECIFICATION CHANGE REQUEST 4-1

5 DESIGN BASIS REQUIREMENTS AND IMPACT 5-1

6 SYSTEM DESCRIPTION 6-1

7 IMPACT ON DEFENSE-IN-DEPTH AND SAFETY MARGINS 7-1

7.1 IMPACT ON DEFENSE-IN-DEPTH 7-1
7.2 IMPACT ON SAFETY MARGINS 7-2

8 GENERIC ASSESSMENT OF IMPACT ON RISK 8-1

8.1 TIER 1: APPROACH TO THE EVALUATION 8-1
8.2 PROBABILISTIC EVALUATION OF THE CONTAINMENT PENETRATIONS 8-2
8.2.1 Analysis Input Parameters 8-4
8.2.2 Class I: Penetration Flow Paths Connected to the Containment Atmosphere 8-7
8.2.2.1 Group IA: Flow paths connected directly to the containment atmosphere and the outside environment 8-39
8.2.2.2 Group IB: Flow paths closed inside containment and connected directly to the outside environment 8-43
8.2.2.3 Group IC: Flow paths connected directly to the containment atmosphere and closed outside containment 8-53
8.2.2.4 Group ID: Flow paths closed inside containment and closed outside containment 8-62
8.2.3 Class II: Penetration Flow Paths Connected to the RCS 8-64
8.2.3.1 Group IIA: Standby system flow paths 8-94
8.2.3.2 Group IIB: Normally operating system flow paths 8-109

TABLE OF CONTENTS (cont.)

8.2.4 Class III: Penetration Flow Paths Connected to the SGs 8-119
8.2.4.1 Group IIIA: Flow paths connected to the SG secondary side and open to the outside environment 8-125
8.2.4.2 Group IIIB: Flow paths connected to the SG secondary side and closed to the outside environment 8-131
8.3 DETERMINISTIC EVALUATION OF CONTAINMENT HOLE SIZE 8-135
8.4 TIER 2: AVOIDANCE OF RISK-SIGNIFICANT PLANT CONDITIONS 8-135
8.5 TIER 3: RISK-INFORMED PLANT CONFIGURATION CONTROL AND MANAGEMENT 8-136

9 LEAD PLANT APPLICATION OF THE GENERIC ANALYSIS 9-1

9.1 IMPLEMENTATION PROCEDURE 9-1
9.2 RESULTS 9-4

10 PLANT SPECIFIC ANALYSIS 10-1

10.1 CALCULATIONS 10-1
10.2 RESULTS 10-21

11 CONCLUSIONS 11-1

12 REFERENCES 12-1

APPENDIX A TSTF-446, REV. 1, "RISK-INFORMED EVALUATION OF EXTENSIONS TO CONTAINMENT ISOLATION VALVE COMPLETION TIMES (WCAP-15791, REV. 2)" A-1

APPENDIX B EXAMPLE WESSAGE FAULT TREES AND OUTPUT FILES B-1

APPENDIX C WCGS CIVS – USAR, FIGURE 6.2.4-1 ..... C-1

APPENDIX D TECHNICAL SPECIFICATION CATEGORY IDENTIFICATION D-1

APPENDIX E NRC/PWROG CORRESPONDENCE E-1

LIST OF TABLES

Table 8-1 Input Parameters 8-5

Table 8-2 Generic Summary: Class 1 – Penetration Flow Paths Connected to Containment Atmosphere 8-9

Table 8-3 Generic Summary: Class II – Penetration Flow Paths Connected to the RCS 8-68

Table 8-4 Generic Summary: Class III – Penetration Flow Paths Connected to the SGs 8-121

Table 8-5 Containment Hole Size Results 8-135

Table 9-1a Core Damage Frequency Inputs 9-3

Table 9-1b Valve Failure Probabilities, Pftc, (per demand) 9-3

Table 9-1c Beta and Gamma Factors 9-3

Table 9-1d Additional Inputs 9-4

Table 9-2 WCGS Containment Isolation Valve CT Results – Application of Generic Analysis 9-5

Table 9-3 Cumulative Percentages of CIV Completion Time Extensions Application of the Generic Results to the Wolf Creek Generating Station 9-4

Table 10-1 Re-Calculated Completion Times for the Plant Specific Analysis (only for the CIVs with a CT less than 168 hrs from the application of the generic results) 10-3

Table 10-2 Cumulative Percentages of CIV Completion Time Extensions Generic Results vs. Plant Specific Results as Applied to the Wolf Creek Generating Station 10-21

LIST OF FIGURES

Figure 8-1 Closed System Inside and Outside Containment 8-66

LIST OF ACRONYMS

AOT	Allowed Outage Time
AOV	Air-Operated Valve
CDF	Core Damage Frequency
CCF	Common Cause Failure
CCP	Centrifugal Charging Pump
CIV	Containment Isolation Valve
CT	Completion Time
DBA	Design Basis Accident
IC	Inside Containment
ICLERP	Incremental Conditional Large Early Release Probability
LCO	Limiting Condition for Operation
LERF	Large Early Release Frequency
LOCA	Loss of Coolant Accident
MOV	Motor-Operated Valve
NRC	Nuclear Regulatory Commission
OC	Outside Containment
PRA	Probabilistic Risk Analysis
PWROG	Pressurized Water Reactor Owners Group
RCS	Reactor Coolant System
RG	Regulatory Guide
RHR	Residual Heat Removal
RI	Risk-Informed
SG	Steam Generator
SI	Safety Injection
SOV	Solenoid-Operated Valves
SRV	Safety Relief Valve
WCGS	Wolf Creek Generating Station

IDENTIFICATION OF REVISIONS

This WCAP revision is required to address two issues that were identified from the NRC's review of the document. The NRC provided RAIs to the WOG via the NRC letter from D. Holland (NRC) to G. Bischoff (Westinghouse), "Request for Additional Information – WCAP-15791-P, 'Risk-Informed Evaluation of Extensions to Containment Isolation Valve Completion Times'", (TAC No. MB5751), dated July 3, 2003. The two issues were identified in RAI 2 and RAI 11.

RAI 2: The topical report (TR) references a deterministic evaluation approach to determine the minimum penetration size that will result in a large release from containment atmosphere. The TR concludes that penetration pipe size diameters of 5″, 6″, and 3″ can be screened out for sub-atmospheric, ice condenser, and dry ambient containment types. This result seems counter-intuitive since for the same volumetric leak rate (%/day) a smaller containment should have a similar hole size. Also, these sizes are significantly larger that the 1″ and 2″ diameter line size criteria typically used in the methodologies to identify penetrations whose failures could result in a large early release.

Please provide the following:

2.a An assessment of the impact of a line size screening criteria similar to the containment penetration screening criteria used in a typical probabilistic risk assessment (PRA) (e.g., a 2″ line diameter). This should include an estimate of the number and types of lines in the size range between 2″ and 6″.

2.b Provide the details of the calculations performed to determine the pipe size screening criteria for one of the containment types. Explain how choked flow considerations are accounted for in the calculation.

2.c If a PRA-type screening criteria is not adopted, please provide the results of offsite consequence calculations demonstrating that early health effects would not occur given a severe accident with containment breach sizes equivalent to the screening criteria proposed in the TR.

The following was provided in response to RAIs 2.b and 2.c.

> "Following several detailed discussions with the Staff's reviewers of this WCAP on offsite consequences associated with containment hole sizes, the WOG decided to default to a 2 inch hole size limitation to define the threshold for a large release, instead of further pursuing a hole size based on an alternate large release criteria. The 2 inch hole size has been used for screening in development of containment isolation PRA models and is acceptable to the NRC. Due to this change in the approach to set the minimum penetration size that will result in a large release, a detailed response will not be provided to this RAI. However, as a result of the large release criteria change, the impacted CIVs will be re-analyzed via the probabilistic approach with the results provided in a revision to WCAP-15791."

RAI 11: CDF_T is stated to include internal events only. Please discuss considerations for external events including CDF_T and LERF. See Table 8.1 of the TR.

The following was provided as part of the response to this RAI.

> "The analysis included the total CDF (CDF_T) from internal events. In addition, to analyze systems that are closed inside or outside containment, the analysis considered the CDF from seismic events as discussed in Section 8.2.2 of the WCAP. For the generic analysis, the CDF_T is 7.8E-05/yr. To ensure the CDF_T adequately covers both internal and external events, this value will be increased to 1E-04/yr. The generic probabilistic risk analysis will be re-done using a CDF_T value of 1E-04/yr. The new Completion Times will be provided in a revision to the WCAP."

> "With regard to the plant specific analysis for WCGS, only the internal event CDF value was used for CDF_T. The plant specific probabilistic risk analysis for the CIVs greater than 2 inches will be re-done using a CDF_T of 1E-04/yr. The new Completion Times will be provided in a revision to the WCAP."

The following provides a summary of the revisions to the WCAP to address these changes.

Revision	Location	Description
0	NA	Original Issue
1	Table 8-1	The input parameter "Internal event core damage frequency" was changed to "At-power internal & external event core damage frequency". The value 7.80E-05 was changed to 1.0E-04. In the Reference column, the comment "See note 6" was added.
1	Section 8.2.1	Note 6 was added.
1	Section 8.2.2.1	The calculations and results were changed to reflect the change in CDF_T from 7.8E-05/yr to 1.0E-04/yr.
1	Section 8.2.2.2	The calculations and results were changed to reflect the change in CDF_T from 7.8E-05/yr to 1.0E-04/yr.
1	Section 8.2.2.3	The calculations and results were changed to reflect the change in CDF_T from 7.8E-05/yr to 1.0E-04/yr.
1	Section 8.2.2.4	The calculations and results were changed to reflect the change in CDF_T from 7.8E-05/yr to 1.0E-04/yr.
1	Section 8.2.3.1	The calculations and results were changed to reflect the change in CDF_T from 7.8E-05/yr to 1.0E-04/yr.
1	Section 8.2.3.2	The calculations and results were changed to reflect the change in CDF_T from 7.8E-05/yr to 1.0E-04/yr.
1	Section 8.2.4.1	The calculations and results were changed to reflect the change in CDF_T from 7.8E-05/yr to 1.0E-04/yr.
1	Section 8.2.4.2	The calculations and results were changed to reflect the change in CDF_T from 7.8E-05/yr to 1.0E-04/yr.

Revision	Location	Description
1	Section 8.3	Revised to address the change in approach to determine the containment hole size that will result in a large release.
1	Section 8.3.1	Deleted this section
1	Table 8-5	Deleted this table
1	Section 8.3.2	Deleted this section
1	Table 8-6	Re-numbered Table 8-6 to Table 8-5
1	Section 9	Several minor editorial changes to reflect the new approach to the containment hole size that will result in a large release.
1	Section 9.1	Revised Step 4 to reflect the new approach to the containment hole size that will result in a large release.
1	Table 9-1a	The generic analysis core damage frequency value of 7.80E-05 was changed to 1.0E-04.
1	Table 9-1d	Deleted this table
1	Table 9-1e	Re-numbered to Table 9-1e to Table 9-1d
1	Section 9.2	Text revised to reflect the revised results.
1	Table 9-3	Percentage of CIVs updated to reflect revised results.
1	Table 9-2	Revised the appropriate "Grouping Explanations" and CTs to reflect the revised analysis.
1	Figure 9-1	Replaced Figure 9-1 with Table 9-3 that provides a summary of the revised results.
1	Section 10	Revised the text to reflect the new approach to the containment hole size that will result in a large release.
1	Section 10.1	Deleted the first two paragraphs that discussed calculating a plant specific containment hole size that will result in a large release.
1	Table 10-1	Revised Table 10-1 to reflect the results of the revised plant specific analysis. The table also has a revised form.
1	Section 10.2	Updated the summary of results (percentage CIVs with an increased CT).
1	Table 10-2	Percentage of CIVs updated to reflect revised results.
1	Figure 10-1	Replaced Figure 10-1 with Table 10-2 that provides a summary of the revised results.
1	Section 11	Revised the first bullet to reflect the new approach to the containment hole size that will result in a large release. Updated the fourth and fifth bullets with revised results (percentage CIVs with an increased CT).
1	Appendix A	Removed Marked up Technical Specifications and Bases. Added TSTF-446, Rev. 1
1	Appendix D	Updated the "Completion Time (CT) Category Number" and the "Justified CT" information to reflect the revised analysis and results.
1	Appendix E	Deleted this Appendix (provides similar information as Appendix D)

The following documents the revisions made to the WCAP to 1) update front matter and 2) address several issues with the initial Safety Evaluation provided by the NRC.

Revision	Location	Description
2	Title Page	Updated the title page.
2	Legal Notice	Updated the Legal Notice.
2	Copyright Notice	Updated the Copyright Notice.
2	Distribution Notice	Added the Distribution Notice.
2	Member Participation Table	Added the Member Participation Table.
2	Table of Contents	Updated the Table of Contents to reflect the changes in the body of the WCAP.
2	List of Tables	Updated the List of Tables to reflect the changes in the body of the WCAP.
2	List of Acronyms	Updated the List of Acronyms.
2	Executive Summary	Made appropriate changes to reflect the change from the "Westinghouse Owners Group" to the "Pressurized Water Reactors Owners Group."
2	Section 1	Made appropriate changes to reflect the change from the "Westinghouse Owners Group" to the "Pressurized Water Reactors Owners Group."
2	Section 8, 8.2, 8.2.2, 8.2.3, 8.2.3.1, 8.2.4, 8.3, 9, 9.1, 10, 10.1	Made appropriate changes to discern between the basis for the analysis and assumptions in the analysis.
2	Section 8.2	After Item 8 added the words "The analysis does not take any credit for improved CIV reliability."
2	Table 8-1	Made appropriate changes to the notes to the table to discern between the basis for the analysis and assumptions in the analysis.
2	Table 8-1	Added the word "conservatively" to the last sentence ("Regardless of the CT, ...") of Note 4.
2	Table 8-2, 8-3, 8-4	Changed the fifth column heading to "Valve Type Basis (see item 7 of Section 8.2)."
2	Table 8-2, 8-3	In several places in the column labeled "Diagram" changed "n maintenance" to "in maintenance."
2	Section 8.2.2.3, 8.2.3.1	Changed "n maintenance" to "in maintenance" where necessary.
2	Section 8.4	Added discussion on Tier 2 requirement in the final paragraph.
2	Table 9-1d	Revised the title to "Additional Inputs."
2	Section 12	Revised Reference 4 to reflect the change from the "Westinghouse Owners Group" to the "Pressurized Water Reactors Owners Group."

Revision	Location	Description
2	Appendix D Table D-1, D-2, D-3	Changed the fourth column heading to "Valve Type Basis (see item 7 of Section 8.2)."
2	Appendix D Table D-1, D-2	Changed "n maintenance" to "in maintenance" where necessary.

EXECUTIVE SUMMARY

Plant Technical Specifications are issued by the U.S. NRC to ensure that safe nuclear power plant operation is maintained within the assumptions and the conditions of the plant safety analysis reports (SAR). One part of the Technical Specifications specify the Completion Times (CTs). These are the times in which remedial actions must be taken in the event that the minimum set of safety system requirements consistent with the plant SAR are not met. The Pressurized Water Reactor Owners Group (PWROG) has undertaken a number of programs focused on improving Technical Specification requirements including CTs. One program is focused on extending the CT for the containment penetration isolation valves (CIVs) from 4 hours to 7 days. The motivation for this is to provide sufficient time for plant personnel to address CIV inoperability and to perform preventive maintenance activities on the CIVs during power operation.

Containment penetration types included in this analysis are for systems that are connected to the containment atmosphere, connected to the reactor coolant system, and connected to the steam generators. Consideration is given to penetration flow paths associated with open and closed systems, for multiple CIVs, and for maintenance activities on the CIVs that inhibit the valves from functioning as a pressure boundary and for activities that allow the valves to retain their pressure boundary functionality.

The approach used in this program applies both deterministic and probabilistic evaluations. A deterministic approach is used to determine the minimum containment hole size that will result in a large release from the containment atmosphere. Penetration flow paths connected to the containment atmosphere smaller than this minimum size are allowed the 7 day CT. All other penetrations are evaluated on a probabilistic basis to demonstrate a CT of 7 days is acceptable or to determine an appropriate CT. The probabilistic evaluation is consistent with the U.S. NRC's approach for using probabilistic risk assessment in risk-informed decisions on plant-specific changes to the current licensing basis. This approach is discussed in Regulatory Guides 1.174 and 1.177. The risk measures of importance are the impact of the CT extension on large early release frequency and incremental conditional large early release probability.

This program evaluated the impact of extending the 4 hour CT on a generic basis. Conservative analysis input parameters were used to ensure the results are applicable to all Westinghouse plants. Utilities that implement these CT changes must demonstrate that the generic analysis is applicable to their plant by showing that the input parameters are representative of or conservative for their plant. A plant specific implementation of the generic analysis is provided for the Wolf Creek Generating Station (WCGS). Utilities that want to extend the CTs beyond those justified by the generic analysis can substitute plant specific values in place of the generic input parameters and recalculate the risk measures. This has also been completed for the WCGS.

The results show that a CT extension to 7 days can be justified for a majority of the CIVs for the WCGS. For those CIVs where the full 7 day extension could not be justified, many can be extended to at least 12 hours and there were only a very small number of CIVs where an extension could not be justified.

1 INTRODUCTION

The purpose of this program is to provide the technical justification for extending the Completion Time (CT), also referred to as the allowed outage time (AOT), from 4 hours to 168 hours (7 days) (for isolation valves that cannot demonstrate acceptable results for 168 hours, shorter times are considered and evaluated), for the following Technical Specification requirement:

LCO 3.6.3, Containment Isolation Valves (CIVs), NUREG 1431, Rev. 2

- Condition A, One or more penetration flow paths with one CIV inoperable (only applicable to penetration flow paths with two [or more] CIVs).
  Required Action A1: Isolate the affected penetration flow path by use of at least one closed and de-activated automatic valve, closed manual valve, blind flange, or check valve with flow through the valve secured.

- Condition C, One or more penetration flow paths with one CIV inoperable (only applicable to penetration flow paths with only one CIV and a closed system).
  Required Action C1: Isolate the affected penetration flow path by use of at least one closed and de-activated automatic valve, closed manual valve, or blind flange.

The current CTs are generally insufficient to respond to CIV inoperability and perform preventive maintenance activities at-power.

The approach used in this program applies both deterministic and probabilistic evaluations. A deterministic approach is used to determine the minimum containment hole size that will result in a large release from the containment atmosphere. Penetration flow paths connected to the containment atmosphere smaller than this size are allowed a CT of 7 days. All other penetrations are evaluated on a probabilistic basis to demonstrate that a CT of 7 days is acceptable, or to determine an appropriate CT. The probabilistic evaluation is consistent with the Nuclear Regulatory Commission's (NRC) approach for using probabilistic risk assessment (PRA) in risk-informed (RI) decisions on plant-specific changes to the current licensing basis. This approach is discussed in Regulatory Guide 1.174 ("An Approach for Using Probabilistic Risk Assessment in Risk-Informed Decisions on Plant-Specific Changes to the Licensing Basis," Reference 1) and Regulatory Guide 1.177 ("An Approach for Plant-Specific, Risk-Informed Decisionmaking: Technical Specifications," Reference 2). The approach addresses, as documented in this report, the impact on defense-in-depth and the impact on safety margins, as well as an evaluation of the impact on risk. The risk evaluation considers the three-tiered approach as presented by the NRC in Reg. Guide 1.177. Tier 1, PRA Capability and Insights, assessed the impact of the proposed Completion Time change on large early release frequency (LERF) and incremental conditional large early release probability (ICLERP). The impact of the change on core damage frequency (CDF) and incremental conditional core damage probability (ICCDP) were not evaluated since containment isolation is a function that impacts containment response to an event and not the ability of the plant design to prevent or mitigate core damage. Tier 2, Avoidance of Risk-Significant Plant Configurations, considered potential risk-significant plant operating configurations. Tier 3, Risk-Informed Plant Configuration Control and Management, will be addressed on a plant specific basis when the Technical Specification Completion Time change is implemented by each utility consistent with their Maintenance Rule program.

This program used an approach that evaluated the impact of the CT on a generic basis. Conservative analysis input parameters were used in the analysis to ensure that the results are applicable to all domestic WOG plants. Utilities that implement this CT change will need to demonstrate that the analysis is applicable to their plant by demonstrating that the input parameters are representative of, or conservative for their plant. A plant specific implementation of the generic analysis is provided for the Wolf Creek Generating Station (WCGS) in Section 9. Utilities can substitute plant specific values in place of the generic input parameters and recalculate the risk measures that in some cases will result in longer CTs. This is provided for WCGS in Section 10.

Penetration types included in this analysis are systems that connect directly to the containment atmosphere, connect directly to the reactor coolant system (RCS), and connect directly to the steam generators (SGs). Consideration is given to penetration flow paths with multiple isolation valves and penetration flow paths with single isolation valves with a closed system. Consideration is also given to maintenance activities on the isolation valves that inhibit the CIVs from functioning as a pressure boundary and also activities that allow the CIVs to retain their pressure boundary functionality.

The Technical Specification conditions will be eliminated that distinguish between penetration flow paths that contain two or more CIVs and penetration flow paths that contain one CIV and a closed system. Also, two conditions will be added to address maintenance activities that impact the CIV pressure boundary; one when the pressure boundary is intact and one when it is not intact.
See Appendix A: Marked up Technical Specifications and Bases.

The PWROG is evaluating these changes as part of a larger program considering changes to a number of Technical Specification CTs for Westinghouse plants. CT extensions are also being considered for a number of fluid systems, and AC and DC power systems.

2 TECHNICAL SPECIFICATIONS

The relevant Technical Specifications for the containment isolation valves from NUREG-1431, Rev. 2 (Improved Standard Technical Specifications) for Westinghouse plants follow.

3.6 CONTAINMENT SYSTEMS

3.6.3 Containment Isolation Valves (Atmospheric, Subatmospheric, Ice Condenser, and Dual)

LCO 3.6.3 Each containment isolation valve shall be OPERABLE.

APPLICABILITY: MODES 1, 2, 3, and 4.

ACTIONS

- NOTES -

1. Penetration flow path(s) [except for [42] inch purge valve flow paths] may be unisolated intermittently under administrative controls.

2. Separate Condition entry is allowed for each penetration flow path.

3. Enter applicable Conditions and Required Actions for systems made inoperable by containment isolation valves.

4. Enter applicable Conditions and Required Actions of LCO 3.6.1, "Containment," when isolation valve leakage results in exceeding the overall containment leakage rate acceptance criteria.

CONDITION	REQUIRED ACTION	COMPLETION TIME
A. - NOTE - Only applicable to penetration flow paths with two [or more] containment isolation valves. One or more penetration flow paths with one containment isolation valve inoperable [for reasons other than Condition[s] D [and E]].	A.1 Isolate the affected penetration flow path by use of at least one closed and de-activated automatic valve, closed manual valve, blind flange, or check valve with flow through the valve secured. AND	4 hours

ACTIONS (continued)

CONDITION	REQUIRED ACTION	COMPLETION TIME
	A.2 ---------- **- NOTES -** 1. Isolation devices in high radiation areas may be verified by use of administrative means. 2. Isolation devices that are locked, sealed, or otherwise secured may be verified by use of administrative means. ---------- Verify the affected penetration flow path is isolated.	Once per 31 days for isolation devices outside containment <u>AND</u> Prior to entering MODE 4 from MODE 5 if not performed within the previous 92 days for isolation devices inside containment

ACTIONS (continued)

CONDITION	REQUIRED ACTION	COMPLETION TIME
B. ---------- **- NOTE -** Only applicable to penetration flow paths with two [or more] containment isolation valves. ---------- One or more penetration flow paths with two [or more] containment isolation valves inoperable [for reasons other than Condition[s] D [and E]].	B.1 Isolate the affected penetration flow path by use of at least one closed and de-activated automatic valve, closed manual valve, or blind flange.	1 hour
C. ---------- **- NOTE -** Only applicable to penetration flow paths with only one containment isolation valve and a closed system. ---------- One or more penetration flow paths with one containment isolation valve inoperable.	C.1 Isolate the affected penetration flow path by use of at least one closed and de-activated automatic valve, closed manual valve, or blind flange. AND	72 hours

ACTIONS (continued)

CONDITION	REQUIRED ACTION		COMPLETION TIME
	C.2	---------- **- NOTES -** 1. Isolation devices in high radiation areas may be verified by use of administrative means. 2. Isolation devices that are locked, sealed, or otherwise secured may be verified by use of administrative means. ---------- Verify the affected penetration flow path is isolated.	Once per 31 days
D. [One or more shield building bypass leakage [or purge valve leakage] not within limit.	D.1	Restore leakage within limit.	4 hours for shield building bypass leakage AND 24 hours for purge valve leakage]
E. [One or more penetration flow paths with one or more containment purge valves not within purge valve leakage limits.	E.1 AND	Isolate the affected penetration flow path by use of at least one [closed and de-activated automatic valve, closed manual valve, or blind flange].	24 hours

BASES

ACTIONS (continued)

The ACTIONS are further modified by a third Note, which ensures appropriate remedial actions are taken, if necessary, if the affected systems are rendered inoperable by an inoperable containment isolation valve.

In the event the isolation valve leakage results in exceeding the overall containment leakage rate, Note 4 directs entry into the applicable Conditions and Required Actions of LCO 3.6.1.

A.1 and A.2

In the event one containment isolation valve in one or more penetration flow paths is inoperable, [except for purge valve or shield building bypass leakage not within limit], the affected penetration flow path must be isolated. The method of isolation must include the use of at least one isolation barrier that cannot be adversely affected by a single active failure. Isolation barriers that meet this criterion are a closed and de-activated automatic containment isolation valve, a closed manual valve, a blind flange, and a check valve with flow through the valve secured. For a penetration flow path isolated in accordance with Required Action A.1, the device used to isolate the penetration should be the closest available one to containment. Required Action A.1 must be completed within 4 hours. The 4 hour Completion Time is reasonable, considering the time required to isolate the penetration and the relative importance of supporting containment OPERABILITY during MODES 1, 2, 3, and 4.

For affected penetration flow paths that cannot be restored to OPERABLE status within the 4 hour Completion Time and that have been isolated in accordance with Required Action A.1, the affected penetration flow paths must be verified to be isolated on a periodic basis. This is necessary to ensure that containment penetrations required to be isolated following an accident and no longer capable of being automatically isolated will be in the isolation position should an event occur. This Required Action does not require any testing or device manipulation. Rather, it involves verification, through a system walkdown, that those isolation devices outside containment and capable of being mispositioned are in the correct position. The Completion Time of "once per 31 days for isolation devices outside containment" is appropriate considering the fact that the devices are operated under administrative controls and the probability of their misalignment is low. For the isolation devices inside containment, the time period specified as "prior to entering MODE 4 from MODE 5 if not performed within the

BASES

ACTIONS (continued)

previous 92 days" is based on engineering judgment and is considered reasonable in view of the inaccessibility of the isolation devices and other administrative controls that will ensure that isolation device misalignment is an unlikely possibility.

Condition A has been modified by a Note indicating that this Condition is only applicable to those penetration flow paths with two [or more] containment isolation valves. For penetration flow paths with only one containment isolation valve and a closed system, Condition C provides the appropriate actions.

Required Action A.2 is modified by two Notes. Note 1 applies to isolation devices located in high radiation areas and allows these devices to be verified closed by use of administrative means. Allowing verification by administrative means is considered acceptable, since access to these areas is typically restricted. Note 2 applies to isolation devices that are locked, sealed, or otherwise secured in position and allows these devices to be verified closed by use of administrative means. Allowing verification by administrative means is considered acceptable, since the function of locking, sealing, or securing components is to ensure that these devices are not inadvertently repositioned. Therefore, the probability of misalignment of these devices once they have been verified to be in the proper position, is small.

B.1

With two [or more] containment isolation valves in one or more penetration flow paths inoperable, [except for purge valve or shield building bypass leakage not within limit,] the affected penetration flow path must be isolated within 1 hour. The method of isolation must include the use of at least one isolation barrier that cannot be adversely affected by a single active failure. Isolation barriers that meet this criterion are a closed and de-activated automatic valve, a closed manual valve, and a blind flange. The 1 hour Completion Time is consistent with the ACTIONS of LCO 3.6.1. In the event the affected penetration is isolated in accordance with Required Action B.1, the affected penetration must be verified to be isolated on a periodic basis per Required Action A.2, which remains in effect. This periodic verification is necessary to assure leak tightness of containment and that penetrations requiring isolation following an accident are isolated. The Completion Time of once per 31 days for verifying each affected penetration flow path is isolated is appropriate considering the fact that the valves are operated under administrative control and the probability of their misalignment is low.

BASES

ACTIONS (continued)

Condition B is modified by a Note indicating this Condition is only applicable to penetration flow paths with two [or more] containment isolation valves. Condition A of this LCO addresses the condition of one containment isolation valve inoperable in this type of penetration flow path.

C.1 and C.2

With one or more penetration flow paths with one containment isolation valve inoperable, the inoperable valve flow path must be restored to OPERABLE status or the affected penetration flow path must be isolated. The method of isolation must include the use of at least one isolation barrier that cannot be adversely affected by a single active failure. Isolation barriers that meet this criterion are a closed and de-activated automatic valve, a closed manual valve, and a blind flange. A check valve may not be used to isolate the affected penetration flow path. Required Action C.1 must be completed within the 72 hour Completion Time. The specified time period is reasonable considering the relative stability of the closed system (hence, reliability) to act as a penetration isolation boundary and the relative importance of maintaining containment integrity during MODES 1, 2, 3, and 4. In the event the affected penetration flow path is isolated in accordance with Required Action C.1, the affected penetration flow path must be verified to be isolated on a periodic basis. This periodic verification is necessary to assure leak tightness of containment and that containment penetrations requiring isolation following an accident are isolated. The Completion Time of once per 31 days for verifying that each affected penetration flow path is isolated is appropriate because the valves are operated under administrative controls and the probability of their misalignment is low.

Condition C is modified by a Note indicating that this Condition is only applicable to those penetration flow paths with only one containment isolation valve and a closed system. The closed system must meet the requirements of Ref. 3. This Note is necessary since this Condition is written to specifically address those penetration flow paths in a closed system.

Required Action C.2 is modified by two Notes. Note 1 applies to valves and blind flanges located in high radiation areas and allows these devices to be verified closed by use of administrative means. Allowing verification by administrative means is considered acceptable, since access to these areas is typically restricted. Note 2 applies to isolation devices that are locked, sealed, or otherwise secured in position and allows these devices

BASES

ACTIONS (continued)

to be verified closed by use of administrative means. Allowing verification by administrative means is considered acceptable, since the function of locking, sealing, or securing components is to ensure that these devices are not inadvertently repositioned. Therefore, the probability of misalignment of these valves, once they have been verified to be in the proper position, is small.

[D.1

With the shield building bypass leakage rate (SR 3.6.3.11) [or purge valve leakage rate (SR 3.6.3.7)] not within limit, the assumptions of the safety analyses are not met. Therefore, the leakage must be restored to within limit. Restoration can be accomplished by isolating the penetration(s) that caused the limit to be exceeded by use of one closed and de-activated automatic valve, closed manual valve, or blind flange. When a penetration is isolated the leakage rate for the isolated penetration is assumed to be the actual pathway leakage through the isolation device. If two isolation devices are used to isolate the penetration, the leakage rate is assumed to be the lesser actual pathway leakage of the two devices. The 4 hour Completion Time for shield building bypass leakage is reasonable considering the time required to restore the leakage by isolating the penetration(s) and the relative importance of secondary containment bypass leakage to the overall containment function. [The 24 hour Completion time for purge valve leakage is acceptable considering the purge valves remain closed so that a gross breach of the containment does not exist.]

- REVIEWER'S NOTE -

[The bracketed options provided in ACTION D reflect options in plant design and options in adopting the associated leakage rate Surveillances.

The options (in both ACTION D and ACTION E) for purge valve leakage, are based primarily on the design - if leakage rates can be measured separately for each purge valve, ACTION E is intended to apply. This would be required to be able to implement Required Action E.3. Should the design allow only for leak testing both purge valves simultaneously, then the Completion Time for ACTION D should include the "24 hours for purge valve leakage" and ACTION E should be eliminated.]]

---

3 NEED FOR COMPLETION TIME CHANGE

As discussed in Regulatory Guide 1.177 acceptable reasons for requesting Technical Specification changes fall into one or more of the following categories:

Improvement to operational safety: A change to the Tech Specs can be made due to reductions in the plant risk or a reduction in the occupational exposure of plant personnel in complying with the Tech Spec requirements.

Consistency with risk basis in regulatory requirements: Tech Spec requirements can be changed to reflect improved design features in a plant or to reflect equipment reliability improvements that make a previous requirement unnecessarily stringent or ineffective. Tech Specs may be changed to establish consistently based requirements across the industry or across an industry group.

Reduce unnecessary burdens: The change may be requested to reduce unnecessary burdens in complying with current Tech Spec requirements, based on operating history of the plant or the industry in general. This includes extending completion times: 1) that are too short to complete repairs when components fail with the plant at-power, 2) to complete additional maintenance activities at-power to reduce plant down time, and 3) provide increased flexibility to plant operators.

The CT extensions in this WCAP are requested primarily to provide an improvement to operational safety, reduce unnecessary burden and provide a more consistent risk basis in regulatory requirements. In addition, the assumption that shutting the plant down is the safest course of action is not always valid and depending on the component or system of interest, it may be safer to complete component repairs at power. During shutdown, the transfer from auxiliary feedwater (AFW) to the residual heat removal (RHR) system represents an increased risk level due to system alignment changes that could lead to loss of inventory events. This transition can be avoided by completing the repair at-power. Potential risks associated with plant shutdown need to be considered when determining an appropriate course of action. Extended CTs enable this shutdown risk to be averted.

With regard to the regulatory basis consistency, CIVs are typically not as risk significant as many other plant safety systems and components. Often these other systems more important to risk have CTs that are longer than the CTs for CIVs. Shorter CTs should be imposed on systems or components that are considered to be highly risk significant. Containment penetrations do not rely on single valves to perform their isolation function, but are designed with multiple isolation valves or involve a closed system. A four hour CT is too restrictive and potentially forces plant operators to focus on CIV inoperability ahead of other inoperabilities that may be more risk significant, but have longer CTs.

There are situations where a potential plant shutdown or a plant transient can be avoided, if sufficient time was available to perform corrective maintenance on an inoperable CIV. The following examples demonstrate that the current 4 hour CIV CT is insufficient to perform corrective maintenance on an inoperable CIV.

A plant was performing a quarterly surveillance test that involved stroking a Component Cooling Water CIV. This CIV is located in a common loop that provides cooling to essential containment loads such as the RCP motor air coolers, the RCP upper and lower bearing cooler, and the excess letdown heat

exchanger. During the performance of the test, the Component Cooling Water CIV was taken to the closed position and failed to fully close. The valve was declared inoperable, and TS 3.6.3 Required Action A.1 was entered with a 4 hour CT to either a) restore the valve to Operable status, b) isolate the affected penetration flow path, or c) initiate a plant shutdown. The troubleshooting of the problem involved a containment entry to visually inspect the torque switch and wiring. During the troubleshooting of the torque switch and wiring, the valve was taken to the open position and then to the closed position. This time, the valve fully closed. The closure of the Component Cooling Water CIV was completed with just 9 minutes remaining on the Required Action A.1 Completion Time of 4 hours. Troubleshooting and repair of the valve continued, and the valve was restored to Operable status in an additional 28 hours. A plant shutdown was not required, however, isolating the penetration flow path within the required 4 hours could have resulted in an unnecessary plant transient. The current 4 hour CT was barely enough time to perform the initial troubleshooting of the problem, and was insufficient to complete the repair, which took another 28 hours.

Some of the sample line relief valves may open, and remain opened during plant sampling operations. The flow path can be isolated with the current CT of 4 hours, however the relief valve cannot be repaired within the 4 hour CT. If a plant conservatively chooses not to utilize the Note in TS 3.6.3 that allows penetration flow paths to be unisolated intermittently under administrative controls, the valve will remain closed for the entire cycle, until it can be repaired during an outage. An entry into containment may be required to obtain plant samples locally. The containment entry involves additional dose to the plant personnel obtaining the sample, and a personnel hazard in obtaining the sample from a high-pressure source. If a longer CT were available, then the valve could be repaired, allowing samples to be obtained from the sampling panel.

A plant performs a local leak rate test (LLRT) on the containment purge valves every six months. Both valves are tested at the same time due to the configuration of the valves. If the LLRT is failed, both valves are assumed to fail, since there is no way to determine which valve failed. A large blind flange would be used to isolate the penetration, since there is no other way to isolate the penetration. A 4 hour CT is not sufficient to install and test the blind flange, and therefore a plant shutdown would be required. A longer CT would allow the blind flange to be installed and tested.

Another example where the current 4 hour CT was insufficient to perform a repair was associated with a leaking feedwater header vent and drain valve. The repair of the leaking valve involved capping the end of the pipe. The evaluation of the repair involved determining the pressure rating of the piping, to determine the pressure rating of the cap to be installed. The end of the pipe had to be modified to install the cap. The current CT of 4 hours was not enough time to perform the design evaluation and to perform the repair.

4 TECHNICAL SPECIFICATION CHANGE REQUEST

The analysis in this report provides the justification for extending the Completion Times of Tech Spec 3.6.3 in NUREG-1431, Rev. 2 for the Required Actions associated with the following conditions:

- Condition A, One or more penetration flow paths with one containment isolation valve inoperable [for reasons other that Condition[s] D [and E]].

- Required Action A.1, Isolate the affected penetration flow path by use of at least one closed and de-activated automatic valve, closed manual valve, blind flange, or check valve with flow through the valve secured.

  Evaluate increasing the CT from 4 hours to 7 days.

- Condition C, One or more penetration flow paths with one containment isolation valve inoperable.

- Required Action C.1, Isolate the affected penetration flow path by use of at least one closed and de-activated automatic valve, closed manual valve, or blind flange.

  Evaluate increasing the CT from 72 hours to 7 days.

Note that a CT extension to 7 days is the objective of this analysis for both conditions A and C. CTs less than 7 days will be proposed if necessary to meet the risk acceptance criteria provided in Regulatory Guides 1.174 and 1.177.

5 DESIGN BASIS REQUIREMENTS AND IMPACT

The following discusses the design basis requirements and the impact of the proposed CT extensions on these requirements. This discussion is taken from the basis of Tech Spec 3.6.3 in NUREG-1431, Rev. 2, (Reference 3).

The CIVs form part of the containment pressure boundary and provide a means for fluid penetrations not serving accident consequence limiting systems to be provided with two isolation barriers that are closed on a containment isolation signal. The isolation devices are either passive or active (automatic). Manual valves, de-activated automatic valves secured in their closed position (including check valves with flow through the valve secured), blind flanges, and closed systems are considered passive devices. Check valves, or other automatic valves designed to close without operator action following an accident, are considered active devices. Two barriers in series are provided for each penetration so that no single credible failure or malfunction of an active component can result in a loss of isolation or leakage that exceeds limits assumed in the safety analyses. One of these barriers may be a closed system. These barriers (typically containment isolation valves) make up the Containment Isolation System.

Automatic isolation signals are produced during accident conditions. Containment Phase "A" isolation occurs upon receipt of a safety injection signal. Phase "A" isolation signal isolates nonessential process lines in order to minimize leakage of fission product radioactivity. Containment Phase "B" isolation occurs upon receipt of a containment pressure High-High signal and isolates the remaining process lines, except systems required for accident mitigation. In addition to the isolation signals listed above, the purge and exhaust valves receive an isolation signal on a containment high radiation condition. As a result, the containment isolation valves (and blind flanges) help ensure that the containment atmosphere will be isolated from the environment in the event of a release of fission product radioactivity to the containment atmosphere as a result of a Design Basis Accident (DBA).

The OPERABILITY requirements for containment isolation valves help ensure that containment is isolated within the time limits assumed in the safety analysis. Therefore, the OPERABILITY requirements provide assurance that the containment function assumed in the safety analysis will be maintained.

The containment isolation valve Limiting Condition for Operation (LCO) was derived from the assumptions related to minimizing the loss of reactor coolant inventory and establishing the containment boundary during major accidents. As part of the containment boundary, containment isolation valve OPERABILITY supports leak tightness of the containment. Therefore, the safety analysis of any event requiring isolation of containment is applicable to this LCO.

The DBAs that result in a release of radioactive material within containment are a loss of coolant accident and a rod ejection accident. In the analysis for each of these accidents, it is assumed that containment isolation valves are either closed or function to close within the required isolation time following event initiation. This ensures that potential paths to the environment through containment isolation valves are minimized.

The normally closed isolation valves are considered OPERABLE when manual valves are closed, automatic valves are de-activated and secured in their closed position, blind flanges are in place, and closed systems are intact.

Required Action A.1 This action requires that with one CIV in one or more penetration flow paths inoperable [except for purge valve or shield building bypass leakage not within limit], the affected penetration flow path must be isolated. The method of isolation must include the use of at least one isolation barrier that cannot be adversely affected by a single active failure. Isolation barriers that meet this criterion are a closed and de-activated automatic CIV, a closed manual valve, a blind flange, and a check valve with flow through the valve secured.

Required Action C.1 This action requires that with one or more penetration flow paths with one CIV inoperable, the inoperable valve flow path must be restored to OPERABLE status or the affected penetration flow path must be isolated. The method of isolation must include the use of at least one isolation barrier that cannot be adversely affected by a single active failure. Isolation barriers that meet this criterion are a closed and de-activated automatic valve, a closed manual valve, and a blind flange. A check valve may not be used to isolate the affected penetration flow path. Condition C is modified by a Note indicating that this Condition is only applicable to those penetration flow paths with only one containment isolation valve and a closed system.

Completion Time Increase Impact on Design Basis Requirements

This CT change does not impact the design basis requirements of the containment isolation system. The design of the containment isolation valves is not impacted by this change. The design will continue to provide sufficient capability, redundancy, and reliability to ensure the containment is isolated when required and design basis radioactive release limits are not exceeded. The operability of the containment isolation system will remain consistent with the assumptions of the safety analysis.

6 SYSTEM DESCRIPTION

The CIVs are used to isolate containment penetration flow paths. Typically there is one CIV inside and one CIV outside each penetration that performs this function. Depending on the purpose of the system, the CIVs may be normally open or closed. Systems can be closed or open inside and outside of containment. An open system inside containment is one that is directly connected to the containment atmosphere. An open system outside containment is one that is directly connected to the outside environment. A closed system inside containment is one that is not directly connected to the containment atmosphere and may consist of only a run of pipe inside containment. A closed system outside containment has no direct connection to the outside environment. Closed systems, either inside or outside containment, may not have an associated CIV.

There are a number of different types of penetration configurations depending on the system of interest. Details of these penetrations are provided in Section 8 along with the analysis for each penetration. In general, the following penetration types are evaluated in this analysis. The grouping nomenclature used in this analysis is also provided.

Class I: Penetrations with flow paths to the containment atmosphere

- Group IA: Flow paths connected directly to the containment atmosphere and the outside environment (open/open penetration type)
- Group IB: Flow paths closed inside containment and connected directly to the outside environment (closed/open penetration type)
- Group IC: Flow paths connected directly to the containment atmosphere and closed outside containment (open/closed penetration type)
- Group ID: Flow paths closed inside containment and closed outside containment (closed/closed penetration type)

Class II: Penetrations with flow paths to the RCS

- Group IIA: Standby flow paths
- Group IIB: Normally operating flow paths

Class III: Penetrations with flow paths to the SGs

- Group IIIA: Flow paths connected to the SG secondary side and open to the outside environment
- Group IIIB: Flow paths connected to the SG secondary side and closed to the outside environment

7 IMPACT ON DEFENSE-IN-DEPTH AND SAFETY MARGINS

In addition to discussing the impact of the changes on plant risk, as presented in Section 8, the traditional engineering considerations need to be addressed. These include defense-in-depth and safety margins. The fundamental safety principles on which the plant design is based cannot be compromised. Design basis accidents are used to develop the plant design. These are a combination of postulated challenges and failure events that are used in the plant design to demonstrate safe plant response. Defense-in-depth, the single failure criterion, and adequate safety margins may be impacted by the proposed change and consideration needs to be given to these elements.

7.1 IMPACT ON DEFENSE-IN-DEPTH

The proposed change needs to meet the defense-in-depth principle which consists of a number of elements. These elements and the impact of the proposed change on each follow:

- A reasonable balance among prevention of core damage, prevention of containment failure, and consequence mitigation is preserved.

  The CIVs are part of the plant design to primarily ensure containment integrity following an accident. By closing the CIVs, inventory required to cool the core is also maintained. The CIVs are not included in the plant design for consequence mitigation. Therefore, the proposed CT change for the CIVs has a negligible impact on CDF, no direct impact on consequence mitigation, and only a small impact on LERF as discussed in Section 8. This change does not significantly degrade the ability of one barrier to fission product release and compensate with an improvement of another. The balance between prevention of core damage and prevention of containment failure and consequence mitigation is maintained. Furthermore, no new accident or transients are introduced with the requested change and the likelihood of an accident or transient is not impacted.

- Over-reliance on programmatic activities to compensate for weaknesses in plant design.

  The plant design will not be modified with this proposed change. All safety systems, including the CIVs, will still function in the same manner with the same reliability, and there will be no additional reliance on additional systems, procedures, or operator actions. The calculated risk increase for the CT changes is very small and additional control processes are not required to be put into place to compensate for any risk increase.

- System redundancy, independence, and diversity are maintained commensurate with the expected frequency and consequences of challenges to the system.

  There is no impact on the redundancy, independence, or diversity of the CIVs or on the ability of the plant to isolate containment penetrations with diverse systems. The redundant and diverse containment isolation designs will not be changed. The CIVs are reliable components and will remain reliable after these proposed changes.

- Defenses against potential common cause failures are maintained and the potential for introduction of new common cause failure mechanisms is assessed.

  Defenses against common cause failures are maintained. The completion time extensions requested are not significantly increased such that any new common cause failure mechanisms would occur. In addition, the operating environment for these components remains the same, therefore, new common cause failures modes are not expected. The number, design, and types of valves used for containment isolation remain the same with these changes so the containment isolation system maintains the potential against common cause failures.

- Independence of barriers is not degraded.

  The barriers protecting the public and the independence of these barriers are maintained. It is not expected that multiple systems will be out of service simultaneously during the extended CTs that could lead to degradation of these barriers, and an increase in risk to the public. In addition, the extended CTs do not provide a mechanism that degrades the independence of the barriers; fuel cladding, reactor coolant system, and containment.

- Defenses against human errors are maintained.

  No new operator actions related to the CT extensions are required to maintain plant safety. No changes to current operating, maintenance, or test procedures are required due to these changes. The increase in CTs provides additional time to complete troubleshooting, and test and repair activities which will lead to improved operator and maintenance personnel performance, resulting in reduced system re-alignment and restoration errors.

7.2 IMPACT ON SAFETY MARGINS

The safety analysis acceptance criteria as stated in the FSAR are not impacted by this change. Redundant and diverse, containment isolation valves, where applicable, and closed systems will be maintained. The proposed changes will not allow plant operation in a configuration outside the design basis. Isolation of all containment penetrations will remain single failure proof. CIV operation and testing requirements and containment leakage requirements are not impacted by this change. There is no impact on safety margins.

8 GENERIC ASSESSMENT OF IMPACT ON RISK

This section presents the analysis basis and assumptions used to determine the impact on plant risk of increasing the Completion Times specified in Section 4. This section addresses the three tiered approach to the evaluation of risk-informed Technical Specification changes. The three tiered approach is defined in Regulatory Guide 1.177. The first tier, discussed in Sections 8.1 to 8.3, addresses PSA insights and includes the risk analyses to support the CT change. The second tier, which addresses avoidance of risk-significant plant configurations, is discussed in Section 8.4. The third tier, which addresses risk-informed plant configuration control and management, is covered by each utility's Maintenance Rule Program and is discussed in Section 8.5.

8.1 TIER 1: APPROACH TO THE EVALUATION

The Tier 1 analysis provides the impact of the CT changes on the ICLERP and LERF. Since the CIVs are used to maintain containment integrity, any change to their availability will directly impact releases from containment following a core damage event. The impact of these changes on CDF, and as measured by the change in CDF and ICCDP values, is not important since this impact would be a secondary effect related to a long-term loss of inventory for core cooling.

The approach used in this program applies both deterministic and probabilistic evaluations. A deterministic approach is used to determine the minimum containment hole size that will result in a large release from the containment atmosphere. Penetration flow paths connected to the containment atmosphere smaller than this size are allowed a CT of 7 days. The minimum hole size is determined for large dry, subatmospheric, and ice condenser containment types. All other penetrations are evaluated on a probabilistic basis to demonstrate if a CT of 7 days is acceptable or to determine an appropriate lesser CT. The probabilistic evaluation is consistent with the Nuclear Regulatory Commission's (NRC) approach for using PRA in RI decisions on plant-specific changes to the current licensing basis. This approach is discussed in Regulatory Guides 1.174 and 1.177.

Both the deterministic and probabilistic analyses were completed on a generic basis. Input parameters used in the analyses were picked based on the most conservative plant design or plant design parameters available, that is, the set of design parameters that results in the most conservative results (shortest CT). Application of the generic analysis on a plant specific basis requires each utility implementing this change to demonstrate that their plant is within the bounds of the analysis. This process is demonstrated for WCGS in Section 9. Plant specific calculations for WCGS are discussed in Section 10 to determine additional benefits from such analysis.

The following types of containment penetration flow paths are evaluated:

- Penetration flow paths connected to the containment atmosphere
- Penetration flow paths connected to the RCS
- Penetration flow paths connected to the SGs

Details of these evaluations are provided in the following sections.

8.2 PROBABILISTIC EVALUATION OF THE CONTAINMENT PENETRATIONS

The probabilistic evaluation involves the calculation of the ICLERP and ΔLERF for each type of CIV penetration identified in Sections 8.2.2 through 8.2.4. Through finding acceptable ICLERP and ΔLERF values per Regulatory Guides 1.177 and 1.174 (less than 5.0E-08 and 1.0E-07, respectively), the maximum CTs were determined. For those penetrations that could not be justified to the target 7 day CT, shorter CTs were evaluated at 72, 48, 24, 12, and 8 hours.

The ICLERP is defined in Regulatory Guide 1.177 as:

- ICLERP = [(conditional LERF with the subject equipment out of service) – (baseline LERF with nominal expected equipment unavailabilities)] x duration of a single CT under consideration

The ICLERP was found for each penetration with one CIV within the penetration in maintenance. If there was more than one CIV within the penetration, the calculation was performed as many times as there are valves because any one of those valves could be in maintenance.

For the ΔLERF calculations, a fault tree analysis using the Westinghouse tool WesSAGE (Reference 7) was performed to evaluate all combinations of non-isolated penetration possibilities for each penetration. Non-isolations can be a result of valve failure as well as a valve being in maintenance. This was done for the current 4 hour CT and the proposed 168 hour CT or lesser times as necessary to meet the 1.0E-07/yr ΔLERF criteria. The increase in the probability of failing to isolate the penetration was then multiplied by the CDF to find the final ΔLERF.

The specific calculations for the ICLERPs and ΔLERFs for the CIVs vary from penetration to penetration. The variations are dependent upon the conditions and configurations of the penetration. Sections 8.2.2 through 8.2.4 provide the calculations for each penetration and the basis. Diagrams are also provided in these sections.

For generic applicability, a large variety of possible containment penetrations flow paths were identified, including connections to containment atmosphere, the RCS and the SGs. Different valve types (SOVs, MOVs, AOVs, check valves, and SRVs) and valve positioning (normally open or normally closed) were taken into account for each penetration type. Common cause due to valves within a flow path being of the same valve type and performing a similar function was also included. In addition, unavailability due to maintenance of the CIVs was included in the analysis.

The following lists the basis and general assumptions used for this generic study. These reflect a conservative approach in effort of making this analysis generically applicable.

Basis and General Assumptions:

Note that only Item numbers 1 and 3 are assumptions. The remaining Items provide the basis for the analysis.

1. Only one valve within a single containment penetration can be in maintenance at a time.

2. Maintenance on a valve can be conducted in one of two ways: a) the valve is in maintenance such that it is still intact and capable of maintaining its pressure boundary function or b) the valve is in maintenance such that it is not intact and is not capable of maintaining its pressure barrier function.

3. Before maintenance or repair is started on one CIV, it is assumed that the other CIVs within the penetration are checked to ensure they are in their proper positions. This assumption eliminates the need to include the probability that the operable valves were mis-positioned or transferred to the wrong position since they were last checked.

4. When there are two or more valves of the same valve type in the same position (open or closed) within a penetration, common cause failures are included in the ICLERP and ΔLERF calculations. That is, given that one CIV is out of service for repair, the second (operable) CIV of the same valve type has a dependent failure probability involving the common cause beta factor (for a case where there are two valves of the same type). For a case where there are three valves of the same type, the dependent failure probability involves the gamma factor. The Multiple Greek Letter common cause methodology was used in this analysis.

5. For two or more valves of the same 'valve type', differences in manufacturers are irrelevant.

6. All containment penetrations analyzed in the generic study, with the exception of RCS and SG connections, are considered to have a pipe diameter greater than the threshold value for a large release from the deterministic evaluation of containment hole size (see Section 8.3). Any pipe not directly connected to the RCS or SG with a diameter less than the large release threshold value is of insufficient size to provide a large release. Therefore, any CIV in a penetration not connected to the RCS or SGs with a size less than this threshold defaults to a CT of 168 hours.

   For a plant specific application of this analysis, it is expected that the plant will use the vent diameter threshold value provided in Section 8.3, to identify the penetrations that default to 168 hours.

7. The generic analysis calculates CTs for penetration configurations that can contain diverse CIV types including MOVs, AOVs, SOVs, check valves, and SRVs. For the generic analysis of penetrations with two or more normally open CIVs, a large number of valve combinations would need to be considered. To simplify the analysis, all CIVs in the penetration being analyzed were considered to be the same type. Common cause failure contributions were included for penetrations that actually contain the same type of CIVs.

   For plant specific application of the generic analysis for penetrations with different CIV types, base the CT on the CIV in the penetration with the highest failure rate. This approach is conservative because the highest failure probability of all the valve types within the penetration is chosen. It also provides simplistic generic applicability without complicating the penetration groups with a large number of possible valve type configurations. See Guidelines A and B of Step 5 of Section 9.1 for a more detailed description of the application of this statement.

8. The penetration configurations of this analysis were developed to be as generic as possible. Some of the configurations may not necessarily exist within all plants, and/or some of the maintenance situations may or may not be viable for all plants. For plant implementation of this generic analysis, it is expected that the utilities will determine the applicability of the CT in practice.

The analysis does not take any credit for improved CIV reliability.

8.2.1 Analysis Input Parameters

The majority of the inputs used in this analysis were obtained from plant PRA data. In an effort to make the analysis as generic as possible, the most limiting (e.g., highest failure rate) values were chosen from a plant-to-plant comparison. Therefore, variations in data from plant-to-plant are all covered under the inputs used in this analysis.

Table 8-1 provides a summary of the important parameters used in this analysis as well as the nomenclature used in the calculations.

Other variables that were used throughout the calculations are as follows:

P_{f1} = probability of penetration not isolated with no CT extension
P_{f2} = probability of penetration not isolated with CT extension
CCF_{to} = common cause failure of valve transferring open
CCF_{ftc} = common cause failure of valve failing to close

Table 8-1 Input Parameters

Input	Variable	Value	Reference
Proposed allowed outage time [hours]	CT	168	given
Current allowed outage time [hours]	CT	4	given
At-power internal and external event core damage frequency [per year]	CDF_T	1.0E-04	See note 6
Core damage frequency due to SGTR [per year]	CDF_{SGTR}	9.44E-06	Reference 4
Core damage frequency due to seismic event [per year]	CDF_{seis}	4.41E-05	utility input
Probability that valve fails to close for an SOV [per demand]	P_{ftc}	1.81E-02	Reference 4
Probability that valve fails to close for an MOV [per demand]	P_{ftc}	1.09E-02	Reference 4
Probability that valve fails to close for an AOV [per demand]	P_{ftc}	1.81E-02	Reference 4
Probability that valve fails to close for a check valve [per demand]	P_{ftc}	3.44E-03	Reference 4
Probability that valve fails to close for an SRV [per demand]	P_{ftc}	2.50E-02	Reference 4
Probability that valve spuriously transfers open with CT extension (168 hrs) for all valve types [per demand]	P_{to}	1.68E-04	See note 1
Probability that valve spuriously transfers open with current CT (4 hrs) for all valve types [per demand]	P_{topre}	4.00E-06	See note 1
Beta factor failure probability due to valve failing to close for an SOV	$beta_{ftc}$	0.1	Reference 4
Beta factor failure probability due to valve failing to close for an MOV	$beta_{ftc}$	0.088	Reference 4
Beta factor failure probability due to valve failing to close for an AOV	$beta_{ftc}$	0.1	Reference 4
Beta factor failure probability due to valve failing to close for an check valve	$beta_{ftc}$	0.1	Reference 4
Beta factor failure probability due to valve failing to close for an SRV	$beta_{ftc}$	0.22	Reference 4
Beta factor failure probability due to valve spuriously transferring open for all valve types	$beta_{to}$	0.1	Reference 5
Gamma factor failure probability due to valve spuriously transferring open for all valve types	$gamma_{to}$	0.5	Reference 5
Seismic pipe break probability for non-seismically qualified pipe	PB_{seis}	1	See note 2

Table 8-1 Input Parameters (cont.)

Input	Variable	Value	Reference
Random pipe break probability	PB_{random}	1.10E-03	See note 3
Probability that valve is unavailable due to corrective maintenance with current CT (4 hrs) [per demand]	P_{m1}	4.57E-05	See note 4
Probability that valve is unavailable due to maintenance with CT extension (168 hrs) [per demand]	P_{m2}	1.92E-03	See note 4
Probability that extra valve is unavailable due to maintenance (assume extra valve currently has 72 hour CT) [per demand]	P_{mE}	8.22E-04	See note 5

Note 1: For all normally closed valves, the probability of the valve spuriously transferring open is considered. For all normally open valves, the valves have the probability of a) failing to close and b) spuriously transferring open after it has closed. The "Advanced Light Water Reactor Utility Requirements Document" (Reference 5) lists some probabilities of motor and air operated valves spuriously transferring open, which are 1.0E-07/hr and 2.0E-07/hr respectively. It also states that the reverse leakage probability for a check valve is 1.0E-06/hr. For this analysis, a value of 1.00E-06/hr for a valve spuriously transferring open per hour was chosen as an upper bound for the CIV CT calculations. This value represents the most conservative failure probability and applies to all valve types. To find the probability that the valve spuriously transfers open with a CT extension (P_{to}), 1.00E-06 per hour was multiplied by the 168 hour CT to get 1.68E-04 per demand. To find P_{topre}, 1.00E-06 per hour * 4 hours = 4.00E-06 per demand.

Note 2: It is assumed that if a seismic event were to occur, all non-seismically qualified piping will fail, making the failure probability 1. Excluded are those sections of pipe between the isolation valve and the containment wall which is part of the break exclusion zone. The piping in these areas is more robust than the piping outside the break exclusion zone. Therefore, it is assumed that the probability of this piping failing randomly or due to seismic events is much lower than the piping outside the exclusion zone and is of no consequence to this analysis.

Note 3: From WCAP-14572, Rev. 1-NP-A, "Westinghouse Owners Group Application of Risk-Informed Methods to Piping Inservice Inspection Topical Report," (Reference 6), Table 3.5-3 provides example pipe failure probabilities. The range of large leak probabilities is from 4.55E-02 to 1.52E-05 for a 40 year lifetime. Conservatively, the CIV analysis considers the largest failure probability. Therefore the yearly pipe break frequency used is 4.55E-02 divided by 40 years (1.1E-03 per year). Note that the values for small leaks are not used since these represent leaks that are too small to result in significant (large) release from containment. Although these values represent breaks on a segment basis, this value is applied to piping that runs from the CIV to the next valve in place that could be used to isolate the penetration or to the closed system inside or outside containment.

Note 4: The CIV corrective maintenance frequency is derived from the highest valve failure rate used in this analysis which is approximately 2E-02 per demand, meaning the component is expected to fail every 50 actuations [(1) / (2E-02) = 50]. Each CIV is tested quarterly, and in addition it is assumed that there is one miscellaneous CIV actuation per year. Therefore, total CIV actuations per year are 5. Dividing 50 actuations per failure by 5 actuations per year gives 10 years per failure, or a corrective maintenance frequency of 0.1 per year. Therefore, the probability that a CIV is unavailable due to maintenance is:

- with the CT extension to 168 hours (P_{m2}) is 1.92E-03 [0.1/yr * 168 hours/ 8760 hours/year]
- with the current CT of 4 hours (P_{m1}) is 4.57E-05 [0.1/yr * 4 hours/ 8760 hours/year].

Regardless of the CT, it is conservatively assumed that the maintenance requires the entire length of the CT and is completed within that time.

Note 5: In the ΔLERF calculations the probability of the "extra valve" being in maintenance remains constant for all CTs. The "extra valve" is another valve in the penetration that is not considered a CIV but can aid in the isolation of the penetration. This extra valve, or valves, is mainly recognized in the RCS connection penetrations. It is assumed that the CT on all valves that are not considered CIVs is 72 hours. Therefore the probability that an extra valve is disabled due to maintenance (P_{mE}) is the maintenance frequency multiplied by 72 hours [8.2E-04 = 0.1 * 72 hours/ 8760 hours/year].

Note 6: The value of 1E-04/yr is used for the total at-power internal and external event CDF. This is based on the acceptance guidelines in Reg. Guide 1.174 (Reference 1), Section 2.2.4, that indicates the plant total CDF should be less than 1E-04/yr if changes to a plant's licensing basis are made that can result in a small increase in plant risk.

8.2.2 Class I: Penetration Flow Paths Connected to the Containment Atmosphere

The ICLERP and ΔLERF calculations for each Class I penetration are in Sections 8.2.2.1 through 8.2.2.4. Also provided are the basis, key assumptions, and diagrams of each penetration type being analyzed. The ICLERPs were found by simple hand calculations while the ΔLERF calculations were done with the aid of the Westinghouse-developed fault tree analysis program WesSAGE. Note, the calculations are done first with a CT of 168 hours. If the ICLERP or ΔLERF value at this CT does not meet the acceptance guidelines in Regulatory Guides 1.174 and 1.177, the analysis was repeated for values of 72, 48, 24, 12, or 8 hours to determine an appropriate CT.

These calculations are provided in this WCAP for a representative number of penetration configurations. Detailed analyses were completed for all penetration configurations. Those not provided followed the approach demonstrated in the sample calculations. The sample calculations shown below reflect only valve failure probabilities for SOVs.

For penetrations connected to containment atmosphere there are three potential means to get a large release, which are the major components of the ICLERP and ΔLERF calculations:

- Probability of 'Non Seismic CDF Release' (release due to internal event CDF): For systems that are considered 'open systems' inside and outside containment, meaning there is a direct connection to containment atmosphere and the outside environment. If a core damage event

occurs and the penetration isolation fails, then there is an open release path from inside containment (containment atmosphere) to the outside environment.

Example: core damage occurs due to internal event, the isolation valves fail (spuriously open or fail to close); direct release path into the outside environment.

Required inputs: CDF_T, valve failure probability, CT

- Probability of 'Random Pipe Break CDF Release' (releases due to internal event CDF plus random pipe break): For systems that are considered 'open systems' on one side of containment and closed (an actual closed loop) on the opposite side, if a core damage event occurs, and then a random pipe break were to occur causing the closed system to become open, and the CIVs were to fail, then an open path through containment would exist.

  Example: core damage occurs due to internal event, random pipe break occurs inside containment (in the closed system), the isolation valves fail; direct release path from the now open connection of containment atmosphere to the outside environment.

  Required inputs: CDF_T, PB_{random}, valve failure probability, CT

- Probability of 'Seismic CDF Release': For systems that are considered 'closed systems' on one or both sides of containment, if a core damage event occurs due to a seismic event, all closed loop piping fails both inside and outside containment, creating an open system connection both inside and outside containment (thus, the probability of a pipe break due to a seismic event equals one; $PB_{seis} = 1$). If CIV failure were to occur in addition to this, then an open path through containment would exist.

  Example: core damage occurs due to a seismic event, pipe breaks occur also due to the seismic event, the isolation valves fail; direct release path through the now open systems both inside and outside containment.

  Required inputs: CDF_{seis}, PB_{seis}, valve failure probability, CT

Assumption: It is assumed that in the case where there are closed systems both inside and outside containment, that the probability of a random pipe break occurring both inside and outside containment simultaneously is very small and not a significant contributor, therefore it is excluded from the analysis.

Table 8-2 provides a summary of all the generic containment penetrations evaluated. This summary provides a penetration diagram and description as well as the accepted CT for each type of maintenance activity and CIV type. Sample calculations are provided in Sections 8.2.2.1 – 8.2.2.4.

Table 8-2 Generic Summary: Class 1 – Penetration Flow Paths Connected to Containment Atmosphere

Calculation Number and Group	Penetration Description	Maintenance Description	Diagram	Valve Type Basis (see item 7 of Section 8.2)	Justified CT (hours)
1. Group I,A (see Section 8.2.2.1)	2 valves - normally closed - same valve type	CIV IC or OC is in maintenance such that the pressure boundary is or is not maintained (open system IC and OC regardless):	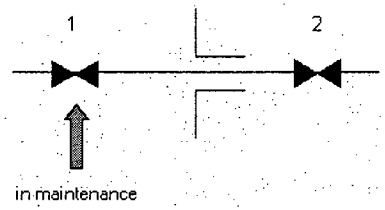 OR 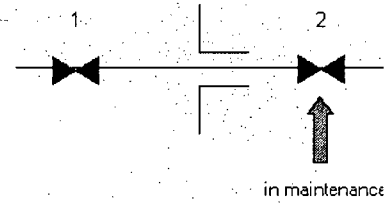	all	24

Table 8-2 (cont.) Generic Summary: Class 1 – Penetration Flow Paths Connected to Containment Atmosphere

Calculation Number and Group	Penetration Description	Maintenance Description	Diagram	Valve Type Basis (see item 7 of Section 8.2)	Justified CT (hours)
2. Group I,A (see Section 8.2.2.1)	2 valves - normally closed - different valve type	CIV IC or CIV is in maintenance such that the pressure boundary is or is not maintained (open system IC and OC regardless):	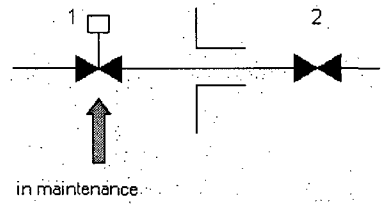 OR 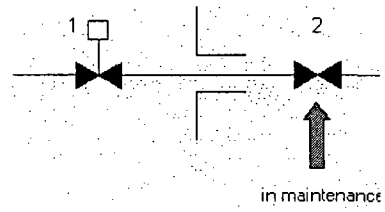	all	168

Table 8-2 (cont.) Generic Summary: Class 1 – Penetration Flow Paths Connected to Containment Atmosphere

Calculation Number and Group	Penetration Description	Maintenance Description	Diagram	Valve Type Basis (see item 7 of Section 8.2)	Justified CT (hours)
3. Group I,A (see Section 8.2.2.1)	2 valves - normally open - same valve type	CIV IC or OC is in maintenance such that the pressure boundary is or is not maintained (open system IC and OC regardless):	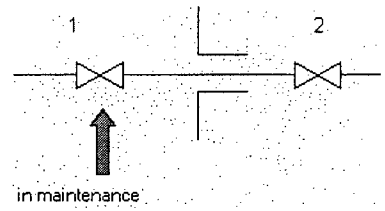 OR 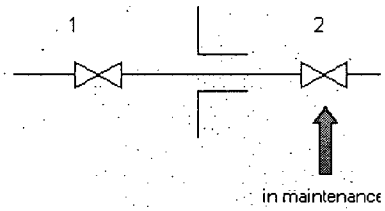	SOV MOV AOV Check SRV	24 24 24 24 12

Table 8-2 (cont.) Generic Summary: Class 1 – Penetration Flow Paths Connected to Containment Atmosphere

Calculation Number and Group	Penetration Description	Maintenance Description	Diagram	Valve Type Basis (see item 7 of Section 8.2)	Justified CT (hours)
4. Group I,A (see Section 8.2.2.1)	2 valves - normally open - different valve type	CIV IC or OC is in maintenance such that the pressure boundary is or is not maintained (open system IC and OC regardless):	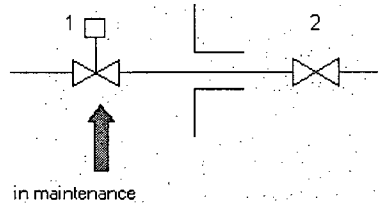 OR 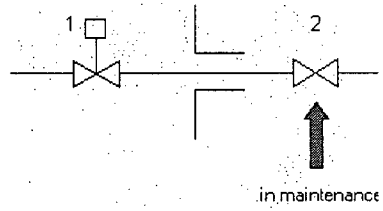	SOV MOV AOV Check SRV	168 168 168 168 168
5. Group I,A (see Section 8.2.2.1)	2 valves IC or OC in parallel, normally closed - 1 valve OC or IC, normally closed - same valve type	CIV opposite from CIVs in parallel is in maintenance such that the pressure boundary is or is not maintained (open system IC and OC regardless):	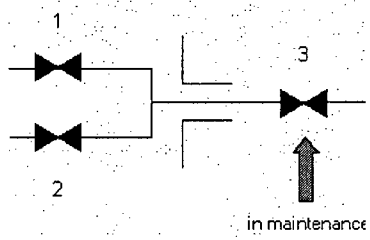	all	12

Table 8-2 (cont.) Generic Summary: Class 1 – Penetration Flow Paths Connected to Containment Atmosphere

Calculation Number and Group	Penetration Description	Maintenance Description	Diagram	Valve Type Basis (see item 7 of Section 8.2)	Justified CT (hours)
		either CIV in parallel is in maintenance such that the pressure boundary is or is not maintained (open system IC and OC regardless):	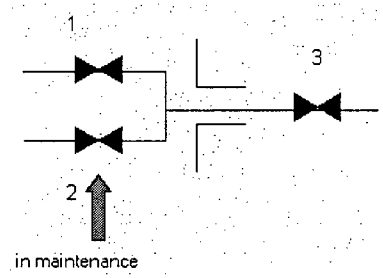	all	24
6. Group I,A (see Section 8.2.2.1)	2 valves IC or OC in parallel, normally closed - 1 valve OC or IC, normally closed - different valve type	CIV opposite from CIVs in parallel is in maintenance such that the pressure boundary is or is not maintained (open system IC and OC regardless):	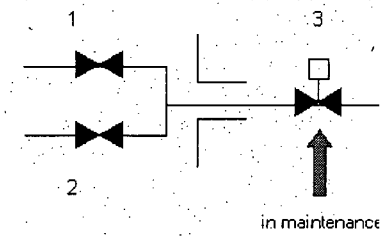	all	168
		either CIV in parallel is in maintenance such that the pressure boundary is or is not maintained (open system IC and OC regardless):	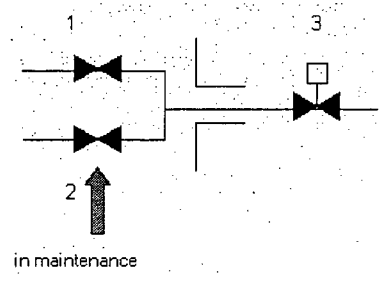	all	168

Table 8-2 (cont.) Generic Summary: Class 1 – Penetration Flow Paths Connected to Containment Atmosphere

Calculation Number and Group	Penetration Description	Maintenance Description	Diagram	Valve Type Basis (see item 7 of Section 8.2)	Justified CT (hours)
7. Group I,A (see Section 8.2.2.1)	2 valves IC or OC in parallel, normally open - 1 valve OC or IC, normally open - same valve type	CIV opposite from CIVs in parallel is in maintenance such that the pressure boundary is or is not maintained (open system IC and OC regardless):	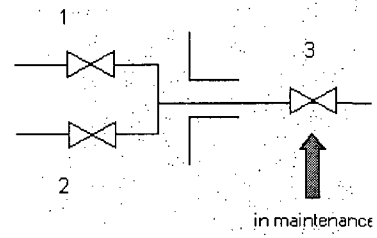	SOV MOV AOV Check SRV	12 12 12 12 8
		either CIV in parallel is in maintenance such that the pressure boundary is or is not maintained (open system IC and OC regardless):	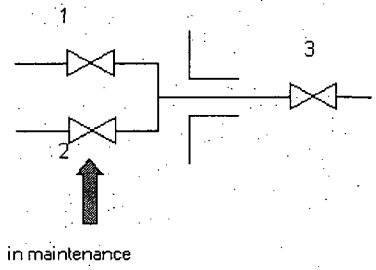	SOV MOV AOV Check SRV	24 24 24 24 12
8. Group I,A (see Section 8.2.2.1)	2 valves IC or OC in parallel, normally open - 1 valve OC or IC, normally open - different valve type	CIV opposite from CIVs in parallel is in maintenance such that the pressure boundary is or is not maintained (open system IC and OC regardless):	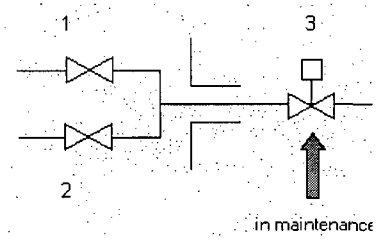	SOV MOV AOV Check SRV	72 168 72 168 72

Table 8-2 (cont.) Generic Summary: Class 1 – Penetration Flow Paths Connected to Containment Atmosphere

Calculation Number and Group	Penetration Description	Maintenance Description	Diagram	Valve Type Basis (see item 7 of Section 8.2)	Justified CT (hours)
		either CIV in parallel is in maintenance such that the pressure boundary is or is not maintained (open system IC and OC regardless):	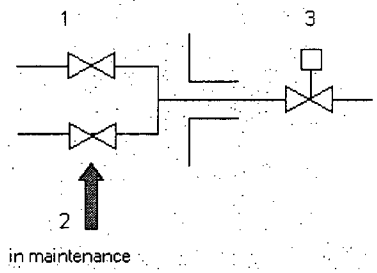	SOV MOV AOV Check SRV	168 168 168 168 168
9. Group I,A (see Section 8.2.2.1)	3 valves IC or OC in parallel, normally closed - 1 valve OC or IC, normally closed - same valve type	CIV opposite from CIVs in parallel is in maintenance such that the pressure boundary is or is not maintained (open system IC and OC regardless):	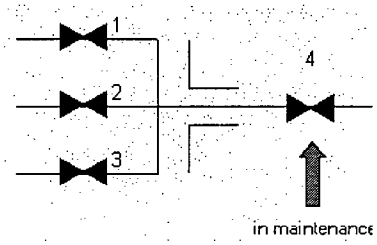	all	12
		any CIV in parallel is in maintenance such that the pressure boundary is or is not maintained (open system IC and OC regardless):	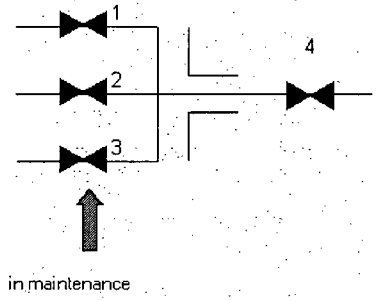	all	24

Table 8-2 (cont.) Generic Summary: Class 1 – Penetration Flow Paths Connected to Containment Atmosphere

Calculation Number and Group	Penetration Description	Maintenance Description	Diagram	Valve Type Basis (see item 7 of Section 8.2)	Justified CT (hours)
10. Group I,A (see Section 8.2.2.1)	3 valves IC or OC in parallel, normally closed - 1 valve OC or IC, normally closed - different valve type	CIV opposite from CIVs in parallel is in maintenance such that the pressure boundary is or is not maintained (open system IC and OC regardless):	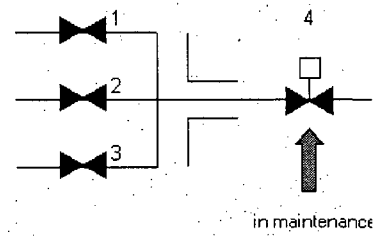	all	168
		either CIV in parallel is in maintenance such that the pressure boundary is or is not maintained (open system IC and OC regardless):	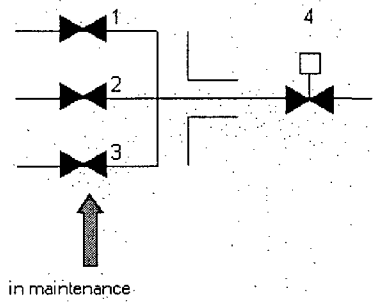	all	168
11. Group I,A (see Section 8.2.2.1)	3 valves IC or OC in parallel, normally open - 1 valve OC or IC, normally open - same valve type	CIV opposite from CIVs in parallel is in maintenance such that the pressure boundary is or is not maintained (open system IC and OC regardless):	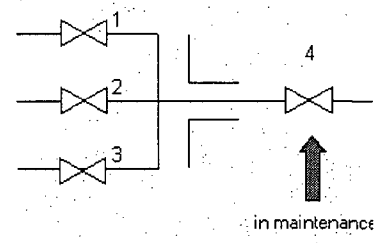	SOV MOV AOV Check SRV	12 12 12 12 4

Table 8-2 (cont.) Generic Summary: Class 1 – Penetration Flow Paths Connected to Containment Atmosphere

Calculation Number and Group	Penetration Description	Maintenance Description	Diagram	Valve Type Basis (see item 7 of Section 8.2)	Justified CT (hours)
		any CIV in parallel is in maintenance such that the pressure boundary is or is not maintained (open system IC and OC regardless):	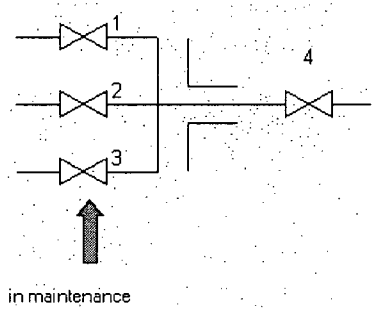	SOV MOV AOV Check SRV	24 24 24 24 12
12. Group I,A (see Section 8.2.2.1)	3 valves IC or OC in parallel, normally open - 1 valve OC or IC, normally open - different valve type	CIV opposite from CIVs in parallel is in maintenance such that the pressure boundary is or is not maintained (open system IC and OC regardless):	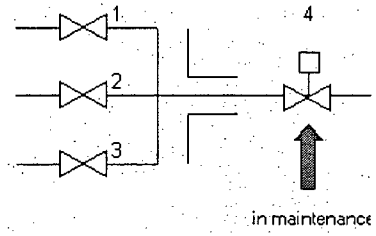	SOV MOV AOV Check SRV	72 72 72 168 72
		any CIV in parallel is in maintenance such that the pressure boundary is or is not maintained (open system IC and OC regardless):	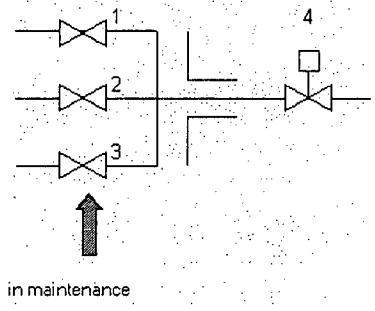	SOV MOV AOV Check SRV	168 168 168 168 72

Table 8-2 (cont.) Generic Summary: Class 1 – Penetration Flow Paths Connected to Containment Atmosphere

Calculation Number and Group	Penetration Description	Maintenance Description	Diagram	Valve Type Basis (see item 7 of Section 8.2)	Justified CT (hours)
13. Group I,A (see Section 8.2.2.1)	2 valves - 1 normally closed, 1 normally open - same valve type	CIV IC is in maintenance such that the pressure boundary is or is not maintained (open system IC regardless):	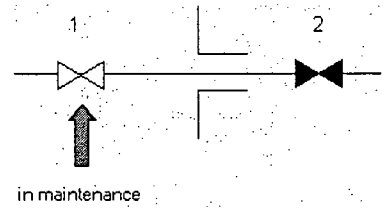	SOV MOV AOV Check SRV	168 168 168 168 168
		CIV OC is in maintenance such that the pressure boundary is or is not maintained (open system OC regardless):	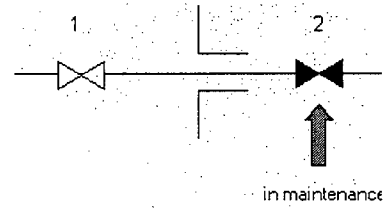	SOV MOV AOV Check SRV	168 168 168 168 168
14 Group I,A (see Section 8.2.2.1)	2 valves - 1 normally closed, 1 normally open - different valve type	CIV IC is in maintenance such that the pressure boundary is or is not maintained (open system IC regardless):	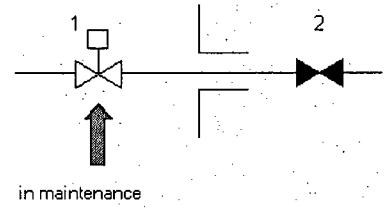	SOV MOV AOV Check SRV	168 168 168 168 168
		CIV OC is in maintenance such that the pressure boundary is or is not maintained (open system OC regardless):	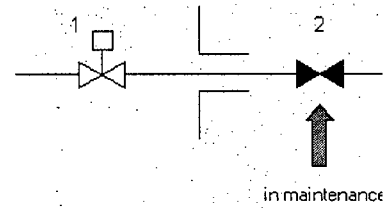	SOV MOV AOV Check SRV	168 168 168 168 168

Table 8-2 (cont.) Generic Summary: Class 1 – Penetration Flow Paths Connected to Containment Atmosphere

Calculation Number and Group	Penetration Description	Maintenance Description	Diagram	Valve Type Basis (see item 7 of Section 8.2)	Justified CT (hours)
15. Group I,A (see Section 8.2.2.1)	2 valves IC in parallel, normally closed - 2 valves OC in parallel, normally closed - all same valve types	either CIV IC or either CIV OC is in maintenance such that the pressure boundary is or is not maintained (open system IC and OC regardless):	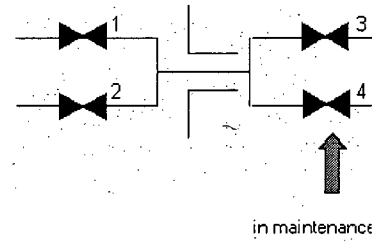 OR 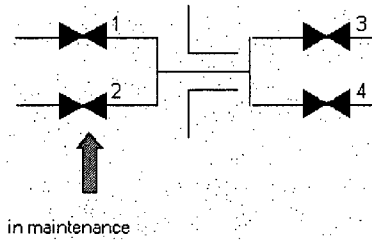	all	12

Table 8-2 (cont.) Generic Summary: Class 1 – Penetration Flow Paths Connected to Containment Atmosphere

Calculation Number and Group	Penetration Description	Maintenance Description	Diagram	Valve Type Basis (see item 7 of Section 8.2)	Justified CT (hours)
16. Group I,A (see Section 8.2.2.1)	2 valves IC in parallel, 1 normally closed, 1 normally open - 2 valves OC in parallel, 1 normally closed, 1 normally open - all same valve types	either open CIV IC or OC is in maintenance such that the pressure boundary is or is not maintained (open system IC and OC regardless):	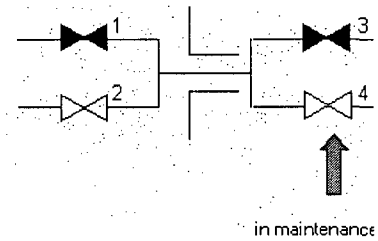 OR 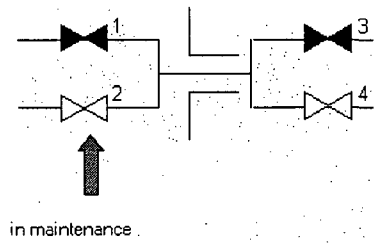	SOV MOV AOV Check SRV	24 24 24 24 12

Table 8-2 (cont.) Generic Summary: Class 1 – Penetration Flow Paths Connected to Containment Atmosphere

Calculation Number and Group	Penetration Description	Maintenance Description	Diagram	Valve Type Basis (see item 7 of Section 8.2)	Justified CT (hours)
		either closed CIV IC or OC is in maintenance such that the pressure boundary is or is not maintained (open system IC and OC regardless):	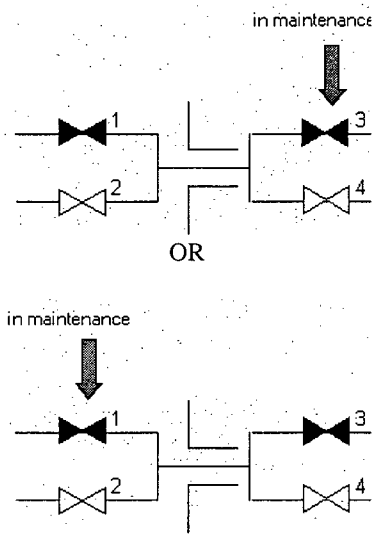	SOV MOV AOV Check SRV	24 24 24 24 24

Table 8-2 (cont.) Generic Summary: Class 1 – Penetration Flow Paths Connected to Containment Atmosphere

Calculation Number and Group	Penetration Description	Maintenance Description	Diagram	Valve Type Basis (see item 7 of Section 8.2)	Justified CT (hours)
1. Group I,B (see Section 8.2.2.2)	1 valve - normally closed	CIV OC is in maintenance such that the pressure boundary is or is not maintained (open system OC regardless): OR CIV is IC and is in maintenance such that the pressure boundary is maintained (still closed system IC):	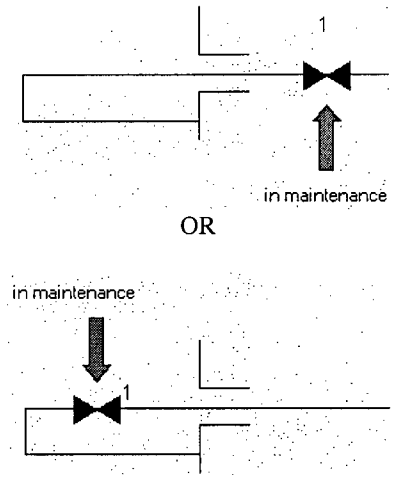	all	8
		CIV IC is in maintenance such that the pressure boundary is NOT maintained (becomes open system IC):	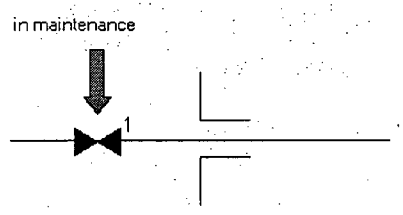	all	4

Table 8-2 (cont.) Generic Summary: Class 1 – Penetration Flow Paths Connected to Containment Atmosphere

Calculation Number and Group	Penetration Description	Maintenance Description	Diagram	Valve Type Basis (see item 7 of Section 8.2)	Justified CT (hours)
2. Group I,B (see Section 8.2.2.2)	1 valve - normally open	CIV OC is in maintenance such that the pressure boundary is or is not maintained (open system OC regardless): OR CIV is IC and is in maintenance such that the pressure boundary is maintained (still closed system IC):	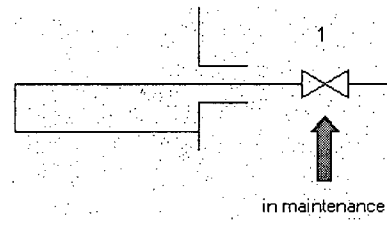 OR 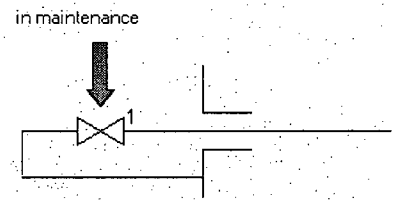	SOV MOV AOV Check SRV	8 8 8 8 8
		CIV is IC and is in maintenance such that the pressure boundary is NOT maintained (becomes open system IC):	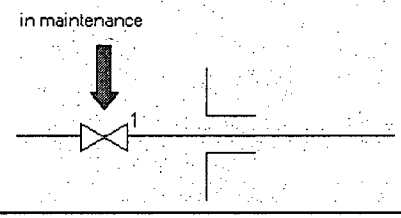	SOV MOV AOV Check SRV	4 4 4 4 4

Table 8-2 (cont.) Generic Summary: Class 1 – Penetration Flow Paths Connected to Containment Atmosphere

Calculation Number and Group	Penetration Description	Maintenance Description	Diagram	Valve Type Basis (see item 7 of Section 8.2)	Justified CT (hours)
3. Group I,B (see Section 8.2.2.2)	2 valves - normally closed - same valve type	CIV OC is in maintenance such that the pressure boundary is or is not maintained (open system OC regardless): OR CIV IC is in maintenance such that the pressure boundary is maintained (still closed system IC):	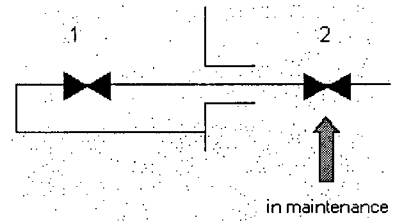 OR 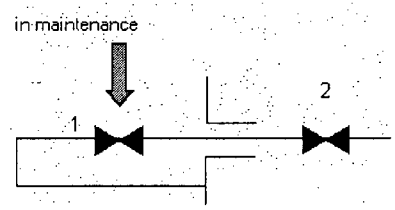	all	72
		CIV IC is in maintenance such that the pressure boundary is NOT maintained (becomes open system IC):	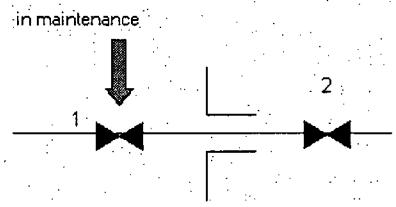	all	24

Table 8-2 (cont.) Generic Summary: Class 1 – Penetration Flow Paths Connected to Containment Atmosphere

Calculation Number and Group	Penetration Description	Maintenance Description	Diagram	Valve Type Basis (see item 7 of Section 8.2)	Justified CT (hours)
4. Group I,B (see Section 8.2.2.2)	2 valves - normally closed - different valve type	CIV OC is in maintenance such that the pressure boundary is or is not maintained (open system OC regardless): OR CIV IC is in maintenance such that the pressure boundary is maintained (still closed system IC):	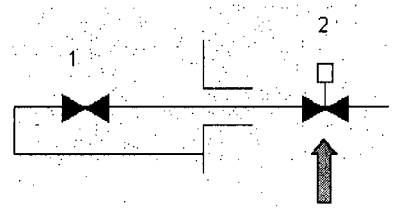 OR 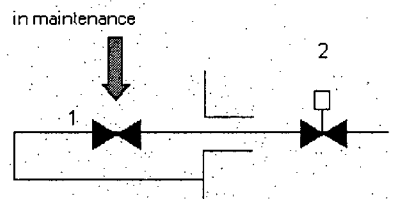	all	168
		CIV IC is in maintenance such that the pressure boundary is NOT maintained (becomes open system IC):	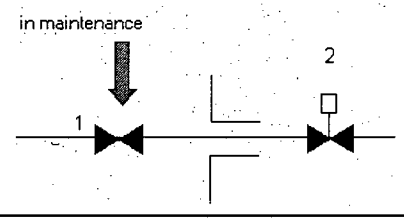	all	168

Table 8-2 (cont.) Generic Summary: Class 1 – Penetration Flow Paths Connected to Containment Atmosphere

Calculation Number and Group	Penetration Description	Maintenance Description	Diagram	Valve Type Basis (see item 7 of Section 8.2)	Justified CT (hours)
5. Group I,B (see Section 8.2.2.2)	2 valves - normally open - same valve type	CIV OC is in maintenance such that the pressure boundary is or is not maintained (open system OC regardless): OR CIV IC is in maintenance such that the pressure boundary is maintained (still closed system IC):	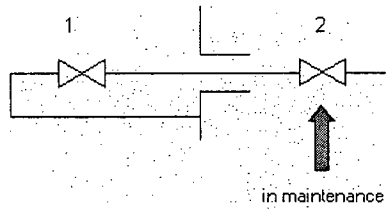 OR 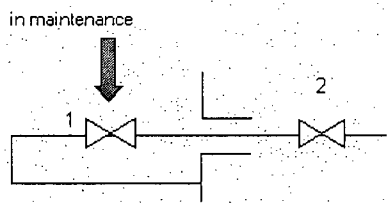	SOV MOV AOV Check SRV	72 72 72 72 24
		CIV IC is in maintenance such that the pressure boundary is NOT maintained (becomes open system IC):	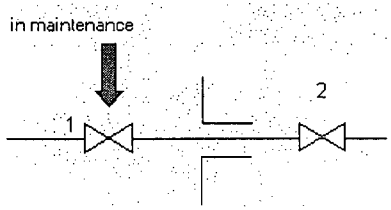	SOV MOV AOV Check SRV	24 24 24 24 12

Table 8-2 (cont.) Generic Summary: Class 1 – Penetration Flow Paths Connected to Containment Atmosphere

Calculation Number and Group	Penetration Description	Maintenance Description	Diagram	Valve Type Basis (see item 7 of Section 8.2)	Justified CT (hours)
6. Group I,B (see Section 8.2.2.2)	2 valves - normally open - different valve type	CIV OC is in maintenance such that the pressure boundary is or is not maintained (open system OC regardless): OR CIV IC is in maintenance such that the pressure boundary is maintained (still closed system IC):	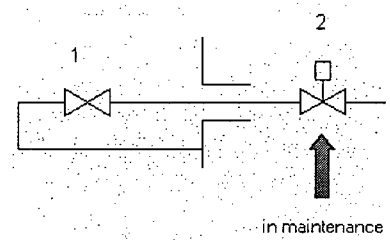 OR 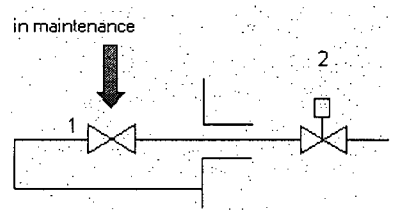	SOV MOV AOV Check SRV	168 168 168 168 168
		CIV IC is in maintenance such that the pressure boundary is NOT maintained (becomes open system IC):	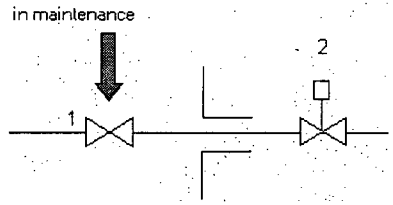	SOV MOV AOV Check SRV	168 168 168 168 168

Table 8-2 (cont.) Generic Summary: Class 1 – Penetration Flow Paths Connected to Containment Atmosphere

Calculation Number and Group	Penetration Description	Maintenance Description	Diagram	Valve Type Basis (see item 7 of Section 8.2)	Justified CT (hours)
7. Group I,B (see Section 8.2.2.2)	2 valves OC in parallel, 1 normally closed, 1 normally open, same valve types - 1 valve IC, normally open, different valve type from the valves OC	closed CIV OC is in maintenance such that the pressure boundary is or is not maintained (open system OC regardless):	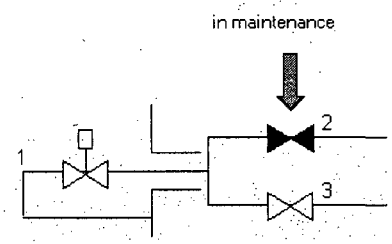	SOV MOV AOV Check SRV	168 168 168 168 168
		open CIV OC is in maintenance such that the pressure boundary is or is not maintained (open system OC regardless):	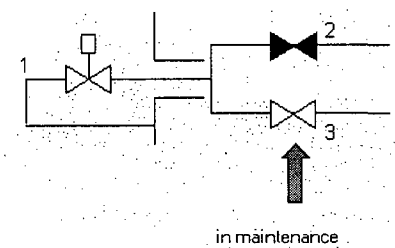	SOV MOV AOV Check SRV	168 168 168 168 168
		CIV IC is in maintenance such that pressure boundary is maintained (still closed system IC):	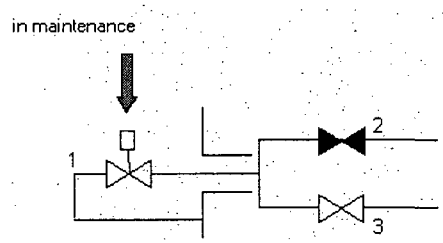	SOV MOV AOV Check SRV	168 168 168 168 168

Table 8-2 (cont.) Generic Summary: Class 1 – Penetration Flow Paths Connected to Containment Atmosphere

Calculation Number and Group	Penetration Description	Maintenance Description	Diagram	Valve Type Basis (see item 7 of Section 8.2)	Justified CT (hours)
		CIV IC is in maintenance such that pressure boundary is NOT maintained (becomes open system IC):	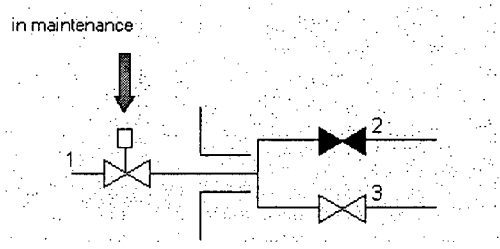	SOV MOV AOV Check SRV	168 168 168 168 168
8. Group I,B (see Section 8.2.2.2)	2 valves OC in parallel, 1 normally closed, 1 normally open - 2 valves IC in parallel, 1 normally closed, 1 normally open - all same valve types	closed CIV OC is in maintenance such that the pressure boundary is or is not maintained (open system OC regardless):	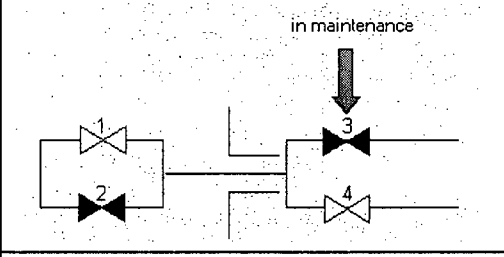	SOV MOV AOV Check SRV	72 72 72 72 72
		open CIV OC is in maintenance such that the pressure boundary is or is not maintained (open system OC regardless):	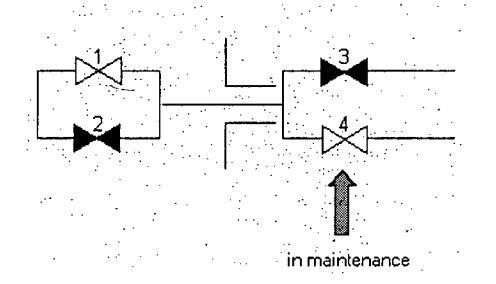	SOV MOV AOV Check SRV	72 72 72 72 24

Table 8-2 (cont.) Generic Summary: Class 1 – Penetration Flow Paths Connected to Containment Atmosphere

Calculation Number and Group	Penetration Description	Maintenance Description	Diagram	Valve Type Basis (see item 7 of Section 8.2)	Justified CT (hours)
		closed CIV IC is in maintenance such that the pressure boundary is maintained (still closed system IC):	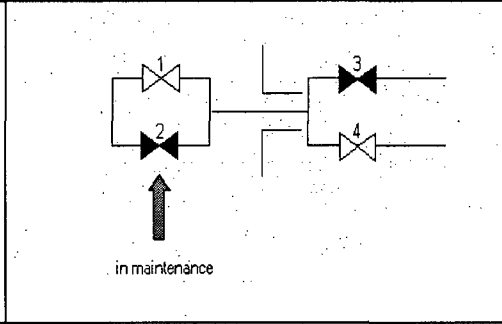	SOV MOV AOV Check SRV	72 72 72 72 72
		closed CIV IC is in maintenance such that the pressure boundary is NOT maintained (becomes open system IC):	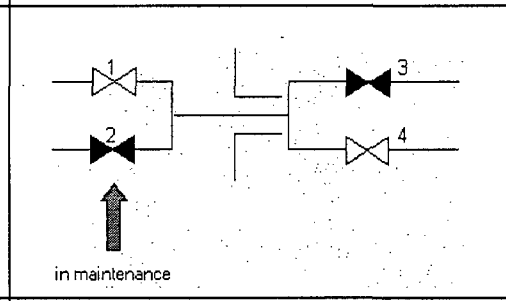	SOV MOV AOV Check SRV	24 24 24 24 24
		open CIV IC is in maintenance such that the pressure boundary is maintained (still closed system IC):	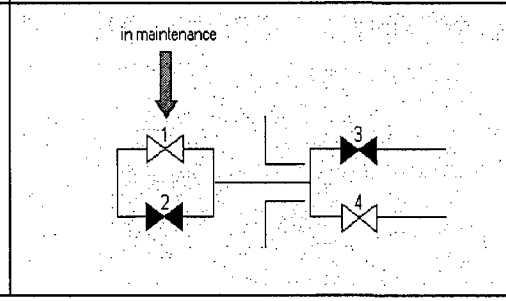	SOV MOV AOV Check SRV	72 72 72 72 24

Table 8-2 (cont.) Generic Summary: Class 1 – Penetration Flow Paths Connected to Containment Atmosphere

Calculation Number and Group	Penetration Description	Maintenance Description	Diagram	Valve Type Basis (see item 7 of Section 8.2)	Justified CT (hours)
		open CIV IC is in maintenance such that the pressure boundary is NOT maintained (still closed system IC):	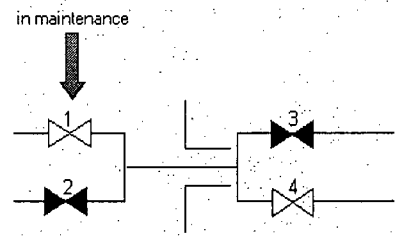	SOV MOV AOV Check SRV	24 24 24 24 12
1. Group I,C (see Section 8.2.2.3)	1 valve - normally closed	CIV is IC and is in maintenance such that the pressure boundary is or is not maintained (open system IC regardless): OR CIV is OC and is in maintenance such that the pressure boundary is maintained (still closed system OC):	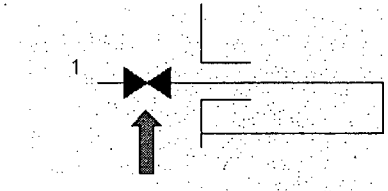 OR 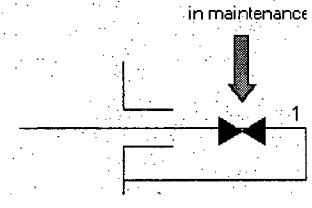	all	8

Table 8-2 (cont.) Generic Summary: Class 1 – Penetration Flow Paths Connected to Containment Atmosphere

Calculation Number and Group	Penetration Description	Maintenance Description	Diagram	Valve Type Basis (see item 7 of Section 8.2)	Justified CT (hours)
		CIV is OC and is in maintenance such that the pressure boundary is NOT maintained (becomes open system OC):	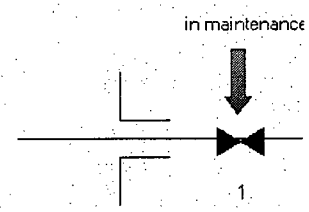	all	4
2. Group I,C (see Section 8.2.2.3)	1 valve - normally open	CIV is IC and is in maintenance such that the pressure boundary is or is not maintained (open system IC regardless): OR CIV is OC and is in maintenance such that the pressure boundary is maintained (still closed system OC):	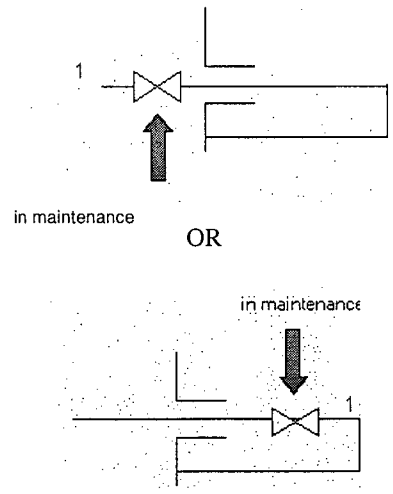	SOV MOV AOV Check SRV	8 8 8 8 8

Table 8-2 (cont.) Generic Summary: Class 1 – Penetration Flow Paths Connected to Containment Atmosphere

Calculation Number and Group	Penetration Description	Maintenance Description	Diagram	Valve Type Basis (see item 7 of Section 8.2)	Justified CT (hours)
		CIV is OC and is in maintenance such that the pressure boundary is NOT maintained (becomes open system OC):	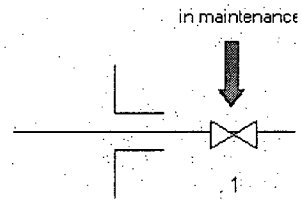	SOV MOV AOV Check SRV	4 4 4 4 4
3. Group I,C (see Section 8.2.2.3)	2 valves - normally closed - same valve type	CIV IC is in maintenance such that the pressure boundary is or is not maintained (open system IC regardless): OR CIV OC is in maintenance such that the pressure boundary is maintained (still closed system OC):	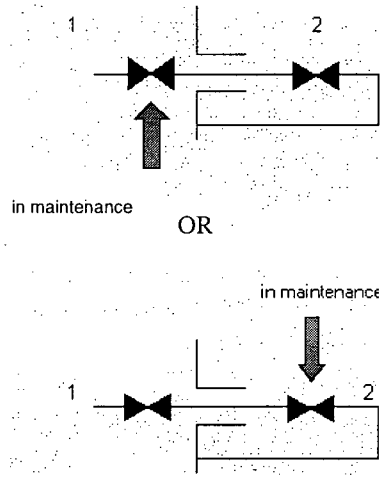	all	72

Table 8-2 (cont.) Generic Summary: Class 1 – Penetration Flow Paths Connected to Containment Atmosphere

Calculation Number and Group	Penetration Description	Maintenance Description	Diagram	Valve Type Basis (see item 7 of Section 8.2)	Justified CT (hours)
		CIV OC is in maintenance such that the pressure boundary is NOT maintained (becomes open system OC):	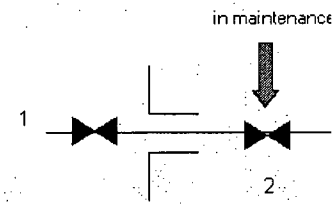	all	24
4. Group I,C (see Section 8.2.2.3)	2 valves - normally closed - different valve type	CIV IC is in maintenance such that the pressure boundary is or is not maintained (open system IC regardless): OR CIV OC is in maintenance such that the pressure boundary is maintained (still closed system OC):	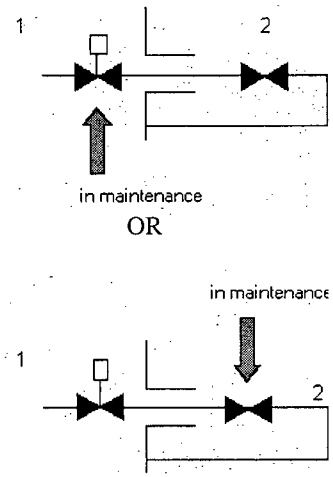	all	168

Table 8-2 (cont.) Generic Summary: Class 1 – Penetration Flow Paths Connected to Containment Atmosphere

Calculation Number and Group	Penetration Description	Maintenance Description	Diagram	Valve Type Basis (see item 7 of Section 8.2)	Justified CT (hours)
		CIV OC is in maintenance such that the pressure boundary is NOT maintained (becomes open system OC):	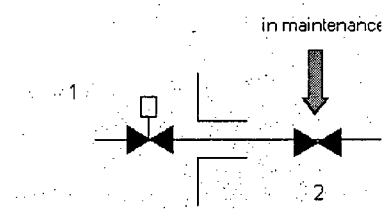	all	168
5. Group I,C (see Section 8.2.2.3)	2 valves - normally open - same valve type	CIV IC is in maintenance such that the pressure boundary is or is not maintained (open system IC regardless): OR CIV OC is in maintenance such that the pressure boundary is maintained (still closed system OC):	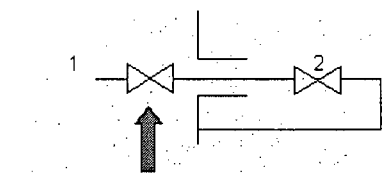 in maintenance OR 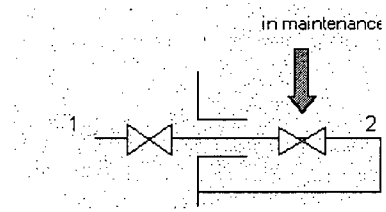	SOV MOV AOV Check SRV	72 72 72 72 24

Table 8-2 (cont.) Generic Summary: Class 1 – Penetration Flow Paths Connected to Containment Atmosphere

Calculation Number and Group	Penetration Description	Maintenance Description	Diagram	Valve Type Basis (see item 7 of Section 8.2)	Justified CT (hours)
		CIV OC is in maintenance such that the pressure boundary is NOT maintained (becomes open system OC):	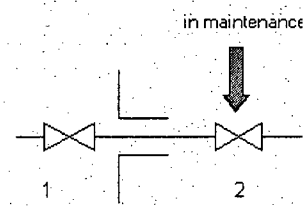	SOV MOV AOV Check SRV	24 24 24 24 12
6. Group I,C (see Section 8.2.2.3)	2 valves - normally open - different valve type	CIV IC is in maintenance such that the pressure boundary is or is not maintained (open system IC regardless): OR CIV OC is in maintenance such that the pressure boundary is maintained (still closed system OC):	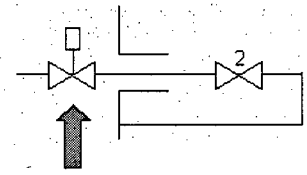 in maintenance OR 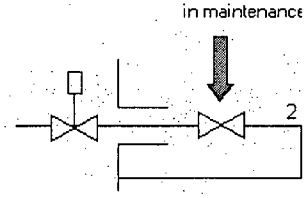	SOV MOV AOV Check SRV	168 168 168 168 168

Table 8-2 (cont.) Generic Summary: Class 1 – Penetration Flow Paths Connected to Containment Atmosphere

Calculation Number and Group	Penetration Description	Maintenance Description	Diagram	Valve Type Basis (see item 7 of Section 8.2)	Justified CT (hours)
		CIV OC is in maintenance such that the pressure boundary is NOT maintained (becomes open system OC):	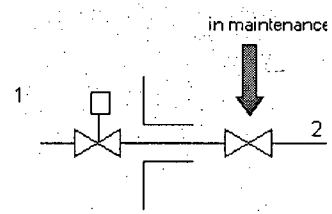	SOV MOV AOV Check SRV	168 168 168 168 168
1. Group I,D (see Section 8.2.2.4)	2 valves - normally closed - different valve type	CIV OC is in maintenance such that the pressure boundary is maintained (still closed system OC): OR CIV IC is in maintenance such that the pressure boundary is maintained (still closed system IC):	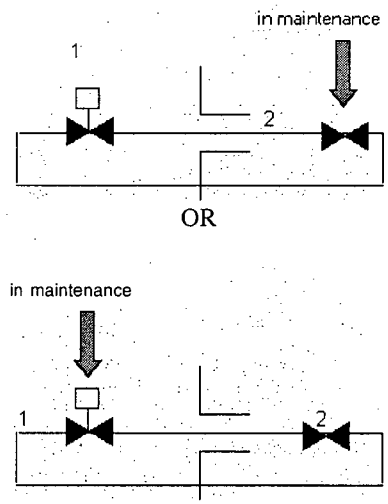	all	168

Table 8-2 (cont.) Generic Summary: Class 1 – Penetration Flow Paths Connected to Containment Atmosphere

Calculation Number and Group	Penetration Description	Maintenance Description	Diagram	Valve Type Basis (see item 7 of Section 8.2)	Justified CT (hours)
		CIV OC is in maintenance such that the pressure boundary is NOT maintained (becomes open system OC): OR CIV IC is in maintenance such that the pressure boundary is NOT maintained (becomes open system IC):	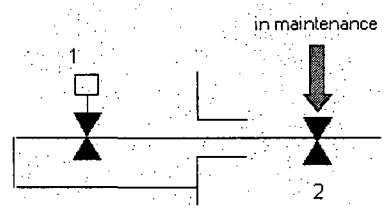 OR 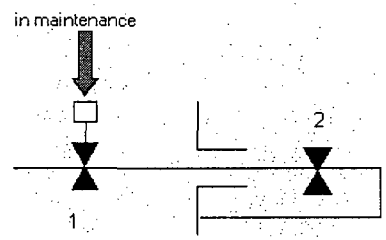	all	168

8.2.2.1 Group IA: Flow paths connected directly to the containment atmosphere and the outside environment

Calculation Number 1, Group I,A - 2 valves - normally closed - same valve type (see Table 8-2)

- CIV IC or OC is in maintenance such that the pressure boundary is or is not maintained (open system IC and OC regardless):

OR

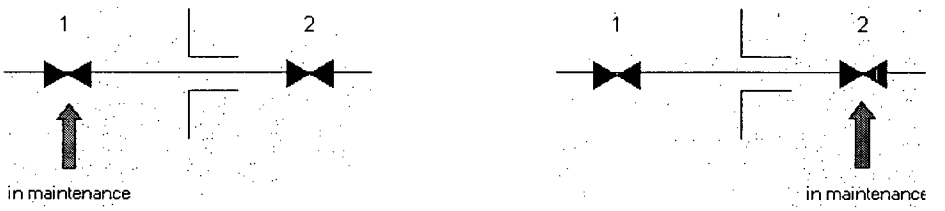

Key modeling details:

a,c

[ ]

a,c

[ ]

FINAL CT EXTENSION for valves 1 or 2, for any valve type: 24 hours (limited by ICLERP)

Calculation Number 2, Group I,A - 2 valves - normally closed - different valve type (see Table 8-2)

- CIV IC or CIV is in maintenance such that the pressure boundary is or is not maintained (open system IC and OC regardless):

OR

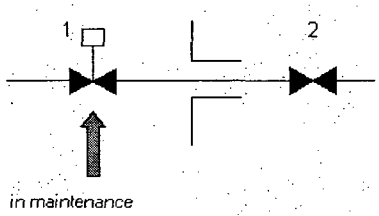

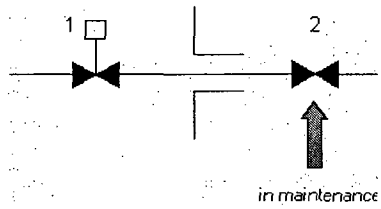

Key modeling details:

a,c

[ ]

a,c

FINAL CT EXTENSION for valves 1 or 2, for any valve type: 168 hours

Calculation Number 3, Group I,A - 2 valves - normally open - same valve type (see Table 8-2)

- CIV IC or OC is in maintenance such that the pressure boundary is or is not maintained (open system IC and OC regardless):

OR

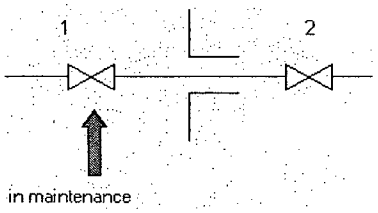

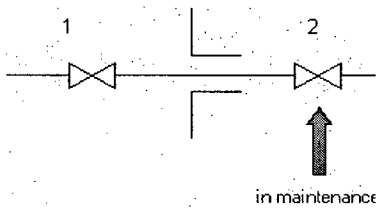

Key modeling details:

a,c

a,c

[ ]

FINAL CT EXTENSION for valves 1 or 2, for SOV type: 24 hours (limited by ICLERP)

Calculation Number 4, Group I,A - 2 valves - normally open - different valve type (see Table 8-2)

- CIV IC or OC is in maintenance such that the pressure boundary is or is not maintained (open system IC and OC regardless):

OR

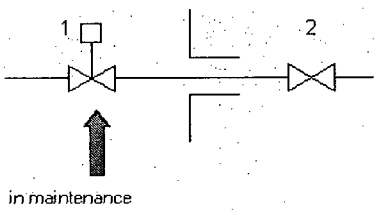

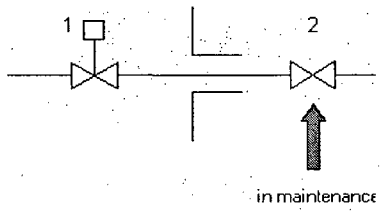

Key modeling details:

a,c

[ ]

a,c

FINAL CT EXTENSION for valves 1 or 2, for SOV type: 168 hours

8.2.2.2 Group IB: Flow paths closed inside containment and connected directly to the outside environment

Calculation Number 3, Group I,B - 2 valves - normally closed - same valve type (see Table 8-2)

- CIV OC is in maintenance such that the pressure boundary is or is not maintained (open system OC regardless): OR
  CIV IC is in maintenance such that the pressure boundary is maintained (still closed system IC):

OR

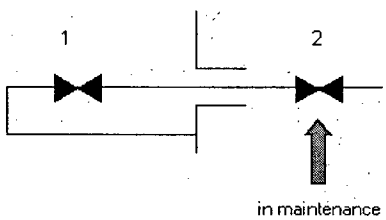

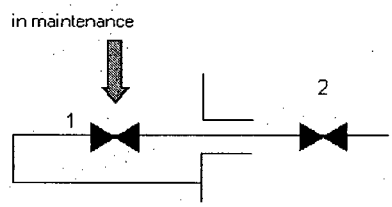

Key modeling details:

a,c

a,c

FINAL CT EXTENSION for valves 2 or 1, for any valve type: 72 hours (limited by ICLERP)

- CIV IC is in maintenance such that the pressure boundary is NOT maintained (becomes open system IC):

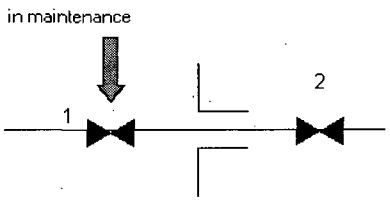

Key modeling details:

a,c

[ ]

FINAL CT EXTENSION for valve 1, for any valve type: 24 hours, (limited by ICLERP)

Calculation Number 4, Group I,B - 2 valves - normally closed - different valve type (see Table 8-2)

- CIV OC is in maintenance such that the pressure boundary is or is not maintained (open system OC regardless): OR
  CIV IC is in maintenance such that the pressure boundary is maintained (still closed system IC):

OR

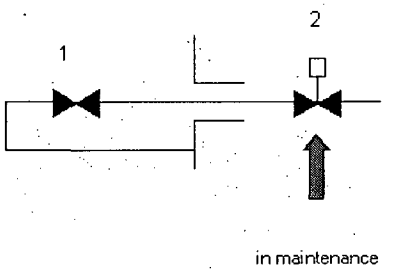

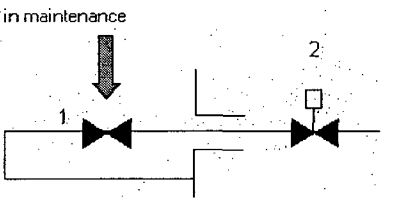

Key modeling details:

a,c

[ ]

a,c

FINAL CT EXTENSION for valves 2 or 1, for any valve type: 168 hours

- CIV IC is in maintenance such that the pressure boundary is NOT maintained (becomes open system IC):

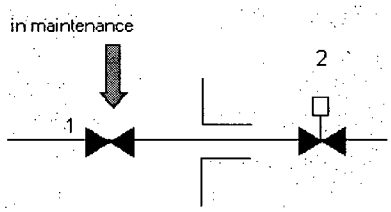

Key modeling details:

a,c

a,c

FINAL CT EXTENSION for valve 1, for any valve type: 168 hours.

Calculation Number 5, Group I,B - 2 valves - normally open - same valve type (see Table 8-2)

- CIV OC is in maintenance such that the pressure boundary is or is not maintained (open system OC regardless): OR
  CIV IC is in maintenance such that the pressure boundary is maintained (still closed system IC):

OR

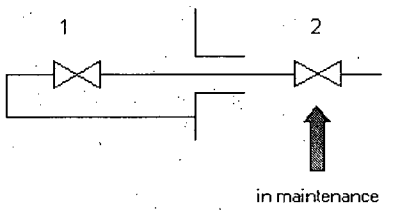

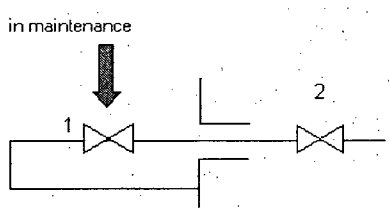

Key modeling details:

a,c

a,c

[ ]

FINAL CT EXTENSION for valves 2 or 1, for SOV type: 72 hours (limited by ICLERP)

- CIV IC is in maintenance such that the pressure boundary is NOT maintained (becomes open system IC):

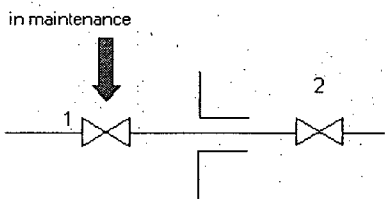

Key modeling details:

a,c

[ ]

a,c

FINAL CT EXTENSION for valve 1, for SOV type: 24 hours, (limited by ICLERP)

Calculation Number 6, Group I,B - 2 valves - normally open - different valve type (see Table 8-2)

- CIV OC is in maintenance such that the pressure boundary is or is not maintained (open system OC regardless): OR
  CIV IC is in maintenance such that the pressure boundary is maintained (still closed system IC):

OR

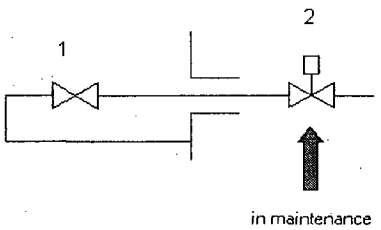

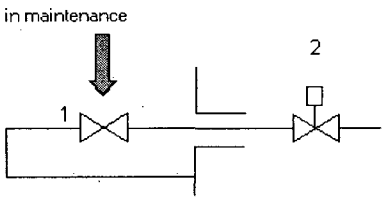

Key modeling details:

a,c

[ ]

FINAL CT EXTENSION for valves 2 or 1, for SOV type: 168 hours

- CIV IC is in maintenance such that the pressure boundary is NOT maintained (becomes open system IC):

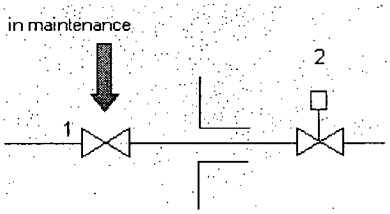

Key modeling details:

a,c

[ ]

FINAL CT EXTENSION for valve 1, for SOV type: 168 hours

8.2.2.3 Group IC: Flow paths connected directly to the containment atmosphere and closed outside containment

Calculation Number 3, Group I,C - 2 valves - normally closed - same valve type (see Table 8-2)

- CIV IC is in maintenance such that the pressure boundary is or is not maintained (open system IC regardless):
  CIV OC is in maintenance such that the pressure boundary is maintained (still closed system OC):

OR

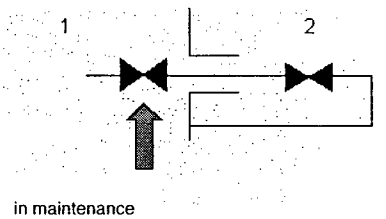

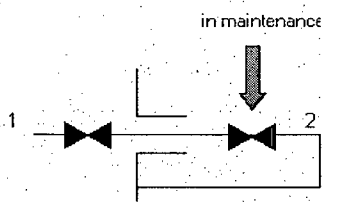

Key modeling details:

a,c

[ ]

a,c

FINAL CT EXTENSION for valves 1 or 2, for any valve type: 72 hours (limited by ICLERP)

- CIV OC is in maintenance such that the pressure boundary is NOT maintained (becomes open system OC):

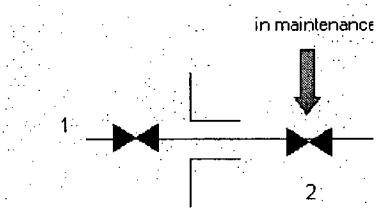

Key modeling details:

a,c

a,c

[ ]

FINAL CT EXTENSION for valve 2, assuming any valve type: 24 hours, (limited by ICLERP)

Calculation Number 4, Group I,C - 2 valves - normally closed - different valve type (see Table 8-2)

- CIV IC is in maintenance such that the pressure boundary is or is not maintained (open system IC regardless): OR
  CIV OC is in maintenance such that the pressure boundary is maintained (still closed system OC):

OR

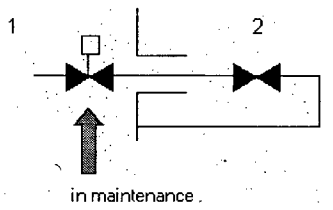

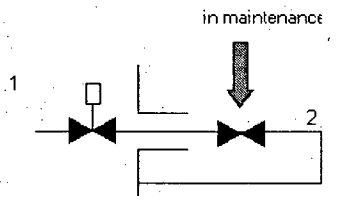

Key modeling details:

a,c

[ ]

a,c

FINAL CT EXTENSION for valves 1 or 2, for any valve type: 168 hours

- CIV OC is in maintenance such that the pressure boundary is NOT maintained (becomes open system OC):

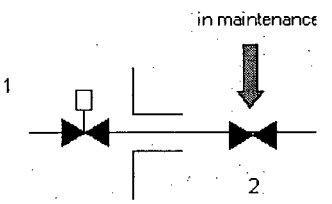

Key modeling details:

a,c

a,c

FINAL CT EXTENSION for valve 2, for any valve type: 168 hours.

Calculation Number 5, Group I,C - 2 valves - normally open - same valve type (see Table 8-2)

- CIV IC is in maintenance such that the pressure boundary is or is not maintained (open system IC regardless): OR
  CIV OC is in maintenance such that the pressure boundary is maintained (still closed system OC):

OR

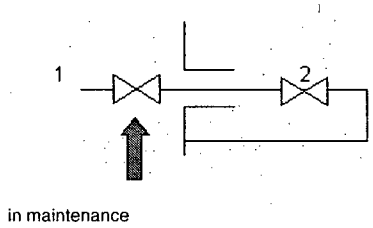

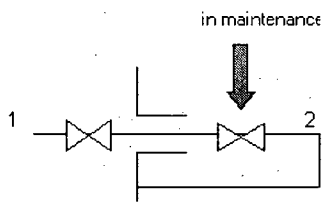

Key modeling details:

a,c

[ ]

FINAL CT EXTENSION for valves 1 or 2, for SOV type: 72 hours (limited by ICLERP)

- CIV OC is in maintenance such that the pressure boundary is NOT maintained (becomes open system OC):

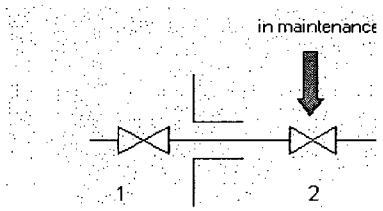

Key modeling details:

a,c

[ ]

a,c

[ ]

FINAL CT EXTENSION for valve 2, for SOV type: 24 hours, (limited by ICLERP)

Calculation Number 6, Group I,C - 2 valves - normally open - different valve type (see Table 8-2)

- CIV IC is in maintenance such that the pressure boundary is or is not maintained (open system IC regardless): OR
  CIV OC is in maintenance such that the pressure boundary is maintained (still closed system OC):

OR

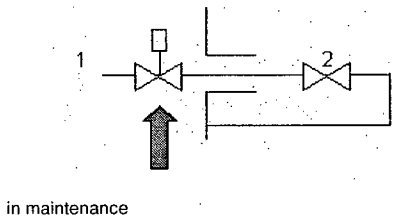

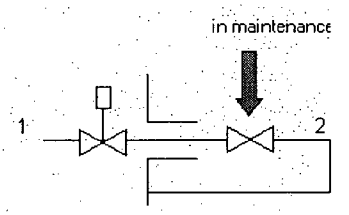

Key modeling details:

a,c

[ ]

a,c

FINAL CT EXTENSION for valves 1 or 2, for SOV type: 168 hours

- CIV OC is in maintenance such that the pressure boundary is NOT maintained (becomes open system OC):

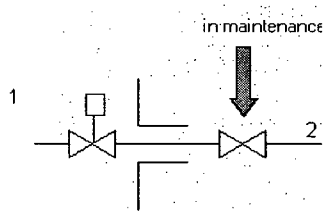

Key modeling details:

a,c

a,c

FINAL CT EXTENSION for valve 2, for SOV type: 168 hours

8.2.2.4 Group ID: Flow paths closed inside containment and closed outside containment

Calculation Number 1, Group I,D - 2 valves - normally closed - different valve type (see Table 8-2)

- CIV OC is in maintenance such that the pressure boundary is maintained (still closed system OC): OR
  CIV IC is in maintenance such that the pressure boundary is maintained (still closed system IC):

OR

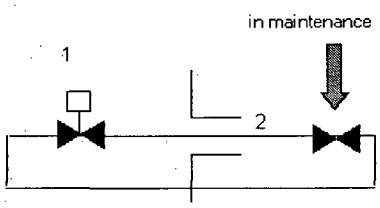

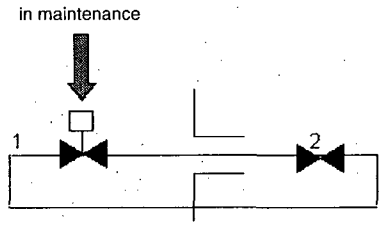

Key modeling details:

a,c

a,c

FINAL CT EXTENSION for valves 2 or 1, for any type: 168 hours

- CIV OC is in maintenance such that the pressure boundary is NOT maintained (becomes open system OC): OR
  CIV IC is in maintenance such that the pressure boundary is NOT maintained (becomes open system IC):

OR

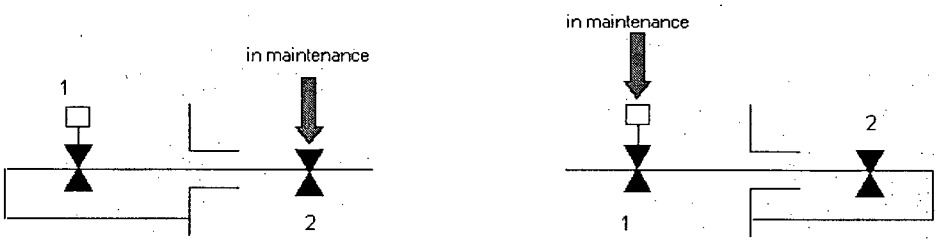

Key modeling details:

a,c

[ ]

FINAL CT EXTENSION for valves 2 or 1, for any type: 168 hours

8.2.3 Class II: Penetration Flow Paths Connected to the RCS

Class II represents those penetrations that are connected to the RCS. Section 8.2.3.1 contains the ICLERP and ΔLERF sample calculations for those RCS systems that are standby, and Section 8.2.3.2 contains the sample calculations for the normally operating systems.

The key basis, assumptions, and diagrams are shown for each penetration analyzed. The calculations were done similar to the calculations for the containment atmosphere connections in Section 8.2.2. That is, the calculations are done first with a CT of 168 hours and if the ICLERP or ΔLERF value at this CT does not meet the criteria in Regulatory Guides 1.174 and 1.177, the ICLERP and/or ΔLERF were

recalculated at 72, 48, 24, 12, or 8 hour CTs until the criteria were met. The sample calculations provided in Sections 8.2.3.1 and 8.2.3.2 reflect only valve failure probabilities for SOVs. These calculations are provided for a representative number of penetration configurations. Detailed analyses were completed for all penetration configurations. Those not provided followed the approach demonstrated in the sample calculations. Table 8-3 summarizes the Class II results which contain calculations for all valve types (SOVs, MOVs, AOVs, check valves, and SRVs as appropriate).

For penetrations connected to the RCS there are four potential means to get a large release. These are:

- Probability of 'ISLOCA Release': For all systems that are connected to the RCS and open outside containment, if the CIVs fail (CIV failure is the initiating event), an interfacing systems LOCA would occur, resulting in core damage and a release due to containment bypass.

  Example: isolation valves fail, core damage results; direct release path from RCS to outside environment.

  Required input: valve failure probability

- Probability of 'Non Seismic CDF Release' (release due to internal event CDF): For systems that are connected to the RCS and open outside containment, if a core damage event occurs and penetration isolation fails, then there is an open release path from the RCS to the outside environment.

  Example: core damage occurs, the isolation valves fail (spuriously open or fail to close); direct release path into the outside environment.

  Required input: CDF_T, valve failure probability, CT

- Probability of 'Random Pipe Break CDF Release' (releases due to internal event CDF plus random pipe break): For systems connected to the RCS and open outside containment, if a core damage event occurs, and then a random pipe break were to occur inside containment causing the system inside to no longer be connected to the RCS, and the CIVs were to fail, then an open path through containment would exist.

  Example: core damage occurs, random pipe break occurs inside containment, the isolation valves fail; direct release path from inside containment to the outside environment.

  Required input: CDF_T, PB_{random}, valve failure probability, CT

- Probability of 'Seismic CDF Release': For systems connected to the RCS and open outside containment, it is assumed that if a core damage event occurs due to a seismic event, all closed loop piping fails both inside and outside containment, creating an open system connection both inside and outside containment. If a CIV failure were to occur in addition to this, then an open path through containment would exist.

Example: core damage due to a seismic event occurs, pipe breaks occur also due to the seismic event, the isolation valves fail; direct release path through the now open systems both inside and outside containment.

Required input: CDF_{seis}, PB_{seis}, valve failure probability, CT

Basis and Assumptions

- For all standby systems (not running during normal operation), the system is considered 'closed' inside containment and not actively connected to the RCS if there is a closed valve between the RCS and the inside containment CIV. The system is considered 'closed' outside containment if there is an extra closed valve before the outside containment CIV, and if the piping from the RCS to the extra closed valve outside containment is qualified for high RCS pressures. See Figure 8-1.

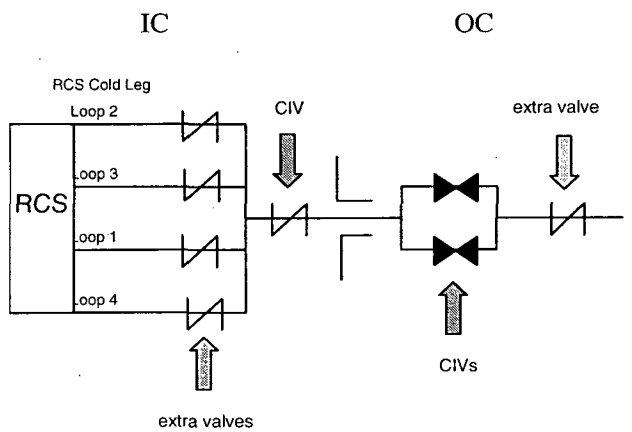

Figure 8-1 – Closed System Inside and Outside Containment

- In the case in which there is a closed system both inside and outside containment, such as that shown above in Figure 8-1, the probability of a non-seismic and/or ISLOCA CDF release is extremely small, and thus neglected, due to the large number of normally closed valves available to isolate the penetration. Also, the probability of a random pipe break occurring inside and outside containment simultaneously, causing both closed systems inside and outside to become open, is very small and is also neglected. All piping between the RCS and the extra closed valve outside containment must be qualified for high RCS pressures.

- For RCS connections, during seismic and random pipe breaks, it is assumed that the piping fails between the CIV and the extra valve. The portion of piping between the CIV and the containment wall is part of the break exclusion zone (as explained in Note 2 of Table 8-1), and therefore is assumed to remain intact while other piping fails. This assumption eliminates crediting the 'extra valves' to isolate the penetration.

- Lines connected to the RCS 3/8" in diameter or less are within the makeup capability of plant's charging systems, and therefore, are not considered small LOCAs or potential containment bypass pathways.

- For all RCS connections, in which there are two valves of the same type (usually check valves), in series inside containment, before the RCS, common cause failure does not apply because the valves are operating under different conditions. The valve closer to the RCS is subject to a higher pressure than the valve downstream of it.

- For the 'probability of an ISLOCA Release' portion of the ΔLERF calculations, when there is a normally open valve in the penetration (such as in group II-A, calculations 6 and 7) the open valve is not credited in the calculation. When assessing ISLOCA, the initiating event is the frequency of the closed valves within the path of release spuriously transferring open or rupturing, thus creating a flow path directly from the RCS to the outside atmosphere.

- For all RCS connections that are normally operating, the probability of an ISLOCA release is not considered because the valves are already open and flow is occurring.

Table 8-3 Generic Summary: Class II – Penetration Flow Paths Connected to the RCS

Calculation Number and Group	Penetration Description	Maintenance Description	Diagram	Valve Type Basis (see item 7 of Section 8.2)	Justified CT (hours)
1. Group II,A (see Section 8.2.3.1)	ECCS Test Line Return - High Pressure Coolant Injection System: • 2 valves OC in parallel, normally closed, different valve types - 1 valve IC, normally closed - orifice between RCS and IC CIV 3/8" or less diameter (The valve IC has additional normally closed valves between it and the RCS, Note: path 2 is eliminated)	'different type' CIV OC is in maintenance such that the pressure boundary is or is not maintained (open system OC regardless):	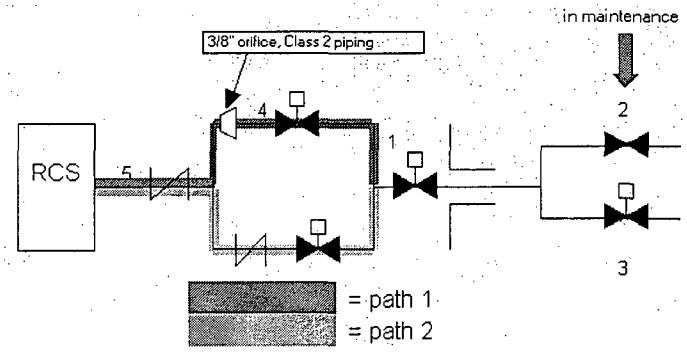	all	168
		'same type' CIV OC is in maintenance such that the pressure boundary is or is not maintained (open system OC regardless):	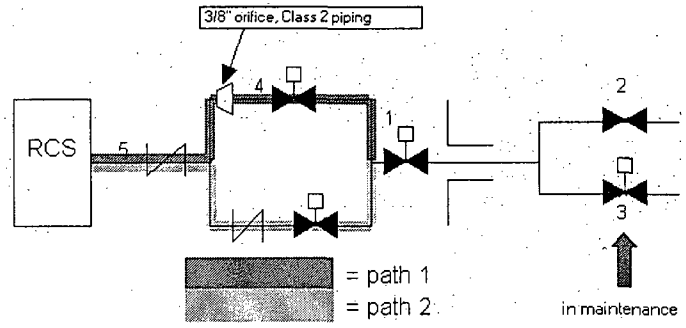	all	168

Table 8-3 (cont.) Generic Summary: Class II – Penetration Flow Paths Connected to the RCS

Calculation Number and Group	Penetration Description	Maintenance Description	Diagram	Valve Type Basis (see item 7 of Section 8.2)	Justified CT (hours)
		CIV IC is in maintenance such that the pressure boundary is maintained (still closed system IC):	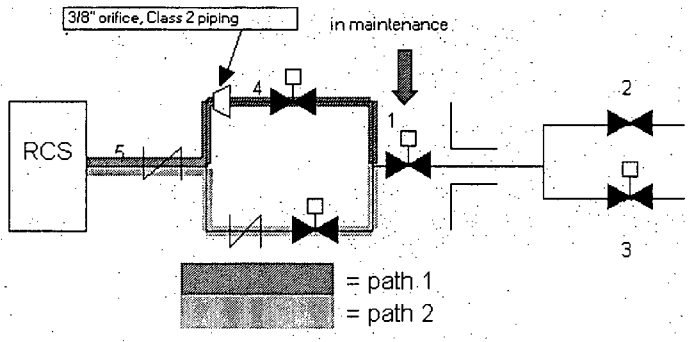	all	168
		CIV IC is in maintenance such that the pressure boundary is NOT maintained (becomes open system IC):	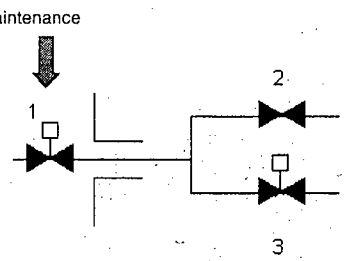	all	24

Table 8-3 (cont.) Generic Summary: Class II – Penetration Flow Paths Connected to the RCS

Calculation Number and Group	Penetration Description	Maintenance Description	Diagram	Valve Type Basis (see item 7 of Section 8.2)	Justified CT (hours)
2. Group II,A (see Section 8.2.3.1)	Pressurizer Vapor Sample Line: • 2 valves OC in parallel, normally closed, different valve types - 1 valve IC, normally closed - 3/8" or less piping diameter	'different type' CIV OC is in maintenance such that the pressure boundary is or is not maintained (open system OC regardless):	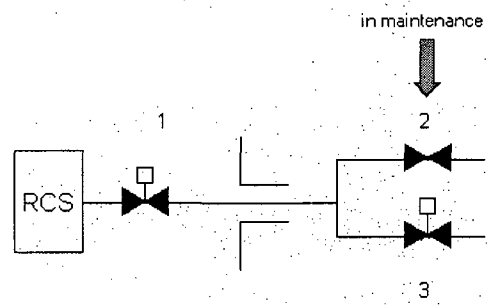	all	168
		'same type' CIV OC is in maintenance such that the pressure boundary is or is not maintained (open system OC regardless):	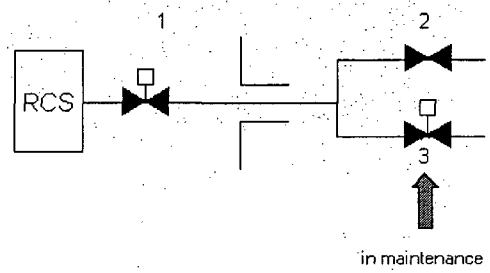	all	24
		CIV IC is in maintenance such that the pressure boundary is maintained (still closed system IC):	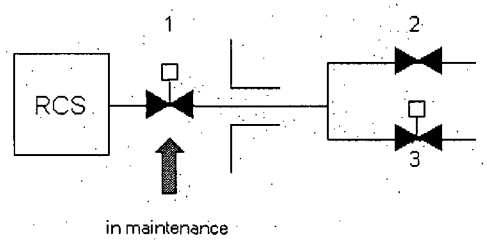	all	24

Table 8-3 (cont.) Generic Summary: Class II – Penetration Flow Paths Connected to the RCS

Calculation Number and Group	Penetration Description	Maintenance Description	Diagram	Valve Type Basis (see item 7 of Section 8.2)	Justified CT (hours)
		CIV IC is in maintenance such that the pressure boundary is NOT maintained (becomes open system IC):	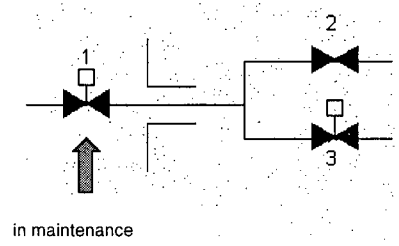	all	24
3. Group II,A (see Section 8.2.3.1)	Pressurizer Liquid Sample Line: • 3 valves OC in parallel, 2 normally closed, 1 normally open - 1 valve IC normally open - 3/8" or less piping diameter	either of the closed CIVs OC is in maintenance such that the pressure boundary is or is not maintained (open system OC regardless):	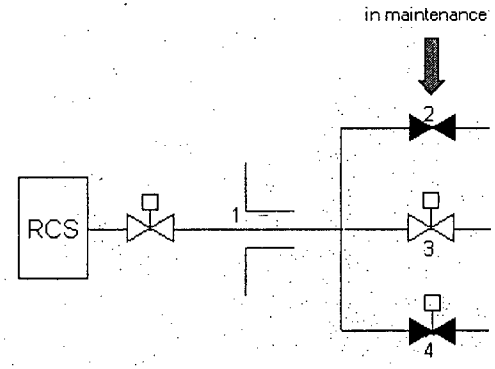	SOV MOV AOV Check	168 168 168 168
		open CIV OC is in maintenance such that the pressure boundary is or is not maintained (open system OC regardless):	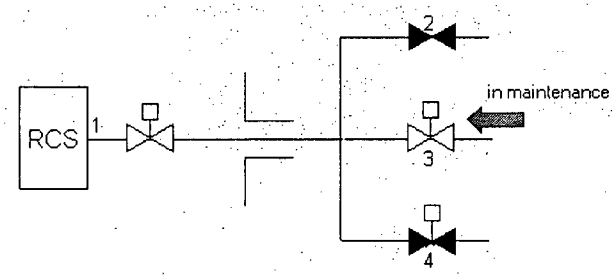	SOV MOV AOV Check	24 24 24 24

Table 8-3 (cont.) Generic Summary: Class II – Penetration Flow Paths Connected to the RCS

Calculation Number and Group	Penetration Description	Maintenance Description	Diagram	Valve Type Basis (see item 7 of Section 8.2)	Justified CT (hours)
		open CIV IC is in maintenance such that the pressure boundary is maintained (still closed system IC):	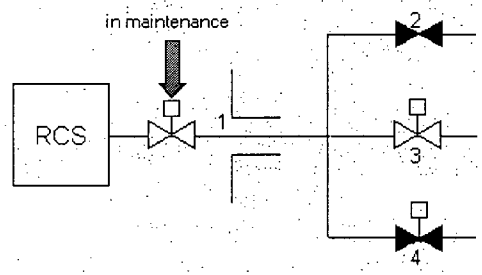	SOV MOV AOV Check	24 24 24 24
		open CIV IC is in maintenance such that the pressure boundary is NOT maintained (becomes open system IC):	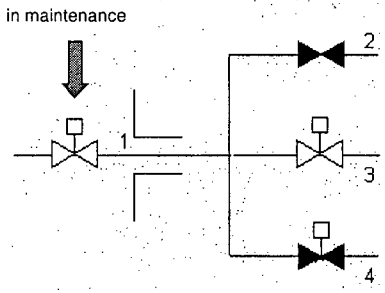	SOV MOV AOV Check	24 24 24 24

Table 8-3 (cont.) Generic Summary: Class II – Penetration Flow Paths Connected to the RCS

Calculation Number and Group	Penetration Description	Maintenance Description	Diagram	Valve Type Basis (see item 7 of Section 8.2)	Justified CT (hours)
4. Group II,A (see Section 8.2.3.1)	Post Accident Sample Line: • 3 valves OC in parallel, normally closed, different valve types - 1 valve IC, normally closed 3/8" or less piping diameter	either 'same type' CIV OC is in maintenance such that the pressure boundary is or is not maintained (open system OC regardless):	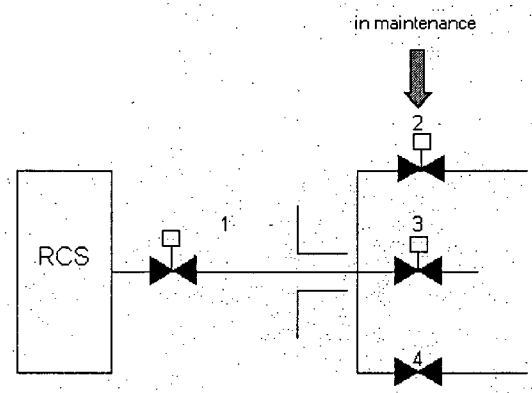	all	168
		'different type' CIV OC is in maintenance such that the pressure boundary is or is not maintained (open system OC regardless):	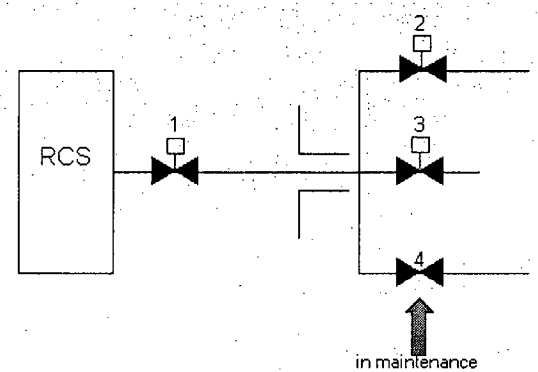	all	168

Table 8-3 (cont.) Generic Summary: Class II – Penetration Flow Paths Connected to the RCS

Calculation Number and Group	Penetration Description	Maintenance Description	Diagram	Valve Type Basis (see item 7 of Section 8.2)	Justified CT (hours)
		CIV IC is in maintenance such that the pressure boundary is maintained (still closed system IC):	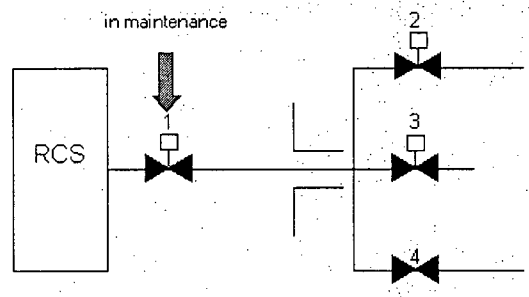	all	12
		CIV IC is in maintenance such that the pressure boundary is NOT maintained (becomes open system IC):	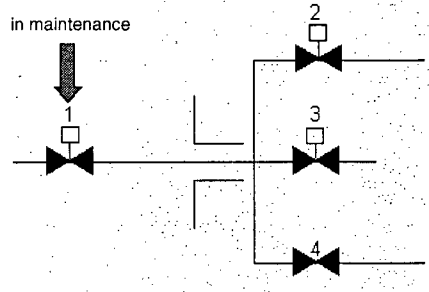	all	12

Table 8-3 (cont.) Generic Summary: Class II – Penetration Flow Paths Connected to the RCS

Calculation Number and Group	Penetration Description	Maintenance Description	Diagram	Valve Type Basis (see item 7 of Section 8.2)	Justified CT (hours)
5. Group II,A (see Section 8.2.3.1)	Residual Heat Removal System (Low Head) - Hot Leg Injection, Recirc to Hot Leg: OR Safety Injection Pump (Intermediate Head) - Hot Leg Injection, Recirc to Hot Leg: • 2 valves IC in parallel, normally closed - 2 valve OC in parallel, normally closed - different valve types (Each check valve IC has a normally closed check valve in series with it)	either CIV OC is in maintenance such that the pressure boundary is or is not maintained (open system OC regardless):	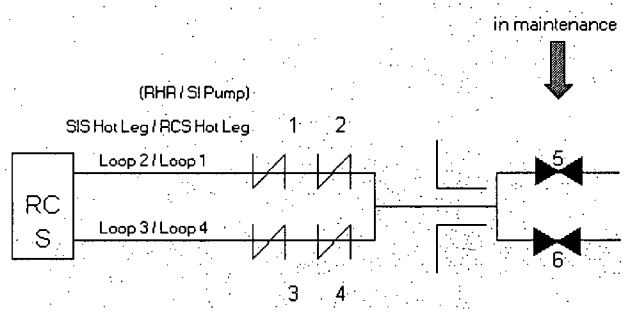	all	72
		either CIV IC is in maintenance such that the pressure boundary is maintained (still closed system IC):	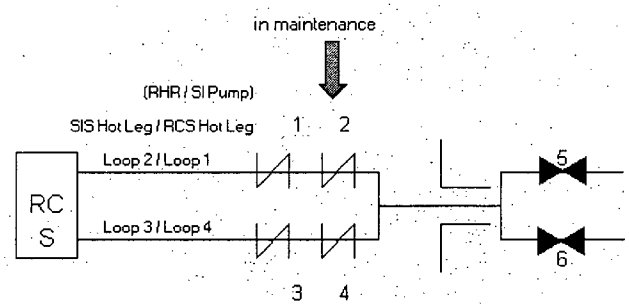	all	72

Table 8-3 (cont.) Generic Summary: Class II – Penetration Flow Paths Connected to the RCS

Calculation Number and Group	Penetration Description	Maintenance Description	Diagram	Valve Type Basis (see item 7 of Section 8.2)	Justified CT (hours)
		either CIV IC is in maintenance such that the pressure boundary is NOT maintained (becomes open system IC):	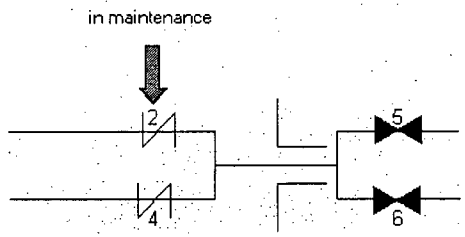	all	168
6. Group II,A (see Section 8.2.3.1)	Residual Heat Removal System (Low Head) - Cold Leg Injection, Recirc to Cold Leg: • 2 valves IC in parallel, normally closed - 2 valves OC in parallel, 1 normally closed, 1 normally open - different valve types (Each check valve IC has a normally closed check valve in series with it)	the closed CIV OC is in maintenance such that the pressure boundary is or is not maintained (open system OC regardless):	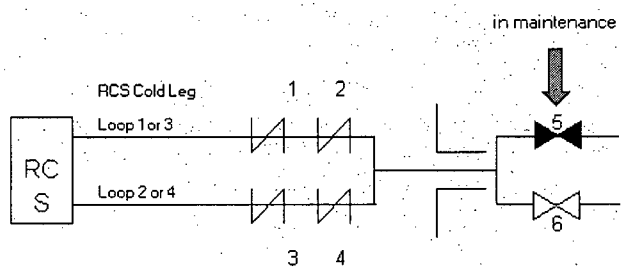	SOV MOV AOV Check	4 4 4 4
		the open CIV OC is in maintenance such that the pressure boundary is or is not maintained (open system OC regardless):	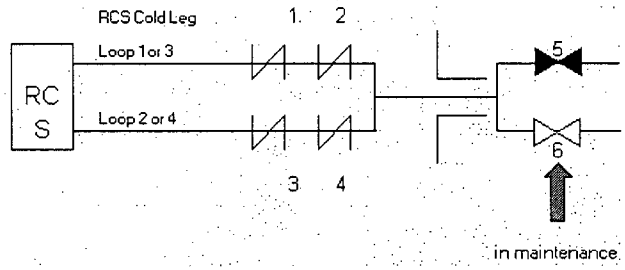	SOV MOV AOV Check	4 4 4 4

Table 8-3 (cont.) Generic Summary: Class II – Penetration Flow Paths Connected to the RCS

Calculation Number and Group	Penetration Description	Maintenance Description	Diagram	Valve Type Basis (see item 7 of Section 8.2)	Justified CT (hours)
		either CIV IC is in maintenance such that the pressure boundary is maintained (still closed system IC):	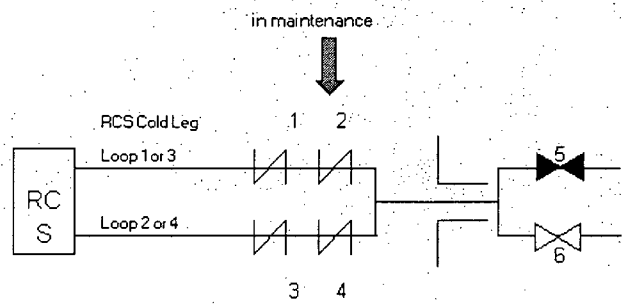	SOV MOV AOV Check	4 4 4 4
		either CIV IC is in maintenance such that the pressure boundary is NOT maintained (becomes open system IC):	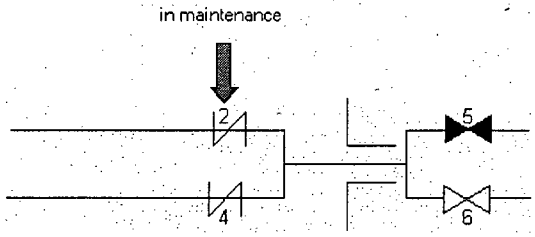	SOV MOV AOV Check	4 4 4 4

Table 8-3 (cont.) Generic Summary: Class II – Penetration Flow Paths Connected to the RCS

Calculation Number and Group	Penetration Description	Maintenance Description	Diagram	Valve Type Basis (see item 7 of Section 8.2)	Justified CT (hours)
7. Group II,A (see Section 8.2.3.1)	Safety Injection Pump (intermediate head) - Cold Leg Injection, Recirc to Cold Leg: • 4 valves IC in parallel, normally closed - 2 valve OC in parallel, 1 normally closed, 1 normally open - different valve type (Each check valve IC has a normally closed check valve in series with it)	closed CIV OC is in maintenance such that the pressure boundary is or is not maintained (open system OC regardless):	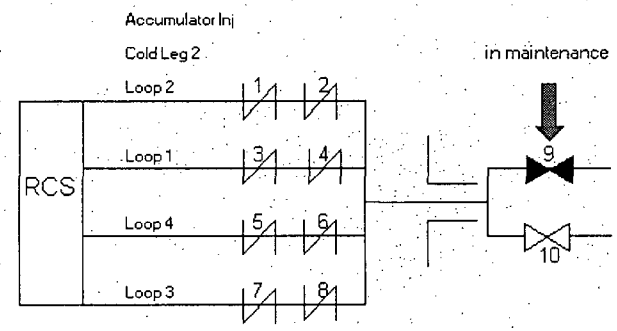	SOV MOV AOV Check	4 4 4 4
		open CIV OC is in maintenance such that the pressure boundary is or is not maintained (closed system OC regardless):	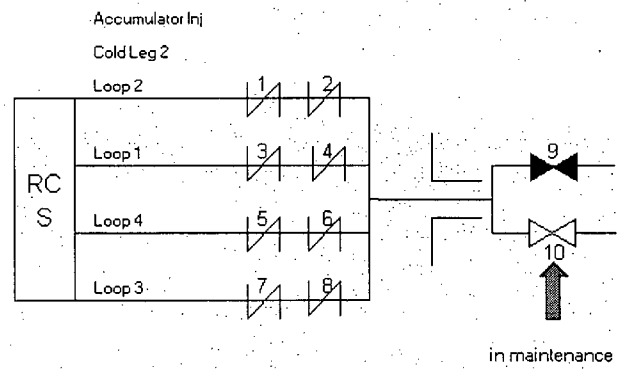	SOV MOV AOV Check	4 4 4 4

Table 8-3 (cont.) Generic Summary: Class II – Penetration Flow Paths Connected to the RCS

Calculation Number and Group	Penetration Description	Maintenance Description	Diagram	Valve Type Basis (see item 7 of Section 8.2)	Justified CT (hours)
		any CIV IC is in maintenance such that the pressure boundary is maintained (still closed system IC):	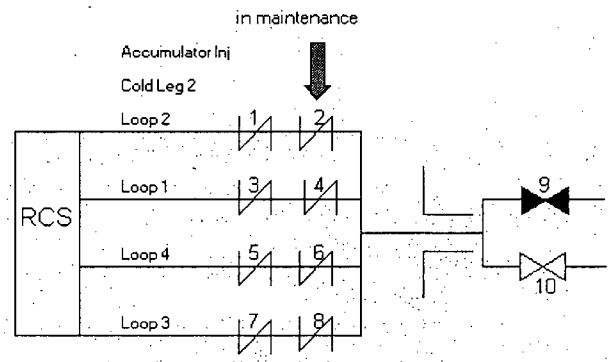	SOV MOV AOV Check	4 4 4 4
		any CIV IC is in maintenance such that the pressure boundary is NOT maintained (becomes open system IC):	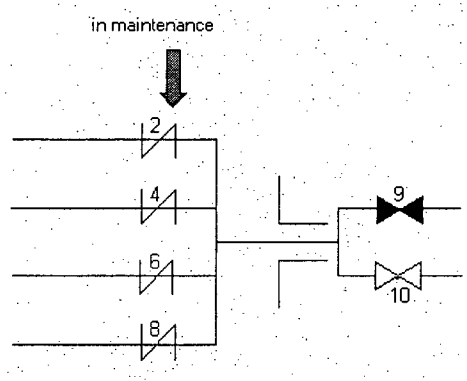	SOV MOV AOV Check	4 4 4 4

Table 8-3 (cont.) Generic Summary: Class II – Penetration Flow Paths Connected to the RCS

Calculation Number and Group	Penetration Description	Maintenance Description	Diagram	Valve Type Basis (see item 7 of Section 8.2)	Justified CT (hours)
8. Group II,A (see Section 8.2.3.1)	Residual Heat Removal System (Low Head) - Hot Leg to RHR Pumps, RHR Shutdown Lines: • 1 valve IC, normally closed	CIV IC is in maintenance such that the pressure boundary is maintained (still closed system IC):	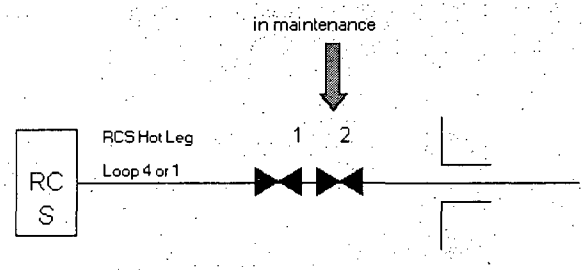	all	4
	(The valve IC has another normally closed valve in series with it)	CIV IC is in maintenance such that the pressure boundary is NOT maintained (becomes open system IC):	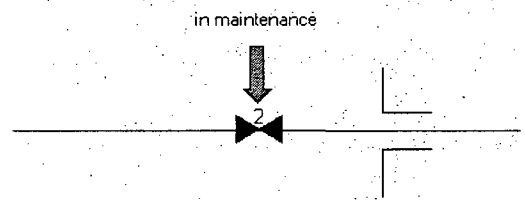	all	4

Table 8-3 (cont.) Generic Summary: Class II – Penetration Flow Paths Connected to the RCS

Calculation Number and Group	Penetration Description	Maintenance Description	Diagram	Valve Type Basis (see item 7 of Section 8.2)	Justified CT (hours)
9. Group II,A (see Section 8.2.3.1)	RVLIS Sample Line - Reactor Coolant System: • Hydraulic Sensors IC, LIS's OC	either LIS OC is in maintenance such that the pressure boundary is or is not maintained:	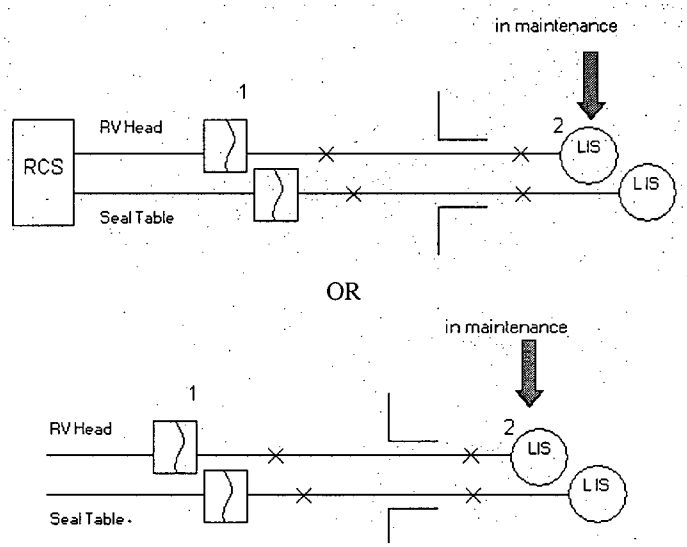	LISs	168

Table 8-3 (cont.) Generic Summary: Class II – Penetration Flow Paths Connected to the RCS

Calculation Number and Group	Penetration Description	Maintenance Description	Diagram	Valve Type Basis (see item 7 of Section 8.2)	Justified CT (hours)
		either sensor IC is in maintenance such that the pressure boundary is or is not maintained:	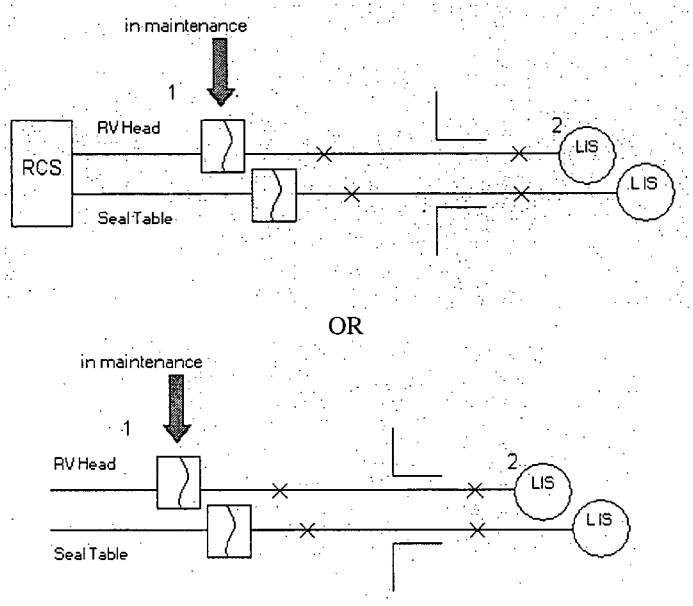	sensors	168

Table 8-3 (cont.) Generic Summary: Class II – Penetration Flow Paths Connected to the RCS

Calculation Number and Group	Penetration Description	Maintenance Description	Diagram	Valve Type Basis (see item 7 of Section 8.2)	Justified CT (hours)
10. Group II,A (see Section 8.2.3.1)	Centrifugal Charging Pumps (High Head) - Recirc to Hot Legs: • 3 valves of same type IC in parallel, normally closed - 1 valve OC, normally closed - valves IC different type from those OC (Each check valve IC has a normally closed check valve in series with it)	the CIV OC is in maintenance such that the pressure boundary is or is not maintained (open system OC regardless):	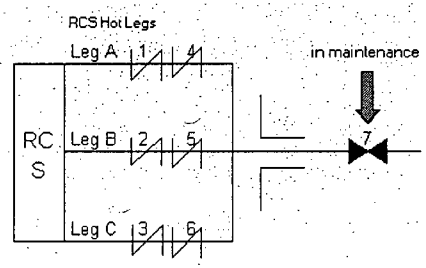	all	72
		any CIV IC is in maintenance such that the pressure boundary is maintained (still closed system IC):	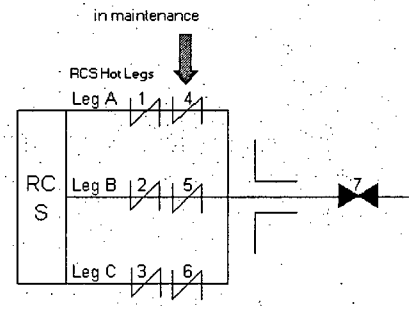	all	168
		any CIV IC is in maintenance such that the pressure boundary is NOT maintained (becomes open system IC):	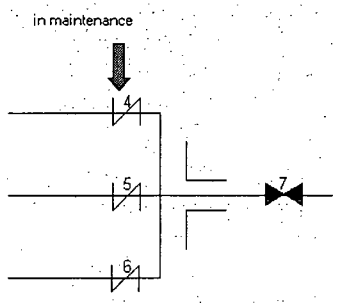	all	168

Table 8-3 (cont.) Generic Summary: Class II – Penetration Flow Paths Connected to the RCS

Calculation Number and Group	Penetration Description	Maintenance Description	Diagram	Valve Type Basis (see item 7 of Section 8.2)	Justified CT (hours)
11. Group II,A (see Section 8.2.3.1)	Centrifugal Charging Pumps (High Head) - Cold Leg Injection, Recirc to Cold Legs: • 1 valve IC, normally closed - 2 valves of same valve type OC in parallel, both normally closed - valve IC different type from those OC (The check valve IC has 4 parallel normally closed check valves in series with it) (The valves OC have another normally closed check valve in series with them)	either CIV OC is in maintenance such that the pressure boundary is maintained (still closed system OC):	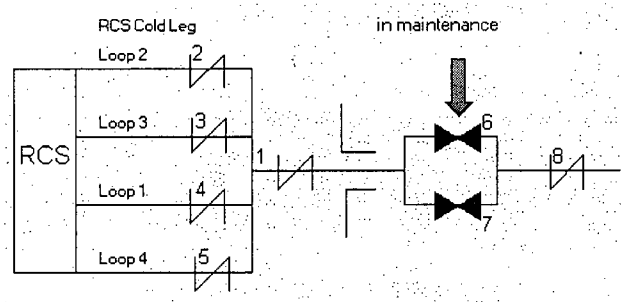	all	168
		either CIV OC is in maintenance such that the pressure boundary is NOT maintained (becomes open system OC):	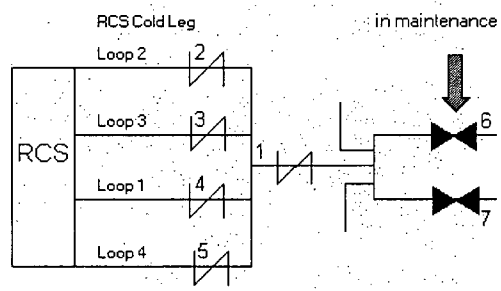	all	168

Table 8-3 (cont.) Generic Summary: Class II – Penetration Flow Paths Connected to the RCS

Calculation Number and Group	Penetration Description	Maintenance Description	Diagram	Valve Type Basis (see item 7 of Section 8.2)	Justified CT (hours)
		CIV IC is in maintenance such that the pressure boundary is maintained (still closed system IC):	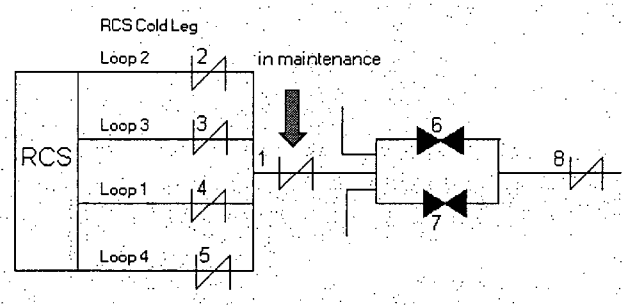	all	168
		CIV IC is in maintenance such that the pressure boundary is NOT maintained (becomes open system IC):	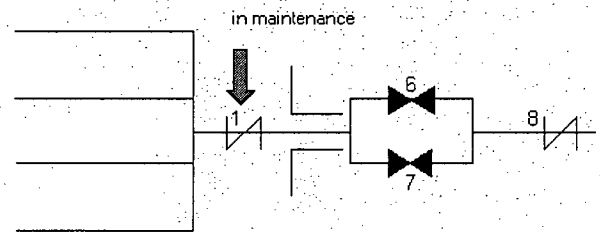	all	168

Table 8-3 (cont.) Generic Summary: Class II – Penetration Flow Paths Connected to the RCS

Calculation Number and Group	Penetration Description	Maintenance Description	Diagram	Valve Type Basis (see item 7 of Section 8.2)	Justified CT (hours)
12. Group II,A (see Section 8.2.3.1)	Centrifugal Charging Pumps (High Head) - Injection to Cold Legs, Recirc to Cold Legs: • 3 valves of same type IC in parallel, normally closed - 2 valves of same valve type OC in parallel, normally closed - valves IC different type from those OC (Each check valve IC has a normally closed check valve in series with it) (The valves OC have another normally closed check valve in series with them)	either CIV OC is in maintenance such that the pressure boundary is maintained (still closed system OC):	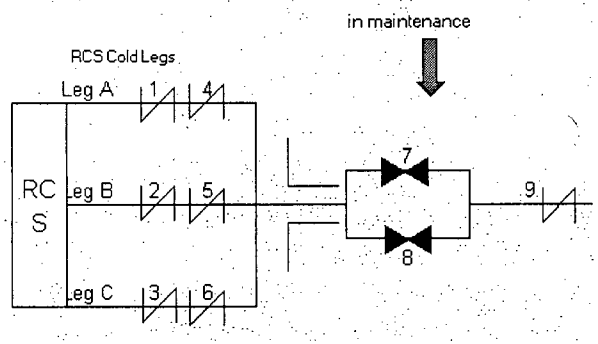	all	168
		either CIV OC is in maintenance such that the pressure boundary is NOT maintained (becomes open system OC):	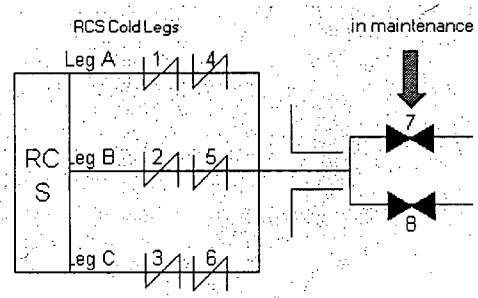	all	168

Table 8-3 (cont.) Generic Summary: Class II – Penetration Flow Paths Connected to the RCS

Calculation Number and Group	Penetration Description	Maintenance Description	Diagram	Valve Type Basis (see item 7 of Section 8.2)	Justified CT (hours)
		any CIV IC is in maintenance such that the pressure boundary is maintained (still closed system IC):	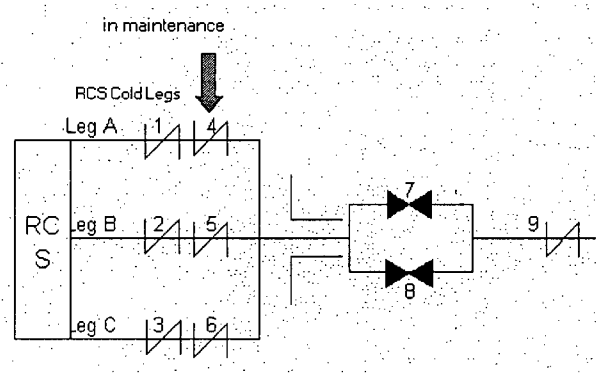	all	168
		any CIV IC is in maintenance such that the pressure boundary is NOT maintained (becomes open system IC):	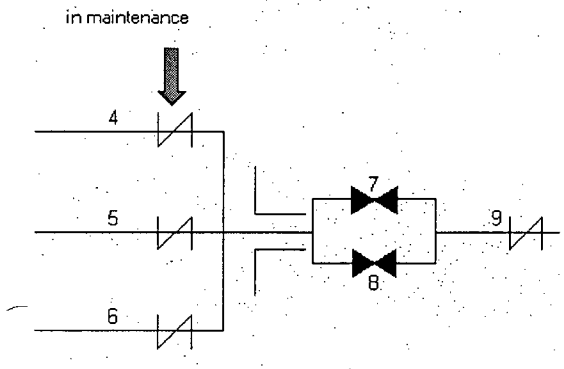	all	168

Table 8-3 (cont.) Generic Summary: Class II – Penetration Flow Paths Connected to the RCS

Calculation Number and Group	Penetration Description	Maintenance Description	Diagram	Valve Type Basis (see item 7 of Section 8.2)	Justified CT (hours)
1. Group II,B (see Section 8.2.3.2)	Chemical & Volume Control System - Normal Letdown Legs: • 1 valve IC, normally open - 2 valves OC, 1 normally open, 1 normally closed - same valve type	the open CIV OC is in maintenance such that the pressure boundary is or is not maintained (open system OC regardless):	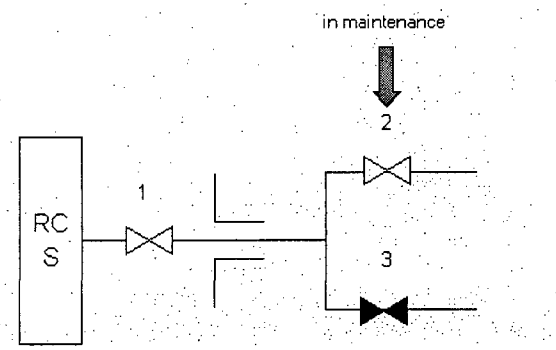	SOV MOV AOV Check	24 24 24 24
		the closed CIV OC is in maintenance such that the pressure boundary is or is not maintained (open system OC regardless):	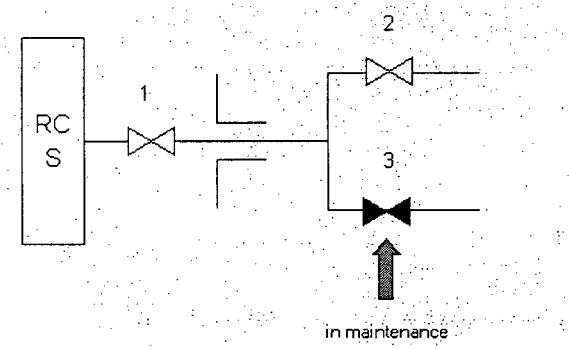	SOV MOV AOV Check	72 168 72 168

Table 8-3 (cont.) Generic Summary: Class II – Penetration Flow Paths Connected to the RCS

Calculation Number and Group	Penetration Description	Maintenance Description	Diagram	Valve Type Basis (see item 7 of Section 8.2)	Justified CT (hours)
		the open CIV IC is in maintenance such that the pressure boundary is maintained (still closed system IC):	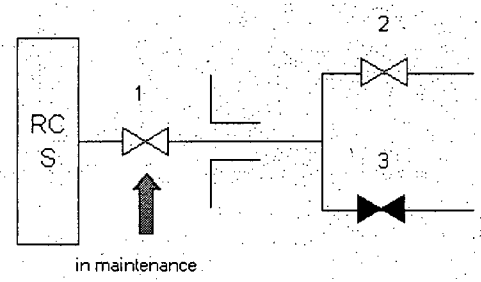	SOV MOV AOV Check	24 24 24 24
		the open CIV IC is in maintenance such that the pressure boundary is NOT maintained (becomes open system IC):	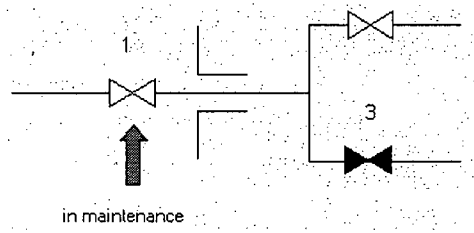	SOV MOV AOV Check	24 24 24 24
2. Group II,B (see Section 8.2.3.2)	Chemical & Volume Control System – Reactor Coolant to Letdown Heat Exchanger: • 3 valves IC, 1 normally open, 2 normally closed - 1 valve OC, normally open - all same valve type	the CIV OC is in maintenance such that the pressure boundary is or is not maintained (open system OC regardless):	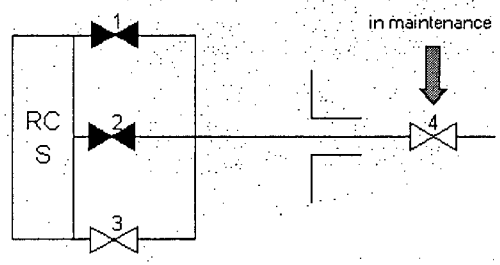	SOV MOV AOV Check	24 24 24 24

Table 8-3 (cont.) Generic Summary: Class II – Penetration Flow Paths Connected to the RCS

Calculation Number and Group	Penetration Description	Maintenance Description	Diagram	Valve Type Basis (see item 7 of Section 8.2)	Justified CT (hours)
		the open CIV IC is in maintenance such that the pressure boundary is maintained (still closed system IC):	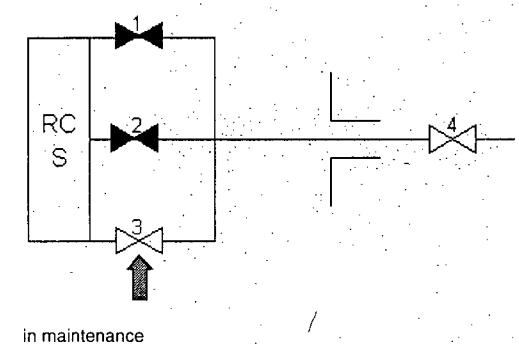	SOV MOV AOV Check	24 24 24 24
		the open CIV IC is in maintenance such that the pressure boundary is NOT maintained (becomes open system IC):	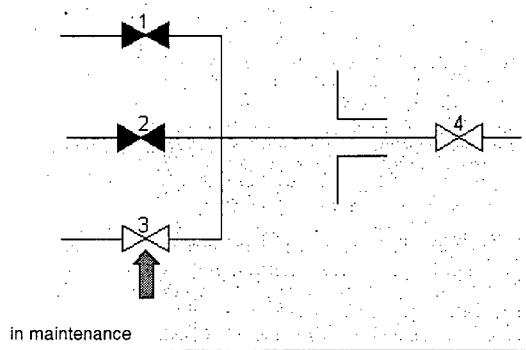	SOV MOV AOV Check	24 24 24 24

Table 8-3 (cont.) Generic Summary: Class II – Penetration Flow Paths Connected to the RCS

Calculation Number and Group	Penetration Description	Maintenance Description	Diagram	Valve Type Basis (see item 7 of Section 8.2)	Justified CT (hours)
		either of the closed CIVs IC are in maintenance such that the pressure boundary is maintained (still closed system IC):	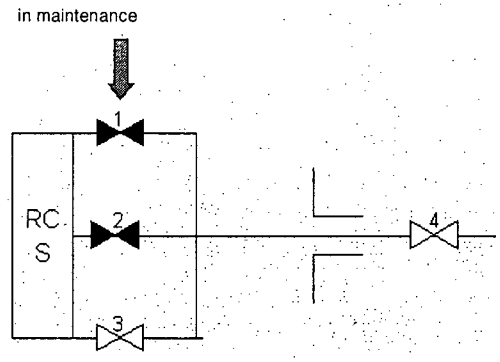	SOV MOV AOV Check	72 168 72 168
		either of the closed CIVs IC are in maintenance such that the pressure boundary is NOT maintained (becomes open system IC):	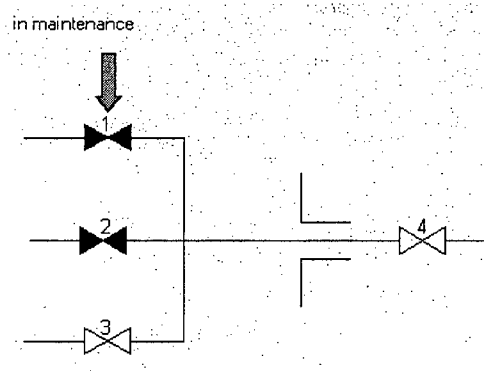	SOV MOV AOV Check	168 168 168 168

Table 8-3 (cont.) Generic Summary: Class II – Penetration Flow Paths Connected to the RCS

Calculation Number and Group	Penetration Description	Maintenance Description	Diagram	Valve Type Basis (see item 7 of Section 8.2)	Justified CT (hours)
3. Group II,B (see Section 8.2.3.2)	Chemical & Volume Control System - Charging Line: • 1 CIV IC normally open - 1 CIV OC, normally open - different valve types (The normally open check valve IC has another normally open check valve in series between it and the RCS) (The normally open CIV OC has another normally open valve downstream of it, same valve type)	the CIV OC is in maintenance such that the pressure boundary is maintained (still closed system OC):	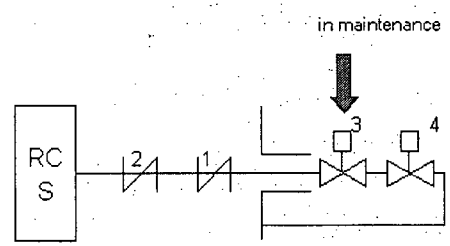	SOV MOV AOV Check	168 168 168 168
		the CIV OC is in maintenance such that the pressure boundary is NOT maintained (becomes open system OC):	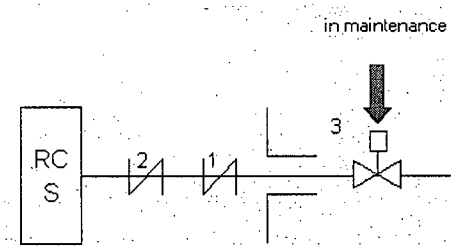	SOV MOV AOV Check	168 168 168 168
		the CIV IC is in maintenance such that the pressure boundary is maintained (still closed system IC):	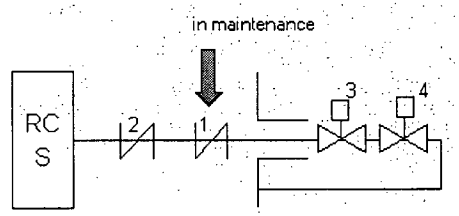	SOV MOV AOV Check	168 168 168 168

Table 8-3 (cont.) Generic Summary: Class II – Penetration Flow Paths Connected to the RCS					
Calculation Number and Group	**Penetration Description**	**Maintenance Description**	**Diagram**	**Valve Type Basis** (see item 7 of Section 8.2)	**Justified CT (hours)**
		the CIV IC is in maintenance such that the pressure boundary is NOT maintained (becomes open system IC):	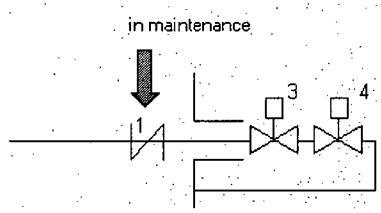	SOV MOV AOV Check	168 168 168 168

8.2.3.1 Group IIA: Standby system flow paths

Calculation Number 2, Group II,A - Pressurizer Vapor Sample Line (see Table 8-3)

2 valves OC in parallel, normally closed, different valve types - 1 valve IC, normally closed - 3/8" or less piping diameter

- 'different type' CIV OC is in maintenance such that the pressure boundary is or is not maintained (open system OC regardless):

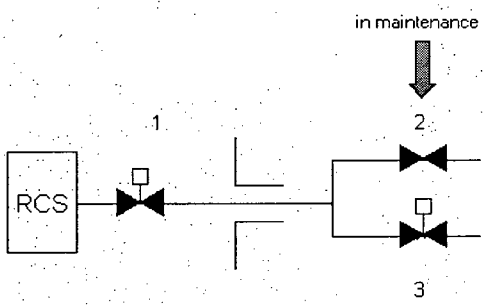

Key modeling details:

a,c

[ ]

a,c

[ ]

FINAL CT EXTENSION for valve 2, for any valve type: 168 hours

- 'same type' CIV OC is in maintenance such that the pressure boundary is or is not maintained (open system OC regardless):

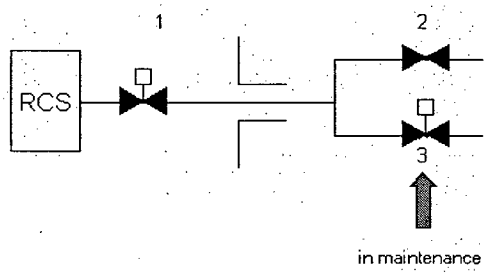

Key modeling details:

a,c

[ ]

a,c

[ ]

FINAL CT EXTENSION for valve 3, for any valve type: 24 hours, (limited by ICLERP)

- CIV IC is in maintenance such that the pressure boundary is maintained (still closed system IC):

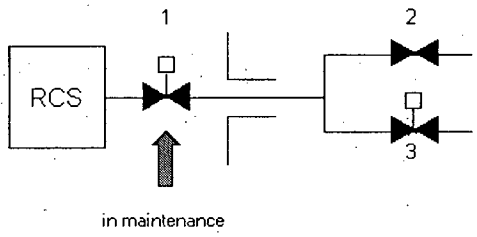

Key modeling details:

a,c

[ ]

FINAL CT EXTENSION for valve 1, for any valve type: 24 hours, (limited by ICLERP)

- CIV IC is in maintenance such that the pressure boundary is NOT maintained (becomes open system IC):

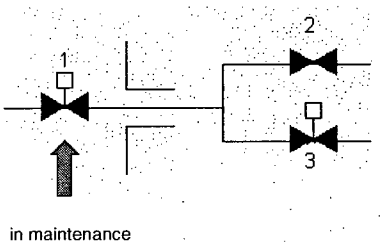

Key modeling details:

a,c

[ ]

a,c

FINAL CT EXTENSION for valve 1, for any valve type: 24 hours, (limited by ICLERP)

NOTE: Since this penetration is no longer connected to the RCS, and because its line size is extremely small, when utilities do a plant implementation of the generic analysis (as demonstrated in Section 9 with WCGS), and apply the appropriate threshold line size value at which a LER will not occur (as specified in Table 8-5 of Section 8.3), this penetration will be justified for a 168 hour CT.

Calculation Number 10, Group II,A - Centrifugal Charging Pumps (High Head): Recirc to Hot Legs (see Table 8-3)

3 valves of same type IC in parallel, normally closed - 1 valve OC, normally closed - valves IC different type from those OC
(Each check valve IC has a normally closed check valve in series with it)

- the CIV OC is in maintenance such that the pressure boundary is or is not maintained (open system OC regardless):

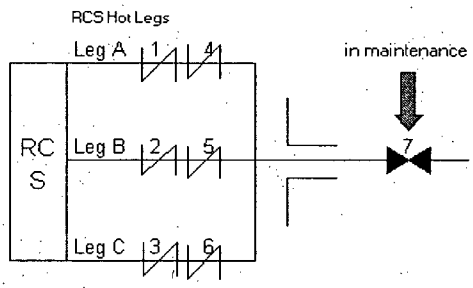

Key modeling details:

a,c

a,c

a,c

a,c

FINAL CT EXTENSION for valve 7, for any valve type: 72 hours, (limited by ICLERP)

- any CIV IC is in maintenance such that the pressure boundary is maintained (still closed system IC):

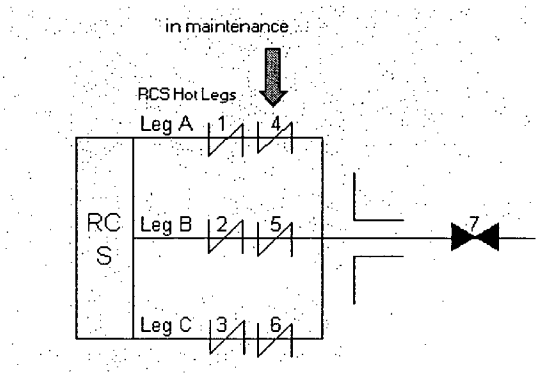

Key modeling details:

a,c

[ ]

a,c

a,c

FINAL CT EXTENSION for valves 4, 5 or 6, for any valve type: 168 hours

- any CIV IC is in maintenance such that the pressure boundary is NOT maintained (becomes open system IC):

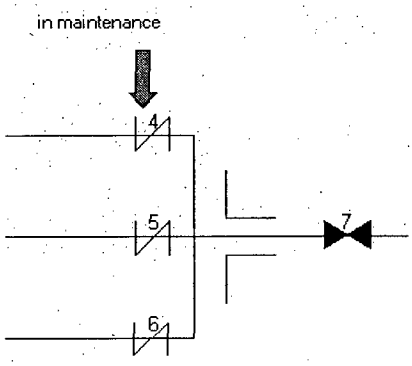

Key modeling details:

a,c

a,c

a,c

[ ]

a,c

FINAL CT EXTENSION for valves 4, 5 or 6, for any valve type: 168 hours

8.2.3.2 Group IIB: Normally operating system flow paths

Calculation Number 1, Group II,B - Chemical & Volume Control System: Normal Letdown Legs (see Table 8-3)

1 valve IC, normally open - 2 valves OC, 1 normally open, 1 normally closed - same valve type

- the open CIV OC is in maintenance such that the pressure boundary is or is not maintained (open system OC regardless):

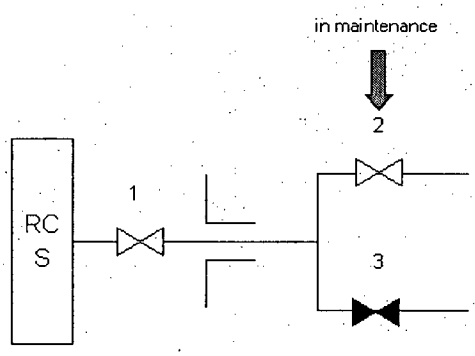

Key modeling details:

a,c

a,c

FINAL CT EXTENSION for valve 2, for SOV type: 24 hours (limited by ICLERP)

- the closed CIV OC is in maintenance such that the pressure boundary is or is not maintained (open system OC regardless):

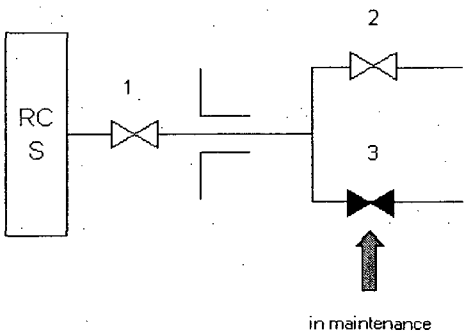

Key modeling details:

a,c

a,c

FINAL CT EXTENSION for valve 3, for SOV type: 72 hours (limited by ICLERP)

- the open CIV IC is in maintenance such that the pressure boundary is maintained (still closed system IC):

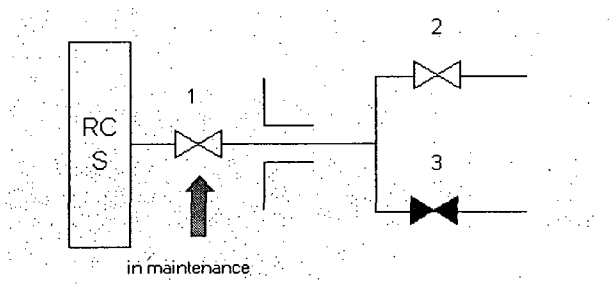

Key modeling details:

a,c

a,c

FINAL CT EXTENSION for valve 1, for SOV type: 24 hours, (limited by ICLERP)

- the open CIV IC is in maintenance such that the pressure boundary is NOT maintained (becomes open system IC):

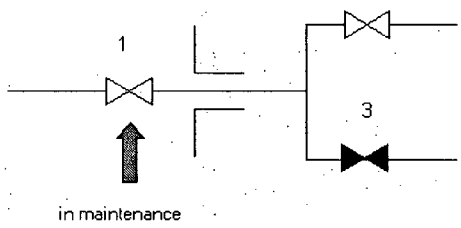

Key modeling details:

a,c

a,c

FINAL CT EXTENSION for valve 1, for SOV type: 24 hours, (limited by ICLERP)

Calculation Number 3, Group II,B - Chemical & Volume Control System: Charging Line (see Table 8-3)

1 CIV IC normally open - 1 CIV OC, normally open - different valve types
(The normally open check valve IC has another normally open check valve in series between it and the RCS)
(The normally open CIV OC has another normally open valve downstream of it, same valve type)

- the CIV OC is in maintenance such that the pressure boundary is maintained (still closed system OC):

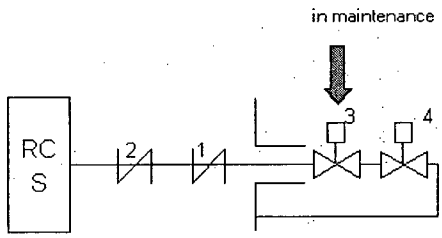

Key modeling details:

a,c

FINAL CT EXTENSION for valve 3, for SOV type: 168 hours

- the CIV OC is in maintenance such that the pressure boundary is NOT maintained (becomes open system OC):

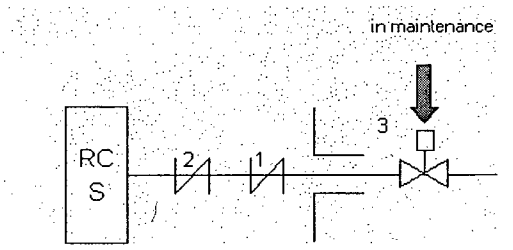

Key modeling details:

a,c

[ ]

a,c

FINAL CT EXTENSION for valve 3, for SOV type: 168 hours

- the CIV IC is in maintenance such that the pressure boundary is maintained (still closed system IC):

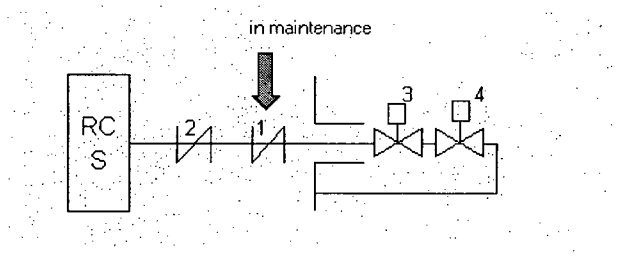

Key modeling details:

a,c

a,c

FINAL CT EXTENSION for valve 1, for SOV type: 168 hours

- the CIV IC is in maintenance such that the pressure boundary is NOT maintained (becomes open system IC):

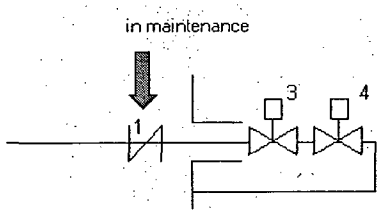

Key modeling details:

a,c

a,c

FINAL CT EXTENSION for valve 1, for SOV type: 168 hours

8.2.4 Class III: Penetration Flow Paths Connected to the SGs

Class III represents those penetrations that are connected to the Steam Generator Secondary Side. The ICLERP and ΔLERF calculations for steam generator connections that are open to the outside environment are in Section 8.2.4.1. The calculations for the steam generator connections that are closed to the outside environment are in Section 8.2.4.2.

Similar to Sections 8.2.2 and 8.2.3 (Class I and Class II penetrations), basis, assumptions and diagrams are shown for each penetration analyzed. The methodology in the calculations is also consistent with Classes I and II such that the calculations are done first with a CT of 168 hours. If the ICLERP or ΔLERF value at this CT does not meet the criteria in Regulatory Guides 1.174 and 1.177, the ICLERP and ΔLERF values were recalculated at lesser CTs. The sample calculations provided in Sections 8.2.4.1 and 8.2.4.2 reflect only valve failure probabilities for SOVs. Table 8-4 summarizes the Class III results which contain calculations for all valve types (SOVs, MOVs, AOVs, check valves, and SRVs, as appropriate).

For penetrations with systems connected to the SG secondary side there are four potential means to get a large release. These are:

- Probability of 'SGTR CDF Release': For systems that are connected to the steam generator secondary side and open to the outside atmosphere, it is assumed that if a core damage event due to Steam Generator Tube Rupture (SGTR) occurs and the CIVs, for SG-related penetrations, fail to isolate, then there is a release path between the SG, and the outside environment. It is acknowledged that in many cases the rupture SG tube will also provide a release path. This analysis conservatively assumes that isolation of penetrations connected to the SG secondary side is also required.

  Example: core damage due to SGTR occurs, the isolation valves fail (spuriously open or fail to close); direct release path into the outside environment.

  Required input: CDF_{SGTR}, valve failure, CT

- Probability of 'Random Pipe Break CDF Release' (releases due to internal event CDF plus random pipe break): For systems connected to the SG and open outside containment, it is assumed that if a core damage event occurs, and then a random pipe break were to occur inside containment causing the system inside to no longer be connected to the SG, and the CIVs were to fail, then an open path through containment would exist.

  Example: core damage occurs, random pipe break occurs inside containment, the isolation valves fail; direct release path from inside containment to the outside environment.

  Required input: CDF_T, PB_{random}, valve failure, CT

- Probability of 'Seismic CDF Release': For systems connected to the SG and open or closed outside containment, it is assumed that if a core damage event occurs due to a seismic event, all closed loop piping fails both inside and outside containment, creating an open system connection both inside and outside containment. It is assumed that if CIV failure were to occur in addition to this, then an open path through containment would exist.

  Example: core damage due to a seismic event occurs, pipe breaks occur also due to the seismic event, the isolation valves fail; direct release path through the now open systems both inside and outside containment.

  Required input: CDF_{seis}, PB_{seis}, valve failure, CT

- Probability of 'SGTR with a Random Pipe Break Release': For systems connected to the SG and a closed (an actual closed loop) outside containment, a random pipe break occurring in the closed loop outside containment after a SGTR with CIV failure provides a direct path of release into the outside environment.

  Example: core damage due to SGTR occurs, the isolation valves fail (spuriously open or fail to close); a random pipe break occurs outside containment; direct release path into the outside environment.

  Required input: CDF_{SGTR}, PB_{random}, CT

Table 8-4 Generic Summary: Class III – Penetration Flow Paths Connected to the SGs

Calculation Number and Group	Penetration Description	Maintenance Description	Diagram	Valve Type Basis (see item 7 of Section 8.2)	Justified CT (hours)
1. Group III,A (see Section 8.2.4.1)	1 valve - normally closed	CIV is OC and is in maintenance (open system OC regardless): OR CIV is IC and is in maintenance such that the pressure boundary is maintained (still closed system IC):	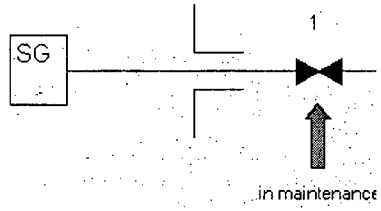 OR 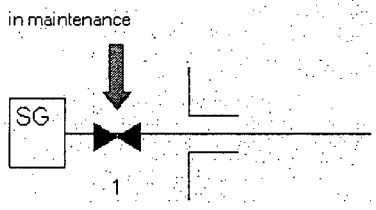	all	8
		CIV is IC and is in maintenance such that the pressure boundary is NOT maintained (becomes open system IC):	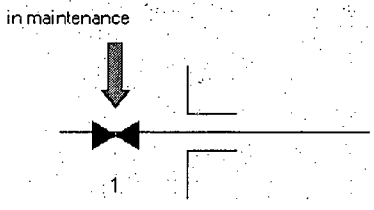	all	4

Table 8-4 (cont.) Generic Summary: Class III – Penetration Flow Paths Connected to the SGs

Calculation Number and Group	Penetration Description	Maintenance Description	Diagram	Valve Type Basis (see item 7 of Section 8.2)	Justified CT (hours)
2. Group III,A (see Section 8.2.4.1)	1 valve - normally open	CIV is OC and is in maintenance (open system OC regardless): OR CIV is IC and is in maintenance such that the pressure boundary is maintained (still closed system IC):	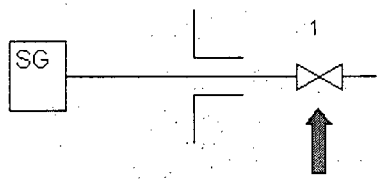 OR 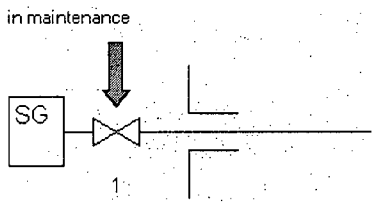	SOV MOV AOV Check SRV	8 8 8 8 8
		CIV is IC and is in maintenance such that the pressure boundary is NOT maintained (becomes open system IC):	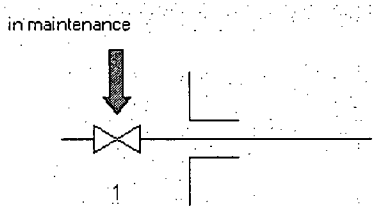	SOV MOV AOV Check SRV	4 4 4 4 4

Table 8-4 (cont.) Generic Summary: Class III – Penetration Flow Paths Connected to the SGs

Calculation Number and Group	Penetration Description	Maintenance Description	Diagram	Valve Type Basis (see item 7 of Section 8.2)	Justified CT (hours)
1. Group III,B (see Section 8.2.4.2)	1 valve - normally open	CIV is OC and is in maintenance such that the pressure boundary is maintained (still closed system OC): OR CIV is IC and is in maintenance such that the pressure boundary is maintained (still closed system IC):	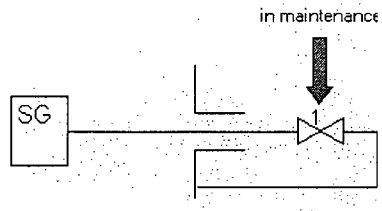 OR 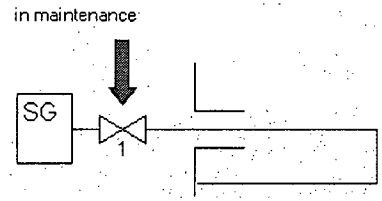	SOV MOV AOV Check SRV	8 8 8 8 8
		CIV is OC and is in maintenance such that the pressure boundary is NOT maintained (becomes open system OC):	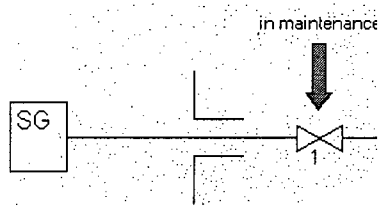	SOV MOV AOV Check SRV	8 8 8 8 8

Table 8-4 (cont.) Generic Summary: Class III – Penetration Flow Paths Connected to the SGs

Calculation Number and Group	Penetration Description	Maintenance Description	Diagram	Valve Type Basis (see item 7 of Section 8.2)	Justified CT (hours)
		CIV is IC and is in maintenance such that the pressure boundary is NOT maintained (becomes open system IC):	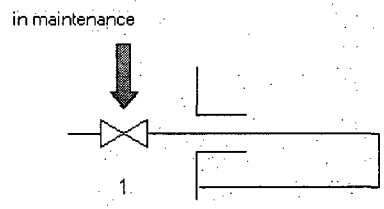	SOV MOV AOV Check SRV	8 8 8 8 8

8.2.4.1 Group IIIA: Flow paths connected to the SG secondary side and open to the outside environment

Calculation Number 1, Group III,A - 1 valve - normally closed (see Table 8-4)

- CIV is OC and is in maintenance (open system OC regardless): OR
  CIV is IC and is in maintenance such that the pressure boundary is maintained (still closed system IC):

OR

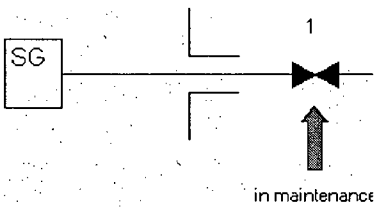

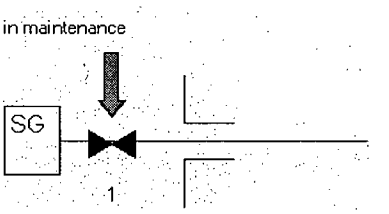

Key modeling details:

a,c

[ ]

a,c

[ ]

FINAL CT EXTENSION for valve 1, for any valve type: 8 hours (limited by ICLERP)

- CIV is IC and is in maintenance such that the pressure boundary is NOT maintained (becomes open system IC):

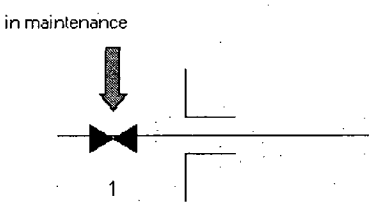

Key modeling details:

a,c

[ ]

a,c

FINAL CT EXTENSION for valve 1, for any valve type: 4 hours, no extension, (limited by ICLERP)

Calculation Number 2, Group III,A - 1 valve - normally open (see Table 8-4)

- CIV is OC and is in maintenance (open system OC regardless): OR
  CIV is IC and is in maintenance such that the pressure boundary is maintained (still closed system IC):

OR

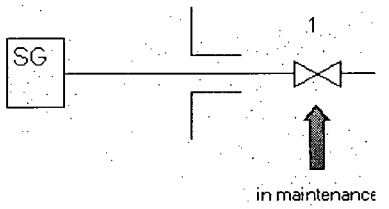

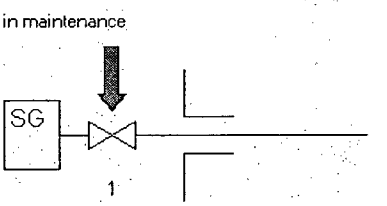

Key modeling details:

a,c

[ ]

a,c

[ ]

FINAL CT EXTENSION for valve 1, for SOV type: 8 hours (limited by ICLERP)

- CIV is IC and is in maintenance such that the pressure boundary is NOT maintained (becomes open system IC):

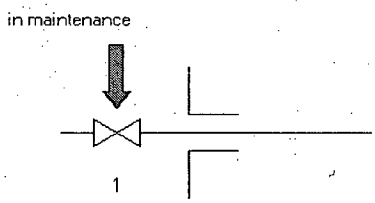

Key modeling details:

a,c

[ ]

a,c

FINAL CT EXTENSION for valve 1, for SOV type: 4 hours, no extension, (limited by ICLERP)

8.2.4.2 Group IIIB: Flow paths connected to the SG secondary side and closed to the outside environment

Calculation Number 1, Group III,B - 1 valve - normally open (see Table 8-4)

- CIV is OC and is in maintenance such that the pressure boundary is maintained (still closed system OC): OR
  CIV is IC and is in maintenance such that the pressure boundary is maintained (still closed system IC):

OR

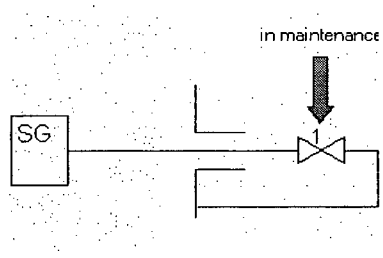

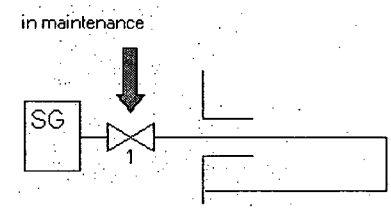

Key modeling details:

a,c

[ ]

a,c

FINAL CT EXTENSION for valve 1, for SOV type: 8 hours (limited by ICLERP)

- CIV is OC and is in maintenance such that the pressure boundary is NOT maintained (becomes open system OC):

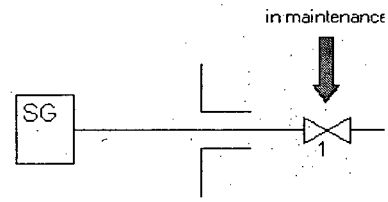

Key modeling details:

a,c

a,c

FINAL CT EXTENSION for valve 1, for SOV type: 8 hours (limited by ICLERP)

- CIV is IC and is in maintenance such that the pressure boundary is NOT maintained (becomes open system IC):

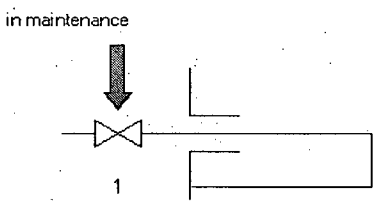

Key modeling details:

a,c

a,c

FINAL CT EXTENSION for valve 1, for SOV type: 8 hours (limited by ICLERP)

8.3 DETERMINISTIC EVALUATION OF CONTAINMENT HOLE SIZE

This section provides the evaluation to determine the minimum containment hole size that will result in a large release. Penetration flow paths connected to the containment atmosphere (this excludes all RCS and SG connections) that have piping diameters smaller than this minimum threshold value are of insufficient size to result in a large release. These penetrations automatically default to the 7 day CT and no detailed probabilistic analysis is required.

A large release was initially defined as a pathway of sufficient size to release the contents of the containment (i.e., one volume change) within one hour. This criteria is provided in the EPRI PSA Applications Guide (Reference 8). The vent diameter, or containment hole size, was calculated that met this criteria. For this program, all releases are considered early. Based on this criteria, the minimum containment hole sizes required for a large release are provided in Table 8-5 for each containment type.

As discussed in the section "Identification of Revisions", the NRC provided RAIs related to the minimum containment hole size required for a large release. Several detailed discussions were held with the Staff reviewers on the subject. The Staff did not agree with the definition that was used for a large release (one containment volume per hour) and felt the criteria used in previous studies was more appropriate. In previous studies, a 2 inch containment hole size has been used for screening in the development of containment isolation PRA models. Based on these discussions, the WOG agreed to apply a 2 inch containment hole size to define the threshold for a large release for all three containment types, that is, a hole size of > 2 inches can result in a large release.

Table 8-5 Containment Hole Size Results

Containment Type	Volume, V (ft^3)	Vent diameter / Pipe Size (in)
sub-atmospheric	[ ] a,c	[ ] a,c
ice condenser	[ ]	[ ]
Large dry containment	[ ]	[ ]

8.4 TIER 2: AVOIDANCE OF RISK-SIGNIFICANT PLANT CONDITIONS

The objective of the second tier, which is applicable to CT extensions, is to provide reasonable assurance that risk-significant plant equipment outage configurations will not occur when equipment is out of service. If risk-significant configurations do occur, then enhancements to Technical Specifications or procedures, such as limiting unavailability of backup systems, increased surveillance frequencies, or upgrading procedures or training, can be made that avoid, limit, or lessen the importance of these configurations.

The containment isolation valves form part of the containment barrier limiting releases to the environment. Other containment systems, such as the containment cooling system and containment spray system, also function to mitigate releases to the environment, but by different mechanisms. These other systems typically are used to preserve containment integrity by limiting containment pressure increase or to remove radioactive material from the containment atmosphere. The containment cooling and

containment spray systems are generally not considered backup to the containment isolation function. Given that containment isolation has failed, releases from containment are independent of the success or failure of containment cooling. The containment is already breached and containment pressure limitation is no longer an issue. On the other hand if containment isolation has failed, then containment sprays could be a factor in limiting releases via their scrubbing effect. This would be of limited benefit, because a large portion of the core damage sequences in which containment spray was functional at the time of the initiating event do not have effective scrubbing by sprays at the time of fission product release to the containment. Thus, efforts taken to assure the availability of containment spray when containment isolation may be impaired, do little to assure that containment spray will be effective in reducing releases if a core damage accident occurs. Also, when analyzed on a realistic basis, only a small fraction of the core damage sequences with containment isolation failures would result in fission product releases that are risk significant. Therefore, no Tier 2 limitations need to be imposed except for the one discussed below.

Item number 3 in Section 8.2 is a key assumption in the anaylsis. Therefore a Tier 2 requirement will be added to confirm that the remaining containment isolation valves(s) in the affected penetration(s) are in their correct position(s) prior to performing maintenance on a containment isolation valve.

8.5 TIER 3: RISK-INFORMED PLANT CONFIGURATION CONTROL AND MANAGEMENT

The objective of the third-tier is to ensure that the risk impact of out-of-service equipment is evaluated prior to performing any maintenance activity. As stated in RG-1.174, "a viable program would be one that is able to uncover risk-significant plant equipment outage configurations as they evolve during real-time, normal plant operation." The third-tier requirement is an extension of the second-tier requirement, but addresses the limitation of not being able to identify all possible risk-significant plant configurations in the second-tier evaluation.

Addressing third-tier requirements is outside the scope of this document. This will be addressed on a utility specific basis when the changes in this WCAP are implemented at each plant and will be addressed through each plant's Maintenance Rule Program (A.4 requirement).

9 LEAD PLANT APPLICATION OF THE GENERIC ANALYSIS

This section presents the analysis, basis, and assumptions used in the lead plant application of the generic assessment discussed in Section 8.

The lead plant for this analysis was the Wolf Creek Generating Station (WCGS). The lead plant application provided insight on how to fine tune the generic assessment so that it can be applied to all plants straightforwardly, provides an example application of the generic analysis, and provides a useful guidance tool for other utilities wanting to implement the change. Also, the final percentage of WCGS CIVs that can be justified for an extended CT are provided.

The implementation involved identifying all of WCGS's containment isolation penetrations, using the 2-inch containment hole size critiera of Section 8.3 to identify the 'small lines' (that are automatically justified to 168 hour CTs), matching the remaining penetrations up with the corresponding generic penetrations listed in Sections 8.2.2 through 8.2.4, and determining the final CTs for each CIV. The steps that were followed for WCGS are documented in Section 9.1. The steps are also the methodology that any other utility wanting to implement the change would need to follow.

9.1 IMPLEMENTATION PROCEDURE

a,c

[ ]

a,c

Table 9-1a Core Damage Frequency Inputs		
	Generic Analysis	**WCGS**
Total Core Damage Frequency [per year]: CDF_T	1.0E-04	5.48E-05[1]
Core Damage Frequency due to Seismic Event [per year]: CDF_{scis}	4.41E-05	see note 2

Note 1: This value is the total internal event, at-power, core damage frequency. The internal and external at-power CDF total is expected to be <1.0E-04/yr.

Note 2: The generic core damage frequency due to a seismic event (CDF_{seis}) per year was obtained from direct plant input for the program. Since WCGS has not performed a seismic-PRA, they do not have the relevant seismic information and the conservative value in the generic analysis is applied.

Note 3: CDF due to SGTR is not provided since WCGS has no containment penetrations from the SGs due to their containment boundary definition.

Table 9-1b Valve Failure Probabilities, Pftc, (per demand)			
Valve Type	**Failure Mode**	**Generic Analysis**	**WCGS[4]**
SOV	fail to close	1.81E-02	2.00E-03
MOV	fail to close	1.09E-02	6.15E-03
AOV	fail to close	1.81E-02	2.00E-03
Check	fail to reseat	3.44E-03	1.00E-03
SRV	fail to reseat	2.50E-02	3.00E-03

Note 4: The valve failure probabilities were obtained from plant PRA data.

Table 9-1c Beta and Gamma Factors		
Valve Type	**Generic Analysis due to valve failing to close, $beta_{ftc}$:**	**WCGS[5] due to valve failing to close, $beta_{ftc}$:**
SOV	0.1	0.08
MOV	0.088	0.038
AOV	0.1	0.08
Check	0.1	0.06
SRV	0.22	0.051
	Due to valve transferring open, $beta_{to}$:	**Due to valve transferring open, $beta_{to}$:**
all valve types	0.1	0.1
	Due to valve transferring open, $gamma_{to}$:	**Due to valve transferring open, $gamma_{to}$:**
all valve types	0.5	0.5

Note 5: The beta factors for valves failing to close were obtained from plant PRA data. The gamma and beta factors for valves transferring open were taken from the "Advanced Light Water Reactor Utility Requirements Document" (Reference 5).

Table 9-1d Additional Inputs	
PB_{scis} = Seismic Pipe Break Probability for Non-Seismically Qualified Pipe	1
FPB_{random} = Random Pipe Break Frequency (per year)	1.10E-03
	for all valve types:
P_{to} = Probability that Valve Spuriously Transfers Open (per hour)	1.00E-06
m = Corrective Maintenance Frequency (per year) (per valve)	1.00E-01
P_{mE} = Probability that Extra Valve is Disabled due to Maintenance (per demand) [assume extra valve currently has 72 hour CT]	8.22E-04

9.2 RESULTS

Table 9-3 below displays the cumulative percentages of justified CTs for this WCGS CIV CT extension study. This shows that 70% of all WCGS's CIVs are justified for a CT extension to a full 168 hours, or 7 days. Ninety-three percent of those penetrations are justified to a CT of at least 8 hours. Table 9-2 provides a detailed description of each WCGS CIV, how they were grouped, and the final CTs.

Table 9-3 Cumulative Percentages of CIV Completion Time Extensions Application of the Generic Results to the Wolf Creek Generating Station

Completion Time (hours)	Percentage of CIVs
8	93%
12	91%
24	88%
48	80%
72	80%
168	70%

Table 9-2 WCGS Containment Isolation Valve CT Results – Application of Generic Analysis

Penetration #	Valve	Grouping Explanation a,c	Group & Calc #	Maintenance Activity Type	ICLERP @ CT:	ΔLERF @ CT:	Justified CT
P-1 to P-12	-		-	-	-	-	-
P-13	ENHV-07		I,C #1	System pressure boundary maintained System pressure boundary compromised	8 hrs 4 hrs	168 hrs 168 hrs	**8 hrs** **4 hrs**
P-14	EJHV-8811B		I,C #1	System pressure boundary maintained System pressure boundary compromised	8 hrs 4 hrs	168 hrs 168 hrs	**8 hrs** **4 hrs**
	EJHV-24		small line	System pressure boundary maintained System pressure boundary compromised	168 hrs 168 hrs	168 hrs 168 hrs	**168 hrs** **168 hrs**
	EJHV-26		small line	System pressure boundary maintained System pressure boundary compromised	168 hrs 168 hrs	168 hrs 168 hrs	**168 hrs** **168 hrs**
	EJV-189		small line	System pressure boundary maintained System pressure boundary compromised	168 hrs 168 hrs	168 hrs 168 hrs	**168 hrs** **168 hrs**

Table 9-2 (cont.) WCGS Containment Isolation Valve CT Results – Application of Generic Analysis

Penetration #	Valve	Grouping Explanation a,c	Group & Calc #	Maintenance Activity Type	ICLERP @ CT:	ΔLERF @ CT:	Justified CT
P-15	EJHV-8811A		I,C #1	System pressure boundary maintained System pressure boundary compromised	8 hrs 4 hrs	168 hrs 168 hrs	**8 hrs** **4 hrs**
	EJHV-23		small line	System pressure boundary maintained System pressure boundary compromised	168 hrs 168 hrs	168 hrs 168 hrs	**168 hrs** **168 hrs**
	EJHV-25		small line	System pressure boundary maintained System pressure boundary compromised	168 hrs 168 hrs	168 hrs 168 hrs	**168 hrs** **168 hrs**
	EJV-187		small line	System pressure boundary maintained System pressure boundary compromised	168 hrs 168 hrs	168 hrs 168 hrs	**168 hrs** **168 hrs**
P-16	ENHV-01		I,C #1	System pressure boundary maintained System pressure boundary compromised	8 hrs 4 hrs	168 hrs 168 hrs	**8 hrs** **4 hrs**
P-21	EJHCV-8825		small line	System pressure boundary maintained System pressure boundary compromised	168 hrs 168 hrs	168 hrs 168 hrs	**168 hrs** **168 hrs**
	EJHV-8840		II,A #5	System pressure boundary maintained System pressure boundary compromised	72 hrs 72 hrs	168 hrs 168 hrs	**72 hrs** **72 hrs**

Table 9-2 (cont.) WCGS Containment Isolation Valve CT Results – Application of Generic Analysis

Penetration #	Valve	Grouping Explanation a,c	Group & Calc #	Maintenance Activity Type	ICLERP @ CT:	ΔLERF @ CT:	Justified CT
	EJV-056		II,A #5	System pressure boundary maintained System pressure boundary compromised	72 hrs 72 hrs	168 hrs 168 hrs	**72 hrs** **72 hrs**
	EJV-124		small line	System pressure boundary maintained System pressure boundary compromised	168 hrs 168 hrs	168 hrs 168 hrs	**168 hrs** **168 hrs**
	EJV-122		small line	System pressure boundary maintained System pressure boundary compromised	168 hrs 168 hrs	168 hrs 168 hrs	**168 hrs** **168 hrs**
	EJV-118,120		small line	System pressure boundary maintained System pressure boundary compromised	168 hrs 168 hrs	168 hrs 168 hrs	**168 hrs** **168 hrs**
	EJV-175,6,7,8		small line	System pressure boundary maintained System pressure boundary compromised	168 hrs 168 hrs	168 hrs 168 hrs	**168 hrs** **168 hrs**

Table 9-2 (cont.) WCGS Containment Isolation Valve CT Results – Application of Generic Analysis

Penetration #	Valve	Grouping Explanation a,c	Group & Calc #	Maintenance Activity Type	ICLERP @ CT:	ΔLERF @ CT:	Justified CT
	EJ-8841A		II,A #5	System pressure boundary maintained System pressure boundary compromised	72 hrs 168 hrs	168 hrs 168 hrs	**72 hrs** **168 hrs**
	EJ-8841B		II,A #5	System pressure boundary maintained System pressure boundary compromised	72 hrs 168 hrs	168 hrs 168 hrs	**72 hrs** **168 hrs**
P-22	BBHV-8351B		small line	System pressure boundary maintained System pressure boundary compromised	168 hrs 168 hrs	168 hrs 168 hrs	**168 hrs** **168 hrs**
	BBV-354		small line	System pressure boundary maintained System pressure boundary compromised	168 hrs 168 hrs	168 hrs 168 hrs	**168 hrs** **168 hrs**

Table 9-2 (cont.) WCGS Containment Isolation Valve CT Results – Application of Generic Analysis

Penetration #	Valve	Grouping Explanation a,c	Group & Calc #	Maintenance Activity Type	ICLERP @ CT:	ΔLERF @ CT:	Justified CT
	BBV-246		small line	System pressure boundary maintained System pressure boundary compromised	168 hrs 168 hrs	168 hrs 168 hrs	**168 hrs** **168 hrs**
	BBV148		small line	System pressure boundary maintained System pressure boundary compromised	168 hrs 168 hrs	168 hrs 168 hrs	**168 hrs** **168 hrs**
P-23	BGHV-8160		II,B #1	System pressure boundary maintained System pressure boundary compromised	24 hrs 24 hrs	168 hrs 168 hrs	**24 hrs** **24 hrs**

Table 9-2 (cont.) WCGS Containment Isolation Valve CT Results – Application of Generic Analysis

Penetration #	Valve	Grouping Explanation a,c	Group & Calc #	Maintenance Activity Type	ICLERP @ CT:	ΔLERF @ CT:	Justified CT
	BGV-363		II,B #1	System pressure boundary maintained System pressure boundary compromised	72 hrs 72 hrs	168 hrs 168 hrs	**72 hrs** **72 hrs**
	BGHV-8152		II,B #1	System pressure boundary maintained System pressure boundary compromised	24 hrs 24 hrs	168 hrs 168 hrs	**24 hrs** **24 hrs**
P-24	BGHV-8112		small line	System pressure boundary maintained System pressure boundary compromised	168 hrs 168 hrs	168 hrs 168 hrs	**168 hrs** **168 hrs**

Table 9-2 (cont.) WCGS Containment Isolation Valve CT Results – Application of Generic Analysis

Penetration #	Valve	Grouping Explanation a,c	Group & Calc #	Maintenance Activity Type	ICLERP @ CT:	ΔLERF @ CT:	Justified CT
	BGV-135		small line	System pressure boundary maintained System pressure boundary compromised	168 hrs 168 hrs	168 hrs 168 hrs	**168 hrs** **168 hrs**
	BGHV-8100		small line	System pressure boundary maintained System pressure boundary compromised	168 hrs 168 hrs	168 hrs 168 hrs	**168 hrs** **168 hrs**
	BGV-457		small line	System pressure boundary maintained System pressure boundary compromised	168 hrs 168 hrs	168 hrs 168 hrs	**168 hrs** **168 hrs**

Table 9-2 (cont.) WCGS Containment Isolation Valve CT Results – Application of Generic Analysis

Penetration #	Valve	Grouping Explanation a,c	Group & Calc #	Maintenance Activity Type	ICLERP @ CT:	ΔLERF @ CT:	Justified CT
P-25	BLHV-8047		I,A #4	System pressure boundary maintained System pressure boundary compromised	168 hrs 168 hrs	168 hrs 168 hrs	**168 hrs** **168 hrs**
	BLV-054		small line	System pressure boundary maintained System pressure boundary compromised	168 hrs 168 hrs	168 hrs 168 hrs	**168 hrs** **168 hrs**
	BL-8046		I,A #4	System pressure boundary maintained System pressure boundary compromised	168 hrs 168 hrs	168 hrs 168 hrs	**168 hrs** **168 hrs**
P-26	HBHV-7176		I,B #5	System pressure boundary maintained System pressure boundary compromised	72 hrs 24 hrs	168 hrs 168 hrs	**72 hrs** **24 hrs**

Table 9-2 (cont.) WCGS Containment Isolation Valve CT Results – Application of Generic Analysis

Penetration #	Valve	Grouping Explanation a,c	Group & Calc #	Maintenance Activity Type	ICLERP @ CT:	ΔLERF @ CT:	Justified CT
	HBHV-7136		I,B #5	System pressure boundary maintained System pressure boundary compromised	72 hrs 72 hrs	168 hrs 168 hrs	**72 hrs** **72 hrs**
	HBV-419		small line	System pressure boundary maintained System pressure boundary compromised	168 hrs 168 hrs	168 hrs 168 hrs	**168 hrs** **168 hrs**
P-27	EJHV-8809B		II,A #6	System pressure boundary maintained System pressure boundary compromised	72 hrs 72 hrs	4 hrs 4 hrs	**4 hrs** **4 hrs**

Table 9-2 (cont.) WCGS Containment Isolation Valve CT Results – Application of Generic Analysis

Penetration #	Valve	Grouping Explanation a,c	Group & Calc #	Maintenance Activity Type	ICLERP @ CT:	ΔLERF @ CT:	Justified CT
	EJV-058		II,A #6	System pressure boundary maintained System pressure boundary compromised	72 hrs 72 hrs	4 hrs 4 hrs	**4 hrs** **4 hrs**
	EJHCV-8890B		small line	System pressure boundary maintained System pressure boundary compromised	168 hrs 168 hrs	168 hrs 168 hrs	**168 hrs** **168 hrs**
	EJV-086		small line	System pressure boundary maintained System pressure boundary compromised	168 hrs 168 hrs	168 hrs 168 hrs	**168 hrs** **168 hrs**
	EJV-088,090		small line	System pressure boundary maintained System pressure boundary compromised	168 hrs 168 hrs	168 hrs 168 hrs	**168 hrs** **168 hrs**

Table 9-2 (cont.) WCGS Containment Isolation Valve CT Results – Application of Generic Analysis

Penetration #	Valve	Grouping Explanation a,c	Group & Calc #	Maintenance Activity Type	ICLERP @ CT:	ΔLERF @ CT:	Justified CT
	EP-8818C		II,A #6	System pressure boundary maintained System pressure boundary compromised	4 hrs 168 hrs	4 hrs 4 hrs	**4 hrs** **4 hrs**
	EJV-179, 180, 181,182		small line	System pressure boundary maintained System pressure boundary compromised	168 hrs 168 hrs	168 hrs 168 hrs	**168 hrs** **168 hrs**
	EP-8818D		II,A #6	System pressure boundary maintained System pressure boundary compromised	4 hrs 168 hrs	4 hrs 4 hrs	**4 hrs** **4 hrs**
	EJV-166		small line	System pressure boundary maintained System pressure boundary compromised	168 hrs 168 hrs	168 hrs 168 hrs	**168 hrs** **168 hrs**

Table 9-2 (cont.) WCGS Containment Isolation Valve CT Results – Application of Generic Analysis

Penetration #	Valve	Grouping Explanation a,c	Group & Calc #	Maintenance Activity Type	ICLERP @ CT:	ΔLERF @ CT:	Justified CT
P-28	EFHV-32		I,B #5	System pressure boundary maintained System pressure boundary compromised	72 hrs 72 hrs	168 hrs 168 hrs	**72 hrs** **72 hrs**
	EFHV-34		I,B #5	System pressure boundary maintained System pressure boundary compromised	72 hrs 24 hrs	168 hrs 168 hrs	**72 hrs** **24 hrs**
	EFV-278		small line	System pressure boundary maintained System pressure boundary compromised	168 hrs 168 hrs	168 hrs 168 hrs	**168 hrs** **168 hrs**
P-29	EFHV-46		I,B #5	System pressure boundary maintained System pressure boundary compromised	72 hrs 24 hrs	168 hrs 168 hrs	**72 hrs** **24 hrs**
	EFV-279		small line	System pressure boundary maintained System pressure boundary compromised	168 hrs 168 hrs	168 hrs 168 hrs	**168 hrs** **168 hrs**

Table 9-2 (cont.) WCGS Containment Isolation Valve CT Results – Application of Generic Analysis

Penetration #	Valve	Grouping Explanation a,c	Group & Calc #	Maintenance Activity Type	ICLERP @ CT:	ΔLERF @ CT:	Justified CT
	EFHV-50		I,B #5	System pressure boundary maintained System pressure boundary compromised	72 hrs 72 hrs	168 hrs 168 hrs	**72 hrs** **72 hrs**
P-30	KAFV-29		small line	System pressure boundary maintained System pressure boundary compromised	168 hrs 168 hrs	168 hrs 168 hrs	**168 hrs** **168 hrs**
	KAV-218		small line	System pressure boundary maintained System pressure boundary compromised	168 hrs 168 hrs	168 hrs 168 hrs	**168 hrs** **168 hrs**
	KAV-204		small line	System pressure boundary maintained System pressure boundary compromised	168 hrs 168 hrs	168 hrs 168 hrs	**168 hrs** **168 hrs**
P-32	LFFV-95		I,A #14 or I,A #4 if valve 96 is open	System pressure boundary maintained System pressure boundary compromised	168 hrs 168 hrs	168 hrs 168 hrs	**168 hrs** **168 hrs**

Table 9-2 (cont.) WCGS Containment Isolation Valve CT Results – Application of Generic Analysis

Penetration #	Valve	Grouping Explanation a,c	Group & Calc #	Maintenance Activity Type	ICLERP @ CT:	ΔLERF @ CT:	Justified CT
	LFFV-96		I,A #14 or I,A #4 if valve 96 is open	System pressure boundary maintained System pressure boundary compromised	168 hrs 168 hrs	168 hrs 168 hrs	**168 hrs** **168 hrs**
	LFV-093		small line	System pressure boundary maintained System pressure boundary compromised	168 hrs 168 hrs	168 hrs 168 hrs	**168 hrs** **168 hrs**
P-34	GPV-010		small line	System pressure boundary maintained System pressure boundary compromised	168 hrs 168 hrs	168 hrs 168 hrs	**168 hrs** **168 hrs**
	Flanges		I,A #1	System pressure boundary maintained System pressure boundary compromised	24 hrs 24 hrs	168 hrs 168 hrs	**24 hrs** **24 hrs**

Table 9-2 (cont.) WCGS Containment Isolation Valve CT Results – Application of Generic Analysis

Penetration #	Valve	Grouping Explanation a,c	Group & Calc #	Maintenance Activity Type	ICLERP @ CT:	ΔLERF @ CT:	Justified CT
P-39	BBHV-8351C		small line	System pressure boundary maintained System pressure boundary compromised	168 hrs 168 hrs	168 hrs 168 hrs	**168 hrs** **168 hrs**
	BBV-356		small line	System pressure boundary maintained System pressure boundary compromised	168 hrs 168 hrs	168 hrs 168 hrs	**168 hrs** **168 hrs**
	BBV-247		small line	System pressure boundary maintained System pressure boundary compromised	168 hrs 168 hrs	168 hrs 168 hrs	**168 hrs** **168 hrs**

Table 9-2 (cont.) WCGS Containment Isolation Valve CT Results – Application of Generic Analysis

Penetration #	Valve	Grouping Explanation a,c	Group & Calc #	Maintenance Activity Type	ICLERP @ CT:	ΔLERF @ CT:	Justified CT
	BBV-178		small line	System pressure boundary maintained System pressure boundary compromised	168 hrs 168 hrs	168 hrs 168 hrs	**168 hrs** **168 hrs**
P-40	BBHV-8351D		small line	System pressure boundary maintained System pressure boundary compromised	168 hrs 168 hrs	168 hrs 168 hrs	**168 hrs** **168 hrs**
	BBV-358		small line	System pressure boundary maintained System pressure boundary compromised	168 hrs 168 hrs	168 hrs 168 hrs	**168 hrs** **168 hrs**

Table 9-2 (cont.) WCGS Containment Isolation Valve CT Results – Application of Generic Analysis

Penetration #	Valve	Grouping Explanation a,c	Group & Calc #	Maintenance Activity Type	ICLERP @ CT:	ΔLERF @ CT:	Justified CT
	BBV-248		small line	System pressure boundary maintained System pressure boundary compromised	168 hrs 168 hrs	168 hrs 168 hrs	**168 hrs** **168 hrs**
	BBV-208		small line	System pressure boundary maintained System pressure boundary compromised	168 hrs 168 hrs	168 hrs 168 hrs	**168 hrs** **168 hrs**
P-41	BBHV-8351A		small line	System pressure boundary maintained System pressure boundary compromised	168 hrs 168 hrs	168 hrs 168 hrs	**168 hrs** **168 hrs**

Table 9-2 (cont.) WCGS Containment Isolation Valve CT Results – Application of Generic Analysis

Penetration #	Valve	Grouping Explanation a,c	Group & Calc #	Maintenance Activity Type	ICLERP @ CT:	ΔLERF @ CT:	Justified CT
	BBV-352		small line	System pressure boundary maintained System pressure boundary compromised	168 hrs 168 hrs	168 hrs 168 hrs	**168 hrs** **168 hrs**
	BBV-245		small line	System pressure boundary maintained System pressure boundary compromised	168 hrs 168 hrs	168 hrs 168 hrs	**168 hrs** **168 hrs**
	BBV-118		small line	System pressure boundary maintained System pressure boundary compromised	168 hrs 168 hrs	168 hrs 168 hrs	**168 hrs** **168 hrs**
P-43	HDV-016		small line	System pressure boundary maintained System pressure boundary compromised	168 hrs 168 hrs	168 hrs 168 hrs	**168 hrs** **168 hrs**

Table 9-2 (cont.) WCGS Containment Isolation Valve CT Results – Application of Generic Analysis

Penetration #	Valve	Grouping Explanation a,c	Group & Calc #	Maintenance Activity Type	ICLERP @ CT:	ΔLERF @ CT:	Justified CT
	HDV-023		small line	System pressure boundary maintained System pressure boundary compromised	168 hrs 168 hrs	168 hrs 168 hrs	**168 hrs** **168 hrs**
	HDV-017		small line	System pressure boundary maintained System pressure boundary compromised	168 hrs 168 hrs	168 hrs 168 hrs	**168 hrs** **168 hrs**
P-44	HBHV-7126		small line	System pressure boundary maintained System pressure boundary compromised	168 hrs 168 hrs	168 hrs 168 hrs	**168 hrs** **168 hrs**
	HBHV-7150		small line	System pressure boundary maintained System pressure boundary compromised	168 hrs 168 hrs	168 hrs 168 hrs	**168 hrs** **168 hrs**

Table 9-2 (cont.) WCGS Containment Isolation Valve CT Results – Application of Generic Analysis

Penetration #	Valve	Grouping Explanation a,c	Group & Calc #	Maintenance Activity Type	ICLERP @ CT:	ΔLERF @ CT:	Justified CT
	HBV-420		small line	System pressure boundary maintained System pressure boundary compromised	168 hrs 168 hrs	168 hrs 168 hrs	**168 hrs** **168 hrs**
P-45	EPV-046		small line	System pressure boundary maintained System pressure boundary compromised	168 hrs 168 hrs	168 hrs 168 hrs	**168 hrs** **168 hrs**
	EPV-043		small line	System pressure boundary maintained System pressure boundary compromised	168 hrs 168 hrs	168 hrs 168 hrs	**168 hrs** **168 hrs**
	EPHV-8880		small line	System pressure boundary maintained System pressure boundary compromised	168 hrs 168 hrs	168 hrs 168 hrs	**168 hrs** **168 hrs**
P-48	EMHV-8802B		II,A #5	System pressure boundary maintained System pressure boundary compromised	72 hrs 72 hrs	168 hrs 168 hrs	**72 hrs** **72 hrs**

Table 9-2 (cont.) WCGS Containment Isolation Valve CT Results – Application of Generic Analysis

Penetration #	Valve	Grouping Explanation a,c	Group & Calc #	Maintenance Activity Type	ICLERP @ CT:	ΔLERF @ CT:	Justified CT
	EMHV-8824		small line	System pressure boundary maintained System pressure boundary compromised	168 hrs 168 hrs	168 hrs 168 hrs	**168 hrs** **168 hrs**
	EMV-003		II,A #5	System pressure boundary maintained System pressure boundary compromised	72 hrs 168 hrs	168 hrs 168 hrs	**72 hrs** **168 hrs**
	EMV-004		II,A #5	System pressure boundary maintained System pressure boundary compromised	72 hrs 168 hrs	168 hrs 168 hrs	**72 hrs** **168 hrs**

Table 9-2 (cont.) WCGS Containment Isolation Valve CT Results – Application of Generic Analysis

Penetration #	Valve	Grouping Explanation a,c	Group & Calc #	Maintenance Activity Type	ICLERP @ CT:	ΔLERF @ CT:	Justified CT
	EMV-060, 061, 063,064 EMV-217, 169		small line	System pressure boundary maintained System pressure boundary compromised	168 hrs 168 hrs	168 hrs 168 hrs	**168 hrs** **168 hrs**
	EMV-170,172		small line	System pressure boundary maintained System pressure boundary compromised	168 hrs 168 hrs	168 hrs 168 hrs	**168 hrs** **168 hrs**
	EMV-059		II,A #5	System pressure boundary maintained System pressure boundary compromised	72 hrs 72 hrs	168 hrs 168 hrs	**72 hrs** **72 hrs**
P-49	EMHV-8835		II,A #7	System pressure boundary maintained System pressure boundary compromised	72 hrs 72 hrs	4 hrs 4 hrs	**4 hrs** **4 hrs**
	EMHV-8823		small line	System pressure boundary maintained System pressure boundary compromised	168 hrs 168 hrs	168 hrs 168 hrs	**168 hrs** **168 hrs**

Table 9-2 (cont.) WCGS Containment Isolation Valve CT Results – Application of Generic Analysis

Penetration #	Valve	Grouping Explanation a,c	Group & Calc #	Maintenance Activity Type	ICLERP @ CT:	ΔLERF @ CT:	Justified CT
	EPV-020		II,A #7	System pressure boundary maintained System pressure boundary compromised	4 hrs 168 hrs	4 hrs 168 hrs	**4 hrs** **168 hrs**
	EPV-010		II,A #7	System pressure boundary maintained System pressure boundary compromised	4 hrs 168 hrs	4 hrs 168 hrs	**4 hrs** **168 hrs**

Table 9-2 (cont.) WCGS Containment Isolation Valve CT Results – Application of Generic Analysis

Penetration #	Valve	Grouping Explanation a,c	Group & Calc #	Maintenance Activity Type	ICLERP @ CT:	ΔLERF @ CT:	Justified CT
	EPV-040		II.A #7	System pressure boundary maintained System pressure boundary compromised	4 hrs 168 hrs	4 hrs 168 hrs	**4 hrs** **168 hrs**
	EPV-030		II.A #7	System pressure boundary maintained System pressure boundary compromised	4 hrs 168 hrs	4 hrs 168 hrs	**4 hrs** **168 hrs**

Table 9-2 (cont.) WCGS Containment Isolation Valve CT Results – Application of Generic Analysis

Penetration #	Valve	Grouping Explanation a,c	Group & Calc #	Maintenance Activity Type	ICLERP @ CT:	ΔLERF @ CT:	Justified CT
	EMV-067		II,A #7	System pressure boundary maintained System pressure boundary compromised	72 hrs 72 hrs	4 hrs 4 hrs	**4 hrs** **4 hrs**
	EMV-068 thru EMV-075		small line	System pressure boundary maintained System pressure boundary compromised	168 hrs 168 hrs	168 hrs 168 hrs	**168 hrs** **168 hrs**
	EMV-218 EMV-162 thru EMV-168		small line	System pressure boundary maintained System pressure boundary compromised	168 hrs 168 hrs	168 hrs 168 hrs	**168 hrs** **168 hrs**
P-51	GPV-011		small line	System pressure boundary maintained System pressure boundary compromised	168 hrs 168 hrs	168 hrs 168 hrs	**168 hrs** **168 hrs**
	GPV-012		small line	System pressure boundary maintained System pressure boundary compromised	168 hrs 168 hrs	168 hrs 168 hrs	**168 hrs** **168 hrs**
	Flanges		small line	System pressure boundary maintained System pressure boundary compromised	168 hrs 168 hrs	168 hrs 168 hrs	**168 hrs** **168 hrs**

Table 9-2 (cont.) WCGS Containment Isolation Valve CT Results – Application of Generic Analysis

Penetration #	Valve	Grouping Explanation a,c	Group & Calc #	Maintenance Activity Type	ICLERP @ CT:	ΔLERF @ CT:	Justified CT
P-52	EJHV-8701B		II,A #8 & I,C #23	System pressure boundary maintained System pressure boundary compromised	4 hrs 8 hrs	4 hrs 168 hrs	**4 hrs** **8 hrs**
	EJ-8708B		I,C #23	System pressure boundary maintained System pressure boundary compromised	8 hrs 8 hrs	168 hrs 168 hrs	**8 hrs** **8 hrs**
P-53	ECV-084		I,A #1	System pressure boundary maintained System pressure boundary compromised	24 hrs 24 hrs	168 hrs 168 hrs	**24 hrs** **24 hrs**
	ECV-085		small line	System pressure boundary maintained System pressure boundary compromised	168 hrs 168 hrs	168 hrs 168 hrs	**168 hrs** **168 hrs**
	ECV-083		I,A #1	System pressure boundary maintained System pressure boundary compromised	24 hrs 24 hrs	168 hrs 168 hrs	**24 hrs** **24 hrs**

Table 9-2 (cont.) WCGS Containment Isolation Valve CT Results – Application of Generic Analysis

Penetration #	Valve	Grouping Explanation a,c	Group & Calc #	Maintenance Activity Type	ICLERP @ CT:	ΔLERF @ CT:	Justified CT
P-54	ECV-087		I,A #1	System pressure boundary maintained System pressure boundary compromised	24 hrs 24 hrs	168 hrs 168 hrs	**24 hrs** **24 hrs**
	ECV-086		small line	System pressure boundary maintained System pressure boundary compromised	168 hrs 168 hrs	168 hrs 168 hrs	**168 hrs** **168 hrs**
	ECV-088		I,A #1	System pressure boundary maintained System pressure boundary compromised	24 hrs 24 hrs	168 hrs 168 hrs	**24 hrs** **24 hrs**
P-55	ECV-095		I,A #1	System pressure boundary maintained System pressure boundary compromised	24 hrs 24 hrs	168 hrs 168 hrs	**24 hrs** **24 hrs**
	ECV-094		small line	System pressure boundary maintained System pressure boundary compromised	168 hrs 168 hrs	168 hrs 168 hrs	**168 hrs** **168 hrs**
	ECV-096		I,A #1	System pressure boundary maintained System pressure boundary compromised	24 hrs 24 hrs	168 hrs 168 hrs	**24 hrs** **24 hrs**

Table 9-2 (cont.) WCGS Containment Isolation Valve CT Results – Application of Generic Analysis

Penetration #	Valve	Grouping Explanation a,c	Group & Calc #	Maintenance Activity Type	ICLERP @ CT:	ΔLERF @ CT:	Justified CT
P-56	GSHV-9		small line	System pressure boundary maintained System pressure boundary compromised	168 hrs 168 hrs	168 hrs 168 hrs	**168 hrs** **168 hrs**
	GSHV-8		small line	System pressure boundary maintained System pressure boundary compromised	168 hrs 168 hrs	168 hrs 168 hrs	**168 hrs** **168 hrs**
	GSV-032		small line	System pressure boundary maintained System pressure boundary compromised	168 hrs 168 hrs	168 hrs 168 hrs	**168 hrs** **168 hrs**
P-56	GSHV-38		small line	System pressure boundary maintained System pressure boundary compromised	168 hrs 168 hrs	168 hrs 168 hrs	**168 hrs** **168 hrs**
	GSHV-39		small line	System pressure boundary maintained System pressure boundary compromised	168 hrs 168 hrs	168 hrs 168 hrs	**168 hrs** **168 hrs**
	GSV-058		small line	System pressure boundary maintained System pressure boundary compromised	168 hrs 168 hrs	168 hrs 168 hrs	**168 hrs** **168 hrs**

Table 9-2 (cont.) WCGS Containment Isolation Valve CT Results – Application of Generic Analysis

Penetration #	Valve	Grouping Explanation a,c	Group & Calc #	Maintenance Activity Type	ICLERP @ CT:	ΔLERF @ CT:	Justified CT
P-57	SJHV-131		small line	System pressure boundary maintained System pressure boundary compromised	168 hrs 168 hrs	168 hrs 168 hrs	**168 hrs** **168 hrs**
	SJHV-132		small line	System pressure boundary maintained System pressure boundary compromised	168 hrs 168 hrs	168 hrs 168 hrs	**168 hrs** **168 hrs**
	SJV-111		small line	System pressure boundary maintained System pressure boundary compromised	168 hrs 168 hrs	168 hrs 168 hrs	**168 hrs** **168 hrs**
	SJV-114		small line	System pressure boundary maintained System pressure boundary compromised	168 hrs 168 hrs	168 hrs 168 hrs	**168 hrs** **168 hrs**
P-58	EMV-006		small line	System pressure boundary maintained System pressure boundary compromised	168 hrs 168 hrs	168 hrs 168 hrs	**168 hrs** **168 hrs**
	EMV-182		small line	System pressure boundary maintained System pressure boundary compromised	168 hrs 168 hrs	168 hrs 168 hrs	**168 hrs** **168 hrs**
	EMV-123		small line	System pressure boundary maintained System pressure boundary compromised	168 hrs 168 hrs	168 hrs 168 hrs	**168 hrs** **168 hrs**

Table 9-2 (cont.) WCGS Containment Isolation Valve CT Results – Application of Generic Analysis

Penetration #	Valve	Grouping Explanation a,c	Group & Calc #	Maintenance Activity Type	ICLERP @ CT:	ΔLERF @ CT:	Justified CT
	EMHV-8888		small line	System pressure boundary maintained System pressure boundary compromised	168 hrs 168 hrs	168 hrs 168 hrs	**168 hrs** **168 hrs**
P-59	N/A		II,A #9	System pressure boundary maintained System pressure boundary compromised	168 hrs 168 hrs	168 hrs 168 hrs	**168 hrs** **168 hrs**
P-62	BBHV-8026		small line	System pressure boundary maintained System pressure boundary compromised	168 hrs 168 hrs	168 hrs 168 hrs	**168 hrs** **168 hrs**
	BBHV-8027		small line	System pressure boundary maintained System pressure boundary compromised	168 hrs 168 hrs	168 hrs 168 hrs	**168 hrs** **168 hrs**
P-63	KAV-118		I,A #2	System pressure boundary maintained System pressure boundary compromised	168 hrs 168 hrs	168 hrs 168 hrs	**168 hrs** **168 hrs**
	KAV-163		small line	System pressure boundary maintained System pressure boundary compromised	168 hrs 168 hrs	168 hrs 168 hrs	**168 hrs** **168 hrs**
	KAV-039		I,A #2	System pressure boundary maintained System pressure boundary compromised	168 hrs 168 hrs	168 hrs 168 hrs	**168 hrs** **168 hrs**

Table 9-2 (cont.) WCGS Containment Isolation Valve CT Results – Application of Generic Analysis

Penetration #	Valve	Grouping Explanation a,c	Group & Calc #	Maintenance Activity Type	ICLERP @ CT:	ΔLERF @ CT:	Justified CT
P-64	SJHV-128		II,A #4	System pressure boundary maintained System pressure boundary compromised	12 hrs 168 hrs	168 hrs 168 hrs	**12 hrs** **168 hrs**
	SJHV-129		II,A #4	System pressure boundary maintained System pressure boundary compromised	168 hrs 168 hrs	168 hrs 168 hrs	**168 hrs** **168 hrs**
	SJHV-130		II,A #4	System pressure boundary maintained System pressure boundary compromised	168 hrs 168 hrs	168 hrs 168 hrs	**168 hrs** **168 hrs**
	SJV-106		II,A #4	System pressure boundary maintained System pressure boundary compromised	168 hrs 168 hrs	168 hrs 168 hrs	**168 hrs** **168 hrs**
P-65	GSHV-20		I,A #1	System pressure boundary maintained System pressure boundary compromised	24 hrs 24 hrs	168 hrs 168 hrs	**24 hrs** **24 hrs**

Table 9-2 (cont.) WCGS Containment Isolation Valve CT Results – Application of Generic Analysis

Penetration #	Valve	Grouping Explanation a,c	Group & Calc #	Maintenance Activity Type	ICLERP @ CT:	ΔLERF @ CT:	Justified CT
	GSHV-21		I,A #1	System pressure boundary maintained System pressure boundary compromised	24 hrs 24 hrs	168 hrs 168 hrs	**24 hrs** **24 hrs**
	GSV-041		small line	System pressure boundary maintained System pressure boundary compromised	168 hrs 168 hrs	168 hrs 168 hrs	**168 hrs** **168 hrs**
P-66	ENHV-12		I,C #4	System pressure boundary maintained System pressure boundary compromised	168 hrs 168 hrs	168 hrs 168 hrs	**168 hrs** **168 hrs**
	ENV-080		small line	System pressure boundary maintained System pressure boundary compromised	168 hrs 168 hrs	168 hrs 168 hrs	**168 hrs** **168 hrs**
	ENV-017		I,C #4	System pressure boundary maintained System pressure boundary compromised	168 hrs 168 hrs	168 hrs 168 hrs	**168 hrs** **168 hrs**
P-67	KCHV-253		I,A #2	System pressure boundary maintained System pressure boundary compromised	168 hrs 168 hrs	168 hrs 168 hrs	**168 hrs** **168 hrs**

Table 9-2 (cont.) WCGS Containment Isolation Valve CT Results – Application of Generic Analysis

Penetration #	Valve	Grouping Explanation a,c	Group & Calc #	Maintenance Activity Type	ICLERP @ CT:	ΔLERF @ CT:	Justified CT
	KCV-478		I,A #2	System pressure boundary maintained System pressure boundary compromised	168 hrs 168 hrs	168 hrs 168 hrs	**168 hrs** **168 hrs**
	KCV-431		small line	System pressure boundary maintained System pressure boundary compromised	168 hrs 168 hrs	168 hrs 168 hrs	**168 hrs** **168 hrs**
P-69	SJHV-12		II,A #2	System pressure boundary maintained System pressure boundary compromised	24 hrs 168 hrs	168 hrs 168 hrs	**24 hrs** **168 hrs**
	SJHV-13		II,A #2	System pressure boundary maintained System pressure boundary compromised	24 hrs 24 hrs	168 hrs 168 hrs	**24 hrs** **24 hrs**
	SJV-071		II,A #2	System pressure boundary maintained System pressure boundary compromised	168 hrs 168 hrs	168 hrs 168 hrs	**168 hrs** **168 hrs**

Table 9-2 (cont.) WCGS Containment Isolation Valve CT Results – Application of Generic Analysis

Penetration #	Valve	Grouping Explanation a,c	Group & Calc #	Maintenance Activity Type	ICLERP @ CT:	ΔLERF @ CT:	Justified CT
P-71	EFHV-31		I,B #5	System pressure boundary maintained System pressure boundary compromised	72 hrs 72 hrs	168 hrs 168 hrs	**72 hrs** **72 hrs**
	EFV-276		small line	System pressure boundary maintained System pressure boundary compromised	168 hrs 168 hrs	168 hrs 168 hrs	**168 hrs** **168 hrs**
	EFHV-33		I,B #5	System pressure boundary maintained System pressure boundary compromised	72 hrs 24 hrs	168 hrs 168 hrs	**72 hrs** **24 hrs**
P-73	EFHV-45		I,B #5	System pressure boundary maintained System pressure boundary compromised	72 hrs 24 hrs	168 hrs 168 hrs	**72 hrs** **24 hrs**
	EFV-277		small line	System pressure boundary maintained System pressure boundary compromised	168 hrs 168 hrs	168 hrs 168 hrs	**168 hrs** **168 hrs**

Table 9-2 (cont.) WCGS Containment Isolation Valve CT Results – Application of Generic Analysis

Penetration #	Valve	Grouping Explanation a,c	Group & Calc #	Maintenance Activity Type	ICLERP @ CT:	ΔLERF @ CT:	Justified CT
	EFHV-49		I,B #5	System pressure boundary maintained System pressure boundary compromised	72 hrs 72 hrs	168 hrs 168 hrs	**72 hrs** **72 hrs**
P-74	EGHV-58		I,B #7	System pressure boundary maintained System pressure boundary compromised	168 hrs 168 hrs	168 hrs 168 hrs	**168 hrs** **168 hrs**
	EGV-090		small line	System pressure boundary maintained System pressure boundary compromised	168 hrs 168 hrs	168 hrs 168 hrs	**168 hrs** **168 hrs**
	EGV-204		I,B #7	System pressure boundary maintained System pressure boundary compromised	168 hrs 168 hrs	168 hrs 168 hrs	**168 hrs** **168 hrs**

Table 9-2 (cont.) WCGS Containment Isolation Valve CT Results – Application of Generic Analysis

Penetration #	Valve	Grouping Explanation a,c	Group & Calc #	Maintenance Activity Type	ICLERP @ CT:	ΔLERF @ CT:	Justified CT
	EGHV-127		I,B #7	System pressure boundary maintained System pressure boundary compromised	168 hrs 168 hrs	168 hrs 168 hrs	**168 hrs** **168 hrs**
P-75	EGHV-60		I,B #8	System pressure boundary maintained System pressure boundary compromised	72 hrs 24 hrs	168 hrs 168 hrs	**72 hrs** **24 hrs**
	EG-V372		small line	System pressure boundary maintained System pressure boundary compromised	168 hrs 168 hrs	168 hrs 168 hrs	**168 hrs** **168 hrs**
	EGHV-59		I,B #8	System pressure boundary maintained System pressure boundary compromised	72 hrs 72 hrs	168 hrs 168 hrs	**72 hrs** **72 hrs**

Table 9-2 (cont.) WCGS Containment Isolation Valve CT Results – Application of Generic Analysis

Penetration #	Valve	Grouping Explanation a,c	Group & Calc #	Maintenance Activity Type	ICLERP @ CT:	ΔLERF @ CT:	Justified CT
	EGHV-131		I,B #8	System pressure boundary maintained System pressure boundary compromised	72 hrs 72 hrs	168 hrs 168 hrs	**72 hrs** **72 hrs**
	EGHV-130		I,B #8	System pressure boundary maintained System pressure boundary compromised	72 hrs 24 hrs	168 hrs 168 hrs	**72 hrs** **24 hrs**
P-76	EGHV-62		I,B #8	System pressure boundary maintained System pressure boundary compromised	72 hrs 24 hrs	168 hrs 168 hrs	**72 hrs** **24 hrs**
	EGV-371		small line	System pressure boundary maintained System pressure boundary compromised	168 hrs 168 hrs	168 hrs 168 hrs	**168 hrs** **168 hrs**

Table 9-2 (cont.) WCGS Containment Isolation Valve CT Results – Application of Generic Analysis

Penetration #	Valve	Grouping Explanation a,c	Group & Calc #	Maintenance Activity Type	ICLERP @ CT:	ΔLERF @ CT:	Justified CT
	EGHV-61		I,B #8	System pressure boundary maintained System pressure boundary compromised	72 hrs 72 hrs	168 hrs 168 hrs	**72 hrs** **72 hrs**
	EGHV-132		I,B #8	System pressure boundary maintained System pressure boundary compromised	72 hrs 24 hrs	168 hrs 168 hrs	**72 hrs** **24 hrs**
	EGHV-133		I,B #8	System pressure boundary maintained System pressure boundary compromised	72 hrs 72 hrs	168 hrs 168 hrs	**72 hrs** **72 hrs**

Table 9-2 (cont.) WCGS Containment Isolation Valve CT Results – Application of Generic Analysis

Penetration #	Valve	Grouping Explanation a,c	Group & Calc #	Maintenance Activity Type	ICLERP @ CT:	ΔLERF @ CT:	Justified CT
P-78	BMV-045		I,A #1	System pressure boundary maintained System pressure boundary compromised	24 hrs 24 hrs	168 hrs 168 hrs	**24 hrs** **24 hrs**
	BMV-302		small line	System pressure boundary maintained System pressure boundary compromised	168 hrs 168 hrs	168 hrs 168 hrs	**168 hrs** **168 hrs**
	BMV-046		small line	System pressure boundary maintained System pressure boundary compromised	24 hrs 24 hrs	168 hrs 168 hrs	**24 hrs** **24 hrs**

Table 9-2 (cont.) WCGS Containment Isolation Valve CT Results – Application of Generic Analysis

Penetration #	Valve	Grouping Explanation a,c	Group & Calc #	Maintenance Activity Type	ICLERP @ CT:	ΔLERF @ CT:	Justified CT
P-79	EJHV-8701A		II,A #8 & I,C #23	System pressure boundary maintained System pressure boundary compromised	4 hrs 8 hrs	4 hrs 168 hrs	**4 hrs** **8 hrs**
	EJ8708A		I,C #23	System pressure boundary maintained System pressure boundary compromised	8 hrs 8 hrs	168 hrs 168 hrs	**8 hrs** **8 hrs**
	EJV-154		small line	System pressure boundary maintained System pressure boundary compromised	168 hrs 168 hrs	168 hrs 168 hrs	**168 hrs** **168 hrs**
P-80	BGHV-8105		II,B #3	System pressure boundary maintained System pressure boundary compromised	168 hrs 168 hrs	168 hrs 168 hrs	**168 hrs** **168 hrs**
	BGV-342		small line	System pressure boundary maintained System pressure boundary compromised	168 hrs 168 hrs	168 hrs 168 hrs	**168 hrs** **168 hrs**

Table 9-2 (cont.) WCGS Containment Isolation Valve CT Results – Application of Generic Analysis

Penetration #	Valve	Grouping Explanation a,c	Group & Calc #	Maintenance Activity Type	ICLERP @ CT:	ΔLERF @ CT:	Justified CT
	BG8381		II,B #3	System pressure boundary maintained System pressure boundary compromised	168 hrs 168 hrs	168 hrs 168 hrs	**168 hrs** **168 hrs**
P-82	EJHV-8809A		II,A #6	System pressure boundary maintained System pressure boundary compromised	72 hrs 72 hrs	4 hrs 4 hrs	**4 hrs** **4 hrs**
	EJV-054		II,A #6	System pressure boundary maintained System pressure boundary compromised	72 hrs 72 hrs	4 hrs 4 hrs	**4 hrs** **4 hrs**
	EP8818A		II,A #6	System pressure boundary maintained System pressure boundary compromised	4 hrs 168 hrs	4 hrs 4 hrs	**4 hrs** **4 hrs**

Table 9-2 (cont.) WCGS Containment Isolation Valve CT Results – Application of Generic Analysis

Penetration #	Valve	Grouping Explanation a,c	Group & Calc #	Maintenance Activity Type	ICLERP @ CT:	ΔLERF @ CT:	Justified CT
	EP8818B		II,A #6	System pressure boundary maintained System pressure boundary compromised	4 hrs 168 hrs	4 hrs 4 hrs	**4 hrs** **4 hrs**
	EJHCV-8890A		small line	System pressure boundary maintained System pressure boundary compromised	168 hrs 168 hrs	168 hrs 168 hrs	**168 hrs** **168 hrs**
	EJV-134, V-136		small line	System pressure boundary maintained System pressure boundary compromised	168 hrs 168 hrs	168 hrs 168 hrs	**168 hrs** **168 hrs**
	EJV-132		small line	System pressure boundary maintained System pressure boundary compromised	168 hrs 168 hrs	168 hrs 168 hrs	**168 hrs** **168 hrs**

Table 9-2 (cont.) WCGS Containment Isolation Valve CT Results – Application of Generic Analysis

Penetration #	Valve	Grouping Explanation a,c	Group & Calc #	Maintenance Activity Type	ICLERP @ CT:	ΔLERF @ CT:	Justified CT
	EJV-171, EJV-172, EJV-173, EJV-174		small line	System pressure boundary maintained System pressure boundary compromised	168 hrs 168 hrs	168 hrs 168 hrs	**168 hrs** **168 hrs**
P-83 to P-86	-		-	-	-	-	-
P-87	EMHV-8802A		II,A #5	System pressure boundary maintained System pressure boundary compromised	72 hrs 72 hrs	168 hrs 168 hrs	**72 hrs** **72 hrs**
	EMHV-8881		small line	System pressure boundary maintained System pressure boundary compromised	168 hrs 168 hrs	168 hrs 168 hrs	**168 hrs** **168 hrs**
	EMV-001		II,A #5	System pressure boundary maintained System pressure boundary compromised	72 hrs 168 hrs	168 hrs 168 hrs	**72 hrs** **168 hrs**

Table 9-2 (cont.) WCGS Containment Isolation Valve CT Results – Application of Generic Analysis

Penetration #	Valve	Grouping Explanation a,c	Group & Calc #	Maintenance Activity Type	ICLERP @ CT:	ΔLERF @ CT:	Justified CT
	EMV-002		II,A #5	System pressure boundary maintained System pressure boundary compromised	72 hrs 168 hrs	168 hrs 168 hrs	**72 hrs** **168 hrs**
	EMV-052, V-053, V-055, V-056, V-184, V-185		small line	System pressure boundary maintained System pressure boundary compromised	168 hrs 168 hrs	168 hrs 168 hrs	**168 hrs** **168 hrs**
	EMV-051		II,A #5	System pressure boundary maintained System pressure boundary compromised	72 hrs 72 hrs	168 hrs 168 hrs	**72 hrs** **72 hrs**
	EMV-186, V-187		small line	System pressure boundary maintained System pressure boundary compromised	168 hrs 168 hrs	168 hrs 168 hrs	**168 hrs** **168 hrs**

Table 9-2 (cont.) WCGS Containment Isolation Valve CT Results – Application of Generic Analysis

Penetration #	Valve	Grouping Explanation a,c	Group & Calc #	Maintenance Activity Type	ICLERP @ CT:	ΔLERF @ CT:	Justified CT
P-88	EMHV-8801A		II,A #11	System pressure boundary maintained System pressure boundary compromised	168 hrs 168 hrs	168 hrs 168 hrs	**168 hrs** **168 hrs**
	EMHV-8801B		II,A #11	System pressure boundary maintained System pressure boundary compromised	168 hrs 168 hrs	168 hrs 168 hrs	**168 hrs** **168 hrs**
	EMV-077		small line	System pressure boundary maintained System pressure boundary compromised	168 hrs 168 hrs	168 hrs 168 hrs	**168 hrs** **168 hrs**
	EMHV-8843		small line	System pressure boundary maintained System pressure boundary compromised	168 hrs 168 hrs	168 hrs 168 hrs	**168 hrs** **168 hrs**
	EMV-8815		II,A #11	System pressure boundary maintained System pressure boundary compromised	168 hrs 168 hrs	168 hrs 168 hrs	**168 hrs** **168 hrs**

Table 9-2 (cont.) WCGS Containment Isolation Valve CT Results – Application of Generic Analysis

Penetration #	Valve	Grouping Explanation a,c	Group & Calc #	Maintenance Activity Type	ICLERP @ CT:	ΔLERF @ CT:	Justified CT
	EMV-151		small line	System pressure boundary maintained System pressure boundary compromised	168 hrs 168 hrs	168 hrs 168 hrs	**168 hrs** **168 hrs**
P-89	ENHV-06		I,C #4	System pressure boundary maintained System pressure boundary compromised	168 hrs 168 hrs	168 hrs 168 hrs	**168 hrs** **168 hrs**
	ENV-076		small line	System pressure boundary maintained System pressure boundary compromised	168 hrs 168 hrs	168 hrs 168 hrs	**168 hrs** **168 hrs**
	ENV-013		I,C #4	System pressure boundary maintained System pressure boundary compromised	168 hrs 168 hrs	168 hrs 168 hrs	**168 hrs** **168 hrs**
P-91	N/A		II,A #9	System pressure boundary maintained System pressure boundary compromised	168 hrs 168 hrs	168 hrs 168 hrs	**168 hrs** **168 hrs**

Table 9-2 (cont.) WCGS Containment Isolation Valve CT Results – Application of Generic Analysis

Penetration #	Valve	Grouping Explanation a,c	Group & Calc #	Maintenance Activity Type	ICLERP @ CT:	ΔLERF @ CT:	Justified CT
P-92	EMHV-8964		II,A #1	System pressure boundary maintained System pressure boundary compromised	168 hrs 168 hrs	168 hrs 168 hrs	**168 hrs** **168 hrs**
	EMV-153		small line	System pressure boundary maintained System pressure boundary compromised	168 hrs 168 hrs	168 hrs 168 hrs	**168 hrs** **168 hrs**
	EMHV-8871		II,A #1	System pressure boundary maintained System pressure boundary compromised	168 hrs 168 hrs	168 hrs 168 hrs	**168 hrs** **168 hrs**
	EMV-038		II,A #1	System pressure boundary maintained System pressure boundary compromised	168 hrs 168 hrs	168 hrs 168 hrs	**168 hrs** **168 hrs**

Table 9-2 (cont.) WCGS Containment Isolation Valve CT Results – Application of Generic Analysis

Penetration #	Valve	Grouping Explanation a,c	Group & Calc #	Maintenance Activity Type	ICLERP @ CT:	ΔLERF @ CT:	Justified CT
P-93	SJHV-5		II,A #3	System pressure boundary maintained System pressure boundary compromised	24 hrs 168 hrs	168 hrs 168 hrs	**24 hrs** **168 hrs**
	SJHV-6		II,A #3	System pressure boundary maintained System pressure boundary compromised	24 hrs 24 hrs	168 hrs 168 hrs	**24 hrs** **24 hrs**
	SJV-069		II,A #3	System pressure boundary maintained System pressure boundary compromised	168 hrs 168 hrs	168 hrs 168 hrs	**168 hrs** **168 hrs**
	SJHV-127		II,A #3	System pressure boundary maintained System pressure boundary compromised	168 hrs 168 hrs	168 hrs 168 hrs	**168 hrs** **168 hrs**

Table 9-2 (cont.) WCGS Containment Isolation Valve CT Results – Application of Generic Analysis

Penetration #	Valve	Grouping Explanation a,c	Group & Calc #	Maintenance Activity Type	ICLERP @ CT:	ΔLERF @ CT:	Justified CT
P-95	SJHV-18		small line	System pressure boundary maintained System pressure boundary compromised	168 hrs 168 hrs	168 hrs 168 hrs	**168 hrs** **168 hrs**
	SJHV-19		small line	System pressure boundary maintained System pressure boundary compromised	168 hrs 168 hrs	168 hrs 168 hrs	**168 hrs** **168 hrs**
	SJV-066		small line	System pressure boundary maintained System pressure boundary compromised	168 hrs 168 hrs	168 hrs 168 hrs	**168 hrs** **168 hrs**
P-97	GSHV-18		small line	System pressure boundary maintained System pressure boundary compromised	168 hrs 168 hrs	168 hrs 168 hrs	**168 hrs** **168 hrs**
	GSHV-17		small line	System pressure boundary maintained System pressure boundary compromised	168 hrs 168 hrs	168 hrs 168 hrs	**168 hrs** **168 hrs**
	GSV-036		small line	System pressure boundary maintained System pressure boundary compromised	168 hrs 168 hrs	168 hrs 168 hrs	**168 hrs** **168 hrs**
P-97	GSHV-33		small line	System pressure boundary maintained System pressure boundary compromised	168 hrs 168 hrs	168 hrs 168 hrs	**168 hrs** **168 hrs**
	GSHV-34		small line	System pressure boundary maintained System pressure boundary compromised	168 hrs 168 hrs	168 hrs 168 hrs	**168 hrs** **168 hrs**
	GSV-052		small line	System pressure boundary maintained System pressure boundary compromised	168 hrs 168 hrs	168 hrs 168 hrs	**168 hrs** **168 hrs**

Table 9-2 (cont.) WCGS Containment Isolation Valve CT Results – Application of Generic Analysis

Penetration #	Valve	Grouping Explanation a,c	Group & Calc #	Maintenance Activity Type	ICLERP @ CT:	ΔLERF @ CT:	Justified CT
P-98	KBV-001		small line	System pressure boundary maintained System pressure boundary compromised	168 hrs 168 hrs	168 hrs 168 hrs	**168 hrs** **168 hrs**
	KBV-002		small line	System pressure boundary maintained System pressure boundary compromised	168 hrs 168 hrs	168 hrs 168 hrs	**168 hrs** **168 hrs**
P-99	GSHV-3		small line	System pressure boundary maintained System pressure boundary compromised	168 hrs 168 hrs	168 hrs 168 hrs	**168 hrs** **168 hrs**
	GSHV-4		small line	System pressure boundary maintained System pressure boundary compromised	168 hrs 168 hrs	168 hrs 168 hrs	**168 hrs** **168 hrs**
	GSHV-5		small line	System pressure boundary maintained System pressure boundary compromised	168 hrs 168 hrs	168 hrs 168 hrs	**168 hrs** **168 hrs**
	GSV-029		small line	System pressure boundary maintained System pressure boundary compromised	168 hrs 168 hrs	168 hrs 168 hrs	**168 hrs** **168 hrs**
P-99	GSHV-36		small line	System pressure boundary maintained System pressure boundary compromised	168 hrs 168 hrs	168 hrs 168 hrs	**168 hrs** **168 hrs**
	GSHV-37		small line	System pressure boundary maintained System pressure boundary compromised	168 hrs 168 hrs	168 hrs 168 hrs	**168 hrs** **168 hrs**
	GSV-056		small line	System pressure boundary maintained System pressure boundary compromised	168 hrs 168 hrs	168 hrs 168 hrs	**168 hrs** **168 hrs**

Table 9-2 (cont.) WCGS Containment Isolation Valve CT Results – Application of Generic Analysis

Penetration #	Valve	Grouping Explanation a,c	Group & Calc #	Maintenance Activity Type	ICLERP @ CT:	ΔLERF @ CT:	Justified CT
P-101	GSHV-12		small line	System pressure boundary maintained System pressure boundary compromised	168 hrs 168 hrs	168 hrs 168 hrs	**168 hrs** **168 hrs**
	GSHV-13		small line	System pressure boundary maintained System pressure boundary compromised	168 hrs 168 hrs	168 hrs 168 hrs	**168 hrs** **168 hrs**
	GSHV-14		small line	System pressure boundary maintained System pressure boundary compromised	168 hrs 168 hrs	168 hrs 168 hrs	**168 hrs** **168 hrs**
	GSV-033		small line	System pressure boundary maintained System pressure boundary compromised	168 hrs 168 hrs	168 hrs 168 hrs	**168 hrs** **168 hrs**
P-101	GSHV-31		small line	System pressure boundary maintained System pressure boundary compromised	168 hrs 168 hrs	168 hrs 168 hrs	**168 hrs** **168 hrs**
	GSHV-32		small line	System pressure boundary maintained System pressure boundary compromised	168 hrs 168 hrs	168 hrs 168 hrs	**168 hrs** **168 hrs**
	GSV-050		small line	System pressure boundary maintained System pressure boundary compromised	168 hrs 168 hrs	168 hrs 168 hrs	**168 hrs** **168 hrs**
P-103	Pressure Transmitter		small line	System pressure boundary maintained System pressure boundary compromised	168 hrs 168 hrs	168 hrs 168 hrs	**168 hrs** **168 hrs**

Table 9-2 (cont.) WCGS Containment Isolation Valve CT Results – Application of Generic Analysis

Penetration #	Valve	Grouping Explanation a,c	Group & Calc #	Maintenance Activity Type	ICLERP @ CT:	ΔLERF @ CT:	Justified CT
P-104	Pressure Transmitter		small line	System pressure boundary maintained System pressure boundary compromised	168 hrs 168 hrs	168 hrs 168 hrs	**168 hrs** **168 hrs**
E-256	Pressure Transmitter		small line	System pressure boundary maintained System pressure boundary compromised	168 hrs 168 hrs	168 hrs 168 hrs	**168 hrs** **168 hrs**
V-160	GTHZ-9		I,A #15 or I,A #16 if valves are open	System pressure boundary maintained System pressure boundary compromised or if valve is open: System pressure boundary maintained System pressure boundary compromised	12 hrs 12 hrs or: 24 hrs 24 hrs	168 hrs 168 hrs or: 168 hrs 168 hrs	**12 hrs** **12 hrs** **or:** **24 hrs** **24 hrs**
	GTHZ-8		I,A #15 or I,A #16 if valves are open	System pressure boundary maintained System pressure boundary compromised or if valve is open: System pressure boundary maintained System pressure boundary compromised	12 hrs 12 hrs or: 24 hrs 24 hrs	168 hrs 168 hrs or: 168 hrs 168 hrs	**12 hrs** **12 hrs** **or:** **24 hrs** **24 hrs**

Table 9-2 (cont.) WCGS Containment Isolation Valve CT Results – Application of Generic Analysis

Penetration #	Valve	Grouping Explanation a,c	Group & Calc #	Maintenance Activity Type	ICLERP @ CT:	ΔLERF @ CT:	Justified CT
	GTHZ-12		I,A #15 or I,A #16 if valves are open	System pressure boundary maintained System pressure boundary compromised or if valve is open: System pressure boundary maintained System pressure boundary compromised	12 hrs 12 hrs or: 24 hrs 24 hrs	168 hrs 168 hrs or: 168 hrs 168 hrs	**12 hrs** **12 hrs** **or:** **24 hrs** **24 hrs**
	GTHZ-11		I,A #15 or I,A #16 if valves are open	System pressure boundary maintained System pressure boundary compromised or if valve is open: System pressure boundary maintained System pressure boundary compromised	12 hrs 12 hrs or: 24 hrs 24 hrs	168 hrs 168 hrs or: 168 hrs 168 hrs	**12 hrs** **12 hrs** **or:** **24 hrs** **24 hrs**
	GTV0223		small line	System pressure boundary maintained System pressure boundary compromised	168 hrs 168 hrs	168 hrs 168 hrs	**168 hrs** **168 hrs**

Table 9-2 (cont.) WCGS Containment Isolation Valve CT Results – Application of Generic Analysis

Penetration #	Valve	Grouping Explanation a,c	Group & Calc #	Maintenance Activity Type	ICLERP @ CT:	ΔLERF @ CT:	Justified CT
V-161	GTHZ-7		I,A #15 or I,A #16 if valves are open	System pressure boundary maintained System pressure boundary compromised or if valve is open: System pressure boundary maintained System pressure boundary compromised	12 hrs 12 hrs or: 24 hrs 24 hrs	168 hrs 168 hrs or: 168 hrs 168 hrs	**12 hrs** **12 hrs** **or:** **24 hrs** **24 hrs**
	GTHZ-5		I,A #15 or I,A #16 if valves are open	System pressure boundary maintained System pressure boundary compromised or if valve is open: System pressure boundary maintained System pressure boundary compromised	12 hrs 12 hrs or: 24 hrs 24 hrs	168 hrs 168 hrs or: 168 hrs 168 hrs	**12 hrs** **12 hrs** **or:** **24 hrs** **24 hrs**
	GTHZ-4		I,A #15 or I,A #16 if valves are open	System pressure boundary maintained System pressure boundary compromised or if valve is open: System pressure boundary maintained System pressure boundary compromised	12 hrs 12 hrs or: 24 hrs 24 hrs	168 hrs 168 hrs or: 168 hrs 168 hrs	**12 hrs** **12 hrs** **or:** **24 hrs** **24 hrs**

Table 9-2 (cont.) WCGS Containment Isolation Valve CT Results – Application of Generic Analysis

Penetration #	Valve	Grouping Explanation a,c	Group & Calc #	Maintenance Activity Type	ICLERP @ CT:	ΔLERF @ CT:	Justified CT
	GTHZ-6		I,A #15 or I,A #16 if valves are open	System pressure boundary maintained System pressure boundary compromised or if valve is open: System pressure boundary maintained System pressure boundary compromised	12 hrs 12 hrs or: 24 hrs 24 hrs	168 hrs 168 hrs or: 168 hrs 168 hrs	**12 hrs** **12 hrs** **or:** **24 hrs** **24 hrs**
	GTV0222		small line	System pressure boundary maintained System pressure boundary compromised	168 hrs 168 hrs	168 hrs 168 hrs	**168 hrs** **168 hrs**

10 PLANT SPECIFIC ANALYSIS

This section documents the plant specific analysis that was done for WCGS.

The plant specific study involved taking WCGS-specific parameters and implementing them into the generic probabilistic evaluation of Section 8.2 to get actual WCGS-specific results. The purpose of this study was to determine how many more of WCGS's CIVs could be justified for longer CT relaxations in addition to those justified under the generic analysis. The generic analysis was a conservative assessment, and therefore, applicable to all Westinghouse Owner's Group plants, including WCGS. A plant specific application will result in additional CT improvements. Note that the threshold containment hole size, for penetrations from the containment atmosphere to the outside environment, that can provide a large release remained at 2 inches. That is, containment hole sizes greater than 2 inches can result in a large release and hole sizes of 2 inches or less cannot.

First, the WCGS CIVs that were unable to meet the full 168 hour CT extension under the generic analysis were identified (see Table 9-2 of Section 9). Next, the necessary input parameters relative to WCGS were obtained and the analysis of Sections 8.2 and 8.3 was repeated using the WCGS specific parameters. Re-doing the analysis plant specifically made it possible to determine whether or not longer CTs could be justified for WCGS.

The re-analysis involved re-calculation of ICLERPs and ΔLERFs (see the methodology of Section 8.2) using WCGS specific parameters for those penetrations that could not be justified to the full 168 hour CT under the application of the generic analysis of Section 9.

The methodology, terminology, basis, and assumptions that were applicable in the generic analysis (of Sections 8.2 and 8.3) are all applicable to this WCGS specific analysis. The only difference is that WCGS input parameters are used, rather than generic parameters. The WCGS input parameters are listed in Tables 9-1a through 9-1d. Since WCGS does not quantify all external events, the value for CDF_T was set to 1.0E-04/yr.

10.1 CALCULATIONS

The ICLERP and/or ΔLERF (depending on which was more limiting) was re-calculated with the WCGS-specific input parameters of Tables 9-1a, 9-1b, 9-1c, and 9-1d for the CIVs with CTs less than 168 hrs. The inputs were used in the appropriate ICLERP and ΔLERF equations discussed in Sections 8.2.2 through 8.2.4. Similar to Step 5 of Section 9.1, Guidelines A and B had to be followed when choosing which valve type to apply to the penetration, however this time, Guidelines A and B are Wolf-Creek specific.

a,c

a,c

Table 10-1 summarizes those CIVs that could not meet the full 168 hour CT under the application of the generic analysis. It identifies which CIVs received longer CTs due to the plant specific probabilistic re-evaluation. Note, not all CIVs were able to be justified for longer CTs due to failure probability and/or penetration configuration.

Table 10-1 Re-Calculated Completion Times for the Plant Specific Analysis (only for the CIVs with a CT less than 168 hrs from the application of the generic results)

Penetration: Valve ID	Grouping Explanation (from Table 9-2) a,c	Group & Calc #	Maintenance Activity Type	Based on Application of Generic Results			Based on Application of Wolf Creek Results		
				ICLERP @ CT:	ΔLERF @ CT:	Justified CT	ICLERP @ CT:	ΔLERF @ CT:	Justified CT
P-13: ENHV-07	[ ]	I,C #23	System pressure boundary maintained	8 hr	168 hr	8 hr	8 hr	168 hr	8 hr
			System pressure boundary compromised	4 hr	168 hr	4 hr	4 hr	168 hr	4 hr
P-14: EJHV-8811B		I,C #23	System pressure boundary maintained	8 hr	168 hr	8 hr	8 hr	168 hr	8 hr
			System pressure boundary compromised	4 hr	168 hr	4 hr	4 hr	168 hr	4 hr
P-15: EJHV-8811A		I,C #23	System pressure boundary maintained	8 hr	168 hr	8 hr	8 hr	168 hr	8 hr
			System pressure boundary compromised	4 hr	168 hr	4 hr	4 hr	168 hr	4 hr
P-16: ENHV-01		I,C #23	System pressure boundary maintained	8 hr	168 hr	8 hr	8 hr	168 hr	8 hr
			System pressure boundary compromised	4 hr	168 hr	4 hr	4 hr	168 hr	4 hr
P-21: EJHV-8840		II,A #32	System pressure boundary maintained	72 hr	168 hr	72 hr	72 hr	168 hr	72 hr
			System pressure boundary compromised	72 hr	168 hr	72 hr	72 hr	168 hr	72 hr
P-21: EJV-056	[ ]	II,A #32	System pressure boundary maintained	72 hr	168 hr	72 hr	72 hr	168 hr	72 hr
			System pressure boundary compromised	72 hr	168 hr	72 hr	72 hr	168 hr	72 hr

Table 10-1 (cont.) **Re-Calculated Completion Times for the Plant Specific Analysis**
(only for the CIVs with a CT less than 168 hrs from the application of the generic results)

Penetration: Valve ID	Grouping Explanation (from Table 9-2) a,c	Group & Calc #	Maintenance Activity Type	Based on Application of Generic Results			Based on Application of Wolf Creek Results		
				ICLERP @ CT:	ΔLERF @ CT:	Justified CT	ICLERP @ CT:	ΔLERF @ CT:	Justified CT
P-21: EJ-8841A		II,A #32	System pressure boundary maintained	72 hr	168 hr	72 hr	72 hr	168 hr	72 hr
			System pressure boundary compromised	168 hr	168 hr	168 hr	168 hr	168 hr	168 hr
P-21: EJ-8841B		II,A #32	System pressure boundary maintained	72 hr	168 hr	72 hr	72 hr	168 hr	72 hr
			System pressure boundary compromised	168 hr	168 hr	168 hr	168 hr	168 hr	168 hr
P-23: BGHV-8160		II,B #39	System pressure boundary maintained	24 hr	168 hr	24 hrs	24 hr	168 hr	24 hr
			System pressure boundary compromised	24 hr	168 hr	24 hrs	48 hr	168 hr	48 hr
P-23: BGV-363		II,B #39	System pressure boundary maintained	72 hr	168 hr	72 hr	168 hr	168 hr	168 hr
			System pressure boundary compromised	72 hr	168 hr	72 hr	168 hr	168 hr	168 hr
P-23: BGHV-8152		II,B #39	System pressure boundary maintained	24 hr	168 hr	24 hr	24 hr	168 hr	24 hr
			System pressure boundary compromised	24 hr	168 hr	24 hr	24 hr	168 hr	24 hr

Table 10-1 (cont.) **Re-Calculated Completion Times for the Plant Specific Analysis**
(only for the CIVs with a CT less than 168 hrs from the application of the generic results)

Penetration: Valve ID	Grouping Explanation (from Table 9-2) a,c	Group & Calc #	Maintenance Activity Type	Based on Application of Generic Results			Based on Application of Wolf Creek Results		
				ICLERP @ CT:	ΔLERF @ CT:	Justified CT	ICLERP @ CT:	ΔLERF @ CT:	Justified CT
P-26: HBHV-7176		I,B #20	System pressure boundary maintained	72 hr	168 hr	72 hr	72 hr	168 hr	72 hr
			System pressure boundary compromised	24 hr	168 hr	24 hr	48 hr	168 hr	48 hr
P-26: HBHV-7136		I,B #20	System pressure boundary maintained	72 hr	168 hr	72 hr	72 hr	168 hr	72 hr
			System pressure boundary compromised	72 hr	168 hr	72 hr	72 hr	168 hr	72 hr
P-27: EJHV-8809B		II,A #33	System pressure boundary maintained	72 hr	4 hr	4 hr	72 hr	4 hr	4 hr
			System pressure boundary compromised	72 hr	4 hr	4 hr	72 hr	4 hr	4 hr
P-27: EJV-058		II,A #33	System pressure boundary maintained	72 hr	4 hr	4 hr	72 hr	4 hr	4 hr
			System pressure boundary compromised	72 hr	4 hr	4 hr	72 hr	4 hr	4 hr
P-27: EP-8818C		II,A #33	System pressure boundary maintained	4 hr	4 hr	4 hr	8 hr	4 hr	4 hr
			System pressure boundary compromised	168 hr	4 hr	4 hr	168 hr	4 hr	4 hr

Table 10-1 (cont.) **Re-Calculated Completion Times for the Plant Specific Analysis**
(only for the CIVs with a CT less than 168 hrs from the application of the generic results)

Penetration: Valve ID	Grouping Explanation (from Table 9-2) a,c	Group & Calc #	Maintenance Activity Type	Based on Application of Generic Results			Based on Application of Wolf Creek Results		
				ICLERP @ CT:	ΔLERF @ CT:	Justified CT	ICLERP @ CT:	ΔLERF @ CT:	Justified CT
P-27: EP-8818D		II,A #33	System pressure boundary maintained	4 hr	4 hr	4 hr	8 hr	4 hr	4 hr
			System pressure boundary compromised	168 hr	4 hr	4 hr	168 hr	4 hr	4 hr
P-28: EFHV-32		I,B #20	System pressure boundary maintained	72 hr	168 hr	72 hr	168 hr	168 hr	168 hr
			System pressure boundary compromised	72 hr	168 hr	72 hr	168 hr	168 hr	168 hr
P-28: EFHV-34		I,B #20	System pressure boundary maintained	72 hr	168 hr	72 hr	168 hr	168 hr	168 hr
			System pressure boundary compromised	24 hr	168 hr	24 hr	72 hr	168 hr	72 hr
P-29: EFHV-46		I,B #20	System pressure boundary maintained	72 hr	168 hr	72 hr	168 hr	168 hr	168 hr
			System pressure boundary compromised	24 hr	168 hr	24 hr	72 hr	168 hr	72 hr
P-29: EFHV-50		I,B #20	System pressure boundary maintained	72 hr	168 hr	72 hr	168 hr	168 hr	168 hr
			System pressure boundary compromised	72 hr	168 hr	72 hr	168 hr	168 hr	168 hr

Table 10-1 (cont.) **Re-Calculated Completion Times for the Plant Specific Analysis**
(only for the CIVs with a CT less than 168 hrs from the application of the generic results)

Penetration: Valve ID	Grouping Explanation (from Table 9-2) a,c	Group & Calc #	Maintenance Activity Type	Based on Application of Generic Results			Based on Application of Wolf Creek Results		
				ICLERP @ CT:	ΔLERF @ CT:	Justified CT	ICLERP @ CT:	ΔLERF @ CT:	Justified CT
P-34: Flanges		I,A #1	System pressure boundary maintained	24 hr	168 hr	24 hr	24 hr	168 hr	24 hr
			System pressure boundary compromised	24 hr	168 hr	24 hr	24 hr	168 hr	24 hr
P-48: EMHV-8802B		II,A #32	System pressure boundary maintained	72 hr	168 hr	72 hr	72 hr	168 hr	72 hr
			System pressure boundary compromised	72 hr	168 hr	72 hr	72 hr	168 hr	72 hr
P-48: EMV-003		II,A #32	System pressure boundary maintained	72 hr	168 hr	72 hr	72 hr	168 hr	72 hr
			System pressure boundary compromised	168 hr	168 hr	168 hr	168 hr	168 hr	168 hr
P-48: EMV-004		II,A #32	System pressure boundary maintained	72 hr	168 hr	72 hr	72 hr	168 hr	72 hr
			System pressure boundary compromised	168 hr	168 hr	168 hr	168 hr	168 hr	168 hr

Table 10-1 (cont.) **Re-Calculated Completion Times for the Plant Specific Analysis**
(only for the CIVs with a CT less than 168 hrs from the application of the generic results)

Penetration: Valve ID	Grouping Explanation (from Table 9-2) a,c	Group & Calc #	Maintenance Activity Type	Based on Application of Generic Results			Based on Application of Wolf Creek Results		
				ICLERP @ CT:	ΔLERF @ CT:	Justified CT	ICLERP @ CT:	ΔLERF @ CT:	Justified CT
P-48: EMV-059		II,A #32	System pressure boundary maintained	72 hr	168 hr	72 hr	72 hr	168 hr	72 hr
			System pressure boundary compromised	72 hr	168 hr	72 hr	72 hr	168 hr	72 hr
P-49: EMHV-8835		II,A #34	System pressure boundary maintained	72 hr	4 hr	4 hr	72 hr	4 hr	4 hr
			System pressure boundary compromised	72 hr	4 hr	4 hr	72 hr	4 hr	4 hr
P-49: EPV-020		II,A #34	System pressure boundary maintained	4 hr	4 hr	4 hr	8 hr	4 hr	4 hr
			System pressure boundary compromised	168 hr	168 hr	168 hr	168 hr	168 hr	168 hr
P-49: EPV-010		II,A #34	System pressure boundary maintained	4 hr	4 hr	4 hr	8 hr	4 hr	4 hr
			System pressure boundary compromised	168 hr	168 hr	168 hr	168 hr	168 hr	168 hr

Table 10-1 (cont.) **Re-Calculated Completion Times for the Plant Specific Analysis**
(only for the CIVs with a CT less than 168 hrs from the application of the generic results)

Penetration: Valve ID	Grouping Explanation (from Table 9-2) a,c	Group & Calc #	Maintenance Activity Type	Based on Application of Generic Results			Based on Application of Wolf Creek Results		
				ICLERP @ CT:	ΔLERF @ CT:	Justified CT	ICLERP @ CT:	ΔLERF @ CT:	Justified CT
P-49: EPV-040		II,A #34	System pressure boundary maintained	4 hr	4 hr	4 hr	8 hr	4 hr	4 hr
			System pressure boundary compromised	168 hr	168 hr	168 hr	168 hr	168 hr	168 hr
P-49: EPV-030		II,A #34	System pressure boundary maintained	4 hr	4 hr	4 hr	8 hr	4 hr	4 hr
			System pressure boundary compromised	168 hr	168 hr	168 hr	168 hr	168 hr	168 hr
P-49: EMV-067		II,A #34	System pressure boundary maintained	72 hr	4 hr	4 hr	72 hr	4 hr	4 hr
			System pressure boundary compromised	72 hr	4 hr	4 hr	72 hr	4 hr	4 hr

Table 10-1 (cont.) **Re-Calculated Completion Times for the Plant Specific Analysis**
(only for the CIVs with a CT less than 168 hrs from the application of the generic results)

Penetration: Valve ID	Grouping Explanation (from Table 9-2) a,c	Group & Calc #	Maintenance Activity Type	Based on Application of Generic Results			Based on Application of Wolf Creek Results		
				ICLERP @ CT:	ΔLERF @ CT:	Justified CT	ICLERP @ CT:	ΔLERF @ CT:	Justified CT
P-52: EJHV-8701B		II,A #35 & I,C #23	System pressure boundary maintained	4 hr	4 hr	4 hr	4 hr	4 hr	4 hr
			System pressure boundary compromised	8 hr	168 hr	8 hr	8 hr	168 hr	8 hr
P-52: EJ-8708B		I,C #23	System pressure boundary maintained	8 hr	168 hr	8 hr	8 hr	168 hr	8 hr
			System pressure boundary compromised	8 hr	168 hr	8 hr	8 hr	168 hr	8 hr
P-53: ECV-084		I,A #1	System pressure boundary maintained	24 hr	168 hr	24 hr	24 hr	168 hr	24 hr
			System pressure boundary compromised	24 hr	168 hr	24 hr	24 hr	168 hr	24 hr
P-53: ECV-083		I,A #1	System pressure boundary maintained	24 hr	168 hr	24 hr	24 hr	168 hr	24 hr
			System pressure boundary compromised	24 hr	168 hr	24 hr	24 hr	168 hr	24 hr
P-54: ECV-087		I,A #1	System pressure boundary maintained	24 hr	168 hr	24 hr	24 hr	168 hr	24 hr
			System pressure boundary compromised	24 hr	168 hr	24 hr	24 hr	168 hr	24 hr
P-54: ECV-088		I,A #1	System pressure boundary maintained	24 hr	168 hr	24 hr	24 hr	168 hr	24 hr
			System pressure boundary compromised	24 hr	168 hr	24 hr	24 hr	168 hr	24 hr

Table 10-1 (cont.) **Re-Calculated Completion Times for the Plant Specific Analysis**
(only for the CIVs with a CT less than 168 hrs from the application of the generic results)

Penetration: Valve ID	Grouping Explanation (from Table 9-2) a,c	Group & Calc #	Maintenance Activity Type	Based on Application of Generic Results			Based on Application of Wolf Creek Results		
				ICLERP @ CT:	ΔLERF @ CT:	Justified CT	ICLERP @ CT:	ΔLERF @ CT:	Justified CT
P-55: ECV-095		I,A #1	System pressure boundary maintained	24 hr	168 hr	24 hr	24 hr	168 hr	24 hr
			System pressure boundary compromised	24 hr	168 hr	24 hr	24 hr	168 hr	24 hr
P-55: ECV-096		I,A #1	System pressure boundary maintained	24 hr	168 hr	24 hr	24 hr	168 hr	24 hr
			System pressure boundary compromised	24 hr	168 hr	24 hr	24 hr	168 hr	24 hr
P-64: SJHV-128		II,A #31	System pressure boundary maintained	12 hr	168 hr	12 hr	12 hr	168 hr	12 hr
			System pressure boundary compromised	168 hr	168 hr	168 hr	168 hr	168 hr	168 hr
P-65: GSHV-20		I,A #1	System pressure boundary maintained	24 hr	168 hr	24 hr	24 hr	168 hr	24 hr
			System pressure boundary compromised	24 hr	168 hr	24 hr	24 hr	168 hr	24 hr
P-65: GSHV-21		I,A #1	System pressure boundary maintained	24 hr	168 hr	24 hr	24 hr	168 hr	24 hr
			System pressure boundary compromised	24 hr	168 hr	24 hr	24 hr	168 hr	24 hr

Table 10-1 (cont.) **Re-Calculated Completion Times for the Plant Specific Analysis**
(only for the CIVs with a CT less than 168 hrs from the application of the generic results)

Penetration: Valve ID	Grouping Explanation (from Table 9-2) a,c	Group & Calc #	Maintenance Activity Type	Based on Application of Generic Results			Based on Application of Wolf Creek Results		
				ICLERP @ CT:	ΔLERF @ CT:	Justified CT	ICLERP @ CT:	ΔLERF @ CT:	Justified CT
P-69: SJHV-12		II,A #30a	System pressure boundary maintained	24 hr	168 hr	24 hr	24 hr	168 hr	24 hr
			System pressure boundary compromised	168 hr	168 hr	168 hr	168 hr	168 hr	168 hr
P-69: SJHV-13		II,A #30a	System pressure boundary maintained	24 hr	168 hr	24 hr	24 hr	168 hr	24 hr
			System pressure boundary compromised	24 hr	168 hr	24 hr	24 hr	168 hr	24 hr
P-71: EFHV-31		I,B #20	System pressure boundary maintained	72 hr	168 hr	72 hr	168 hr	168 hr	168 hr
			System pressure boundary compromised	72 hr	168 hr	72 hr	168 hr	168 hr	168 hr
P-71: EFHV-33		I,B #20	System pressure boundary maintained	72 hr	168 hr	72 hr	168 hr	168 hr	168 hr
			System pressure boundary compromised	24 hr	168 hr	24 hr	72 hr	168 hr	72 hr
P-73: EFHV-45		I,B #20	System pressure boundary maintained	72 hr	168 hr	72 hr	168 hr	168 hr	168 hr
			System pressure boundary compromised	24 hr	168 hr	24 hr	72 hr	168 hr	72 hr

Table 10-1 (cont.) **Re-Calculated Completion Times for the Plant Specific Analysis**
(only for the CIVs with a CT less than 168 hrs from the application of the generic results)

Penetration: Valve ID	Grouping Explanation (from Table 9-2) a,c	Group & Calc #	Maintenance Activity Type	Based on Application of Generic Results			Based on Application of Wolf Creek Results		
				ICLERP @ CT:	ΔLERF @ CT:	Justified CT	ICLERP @ CT:	ΔLERF @ CT:	Justified CT
P-73: EFHV-49		I,B #20	System pressure boundary maintained	72 hr	168 hr	72 hr	168 hr	168 hr	168 hr
			System pressure boundary compromised	72 hr	168 hr	72 hr	168 hr	168 hr	168 hr
P-75: EGHV-60		I,B #22a	System pressure boundary maintained	72 hr	168 hr	72 hr	168 hr	168 hr	168 hr
			System pressure boundary compromised	24 hr	168 hr	24 hr	72 hr	168 hr	72 hr
P-75: EGHV-59		I,B #22a	System pressure boundary maintained	72 hr	168 hr	72 hr	168 hr	168 hr	168 hr
			System pressure boundary compromised	72 hr	168 hr	72 hr	168 hr	168 hr	168 hr
P-75: EGHV-131		I,B #22a	System pressure boundary maintained	72 hr	168 hr	72 hr	72 hr	168 hr	72 hr
			System pressure boundary compromised	72 hr	168 hr	72 hr	72 hr	168 hr	72 hr

Table 10-1 (cont.) **Re-Calculated Completion Times for the Plant Specific Analysis**
(only for the CIVs with a CT less than 168 hrs from the application of the generic results)

Penetration: Valve ID	Grouping Explanation (from Table 9-2) a,c	Group & Calc #	Maintenance Activity Type	Based on Application of Generic Results			Based on Application of Wolf Creek Results		
				ICLERP @ CT:	ΔLERF @ CT:	Justified CT	ICLERP @ CT:	ΔLERF @ CT:	Justified CT
P-75: EGHV-130		I,B #22a	System pressure boundary maintained	72 hr	168 hr	72 hr	72 hr	168 hr	72 hr
			System pressure boundary compromised	24 hr	168 hr	24 hr	24 hr	168 hr	24 hr
P-76: EGHV-62		I,B #22a	System pressure boundary maintained	72 hr	168 hr	72 hr	168 hr	168 hr	168 hr
			System pressure boundary compromised	24 hr	168 hr	24 hr	72 hr	168 hr	72 hr
P-76: EGHV-61		I,B #22a	System pressure boundary maintained	72 hr	168 hr	72 hr	168 hr	168 hr	168 hr
			System pressure boundary compromised	72 hr	168 hr	72 hr	168 hr	168 hr	168 hr
P-76: EGHV-132		I,B #22a	System pressure boundary maintained	72 hr	168 hr	72 hr	72 hr	168 hr	72 hr
			System pressure boundary compromised	24 hr	168 hr	24 hr	24 hr	168 hr	24 hr

Table 10-1 (cont.) **Re-Calculated Completion Times for the Plant Specific Analysis**
(only for the CIVs with a CT less than 168 hrs from the application of the generic results)

Penetration: Valve ID	Grouping Explanation (from Table 9-2) a,c	Group & Calc #	Maintenance Activity Type	Based on Application of Generic Results			Based on Application of Wolf Creek Results		
				ICLERP @ CT:	ΔLERF @ CT:	Justified CT	ICLERP @ CT:	ΔLERF @ CT:	Justified CT
P-76: EGHV-133		I,B #22a	System pressure boundary maintained	72 hr	168 hr	72 hr	72 hr	168 hr	72 hr
			System pressure boundary compromised	72 hr	168 hr	72 hr	72 hr	168 hr	72 hr
P-78: BMV-045		I,A #1	System pressure boundary maintained	24 hr	168 hr	24 hr	24 hr	168 hr	24 hr
			System pressure boundary compromised	24 hr	168 hr	24 hr	24 hr	168 hr	24 hr
P-78: BMV-046		I,A #1	System pressure boundary maintained	24 hr	168 hr	24 hr	24 hr	168 hr	24 hr
			System pressure boundary compromised	24 hr	168 hr	24 hr	24 hr	168 hr	24 hr
P-79: EJHV-8701A		II,A #35 & I,C #23	System pressure boundary maintained	4 hr	4 hr	4 hr	4 hr	4 hr	4 hr
			System pressure boundary compromised	8 hr	168 hr	8 hr	8 hr	168 hr	8 hr

Table 10-1 (cont.) **Re-Calculated Completion Times for the Plant Specific Analysis**
(only for the CIVs with a CT less than 168 hrs from the application of the generic results)

Penetration: Valve ID	Grouping Explanation (from Table 9-2) a,c	Group & Calc #	Maintenance Activity Type	Based on Application of Generic Results			Based on Application of Wolf Creek Results		
				ICLERP @ CT:	ΔLERF @ CT:	Justified CT	ICLERP @ CT:	ΔLERF @ CT:	Justified CT
P-79: EJ8708A		I,C #23	System pressure boundary maintained	8 hr	168 hr	8 hr	8 hr	168 hr	8 hr
			System pressure boundary compromised	8 hr	168 hr	8 hr	8 hr	168 hr	8 hr
P-82: EJHV-8809A		II,A #33	System pressure boundary maintained	72 hr	4 hr	4 hr	72 hr	4 hr	4 hr
			System pressure boundary compromised	72 hr	4 hr	4 hr	72 hr	4 hr	4 hr
P-82: EJV-054		II,A #33	System pressure boundary maintained	72 hr	4 hr	4 hr	72 hr	4 hr	4 hr
			System pressure boundary compromised	72 hr	4 hr	4 hr	72 hr	4 hr	4 hr
P-82: EP8818A		II,A #33	System pressure boundary maintained	4 hr	4 hr	4 hr	8 hr	4 hr	4 hr
			System pressure boundary compromised	168 hr	4 hr	4 hr	168 hr	4 hr	4 hr
P-82: EP8818B		II,A #33	System pressure boundary maintained	4 hr	4 hr	4 hr	8 hr	4 hr	4 hr
			System pressure boundary compromised	168 hr	4 hr	4 hr	168 hr	4 hr	4 hr
P-87: EMHV-8802A		II,A #32	System pressure boundary maintained	72 hr	168 hr	72 hr	72 hr	168 hr	72 hr
			System pressure boundary compromised	72 hr	168 hr	72 hr	72 hr	168 hr	72 hr

Table 10-1 (cont.) **Re-Calculated Completion Times for the Plant Specific Analysis**
(only for the CIVs with a CT less than 168 hrs from the application of the generic results)

Penetration: Valve ID	Grouping Explanation (from Table 9-2) a,c	Group & Calc #	Maintenance Activity Type	Based on Application of Generic Results			Based on Application of Wolf Creek Results		
				ICLERP @ CT:	ΔLERF @ CT:	Justified CT	ICLERP @ CT:	ΔLERF @ CT:	Justified CT
P-87: EMV-001		II,A #32	System pressure boundary maintained	72 hr	168 hr	72 hr	72 hr	168 hr	72 hr
			System pressure boundary compromised	168 hr	168 hr	168 hr	168 hr	168 hr	168 hr
P-87: EMV-002		II,A #32	System pressure boundary maintained	72 hr	168 hr	72 hr	72 hr	168 hr	72 hr
			System pressure boundary compromised	168 hr	168 hr	168 hr	168 hr	168 hr	168 hr
P-87: EMV-051		II,A #32	System pressure boundary maintained	72 hr	168 hr	72 hr	72 hr	168 hr	72 hr
			System pressure boundary compromised	72 hr	168 hr	72 hr	72 hr	168 hr	72 hr
P-93: SJHV-5		II,A #30b	System pressure boundary maintained	24 hr	168 hr	24 hr	48 hr	168 hr	48 hr
			System pressure boundary compromised	168 hr	168 hr	168 hr	168 hr	168 hr	168 hr

Table 10-1 (cont.) **Re-Calculated Completion Times for the Plant Specific Analysis**
(only for the CIVs with a CT less than 168 hrs from the application of the generic results)

Penetration: Valve ID	Grouping Explanation (from Table 9-2) a,c	Group & Calc #	Maintenance Activity Type	Based on Application of Generic Results			Based on Application of Wolf Creek Results		
				ICLERP @ CT:	ΔLERF @ CT:	Justified CT	ICLERP @ CT:	ΔLERF @ CT:	Justified CT
P-93: SJHV-6		II,A #30b	System pressure boundary maintained	24 hr	168 hr	24 hr	48 hr	168 hr	48 hr
			System pressure boundary compromised	24 hr	168 hr	24 hr	48 hr	168 hr	48 hr
V-160: GTHZ-9		I,A #15 or I,A #15a if valves are open	System pressure boundary maintained	12 hr	168 hr	12 hr	12 hr	168 hr	12 hr
			System pressure boundary compromised	12 hr	168 hr	12 hr	12 hr	168 hr	12 hr
			or if valve is open:	or:	or:	or:	or:	or:	or:
			System pressure boundary maintained	24 hr	168 hr	24 hr	24 hr	168 hr	24 hr
			System pressure boundary compromised	24 hr	168 hr	24 hr	24 hr	168 hr	24 hr
V-160: GTHZ-8		I,A #15 or I,A #15a if valves are open	System pressure boundary maintained	12 hr	168 hr	12 hrs	12 hr	168 hr	12 hr
			System pressure boundary compromised	12 hr	168 hr	12 hrs	12 hr	168 hr	12 hr
			or if valve is open:	or:	or:	or:	or:	or:	or:
			System pressure boundary maintained	24 hr	168 hr	24 hr	24 hr	168 hr	24 hr
			System pressure boundary compromised	24 hr	168 hr	24 hr	24 hr	168 hr	24 hr

Table 10-1 (cont.) **Re-Calculated Completion Times for the Plant Specific Analysis**
(only for the CIVs with a CT less than 168 hrs from the application of the generic results)

Penetration: Valve ID	Grouping Explanation (from Table 9-2) a,c	Group & Calc #	Maintenance Activity Type	Based on Application of Generic Results			Based on Application of Wolf Creek Results		
				ICLERP @ CT:	ΔLERF @ CT:	Justified CT	ICLERP @ CT:	ΔLERF @ CT:	Justified CT
V-160: GTHZ-12		I,A #15 or I,A #15a if valves are open	System pressure boundary maintained	12 hr	168 hr	12 hr	12 hr	168 hr	12 hr
			System pressure boundary compromised	12 hr	168 hr	12 hr	12 hr	168 hr	12 hr
			or if valve is open:	or:	or:	or:	or:	or:	or:
			System pressure boundary maintained	24 hr	168 hr	24 hr	48 hr	168 hr	48 hr
			System pressure boundary compromised	24 hr	168 hr	24 hr	48 hr	168 hr	48 hr
V-160: GTHZ-11		I,A #15 or I,A #15a if valves are open	System pressure boundary maintained	12 hr	168 hr	12 hr	12 hr	168 hr	12 hr
			System pressure boundary compromised	12 hr	168 hr	12 hr	12 hr	168 hr	12 hr
			or if valve is open:	or:	or:	or:	or:	or:	or:
			System pressure boundary maintained	24 hr	168 hr	24 hr	48 hr	168 hr	48 hr
			System pressure boundary compromised	24 hr	168 hr	24 hr	48 hr	168 hr	48 hr
V-161: GTHZ-7		I,A #15 or I,A #15a if valves are open	System pressure boundary maintained	12 hr	168 hr	12 hr	12 hr	168 hr	12 hr
			System pressure boundary compromised	12 hr	168 hr	12 hr	12 hr	168 hr	12 hr
			or if valve is open:	or:	or:	or:	or:	or:	or:
			System pressure boundary maintained	24 hr	168 hr	24 hr	24 hr	168 hr	24 hr
			System pressure boundary compromised	24 hr	168 hr	24 hr	24 hr	168 hr	24 hr

Table 10-1 (cont.) **Re-Calculated Completion Times for the Plant Specific Analysis**
(only for the CIVs with a CT less than 168 hrs from the application of the generic results)

Penetration: Valve ID	Grouping Explanation (from Table 9-2) a,c	Group & Calc #	Maintenance Activity Type	Based on Application of Generic Results			Based on Application of Wolf Creek Results		
				ICLERP @ CT:	ΔLERF @ CT:	Justified CT	ICLERP @ CT:	ΔLERF @ CT:	Justified CT
V-161: GTHZ-5		I,A #15 or I,A #15a if valves are open	System pressure boundary maintained	12 hr	168 hr	12 hr	12 hr	168 hr	12 hr
			System pressure boundary compromised	12 hr	168 hr	12 hr	12 hr	168 hr	12 hr
			or if valve is open:	or:	or:	or:	or:	or:	or:
			System pressure boundary maintained	24 hr	168 hr	24 hr	48 hr	168 hr	48 hr
			System pressure boundary compromised	24 hr	168 hr	24 hr	48 hr	168 hr	48 hr
V-161: GTHZ-4		I,A #15 or I,A #15a if valves are open	System pressure boundary maintained	12 hr	168 hr	12 hrs	12 hr	168 hr	12 hr
			System pressure boundary compromised	12 hr	168 hr	12 hrs	12 hr	168 hr	12 hr
			or if valve is open:	or:	or:	or:	or:	or:	or:
			System pressure boundary maintained	24 hr	168 hr	24 hr	48 hr	168 hr	48 hr
			System pressure boundary compromised	24 hr	168 hr	24 hr	48 hr	168 hr	48 hr
V-161: GTHZ-6		I,A #15 or I,A #15a if valves are open	System pressure boundary maintained	12 hr	168 hr	12 hr	12 hr	168 hr	12 hr
			System pressure boundary compromised	12 hr	168 hr	12 hr	12 hr	168 hr	12 hr
			or if valve is open:	or:	or:	or:	or:	or:	or:
			System pressure boundary maintained	24 hr	168 hr	24 hr	24 hr	168 hr	24 hr
			System pressure boundary compromised	24 hr	168 hr	24 hr	24 hr	168 hr	24 hr

10.2 RESULTS

The WCGS-specific analysis resulted in additional extended CTs for their CIVs than the generic application. This is related to the conservative nature of the generic analysis that is applicable to all Westinghouse NSSS plants, that used the most limiting values. Table 10-2 displays the comparison of using the plant specific approach of Section 10 to the generic approach performed in the lead plant study of Section 9. It can be seen that out of all of WCGS's containment isolation valves, 74% of them can be justified for the full 168 hour CT under this plant specific analysis, which is a 4% increase from the generic analysis results.

Table 10-2 Cumulative Percentages of CIV Completion Time Extensions Generic Results vs. Plant Specific Results as Applied to the Wolf Creek Generating Station

Completion Time (hours)	Percentage of CIVs Generic Results	Percentage of CIVs Plant Specific Results
8	93%	94%
12	91%	92%
24	88%	88%
48	80%	82%
72	80%	81%
168	70%	74%

11 CONCLUSIONS

Through a risk-informed evaluation of Completion Time extensions for containment isolation valves that is consistent with NRC acceptance criteria, the following conclusions are drawn:

- Through the considerations discussed in Section 8.3, a threshold containment hole size greater than 2 inches was identified as the point a large release could occur. Containment holes sizes less than or equal to 2 inches in diameter will not produce a large release. This is applicable to penetrations from the containment atmosphere to the outside environment. The CTs for CIVs in penetrations less than or equal to 2 inches default to 168 hours.

- Through the probabilistic approach of Section 8.2, generic penetration configurations were evaluated for acceptable CTs. Based on this, the completion times for the generic listing of containment isolation valves should be increased to the values provided in Tables 8-2, 8-3, and 8-4. The completion time extensions account for valves of various types with different methods of maintenance. The ICLERP and ΔLERF for each penetration at the proposed CT extensions meet the acceptance criteria of Regulatory Guides of 1.174 and 1.177.

- The lead plant application of the generic analysis of Section 9 demonstrates a) that the analysis is applicable and beneficial to utilities; 70% of all of WCGS's CIVs were justified to the full 7 day completion time, and b) the process to follow for utility implementation.

- The plant specific analysis of Section 10 illustrates that the generic analysis is conservative and longer CTs can be achieved on a plant-specific basis. Performing the plant specific analysis with WCGS resulted in 74% of their CIVs being justified to the full completion time of 7 days, a 4% increase from the generic application.

12 REFERENCES

1. Regulatory Guide 1.174, "An Approach for Using Probabilistic Risk Assessment in Risk-Informed Decisions on Plant-Specific Changes to the Licensing Basis," July 1998.

2. Regulatory Guide 1.177, "An Approach for Plant-Specific, Risk-Informed Decisionmaking: Technical Specifications," August 1998.

3. "Standard Technical Specifications, Westinghouse Plants," U.S. NRC, NUREG-1431, Vol. 1, Rev. 2.

4. Information obtained from plant specific PRA databases for Westinghouse plants.

5. "Advanced Light Water Reactor Utility Requirements Document," Volume II, ALWR Evolutionary Plant, Chapter 1, Appendix A, PRA Key Assumptions and Groundrules, Rev. 5, issued December 1992.

6. "Westinghouse Owners Group Application of Risk-Informed Methods to Piping Inservice Inspection Topical Report," WCAP-14572, Rev. 1-NP-A.

7. WesSAGE, Version 1.0 for Microsoft Windows.

8. "EPRI PSA Applications Guide," EPRI TR-105396, Project 3200-12, Final Report, August 1995.

APPENDIX A

TSTF-446, [LASTEST REVISION] "RISK-INFORMED EVALUATION OF EXTENSIONS TO CONTAINMENT ISOLATION VALVE COMPLETION TIMES (WCAP-15791, REV. 2)"

TSTF

TECHNICAL SPECIFICATIONS TASK FORCE
A JOINT OWNERS GROUP ACTIVITY

February 19, 2008

TSTF-08-04
PROJ0753

U. S. Nuclear Regulatory Commission
Attn: Document Control Desk
Washington, DC 20555-0001

SUBJECT: TSTF-446, Revision 3, "Risk Informed Evaluation of Extensions to Containment Isolation Valve Completion Times (WCAP-15791)"

Dear Sir or Madam:

Enclosed for NRC review is Revision 3 of TSTF-446, "Risk Informed Evaluation of Extensions to Containment Isolation Valve Completion Times (WCAP-15791)." TSTF-446 is revised to reflect submittal of Revision 2 of the supporting Topical Report (WCAP-15791) and changes requested by the NRC during a teleconference. A description of the changes is found in the section entitled, "TSTF Revision 3, Revision Description."

We request that NRC review of TSTF-446 continue to be granted a fee waiver pursuant to the provisions of 10 CFR 170.11. Specifically, the request is to support NRC generic regulatory improvements (risk management technical specifications), in accordance with 10 CFR 170.11(a)(1)(iii). This request is consistent with the NRC letter to A. R. Pietrangelo on this subject dated January 10, 2003 and the NRC's review of previous revisions of this Traveler.

The TSTF requests that the Traveler be made available under the Consolidated Line Item Improvement Process.

11921 Rockville Pike, Suite 100, Rockville, MD 20852
Phone: 301-984-4400, Fax: 301-984-7600
Email: tstf@excelservices.com
Administered by EXCEL Services Corporation

PWROG PWR Owners Group
BWR OWNERS' GROUP

TSTF 08-04
February 19, 2008
Page 2

Should you have any questions, please do not hesitate to contact us.

Bert Yates (PWROG/W)

John Messina (BWROG)

David Bice (PWROG/CE)

Reene' Gambrell (PWROG/B&W)

Enclosure

cc: Gerald Waig, Technical Specifications Branch, NRC
Matthew Hamm, Technical Specifications Branch, NRC

WOG-167, Rev. 0 TSTF-446, Rev. 3

Technical Specification Task Force
Improved Standard Technical Specifications Change Traveler

Risk Informed Evaluation of Extensions to Containment Isolation Valve Completion Times (WCAP-15791)

NUREGs Affected: ☐ 1430 ☑ 1431 ☐ 1432 ☐ 1433 ☐ 1434

Classification: 1) Technical Change Recommended for CLIIP?: Yes

Correction or Improvement: Improvement NRC Fee Status: Exempt

Benefit: Provides Longer Completion Time

Industry Contact: Bert Yates, (314) 554-3573, gyates@ameren.com

See attached justification.

Revision History

OG Revision 0 Revision Status: Closed

Revision Proposed by: WOG

Revision Description:
Original Issue

Owners Group Review Information

Date Originated by OG: 17-Jul-02

Owners Group Comments
(No Comments)

Owners Group Resolution: Approved Date: 17-Jul-02

TSTF Review Information

TSTF Received Date: 27-Sep-02 Date Distributed for Review 04-Oct-02

OG Review Completed: ☐ BWOG ☑ WOG ☑ CEOG ☐ BWROG

TSTF Comments:
(No Comments)

TSTF Resolution: Approved Date: 18-Oct-02

NRC Review Information

NRC Received Date: 25-Oct-02

Final Resolution: Superceded by Revision

TSTF Revision 1 Revision Status: Closed

19-Feb-08

Traveler Rev. 3. Copyright (C) 2006, EXCEL Services Corporation. Use by EXCEL Services associates, utility clients, and the U.S. Nuclear Regulatory Commission is granted. All other use without written permission is prohibited.

TSTF Revision 1 **Revision Status: Closed**

Revision Proposed by: WOG

Revision Description:
TSTF-446, Rev. 0 is revised to address responses to NRC RAI's on WCAP-15791 as follows.

1. Condition A references to Conditions D and E in Condition A are changed to Conditions E and F.

2. Condition B references to Conditions D and E in Condition B are changed to Conditions E and F.

3. A new Condition D is added for two or more penetration flow paths with one containment isolation valve inoperable.

4. Existing Conditions D, E, and F are revised to Conditions E, F, and G.

5. A new Bases discussion is added for new Required Action D.1. A Reviewer's Note is also added to the new Bases discussion for new Condition D that discusses the WCAP-15791 analysis, and the provision for a plant specific analysis, and associated revision to new Condition D to reflect the plant specific analysis.

6. The Bases for Required Actions D.1, E.1, and F.1 are revised to E.1, F.1, and G.1.

7. Reference 4 in the References of the Bases is revised to WCAP-15791, Rev. 1, May 2004.

In addition, the revised pages were marked on Revision 3 of NUREG-1431. This resulted in no alteration of the proposed changes.

Owners Group Review Information

Date Originated by OG: 11-Mar-04

Owners Group Comments
(No Comments)

Owners Group Resolution: Approved Date: 27-Jul-04

TSTF Review Information

TSTF Received Date: 15-Oct-04 Date Distributed for Review 02-Nov-04

OG Review Completed: ☑ BWOG ☑ WOG ☑ CEOG ☑ BWROG

TSTF Comments:
(No Comments)

TSTF Resolution: Approved Date: 29-Jan-05

NRC Review Information

NRC Received Date: 31-Jan-05

NRC Comments:
On 5/19/07, the NRC stopped review of the Traveler pending submittal by Westinghouse of a revised Topical Report.

Final Resolution: Superceded by Revision

19-Feb-08

Traveler Rev. 3. Copyright (C) 2006, EXCEL Services Corporation. Use by EXCEL Services associates, utility clients, and the U.S. Nuclear Regulatory Commission is granted. All other use without written permission is prohibited.

TSTF Revision 2 Revision Status: Closed

Revision Proposed by: WOG

Revision Description:
Insert 4 and Insert 5 are revised to reflect the correct Table in WCAP-15791, Revision 1. Insert 8 is revised to provide additional clarifying Bases wording for subsequent CIV inoperabilities.

The NRC issued the final Safety Evaluation for WCAP-15791, Revision 1, "Risk-Informed Evaluation of Extension to Containment Isolation Valve Completion Times," on March 10, 2006. The lead plant amendment was issued on September 28, 2006, to Wolf Creek Nuclear Operating Company.

Owners Group Review Information

Date Originated by OG: 02-Jan-06

Owners Group Comments
(No Comments)

Owners Group Resolution: Date:

TSTF Review Information

TSTF Received Date: 10-Jan-07 Date Distributed for Review 10-Jan-07

OG Review Completed: ☑ BWOG ☑ WOG ☑ CEOG ☑ BWROG

TSTF Comments:
(No Comments)

TSTF Resolution: Approved Date: 11-Jan-07

NRC Review Information

NRC Received Date: 11-Jan-07

Final Resolution: Superceded by Revision

TSTF Revision 3 Revision Status: Active

Revision Proposed by: NRC

Revision Description:
TSTF-446 is revised to address NRC comments:

1) The justification is revised to reflect submittal of WCAP-15791, Revision 2, on November 1, 2007.

2) The Tier 1 discussion is revised to clarify that licensees can use plant-specific input parameters and develop plant-specific Completion Times.

3) The discussion of Tier 3 requirements is expanded.

4) A new section on Performance Monitoring is added.

Traveler Rev. 3. Copyright (C) 2006, EXCEL Services Corporation. Use by EXCEL Services associates, utility clients, and the U.S. Nuclear Regulatory Commission is granted. All other use without written permission is prohibited.

TSTF Revision 3 **Revision Status: Active**

The Specifications are unaffected. The References section of the Bases was revised to reference Revision 2 instead of Revision 1 of WCAP-15791.

Owners Group Review Information

Date Originated by OG: 15-Feb-08

Owners Group Comments
(No Comments)

Owners Group Resolution: Approved Date: 19-Feb-08

TSTF Review Information

TSTF Received Date: 15-Feb-08 Date Distributed for Review 29-Feb-08

OG Review Completed: ☑ BWOG ☑ WOG ☑ CEOG ☑ BWROG

TSTF Comments:
(No Comments)

TSTF Resolution: Approved Date: 19-Feb-08

NRC Review Information

NRC Received Date: 19-Feb-08

Affected Technical Specifications

LCO 3.6.3	Containment Isolation Valves (Atmospheric, Subatmospheric, Ice Condenser, and Dual)
Ref. 3.6.3 Bases	Containment Isolation Valves (Atmospheric, Subatmospheric, Ice Condenser, and Dual)
Action 3.6.3.A	Containment Isolation Valves (Atmospheric, Subatmospheric, Ice Condenser, and Dual)
Action 3.6.3.A Bases	Containment Isolation Valves (Atmospheric, Subatmospheric, Ice Condenser, and Dual)
Action 3.6.3.B	Containment Isolation Valves (Atmospheric, Subatmospheric, Ice Condenser, and Dual) Change Description: New
Action 3.6.3.B	Containment Isolation Valves (Atmospheric, Subatmospheric, Ice Condenser, and Dual) Change Description: Renamed C

19-Feb-08

Traveler Rev. 3. Copyright (C) 2006, EXCEL Services Corporation. Use by EXCEL Services associates, utility clients, and the U.S. Nuclear Regulatory Commission is granted. All other use without written permission is prohibited.

	WOG-167, Rev. 0	TSTF-446, Rev. 3
Action 3.6.3.B Bases	Containment Isolation Valves (Atmospheric, Subatmospheric, Ice Condenser, and Dual) **Change Description: New**	
Action 3.6.3.B Bases	Containment Isolation Valves (Atmospheric, Subatmospheric, Ice Condenser, and Dual) **Change Description: Renamed C**	
Action 3.6.3.C	Containment Isolation Valves (Atmospheric, Subatmospheric, Ice Condenser, and Dual) **Change Description: Deleted**	
Action 3.6.3.C Bases	Containment Isolation Valves (Atmospheric, Subatmospheric, Ice Condenser, and Dual) **Change Description: Deleted**	
Action 3.6.3.D	Containment Isolation Valves (Atmospheric, Subatmospheric, Ice Condenser, and Dual) **Change Description: Renamed E**	
Action 3.6.3.D	Containment Isolation Valves (Atmospheric, Subatmospheric, Ice Condenser, and Dual) **Change Description: New Action**	
Action 3.6.3.D Bases	Containment Isolation Valves (Atmospheric, Subatmospheric, Ice Condenser, and Dual) **Change Description: Renamed E**	
Action 3.6.3.D Bases	Containment Isolation Valves (Atmospheric, Subatmospheric, Ice Condenser, and Dual) **Change Description: New Action**	
Action 3.6.3.E	Containment Isolation Valves (Atmospheric, Subatmospheric, Ice Condenser, and Dual) **Change Description: Renamed F**	
Action 3.6.3.E Bases	Containment Isolation Valves (Atmospheric, Subatmospheric, Ice Condenser, and Dual) **Change Description: Renamed F**	
Action 3.6.3.E Bases	Containment Isolation Valves (Atmospheric, Subatmospheric, Ice Condenser, and Dual) **Change Description: Deleted**	
Action 3.6.3.F	Containment Isolation Valves (Atmospheric, Subatmospheric, Ice Condenser, and Dual) **Change Description: Renamed G**	
Action 3.6.3.F Bases	Containment Isolation Valves (Atmospheric, Subatmospheric, Ice Condenser, and Dual) **Change Description: Renamed G**	
SR 3.6.3.1 Bases	Containment Isolation Valves (Atmospheric, Subatmospheric, Ice Condenser, and Dual)	
SR 3.6.3.7 Bases	Containment Isolation Valves (Atmospheric, Subatmospheric, Ice Condenser, and Dual)	

19-Feb-08

Traveler Rev. 3. Copyright (C) 2006, EXCEL Services Corporation. Use by EXCEL Services associates, utility clients, and the U.S. Nuclear Regulatory Commission is granted. All other use without written permission is prohibited.

1.0 DESCRIPTION

WCAP-15791, Rev. 1 provides the technical justification for extending the Completion Time, also referred to as the allowed outage time (AOT), from 4 hours to 168 hours (7 days) (for isolation valves that cannot demonstrate acceptable results for 168 hours, shorter times are considered and evaluated), for Technical Specification (TS) 3.6.3, "Containment Isolation Valves (Atmospheric, Subatmospheric, Ice Condenser, and Dual)." The current Completion Times are generally insufficient to respond to containment isolation valve inoperability and perform preventative maintenance activities at power.

The TS Bases for TS 3.6.3 are modified for consistency with the changes to the Technical Specifications.

Letter OG-02-022, dated June, 6, 2002, transmitted WCAP-15791-P, Rev. 0 (Proprietary) and WCAP-15791-NP, Rev. 0 (Non-Proprietary), both entitled "Risk-Informed Evaluation of Extensions to Containment Isolation Valve Completion Times," to the NRC for review and approval.

Letter WOG-04-234, dated May 6, 2004, transmitted WCAP-15791-P, Rev. 1 (Proprietary) and WCAP-15971-NP, Rev. 1 (Non-Proprietary), both entitled "Risk-Informed Evaluation of Extensions to Containment Isolation Valve Completion Times," to the NRC. WCAP-15791, Rev. 0 was revised in response to an NRC Request for Additional Information.

The NRC issued a revised final Safety Evaluation for WCAP-15791, Revision 2 on November 1, 2007. The lead plant amendment was issued on September 28, 2006, to Wolf Creek Nuclear Operating Company. The final, "-A" version of the Topical Report has not yet been issued. The date of the final version will be added to the References section of the Bases for Specification 3.6.3 during incorporation of this Traveler into the ISTS NUREGs.

2.0 PROPOSED CHANGE

WCAP-15791, Rev. 2 provides the justification for the following changes to TS 3.6.3, "Containment Isolation Valves (Atmospheric, Subatmospheric, Ice Condenser, and Dual)," of NUREG-1431, Westinghouse Standard Technical Specifications:

- Condition A is revised to delete the NOTE, and to be applicable when the containment isolation valve pressure boundary is intact.
- The Completion Time for Required Action A.1 is revised to allow a Completion Time from 4 hours up to a Completion Time of 7 days with the containment isolation valve pressure boundary intact.
- A new Condition B is added for one or more penetration flow paths with one containment isolation valve inoperable and the containment isolation valve pressure boundary not intact. Existing Condition B is revised to Condition C.
- Existing Condition C for penetration flow paths with only one containment isolation valve and a closed system is deleted.
- A new Condition D is added for two or more penetration flow paths with one containment

isolation valve inoperable. Existing Conditions D, E, and F are revised to Conditions E, F, and G.

3.0 BACKGROUND

The containment isolation valves are used to isolate containment penetration flow paths. Typically, there is one containment isolation valve inside and one containment isolation valve outside each penetration that performs this function. Depending on the purpose of the system, the containment isolation valves may be normally open or closed. Systems can be closed or open inside and outside of containment. An open system inside containment is one that is directly connected to the containment atmosphere. An open system outside containment is one that is directly connected to the outside environment. A closed system inside containment is one that is not directly connected to the containment atmosphere and may consist of only a run of pipe inside containment. A closed system outside containment has no direct connection to the outside environment. Closed systems, either inside or outside containment, may not have an associated containment isolation valve.

The containment isolation valves form part of the containment pressure boundary and provide a means for fluid penetrations not serving accident consequence limiting systems to be provided with two isolation barriers that are closed on a containment isolation signal. The isolation devices are either passive or active (automatic). Manual valves, de-activated automatic valves secured in their closed position (including check valves with flow through the valve secured), blind flanges, and closed systems are considered passive devices. Check valves, or other automatic valves designed to close without operator action following an accident, are considered active devices. Two barriers in series are provided for each penetration so that no single credible failure or malfunction of an active component can result in a loss of isolation or leakage that exceeds limits assumed in the safety analyses. One of these barriers may be a closed system. These barriers (typically containment isolation valves) make up the Containment Isolation System.

Automatic isolation signals are produced during accident conditions. Containment Phase "A" isolation occurs upon receipt of a safety injection signal. The Phase "A" isolation signal isolates nonessential process lines in order to minimize leakage of fission product radioactivity. Containment Phase "B" isolation occurs upon receipt of a containment pressure high signal and isolates the remaining process lines, except systems required for accident mitigation. In addition to the isolation signals listed above, the purge and exhaust valves receive an isolation signal on a containment high radiation condition. As a result, the containment isolation valves (and blind flanges) help ensure that the containment atmosphere will be isolated from the environment in the event of a release of fission product radioactivity to the containment atmosphere as a result of a Design Basis Accident (DBA).

The OPERABILITY requirements for containment isolation valves help ensure that containment is isolated within the time limits assumed in the safety analysis. Therefore, the OPERABILITY requirements provide assurance that the containment function assumed in the safety analysis will be maintained.

The containment isolation valve Limiting Condition for Operation (LCO) was derived from the assumptions related to minimizing the loss of reactor coolant inventory and establishing the containment boundary during major accidents. As part of the containment boundary, containment isolation valve OPERABILITY supports leak tightness of the containment.

Therefore, the safety analysis of any event requiring isolation of containment is applicable to this LCO.

The DBAs that result in a release of radioactive material within containment are a loss of coolant accident and a rod ejection accident. In the analysis for each of these accidents, it is assumed that containment isolation valves are either closed or function to close within the required isolation time following event initiation. This ensures that potential paths to the environment through containment isolation valves are minimized.

As discussed in Regulatory Guide 1.177, "An Approach for Plant-Specific, Risk-Informed Decision-Making: Technical Specifications," acceptable reasons for requesting Technical Specification changes fall into one or more of the following categories:

- Improvement to operational safety: A change to the TSs can be made due to reductions in the plant risk or a reduction in the occupational exposure of plant personnel in complying with the TS requirements.

- Consistency with risk basis in regulatory requirements: TS requirements can be changed to reflect improved design features in a plant or to reflect equipment reliability improvements that make a previous requirement unnecessarily stringent or ineffective. TSs may be changed to establish consistently based requirements across the industry or across an industry group.

- Reduce unnecessary burdens: The change may be requested to reduce unnecessary burdens in complying with current TS requirements, based on operating history of the plant or the industry in general. This includes extending Completion Times 1) that are too short to complete repairs when components fail with the plant at-power, 2) to complete additional maintenance activities at-power to reduce plant down time, and 3) to provide increased flexibility to plant operators.

The Completion Time extensions in WCAP-15791, Rev. 2 are requested primarily to provide an improvement to operational safety, reduce unnecessary burden and provide a more consistent risk basis in regulatory requirements. In addition, the assumption that shutting the plant down is the safest course of action is not always valid and depending on the component or system of interest, it may be safer to complete component repairs at power. During shutdown, the transfer from auxiliary feedwater (AFW) to the residual heat removal (RHR) system represents an increased risk level due to system alignment changes that could lead to loss of inventory events. This transition can be avoided by completing the repair at-power. Potential risks associated with plant shutdown need to be considered when determining an appropriate course of action. Extended Completion Times enable this shutdown risk to be averted.

With regard to the regulatory basis consistency, containment isolation valves are typically not as risk significant as many other plant safety systems and components. Often these other systems more important to risk have Completion Times that are longer than the Completion Times for containment isolation valves. Shorter Completion Times should be imposed on systems or components that are considered to be of higher risk significance. Containment penetrations do not rely on single valves to perform their isolation function, but are designed with multiple isolation valves or involve a closed system. A 4 hour Completion Time is too restrictive and potentially forces plant operators to focus on containment isolation valve inoperability ahead of other inoperabilities that may be more risk significant, but have longer Completion Times.

4.0 TECHNICAL ANALYSIS

4.1 Impact on Defense-in-Depth and Safety Margins

In addition to discussing the impact of the changes on plant risk, the traditional engineering considerations need to be addressed. These include defense-in-depth and safety margins. The fundamental safety principles on which the plant design is based cannot be compromised. Design basis accidents are used to develop the plant design. These are a combination of postulated challenges and failure events that are used in the plant design to demonstrate safe plant response. Defense-in-depth, the single failure criterion, and adequate safety margins may be impacted by the proposed change and consideration needs to be given to these elements.

Impact on Defense-in Depth

The proposed change needs to meet the defense-in-depth principle which consists of a number of elements. These elements and the impact of the proposed change on each follow:

- A reasonable balance among prevention of core damage, prevention of containment failure, and consequence mitigation is preserved.

  The containment isolation valves are part of the plant design to primarily ensure containment integrity following an accident. By closing the containment isolation valves, inventory required to cool the core is also maintained. The containment isolation valves are not included in the plant design for consequence mitigation. Therefore, the proposed Completion Time change for the containment isolation valves has a negligible impact on Core Damage Frequency (CDF), no direct impact on consequence mitigation, and only a small impact on Large Early Release Frequency (LERF). This change does not significantly degrade the ability of one barrier to fission product release and compensates with an improvement of another barrier. The balance between prevention of core damage and prevention of containment failure and consequence mitigation is maintained. Furthermore, no new accidents or transients are introduced with the requested change and the likelihood of an accident or transient is not impacted.

- Over-reliance on programmatic activities to compensate for weaknesses in plant design.

  The plant design will not be modified with this proposed change. All safety systems, including the containment isolation valves, will still function in the same manner with the same reliability, and there will be no additional reliance on additional systems, procedures, or operator actions. The calculated risk increase for the Completion Time changes is very small and additional control processes are not required to be put into place to compensate for any risk increase.

- System redundancy, independence, and diversity are maintained commensurate with the expected frequency and consequences of challenges to the system.

  There is no impact on the redundancy, independence, or diversity of the containment isolation valves or on the ability of the plant to isolate containment penetrations with diverse systems. The redundant and diverse containment isolation designs will not be changed.

The containment isolation valves are reliable components and will remain reliable after these proposed changes.

- Defenses against potential common cause failures are maintained and the potential for introduction of new common cause failure mechanisms is assessed.

  Defenses against common cause failures are maintained. The completion time extensions requested are not significantly increased such that any new common cause failure mechanisms would occur. In addition, the operating environment for these components remains the same, therefore, new common cause failures modes are not expected. The number, design, and types of valves used for containment isolation remain the same with these changes so the containment isolation system maintains the potential against common cause failures.

- Independence of barriers is not degraded.

  The barriers protecting the public and the independence of these barriers are maintained. It is not expected that multiple systems will be out of service simultaneously during the extended Completion Times that could lead to degradation of these barriers, and an increase in risk to the public. In addition, the extended Completion Times do not provide a mechanism that degrades the independence of the barriers; fuel cladding, Reactor Coolant System, and containment.

- Defenses against human errors are maintained.

  No new operator actions related to the Completion Time extensions are required to maintain plant safety. No changes to current operating, maintenance, or test procedures are required due to these changes. The increase in Completion Times provides additional time to complete troubleshooting, and test and repair activities which will lead to improved operator and maintenance personnel performance, resulting in reduced system re-alignment and restoration errors.

Impact on Safety Margins

The safety analysis acceptance criteria as stated in the FSAR are not impacted by this change. Redundant and diverse containment isolation valves, where applicable, and closed systems, will be maintained. The proposed changes will not allow plant operation in a configuration outside the design basis. Isolation of all containment penetrations will remain single failure proof. Containment isolation valve operation and testing requirements and containment leakage requirements are not impacted by this change. There is no impact on safety margins.

4.2 Generic Assessment of Impact on Risk

This section presents the analysis and assumptions used to determine the impact on plant risk of increasing the Completion Times specified in Section 2.0. This section addresses the three tiered approach to the evaluation of risk-informed TS changes. The three tiered approach is defined in Regulatory Guide 1.177. The first tier addresses Probabilistic Risk Assessment (PRA) insights and includes the risk analyses to support the Completion Time change. The second tier addresses avoidance of risk-significant plant configurations. The third tier, which

addresses risk-informed plant configuration control and management, is covered by each utility's Maintenance Rule Program.

Tier 1: Approach to the Evaluation

The Tier 1 analysis provides the impact of the Completion Time changes on the incremental conditional large early release probability (ICLERP) and LERF. Since the containment isolation valves are used to maintain containment integrity, any change to their availability will directly impact releases from containment following a core damage event. The impact of these changes on CDF, and as measured by the change in CDF and incremental conditional core damage probability (ICCDP) values, is not important since this impact would be a secondary effect related to a long-term loss of inventory for core cooling or are associated with releases from containment bypass sequences. With regard to containment bypass sequences, the LERF guidelines are more limiting than the CDF guidelines, therefore, if the LERF guidelines are met for containment bypass sequences, then the CDF guidelines are also met.

The approach used in this program applies both deterministic and probabilistic evaluations. A deterministic approach is used to determine the containment hole size that could result in a large release. Based on previous industry analyses, a containment hole size of 2 inches or less will not result in a large release from the containment atmosphere. The 2 inch containment hole size is applicable to large dry, subatmospheric, and ice condenser containment types. Therefore, penetration flow paths connected to the containment atmosphere less than or equal to 2 inches are allowed a Completion Time of 7 days. All other penetrations are evaluated on a probabilistic basis to demonstrate if a Completion Time of 7 days is acceptable or to determine an appropriate lesser Completion Time. The probabilistic evaluation is consistent with the Nuclear Regulatory Commission's (NRC's) approach for using PRA in RI decisions on plant-specific changes to the current licensing basis. This approach is discussed in Regulatory Guide 1.174, "An Approach for Using Probabilistic Risk Assessment in Risk-Informed Decisions on Plant-Specific Changes to the Licensing Basis," and Regulatory Guide 1.177.

The probabilistic analyses was completed on a generic basis. Input parameters used in the analyses were chosen based on the most conservative plant parameters available, that is, the set of parameters that results in the most conservative results (shortest Completion Time). Application of the generic analysis on a plant specific basis requires each utility implementing this change to demonstrate that their plant is within the bounds of the analysis. As an alternative, licensees can use plant specific input parameters, re-quantify the Completion Time calculations, and develop plant specific Completion Times.

The following types of containment penetration flow paths are evaluated:

- Penetration flow paths connected to the containment atmosphere
- Penetration flow paths connected to the Reactor Coolant System
- Penetration flow paths connected to the Steam Generators

Probabilistic Evaluation of the Containment Penetrations

The probabilistic evaluation involves the calculation of the ICLERP and ΔLERF for each type of containment isolation valve penetration. Through finding acceptable ICLERP and ΔLERF values per Regulatory Guides 1.177 and 1.174 (less than 5.0E-08 and 1.0E-07, respectively),

the maximum Completion Times were determined. For those penetrations that could not be justified to the target 7 day Completion Time, shorter Completion Times were evaluated at 72, 48, 24, 12, and 8 hours.

The ICLERP is defined in Regulatory Guide 1.177 as:

> ICLERP = [(conditional LERF with the subject equipment out of service) – (baseline LERF with nominal expected equipment unavailabilities)] x duration of a single CT under consideration

The ICLERP was found for each penetration with the assumption that one containment isolation valve within the penetration is in maintenance. If there was more than one containment isolation valve within the penetration, the calculation was performed as many times as there are valves because any one of those valves could be in maintenance.

For the ΔLERF calculations, a fault tree analysis was performed to evaluate all combinations of non-isolated penetration possibilities for each penetration. Non-isolations can be a result of valve failure as well as a valve being in maintenance. This was done for the current 4 hour Completion Time and the proposed 168 hour Completion Time or lesser times as necessary to meet the 1.0E-07/yr ΔLERF criterion. The increase in the probability of failing to isolate the penetration was then multiplied by the CDF to find the final ΔLERF.

The specific calculations for the ICLERPs and ΔLERFs for the containment isolation valves vary from penetration to penetration. The variations are dependent upon the conditions and configurations of the penetration.

For generic applicability, a large variety of possible containment penetration flow paths were identified, including connections to containment atmosphere, the Reactor Coolant System and the Steam Generators. Different valve types (solenoid-operated valves, motor-operated valves, air-operated valves, check valves, and safety relief valves) and valve positioning (normally open or normally closed) were taken into account for each penetration type. The common cause failure of valves within a flow path being of the same valve type and performing a similar function was also included. In addition, unavailability due to maintenance of the containment isolation valves was included in the analysis.

<u>Deterministic Evaluation used for Containment Hole Sizes Less than or Equal to 2 Inches</u>

A containment hole size less than or equal to 2 inches will not result in a large release. Penetration flow paths connected to the containment atmosphere (this excludes all Reactor Coolant System and Steam Generator connections) that have piping diameters less than or equal to this 2 inch threshold value are not large enough to result in a large release. This is consistent with previous industry analyses that use a 2 inch containment hole size for screening in the development of containment isolation PRA models, and was agreed to by the NRC as discussed in the response to RAI 2.c as discussed in letter WOG-04-077, dated February 13, 2004. These penetrations automatically default to the 7 day Completion Time and no detailed probabilistic analysis is required.

Tier 2: Avoidance of Risk-Significant Plant Conditions

The objective of the second tier, which is applicable to Completion Time extensions, is to provide reasonable assurance that risk-significant plant equipment outage configurations will not occur when equipment is out of service. If risk-significant configurations do occur, then enhancements to Technical Specifications or procedures, such as limiting unavailability of backup systems, increased surveillance frequencies, or upgrading procedures or training, can be made that avoid, limit, or lessen the importance of these configurations.

The containment isolation valves form part of the containment barrier limiting releases to the environment. Other containment systems, such as the containment cooling system and containment spray system, also function to mitigate releases to the environment, but by different mechanisms. These other systems typically are used to preserve containment integrity by limiting containment pressure increase or to remove radioactive material from the containment atmosphere. The containment cooling and containment spray systems are generally not considered backup to the containment isolation function. Given that containment isolation has failed, releases from containment are independent of the success or failure of containment cooling. The containment is already breached and containment pressure limitation is no longer an issue. On the other hand, if containment isolation has failed, then containment sprays could be a factor in limiting releases via their scrubbing effect. This would be of limited benefit, because a large portion of the core damage sequences in which containment spray was functional at the time of the initiating event do not have effective scrubbing by sprays at the time of fission product release to the containment. Thus, efforts taken to assure the availability of containment spray when containment isolation may be impaired, do little to assure that containment spray will be effective in reducing releases if a core damage accident occurs. Also, when analyzed on a realistic basis, only a small fraction of the core damage sequences with containment isolation failures would result in fission product releases that are risk significant. Therefore, no Tier 2 limitations need to be imposed.

Tier 3: Risk-Informed Plant Configuration Control and Management

The objective of the third-tier is to ensure that the risk impact of out-of-service equipment is evaluated prior to performing any maintenance activity. As stated in RG-1.174, "a viable program would be one that is able to uncover risk-significant plant equipment outage configurations as they evolve during real-time, normal plant operation." The third-tier requirement is an extension of the second-tier requirement, but addresses the limitation of not being able to identify all possible risk-significant plant configurations in the second-tier evaluation.

Tier 3 requirements will be addressed by each licensee's Maintenance Rule Program (10 CFR 50.65(a)(4)). Plant specific Maintenance Rule evaluations will consider the CIVs with diameters greater than 2 inches. This can be done in one of the following two ways:

- Model each CIV greater than 2 inches in diameter and the associated containment penetration in the PRA model used for the Maintenance Rule evaluations.
- Model a representative number of CIVs greater than 2 inches in diameter and associated containment penetrations in the PRA model used for the Maintenance Rule evaluations. The representative modeled CIVs can be used as surrogates for the CIVs not explicitly modeled.

4.3 Performance Monitoring

Element 3 (Define Implementation and Monitoring Program) of the risk-informed process defined in Regulatory Guide 1.174 addresses performance monitoring. The primary goal of performance monitoring is to ensure that no adverse safety degradation occurs because of the proposed changes. The performance monitoring program should ensure that the engineering evaluation remains applicable. The key analysis parameters in the extension of the CIV Completion Times is the unavailability of the CIVs. Therefore, the program can monitor the unavailability of the CIVs to ensure they remain within the analysis assumptions. One method to do this is by CIV Category with the Category defined by a common Completion Time. Each CIV greater than 2 inches in diameter can be assigned to Categories 2 through 7. It is not necessary to monitor Category 1, since this Category is the original 4 hour CIV Completion Time. It is also not necessary to monitor CIVs less than or equal 2 inches in diameter, since they cannot provide a large release. The average unavailability for each Category can be compared to the analysis assumptions to demonstrate consistency.

5.0 REGULATORY ANALYSIS

5.1 No Significant Hazards Consideration

The proposed changes to the Improved Standard Technical Specifications (ISTS) will revise Technical Specifications 3.6.3 to extend selected Completion Times.

In accordance with the criteria set forth in 10 CFR 50.92, the proposed changes to NUREG-1431 have been evaluated and it has been determined that they do not represent a significant hazards consideration. The following is provided in support of this conclusion:

1. Does the proposed change involve a significant increase in the probability or consequences of an accident previously evaluated.

Response: No

The proposed changes to the Completion Times do not change the response of the plant to any accidents and have no impact on the reliability of the containment isolation valves, and an insignificant impact on the availability of the containment isolation valves. The containment isolation valves will remain highly reliable and the proposed changes will not result in a significant increase in the risk of plant operation. This is demonstrated by showing that the impact on plant safety as measured by core damage frequency (CDF) and large early release frequency (LERF) is acceptable. In addition, for the Completion Time change, the incremental conditional core damage probabilities (ICCDP) and incremental conditional large early release probabilities (ICLERP) are also acceptable. These changes are consistent with the acceptance criteria in Regulatory Guides 1.174 and 1.177. Therefore, since the containment isolation valves will continue to perform their functions with high reliability as originally assumed, and the increase in risk as measured by CDF, LERF, ICCDP, ICLERP is acceptable, there will not be a significant increase in the consequences of any accidents.

The proposed changes do not adversely affect accident initiators or precursors nor alter the design assumptions, conditions, or configuration of the facility or the manner in which the plant

is operated and maintained. The proposed changes do not alter or prevent the ability of structures, systems, and components (SSCs) from performing their intended function to mitigate the consequences of an initiating event within the assumed acceptance limits. The proposed changes do not affect the source term, containment isolation, or radiological release assumptions used in evaluating the radiological consequences of an accident previously evaluated. Further, the proposed changes do not increase the types or amounts of radioactive effluent that may be released offsite, nor significantly increase individual or cumulative occupational/public radiation exposures. The proposed changes are consistent with the safety analysis assumptions and resultant consequences.

Therefore, it is concluded that this change does not significantly increase the probability of an accident previously evaluated.

2. Does the proposed change create the possibility of a new or different kind of accident from any accident previously evaluated.

Response: No

The proposed changes do not result in a change in the manner in which the containment isolation valves provide plant protection. There are no design changes associated with the proposed changes. The changes to Completion Times do not change any existing accident scenarios, nor create any new or different accident scenarios.

The changes do not involve a physical alteration of the plant (i.e., no new or different type of equipment will be installed) or a change in the methods governing normal plant operation. In addition, the changes do not impose any new or different requirements or eliminate any existing requirements. The changes do not alter assumptions made in the safety analysis. The proposed changes are consistent with the safety analysis assumptions and current plant operating practice.

Therefore, the possibility of a new or different kind of accident from any accident previously evaluated is not created.

3. Does the proposed change involve a significant reduction in a margin of safety?

Response: No

The proposed changes do not alter the manner in which safety limits, limiting safety system settings or limiting conditions for operation are determined. The safety analysis acceptance criteria are not impacted by these changes. The proposed changes will not result in plant operation in a configuration outside the design basis. The calculated impact on risk is insignificant and is consistent with the acceptance criteria contained in Regulatory Guides 1.174 and 1.177.

Therefore, it is concluded that this change does not involve a significant reduction in a margin of safety.

5.2 Applicable Regulatory Requirements/Criteria

General Design Criteria 54 – Piping Systems Penetrating Containment

Piping Systems penetrating the primary reactor containment shall be provided with leak detection, isolation, and containment capabilities having redundancy, reliability, and performance capabilities which reflect the importance to safety of isolating these piping systems. Such piping systems shall be designed with a capability to test periodically the operability of the isolation valves and associated apparatus and to determine if valve leakage is within acceptable limits.

General Design Criteria 55 – Reactor Coolant Pressure Boundary Penetrating Containment

Each line that is part of the reactor coolant pressure boundary and that penetrates primary reactor containment shall be provided with containment isolation valves as follows, unless it can be demonstrated that the containment isolation provisions for a specific class of lines, such as instrument lines, are acceptable on some other defined basis:

(1) One locked closed isolation valve inside and one locked closed isolation valve outside containment; or
(2) One automatic isolation valve inside and one locked closed isolation valve outside containment; or
(3) One locked closed isolation valve inside and one automatic isolation valve outside containment. A simple check valve may not be used as the automatic isolation valve outside containment; or
(4) One automatic isolation valve inside and one automatic isolation valve outside containment. A simple check valve may not be used as the automatic isolation valve outside containment.

Isolation valves outside containment shall be located as close to containment as practical and upon loss of actuating power, automatic isolation valves shall be designed to take the position that provides greater safety.

Other appropriate requirements to minimize the probability or consequences of an accidental rupture of those lines or of lines connected to them shall be provided as necessary to assure adequate safety. Determination of the appropriateness of these requirements, such as higher quality in design, fabrication and testing, additional provisions for inservice inspection, protection against more severe natural phenomena, and additional isolation valves and containment, shall include consideration of the population density, use characteristics, and physical characteristics of the site environs.

General Design Criteria 56 – Primary Containment Isolation

Each line that connects directly to the containment atmosphere and penetrates primary reactor containment shall be provided with containment isolation valves as follows, unless it can be demonstrated that the containment isolation provisions for a specific class of lines, such as instrument lines, are acceptable on some other defined basis:

(1) One locked closed isolation valve inside and one locked closed isolation valve outside containment; or
(2) One automatic isolation valve inside and one locked closed isolation valve outside containment; or

(3) One locked closed isolation valve inside and one automatic isolation valve outside containment. A simple check valve may not be used as the automatic isolation valve outside containment; or

(4) One automatic isolation valve inside and one automatic isolation valve outside containment. A simple check valve may not be used as the automatic isolation valve outside containment.

Isolation valves outside containment shall be located as close to the containment as practical and upon loss of actuating power, automatic isolation valves shall be designed to take the position that provides greater safety.

General Design Criteria 57 – Closed System Isolation Valves

Each line that penetrates the primary reactor containment and is neither part of the reactor coolant pressure boundary nor connected directly to the containment atmosphere shall have at least one containment isolation valve which shall be either automatic, or locked closed, or capable of remote manual operation. This valve shall be outside containment and located as close to the containment as practical. A simple check valve may not be used as the automatic isolation valve.

In conclusion, based on the considerations discussed above, (1) there is reasonable assurance that the health and safety of the public will not be endangered by operation in the proposed manner, (2) such activities will be conducted in compliance with the Commission's regulations, and (3) the approval of the proposed change will not be inimical to the common defense and security or to the health and safety of the public.

6.0 ENVIRONMENTAL CONSIDERATIONS

A review has determined that the proposed change would change a requirement with respect to installation or use of a facility component located within the restricted area as defined in 10 CFR 20, or would change an inspection or surveillance requirement. However, the proposed change does not involve (i) a significant hazards consideration, (ii) a significant change in the types or significant increase in the amounts of any effluents that may be released offsite, or (iii) a significant increase in individual or cumulative occupational radiation exposure. Accordingly, the proposed amendment meets the eligibility criterion for categorical exclusion set forth in 10 CFR 51.22(c)(9). Therefore, pursuant to 10 CFR 51.22(b), no environmental impact statement or environmental assessment need be prepared in connection with the proposed amendment.

7.0 REFERENCES

1. WCAP-15791-P-A, Rev. 2 (Proprietary) and WCAP-15791-NP-A, Rev. 1 (Non-Proprietary), both entitled "Risk-Informed Evaluation of Extensions to Containment Isolation Valve Completion Times."

3.6 CONTAINMENT SYSTEMS

3.6.3 Containment Isolation Valves (Atmospheric, Subatmospheric, Ice Condenser, and Dual)

LCO 3.6.3 Each containment isolation valve (CIV) shall be OPERABLE.

APPLICABILITY: MODES 1, 2, 3, and 4.

ACTIONS

----------NOTES----------

1. Penetration flow path(s) [except for [42] inch purge valve flow paths] may be unisolated intermittently under administrative controls.

2. Separate Condition entry is allowed for each penetration flow path.

3. Enter applicable Conditions and Required Actions for systems made inoperable by containment isolation valves.

4. Enter applicable Conditions and Required Actions of LCO 3.6.1, "Containment," when isolation valve leakage results in exceeding the overall containment leakage rate acceptance criteria.

CONDITION	REQUIRED ACTION	COMPLETION TIME
A. ~~NOTE Only applicable to penetration flow paths with two [or more] containment isolation valves.~~ [One or more penetration flow paths with one containment isolation valve inoperable [for reasons other than Condition[s] ~~D~~ E [and ~~E~~F]]. AND Containment isolation	A.1 Isolate the affected penetration flow path by use of at least one closed and de-activated automatic valve, closed manual valve, blind flange, or check valve with flow through the valve secured. AND	4 hours for Category 1 CIVs AND 8 hours for Category 2 CIVs AND 12 hours for Category 3 CIVs AND 24 hours for Category 4 CIVs AND

CONDITION	REQUIRED ACTION	COMPLETION TIME
valve pressure boundary intact.]		48 hours for Category 5 CIVs AND 72 hours for Category 6 CIVs AND 7 days for Category 7 CIVs~~4 hours~~

ACTIONS (continued)

CONDITION	REQUIRED ACTION	COMPLETION TIME
	A.2 ----------NOTES---------- 1. Isolation devices in high radiation areas may be verified by use of administrative means. 2. Isolation devices that are locked, sealed, or otherwise secured may be verified by use of administrative means. ---------- Verify the affected penetration flow path is isolated.	Once per 31 days for isolation devices outside containment AND Prior to entering MODE 4 from MODE 5 if not performed within the previous 92 days for isolation devices inside containment]

ACTIONS (continued)

CONDITION	REQUIRED ACTION	COMPLETION TIME
B. [One or more penetration flow paths with one containment isolation valve inoperable [for reasons other than Condition[s] E [and F]]. AND Containment isolation valve pressure boundary not intact.	B.1 Isolate the affected penetration flow path by use of at least one closed and de-activated automatic valve, closed manual valve, blind flange, or check valve with flow through the valve secured. AND	4 hours for Category 8 CIVs AND 8 hours for Category 9 CIVs AND 12 hours for Category 10 CIVs AND 24 hours for Category 11 CIVs AND 48 hours for Category 12 CIVs AND 72 hours for Category 13 CIVs AND 7 days for Category 14 CIVs

ACTIONS (continued)

CONDITION	REQUIRED ACTION	COMPLETION TIME
B. (continued)	B.2 ---------- NOTES --------- 1. Isolation devices in high radiation areas may be verified by use of administrative means. 2. Isolation devices that are locked, sealed, or otherwise secured may be verified by administrative means. ---------- Verify the affected penetration flow path is isolated.	Once per 31 days for isolation devices outside containment AND Prior to entering MODE 4 from MODE 5 if not performed within the previous 92 days for isolation devices inside containment]

ACTIONS (continued)

CONDITION	REQUIRED ACTION	COMPLETION TIME
~~B~~C. ----------NOTE---------- Only applicable to penetration flow paths with two [or more] containment isolation valves. ---------- One or more penetration flow paths with two [or more] containment isolation valves inoperable [for reasons other than Condition[s] ~~D~~ E [and ~~E~~F]].	~~B~~C.1 Isolate the affected penetration flow path by use of at least one closed and de-activated automatic valve, closed manual valve, or blind flange.	1 hour
~~C. ----------NOTE---------- Only applicable to penetration flow paths with only one containment isolation valve and a closed system. ----------~~ ~~One or more penetration flow paths with one containment isolation valve inoperable.~~	~~C.1 Isolate the affected penetration flow path by use of at least one closed and de-activated automatic valve, closed manual valve, or blind flange.~~ ~~AND~~	~~72 hours~~

ACTIONS (continued)

CONDITION	REQUIRED ACTION	COMPLETION TIME
	~~C.2 NOTES~~ ~~1. Isolation devices in high radiation areas may be verified by use of administrative means.~~ ~~2. Isolation devices that are locked, sealed, or otherwise secured may be verified by use of administrative means.~~ ~~Verify the affected penetration flow path is isolated.~~	~~Once per 31 days~~
D. Two or more penetration flow paths with one containment isolation valve inoperable [for reasons other than Condition[s] E [and F]].	D.1 Isolate all but one penetration flow path by use of at least one closed and de-activated automatic valve, closed manual valve, or blind flange.	4 hours
~~D~~E. [One or more shield building bypass leakage [or purge valve leakage] not within limit.	~~D~~E.1 Restore leakage within limit.	4 hours for shield building bypass leakage AND 24 hours for purge valve leakage]
~~E~~F. [One or more penetration flow paths with one or more containment purge valves not within purge valve leakage limits.	~~E~~F.1 Isolate the affected penetration flow path by use of at least one [closed and de-activated automatic valve, closed manual valve, or blind flange]. AND	24 hours

ACTIONS (continued)

CONDITION	REQUIRED ACTION		COMPLETION TIME
	~~E~~F.2	----------NOTES---------- 1. Isolation devices in high radiation areas may be verified by use of administrative means. 2. Isolation devices that are locked, sealed, or otherwise secured may be verified by use of administrative means. ----------	
		Verify the affected penetration flow path is isolated.	Once per 31 days for isolation devices outside containment AND Prior to entering MODE 4 from MODE 5 if not performed within the previous 92 days for isolation devices inside containment
	AND		
	~~E~~F.3	Perform SR 3.6.3.7 for the resilient seal purge valves closed to comply with Required Action ~~E~~F.1.	Once per [92] days]
~~F~~G. Required Action and associated Completion Time not met.	~~F~~G.1	Be in MODE 3.	6 hours
	AND		
	~~F~~G.2	Be in MODE 5.	36 hours

BASES

ACTIONS (continued)

A second Note has been added to provide clarification that, for this LCO, separate Condition entry is allowed for each penetration flow path. This is acceptable, since the Required Actions for each Condition provide appropriate compensatory actions for each inoperable containment isolation valve. Complying with the Required Actions may allow for continued operation, and subsequent inoperable containment isolation valves are governed by subsequent Condition entry and application of associated Required Actions.

The ACTIONS are further modified by a third Note, which ensures appropriate remedial actions are taken, if necessary, if the affected systems are rendered inoperable by an inoperable containment isolation valve.

In the event the isolation valve leakage results in exceeding the overall containment leakage rate, Note 4 directs entry into the applicable Conditions and Required Actions of LCO 3.6.1.

----------REVIEWERS NOTE ----------
Conditions A and B may be combined into one Condition that addresses both the containment isolation valve pressure boundary intact and containment isolation valve pressure boundary not intact by specifying the limiting Completion Time for each configuration identified in Tables D-1, D-2, and D-3 of Reference 4.

[A.1 and A.2

Condition A is applicable to penetration flow paths with two [or more] containment isolation valves, and penetration flow paths with only one containment isolation valve and a closed system. The closed system must meet the requirements of Reference 3.

In the event one containment isolation valve in one or more penetration flow paths is inoperable, [except for purge valve or shield building bypass leakage not within limit], and the containment isolation valve pressure boundary is intact, the affected penetration flow path must be isolated. The containment isolation valve pressure boundary is considered to be intact when the inoperable containment isolation valve is capable of maintaining the boundary between the contained fluid and the containment or outside atmosphere. An example of when a containment isolation valve would be inoperable and the pressure boundary is considered to be intact is when work is being performed on a valve actuator. The method of isolation must include the use of at least one isolation barrier that cannot be adversely affected by a single active

failure. Isolation barriers that meet this criterion are a closed and de-activated automatic containment isolation valve, a closed manual valve, a blind flange, and a check valve with flow through the valve secured. For a penetration flow path isolated in accordance with Required Action A.1, the device used to isolate the penetration should be the closest available one to containment. Required Action A.1 must be completed within ~~4 hours. The 4 hour Completion Time is reasonable, considering the time required to isolate the penetration and the relative importance of supporting containment OPERABILITY during MODES 1, 2, 3, and 4.~~ the Completion Time specified for each Category of containment isolation valve identified in [a licensee controlled document]. The Completion Time is justified in Reference 4.

----------REVIEWERS NOTE ----------

Conditions A and B may be combined into one Condition that addresses both the containment isolation valve pressure boundary intact and containment isolation valve pressure boundary not intact by specifying the limiting Completion Time for each configuration identified in Tables D-1, D-2, and D-3 of Reference 4.

The plant specific determination of the containment isolation valve Completion Time categories is performed by comparing the plant specific penetration types to the generic penetration types evaluated that are identified in Tables D-1, D-2, and D-3 of Reference 4.

The plant specific application of the generic analysis that justified the generic Completion Time categories is discussed in Section 9.0 of Reference 4.

Plant specific Completion Time categories may also be calculated in lieu of the generic Completion Time categories. This approach is discussed in Section 10.0 of Reference 4.

For plants not adopting the risk-informed extended Completion Time for containment isolation valves, a Completion Time of 4 hours is maintained. The 4 hour Completion Time is reasonable, considering the time required to isolate the penetration and the relative importance of supporting containment OPERABILITY during MODES 1, 2, 3, and 4. A Condition for one or more penetration flow paths with one containment isolation valve inoperable for penetrations with one containment isolation valve and a closed system would be required.

For affected penetration flow paths that cannot be restored to OPERABLE status within the ~~4 hour~~ specified Completion Time and that have been isolated in accordance with Required Action A.1, the affected penetration flow paths must be verified to be isolated on a periodic basis. This is necessary to ensure that containment penetrations required to be isolated following an accident and no longer capable of being automatically

BASES

ACTIONS (continued)

isolated will be in the isolation position should an event occur. This Required Action does not require any testing or device manipulation. Rather, it involves verification that those isolation devices outside containment and capable of being mispositioned are in the correct position. The Completion Time of "once per 31 days for isolation devices outside containment" is appropriate considering the fact that the devices are operated under administrative controls and the probability of their misalignment is low. For the isolation devices inside containment, the time period specified as "prior to entering MODE 4 from MODE 5 if not performed within the previous 92 days" is based on engineering judgment and is considered reasonable in view of the inaccessibility of the isolation devices and other administrative controls that will ensure that isolation device misalignment is an unlikely possibility.

~~Condition A has been modified by a Note indicating that this Condition is only applicable to those penetration flow paths with two [or more] containment isolation valves. For penetration flow paths with only one containment isolation valve and a closed system, Condition C provides the appropriate actions.~~

Required Action A.2 is modified by two Notes. Note 1 applies to isolation devices located in high radiation areas and allows these devices to be verified closed by use of administrative means. Allowing verification by administrative means is considered acceptable, since access to these areas is typically restricted. Note 2 applies to isolation devices that are locked, sealed, or otherwise secured in position and allows these devices to be verified closed by use of administrative means. Allowing verification by administrative means is considered acceptable, since the function of locking, sealing, or securing components is to ensure that these devices are not inadvertently repositioned. Therefore, the probability of misalignment of these devices once they have been verified to be in the proper position, is small.]

[B.1 and B.2

Condition B is applicable to penetration flow paths with two [or more] containment isolation valves, and penetration flow paths with only one containment isolation valve and a closed system. The closed system must meet the requirements of Reference 3.

In the event one containment isolation valve in one or more penetration flow paths is inoperable, [except for purge valve or shield building bypass leakage not within limit,] and the containment isolation valve pressure boundary is not intact, the affected penetration flow path must be isolated. The containment isolation valve pressure boundary is considered not to be intact when the inoperable containment isolation valve is not capable

of maintaining the boundary between the contained fluid and the containment or outside atmosphere. The method of isolation must include the use of at least one isolation barrier that cannot be adversely affected by a single active failure. Isolation barriers that meet this criterion are a closed and de-activated automatic containment isolation valve, a closed manual valve, a blind flange, and a check valve with flow through the valve secured. For a penetration flow path isolated in accordance with Required Action B.1, the device used to isolate the penetration should be the closest available one to containment. Required Action B.1 must be completed within [the Completion Time specified for each Category of containment isolation valve identified in [a licensee controlled document]. The Completion Time is justified in Reference 4.

----------REVIEWERS NOTE ----------

Conditions A and B may be combined into one Condition that addresses both the containment isolation valve pressure boundary intact and containment isolation valve pressure boundary not intact by specifying the limiting Completion Time for each configuration identified in Tables D-1, D-2, and D-3 of Reference 4.

The plant specific determination of the containment isolation valve Completion Time categories is performed by comparing the plant specific penetration types to the generic penetration types evaluated that are identified in Tables D-1, D-2, and D-3 of Reference 4.

The plant specific application of the generic analysis that justified the generic Completion Time categories is discussed in Section 9.0 of Reference 4.

Plant specific Completion Time categories may also be calculated in lieu of the generic Completion Time categories. This approach is discussed in Section 10.0 of Reference 4.

For plants not adopting the risk-informed extended Completion Time for containment isolation valves, a Completion Time of 4 hours is maintained. The 4 hour Completion Time is reasonable, considering the time required to isolate the penetration and the relative importance of supporting containment OPERABILITY during MODES 1, 2, 3, and 4. A Condition for one or more penetration flow paths with one containment isolation valve inoperable for penetrations with one containment isolation valve and a closed system would be required.

For affected penetration flow paths that cannot be restored to OPERABLE status within the specified Completion Time and that have been isolated in accordance with Required Action B.1, the affected penetration flow paths must be verified to be isolated on a periodic basis. This is necessary to ensure that containment penetrations required to be isolated following an accident and no longer capable of being automatically isolated, will be in an isolated position should an event

occur. This Required Action does not require any testing or device manipulation. Rather, it involves verification that those isolation devices outside containment and capable of being mispositioned, are in the correct position. The Completion Time of "once per 31 days for isolation devices outside containment" is appropriate considering the fact that the devices are operated under administrative controls and the probability of their misalignment is low. For isolation devices inside containment, the time period specified as "prior to entering MODE 4 from MODE 5 if not performed within the previous 92 days" is based on engineering judgment, and is considered reasonable in view of the inaccessibility of the isolation devices and other administrative controls that will ensure that isolation device misalignment is an unlikely possibility.

Required Action B.2 is modified by two Notes. Note 1 applies to isolation devices located in high radiation areas and allows these devices to be verified closed by use of administrative means. Allowing verification by administrative means is considered acceptable, since access to these areas is typically restricted. Note 2 applies to isolation devices that are locked, sealed, or otherwise secured in position and allows these devices to be verified closed by use of administrative means. Allowing verification by administrative means is considered acceptable, since the function of locking, sealing, or securing components is to ensure that the devices are not inadvertently repositioned. Therefore, the probability of misalignment of these devices once they have been verified to be in the proper position is small.]

~~B~~C.1

With two [or more] containment isolation valves in one or more penetration flow paths inoperable, [except for purge valve or shield building bypass leakage not within limit,] the affected penetration flow path must be isolated within 1 hour. The method of isolation must include the use of at least one isolation barrier that cannot be adversely affected by a single active failure. Isolation barriers that meet this criterion are a

BASES

ACTIONS (continued)

closed and de-activated automatic valve, a closed manual valve, and a blind flange. The 1 hour Completion Time is consistent with the ACTIONS of LCO 3.6.1. In the event the affected penetration is isolated in accordance with Required Action ~~B.1~~C.1, the affected penetration must be verified to be isolated on a periodic basis per Required Action A.2 or B.2, which remains in effect. This periodic verification is necessary to assure leak tightness of containment and that penetrations requiring isolation following an accident are isolated. The Completion Time of once per 31 days for verifying each affected penetration flow path is isolated is appropriate considering the fact that the valves are operated under administrative control and the probability of their misalignment is low.

Condition C~~B~~ is modified by a Note indicating this Condition is only applicable to penetration flow paths with two [or more] containment isolation valves. ~~Condition A of this LCO addresses the condition of one containment isolation valve inoperable in this type of penetration flow path.~~

~~C.1 and C.2~~

~~With one or more penetration flow paths with one containment isolation valve inoperable, the inoperable valve flow path must be restored to OPERABLE status or the affected penetration flow path must be isolated. The method of isolation must include the use of at least one isolation barrier that cannot be adversely affected by a single active failure. Isolation barriers that meet this criterion are a closed and de-activated automatic valve, a closed manual valve, and a blind flange. A check valve may not be used to isolate the affected penetration flow path. Required Action C.1 must be completed within the 72 hour Completion Time. The specified time period is reasonable considering the relative stability of the closed system (hence, reliability) to act as a penetration isolation boundary and the relative importance of maintaining containment integrity during MODES 1, 2, 3, and 4. In the event the affected penetration flow path is isolated in accordance with Required Action C.1, the affected penetration flow path must be verified to be isolated on a periodic basis. This periodic verification is necessary to assure leak tightness of containment and that containment penetrations requiring isolation following an accident are isolated. The Completion Time of once per 31 days for verifying that each affected penetration flow path is isolated is appropriate because the valves are operated under administrative controls and the probability of their misalignment is low.~~

BASES

ACTIONS (continued)

~~Condition C is modified by a Note indicating that this Condition is only applicable to those penetration flow paths with only one containment isolation valve and a closed system. The closed system must meet the requirements of Ref. 3. This Note is necessary since this Condition is written to specifically address those penetration flow paths in a closed system.~~

~~Required Action C.2 is modified by two Notes. Note 1 applies to valves and blind flanges located in high radiation areas and allows these devices to be verified closed by use of administrative means. Allowing verification by administrative means is considered acceptable, since access to these areas is typically restricted. Note 2 applies to isolation devices that are locked, sealed, or otherwise secured in position and allows these devices to be verified closed by use of administrative means. Allowing verification by administrative means is considered acceptable, since the function of locking, sealing, or securing components is to ensure that these devices are not inadvertently repositioned. Therefore, the probability of misalignment of these valves, once they have been verified to be in the proper position, is small.~~

D.1

REVIEWERS NOTE

The analysis in Reference 4 evaluated each CIV in each penetration individually and determines an acceptable Completion Time based on the ICLERP and ΔLERF for each CIV. It is assumed that only a single CIV is inoperable in one penetration flow path. If plant specific analyses are performed to evaluate multiple inoperable CIVs in separate penetration flow paths, Condition D should be revised to reflect the plant specific analyses.

In the event one containment isolation valve in two or more penetration flow paths is inoperable [except for purge valve or shield building bypass leakage not within limit], all but one of the affected penetration flow path(s) must be isolated. The method of isolation must include the use of at least one isolation barrier that cannot be adversely affected by a single active failure. Isolation barriers that meet this criterion are a closed and de-activated automatic containment isolation valve, a closed manual valve, a blind flange, and a check valve with flow through the valve secured. For a penetration flow path isolated in accordance with Required Action D.1, the device used to isolate the penetration should be the closest available one to containment. Required Action D.1 must be completed within 4 hours. For subsequent containment isolation valve inoperabilities, the Required Action and Completion Time continue to apply to each additional containment isolation valve inoperability, with the Completion Time based on each subsequent entry into the Condition

consistent with Note 2 to the ACTIONS Table (e.g., for each entry into the Condition). Each containment isolation valve(s) that is (are) declared inoperable for subsequent Condition D entries shall meet the Required Action and Completion Time. For the penetration flow paths isolated in accordance with Required Action D.1, the affected penetration(s) must be verified to be isolated on a periodic basis per Required Action A.2 [or B.2], which remains in effect. This periodic verification is necessary to assure that the penetrations requiring isolation following an accident are isolated. The 4 hour Completion Time is reasonable, considering the time required to isolate the penetration and the relative importance of supporting Containment OPERABILITY during MODES 1, 2, 3, and 4.

[~~D~~E.1

With the shield building bypass leakage rate (SR 3.6.3.11) [or purge valve leakage rate (SR 3.6.3.7)] not within limit, the assumptions of the safety analyses are not met. Therefore, the leakage must be restored to within limit. Restoration can be accomplished by isolating the penetration(s) that caused the limit to be exceeded by use of one closed and de-activated automatic valve, closed manual valve, or blind flange. When a penetration is isolated the leakage rate for the isolated penetration is assumed to be the actual pathway leakage through the isolation device. If two isolation devices are used to isolate the penetration, the leakage rate is assumed to be the lesser actual pathway leakage of the two devices. The 4 hour Completion Time for shield building bypass leakage is reasonable considering the time required to restore the leakage by isolating the penetration(s) and the relative importance of secondary containment bypass leakage to the overall containment function. [The 24 hour Completion time for purge valve leakage is acceptable considering the purge valves remain closed so that a gross breach of the containment does not exist.]

BASES

ACTIONS (continued)

----------REVIEWER'S NOTE----------
[The bracketed options provided in ACTION ~~D~~ E reflect options in plant design and options in adopting the associated leakage rate Surveillances.

The options (in both ACTION ~~D~~ E and ACTION ~~E~~F) for purge valve leakage, are based primarily on the design - if leakage rates can be measured separately for each purge valve, ACTION ~~E~~ F is intended to apply. This would be required to be able to implement Required Action ~~E~~F.3. Should the design allow only for leak testing both purge valves simultaneously, then the Completion Time for ACTION ~~D~~ E should include the "24 hours for purge valve leakage" and ACTION ~~E~~ F should be eliminated.]]

[~~E~~F.1, ~~E~~F.2, and ~~E~~F.3

In the event one or more containment purge valves in one or more penetration flow paths are not within the purge valve leakage limits, purge valve leakage must be restored to within limits, or the affected penetration flow path must be isolated. The method of isolation must be by the use of at least one isolation barrier that cannot be adversely affected by a single active failure. Isolation barriers that meet this criterion are a [closed and de-activated automatic valve, closed manual valve, or blind flange]. A purge valve with resilient seals utilized to satisfy Required Action ~~E~~F.1 must have been demonstrated to meet the leakage requirements of SR 3.6.3.7. The specified Completion Time is reasonable, considering that one containment purge valve remains closed so that a gross breach of containment does not exist.

In accordance with Required Action ~~E~~F.2, this penetration flow path must be verified to be isolated on a periodic basis. The periodic verification is necessary to ensure that containment penetrations required to be isolated following an accident, which are no longer capable of being automatically isolated, will be in the isolation position should an event occur. This Required Action does not require any testing or valve manipulation. Rather, it involves verification that those isolation devices outside containment capable of being mispositioned are in the correct position. For the isolation devices inside containment, the time period specified as "prior to entering MODE 4 from MODE 5 if not performed within the previous 92 days" is based on engineering judgment and is considered reasonable in view of the inaccessibility of the isolation devices and other administrative controls that will ensure that isolation device misalignment is an unlikely possibility.

BASES

ACTIONS (continued)

For the containment purge valve with resilient seal that is isolated in accordance with Required Action ~~E~~F.1, SR 3.6.3.7 must be performed at least once every [92] days. This assures that degradation of the resilient seal is detected and confirms that the leakage rate of the containment purge valve does not increase during the time the penetration is isolated. The normal Frequency for SR 3.6.3.7, 184 days, is based on an NRC initiative, Generic Issue B-20 (Ref. 4~~5~~). Since more reliance is placed on a single valve while in this Condition, it is prudent to perform the SR more often. Therefore, a Frequency of once per [92] days was chosen and has been shown to be acceptable based on operating experience.

Required Action ~~E~~F.2 is modified by two Notes. Note 1 applies to isolation devices located in high radiation areas and allows these devices to be verified closed by use of administrative means. Allowing verification by administrative means is considered acceptable, since access to these areas is typically restricted. Note 2 applies to isolation devices that are locked, sealed, or otherwise secured in position and allows these devices to be verified closed by use of administrative means. Allowing verification by administrative means is considered acceptable, since the function of locking, sealing, or securing components is to ensure that these devices are not inadvertently repositioned.]

~~F~~G.1 and ~~F~~G.2

If the Required Actions and associated Completion Times are not met, the plant must be brought to a MODE in which the LCO does not apply. To achieve this status, the plant must be brought to at least MODE 3 within 6 hours and to MODE 5 within 36 hours. The allowed Completion Times are reasonable, based on operating experience, to reach the required plant conditions from full power conditions in an orderly manner and without challenging plant systems.

SURVEILLANCE REQUIREMENTS

[SR 3.6.3.1

Each [42] inch containment purge valve is required to be verified sealed closed at 31 day intervals. This Surveillance is designed to ensure that a gross breach of containment is not caused by an inadvertent or spurious opening of a containment purge valve. Detailed analysis of the purge valves failed to conclusively demonstrate their ability to close during a LOCA in time to limit offsite doses. Therefore, these valves are required to be in the sealed closed position during MODES 1, 2, 3, and 4. A

BASES

SURVEILLANCE REQUIREMENTS (continued)

containment purge valve that is sealed closed must have motive power to the valve operator removed. This can be accomplished by de-energizing the source of electric power or by removing the air supply to the valve operator. In this application, the term "sealed" has no connotation of leak tightness. The Frequency is a result of an NRC initiative, Generic Issue B-24 (Ref. ~~5~~6), related to containment purge valve use during plant operations. In the event purge valve leakage requires entry into Condition E, the Surveillance permits opening one purge valve in a penetration flow path to perform repairs.]

[SR 3.6.3.2

This SR ensures that the minipurge valves are closed as required or, if open, open for an allowable reason. If a purge valve is open in violation of this SR, the valve is considered inoperable. If the inoperable valve is not otherwise known to have excessive leakage when closed, it is not considered to have leakage outside of limits. The SR is not required to be met when the minipurge valves are open for the reasons stated. The valves may be opened for pressure control, ALARA or air quality considerations for personnel entry, or for Surveillances that require the valves to be open. The minipurge valves are capable of closing in the environment following a LOCA. Therefore, these valves are allowed to be open for limited periods of time. The 31 day Frequency is consistent with other containment isolation valve requirements discussed in SR 3.6.3.3.]

SR 3.6.3.3

This SR requires verification that each containment isolation manual valve and blind flange located outside containment and not locked, sealed, or otherwise secured and required to be closed during accident conditions is closed. The SR helps to ensure that post accident leakage of radioactive fluids or gases outside of the containment boundary is within design limits. This SR does not require any testing or valve manipulation. Rather, it involves verification that those containment isolation valves outside containment and capable of being mispositioned are in the correct position. Since verification of valve position for containment isolation valves outside containment is relatively easy,

BASES

SURVEILLANCE REQUIREMENTS (continued)

SR 3.6.3.5

Verifying that the isolation time of each automatic power operated containment isolation valve is within limits is required to demonstrate OPERABILITY. The isolation time test ensures the valve will isolate in a time period less than or equal to that assumed in the safety analyses. [The isolation time and Frequency of this SR are in accordance with the Inservice Testing Program or 92 days.]

[SR 3.6.3.6

In subatmospheric containments, the check valves that serve a containment isolation function are weight or spring loaded to provide positive closure in the direction of flow. This ensures that these check valves will remain closed when the inside containment atmosphere returns to subatmospheric conditions following a DBA. SR 3.6.3.6 requires verification of the operation of the check valves that are testable during unit operation. The Frequency of 92 days is consistent with the Inservice Testing Program requirement for valve testing on a 92 day Frequency.]

[SR 3.6.3.7

For containment purge valves with resilient seals, additional leakage rate testing beyond the test requirements of 10 CFR 50, Appendix J, Option [A][B], is required to ensure OPERABILITY. Operating experience has demonstrated that this type of seal has the potential to degrade in a shorter time period than do other seal types. Based on this observation and the importance of maintaining this penetration leak tight (due to the direct path between containment and the environment), a Frequency of 184 days was established as part of the NRC resolution of Generic Issue B-20, "Containment Leakage Due to Seal Deterioration" (Ref. 45).

Additionally, this SR must be performed within 92 days after opening the valve. The 92 day Frequency was chosen recognizing that cycling the valve could introduce additional seal degradation (beyond that occurring to a valve that has not been opened). Thus, decreasing the interval (from 184 days) is a prudent measure after a valve has been opened.]

BASES

REFERENCES

1. FSAR, Section [15].
2. FSAR, Section [6.2].
3. Standard Review Plan 6.2.4.
4. WCAP-15791-A, Rev. 2, "Risk-Informed Evaluation of Exensions to Containment Isolation Valve Completion Times," [Date to be supplied later].
~~4~~5. Generic Issue B-20, "Containment Leakage Due to Seal Deterioration."
~~5~~6. Generic Issue B-24.

APPENDIX B

EXAMPLE WESSAGE FAULT TREES AND OUTPUT FILES

The information provided in this appendix is proprietary to Westinghouse Electric Company. Due to the volume of information, it has not been bracketed. The coding associated with this information is "a,c."

Note 1: Within this Appendix, the WesSAGE output files appear immediately after their associated fault trees.

Note 2: A list of all the WesSAGE probability results from each output file is provided at the front of this Appendix.

Table B ΔLERF Group Numbers and Corresponding Fault Tree and Output Files

Calculation Number and Group (from Sections 8.2.2 - 8.2.4)	Fault Tree (Appendix B)	Output Files (Appendix B)
I,A #1; I,B #3; I,C #3	1.ft	1_4all.out 1_168all.out
I,A #2; I,B #4; I,C #4; I,D #1	2.ft	2_4all.out 2_168all.out
I,A #3; I,B #5; I,C #5	3.ft	3_4sov.out 3_168sov.out
I,A #4; I,B #6; I,C #6	4.ft	4_4sov.out 4_168sov.out
II,A #2	30a.ft	30a_4all.out 30a168al.out
II,A #10	36a.ft 36b.ft	36a_4all.out 36a168al.out 36b_4all.out 36b168al.out
II,B #1	39.ft	39_4sov.out 39168sov.out
II,B #3	14.ft	14_4sov.out 14168sov.out
III,A #1	16.ft	16_4all.out 16168all.out
III,A #2; III,B #1	17.ft	17_4sov.out 17168sov.out

APPENDIX C

WCGS CIVS – USAR, FIGURE 6.2.4-1

VALVE NO.	LINE/ VALVE SIZE, IN.	INSIDE/ OUTSIDE CONT.	NORMAL FLOW DIRECTION	VALVE TYPE	VALVE OPERATOR	POWER SOURCE	PRIMARY ACTUATION SIGNAL	SECONDARY ACTUATION SIGNAL	MAXIMUM CLOSURE TIME (SEC.)	VALVE POSITION					APPENDIX J REQUIREMENT
										NORMAL	SHUTDOWN	FAIL	PRIMARY	SECONDARY	

ASSOCIATED WITH A SAFETY FEATURES SYS. YES [X] NO [ ]

FLUID CONTAINED: STEAM

LENGTH OF PIPING TO OUTERMOST ISOLATION VALVE: 40.0ft

APPLICABLE GDC NO. NONE

GENERAL COMMENTS:

THE CONTAINMENT PENETRATIONS ASSOCIATED WITH THE STEAM GENERATORS ARE NOT SUBJECT TO GDC-57, SINCE THE CONTAINMENT BARRIER INTEGRITY IS NOT BREACHED. THE BOUNDARY OR BARRIER AGAINST FISSION PRODUCT LEAKAGE TO THE ENVIRONMENT IS THE INSIDE OF THE STEAM GENERATOR TUBES AND THE OUTSIDE OF THE LINES EMANATING FROM THE STEAM GENERATOR SHELLS.

AS SHOWN ON FIGURE 10.3-1, THE STEAM GENERATOR SHELL EXTENDS TO THE VENT VALVES ON THE CONDENSATE POTS FOR THE MAIN STEAM FLOW TRANSMITTERS.

THIS PENETRATION IS INCLUDED FOR FIGURE COMPLETENESS. NONE OF THE VALVES SHOWN ARE CONSIDERED CONTAINMENT ISOLATION VALVES.

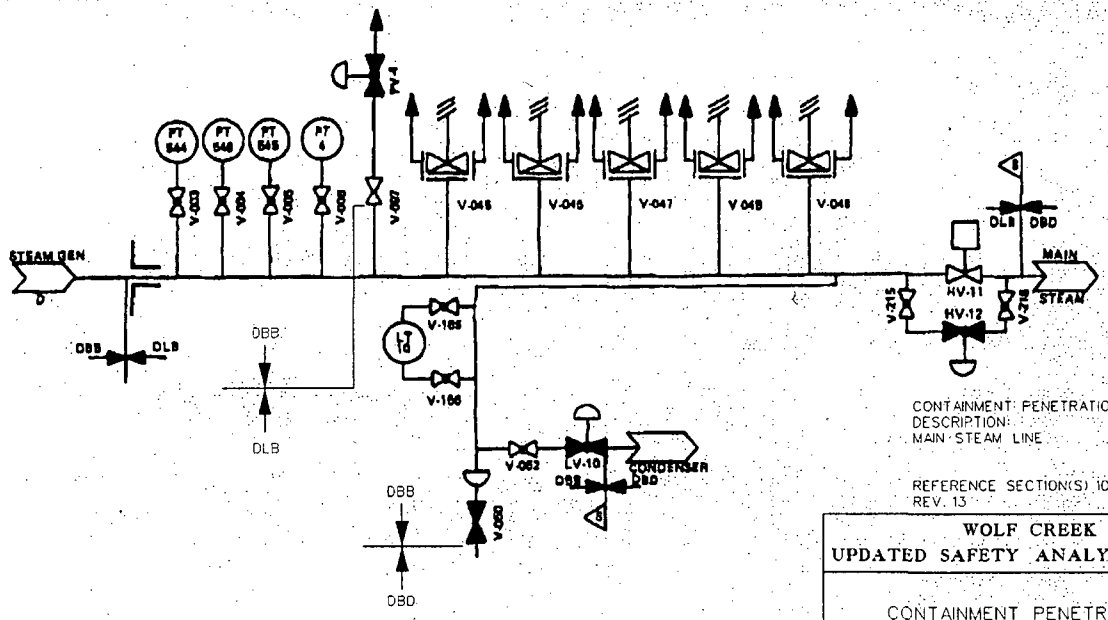

CONTAINMENT PENETRATION NO. P-1
DESCRIPTION:
MAIN STEAM LINE

REFERENCE SECTION(S) 10.3
REV. 13

WOLF CREEK
UPDATED SAFETY ANALYSIS REPORT

CONTAINMENT PENETRATIONS
FIGURE 6.2.4-1
PAGE 1 OF 74

VALVE NO.	LINE/ VALVE SIZE, IN.	INSIDE/ OUTSIDE CONT.	NORMAL FLOW DIRECTION	VALVE TYPE	VALVE OPERATOR	POWER SOURCE	PRIMARY ACTUATION SIGNAL	SECONDARY ACTUATION SIGNAL	MAXIMUM CLOSURE TIME (SEC.)	VALVE POSITION					APPENDIX J REQUIREMENT
										NORMAL	SHUTDOWN	FAIL	PRIMARY	SECONDARY	

ASSOCIATED WITH A SAFETY FEATURES SYS.. YES [X] NO [ ]

FLUID CONTAINED: STEAM

LENGTH OF PIPING TO OUTERMOST ISOLATION VALVE: 37.9ft

APPLICABLE GDC NO: NONE

GENERAL COMMENTS:

THE CONTAINMENT PENETRATIONS ASSOCIATED WITH THE STEAM GENERATORS ARE NOT SUBJECT TO GDC 57, SINCE THE CONTAINMENT BARRIER INTEGRITY IS NOT BREACHED. THE BOUNDARY OR BARRIER AGAINST FISSION PRODUCT LEAKAGE TO THE ENVIRONMENT IS THE INSIDE OF THE STEAM GENERATOR TUBES AND THE OUTSIDE OF THE LINES EMANATING FROM THE STEAM GENERATOR SHELLS.

AS SHOWN ON FIGURE 10.3-1, THE STEAM GENERATOR SHELL EXTENDS TO THE VENT VALVES ON THE CONDENSATE POTS FOR THE MAIN STEAM FLOW TRANSMITTERS.

THIS PENETRATION IS INCLUDED FOR FIGURE COMPLETENESS. NONE OF THE VALVES SHOWN ARE CONSIDERED CONTAINMENT ISOLATION VALVES.

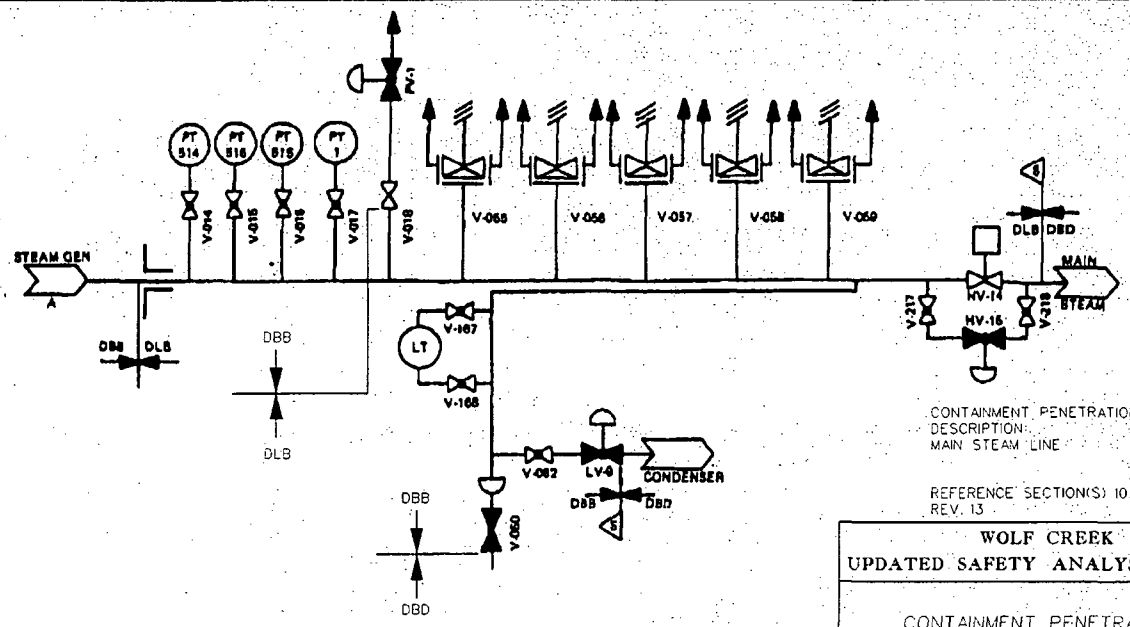

CONTAINMENT PENETRATION NO. P-2
DESCRIPTION:
MAIN STEAM LINE

REFERENCE SECTION(S) 10.3
REV. 13

WOLF CREEK
UPDATED SAFETY ANALYSIS REPORT

CONTAINMENT PENETRATIONS
FIGURE 6.2.4-1
PAGE 2 OF 74

VALVE NO.	LINE/ VALVE SIZE, IN.	INSIDE/ OUTSIDE CONT.	NORMAL FLOW DIRECTION	VALVE TYPE	VALVE OPERATOR	POWER SOURCE	PRIMARY ACTUATION SIGNAL	SECONDARY ACTUATION SIGNAL	MAXIMUM CLOSURE TIME (SEC.)	VALVE POSITION					APPENDIX J REQUIREMENT
										NORMAL	SHUTDOWN	FAIL	PRIMARY	SECONDARY	

ASSOCIATED WITH A SAFETY FEATURES SYS. YES [X] NO [ ]

FLUID CONTAINED: STEAM

LENGTH OF PIPING TO OUTERMOST ISOLATION VALVE: 37.9ft

APPLICABLE GDC NO. NONE

GENERAL COMMENTS:

THE CONTAINMENT PENETRATIONS ASSOCIATED WITH THE STEAM GENERATORS ARE NOT SUBJECT TO GDC 57, SINCE THE CONTAINMENT BARRIER INTEGRITY IS NOT BREACHED. THE BOUNDARY OR BARRIER AGAINST FISSION PRODUCT LEAKAGE TO THE ENVIRONMENT IS THE INSIDE OF THE STEAM GENERATOR TUBES AND THE OUTSIDE OF THE LINES EMANATING FROM THE STEAM GENERATOR SHELLS.

AS SHOWN ON FIGURE 10.3-1, THE STEAM GENERATOR SHELL EXTENDS TO THE VENT VALVES ON THE CONDENSATE POTS FOR THE MAIN STEAM FLOW TRANSMITTERS.

THIS PENETRATION IS INCLUDED FOR FIGURE COMPLETENESS. NONE OF THE VALVES SHOWN ARE CONSIDERED CONTAINMENT ISOLATION VALVES.

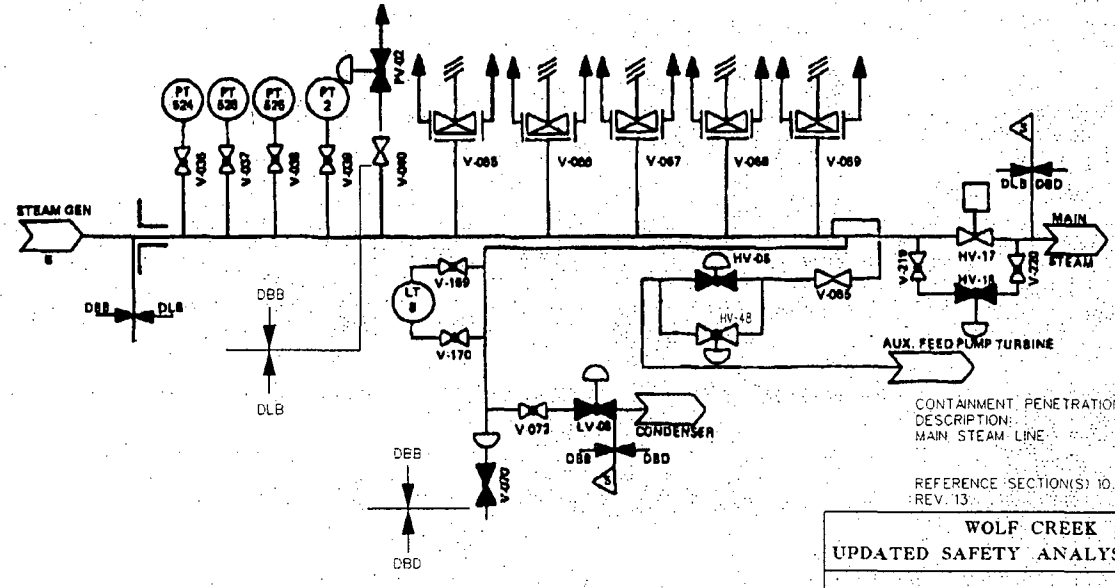

CONTAINMENT PENETRATION NO. P-3
DESCRIPTION:
MAIN STEAM LINE

REFERENCE SECTION(S) 10.3
REV. 13

WOLF CREEK
UPDATED SAFETY ANALYSIS REPORT

CONTAINMENT PENETRATIONS
FIGURE 6.2.4-1
PAGE 3 OF 7.4

VALVE NO.	LINE/ VALVE SIZE, IN.	INSIDE/ OUTSIDE CONT.	NORMAL FLOW DIRECTION	VALVE TYPE	VALVE OPERATOR	POWER SOURCE	PRIMARY ACTUATION SIGNAL	SECONDARY ACTUATION SIGNAL	MAXIMUM CLOSURE TIME (SEC.)	VALVE POSITION					APPENDIX J REQUIREMENT
										NORMAL	SHUTDOWN	FAIL	PRIMARY	SECONDARY	

ASSOCIATED WITH A SAFETY FEATURES SYS. YES [X] NO [ ]

FLUID CONTAINED: STEAM

LENGTH OF PIPING TO OUTERMOST ISOLATION VALVE 40.0ft

APPLICABLE GDC NO. NONE

GENERAL COMMENTS:

THE CONTAINMENT PENETRATIONS ASSOCIATED WITH THE STEAM GENERATORS ARE NOT SUBJECT TO GDC-57, SINCE THE CONTAINMENT BARRIER INTEGRITY IS NOT BREACHED. THE BOUNDARY OR BARRIER AGAINST FISSION PRODUCT LEAKAGE TO THE ENVIRONMENT IS THE INSIDE OF THE STEAM GENERATOR TUBES AND THE OUTSIDE OF THE LINES EMANATING FROM THE STEAM GENERATOR SHELLS.

AS SHOWN ON FIGURE 10.3-1, THE STEAM GENERATOR SHELL EXTENDS TO THE VENT VALVES ON THE CONDENSATE POTS FOR THE MAIN STEAM FLOW TRANSMITTERS.

THIS PENETRATION IS INCLUDED FOR FIGURE COMPLETENESS. NONE OF THE VALVES SHOWN ARE CONSIDERED CONTAINMENT ISOLATION VALVES.

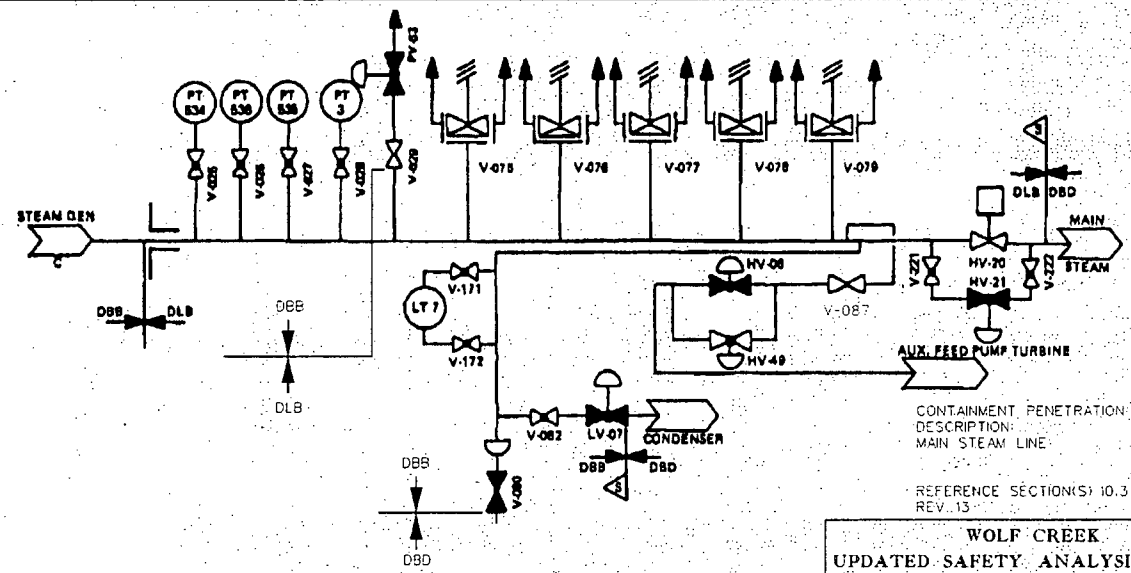

WOLF CREEK
UPDATED SAFETY ANALYSIS REPORT

CONTAINMENT PENETRATIONS
FIGURE 6.2.4-1
PAGE 4 OF 74

VALVE NO.	LINE/ VALVE SIZE, IN.	INSIDE/ OUTSIDE CONT.	NORMAL FLOW DIRECTION	VALVE TYPE	VALVE OPERATOR	POWER SOURCE	PRIMARY ACTUATION SIGNAL	SECONDARY ACTUATION SIGNAL	MAXIMUM CLOSURE TIME (SEC.)	VALVE POSITION					APPENDIX J REQUIREMENT
										NORMAL	SHUTDOWN	FAIL	PRIMARY	SECONDARY	

ASSOCIATED WITH A SAFETY FEATURES SYS. YES [X] NO [ ]

FLUID CONTAINED: WATER

LENGTH OF PIPING TO OUTERMOST ISOLATION VALVE: 15ft

APPLICABLE GDC NO. NONE

GENERAL COMMENTS:

THE CONTAINMENT PENETRATIONS ASSOCIATED WITH THE STEAM GENERATORS ARE NOT SUBJECT TO GDC-57, SINCE THE CONTAINMENT BARRIER INTEGRITY IS NOT BREACHED. THE BOUNDARY OR BARRIER AGAINST FISSION PRODUCT LEAKAGE TO THE ENVIRONMENT IS THE INSIDE OF THE STEAM GENERATOR TUBES AND THE OUTSIDE OF THE LINES EMANATING FROM THE STEAM GENERATOR SHELLS.

THIS PENETRATION IS INCLUDED FOR FIGURE COMPLETENESS. NONE OF THE VALVES SHOWN ARE CONSIDERED CONTAINMENT ISOLATION VALVES.

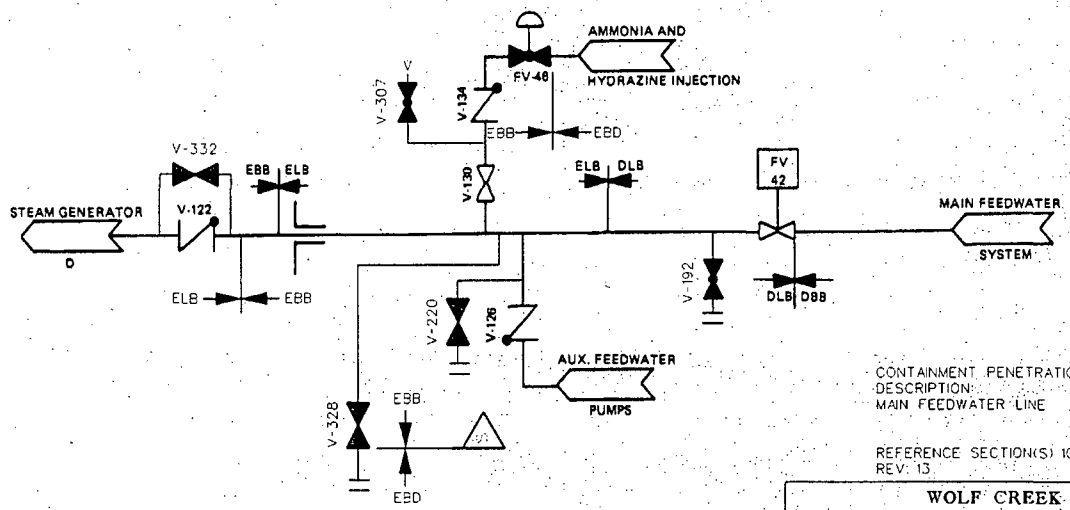

CONTAINMENT PENETRATION NO. P-5
DESCRIPTION:
MAIN FEEDWATER LINE

REFERENCE SECTION(S) 10.4.7
REV. 13

WOLF CREEK
UPDATED SAFETY ANALYSIS REPORT

CONTAINMENT PENETRATIONS
FIGURE 6.2.4-1
PAGE 5 OF 74

VALVE NO.	LINE/ VALVE SIZE, IN.	INSIDE/ OUTSIDE CONT.	NORMAL FLOW DIRECTION	VALVE TYPE	VALVE OPERATOR	POWER SOURCE	PRIMARY ACTUATION SIGNAL	SECONDARY ACTUATION SIGNAL	MAXIMUM CLOSURE TIME (SEC.)	VALVE POSITION					APPENDIX J REQUIREMENT
										NORMAL	SHUTDOWN	FAIL	PRIMARY	SECONDARY	

ASSOCIATED WITH A SAFETY FEATURES SYS. YES [X] NO [ ]

FLUID CONTAINED: WATER

LENGTH OF PIPING TO OUTERMOST ISOLATION VALVE: 13.4 FT

APPLICABLE GDC NO. NONE

GENERAL COMMENTS:

THE CONTAINMENT PENETRATIONS ASSOCIATED WITH THE STEAM GENERATORS ARE NOT SUBJECT TO GDC-57, SINCE THE CONTAINMENT BARRIER INTEGRITY IS NOT BREACHED. THE BOUNDARY OR BARRIER AGAINST FISSION PRODUCT LEAKAGE TO THE ENVIRONMENT IS THE INSIDE OF THE STEAM GENERATOR TUBES AND THE OUTSIDE OF THE LINES EMANATING FROM THE STEAM GENERATOR SHELLS.

THIS PENETRATION IS INCLUDED FOR FIGURE COMPLETENESS. NONE OF THE VALVES SHOWN ARE CONSIDERED CONTAINMENT ISOLATION VALVES.

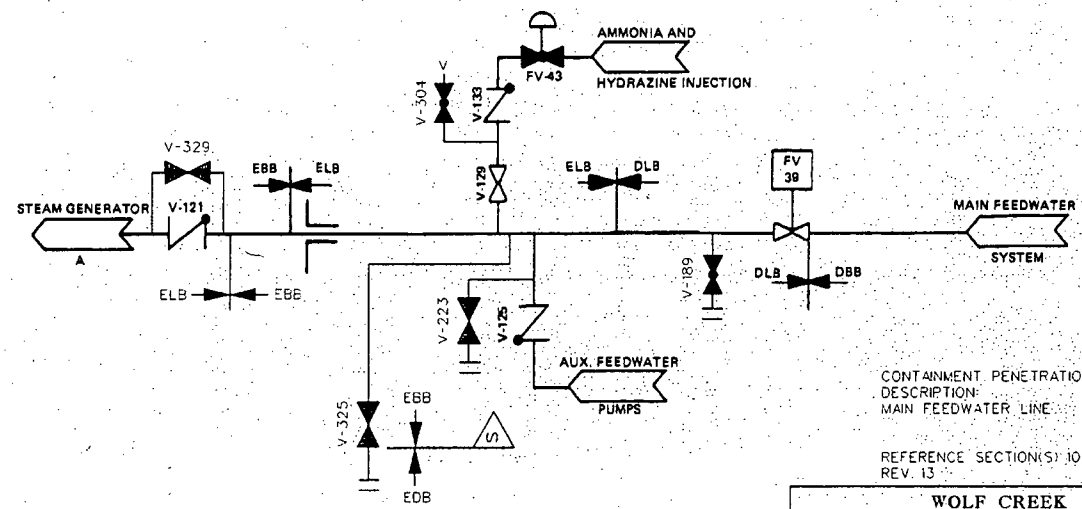

CONTAINMENT PENETRATION NO. P-6
DESCRIPTION:
MAIN FEEDWATER LINE

REFERENCE SECTION(S) 10.4.7
REV. 13

WOLF CREEK
UPDATED SAFETY ANALYSIS REPORT

CONTAINMENT PENETRATIONS
FIGURE 6.2.4-1
PAGE 6 OF 74

VALVE NO.	LINE/ VALVE SIZE, IN.	INSIDE/ OUTSIDE CONT.	NORMAL FLOW DIRECTION	VALVE TYPE	VALVE OPERATOR	POWER SOURCE	PRIMARY ACTUATION SIGNAL	SECONDARY ACTUATION SIGNAL	MAXIMUM CLOSURE TIME (SEC.)	VALVE POSITION					APPENDIX J REQUIREMENT
										NORMAL	SHUTDOWN	FAIL	PRIMARY	SECONDARY	

ASSOCIATED WITH A SAFETY FEATURES SYS. YES [X] NO [ ]

FLUID CONTAINED: WATER

LENGTH OF PIPING TO OUTERMOST ISOLATION VALVE: 13.4 FT

APPLICABLE GDC NO. NONE

GENERAL COMMENTS:

THE CONTAINMENT PENETRATIONS ASSOCIATED WITH THE STEAM GENERATORS ARE NOT SUBJECT TO GDC-57, SINCE THE CONTAINMENT BARRIER INTEGRITY IS NOT BREACHED. THE BOUNDARY OR BARRIER AGAINST FISSION PRODUCT LEAKAGE TO THE ENVIRONMENT IS THE INSIDE OF THE STEAM GENERATOR TUBES AND THE OUTSIDE OF THE LINES EMANATING FROM THE STEAM GENERATOR SHELLS.

THIS PENETRATION IS INCLUDED FOR FIGURE COMPLETENESS. NONE OF THE VALVES SHOWN ARE CONSIDERED CONTAINMENT ISOLATION VALVES.

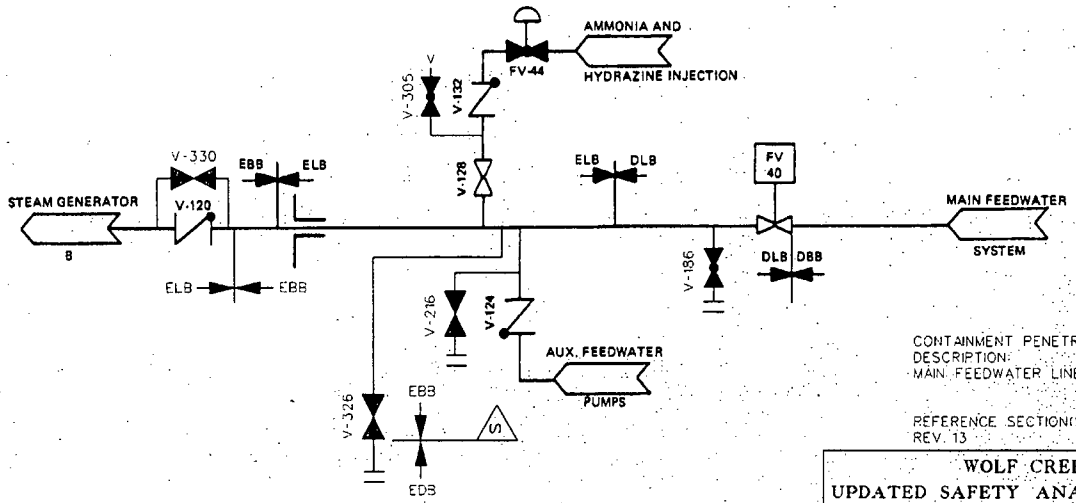

CONTAINMENT PENETRATION NO. P-7
DESCRIPTION:
MAIN FEEDWATER LINE

REFERENCE SECTION(S) 10.4.7
REV. 13

WOLF CREEK
UPDATED SAFETY ANALYSIS REPORT

CONTAINMENT PENETRATIONS
FIGURE 6.2.4-1
PAGE 7 OF 74

VALVE NO.	LINE/ VALVE SIZE, IN.	INSIDE/ OUTSIDE CONT.	NORMAL FLOW DIRECTION	VALVE TYPE	VALVE OPERATOR	POWER SOURCE	PRIMARY ACTUATION SIGNAL	SECONDARY ACTUATION SIGNAL	MAXIMUM CLOSURE TIME (SEC.)	VALVE POSITION					APPENDIX J REQUIREMENT
										NORMAL	SHUTDOWN	FAIL	PRIMARY	SECONDARY	

ASSOCIATED WITH A SAFETY FEATURES SYS. YES [X] NO [ ]

FLUID CONTAINED: WATER

LENGTH OF PIPING TO OUTERMOST ISOLATION VALVE: 15.2 FT

APPLICABLE GDC NO. NONE

GENERAL COMMENTS:

THE CONTAINMENT PENETRATIONS ASSOCIATED WITH THE STEAM GENERATORS ARE NOT SUBJECT TO GDC-57, SINCE THE CONTAINMENT BARRIER INTEGRITY IS NOT BREACHED. THE BOUNDARY OR BARRIER AGAINST FISSION PRODUCT LEAKAGE TO THE ENVIRONMENT IS THE INSIDE OF THE STEAM GENERATOR TUBES AND THE OUTSIDE OF THE LINES EMANATING FROM THE STEAM GENERATOR SHELLS.

THIS PENETRATION IS INCLUDED FOR FIGURE COMPLETENESS. NONE OF THE VALVES SHOWN ARE CONSIDERED CONTAINMENT ISOLATION VALVES.

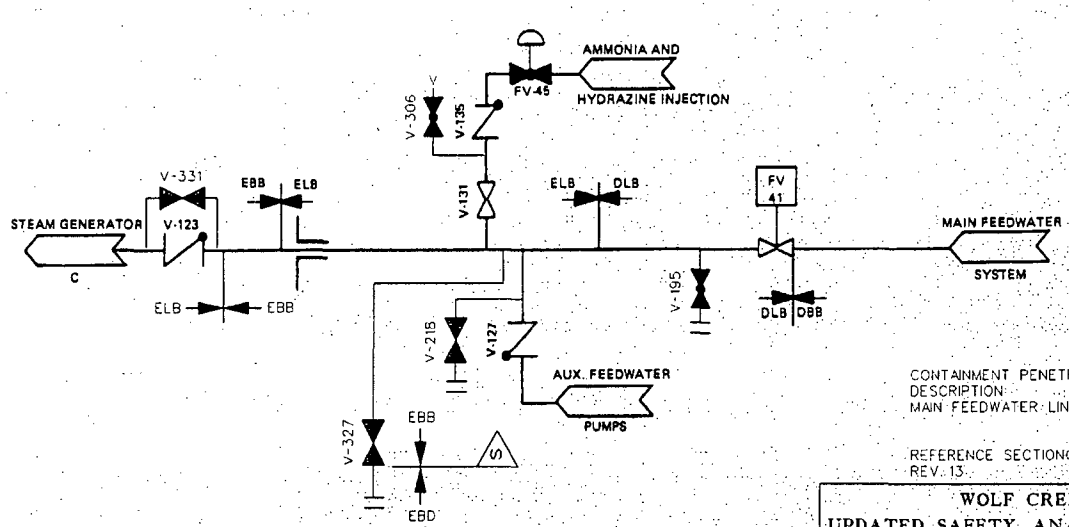

CONTAINMENT PENETRATION NO. P-8
DESCRIPTION
MAIN FEEDWATER LINE

REFERENCE SECTION(S) 10.4.7
REV. 13

WOLF CREEK
UPDATED SAFETY ANALYSIS REPORT

CONTAINMENT PENETRATIONS
FIGURE 6.2.4-1
PAGE 8 OF 74

VALVE NO.	LINE/ VALVE SIZE, IN.	INSIDE/ OUTSIDE CONT.	NORMAL FLOW DIRECTION	VALVE TYPE	VALVE OPERATOR	POWER SOURCE	PRIMARY ACTUATION SIGNAL	SECONDARY ACTUATION SIGNAL	MAXIMUM CLOSURE TIME (SEC.)	VALVE POSITION					APPENDIX J REQUIREMENT
										NORMAL	SHUTDOWN	FAIL	PRIMARY	SECONDARY	

ASSOCIATED WITH A SAFETY FEATURES SYS. YES [X] NO [ ]

FLUID CONTAINED: WATER

LENGTH OF PIPING TO OUTERMOST ISOLATION VALVE: 8.5 FT

APPLICABLE GDC NO. NONE

GENERAL COMMENTS:

THE CONTAINMENT PENETRATIONS ASSOCIATED WITH THE STEAM GENERATORS ARE NOT SUBJECT TO GDC-57, SINCE THE CONTAINMENT BARRIER INTEGRITY IS NOT BREACHED. THE BOUNDARY OR BARRIER AGAINST FISSION PRODUCT LEAKAGE TO THE ENVIRONMENT IS THE INSIDE OF THE STEAM GENERATOR TUBES AND THE OUTSIDE OF THE LINES EMANATING FROM THE STEAM GENERATOR SHELLS.

THIS PENETRATION IS INCLUDED FOR FIGURE COMPLETENESS. NONE OF THE VALVES SHOWN ARE CONSIDERED CONTAINMENT ISOLATION VALVES.

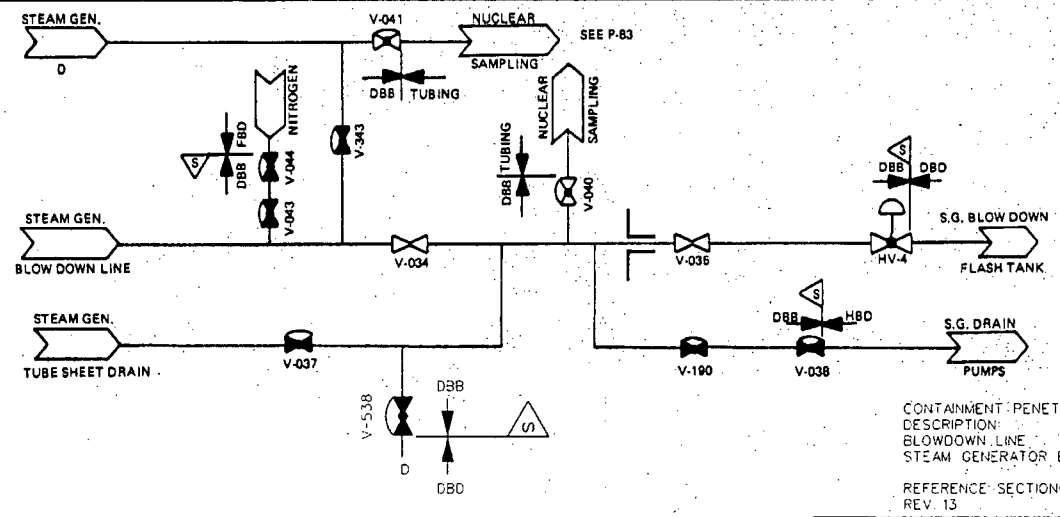

CONTAINMENT PENETRATION NO. P-9
DESCRIPTION:
BLOWDOWN LINE
STEAM GENERATOR BLOWDOWN SYSTEM

REFERENCE SECTION(S) 10.4.8
REV. 13

WOLF CREEK
UPDATED SAFETY ANALYSIS REPORT

CONTAINMENT PENETRATIONS
FIGURE 6.2.4-1
PAGE 9 OF 74

VALVE NO.	LINE/ VALVE SIZE, IN.	INSIDE/ OUTSIDE CONT.	NORMAL FLOW DIRECTION	VALVE TYPE	VALVE OPERATOR	POWER SOURCE	PRIMARY ACTUATION SIGNAL	SECONDARY ACTUATION SIGNAL	MAXIMUM CLOSURE TIME (SEC.)	VALVE POSITION					APPENDIX J REQUIREMENT
										NORMAL	SHUTDOWN	FAIL	PRIMARY	SECONDARY	

ASSOCIATED WITH A SAFETY FEATURES SYS. YES [X] NO [ ]

FLUID CONTAINED: WATER

LENGTH OF PIPING TO OUTERMOST ISOLATION VALVE: 5.8 FT

APPLICABLE GDC NO. NONE

GENERAL COMMENTS:

THE CONTAINMENT PENETRATIONS ASSOCIATED WITH THE STEAM GENERATORS ARE NOT SUBJECT TO GDC-57, SINCE THE CONTAINMENT BARRIER INTEGRITY IS NOT BREACHED. THE BOUNDARY OR BARRIER AGAINST FISSION PRODUCT LEAKAGE TO THE ENVIRONMENT IS THE INSIDE OF THE STEAM GENERATOR TUBES AND THE OUTSIDE OF THE LINES EMANATING FROM THE STEAM GENERATOR SHELLS.

THIS PENETRATION IS INCLUDED FOR FIGURE COMPLETENESS. NONE OF THE VALVES SHOWN ARE CONSIDERED CONTAINMENT ISOLATION VALVES.

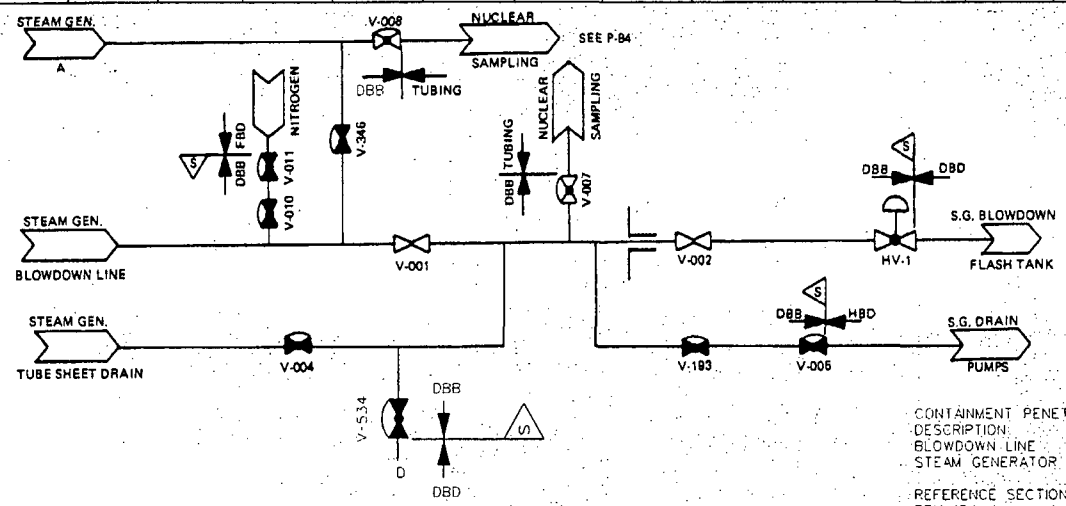

CONTAINMENT PENETRATION NO. P-10
DESCRIPTION:
BLOWDOWN LINE
STEAM GENERATOR BLOWDOWN SYSTEM

REFERENCE SECTION(S) 10.4.8
REV. 13

WOLF CREEK
UPDATED SAFETY ANALYSIS REPORT

CONTAINMENT PENETRATIONS
FIGURE 6.2.4-1
PAGE 10 OF 74

VALVE NO.	LINE/ VALVE SIZE, IN.	INSIDE/ OUTSIDE CONT.	NORMAL FLOW DIRECTION	VALVE TYPE	VALVE OPERATOR	POWER SOURCE	PRIMARY ACTUATION SIGNAL	SECONDARY ACTUATION SIGNAL	MAXIMUM CLOSURE TIME (SEC.)	VALVE POSITION					APPENDIX J REQUIREMENT
										NORMAL	SHUTDOWN	FAIL	PRIMARY	SECONDARY	

ASSOCIATED WITH A SAFETY FEATURES SYS.	YES [X] NO [ ]
FLUID CONTAINED: WATER	
LENGTH OF PIPING TO OUTERMOST ISOLATION VALVE:	5.3 FT
APPLICABLE GDC NO.	NONE

GENERAL COMMENTS:

THE CONTAINMENT PENETRATIONS ASSOCIATED WITH THE STEAM GENERATORS ARE NOT SUBJECT TO GDC-57, SINCE THE CONTAINMENT BARRIER INTEGRITY IS NOT BREACHED. THE BOUNDARY OR BARRIER AGAINST FISSION PRODUCT LEAKAGE TO THE ENVIRONMENT IS THE INSIDE OF THE STEAM GENERATOR TUBES AND THE OUTSIDE OF THE LINES EMANATING FROM THE STEAM GENERATOR SHELLS.

THIS PENETRATION IS INCLUDED FOR FIGURE COMPLETENESS. NONE OF THE VALVES SHOWN ARE CONSIDERED CONTAINMENT ISOLATION VALVES.

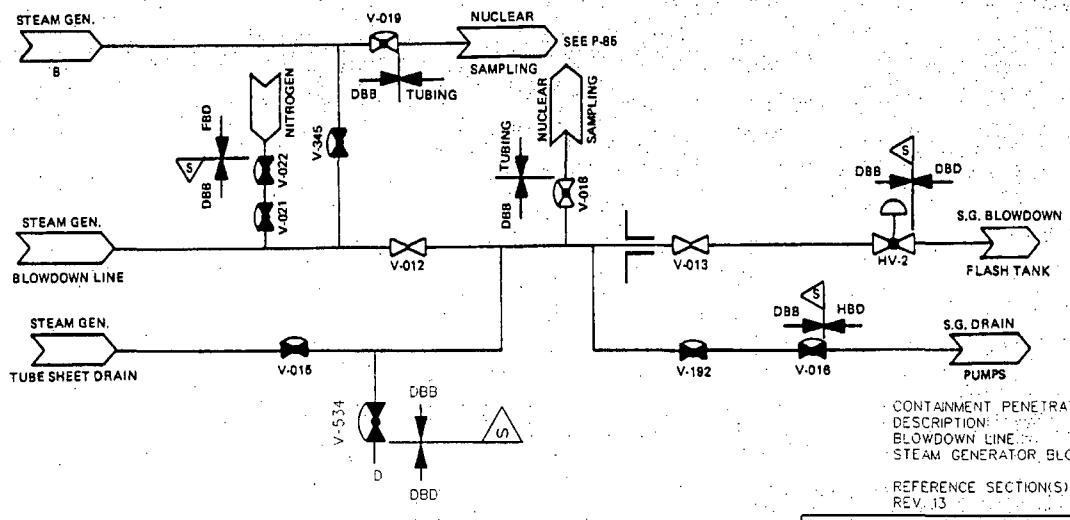

CONTAINMENT PENETRATION NO. P-11
DESCRIPTION:
BLOWDOWN LINE
STEAM GENERATOR BLOWDOWN SYSTEM

REFERENCE SECTION(S) 10.4.8
REV. 13

WOLF CREEK
UPDATED SAFETY ANALYSIS REPORT

CONTAINMENT PENETRATIONS
FIGURE 6.2.4-1
PAGE 11 OF 74

VALVE NO.	LINE/ VALVE SIZE, IN.	INSIDE/ OUTSIDE CONT.	NORMAL FLOW DIRECTION	VALVE TYPE	VALVE OPERATOR	POWER SOURCE	PRIMARY ACTUATION SIGNAL	SECONDARY ACTUATION SIGNAL	MAXIMUM CLOSURE TIME (SEC.)	VALVE POSITION					APPENDIX J REQUIREMENT
										NORMAL	SHUTDOWN	FAIL	PRIMARY	SECONDARY	

ASSOCIATED WITH A SAFETY FEATURES SYS: YES ☒ NO ☐

FLUID CONTAINED: WATER

LENGTH OF PIPING TO OUTERMOST ISOLATION VALVE: 6.8 FT

APPLICABLE GDC NO. NONE

GENERAL COMMENTS:

THE CONTAINMENT PENETRATIONS ASSOCIATED WITH THE STEAM GENERATORS ARE NOT SUBJECT TO GDC-57, SINCE THE CONTAINMENT BARRIER INTEGRITY IS NOT BREACHED. THE BOUNDARY OR BARRIER AGAINST FISSION PRODUCT LEAKAGE TO THE ENVIRONMENT IS THE INSIDE OF THE STEAM GENERATOR TUBES AND THE OUTSIDE OF THE LINES EMANATING FROM THE STEAM GENERATOR SHELLS.

THIS PENETRATION IS INCLUDED FOR FIGURE COMPLETENESS. NONE OF THE VALVES SHOWN ARE CONSIDERED CONTAINMENT ISOLATION VALVES.

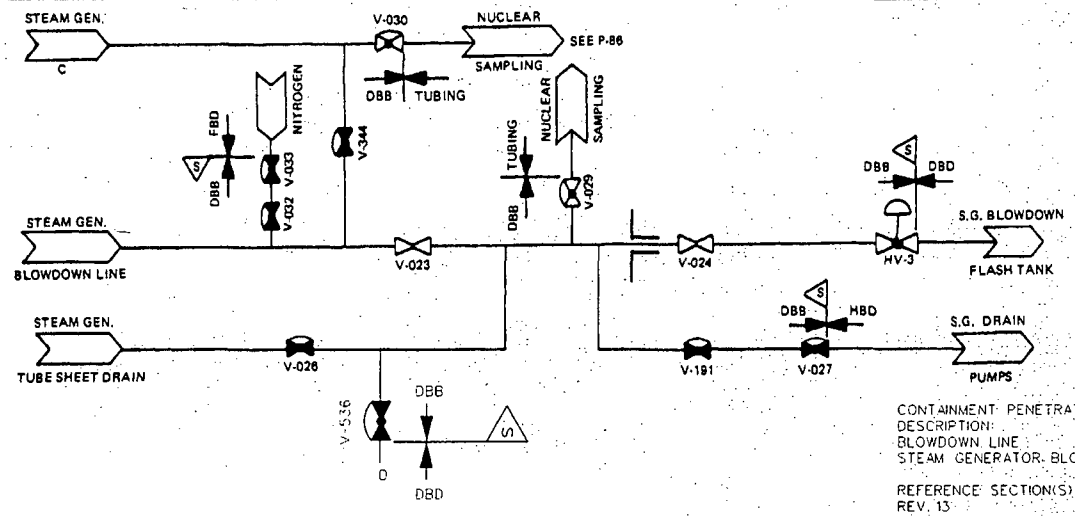

CONTAINMENT PENETRATION NO. P-12
DESCRIPTION:
BLOWDOWN LINE
STEAM GENERATOR BLOWDOWN SYSTEM

REFERENCE SECTION(S) 10.4.8
REV. 13

WOLF CREEK
UPDATED SAFETY ANALYSIS REPORT

CONTAINMENT PENETRATIONS
FIGURE 6.2.4-1
PAGE 12 OF 74

VALVE NO.	LINE/ VALVE SIZE, IN.	INSIDE/ OUTSIDE CONT.	NORMAL FLOW DIRECTION	VALVE TYPE	VALVE OPERATOR	POWER SOURCE	PRIMARY ACTUATION SIGNAL	SECONDARY ACTUATION SIGNAL	MAXIMUM CLOSURE TIME (SEC.)	VALVE POSITION					APPENDIX J REQUIREMENT
										NORMAL	SHUTDOWN	FAIL	PRIMARY	SECONDARY	
ENHV-07	12/12	OUTSIDE	OUT	GATE	MOTOR	4	CIS-A	REM/MAN	30	CLOSED	CLOSED	AS IS	CLOSED	OPEN	A

ASSOCIATED WITH A SAFETY FEATURES SYS.	YES [X] NO [ ]
FLUID CONTAINED:	WATER
LENGTH OF PIPING TO OUTERMOST ISOLATION VALVE:	N/A
APPLICABLE GDC NO.	56

GENERAL COMMENTS:

THIS PENETRATION IS ASSOCIATED WITH THE CONTAINMENT SPRAY SYSTEM, WHICH IS REQUIRED TO MITIGATE THE CONSEQUENCES OF A LOCA. A SINGLE REMOTE-MANUAL ISOLATION IS PROVIDED, LOCATED WITHIN A WATERTIGHT COMPARTMENT OUTSIDE THE CONTAINMENT, FOR GREATER SYSTEM RELIABILITY. A SINGLE ACTIVE OR PASSIVE FAILURE CAN BE ACCOMMODATED SINCE THE SYSTEM IS CLOSED OUTSIDE THE CONTAINMENT AND IS DESIGNED AND CONSTRUCTED COMMENSURATE WITH THE DESIGN AND CONSTRUCTION OF THE CONTAINMENT.

LOCAL TESTING OF THE VALVE OR THE CLOSED SYSTEM OUTSIDE THE CONTAINMENT IS NOT REQUIRED SINCE THE SYSTEM IS OPERATED AND INSPECTED DURING NORMAL PLANT OPERATION TO ASSURE THAT THE INTEGRITY IS BEING MAINTAINED.

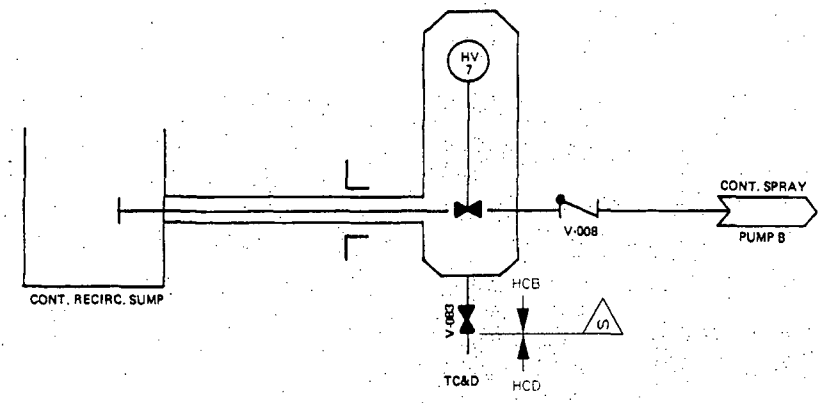

CONTAINMENT PENETRATION NO. P-13
DESCRIPTION:
RECIRCULATION LINE
CONTAINMENT SPRAY SYSTEM

REFERENCE SECTION(S) 6.2.2
REV. 13

WOLF CREEK
UPDATED SAFETY ANALYSIS REPORT

CONTAINMENT PENETRATIONS
FIGURE 6.2.4-1
PAGE 13 OF 74

VALVE NO.	LINE/ VALVE SIZE, IN.	INSIDE/ OUTSIDE CONT.	NORMAL FLOW DIRECTION	VALVE TYPE	VALVE OPERATOR	POWER SOURCE	PRIMARY ACTUATION SIGNAL	SECONDARY ACTUATION SIGNAL	MAXIMUM CLOSURE TIME (SEC.)	VALVE POSITION					APPENDIX J REQUIREMENT
										NORMAL	SHUTDOWN	FAIL	PRIMARY	SECONDARY	
EJHV-8811B	14/14	OUTSIDE	OUT	GATE	MOTOR	4	REM/MAN	SIS AND RWST-LO	N/A	CLOSED	CLOSED	AS IS	CLOSED	OPEN	A
EJHV-24	1/1	OUTSIDE	OUT	GATE	SOLENOID	4	NONE	REM/MAN	5	CLOSED	CLOSED	CLOSED	CLOSED	OPEN	C
EJHV-26	1/1	OUTSIDE	OUT	GLOBE	SOLENOID	4	NONE	REM/MAN	5	CLOSED	CLOSED	CLOSED	CLOSED	OPEN	C
EJV-189	1/1	OUTSIDE	N/A	GLOBE	MANUAL	N/A	N/A	N/A	N/A	CLOSED	CLOSED	N/A	CLOSED	N/A	N/A

ASSOCIATED WITH A SAFETY FEATURES SYS. YES [X] NO [ ]

FLUID CONTAINED: WATER

LENGTH OF PIPING TO OUTERMOST ISOLATION VALVE: N/A

APPLICABLE GDC NO. 56

GENERAL COMMENTS:

THIS PENETRATION IS ASSOCIATED WITH THE RHR SYSTEM AND THE POST-ACCIDENT SAMPLING SYSTEM (PASS). RHR IS REQUIRED TO MITIGATE THE CONSEQUENCES OF A LOCA. A SINGLE REMOTE-MANUAL ISOLATION IS PROVIDED, LOCATED WITHIN A WATERTIGHT COMPARTMENT OUTSIDE THE CONTAINMENT. FOR GREATER SYSTEM RELIABILITY, A SINGLE ACTIVE OR PASSIVE FAILURE CAN BE ACCOMMODATED SINCE THE SYSTEM IS CLOSED OUTSIDE THE CONTAINMENT AND IS DESIGNED AND CONSTRUCTED COMMENSURATE WITH THE DESIGN AND CONSTRUCTION OF THE CONTAINMENT.

LOCAL TESTING OF THE RHR VALVE OR THE CLOSED SYSTEM OUTSIDE THE CONTAINMENT IS NOT REQUIRED SINCE THE SYSTEM IS OPERATED AND INSPECTED DURING NORMAL PLANT OPERATION TO ASSURE THAT THE INTEGRITY IS BEING MAINTAINED.

THE PASS LINE IS PROVIDED WITH THREE SAFETY-RELATED VALVES WHICH MEET THE REQUIREMENTS FOR CONTAINMENT ISOLATION AND ARE PROVIDED WITH AN ISOLATION POWER LOCKOUT SWITCH IN THE CONTROL ROOM. CREDIT IS TAKEN ONLY FOR THE TWO VALVES OUTSIDE THE ENCAPSULATION TANK BECAUSE THE VALVE INSIDE THE TANK CANNOT BE TYPE C TESTED.

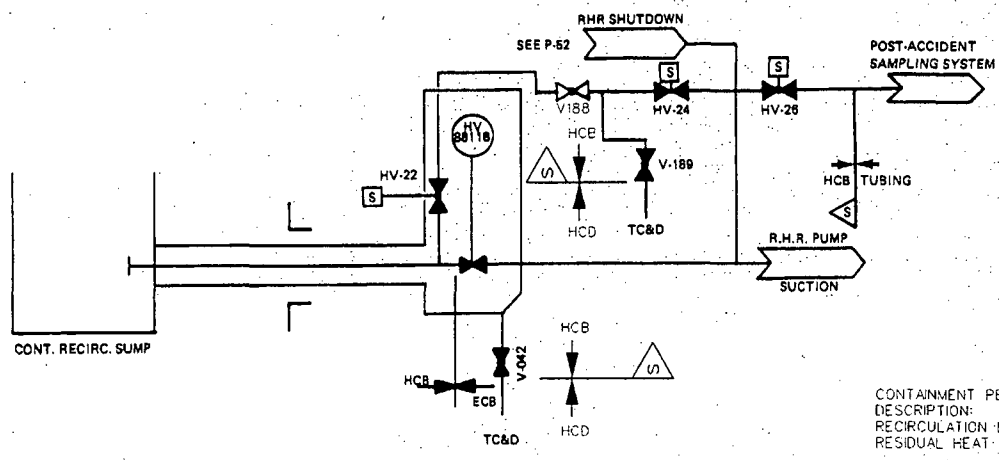

CONTAINMENT PENETRATION NO. P-14
DESCRIPTION:
RECIRCULATION LINE
RESIDUAL HEAT REMOVAL SYSTEM

REFERENCE SECTION(S) 5.4.7. & 6.3
REV. 13

WOLF CREEK
UPDATED SAFETY ANALYSIS REPORT

CONTAINMENT PENETRATIONS
FIGURE 6.2.4-1
PAGE 14 OF 74

VALVE NO.	LINE/ VALVE SIZE, IN.	INSIDE/ OUTSIDE CONT.	NORMAL FLOW DIRECTION	VALVE TYPE	VALVE OPERATOR	POWER SOURCE	PRIMARY ACTUATION SIGNAL	SECONDARY ACTUATION SIGNAL	MAXIMUM CLOSURE TIME (SEC.)	VALVE POSITION					APPENDIX J REQUIREMENT
										NORMAL	SHUTDOWN	FAIL	PRIMARY	SECONDARY	
EJHV-8811A	14/14	OUTSIDE	OUT	GATE	MOTOR	1	REM/MAN	SIS AND RWST-LO	N/A	CLOSED	CLOSED	AS IS	CLOSED	OPEN	A
EJHV-23	1/1	OUTSIDE	OUT	GATE	SOLENOID	1	NONE	REM/MAN	5	CLOSED	CLOSED	CLOSED	CLOSED	OPEN	C
EJHV-25	1/1	OUTSIDE	OUT	GATE	SOLENOID	1	NONE	REM/MAN	5	CLOSED	CLOSED	CLOSED	CLOSED	OPEN	C
EJV-187	1/1	OUTSIDE	N/A	GLOBE	MANUAL	N/A	N/A	N/A	N/A	CLOSED	CLOSED	N/A	CLOSED	N/A	N/A

ASSOCIATED WITH A SAFETY FEATURES SYS. YES [X] NO [ ]

FLUID CONTAINED: WATER

LENGTH OF PIPING TO OUTERMOST ISOLATION VALVE: N/A

APPLICABLE GDC NO. 56

GENERAL COMMENTS:

THIS PENETRATION IS ASSOCIATED WITH THE RHR SYSTEM AND THE POST-ACCIDENT *SAMPLING SYSTEM (PASS). RHR IS REQUIRED* TO MITIGATE THE CONSEQUENCES OF A LOCA. A SINGLE REMOTE-MANUAL ISOLATION IS PROVIDED, LOCATED WITHIN A WATERTIGHT COMPARTMENT OUTSIDE THE CONTAINMENT, FOR GREATER SYSTEM RELIABILITY. A SINGLE ACTIVE OR PASSIVE FAILURE CAN BE ACCOMMODATED SINCE THE SYSTEM IS CLOSED OUTSIDE THE CONTAINMENT AND IS DESIGNED AND CONSTRUCTED COMMENSURATE WITH THE DESIGN AND CONSTRUCTION OF THE CONTAINMENT.

LOCAL TESTING OF THE RHR VALVE OR THE CLOSED SYSTEM OUTSIDE THE CONTAINMENT IS NOT REQUIRED SINCE THE SYSTEM IS OPERATED AND INSPECTED DURING NORMAL PLANT OPERATION TO ASSURE THAT THE INTEGRITY IS BEING MAINTAINED.

THE PASS LINE IS PROVIDED WITH THREE SAFETY-RELATED VALVES WHICH MEET THE REQUIREMENTS FOR CONTAINMENT ISOLATION AND ARE PROVIDED WITH AN ISOLATION POWER LOCKOUT SWITCH IN THE CONTROL ROOM. CREDIT IS TAKEN ONLY FOR THE TWO VALVES OUTSIDE THE ENCAPSULATION TANK BECAUSE THE VALVE INSIDE THE TANK CANNOT BE TYPE C TESTED.

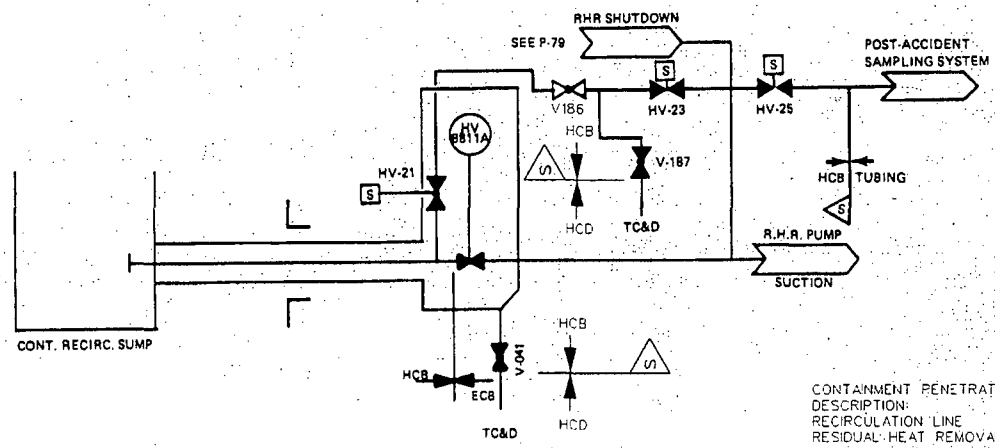

CONTAINMENT PENETRATION NO. P-15
DESCRIPTION:
RECIRCULATION LINE
RESIDUAL HEAT REMOVAL SYSTEM

REFERENCE SECTION(S) 5.4.7 & 6.3
REV. 13

WOLF CREEK
UPDATED SAFETY ANALYSIS REPORT

CONTAINMENT PENETRATIONS
FIGURE 6.2.4-1
PAGE 15 OF 74

VALVE NO.	LINE/ VALVE SIZE, IN.	INSIDE/ OUTSIDE CONT.	NORMAL FLOW DIRECTION	VALVE TYPE	VALVE OPERATOR	POWER SOURCE	PRIMARY ACTUATION SIGNAL	SECONDARY ACTUATION SIGNAL	MAXIMUM CLOSURE TIME (SEC.)	VALVE POSITION					APPENDIX J REQUIREMENT
										NORMAL	SHUTDOWN	FAIL	PRIMARY	SECONDARY	
ENHV-01	12/12	OUTSIDE	OUT	GATE	MOTOR	1	CIS-A	REM/MAN	30	CLOSED	CLOSED	AS IS	CLOSED	OPEN	A

ASSOCIATED WITH A SAFETY FEATURES SYS. YES [X] NO [ ]

FLUID CONTAINED: WATER

LENGTH OF PIPING TO OUTERMOST ISOLATION VALVE: N/A

APPLICABLE GDC NO. 56

GENERAL COMMENTS:

THIS PENETRATION IS ASSOCIATED WITH THE CONTAINMENT SPRAY SYSTEM, WHICH IS REQUIRED TO MITIGATE THE CONSEQUENCES OF A LOCA. A SINGLE REMOTE-MANUAL ISOLATION IS PROVIDED, LOCATED WITHIN A WATERTIGHT COMPARTMENT OUTSIDE THE CONTAINMENT, FOR GREATER SYSTEM RELIABILITY. A SINGLE ACTIVE OR PASSIVE FAILURE CAN BE ACCOMMODATED SINCE THE SYSTEM IS CLOSED OUTSIDE THE CONTAINMENT AND IS DESIGNED AND CONSTRUCTED COMMENSURATE WITH THE DESIGN AND CONSTRUCTION OF THE CONTAINMENT.

LOCAL TESTING OF THE VALVE OR THE CLOSED SYSTEM OUTSIDE THE CONTAINMENT IS NOT REQUIRED SINCE THE SYSTEM IS OPERATED AND INSPECTED DURING NORMAL PLANT OPERATION TO ASSURE THAT THE INTEGRITY IS BEING MAINTAINED.

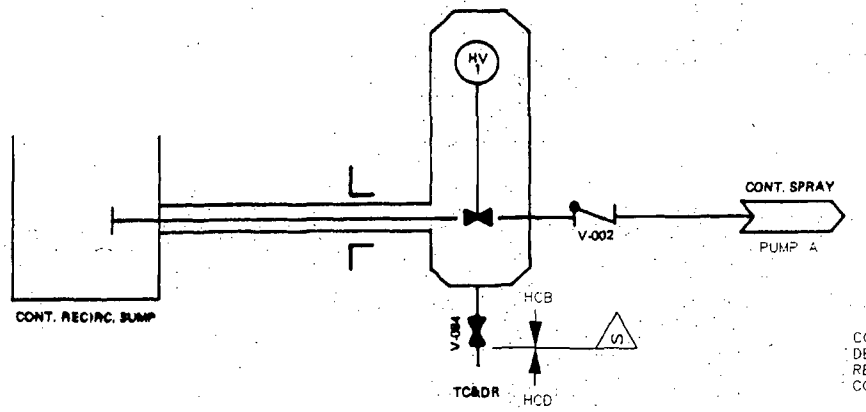

CONTAINMENT PENETRATION NO. P-16
DESCRIPTION:
RECIRCULATION LINE
CONTAINMENT SPRAY SYSYTEM

REFERENCE SECTION(S) 6.2.2
REV. 13

WOLF CREEK
UPDATED SAFETY ANALYSIS REPORT

CONTAINMENT PENETRATIONS
FIGURE 6.2.4-1
PAGE 16 OF 74

VALVE NO.	LINE/ VALVE SIZE, IN.	INSIDE/ OUTSIDE CONT.	NORMAL FLOW DIRECTION	VALVE TYPE	VALVE OPERATOR	POWER SOURCE	PRIMARY ACTUATION SIGNAL	SECONDARY ACTUATION SIGNAL	MAXIMUM CLOSURE TIME (SEC.)	VALVE POSITION					APPENDIX J REQUIREMENT
										NORMAL	SHUTDOWN	FAIL	PRIMARY	SECONDARY	
EJHCV-8825	3/4/3/4	INSIDE	IN	GLOBE	AIR	1	CIS-A	NONE	10	CLOSED	CLOSED	CLOSED	CLOSED	N/A	A
EJHV-8840	10/10	OUTSIDE	IN	GATE	MOTOR	4	NONE	REM/MAN	15	CLOSED	CLOSED	AS IS	CLOSED	OPEN	A
EJV-056	1/1	OUTSIDE	N/A	GLOBE	MANUAL	N/A	N/A	N/A	N/A	CLOSED	CLOSED	N/A	CLOSED	N/A	N/A
EJV-124	1/1	INSIDE	N/A	GLOBE	MANUAL	N/A	N/A	N/A	N/A	CLOSED	CLOSED	N/A	CLOSED	N/A	N/A
EJV-122	3/4	INSIDE	N/A	GLOBE	MANUAL	N/A	N/A	N/A	N/A	CLOSED	CLOSED	N/A	CLOSED	N/A	N/A
EJV-118,120	1/1	INSIDE	N/A	GLOBE	MANUAL	N/A	N/A	N/A	N/A	CLOSED	CLOSED	N/A	CLOSED	N/A	N/A
EJV-175,6,7,8	3/4/3/4	INSIDE	N/A	GLOBE	MANUAL	N/A	N/A	N/A	N/A	CLOSED	CLOSED	N/A	CLOSED		N/A
EJ-8841A	6/6	INSIDE	IN	CHECK	N/A	N/A	N/A	N/A	N/A	CLOSED	CLOSED	N/A	CLOSED	OPEN	A
EJ-8841B	6/6	INSIDE	IN	CHECK	N/A	N/A	N/A	N/A	N/A	CLOSED	CLOSED	N/A	CLOSED	OPEN	A

ASSOCIATED WITH A SAFETY FEATURES SYS. YES [X] NO [ ]

FLUID CONTAINED: WATER

LENGTH OF PIPING TO OUTERMOST ISOLATION VALVE: N/A

APPLICABLE GDC NO. 55

GENERAL COMMENTS:

THIS PENETRATION IS ASSOCIATED WITH THE RESIDUAL HEAT REMOVAL SYSTEM, WHICH IS REQUIRED TO MITIGATE THE CONSEQUENCES OF A LOCA. A CHECK VALVE IS PROVIDED FOR EACH BRANCH LINE INSIDE THE CONTAINMENT, AND A REMOTE-MANUAL ISOLATION VALVE IS PROVIDED OUTSIDE THE CONTAINMENT. A SINGLE ACTIVE OR PASSIVE FAILURE CAN BE ACCOMMODATED SINCE THE SYSTEM IS CLOSED OUTSIDE THE CONTAINMENT AND IS DESIGNED AND CONSTRUCTED COMMENSURATE WITH THE DESIGN AND CONSTRUCTION OF THE CONTAINMENT. LEAKAGE DETECTION FROM THIS LINE OUTSIDE THE CONTAINMENT IS PROVIDED, AS DESCRIBED IN SECTION 9.3.3.

LOCAL TESTING OF THE VALVES OR THE CLOSED SYSTEM OUTSIDE THE CONTAINMENT IS NOT REQUIRED SINCE THE SYSTEM IS OPERATED AND INSPECTED DURING NORMAL PLANT OPERATION TO ASSURE THAT THE INTEGRITY IS BEING MAINTAINED.

NOTE: ALL VENTS, DRAINS AND FLOW POINTS AS INDICATED BELOW.

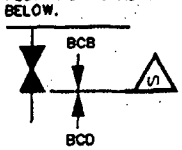

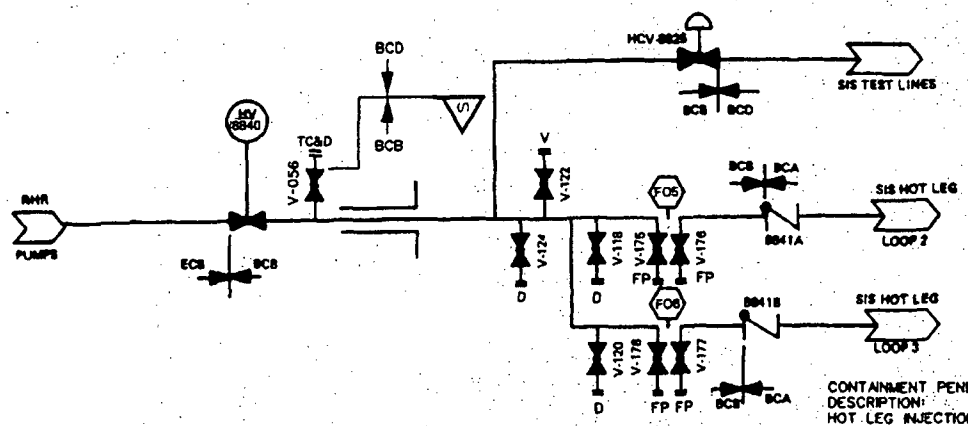

CONTAINMENT PENETRATION NO. P-21
DESCRIPTION:
HOT LEG INJECTION
RESIDUAL HEAT REMOVAL SYSTEM

REFERENCE SECTION(S) 5.4.7/6.3
REV. 13

WOLF CREEK
UPDATED SAFETY ANALYSIS REPORT

CONTAINMENT PENETRATIONS
FIGURE 6.2.4-1
PAGE 17 OF 74

VALVE NO.	LINE/ VALVE SIZE, IN.	INSIDE/ OUTSIDE CONT.	NORMAL FLOW DIRECTION	VALVE TYPE	VALVE OPERATOR	POWER SOURCE	PRIMARY ACTUATION SIGNAL	SECONDARY ACTUATION SIGNAL	MAXIMUM CLOSURE TIME (SEC.)	VALVE POSITION					APPENDIX J REQUIREMENT
										NORMAL	SHUTDOWN	FAIL	PRIMARY	SECONDARY	
BBHV-8351B	2/2	OUTSIDE	IN	GLOBE	MOTOR	4	NONE	REM/MAN	N/A	OPEN	OPEN	AS IS	OPEN	CLOSED	C
BBV-354	1/1	OUTSIDE	N/A	GLOBE	MANUAL	N/A	N/A	N/A	N/A	CLOSED	CLOSED	N/A	CLOSED	N/A	N/A
BBV-246	¾/¾	OUTSIDE	N/A	GLOBE	MANUAL	N/A	N/A	N/A	N/A	CLOSED	CLOSED	N/A	CLOSED	N/A	N/A
BBV148	2/2	INSIDE	IN	CHECK	N/A	N/A	N/A	N/A	N/A	OPEN	OPEN	N/A	OPEN	CLOSED	C

ASSOCIATED WITH A SAFETY FEATURES SYS. YES ☐ NO ☒

FLUID CONTAINED: WATER

LENGTH OF PIPING TO OUTERMOST ISOLATION VALVE: 11.7ft.

APPLICABLE GDC NO. 55

GENERAL COMMENTS:

THIS PENETRATION PIPING HAS A HIGH PRESSURE WATER INFLOW WHICH PRECLUDES THE NEED FOR AUTOMATIC ISOLATION OF THIS PENETRATION. THE CVCS CHARGING PUMPS SUPPLY REACTOR COOLANT PUMP SEAL INJECTION WATER, AND THERE IS A POTENTIAL FOR DAMAGE TO THE REACTOR COOLANT PUMP IF UNDESIRED ISOLATION SHOULD OCCUR.

THE ISOLATION CAN BE AFFECTED BY REMOTE-MANUAL CLOSURE OF THE MOTOR-OPERATED VALVE BY THE OPERATOR PRIOR TO THE CHARGING PUMPS COMPLETING THEIR SAFETY FUNCTION.

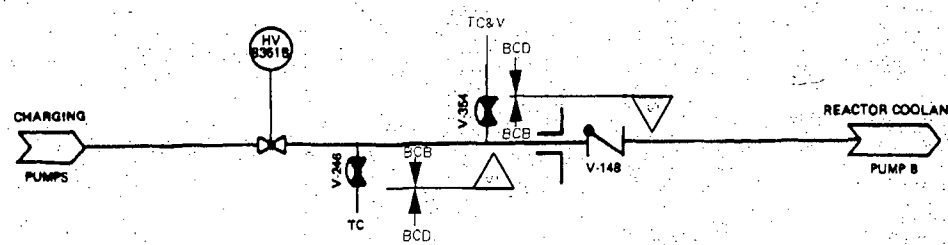

CONTAINMENT PENETRATION NO. P-22
DESCRIPTION:
RCP SEAL WATER SUPPLY
REACTOR COOLANT SYSTEM

REFERENCE SECTION(S) 5.0
REV. 13

WOLF CREEK
UPDATED SAFETY ANALYSIS REPORT

CONTAINMENT PENETRATIONS
FIGURE 6.2.4-1
PAGE 18 OF 74

VALVE NO.	LINE/ VALVE SIZE, IN.	INSIDE/ OUTSIDE CONT.	NORMAL FLOW DIRECTION	VALVE TYPE	VALVE OPERATOR	POWER SOURCE	PRIMARY ACTUATION SIGNAL	SECONDARY ACTUATION SIGNAL	MAXIMUM CLOSURE TIME (SEC.)	VALVE POSITION					APPENDIX J REQUIREMENT
										NORMAL	SHUTDOWN	FAIL	PRIMARY	SECONDARY	
BGHV-8160	3/3	INSIDE	OUT	GLOBE	AIR	1	CIS-A	NONE	10	OPEN	OPEN	CLOSED	CLOSED	N/A	C
BGV-363	1/1	OUTSIDE	N/A	GLOBE	MANUAL	N/A	N/A	NONE	N/A	CLOSED	CLOSED	N/A	CLOSED	N/A	N/A
BGHV-8152	3/3	OUTSIDE	OUT	GLOBE	AIR	4	CIS-A	NONE	10	OPEN	OPEN	CLOSED	CLOSED	N/A	C

ASSOCIATED WITH A SAFETY FEATURES SYS. YES ☐ NO ☒

FLUID CONTAINED: WATER

LENGTH OF PIPING TO OUTERMOST ISOLATION VALVE: 11.6ft

APPLICABLE GDC NO. 55

GENERAL COMMENTS:

NONE

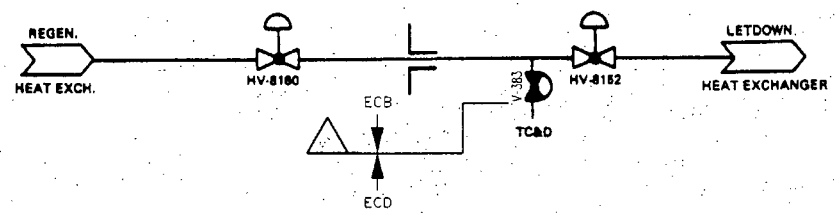

CONTAINMENT PENETRATION NO. P-23
DESCRIPTION:
NORMAL LETDOWN
CHEMICAL & VOLUME CONTROL SYSTEM

REFERENCE SECTION(S) 9.3.4
REV. 13

WOLF CREEK
UPDATED SAFETY ANALYSIS REPORT

CONTAINMENT PENETRATIONS
FIGURE 6.2.4-1
PAGE 19 OF 74

VALVE NO.	LINE/ VALVE SIZE, IN.	INSIDE/ OUTSIDE CONT.	NORMAL FLOW DIRECTION	VALVE TYPE	VALVE OPERATOR	POWER SOURCE	PRIMARY ACTUATION SIGNAL	SECONDARY ACTUATION SIGNAL	MAXIMUM CLOSURE TIME (SEC.)	VALVE POSITION					APPENDIX J REQUIREMENT
										NORMAL	SHUTDOWN	FAIL	PRIMARY	SECONDARY	
BGHV-8112	2/2	INSIDE	OUT	GLOBE	MOTOR	1	CIS-A	NONE	10	OPEN	OPEN	AS IS	CLOSED	N/A	C
BGV-135	¾/¾	INSIDE	IN	CHECK	N/A	N/A	N/A	N/A	N/A	CLOSED	CLOSED	N/A	CLOSED	N/A	C
BGHV-8100	2/2	OUTSIDE	OUT	GLOBE	MOTOR	4	CIS-A	NONE	10	OPEN	OPEN	AS IS	CLOSED	N/A	C
BGV-457	1/1	OUTSIDE	N/A	GLOBE	MANUAL	N/A	N/A	N/A	N/A	CLOSED	CLOSED	N/A	CLOSED	N/A	N/A

ASSOCIATED WITH A SAFETY FEATURES SYS. YES ☐ NO ☒

FLUID CONTAINED: WATER

LENGTH OF PIPING TO OUTERMOST ISOLATION VALVE: 12.6ft

APPLICABLE GDC NO. 55

GENERAL COMMENTS:

NONE

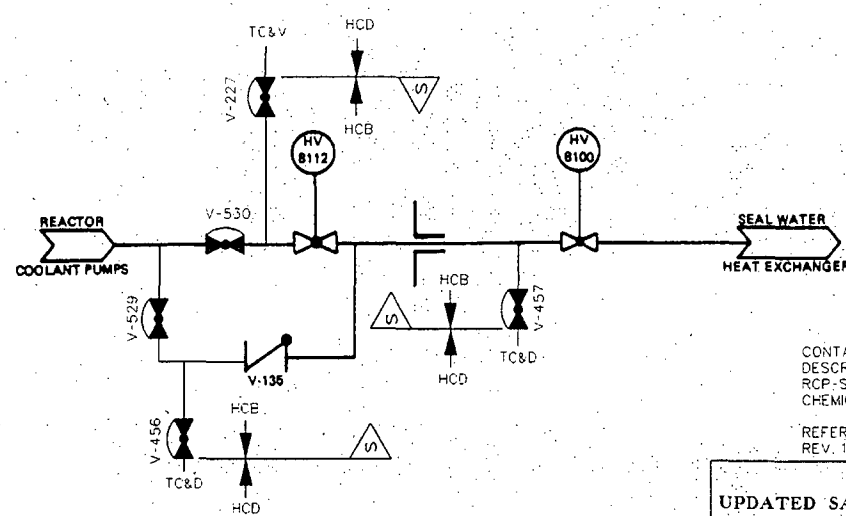

CONTAINMENT PENETRATION NO. P-24
DESCRIPTION:
RCP-SEAL WATER RETURN
CHEMICAL & VOLUME CONTROL SYSTEM

REFERENCE SECTION(S) 9.3.4
REV. 13

WOLF CREEK
UPDATED SAFETY ANALYSIS REPORT

CONTAINMENT PENETRATIONS
FIGURE 6.2.4-1
PAGE 20 OF 74

VALVE NO	LINE/ VALVE SIZE, IN.	INSIDE/ OUTSIDE CONT.	NORMAL FLOW DIRECTION	VALVE TYPE	VALVE OPERATOR	POWER SOURCE	PRIMARY ACTUATION SIGNAL	SECONDARY ACTUATION SIGNAL	MAXIMUM CLOSURE TIME (SEC.)	VALVE POSITION					APPENDIX J REQUIREMENT
										NORMAL	SHUTDOWN	FAIL	PRIMARY	SECONDARY	
BLHV-8047	3/3	OUTSIDE	IN	DIAPHRAGM	AIR	4	CIS-A	NONE	10	OPEN	OPEN	CLOSED	CLOSED	N/A	C
BLV-054	1/1	OUTSIDE	N/A	GLOBE	MANUAL	N/A	N/A	N/A	N/A	CLOSED	CLOSED	N/A	CLOSED	N/A	N/A
BL-8046	3/3	INSIDE	IN	CHECK	N/A	N/A	N/A	N/A	N/A	OPEN	OPEN	N/A	CLOSED	N/A	C

ASSOCIATED WITH A SAFETY FEATURES SYS. YES ☐ NO ☒

FLUID CONTAINED: WATER

LENGTH OF PIPING TO OUTERMOST ISOLATION VALVE: 12.2ft

APPLICABLE GDC NO. 56

GENERAL COMMENTS:

NONE

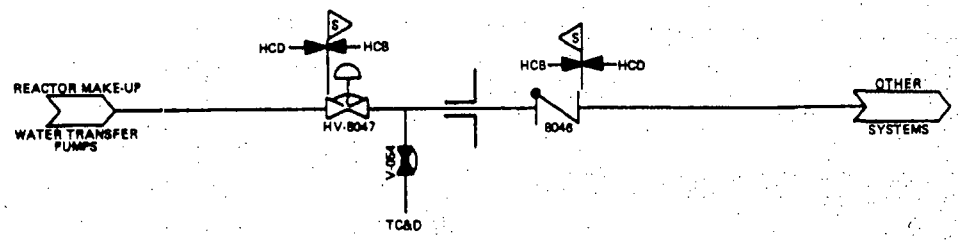

CONTAINMENT PENETRATION NO. P-25
DESCRIPTION:
REACTOR MAKEUP WATER
REACTOR MAKEUP WATER SYSTEM

REFERENCE SECTION(S) 9.2.7
REV. 11

WOLF CREEK
UPDATED SAFETY ANALYSIS REPORT

CONTAINMENT PENETRATIONS
FIGURE 6.2.4-1
PAGE 21 OF 74

VALVE NO.	LINE/ VALVE SIZE, IN.	INSIDE/ OUTSIDE CONT.	NORMAL FLOW DIRECTION	VALVE TYPE	VALVE OPERATOR	POWER SOURCE	PRIMARY ACTUATION SIGNAL	SECONDARY ACTUATION SIGNAL	MAXIMUM CLOSURE TIME (SEC.)	VALVE POSITION					APPENDIX J REQUIREMENT
										NORMAL	SHUTDOWN	FAIL	PRIMARY	SECONDARY	
HBHV-7176	3/3	INSIDE	OUT	DIAPHRAGM	AIR	1	CIS-A	NONE	10	OPEN	OPEN	CLOSED	CLOSED	N/A	C
HBHV-7136	3/3	OUTSIDE	OUT	DIAPHRAGM	AIR	4	CIS-A	NONE	10	OPEN	OPEN	CLOSED	CLOSED	N/A	C
HBV-419	1/1	OUTSIDE	N/A	GLOBE	MANUAL	N/A	N/A	N/A	N/A	CLOSED	CLOSED	N/A	CLOSED	N/A	N/A

ASSOCIATED WITH A SAFETY FEATURES SYS. YES ☐ NO ☒

FLUID CONTAINED: WATER

LENGTH OF PIPING TO OUTERMOST ISOLATION VALVE: 11.9ft

APPLICABLE GDC NO. 56

GENERAL COMMENTS:

NONE

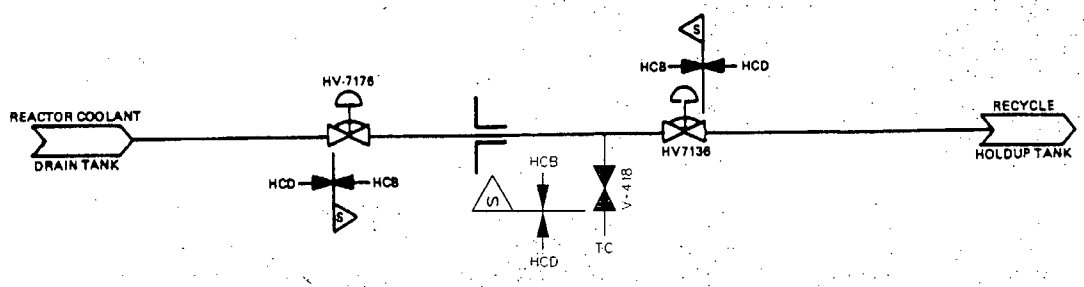

CONTAINMENT PENETRATION NO P-26
DESCRIPTION:
REACTOR COOLANT DRAIN TANK DISCHARGE
LIQUID RADWASTE SYSTEM
REFERENCE SECTION(S) 11.2
REV. 13

WOLF CREEK
UPDATED SAFETY ANALYSIS REPORT

CONTAINMENT PENETRATIONS
FIGURE 6.2.4-1
PAGE 22 OF 74

VALVE NO.	LINE/ VALVE SIZE, IN.	INSIDE/ OUTSIDE CONT.	NORMAL FLOW DIRECTION	VALVE TYPE	VALVE OPERATOR	POWER SOURCE	PRIMARY ACTUATION SIGNAL	SECONDARY ACTUATION SIGNAL	MAXIMUM CLOSURE TIME (SEC.)	VALVE POSITION					APPENDIX J REQUIREMENT
										NORMAL	SHUTDOWN	FAIL	PRIMARY	SECONDARY	
EJHV-8809B	10/10	OUTSIDE	IN	GATE	MOTOR	4	NONE	REM/MAN	N/A	OPEN	OPEN	AS IS	OPEN	CLOSED	A
EJV-058	1/1	OUTSIDE	N/A	GLOBE	MANUAL	N/A	N/A	N/A	N/A	CLOSED	CLOSED	N/A	CLOSED	N/A	N/A
EJHCV-8890B	¾/¾	INSIDE	IN	GLOBE	AIR	4	CIS-A	NONE	13	CLOSED	CLOSED	CLOSED	CLOSED	N/A	A
EJV-086	1/1	INSIDE	N/A	GLOBE	MANUAL	N/A	N/A	N/A	N/A	CLOSED	CLOSED	N/A	CLOSED	N/A	N/A
EJV-088,090	¾/¾	INSIDE	N/A	GLOBE	MANUAL	N/A	N/A	N/A	N/A	CLOSED	CLOSED	N/A	CLOSED	N/A	N/A
EP-8818C	6/6	INSIDE	IN	CHECK	N/A	N/A	N/A	N/A	N/A	CLOSED	OPEN	N/A	OPEN	CLOSED	A
EJV-179,180,181,182	¾/¾	INSIDE	N/A	GLOBE	MANUAL	N/A	N/A	N/A	N/A	CLOSED	CLOSED	N/A	CLOSED	N/A	N/A
EP-8818D	6/6	INSIDE	IN	CHECK	N/A	N/A	N/A	N/A	N/A	CLOSED	OPEN	N/A	OPEN	CLOSED	A
EJV-166	¾/¾	INSIDE	N/A	GLOBE	MANUAL	N/A	N/A	N/A	N/A	CLOSED	CLOSED	N/A	CLOSED	N/A	N/A

ASSOCIATED WITH A SAFETY FEATURES SYS. YES [X] NO [ ]

FLUID CONTAINED: WATER

LENGTH OF PIPING TO OUTERMOST ISOLATION VALVE: N/A

APPLICABLE GDC NO. 55

GENERAL COMMENTS:

THIS PENETRATION IS ASSOCIATED WITH THE RESIDUAL HEAT REMOVAL SYSTEM, WHICH IS REQUIRED TO MITIGATE THE CONSEQUENCES OF A LOCA. A CHECK VALVE IS PROVIDED FOR EACH BRANCH LINE INSIDE THE CONTAINMENT, AND A REMOTE-MANUAL ISOLATION VALVE IS PROVIDED OUTSIDE THE CONTAINMENT. A SINGLE ACTIVE OR PASSIVE FAILURE CAN BE ACCOMMODATED SINCE THE SYSTEM IS CLOSED OUTSIDE THE CONTAINMENT AND IS DESIGNED AND CONSTRUCTED COMMENSURATE WITH THE DESIGN AND CONSTRUCTION OF THE CONTAINMENT.

LOCAL TESTING OF THE VALVE OR THE CLOSED SYSTEM OUTSIDE THE CONTAINMENT IS NOT REQUIRED SINCE THE SYSTEM IS OPERATED AND INSPECTED DURING NORMAL PLANT OPERATION TO ASSURE THAT THE INTEGRITY IS BEING MAINTAINED.

NOTE: ALL VENTS, DRAINS AND FLOW POINTS AS INDICATED BELOW.

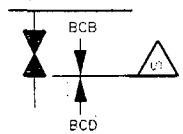

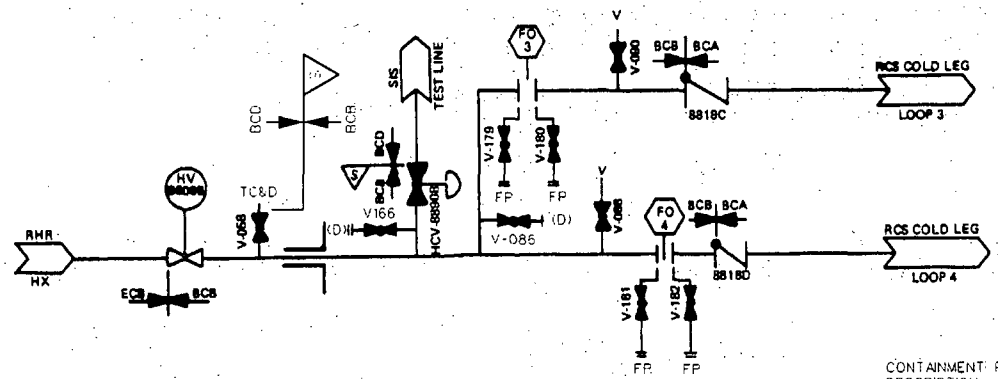

CONTAINMENT PENETRATION NO. P-27
DESCRIPTION:
COLD LEG INJECTION
RESIDUAL HEAT REMOVAL SYSTEM

REFERENCE SECTION(S) 5.4.7 & 6.3
REV. 13

WOLF CREEK
UPDATED SAFETY ANALYSIS REPORT

CONTAINMENT PENETRATIONS
FIGURE 6.2.4-1
PAGE 23 OF 74

VALVE NO.	LINE/ VALVE SIZE, IN.	INSIDE/ OUTSIDE CONT.	NORMAL FLOW DIRECTION	VALVE TYPE	VALVE OPERATOR	POWER SOURCE	PRIMARY ACTUATION SIGNAL	SECONDARY ACTUATION SIGNAL	MAXIMUM CLOSURE TIME (SEC.)	VALVE POSITION					APPENDIX J REQUIREMENT
										NORMAL	SHUTDOWN	FAIL	PRIMARY	SECONDARY	
EFHV-32	14/14	OUTSIDE	IN	BUTTERFLY	MOTOR	4	SIS	REM/MAN	N/A	OPEN	OPEN	AS IS	OPEN	CLOSED	C
EFHV-34	14/14	INSIDE	IN	BUTTERFLY	MOTOR	4	SIS	REM/MAN	N/A	OPEN	OPEN	AS IS	OPEN	CLOSED	C
EFV-278	1/1	INSIDE	N/A	GATE	MANUAL	N/A	N/A	N/A	N/A	CLOSED	CLOSED	N/A	CLOSED	N/A	N/A

ASSOCIATED WITH A SAFETY FEATURES SYS. YES [X] NO [ ]

FLUID CONTAINED: WATER

LENGTH OF PIPING TO OUTERMOST ISOLATION VALVE: 17.2ft

APPLICABLE GDC NO. 56

GENERAL COMMENTS:

THIS PENETRATION IS ASSOCIATED WITH THE ESSENTIAL SERVICE WATER SYSTEM, WHICH IS REQUIRED TO MITIGATE THE CONSEQUENCES OF A LOCA. A REMOTE-MANUAL POWER-OPERATED VALVE IS LOCATED INSIDE, AND A REMOTE-MANUAL POWER-OPERATED VALVE IS LOCATED OUTSIDE THE CONTAINMENT.

THESE VALVES ARE POWERED FROM THE SAME POWER SOURCE FOR GREATER SYSTEM RELIABILITY. A SINGLE ACTIVE OR PASSIVE FAILURE CAN BE ACCOMMODATED SINCE THE SYSTEM IS A CLOSED SYSTEM INSIDE THE CONTAINMENT, WHICH IS DESIGNED AND CONSTRUCTED IN ACCORDANCE WITH ASME SECTION III, CLASS 3 REQUIREMENTS. THE ESSENTIAL SERVICE WATER LINES ARE NOT VENTED OR DRAINED DURING A TYPE A TEST SINCE THE AIR COOLERS MAY BE REQUIRED TO COOL THE CONTAINMENT. A TYPE C TEST IS PERFORMED.

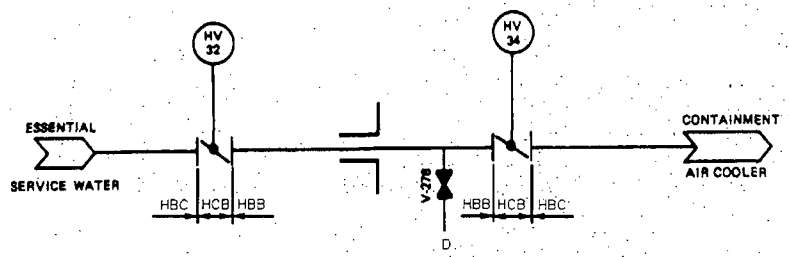

CONTAINMENT PENETRATION NO. P-28
DESCRIPTION:
ESW TO CONTAINMENT AIR COOLER
ESSENTIAL SERVICE WATER SYSTEM

REFERENCE SECTION(S) 6.2.2
REV. 13

WOLF CREEK
UPDATED SAFETY ANALYSIS REPORT

CONTAINMENT PENETRATIONS
FIGURE 6.2.4-1
PAGE 24 OF 74

VALVE NO.	LINE/ VALVE SIZE, IN.	INSIDE/ OUTSIDE CONT.	NORMAL FLOW DIRECTION	VALVE TYPE	VALVE OPERATOR	POWER SOURCE	PRIMARY ACTUATION SIGNAL	SECONDARY ACTUATION SIGNAL	MAXIMUM CLOSURE TIME (SEC.)	VALVE POSITION					APPENDIX J REQUIREMENT
										NORMAL	SHUTDOWN	FAIL	PRIMARY	SECONDARY	
EFHV-46	14/14	INSIDE	OUT	BUTTERFLY	MOTOR	4	SIS	REM/MAN	N/A	OPEN	OPEN	AS IS	OPEN	CLOSED	C
EFV-279	1/1	INSIDE	N/A	GATE	MANUAL	N/A	N/A	N/A	N/A	CLOSED	CLOSED	N/A	CLOSED	N/A	N/A
EFHV-50	14/14	OUTSIDE	OUT	BUTTERFLY	MOTOR	4	SIS	REM/MAN	N/A	OPEN	OPEN	AS IS	OPEN	CLOSED	C

ASSOCIATED WITH A SAFETY FEATURES SYS. YES [X] NO [ ]

FLUID CONTAINED: WATER

LENGTH OF PIPING TO OUTERMOST ISOLATION VALVE: N/A

APPLICABLE GDC NO. 56

GENERAL COMMENTS:

THIS PENETRATION IS ASSOCIATED WITH THE ESSENTIAL SERVICE WATER SYSTEM, WHICH IS REQUIRED TO MITIGATE THE CONSEQUENCES OF A LOCA. A REMOTE-MANUAL POWER-OPERATED VALVE IS LOCATED INSIDE AND A REMOTE-MANUAL POWER-OPERATED VALVE IS LOCATED OUTSIDE THE CONTAINMENT.

THESE VALVES ARE POWERED FROM THE SAME POWER SOURCE FOR GREATER SYSTEM RELIABILITY. A SINGLE ACTIVE OR PASSIVE FAILURE CAN BE ACCOMMODATED SINCE THE SYSTEM IS A CLOSED SYSTEM INSIDE THE CONTAINMENT, WHICH IS DESIGNED AND CONSTRUCTED IN ACCORDANCE WITH ASME SECTION III, CLASS 3 REQUIREMENTS.

THE ESSENTIAL SERVICE WATER LINES ARE NOT VENTED OR DRAINED DURING A TYPE A TEST SINCE THE AIR COOLERS MAY BE REQUIRED TO COOL THE CONTAINMENT. A TYPE C TEST IS PERFORMED.

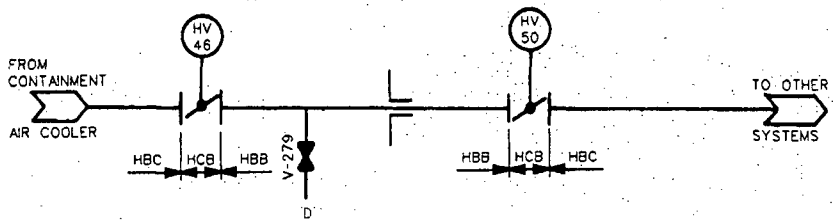

CONTAINMENT PENETRATION NO. P-29
DESCRIPTION:
ESW FROM CONTAINMENT AIR COOLERS
ESSENTIAL SERVICE WATER SYSTEM

REFERENCE SECTION(S) 6.2.2
REV. 13

WOLF CREEK
UPDATED SAFETY ANALYSIS REPORT

CONTAINMENT PENETRATIONS
FIGURE 6.2.4-1
PAGE 25 OF 74

VALVE NO.	LINE/ VALVE SIZE, IN.	INSIDE/ OUTSIDE CONT.	NORMAL FLOW DIRECTION	VALVE TYPE	VALVE OPERATOR	POWER SOURCE	PRIMARY ACTUATION SIGNAL	SECONDARY ACTUATION SIGNAL	MAXIMUM CLOSURE TIME (SEC.)	VALVE POSITION					APPENDIX J REQUIREMENT
										NORMAL	SHUTDOWN	FAIL	PRIMARY	SECONDARY	
KAFV-29	1½/2	OUTSIDE	IN	GLOBE	AIR	1	CIS-A	REM/MAN	5	OPEN	OPEN	CLOSED	CLOSED	OPEN	C
KAV-218	1½/1½	OUTSIDE	N/A	GLOBE	MANUAL	N/A	N/A	N/A	N/A	CLOSED	CLOSED	N/A	CLOSED	N/A	N/A
KAV-204	1½/1½	INSIDE	IN	CHECK	N/A	N/A	N/A	N/A	N/A	OPEN	OPEN	N/A	CLOSED	OPEN	C

ASSOCIATED WITH A SAFETY FEATURES SYS. YES ☐ NO ☒

FLUID CONTAINED: AIR

LENGTH OF PIPING TO OUTERMOST ISOLATION VALVE: 7.9ft

APPLICABLE GDC NO. 56

GENERAL COMMENTS:

NONE

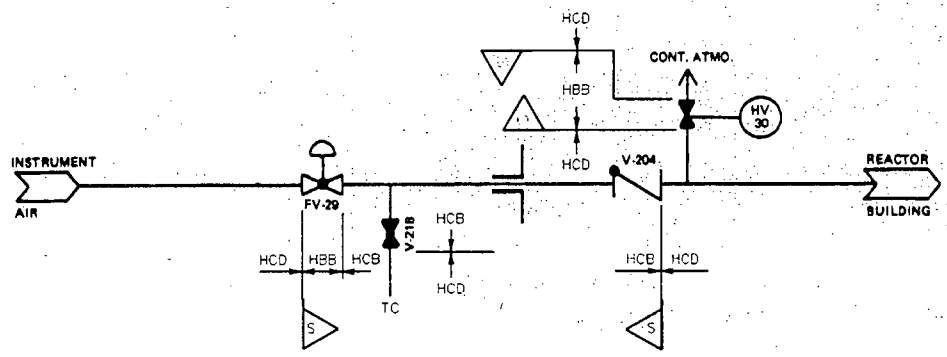

CONTAINMENT PENETRATION NO. P-30
DESCRIPTION:
INST. AIR AND H_2 CONTROL MAKEUP AIR COMPRESSED AIR SYSTEM

REFERENCE SECTION(S) 9.3.1
REV. 13

WOLF CREEK
UPDATED SAFETY ANALYSIS REPORT

CONTAINMENT PENETRATIONS
FIGURE 6.2.4-1
PAGE 26 OF 74

VALVE NO.	LINE/ VALVE SIZE, IN.	INSIDE/ OUTSIDE CONT.	NORMAL FLOW DIRECTION	VALVE TYPE	VALVE OPERATOR	POWER SOURCE	PRIMARY ACTUATION SIGNAL	SECONDARY ACTUATION SIGNAL	MAXIMUM CLOSURE TIME (SEC.)	VALVE POSITION					APPENDIX J REQUIREMENT
										NORMAL	SHUTDOWN	FAIL	PRIMARY	SECONDARY	
LFFV-95	6/6	INSIDE	OUT	GATE	MOTOR	1	CIS-A	NONE	30	OPEN	OPEN	AS IS	CLOSED	N/A	C
LFFV-96	6/6	OUTSIDE	OUT	GLOBE	AIR	4	CIS-A	NONE	4	SEE NOTES	SEE NOTES	CLOSED	CLOSED	N/A	C
LFV-093	1/1	OUTSIDE	N/A	GLOBE	MANUAL	N/A	N/A	N/A	N/A	CLOSED	CLOSED	N/A	CLOSED	N/A	N/A

ASSOCIATED WITH A SAFETY FEATURES SYS.: YES ☐ NO ☒

FLUID CONTAINED: WATER

LENGTH OF PIPING TO OUTERMOST ISOLATION VALVE: 18.3ft

APPLICABLE CDC NO. 56

GENERAL COMMENTS:

VALVE FV-96 OPENS ONLY WHEN ONE OF THE CONTAINMENT SUMP PUMPS ARE OPERATING. THE CONTROL GRADE SIGNAL TO OPEN THE VALVE IS NEGATED WHEN A PROTECTION GRADE CIS-A SIGNAL IS IS RECEIVED

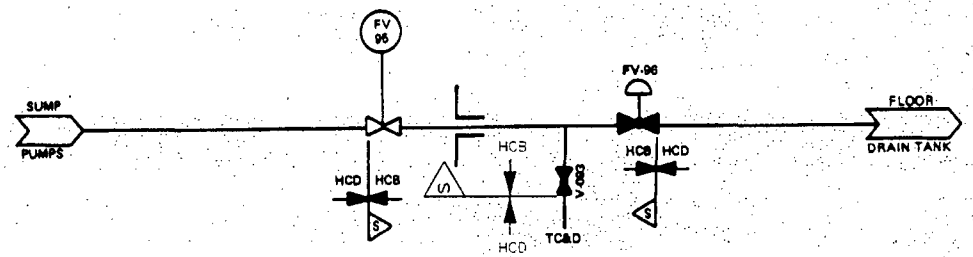

CONTAINMENT PENETRATION NO. P-32
DESCRIPTION:
CONTAINMENT SUMP PUMP DISCHARGE
FLOOR AND EQUIPMENT DRAINAGE SYSTEM

REFERENCE SECTION(S) 9.3.3
REV. 13

WOLF CREEK
UPDATED SAFETY ANALYSIS REPORT

CONTAINMENT PENETRATIONS
FIGURE 6.2.4-1
PAGE 27 OF 74

VALVE NO.	LINE/ VALVE SIZE, IN.	INSIDE/ OUTSIDE CONT.	NORMAL FLOW DIRECTION	VALVE TYPE	VALVE OPERATOR	POWER SOURCE	PRIMARY ACTUATION SIGNAL	SECONDARY ACTUATION SIGNAL	MAXIMUM CLOSURE TIME (SEC.)	VALVE POSITION					APPENDIX J REQUIREMENT
										NORMAL	SHUTDOWN	FAIL	PRIMARY	SECONDARY	
GPV-010	1/1	OUTSIDE	N/A	GLOBE	MANUAL	N/A	N/A	N/A	N/A	CLOSED	CLOSED	N/A	CLOSED	N/A	N/A
FLANGES	6/6	BOTH	N/A	N/A	N/A	N/A	N/A	N/A	N/A	N/A	N/A	N/A	N/A	N/A	B

ASSOCIATED WITH A SAFETY FEATURES SYS. YES ☐ NO ☒

FLUID CONTAINED: AIR

LENGTH OF PIPING TO OUTERMOST ISOLATION VALVE: N/A

APPLICABLE GDC NO. 56

GENERAL COMMENTS:

FLANGES ARE REMOVED ONLY DURING PERFORMANCE OF TYPE A TEST

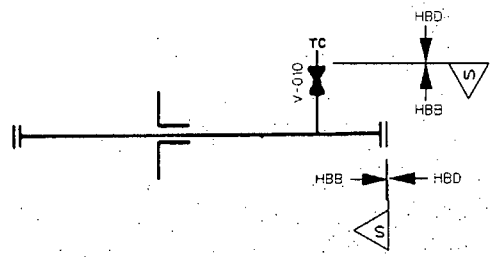

CONTAINMENT PENETRATION NO. P-34
DESCRIPTION:
CONTAINMENT PRESSURIZATION LINE
ILRT PRESSURIZATION SYSTEM

REFERENCE SECTION(S) 6.2.6
REV. 13

WOLF CREEK
UPDATED SAFETY ANALYSIS REPORT

CONTAINMENT PENETRATIONS
FIGURE 6.2.4-1
PAGE 28 OF 74

VALVE NO.	LINE/ VALVE SIZE, IN.	INSIDE/ OUTSIDE CONT.	NORMAL FLOW DIRECTION.	VALVE TYPE	VALVE OPERATOR	POWER SOURCE	PRIMARY ACTUATION SIGNAL	SECONDARY ACTUATION SIGNAL	MAXIMUM CLOSURE TIME (SEC.)	VALVE POSITION					APPENDIX J REQUIREMENT
										NORMAL	SHUTDOWN	FAIL	PRIMARY	SECONDARY	
BBHV-8351C	2/2	OUTSIDE	IN	GLOBE	MOTOR	4	NONE	REM/MAN	N/A	OPEN	OPEN	AS IS	OPEN	CLOSED	C
BBV-356	1/1	OUTSIDE	N/A	GLOBE	MANUAL	N/A	N/A	N/A	N/A	CLOSED	CLOSED	N/A	CLOSED	N/A	N/A
BBV-247	¾/ ¾	OUTSIDE	N/A	GLOBE	MANUAL	N/A	N/A	N/A	N/A	CLOSED	CLOSED	N/A	CLOSED	N/A	N/A
BBV-178	2/2	INSIDE	IN	CHECK	N/A	N/A	N/A	N/A	N/A	OPEN	OPEN	N/A	OPEN	CLOSED	C

ASSOCIATED WITH A SAFETY FEATURES SYS. YES ☐ NO ☒

FLUID CONTAINED: WATER

LENGTH OF PIPING TO OUTERMOST ISOLATION VALVE: 17.5

APPLICABLE GDC NO. 55

GENERAL COMMENTS:

THIS PENETRATION PIPING HAS A HIGH PRESSURE WATER INFLOW WHICH PRECLUDES THE NEED FOR AUTOMATIC ISOLATION OF THIS PENETRATION. THE CVCS CHARGING PUMPS SUPPLY REACTOR COOLANT PUMP SEAL INJECTION WATER, AND THERE IS A POTENTIAL FOR DAMAGE TO THE REACTOR COOLANT PUMP IF UNDESIRED ISOLATION SHOULD OCCUR.

THE ISOLATION CAN BE AFFECTED BY REMOTE-MANUAL CLOSURE OF THE MOTOR-OPERATED VALVE BY THE OPERATOR PRIOR TO THE CHARGING PUMPS COMPLETING THEIR SAFETY FUNCTION.

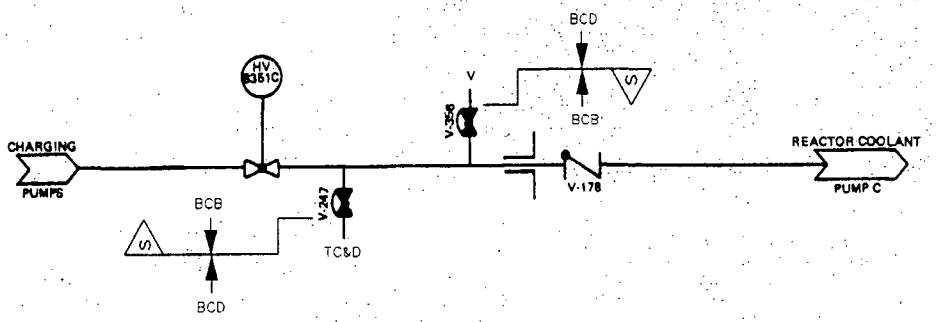

CONTAINMENT PENETRATION NO. P-39
DESCRIPTION:
RCP - SEAL WATER SUPPLY
REACTOR COOLANT SYSTEM

REFERENCE SECTION(S) 5.0
REV. 13

WOLF CREEK
UPDATED SAFETY ANALYSIS REPORT

CONTAINMENT PENETRATIONS
FIGURE 6.2.4-1
PAGE 29 OF 74

VALVE NO.	LINE/ VALVE SIZE, IN.	INSIDE/ OUTSIDE CONT.	NORMAL FLOW DIRECTION	VALVE TYPE	VALVE OPERATOR	POWER SOURCE	PRIMARY ACTUATION SIGNAL	SECONDARY ACTUATION SIGNAL	MAXIMUM CLOSURE TIME (SEC.)	VALVE POSITION					APPENDIX J REQUIREMENT
										NORMAL	SHUTDOWN	FAIL	PRIMARY	SECONDARY	
BBHV-8351D	2/2	OUTSIDE	IN	GLOBE	MOTOR	4	NONE	REM/MAN	N/A	OPEN	OPEN	AS IS	OPEN	CLOSED	C
BBV-358	1/1	OUTSIDE	N/A	GLOBE	MANUAL	N/A	N/A	N/A	N/A	CLOSED	CLOSED	N/A	CLOSED	N/A	N/A
BBV-248	3/4/ 3/4	OUTSIDE	N/A	GLOBE	MANUAL	N/A	N/A	N/A	N/A	CLOSED	CLOSED	N/A	CLOSED	N/A	N/A
BBV-208	2/2	INSIDE	IN	CHECK	N/A	N/A	N/A	N/A	N/A	OPEN	OPEN	N/A	OPEN	CLOSED	C

ASSOCIATED WITH A SAFETY FEATURES SYS. YES ☐ NO ☒

FLUID CONTAINED: WATER

LENGTH OF PIPING TO OUTERMOST ISOLATION VALVE: 17.5ft

APPLICABLE GDC NO. 55

GENERAL COMMENTS:

THIS PENETRATION PIPING HAS A HIGH PRESSURE WATER INFLOW WHICH PRECLUDES THE NEED FOR AUTOMATIC ISOLATION OF THIS PENETRATION. THE CVCS CHARGING PUMPS SUPPLY REACTOR COOLANT PUMP SEAL INJECTION WATER, AND THERE IS A POTENTIAL FOR DAMAGE TO THE REACTOR COOLANT PUMP IF UNDESIRED ISOLATION SHOULD OCCUR.

THE ISOLATION CAN BE AFFECTED BY REMOTE-MANUAL CLOSURE OF THE MOTOR-OPERATED VALVE BY THE OPERATOR PRIOR TO THE CHARGING PUMPS COMPLETING THEIR SAFETY FUNCTION.

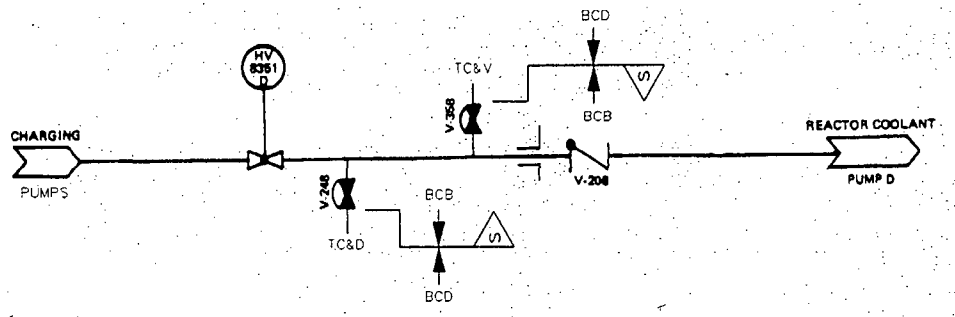

CONTAINMENT PENETRATION NO. P-40
DESCRIPTION:
RCP - SEAL WATER SUPPLY
REACTOR COOLANT SYSTEM

REFERENCE SECTION(S) 5.0
REV. 13

WOLF CREEK
UPDATED SAFETY ANALYSIS REPORT

CONTAINMENT PENETRATIONS
FIGURE 6.2.4-1
PAGE 30 OF 74

VALVE NO.	LINE/ VALVE SIZE, IN.	INSIDE/ OUTSIDE CONT.	NORMAL FLOW DIRECTION	VALVE TYPE	VALVE OPERATOR	POWER SOURCE	PRIMARY ACTUATION SIGNAL	SECONDARY ACTUATION SIGNAL	MAXIMUM CLOSURE TIME (SEC.)	VALVE POSITION					APPENDIX J. REQUIREMENT
										NORMAL	SHUTDOWN	FAIL	PRIMARY	SECONDARY	
BBHV-8351A	2/2	OUTSIDE	IN	GLOBE	MOTOR	4	NONE	REM/MAN	N/A	OPEN	OPEN	AS IS	OPEN	CLOSED	C
BBV-352	1/1	OUTSIDE	N/A	GLOBE	MANUAL	N/A	N/A	N/A	N/A	CLOSED	CLOSED	N/A	CLOSED	N/A	N/A
BBV-245	¾/ ¾	OUTSIDE	N/A	GLOBE	MANUAL	N/A	N/A	N/A	N/A	CLOSED	CLOSED	N/A	CLOSED	N/A	N/A
BBV-118	2/2	INSIDE	IN	CHECK	N/A	N/A	N/A	N/A	N/A	OPEN	OPEN	N/A	OPEN	CLOSED	C

ASSOCIATED WITH A SAFETY FEATURES. SYS. YES ☐ NO ☒

FLUID CONTAINED: WATER

LENGTH OF PIPING TO OUTERMOST ISOLATION VALVE: 20.0ft

APPLICABLE GDC NO. 55

GENERAL COMMENTS:

THIS PENETRATION PIPING HAS A HIGH PRESSURE WATER INFLOW WHICH PRECLUDES THE NEED FOR AUTOMATIC ISOLATION OF THIS PENETRATION. THE CVCS CHARGING PUMPS SUPPLY REACTOR COOLANT PUMP SEAL INJECTION WATER, AND THERE IS A POTENTIAL FOR DAMAGE TO THE REACTOR COOLANT PUMP IF UNDESIRED ISOLATION SHOULD OCCUR.

THE ISOLATION CAN BE AFFECTED BY REMOTE-MANUAL CLOSURE OF THE MOTOR-OPERATED VALVE BY THE OPERATOR PRIOR TO THE CHARGING PUMPS COMPLETING THEIR SAFETY FUNCTION.

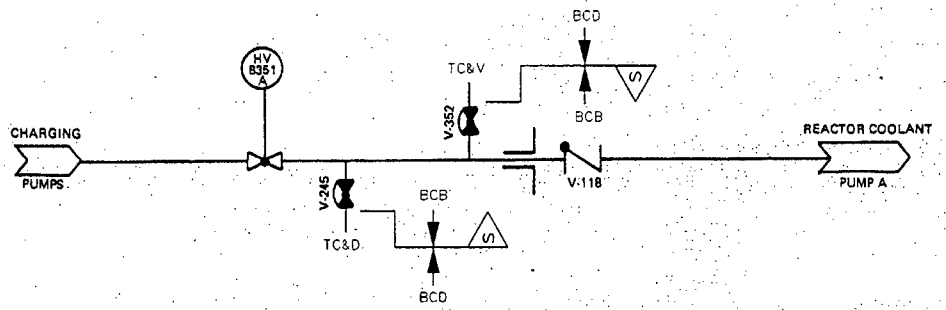

CONTAINMENT PENETRATION NO. P-41
DESCRIPTION:
RCP - SEAL WATER SUPPLY
REACTOR COOLANT SYSTEM

REFERENCE SECTION(S) 5.0
REV. 13

WOLF CREEK
UPDATED SAFETY ANALYSIS REPORT

CONTAINMENT PENETRATIONS
FIGURE 6.2.4-1
PAGE 31 OF 74

VALVE NO.	LINE/ VALVE SIZE, IN.	INSIDE/ OUTSIDE CONT.	NORMAL FLOW DIRECTION	VALVE TYPE	VALVE OPERATOR	POWER SOURCE	PRIMARY ACTUATION SIGNAL	SECONDARY ACTUATION SIGNAL	MAXIMUM CLOSURE TIME (SEC.)	VALVE POSITION					APPENDIX J REQUIREMENT
										NORMAL	SHUTDOWN	FAIL	PRIMARY	SECONDARY	
HDV-016	2/2	OUTSIDE	IN	GLOBE	MANUAL	N/A	N/A	N/A	N/A	CLOSED	CLOSED	N/A	CLOSED	N/A	C
HDV-023	1/1	OUTSIDE	N/A	GLOBE	MANUAL	N/A	N/A	N/A	N/A	CLOSED	N/A	N/A	CLOSED	N/A	N/A
HDV-017	2/2	INSIDE	IN	GLOBE	MANUAL	N/A	N/A	N/A	N/A	CLOSED	CLOSED	N/A	CLOSED	N/A	C

ASSOCIATED WITH A SAFETY FEATURES SYS. YES ☐ NO ☒

FLUID CONTAINED: STEAM

LENGTH OF PIPING TO OUTERMOST ISOLATION VALVE: 14.9ft

APPLICABLE GDC NO. 56

GENERAL COMMENTS:

NONE

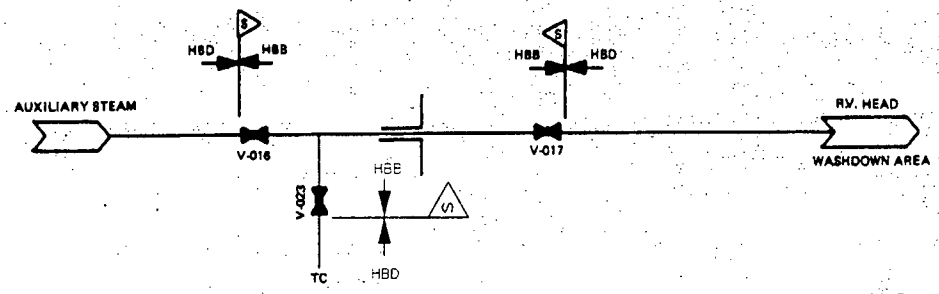

CONTAINMENT PENETRATION NO. P-43
DESCRIPTION:
DECONTAMINATION STEAM
DECONTAMINATION SYSTEM

REFERENCE SECTION(S) 12.3
REV. 13

WOLF CREEK
UPDATED SAFETY ANALYSIS REPORT

CONTAINMENT PENETRATIONS
FIGURE 6.2.4-1
PAGE 32 OF 74

VALVE NO.	LINE/ VALVE SIZE, IN.	INSIDE/ OUTSIDE CONT.	NORMAL FLOW DIRECTION	VALVE TYPE	VALVE OPERATOR	POWER SOURCE	PRIMARY ACTUATION SIGNAL	SECONDARY ACTUATION SIGNAL	MAXIMUM CLOSURE TIME (SEC.)	VALVE POSITION					APPENDIX J REQUIREMENT
										NORMAL	SHUTDOWN	FAIL	PRIMARY	SECONDARY	
HBHV-7126	3/4/ 3/4	INSIDE	OUT	DIAPHRAGM	AIR	1	CIS-A	NONE	10	OPEN	OPEN	CLOSED	CLOSED	N/A	C
HBHV-7150	3/4/ 3/4	OUTSIDE	OUT	DIAPHRAGM	AIR	4	CIS-A	NONE	10	OPEN	OPEN	CLOSED	CLOSED	N/A	C
HBV-420	3/4/ 3/4	OUTSIDE	N/A	GLOBE	MANUAL	N/A	N/A	N/A	N/A	CLOSED	CLOSED	N/A	CLOSED	N/A	N/A

ASSOCIATED WITH A SAFETY FEATURES SYS. YES ☐ NO ☒

FLUID CONTAINED: GAS

LENGTH OF PIPING TO OUTERMOST ISOLATION VALVE: 12.3ft

APPLICABLE GDC NO. 56

GENERAL COMMENTS:

NONE

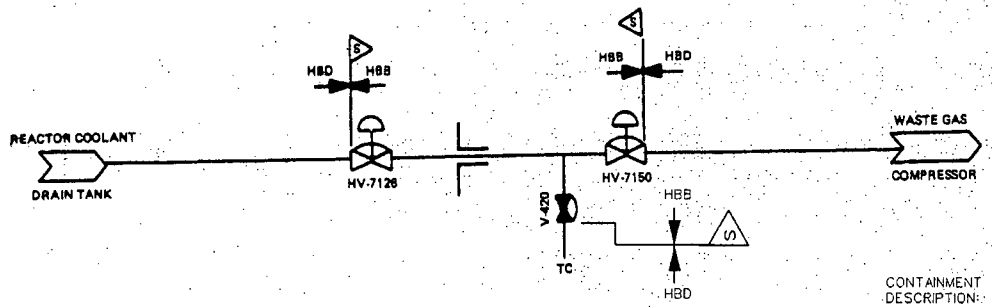

CONTAINMENT PENETRATION NO. P-44
DESCRIPTION:
R.C.D. TANK VENT LINE
LIQUID RADWASTE SYSTEM

REFERENCE SECTION(S) 11.2
REV. 13

WOLF CREEK
UPDATED SAFETY ANALYSIS REPORT

CONTAINMENT PENETRATIONS
FIGURE 6.2.4-1
PAGE 33 OF 74

VALVE NO.	LINE/ VALVE SIZE, IN.	INSIDE/ OUTSIDE CONT.	NORMAL FLOW DIRECTION	VALVE TYPE	VALVE OPERATOR	POWER SOURCE	PRIMARY ACTUATION SIGNAL	SECONDARY ACTUATION SIGNAL	MAXIMUM CLOSURE TIME (SEC.)	VALVE POSITION					APPENDIX J REQUIREMENT
										NORMAL	SHUTDOWN	FAIL	PRIMARY	SECONDARY	
EPV-046	1/1	INSIDE	IN	CHECK	N/A	N/A	N/A	N/A	N/A	CLOSED	CLOSED	N/A	CLOSED	N/A	C
EPV-043	¾ / ¾	OUTSIDE	N/A	GLOBE	MANUAL	N/A	N/A	N/A	N/A	CLOSED	CLOSED	N/A	CLOSED	N/A	N/A
EPHV-8880	1/1	OUTSIDE	IN	GLOBE	AIR	4	CIS-A	NONE	10	CLOSED	CLOSED	CLOSED	CLOSED	N/A	C

ASSOCIATED WITH A SAFETY FEATURES SYS. YES ☐ NO ☒

FLUID CONTAINED: GAS

LENGTH OF PIPING TO OUTERMOST ISOLATION VALVE: 13.0ft

APPLICABLE CDC NO. 56

GENERAL COMMENTS:

NONE

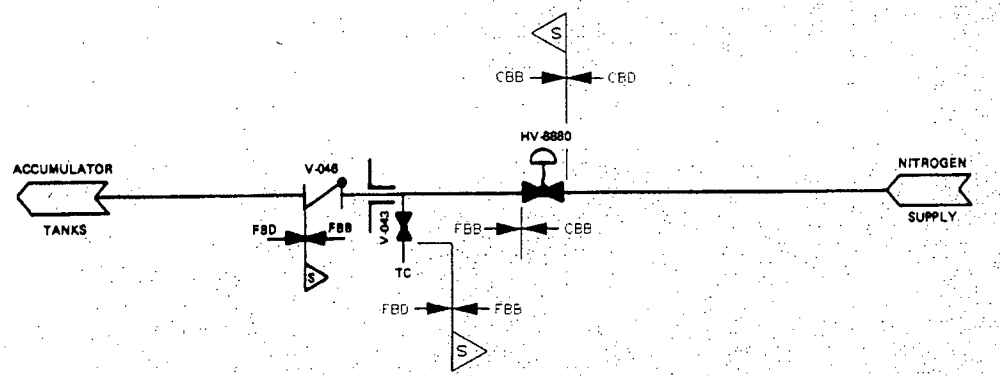

CONTAINMENT PENETRATION NO. P-45
DESCRIPTION:
NITROGEN SUPPLY LINE
ACCUMULATOR SAFETY INJECTION SYSTEM

REFERENCE SECTION(S).6.3.
REV. 13

WOLF CREEK
UPDATED SAFETY ANALYSIS REPORT

CONTAINMENT PENETRATIONS
FIGURE 6.2.4-1
PAGE 34 OF 74

VALVE NO.	LINE/ VALVE SIZE, IN.	INSIDE/ OUTSIDE CONT.	NORMAL FLOW DIRECTION	VALVE TYPE	VALVE OPERATOR	POWER SOURCE	PRIMARY ACTUATION SIGNAL	SECONDARY ACTUATION SIGNAL	MAXIMUM CLOSURE TIME (SEC.)	VALVE POSITION					APPENDIX J REQUIREMENT
										NORMAL	SHUTDOWN	FAIL	PRIMARY	SECONDARY	
EMHV-8802B	4/4	OUTSIDE	IN	GATE	MOTOR	4	NONE	REM/MAN	N/A	CLOSED	CLOSED	AS IS	CLOSED	OPEN	A
EMHV-8824	¾/ ¾	INSIDE	OUT	GLOBE	AIR	1	CIS-A	NONE	10	CLOSED	CLOSED	CLOSED	CLOSED	N/A	A
EMV-003	2/2	INSIDE	IN	CHECK	N/A	N/A	N/A	N/A	N/A	CLOSED	CLOSED	N/A	CLOSED	OPEN	A
EMV-004	2/2	INSIDE	IN	CHECK	N/A	N/A	N/A	N/A	N/A	CLOSED	CLOSED	N/A	CLOSED	OPEN	A
EMV-060,061, 063, 064 EMV-217, 169	¾/ ¾	INSIDE	N/A	GLOBE	MANUAL	N/A	N/A	N/A	N/A	CLOSED	CLOSED	N/A	CLOSED	N/A	N/A
EMV-170, 172	1/1	INSIDE	N/A	GLOBE	MANUAL	N/A	N/A	N/A	N/A	CLOSED	CLOSED	N/A	CLOSED	N/A	N/A
EMV-059	1/1	OUTSIDE	N/A	GLOBE	MANUAL	N/A	N/A	N/A	N/A	CLOSED	CLOSED	N/A	CLOSED	N/A	N/A

ASSOCIATED WITH A SAFETY FEATURES SYS. YES ☒ NO ☐

FLUID CONTAINED: WATER

LENGTH OF PIPING TO OUTERMOST ISOLATION VALVE: N/A

APPLICABLE GDC NO. 55

GENERAL COMMENTS:

THIS PENETRATION IS ASSOCIATED WITH THE HIGH PRESSURE COOLANT INJECTION SYSTEM, WHICH IS REQUIRED TO MITIGATE THE CONSEQUENCES OF A LOCA. A CHECK VALVE IS PROVIDED FOR EACH BRANCH LINE INSIDE THE CONTAINMENT, AND A REMOTE-MANUAL ISOLATION VALVE IS PROVIDED OUTSIDE THE CONTAINMENT. A SINGLE ACTIVE OR PASSIVE FAILURE CAN BE ACCOMMODATED SINCE THE SYSTEM IS CLOSED OUTSIDE THE CONTAINMENT AND IS DESIGNED AND CONSTRUCTED COMMENSURATE WITH THE DESIGN AND CONSTRUCTION OF THE CONTAINMENT. LEAKAGE DETECTION FROM THIS LINE OUTSIDE THE CONTAINMENT IS PROVIDED, AS DESCRIBED IN SECTION 9.3.3.

LOCAL TESTING OF THE VALVES OR THE CLOSED SYSTEM OUTSIDE THE CONTAINMENT IS NOT REQUIRED SINCE THE SYSTEM IS OPERATED AND INSPECTED DURING NORMAL PLANT OPERATION TO ASSURE THAT THE INTEGRITY IS BEING MAINTAINED.

NOTE: ALL VENTS, DRAINS AND FLOW POINTS AS INDICATED BELOW.

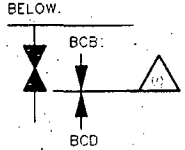

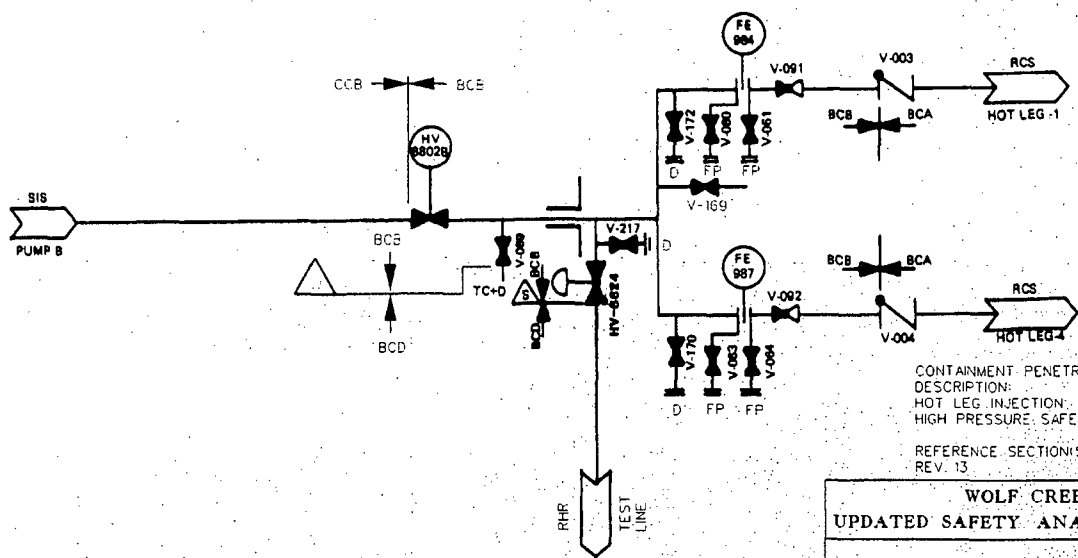

CONTAINMENT PENETRATION NO. P-48
DESCRIPTION:
HOT LEG INJECTION
HIGH PRESSURE SAFETY INJECTION SYSTEM

REFERENCE SECTION(S): 6.3
REV. 13

WOLF CREEK
UPDATED SAFETY ANALYSIS REPORT

CONTAINMENT PENETRATIONS
FIGURE 6.2.4-1
PAGE 35 OF 74

VALVE NO.	LINE/ VALVE SIZE, IN.	INSIDE/ OUTSIDE CONT.	NORMAL FLOW DIRECTION	VALVE TYPE	VALVE OPERATOR	POWER SOURCE	PRIMARY ACTUATION SIGNAL	SECONDARY ACTUATION SIGNAL	MAXIMUM CLOSURE TIME (SEC.)	VALVE POSITION					APPENDIX J REQUIREMENT
										NORMAL	SHUTDOWN	FAIL	PRIMARY	SECONDARY	
EMHV-8835	4/4	OUTSIDE	IN	GATE	MOTOR	4	NONE	REM/MAN	N/A	OPEN	OPEN	AS IS	OPEN	CLOSED	A
EMHV-8823	3/4-3/4	INSIDE	OUT	GLOBE	AIR	1	CIS-A	NONE	10	CLOSED	CLOSED	CLOSED	CLOSED	N/A	A
EPV-020	2/2	INSIDE	IN	CHECK	N/A	N/A	N/A	N/A	N/A	CLOSED	CLOSED	N/A	OPEN	CLOSED	A
EPV-010	2/2	INSIDE	IN	CHECK	N/A	N/A	N/A	N/A	N/A	CLOSED	CLOSED	N/A	OPEN	CLOSED	A
EPV-040	2/2	INSIDE	IN	CHECK	N/A	N/A	N/A	N/A	N/A	CLOSED	CLOSED	N/A	OPEN	CLOSED	A
EPV-030	2/2	INSIDE	IN	CHECK	N/A	N/A	N/A	N/A	N/A	CLOSED	CLOSED	N/A	OPEN	CLOSED	A
EMV-067	1/1	OUTSIDE	N/A	GLOBE	MANUAL	N/A	N/A	N/A	N/A	CLOSED	CLOSED	N/A	CLOSED	N/A	N/A
EMV-068 thru EMV-075	3/4-3/4	INSIDE	N/A	GLOBE	MANUAL	N/A	N/A	N/A	N/A	CLOSED	CLOSED	N/A	CLOSED	N/A	N/A
EMV-216 EMV162 thru 168	1/1	INSIDE	N/A	GLOBE	MANUAL	N/A	N/A	N/A	N/A	CLOSED	CLOSED	N/A	CLOSED	N/A	N/A

14

ASSOCIATED WITH A SAFETY FEATURES SYS. YES [X] NO [ ]

FLUID CONTAINED: WATER

LENGTH OF PIPING TO OUTERMOST ISOLATION VALVE: N/A

APPLICABLE GDC NO. 55

GENERAL COMMENTS:

THIS PENETRATION IS ASSOCIATED WITH THE HIGH PRESSURE COOLANT INJECTION SYSTEM, WHICH IS REQUIRED TO MITIGATE THE CONSEQUENCES OF A LOCA. A CHECK VALVE IS PROVIDED FOR EACH BRANCH LINE INSIDE THE CONTAINMENT AND A REMOTE-MANUAL ISOLATION VALVE IS PROVIDED OUTSIDE THE CONTAINMENT. A SINGLE ACTIVE OR PASSIVE FAILURE CAN BE ACCOMMODATED SINCE THE SYSTEM IS CLOSED OUTSIDE THE CONTAINMENT AND IS DESIGNED AND CONSTRUCTED COMMENSURATE WITH THE DESIGN AND CONSTRUCTION OF THE CONTAINMENT. LEAKAGE DETECTION FROM THIS LINE OUTSIDE THE CONTAINMENT IS PROVIDED, AS DESCRIBED IN SECTION 9.3.3.

LOCAL TESTING OF THE VALVES OR THE CLOSED SYSTEM OUTSIDE THE CONTAINMENT IS NOT REQUIRED SINCE THE SYSTEM IS OPERATED AND INSPECTED DURING NORMAL PLANT OPERATION TO ASSURE THAT THE INTEGRITY IS BEING MAINTAINED.

NOTE: ALL VENTS, DRAINS AND FLOW POINTS AS INDICATED BELOW.

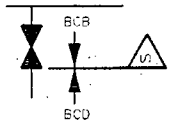

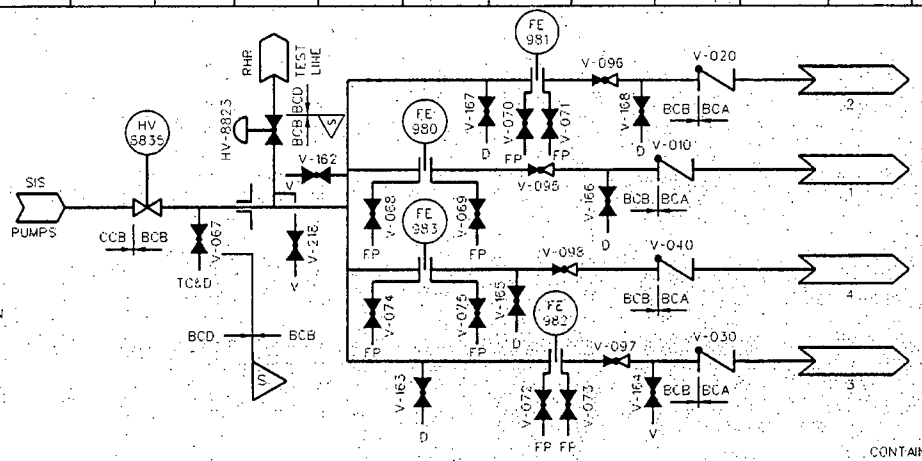

CONTAINMENT PENETRATION NO. P-49
DESCRIPTION:
COLD LEG INJECTION
HIGH PRESSURE COOLANT INJECTION SYSTEM
REFERENCE SECTION (S) 6.3
REV. 14

WOLF CREEK
UPDATED SAFETY ANALYSIS REPORT

CONTAINMENT PENETRATIONS
FIGURE 6.2.4-1
(PAGE 36 OF 74)

VALVE NO.	LINE/ VALVE SIZE, IN.	INSIDE/ OUTSIDE CONT.	NORMAL FLOW DIRECTION	VALVE TYPE	VALVE OPERATOR	POWER SOURCE	PRIMARY ACTUATION SIGNAL	SECONDARY ACTUATION SIGNAL	MAXIMUM CLOSURE TIME (SEC.)	VALVE POSITION					APPENDIX J REQUIREMENT
										NORMAL	SHUTDOWN	FAIL	PRIMARY	SECONDARY	
GPV-011	1/1	OUTSIDE	N/A	GLOBE	MANUAL	N/A	N/A	N/A	N/A	CLOSED	CLOSED	N/A	CLOSED	N/A	N/A
GPV-012	1/1	OUTSIDE	N/A	GLOBE	MANUAL	N/A	N/A	N/A	N/A	CLOSED	CLOSED	N/A	CLOSED	N/A	N/A
FLANGES	1/1	BOTH	N/A	N/A	N/A	N/A	N/A	N/A	N/A	N/A	N/A	N/A	N/A	N/A	B.

ASSOCIATED WITH A SAFETY FEATURES SYS. YES ☐ NO ☒

FLUID CONTAINED: AIR

LENGTH OF PIPING TO OUTERMOST ISOLATION VALVE: N/A

APPLICABLE GDC NO. 56

GENERAL COMMENTS:

FLANGES ARE REMOVED ONLY DURING PERFORMANCE OF TYPE A TEST

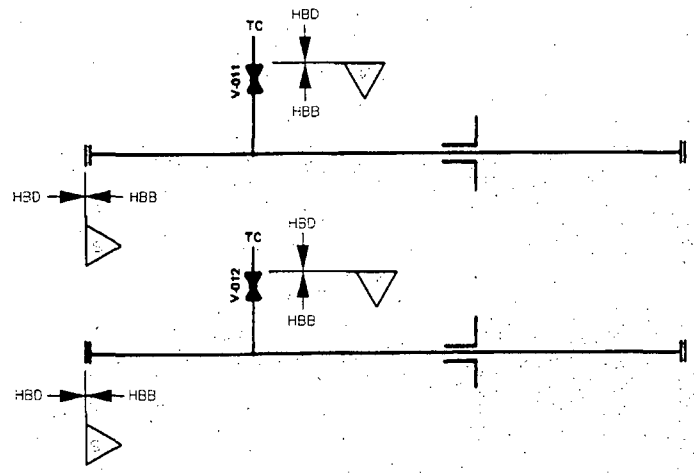

CONTAINMENT PENETRATION NO. P-51
DESCRIPTION:
PRESSURE SENSING LINES
ILRT PRESSURIZATION SYSTEM

REFERENCE SECTION(S) 6.2.6
REV. 13

WOLF CREEK
UPDATED SAFETY ANALYSIS REPORT

CONTAINMENT PENETRATIONS
FIGURE 6.2.4-1
PAGE 37 OF 74

VALVE NO.	LINE/ VALVE SIZE, IN.	INSIDE/ OUTSIDE CONT.	NORMAL FLOW DIRECTION	VALVE TYPE	VALVE OPERATOR	POWER SOURCE	PRIMARY ACTUATION SIGNAL	SECONDARY ACTUATION SIGNAL	MAXIMUM CLOSURE TIME (SEC.)	VALVE POSITION					APPENDIX J REQUIREMENT
										NORMAL	SHUTDOWN	FAIL	PRIMARY	SECONDARY	
EJHV-8701B	12/12	INSIDE	OUT	GATE	MOTOR	1	REM/MAN	NONE	120	CLOSED	OPEN	AS IS	CLOSED	N/A	A
EJ-8708B	3/3	INSIDE	N/A	RELIEF	N/A	N/A	N/A	N/A	N/A	CLOSED	CLOSED	N/A	CLOSED	N/A	A

ASSOCIATED WITH A SAFETY FEATURES SYS. YES [X] NO [ ]

FLUID CONTAINED: WATER

LENGTH OF PIPING TO OUTERMOST ISOLATION VALVE: N/A

APPLICABLE GDC NO. 55

GENERAL COMMENTS:

THE RESIDUAL HEAT REMOVAL SYSTEM SUCTION LINE FROM THE REACTOR COOLANT SYSTEM CONTAINS TWO NORMALLY CLOSED, POWER-OPERATED REMOTE MANUAL VALVES IN SERIES INSIDE THE CONTAINMENT. THE VALVES ARE ALSO INTERLOCKED TO PREVENT THEM FROM BEING INADVERTENTLY OPENED. CONTAINMENT ISOLATION IS ASSURED BY SYSTEM ISOLATION VALVES CLOSEST TO THE CONTAINMENT AND THE CLOSED SYSTEM OUTSIDE THE CONTAINMENT, WHICH IS DESIGNED AND CONSTRUCTED COMMENSURATE WITH THE DESIGN AND CONSTRUCTION OF THE CONTAINMENT. LEAKAGE DETECTION FROM THIS LINE OUTSIDE THE CONTAINMENT IS PROVIDED, AS DESCRIBED IN SECTION 9.3.3.

LOCAL TESTING OF THE VALVE OR THE CLOSED SYSTEM OUTSIDE THE CONTAINMENT IS NOT REQUIRED SINCE THE SYSTEM IS OPERATED AND INSPECTED DURING NORMAL PLANT OPERATION TO ASSURE THAT THE INTEGRITY IS BEING MAINTAINED.

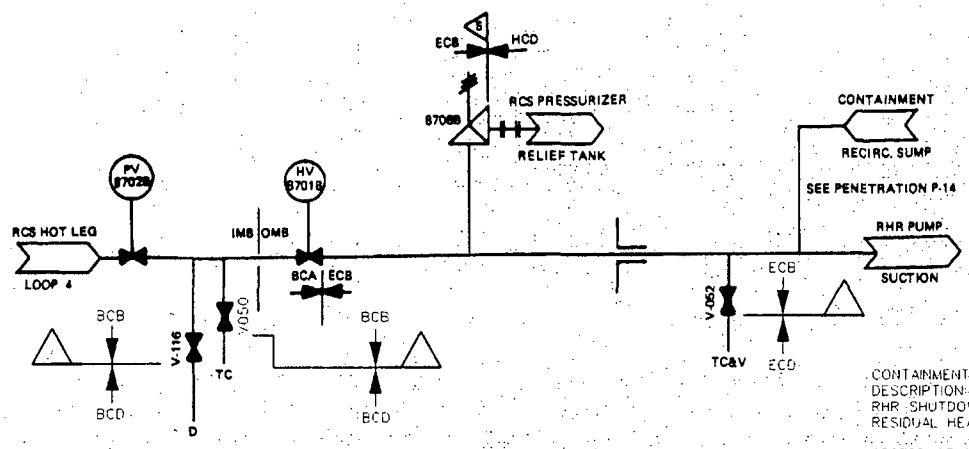

CONTAINMENT PENETRATION NO. P-52
DESCRIPTION:
RHR SHUTDOWN LINES
RESIDUAL HEAT REMOVAL SYSTEM

REFERENCE SECTION(S) 5.4.7 & 6.3
REV. 13

WOLF CREEK
UPDATED SAFETY ANALYSIS REPORT

CONTAINMENT PENETRATIONS
FIGURE 6.2.4-1
PAGE 38 OF 74

VALVE NO.	LINE/ VALVE SIZE, IN.	INSIDE/ OUTSIDE CONT.	NORMAL FLOW DIRECTION	VALVE TYPE	VALVE OPERATOR	POWER SOURCE	PRIMARY ACTUATION SIGNAL	SECONDARY ACTUATION SIGNAL	MAXIMUM CLOSURE TIME (SEC.)	VALVE POSITION					APPENDIX J REQUIREMENT
										NORMAL	SHUTDOWN	FAIL	PRIMARY	SECONDARY	
ECV-084	6/6	INSIDE	IN	GATE	MANUAL	N/A	N/A	N/A	N/A	CLOSED	OPEN	N/A	CLOSED	N/A	C
ECV-085	1/1	OUTSIDE	N/A	GLOBE	MANUAL	N/A	N/A	N/A	N/A	CLOSED	CLOSED	N/A	CLOSED	N/A	N/A
ECV-083	6/6	OUTSIDE	IN	GATE	MANUAL	N/A	N/A	N/A	N/A	CLOSED	OPEN	N/A	CLOSED	N/A	C

ASSOCIATED WITH A SAFETY FEATURES SYS. YES ☐ NO ☒

FLUID CONTAINED: WATER

LENGTH OF PIPING TO OUTERMOST ISOLATION VALVE: 6.1 FT

APPLICABLE GDC NO. 56

GENERAL COMMENTS:

NONE

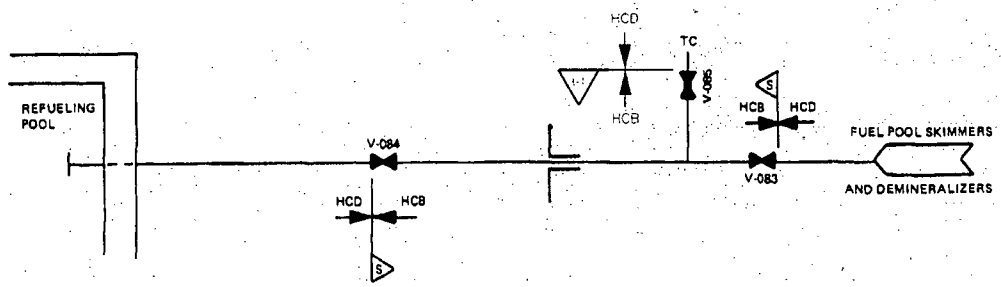

CONTAINMENT PENETRATION NO. P-53
DESCRIPTION:
CLEANUP RETURN
FUEL POOL COOLING
AND CLEANUP SYSTEM
REFERENCE SECTION(S) 9.1.3
REV. 13

WOLF CREEK
UPDATED SAFETY ANALYSIS REPORT

CONTAINMENT PENETRATIONS
FIGURE 6.2.4-1
PAGE 39 OF 74

VALVE NO	LINE/ VALVE SIZE, IN.	INSIDE/ OUTSIDE CONT.	NORMAL FLOW DIRECTION	VALVE TYPE	VALVE OPERATOR	POWER SOURCE	PRIMARY ACTUATION SIGNAL	SECONDARY ACTUATION SIGNAL	MAXIMUM CLOSURE TIME (SEC.)	VALVE POSITION					APPENDIX J REQUIREMENT
										NORMAL	SHUTDOWN	FAIL	PRIMARY	SECONDARY	
ECV-087	6/6	INSIDE	OUT	GATE	MANUAL	N/A	N/A	N/A	N/A	CLOSED	OPEN	N/A	CLOSED	N/A	C
ECV-086	1/1	OUTSIDE	N/A	GLOBE	MANUAL	N/A	N/A	N/A	N/A	CLOSED	CLOSED	N/A	CLOSED	N/A	N/A
ECV-088	6/6	OUTSIDE	OUT	GATE	MANUAL	N/A	N/A	N/A	N/A	CLOSED	OPEN	N/A	CLOSED	N/A	C

ASSOCIATED WITH A SAFETY FEATURES SYS: YES ☐ NO ☒

FLUID CONTAINED: WATER

LENGTH OF PIPING TO OUTERMOST ISOLATION VALVE: 6.1 FT

APPLICABLE GDC NO. - 56

GENERAL COMMENTS:

NONE

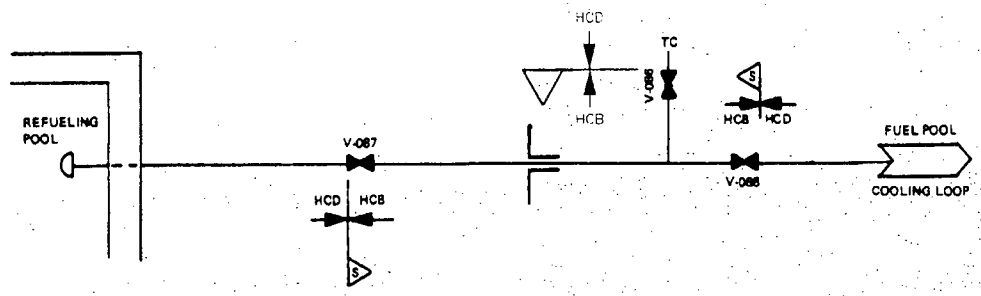

CONTAINMENT PENETRATION NO. P-54
DESCRIPTION:
REFUELING POOL CLEANUP LINE
FUEL POOL COOLING & CLEANUP SYSTEM

REFERENCE SECTION(S) 9.1.3
REV. 13

WOLF CREEK
UPDATED SAFETY ANALYSIS REPORT

CONTAINMENT PENETRATIONS
FIGURE 6.2.4-1
PAGE 40 OF 74

VALVE NO.	LINE/ VALVE SIZE, IN.	INSIDE/ OUTSIDE CONT.	NORMAL FLOW DIRECTION	VALVE TYPE	VALVE OPERATOR	POWER SOURCE	PRIMARY ACTUATION SIGNAL	SECONDARY ACTUATION SIGNAL	MAXIMUM CLOSURE TIME (SEC.)	VALVE POSITION					APPENDIX J REQUIREMENT
										NORMAL	SHUTDOWN	FAIL	PRIMARY	SECONDARY	
ECV-095	3/3	INSIDE	OUT	GATE	MANUAL	N/A	N/A	N/A	N/A	CLOSED	OPEN	N/A	CLOSED	N/A	C
ECV-094	1/1	OUTSIDE	N/A	GLOBE	MANUAL	N/A	N/A	N/A	N/A	CLOSED	CLOSED	N/A	CLOSED	N/A	N/A
ECV-096	3/3	OUTSIDE	OUT	GATE	MANUAL	N/A	N/A	N/A	N/A	CLOSED	OPEN	N/A	CLOSED	N/A	C

ASSOCIATED WITH A SAFETY FEATURES SYS. YES ☐ NO ☒

FLUID CONTAINED: WATER

LENGTH OF PIPING TO OUTERMOST ISOLATION VALVE: 6.1 FT

APPLICABLE GDC NO 56

GENERAL COMMENTS:

NONE

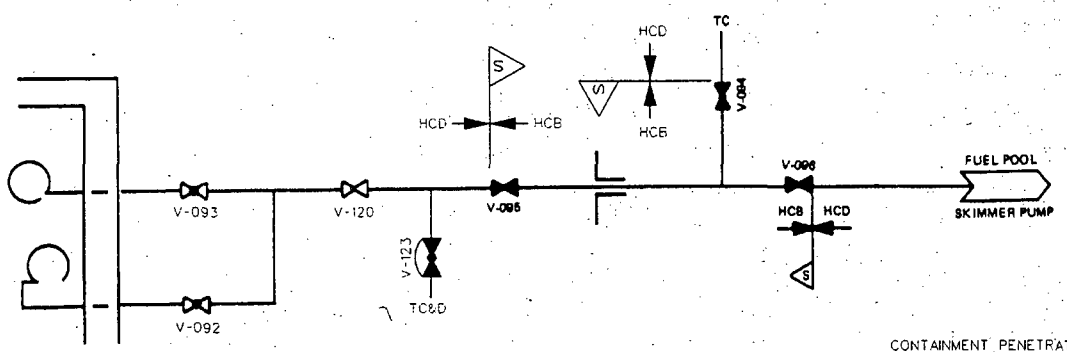

CONTAINMENT PENETRATION NO. P-55
DESCRIPTION:
REFUELING POOL SKIMMER LINES
FUEL POOL COOLING & CLEANUP SYSTEM

REFERENCE SECTION(S) 9.1.3
REV. 13

WOLF CREEK
UPDATED SAFETY ANALYSIS REPORT

CONTAINMENT PENETRATIONS
FIGURE 6.2.4-1
PAGE 41 OF 74

VALVE NO.	LINE/ VALVE SIZE, IN.	INSIDE/ OUTSIDE CONT.	NORMAL FLOW DIRECTION	VALVE TYPE	VALVE OPERATOR	POWER SOURCE	PRIMARY ACTUATION SIGNAL	SECONDARY ACTUATION SIGNAL	MAXIMUM CLOSURE TIME (SEC.)	VALVE POSITION					APPENDIX J REQUIREMENT
										NORMAL	SHUTDOWN	FAIL	PRIMARY	SECONDARY	
GSHV-9	1/1	INSIDE	IN	GATE	SOLENOID	4	CIS-A	REM/MAN	5	CLOSED	CLOSED	CLOSED	CLOSED	OPEN	A,C
GSHV-8	1/1	OUTSIDE	IN	GATE	SOLENOID	4	CIS-A	REM/MAN	5	CLOSED	CLOSED	CLOSED	CLOSED	OPEN	A,C
GSV-032	1/1	OUTSIDE	N/A	GLOBE	MANUAL	N/A	N/A	N/A	N/A	CLOSED	CLOSED	N/A	CLOSED	N/A	N/A

ASSOCIATED WITH A SAFETY FEATURES SYS. YES [X] NO [ ]

FLUID CONTAINED: CONT. ATM

LENGTH OF PIPING TO OUTERMOST ISOLATION VALVE: N/A

APPLICABLE GDC NO 56

GENERAL COMMENTS:

THIS PENETRATION IS ASSOCIATED WITH THE POST-ACCIDENT SAMPLING SYSTEM AND THE CONTAINMENT HYDROGEN CONTROL SYSTEM, WHICH IS REQUIRED TO MITIGATE THE CONSEQUENCES OF A LOCA.

THE HYDROGEN ANALYZER IS A CLOSED SYSTEM OUTSIDE THE CONTAINMENT WHICH IS DESIGNED AND CONSTRUCTED COMMENSURATE WITH THE DESIGN AND CONSTRUCTION OF THE CONTAINMENT.

TO ASSURE LEAKTIGHT INTEGRITY, THE VALVES ARE SUBJECTED TO TYPE C TESTING, AND THE SAMPLE LINES ARE OPENED DURING THE TYPE A TESTING.

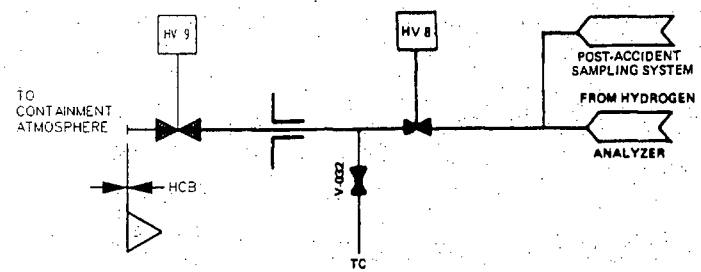

CONTAINMENT PENETRATION NO. P-56
DESCRIPTION:
H_2 SAMPLE RETURN
HYDROGEN CONTROL SYSTEM
CONTAINMENT
REFERENCE SECTION(S) 6.2.5
REV. 13

WOLF CREEK
UPDATED SAFETY ANALYSIS REPORT

CONTAINMENT PENETRATIONS
FIGURE 6.2.4-1
PAGE 42 OF 74

VALVE NO.	LINE/ VALVE SIZE, IN.	INSIDE/ OUTSIDE CONT.	NORMAL FLOW DIRECTION	VALVE TYPE	VALVE OPERATOR	POWER SOURCE	PRIMARY ACTUATION SIGNAL	SECONDARY ACTUATION SIGNAL	MAXIMUM CLOSURE TIME (SEC.)	VALVE POSITION					APPENDIX J REQUIREMENT
										NORMAL	SHUTDOWN	FAIL	PRIMARY	SECONDARY	
GSHV-38	1/1	OUTSIDE	IN	GATE	SOLENOID	1	CIS-A	REM/MAN	5	OPEN	OPEN	CLOSED	CLOSED	OPEN	C
GSHV-39	1/1	INSIDE	IN	GATE	SOLENOID	4	CIS-A	REM/MAN	5	OPEN	OPEN	CLOSED	CLOSED	OPEN	C
GSV-058	1/1	OUTSIDE	N/A	GLOBE	MANUAL	N/A	N/A	N/A	N/A	CLOSED	CLOSED	N/A	CLOSED	N/A	N/A

ASSOCIATED WITH A SAFETY FEATURES SYS.: YES ☐ NO ☒

FLUID CONTAINED: CONT. ATM

LENGTH OF PIPING TO OUTERMOST ISOLATION VALVE: 7.1

APPLICABLE GDC NO. 56

GENERAL COMMENTS:

NONE

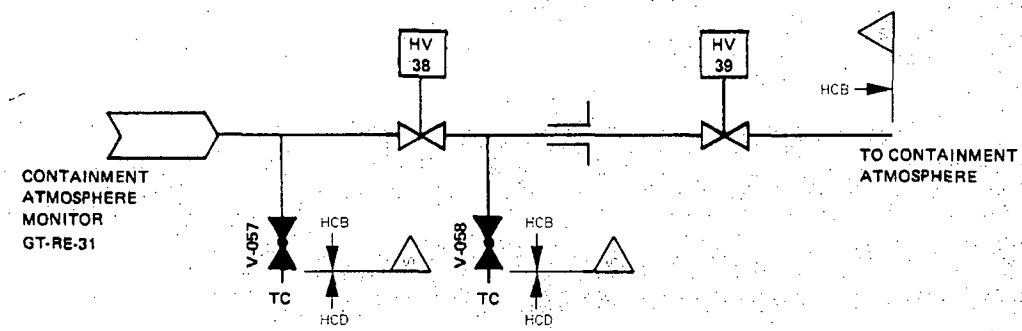

CONTAINMENT PENETRATION NO. P-56
DESCRIPTION:
SAMPLE RETURN
CONTAINMENT ATMOSPHERE MONITOR

REFERENCE SECTION(S) 9.4.6
REV. 13

WOLF CREEK
UPDATED SAFETY ANALYSIS REPORT

CONTAINMENT PENETRATIONS
FIGURE 6.2.4-1
PAGE 42a OF 74

VALVE NO.	LINE/ VALVE SIZE, IN.	INSIDE/ OUTSIDE CONT.	NORMAL FLOW DIRECTION	VALVE TYPE	VALVE OPERATOR	POWER SOURCE	PRIMARY ACTUATION SIGNAL	SECONDARY ACTUATION SIGNAL	MAXIMUM CLOSURE TIME (SEC.)	VALVE POSITION					APPENDIX J REQUIREMENT
										NORMAL	SHUTDOWN	FAIL	PRIMARY	SECONDARY	
SJHV-131	1/1	OUTSIDE	IN	GLOBE	SOLENOID	1	CIS-A	REM/MAN	5	CLOSED	CLOSED	CLOSED	CLOSED	OPEN	C
SJHV-132	1/1	OUTSIDE	IN	GLOBE	SOLENOID	4	CIS-4	REM/MAN	5	CLOSED	CLOSED	CLOSED	CLOSED	OPEN	C
SJV-111	1/1	INSIDE	IN	CHECK	N/A	N/A	N/A	N/A	N/A	CLOSED	CLOSED	N/A	CLOSED	OPEN	C
SJV-114	1/1	OUTSIDE	OUT	GLOBE	MANUAL	N/A	N/A	N/A	N/A	CLOSED	CLOSED	N/A	CLOSED	N/A	N/A

ASSOCIATED WITH A SAFETY FEATURES SYS. YES [X] NO [ ]

FLUID CONTAINED: REACTOR COOLANT & CONTAINMENT SUMP

LENGTH OF PIPING TO OUTERMOST ISOLATION VALVE: 8.1

APPLICABLE GDC NO. 56

GENERAL COMMENTS:

NONE

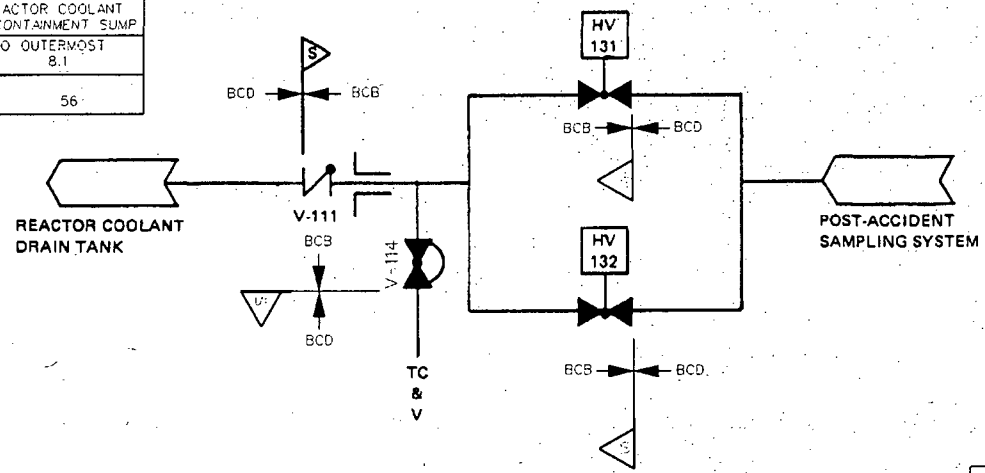

CONTAINMENT PENETRATION NO. P-57
DESCRIPTION:
SAMPLE RETURN
POST ACCIDENT SAMPLING SYSTEM

REFERENCE SECTION(S): 18.2.3
REV. 13

WOLF CREEK
UPDATED SAFETY ANALYSIS REPORT

CONTAINMENT PENETRATIONS
FIGURE 6.2.4-1
PAGE 42b OF 74

VALVE NO.	LINE/ VALVE SIZE, IN.	INSIDE/ OUTSIDE CONT.	NORMAL FLOW DIRECTION	VALVE TYPE	VALVE OPERATOR	POWER SOURCE	PRIMARY ACTUATION SIGNAL	SECONDARY ACTUATION SIGNAL	MAXIMUM CLOSURE TIME (SEC.)	VALVE POSITION					APPENDIX J REQUIREMENT
										NORMAL	SHUTDOWN	FAIL	PRIMARY	SECONDARY	
EMV-006	1/1	INSIDE	IN	CHECK	N/A	N/A	N/A	N/A	N/A	CLOSED	CLOSED	N/A	CLOSED	N/A	C
EMV-182	¾/¾	OUTSIDE	N/A	GLOBE	MANUAL	N/A	N/A	N/A	N/A	CLOSED	CLOSED	N/A	CLOSED	N/A	N/A
EMV-123	¾/¾	OUTSIDE	N/A	GLOBE	MANUAL	N/A	N/A	N/A	N/A	CLOSED	CLOSED	N/A	CLOSED	N/A	N/A
EMHV-8888	1/1	OUTSIDE	IN	GLOBE	AIR	4	CIS-A	NONE	5	CLOSED	CLOSED	CLOSED	CLOSED	N/A	C

ASSOCIATED WITH A SAFETY FEATURES SYS. YES ☐ NO ☒

FLUID CONTAINED: WATER

LENGTH OF PIPING TO OUTERMOST ISOLATION VALVE: 7.6 FT

APPLICABLE GDC NO. 56

GENERAL COMMENTS:

NONE

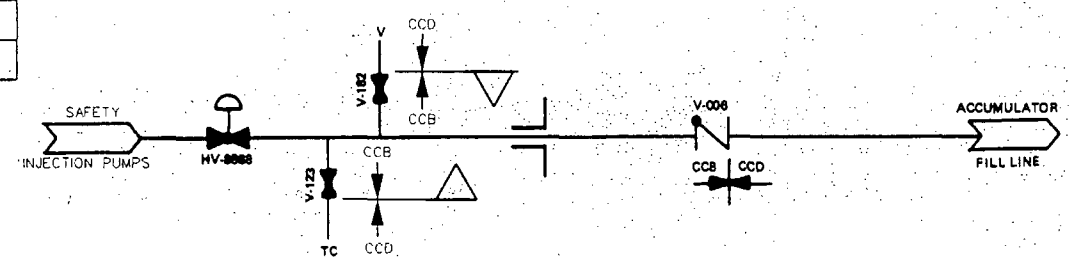

CONTAINMENT PENETRATION NO. P-58
DESCRIPTION:
ACCUMULATOR FILL LINE
HIGH PRESSURE COOLANT INJECTION SYSTEM
REFERENCE SECTION(S) 6.3
REV. 13

WOLF CREEK
UPDATED SAFETY ANALYSIS REPORT

CONTAINMENT PENETRATIONS
FIGURE 6.2.4-1
PAGE 43 OF 74

VALVE NO.	LINE/ VALVE SIZE, IN.	INSIDE/ OUTSIDE CONT.	NORMAL FLOW DIRECTION	VALVE TYPE	VALVE OPERATOR	POWER SOURCE	PRIMARY ACTUATION SIGNAL	SECONDARY ACTUATION SIGNAL	MAXIMUM CLOSURE TIME (SEC.)	VALVE POSITION					APPENDIX J REQUIREMENT
										NORMAL	SHUTDOWN	FAIL	PRIMARY	SECONDARY	
N/A	N/A	N/A	N/A	N/A	N/A	N/A	N/A	N/A	N/A	N/A	N/A	N/A	N/A	N/A	A

ASSOCIATED WITH A SAFETY FEATURES SYS. YES [ ] NO [X]

FLUID CONTAINED: WATER

LENGTH OF PIPING TO OUTERMOST ISOLATION VALVE: N/A

APPLICABLE GDC NO. 55

GENERAL COMMENTS:

HYDRAULIC SENSORS PROVIDE ISOLATION OF RCS FROM THE CAPILLARY TUBING. THE CAPILLARY TUBING AND THE LIS'S SERVE AS THE SECOND BOUNDARY. THIS ARRANGEMENT IS SIMILAR TO THAT PROVIDED FOR THE CONTAINMENT PRESSURE TRANSMITTERS SHOWN ON SHEET 72 OF 74.

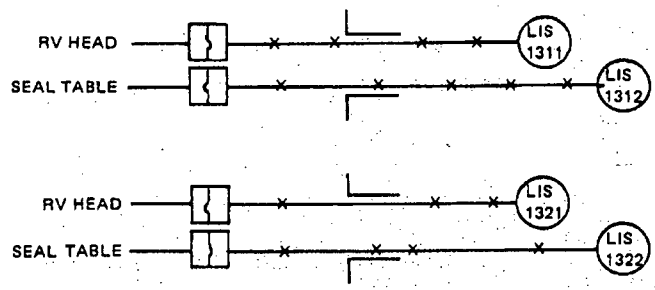

CONTAINMENT PENETRATION NO. P-59, 91
DESCRIPTION:
RVLIS SAMPLE LINE
REACTOR COOLANT SYSTEM

REFERENCE SECTION(S) 18.2.13.2
REV. 11

WOLF CREEK
UPDATED SAFETY ANALYSIS REPORT

CONTAINMENT PENETRATIONS
FIGURE 6.2.4-1
PAGE 43a OF 74

VALVE NO.	LINE/ VALVE SIZE, IN.	INSIDE/ OUTSIDE CONT.	NORMAL FLOW DIRECTION	VALVE TYPE	VALVE OPERATOR	POWER SOURCE	PRIMARY ACTUATION SIGNAL	SECONDARY ACTUATION SIGNAL	MAXIMUM CLOSURE TIME (SEC.)	VALVE POSITION					APPENDIX J REQUIREMENT
										NORMAL	SHUTDOWN	FAIL	PRIMARY	SECONDARY	
BBHV-8026	1/1	INSIDE	BOTH	DIAPHRAGM	AIR	1	CIS-A	NONE	10	CLOSED	OPEN	CLOSED	CLOSED	N/A	C
BBHV-8027	1/1	OUTSIDE	BOTH	DIAPHRAGM	AIR	4	CIS-A	NONE	10	CLOSED	OPEN	CLOSED	CLOSED	N/A	C

ASSOCIATED WITH A SAFETY FEATURES SYS. YES ☐ NO ☒

FLUID CONTAINED: GAS

LENGTH OF PIPING TO OUTERMOST ISOLATION VALVE: 12.3ft

APPLICABLE QDC NO. 56

GENERAL COMMENTS:

NONE

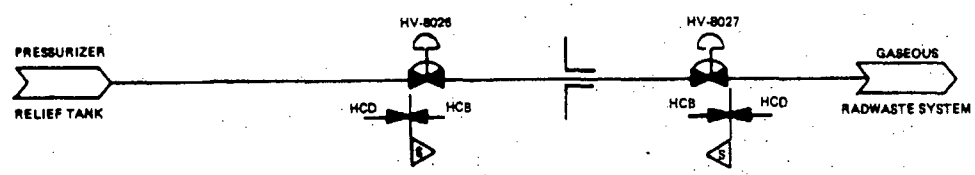

CONTAINMENT PENETRATION NO. P-62
DESCRIPTION:
PRESSURIZER PURGE & VENT LINE
REACTOR COOLANT SYSTEM

REFERENCE SECTION(S) 5.0
REV. 11

WOLF CREEK
UPDATED SAFETY ANALYSIS REPORT

CONTAINMENT PENETRATIONS
FIGURE 6.2.4-1
PAGE 44 OF 74

VALVE NO.	LINE/ VALVE SIZE, IN.	INSIDE/ OUTSIDE CONT.	NORMAL FLOW DIRECTION	VALVE TYPE	VALVE OPERATOR	POWER SOURCE	PRIMARY ACTUATION SIGNAL	SECONDARY ACTUATION SIGNAL	MAXIMUM CLOSURE TIME (SEC.)	VALVE POSITION					APPENDIX J REQUIREMENT
										NORMAL	SHUTDOWN	FAIL	PRIMARY	SECONDARY	
KAV-118	4/4	OUTSIDE	IN	GLOBE	MANUAL	N/A	N/A	N/A	N/A	CLOSED	CLOSED	N/A	CLOSED	N/A	C
KAV-163	1/1	OUTSIDE	N/A	GLOBE	MANUAL	N/A	N/A	N/A	N/A	CLOSED	CLOSED	N/A	CLOSED	N/A	N/A
KAV-039	4/4	INSIDE	IN	CHECK	N/A	N/A	N/A	N/A	N/A	CLOSED	CLOSED	N/A	CLOSED	N/A	C

ASSOCIATED WITH A SAFETY FEATURES SYS. YES ☐ NO ☒

FLUID CONTAINED: AIR

LENGTH OF PIPING TO OUTERMOST ISOLATION VALVE: 8.6ft

APPLICABLE GDC NO. 56

GENERAL COMMENTS:

NONE

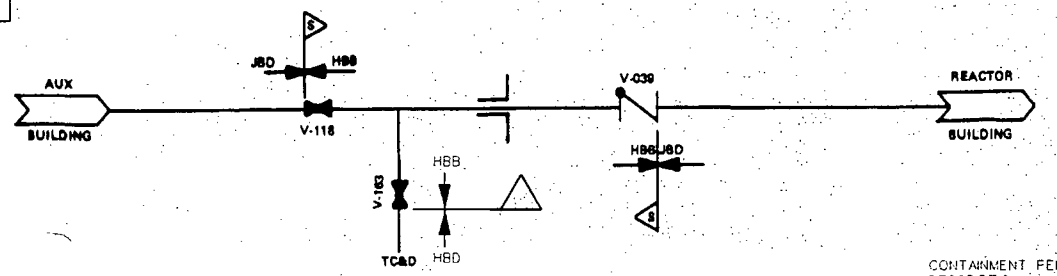

CONTAINMENT PENETRATION NO. P-63
DESCRIPTION:
SERVICE AIR
COMPRESSED AIR SYSTEM

REFERENCE SECTION(S) 9.3.1
REV. 13

WOLF CREEK
UPDATED SAFETY ANALYSIS REPORT

CONTAINMENT PENETRATIONS
FIGURE 6.2.4-1
PAGE 45 OF 74

VALVE NO.	LINE/ VALVE SIZE, IN.	INSIDE/ OUTSIDE CONT.	NORMAL FLOW DIRECTION	VALVE TYPE	VALVE OPERATOR	POWER SOURCE	PRIMARY ACTUATION SIGNAL	SECONDARY ACTUATION SIGNAL	MAXIMUM CLOSURE TIME (SEC.)	VALVE POSITION					APPENDIX J REQUIREMENT
										NORMAL	SHUTDOWN	FAIL	PRIMARY	SECONDARY	
SJHV-128	1/1	INSIDE	OUT	GLOBE	SOLENOID	1	CIS-A	REM/MAN	5	CLSOED	CLOSED	CLOSED	CLOSED	OPEN	C
SJHV-129	1/1	OUTSIDE	OUT	GLOBE	SOLENOID	4	CIS-A	REM/MAN	5	CLOSED	CLOSED	CLOSED	CLOSED	OPEN	C
SJHV-130	1/1	OUTSIDE	OUT	GLOBE	SOLENOID	1	CIS-A	REM/MAN	5	CLOSED	CLOSED	CLOSED	CLOSED	CLOSED	C
SJV-106	1/1	OUTSIDE	N/A	GLOBE	MANUAL	N/A	N/A	N/A	N/A	CLOSED	CLOSED	N/A	CLOSED	N/A	N/A

ASSOCIATED WITH A SAFETY FEATURES SYS.	YES ☐ NO ☒
FLUID CONTAINED: REACTOR COOLANT	
LENGTH OF PIPING TO OUTERMOST ISOLATION VALVE:	8.6
APPLICABLE GDC NO.	55

GENERAL COMMENTS:

NONE

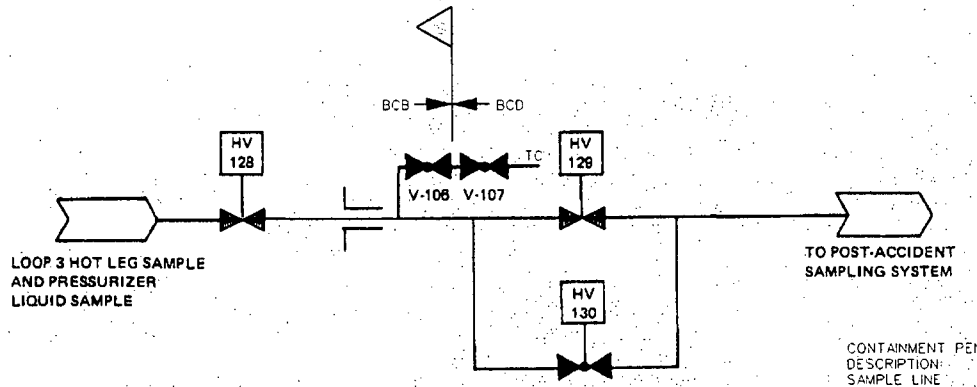

CONTAINMENT PENETRATION NO. P-64
DESCRIPTION:
SAMPLE LINE
POST-ACCIDENT SAMPLING SYSTEM

REFERENCE SECTION(S) 18.2.3
REV. 13

WOLF CREEK
UPDATED SAFETY ANALYSIS REPORT

CONTAINMENT PENETRATIONS
FIGURE 6.2.4-1
PAGE 45a OF 74

VALVE NO.	LINE/ VALVE SIZE, IN.	INSIDE/ OUTSIDE CONT.	NORMAL FLOW DIRECTION	VALVE TYPE	VALVE OPERATOR	POWER SOURCE	PRIMARY ACTUATION SIGNAL	SECONDARY ACTUATION SIGNAL	MAXIMUM CLOSURE TIME (SEC.)	VALVE POSITION					APPENDIX J REQUIREMENT
										NORMAL	SHUTDOWN	FAIL	PRIMARY	SECONDARY	
GSHV-20	6/6	INSIDE	OUT	BUTTERFLY	MOTOR	1	CIS-A	REM/MAN	5	CLOSED	CLOSED	AS IS	CLOSED	OPEN	C
GSHV-21	6/6	OUTSIDE	OUT	BUTTERFLY	MOTOR	4	CIS-A	REM/MAN	5	CLOSED	CLOSED	AS IS	CLOSED	OPEN	C
GSV-041	1/1	OUTSIDE	N/A	GLOBE	MANUAL	N/A	N/A	N/A	N/A	CLOSED	CLOSED	N/A	CLOSED	N/A	N/A

ASSOCIATED WITH A SAFETY FEATURES SYS. YES ☒ NO ☐

FLUID CONTAINED: CONT. AIR

LENGTH OF PIPING TO OUTERMOST ISOLATION VALVE 5.5ft

APPLICABLE GDC NO. 56

GENERAL COMMENTS:

NONE

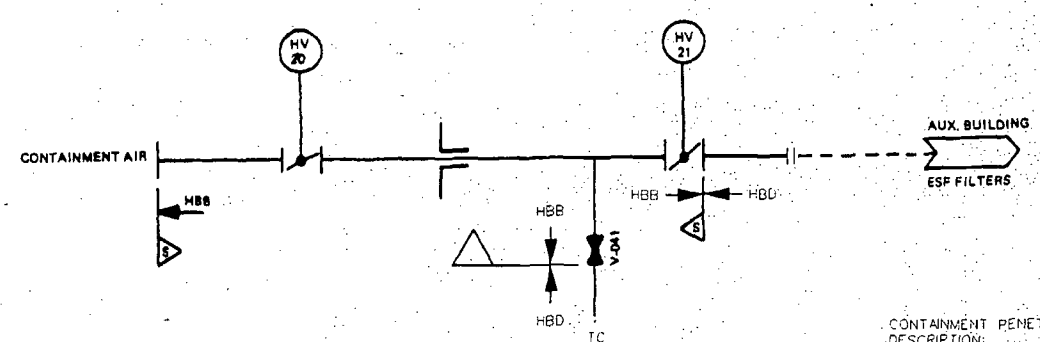

CONTAINMENT PENETRATION NO. 65
DESCRIPTION:
CONT. H_2 PURGE
CONTAINMENT HYDROGEN CONTROL SYSTEM

REFERENCE SECTION(S) 6.2.5
REV. 13

WOLF CREEK
UPDATED SAFETY ANALYSIS REPORT

CONTAINMENT PENETRATIONS
FIGURE 6.2.4-1
PAGE 46 OF 74

VALVE NO.	LINE/ VALVE SIZE, IN.	INSIDE/ OUTSIDE CONT.	NORMAL FLOW DIRECTION	VALVE TYPE	VALVE OPERATOR	POWER SOURCE	PRIMARY ACTUATION SIGNAL	SECONDARY ACTUATION SIGNAL	MAXIMUM CLOSURE TIME (SEC.)	VALVE POSITION					APPENDIX J REQUIREMENT
										NORMAL	SHUTDOWN	FAIL	PRIMARY	SECONDARY	
ENHV-12	10/10	OUTSIDE	IN	GATE	MOTOR	4	CSAS	REM/MAN	N/A	CLOSED	CLOSED	AS IS	OPEN	CLOSED	A
ENV-080	1/1	OUTSIDE	N/A	GLOBE	MANUAL	N/A	N/A	N/A	N/A	CLOSED	CLOSED	N/A	CLOSED	N/A	N/A
ENV-017	10/10	INSIDE	IN	CHECK	N/A	N/A	N/A	N/A	N/A	CLOSED	CLOSED	N/A	OPEN	CLOSED	A

ASSOCIATED WITH A SAFETY FEATURES SYS. YES [X] NO [ ]

FLUID CONTAINED: WATER

LENGTH OF PIPING TO OUTERMOST ISOLATION VALVE: N/A

APPLICABLE GDC NO. 56

GENERAL COMMENTS:

THIS PENETRATION IS ASSOCIATED WITH THE CONTAINMENT SPRAY SYSTEM, WHICH IS REQUIRED TO MITIGATE THE CONSEQUENCES OF A LOCA. A CHECK VALVE IS PROVIDED INSIDE THE CONTAINMENT, AND A REMOTE-MANUAL ISOLATION VALVE IS PROVIDED OUTSIDE THE CONTAINMENT. A SINGLE ACTIVE OR PASSIVE FAILURE CAN BE ACCOMMODATED SINCE THE SYSTEM IS CLOSED OUTSIDE THE CONTAINMENT AND IS DESIGNED AND CONSTRUCTED COMMENSURATE WITH THE DESIGN AND CONSTRUCTION OF THE CONTAINMENT. LEAKAGE DETECTION FROM THIS LINE OUTSIDE THE CONTAINMENT IS PROVIDED, AS DESCRIBED IN SECTION 9.3.3.

LOCAL TESTING OF THE VALVES OR THE CLOSED SYSTEM OUTSIDE THE CONTAINMENT IS NOT REQUIRED SINCE THE SYSTEM IS OPERATED AND INSPECTED DURING NORMAL PLANT OPERATION TO ASSURE THAT THE INTEGRITY IS BEING MAINTAINED.

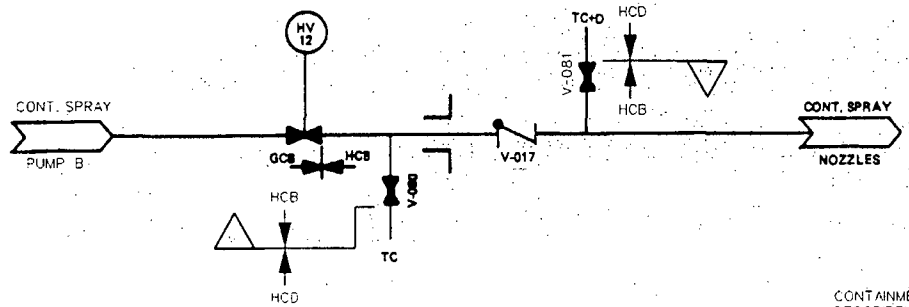

CONTAINMENT PENETRATION NO. P-66
DESCRIPTION:
CONTAINMENT SPRAY
CONTAINMENT SPRAY SYSTEM

REFERENCE SECTION(S) 6.2.2
REV. 13

WOLF CREEK
UPDATED SAFETY ANALYSIS REPORT

CONTAINMENT PENETRATIONS
FIGURE 6.2.4-1
PAGE 47 OF 74

VALVE NO	LINE/ VALVE SIZE, IN.	INSIDE/ OUTSIDE CONT.	NORMAL FLOW DIRECTION	VALVE TYPE	VALVE OPERATOR	POWER SOURCE	PRIMARY ACTUATION SIGNAL	SECONDARY ACTUATION SIGNAL	MAXIMUM CLOSURE TIME (SEC.)	VALVE POSITION					APPENDIX J REQUIREMENT
										NORMAL	SHUTDOWN	FAIL	PRIMARY	SECONDARY	
KCHV-253	4/4	OUTSIDE	IN	GATE	MOTOR	1	CIS-A	NONE	30	CLOSED	CLOSED	AS IS	CLOSED	N/A	C
KCV-478	4/4	INSIDE	IN	CHECK	N/A	N/A	N/A	N/A	N/A	CLOSED	CLOSED	N/A	CLOSED	N/A	C
KCV-431	1	INSIDE	N/A	GLOBE	MANUAL	N/A	N/A	N/A	N/A	CLOSED	CLOSED	N/A	CLOSED	N/A	N/A

ASSOCIATED WITH A SAFETY FEATURES SYS. YES ☐ NO ☒

FLUID CONTAINED: WATER

LENGTH OF PIPING TO OUTERMOST ISOLATION VALVE: 15.4

APPLICABLE GDC NO. 56

GENERAL COMMENTS:

NONE

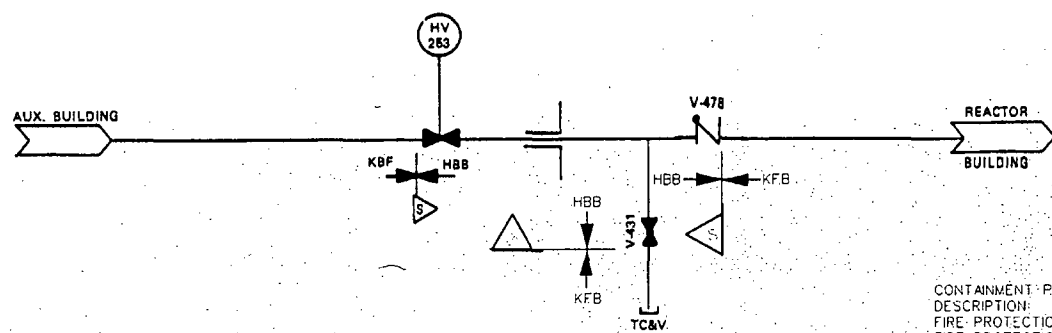

CONTAINMENT PENETRATION NO. P-67
DESCRIPTION:
FIRE PROTECTION
FIRE PROTECTION SYSTEM

REFERENCE SECTION(S) 9.5.1
REV. 13

WOLF CREEK
UPDATED SAFETY ANALYSIS REPORT

CONTAINMENT PENETRATIONS
FIGURE 6.2.4-1
PAGE 48 OF 74

VALVE NO.	LINE/ VALVE SIZE, IN.	INSIDE/ OUTSIDE CONT.	NORMAL FLOW DIRECTION	VALVE TYPE	VALVE OPERATOR	POWER SOURCE	PRIMARY ACTUATION SIGNAL	SECONDARY ACTUATION SIGNAL	MAXIMUM CLOSURE TIME (SEC.)	VALVE POSITION					APPENDIX J REQUIREMENT
										NORMAL	SHUTDOWN	FAIL	PRIMARY	SECONDARY	
SJHV-12	1/1	INSIDE	OUT	GATE	SOLENOID	4	CIS-A	NONE	5	CLOSED	CLOSED	CLOSED	CLOSED	N/A	C
SJHV-13	1/1	OUTSIDE	OUT	GATE	SOLENOID	1	CIS-A	NONE	5	CLOSED	CLOSED	CLOSED	CLOSED	N/A	C
SJV-071	1/1	OUTSIDE	N/A	GLOBE	MANUAL	N/A	N/A	N/A	N/A	CLOSED	CLOSED	N/A	CLOSED	N/A	N/A

ASSOCIATED WITH A SAFETY FEATURES SYS. YES ☐ NO ☒

FLUID CONTAINED: STEAM

LENGTH OF PIPING TO OUTERMOST ISOLATION VALVE: 7.7ft

APPLICABLE GDC NO. 55

GENERAL COMMENTS:

NONE

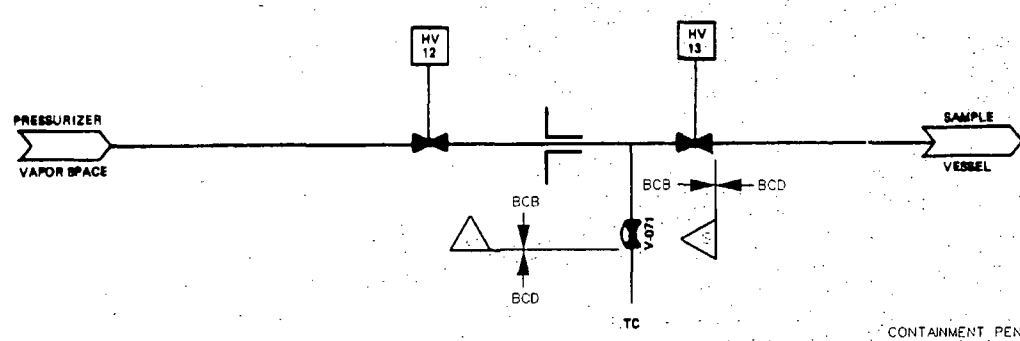

CONTAINMENT PENETRATION NO. P-69
DESCRIPTION:
PRESSURIZER VAPOR SAMPLE LINE
NUCLEAR SAMPLING SYSTEM

REFERENCE SECTION(S) 9.3.2
REV. 13

WOLF CREEK
UPDATED SAFETY ANALYSIS REPORT

CONTAINMENT PENETRATIONS
FIGURE 6.2.4-1
PAGE 49 OF 74

VALVE NO.	LINE/ VALVE SIZE, IN.	INSIDE/ OUTSIDE CONT.	NORMAL FLOW DIRECTION	VALVE TYPE	VALVE OPERATOR	POWER SOURCE	PRIMARY ACTUATION SIGNAL	SECONDARY ACTUATION SIGNAL	MAXIMUM CLOSURE TIME (SEC.)	VALVE POSITION					APPENDIX J REQUIREMENT
										NORMAL	SHUTDOWN	FAIL	PRIMARY	SECONDARY	
EFHV-31	14/14	OUTSIDE	IN	BUTTERFLY	MOTOR	1	SIS	REM/MAN	N/A	OPEN	OPEN	AS IS	OPEN	CLOSED	C
EFV-276	1/1	INSIDE	N/A	GATE	MANUAL	N/A	N/A	N/A	N/A	CLOSED	CLOSED	N/A	CLOSED	N/A	N/A
EFHV-33	14/14	INSIDE	IN	BUTTERFLY	MOTOR	1	SIS	REM/MAN	N/A	OPEN	OPEN	AS IS	OPEN	CLOSED	C

ASSOCIATED WITH A SAFETY FEATURES SYS. YES ☒ NO ☐

FLUID CONTAINED: WATER

LENGTH OF PIPING TO OUTERMOST ISOLATION VALVE: 15.5 ft

APPLICABLE GDC NO.: 56

GENERAL COMMENTS:

THIS PENETRATION IS ASSOCIATED WITH THE ESSENTIAL SERVICE WATER SYSTEM, WHICH IS REQUIRED TO MITIGATE THE CONSEQUENCES OF A LOCA. A REMOTE-MANUAL POWER-OPERATED VALVE IS LOCATED INSIDE, AND A REMOTE-MANUAL POWER-OPERATED VALVE IS LOCATED OUTSIDE THE CONTAINMENT.

THESE VALVES ARE POWERED FROM THE SAME POWER SOURCE FOR GREATER SYSTEM RELIABILITY. A SINGLE ACTIVE OR PASSIVE FAILURE CAN BE ACCOMMODATED SINCE THE SYSTEM IS A CLOSED SYSTEM INSIDE THE CONTAINMENT, WHICH IS DESIGNED AND CONSTRUCTED IN ACCORDANCE WITH ASME SECTION III, CLASS 3 REQUIREMENTS. THE ESSENTIAL SERVICE WATER LINES ARE NOT VENTED OR DRAINED DURING A TYPE A TEST SINCE THE AIR COOLERS MAY BE REQUIRED TO COOL THE CONTAINMENT. A TYPE C TEST IS PERFORMED.

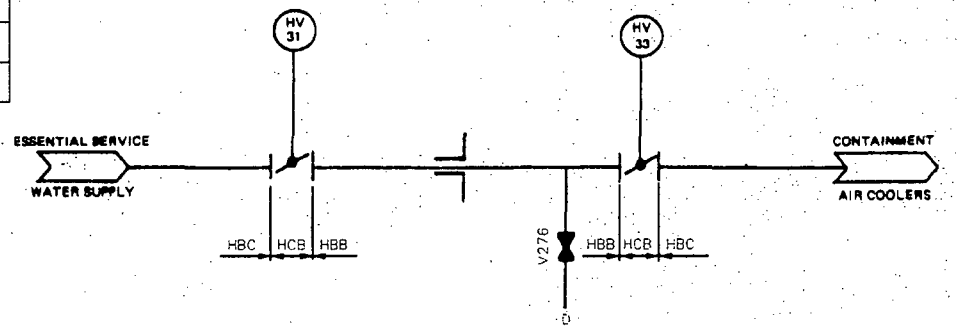

CONTAINMENT PENETRATION NO. P-71
DESCRIPTION:
ESW TO CONTAINMENT AIR COOLER
ESSENTIAL SERVICE WATER SYSTEM

REFERENCE: SECTION(S) 6.2.2
REV. 13

WOLF CREEK
UPDATED SAFETY ANALYSIS REPORT

CONTAINMENT PENETRATIONS
FIGURE 6.2.4-1
PAGE 50 OF 74

VALVE NO.	LINE/ VALVE SIZE, IN.	INSIDE/ OUTSIDE CONT.	NORMAL FLOW DIRECTION	VALVE TYPE	VALVE OPERATOR	POWER SOURCE	PRIMARY ACTUATION SIGNAL	SECONDARY ACTUATION SIGNAL	MAXIMUM CLOSURE TIME (SEC.)	VALVE POSITION					APPENDIX J REQUIREMENT
										NORMAL	SHUTDOWN	FAIL	PRIMARY	SECONDARY	
EFHV-45	14/14	INSIDE	OUT	BUTTERFLY	MOTOR	1	SIS	REM/MAN	N/A	OPEN	OPEN	AS IS	OPEN	CLOSED	C
EFV-277	1/1	INSIDE	N/A	GATE	MANUAL	N/A	N/A	N/A	N/A	CLOSED	CLOSED	N/A	CLOSED	N/A	N/A
EFHV-49	14/14	OUTSIDE	OUT	BUTTERFLY	MOTOR	1	SIS	REM/MAN	N/A	OPEN	OPEN	AS IS	OPEN	CLOSED	C

ASSOCIATED WITH A SAFETY FEATURES SYS. YES [X] NO [ ]

FLUID CONTAINED: WATER

LENGTH OF PIPING TO OUTERMOST ISOLATION VALVE: N/A

APPLICABLE GDC NO. 56

GENERAL COMMENTS:

THIS PENETRATION IS ASSOCIATED WITH THE ESSENTIAL SERVICE WATER SYSTEM, WHICH IS REQUIRED TO MITIGATE THE CONSEQUENCES OF A LOCA. A REMOTE-MANUAL POWER-OPERATED VALVE IS LOCATED INSIDE AND A REMOTE-MANUAL POWER-OPERATED VALVE IS LOCATED OUTSIDE THE CONTAINMENT.

THESE VALVES ARE POWERED FROM THE SAME POWER SOURCE FOR GREATER SYSTEM RELIABILITY. A SINGLE ACTIVE OR PASSIVE FAILURE CAN BE ACCOMMODATED SINCE THE SYSTEM IS A CLOSED SYSTEM INSIDE THE CONTAINMENT, WHICH IS DESIGNED AND CONSTRUCTED IN ACCORDANCE WITH ASME SECTION III, CLASS 3 REQUIREMENTS.

THE ESSENTIAL SERVICE WATER LINES ARE NOT VENTED OR DRAINED DURING A TYPE A TEST SINCE THE AIR COOLERS MAY BE REQUIRED TO COOL THE CONTAINMENT. A TYPE C TEST IS PERFORMED.

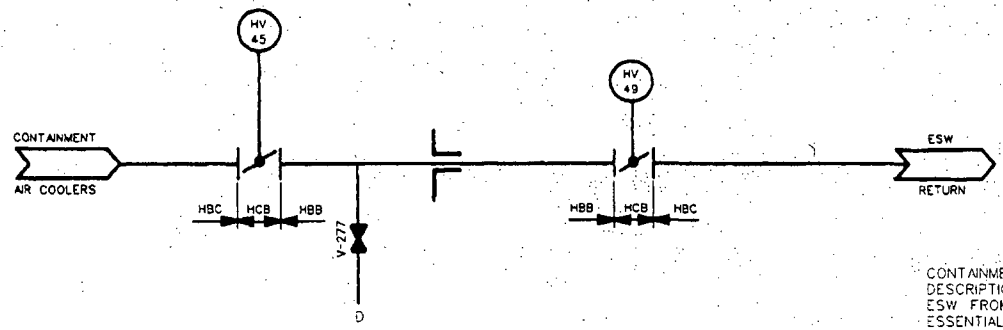

CONTAINMENT PENETRATION NO. P-73
DESCRIPTION:
ESW FROM CONTAINMENT AIR COOLER
ESSENTIAL SERVICE WATER SYSTEM

REFERENCE SECTION(S) 6.2.2
REV. 13

WOLF CREEK
UPDATED SAFETY ANALYSIS REPORT

CONTAINMENT PENETRATIONS
FIGURE 6.2.4-1
PAGE 51 OF 74

VALVE NO.	LINE/ VALVE SIZE, IN.	INSIDE/ OUTSIDE CONT.	NORMAL FLOW DIRECTION	VALVE TYPE	VALVE OPERATOR	POWER SOURCE	PRIMARY ACTUATION SIGNAL	SECONDARY ACTUATION SIGNAL	MAXIMUM CLOSURE TIME (SEC.)	VALVE POSITION					APPENDIX J REQUIREMENT
										NORMAL	SHUTDOWN	FAIL	PRIMARY	SECONDARY	
EGHV-58	12/12	OUTSIDE	IN	GATE	MOTOR	1	CIS-B	NONE	30	OPEN	OPEN	AS IS	CLOSED	N/A	C
EGV-090	1/1	OUTSIDE	N/A	GLOBE	MANUAL	N/A	N/A	N/A	N/A	CLOSED	CLOSED	N/A	CLOSED	N/A	N/A
EGV-204	12/12	INSIDE	IN	CHECK	N/A	N/A	N/A	N/A	N/A	OPEN	OPEN	N/A	CLOSED	N/A	C
EGHV-127	12/12	OUTSIDE	IN	GATE	MOTOR	4	REM/MAN	NONE	N/A	CLOSED	CLOSED	AS IS	CLOSED	N/A	C

ASSOCIATED WITH A SAFETY FEATURES SYS. YES ☐ NO ☒

FLUID CONTAINED: WATER

LENGTH OF PIPING TO OUTERMOST ISOLATION VALVE: 11.9 ft

APPLICABLE CDC NO. 56

GENERAL COMMENTS:

ISOLATION SWITCH PROVIDED IN THE CONTROL ROOM FOR POWER LOCKOUT OF VALVE HV-127

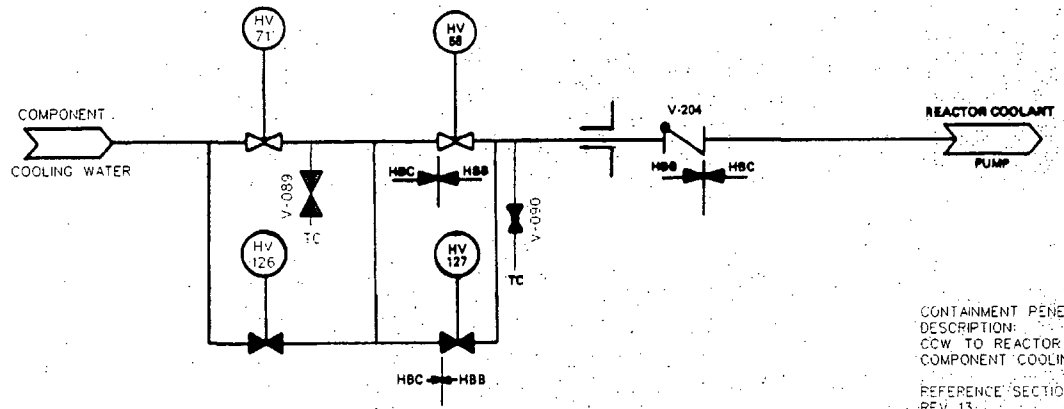

CONTAINMENT PENETRATION NO. P-74
DESCRIPTION:
CCW TO REACTOR COOLANT PUMPS
COMPONENT COOLING WATER SYSTEM

REFERENCE SECTION(S) 9.2.2
REV. 13

WOLF CREEK
UPDATED SAFETY ANALYSIS REPORT

CONTAINMENT PENETRATIONS
FIGURE 6.2.4-1
PAGE 52 OF 74

VALVE NO.	LINE/ VALVE SIZE, IN.	INSIDE/ OUTSIDE CONT.	NORMAL FLOW DIRECTION	VALVE TYPE	VALVE OPERATOR	POWER SOURCE	PRIMARY ACTUATION SIGNAL	SECONDARY ACTUATION SIGNAL	MAXIMUM CLOSURE TIME (SEC.)	VALVE POSITION					APPENDIX J REQUIREMENT
										NORMAL	SHUTDOWN	FAIL	PRIMARY	SECONDARY	
EGHV-60	12/12	INSIDE	OUT	GATE	MOTOR	4	CIS-B	NONE	30	OPEN	OPEN	AS IS	CLOSED	N/A	C
EG-V372	1/1	OUTSIDE	N/A	GLOBE	MANUAL	N/A	N/A	N/A	N/A	CLOSED	CLOSED	N/A	CLOSED	N/A	N/A
EGHV-59	12/12	OUTSIDE	OUT	GATE	MOTOR	1	CIS-B	NONE	30	OPEN	OPEN	AS IS	CLOSED	N/A	C
EGHV-131	12/12	OUTSIDE	OUT	GATE	MOTOR	4	REM/MAN	NONE	N/A	CLOSED	CLOSED	AS IS	CLOSED	N/A	C
EGHV-130	12/12	INSIDE	OUT	GATE	MOTOR	1	REM/MAN	NONE	N/A	CLOSED	CLOSED	AS IS	CLOSED	N/A	C

ASSOCIATED WITH A SAFETY FEATURES SYS. YES ☐ NO ☒

FLUID CONTAINED: WATER

LENGTH OF PIPING TO OUTERMOST ISOLATION VALVE: 11.1 ft

APPLICABLE GDC NO. 56

GENERAL COMMENTS:

ISOLATION SWITCH PROVIDED IN THE CONTROL ROOM FOR POWER LOCKOUT OF VALVES HV-130, 131

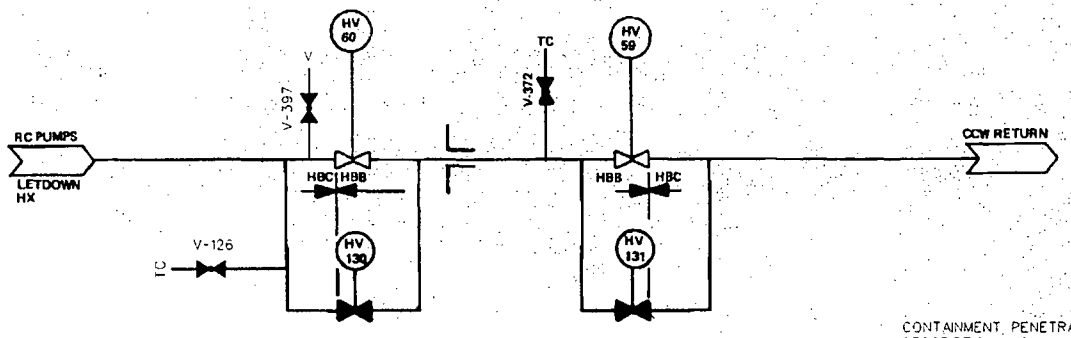

CONTAINMENT PENETRATION NO. P-75
DESCRIPTION:
CCW RETURN
COMPONENT COOLING WATER SYSTEM

REFERENCE SECTION(S) 9.2.2
REV. 13

WOLF CREEK
UPDATED SAFETY ANALYSIS REPORT

CONTAINMENT PENETRATIONS
FIGURE 6.2.4-1
PAGE 53 OF 74

VALVE NO.	LINE/ VALVE SIZE, IN.	INSIDE/ OUTSIDE CONT.	NORMAL FLOW DIRECTION	VALVE TYPE	VALVE OPERATOR	POWER SOURCE	PRIMARY ACTUATION SIGNAL	SECONDARY ACTUATION SIGNAL	MAXIMUM CLOSURE TIME (SEC.)	VALVE POSITION					APPENDIX J REQUIREMENT
										NORMAL	SHUTDOWN	FAIL	PRIMARY	SECONDARY	
EGHV-62	4/4	INSIDE	OUT	GATE	MOTOR	4	CIS-B	NONE	30	OPEN	OPEN	AS IS	CLOSED	N/A	C
EGV-371	1/1	OUTSIDE	N/A	GLOBE	MANUAL	N/A	N/A	N/A	N/A	CLOSED	CLOSED	N/A	CLOSED	N/A	N/A
EGHV-61	4/4	OUTSIDE	OUT	GATE	MOTOR	1	CIS-B	NONE	30	OPEN	OPEN	AS IS	CLOSED	N/A	C
EGHV-132	4/4	INSIDE	OUT	GATE	MOTOR	1	REM/MAN	NONE	N/A	CLOSED	CLOSED	AS IS	CLOSED	N/A	C
EGHV-133	4/4	OUTSIDE	OUT	GATE	MOTOR	4	REM/MAN	NONE	N/A	CLOSED	CLOSED	AS IS	CLOSED	N/A	C

ASSOCIATED WITH A SAFETY FEATURES SYS. YES ☐ NO ☒

FLUID CONTAINED: WATER

LENGTH OF PIPING TO OUTERMOST ISOLATION VALVE: 7.9 ft

APPLICABLE GDC NO. 56

GENERAL COMMENTS:

ISOLATION SWTICH PROVIDED IN THE CONTROL ROOM FOR POWER LOCKOUT OF VALVES HV132 AND HV133

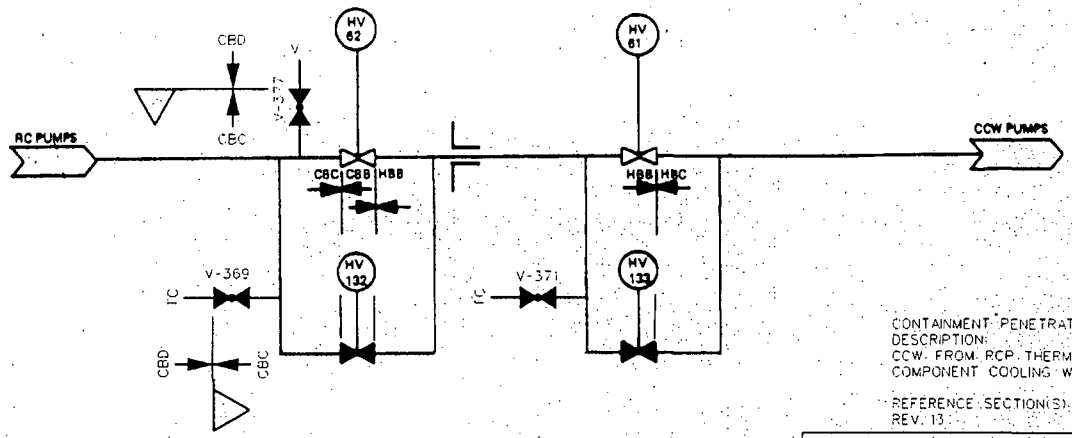

CONTAINMENT PENETRATION NO. P-76
DESCRIPTION:
CCW. FROM RCP THERMAL BARRIER COMPONENT COOLING WATER SYSTEM

REFERENCE SECTION(S): 9.2.2
REV. 13

WOLF CREEK
UPDATED SAFETY ANALYSIS REPORT

CONTAINMENT PENETRATIONS
FIGURE 6.2.4-1
PAGE 54 OF 74

VALVE NO.	LINE/ VALVE SIZE, IN.	INSIDE/ OUTSIDE CONT.	NORMAL FLOW DIRECTION	VALVE TYPE	VALVE OPERATOR	POWER SOURCE	PRIMARY ACTUATION SIGNAL	SECONDARY ACTUATION SIGNAL	MAXIMUM CLOSURE TIME (SEC.)	VALVE POSITION					APPENDIX J REQUIREMENT
										NORMAL	SHUTDOWN	FAIL	PRIMARY	SECONDARY	
BMV-045	3/3	INSIDE	OUT	GATE	MANUAL	N/A	N/A	N/A	N/A	CLOSED	CLOSED	N/A	CLOSED	N/A	C
BMV-302	1/1	OUTSIDE	N/A	GLOBE	MANUAL	N/A	N/A	N/A	N/A	CLOSED	CLOSED	N/A	CLOSED	N/A	N/A
BMV-046	3/3	OUTSIDE	OUT	GATE	MANUAL	N/A	N/A	N/A	N/A	CLOSED	CLOSED	N/A	CLOSED	N/A	C

ASSOCIATED WITH A SAFETY FEATURES SYS. YES ☐ NO ☒

FLUID CONTAINED: WATER

LENGTH OF PIPING TO OUTERMOST ISOLATION VALVE: 6.1 ft.

APPLICABLE GDC NO. 56

GENERAL COMMENTS:

NONE

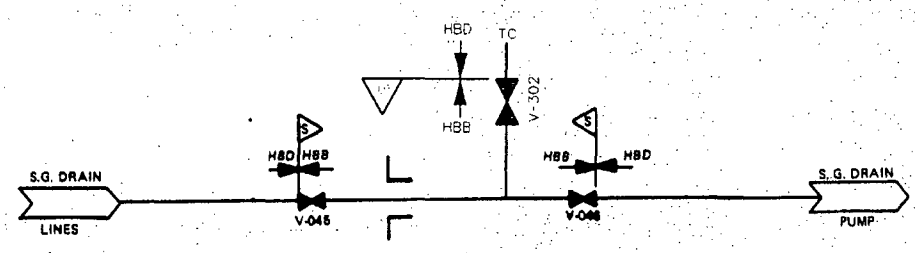

CONTAINMENT PENETRATION NO. P-78
DESCRIPTION:
STEAM GENERATOR DRAIN LINE
STEAM GENERATOR BLOWDOWN SYSTEM

REFERENCE SECTION(S) 10.4.8
REV. 13

WOLF CREEK
UPDATED SAFETY ANALYSIS REPORT

CONTAINMENT PENETRATIONS
FIGURE 6.2.4-1
PAGE 55 OF 74

VALVE NO.	LINE/ VALVE SIZE, IN.	INSIDE/ OUTSIDE CONT.	NORMAL FLOW DIRECTION	VALVE TYPE	VALVE OPERATOR	POWER SOURCE	PRIMARY ACTUATION SIGNAL	SECONDARY ACTUATION SIGNAL	MAXIMUM CLOSURE TIME (SEC.)	VALVE POSITION					APPENDIX J REQUIREMENT
										NORMAL	SHUTDOWN	FAIL	PRIMARY	SECONDARY	
EJHV-8701A	12/12	INSIDE	OUT	GATE	MOTOR	1	REM/MAN	NONE	N/A	CLOSED	OPEN	AS IS	CLOSED	N/A	A
EJ8708A	3/3	INSIDE	N/A	RELIEF	N/A	N/A	N/A	N/A	N/A	CLOSED	CLOSED	N/A	CLOSED	N/A	A
EJV-154	¾/¾	INSIDE	N/A	GLOBE	MANUAL	N/A	N/A	N/A	N/A	CLOSED	CLOSED	N/A	CLOSED	N/A	N/A

ASSOCIATED WITH A SAFETY FEATURES SYS. YES [X] NO [ ]

FLUID CONTAINED: WATER

LENGTH OF PIPING TO OUTERMOST ISOLATION VALVE: N/A

APPLICABLE GDC NO: 55

GENERAL COMMENTS:

THE RESIDUAL HEAT REMOVAL SYSTEM SUCTION LINE FROM THE REACTOR COOLANT SYSTEM CONTAINS TWO NORMALLY CLOSED, POWER-OPERATED REMOTE MANUAL VALVES IN SERIES INSIDE THE CONTAINMENT. THE VALVES ARE ALSO INTERLOCKED TO PREVENT THEM FROM BEING INADVERTENTLY OPENED. CONTAINMENT ISOLATION IS ASSURED BY SYSTEM ISOLATION VALVES CLOSEST TO THE CONTAINMENT AND THE CLOSED SYSTEM OUTSIDE THE CONTAINMENT, WHICH IS DESIGNED AND CONSTRUCTED COMMENSURATE WITH THE DESIGN AND CONSTRUCTION OF THE CONTAINMENT. LEAKAGE DETECTION FROM THIS LINE OUTSIDE THE CONTAINMENT IS PROVIDED, AS DESCRIBED IN SECTION 9.3.3.

LOCAL TESTING OF THE VALVE OR THE CLOSED SYSTEM OUTSIDE THE CONTAINMENT IS NOT REQUIRED SINCE THE SYSTEM IS OPERATED AND INSPECTED DURING NORMAL PLANT OPERATION TO ASSURE THAT THE INTEGRITY IS BEING MAINTAINED.

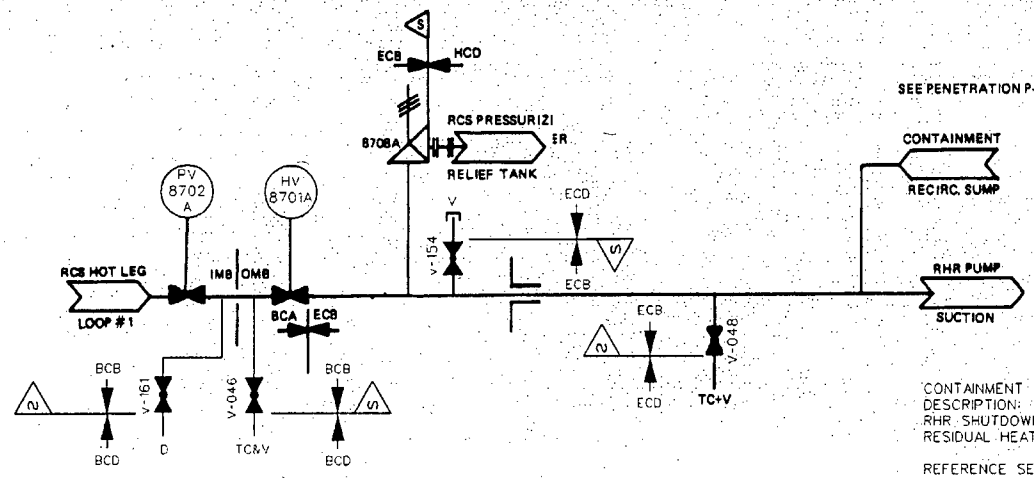

CONTAINMENT PENETRATION NO. P-79
DESCRIPTION:
RHR SHUTDOWN LINES
RESIDUAL HEAT REMOVAL SYSTEM

REFERENCE SECTION(S) 5.4.7 and 6.3
REV. 13

WOLF CREEK
UPDATED SAFETY ANALYSIS REPORT

CONTAINMENT PENETRATIONS
FIGURE 6.2.4-1
PAGE 56 OF 74

VALVE NO.	LINE/ VALVE SIZE, IN.	INSIDE/ OUTSIDE CONT.	NORMAL FLOW DIRECTION	VALVE TYPE	VALVE OPERATOR	POWER SOURCE	PRIMARY ACTUATION SIGNAL	SECONDARY ACTUATION SIGNAL	MAXIMUM CLOSURE TIME (SEC.)	VALVE POSITION					APPENDIX J REQUIREMENT
										NORMAL	SHUTDOWN	FAIL	PRIMARY	SECONDARY	
BGHV-8105	3/3	OUTSIDE	IN	GATE	MOTOR	4	SIS	NONE	10	OPEN	OPEN	AS IS	CLOSED	N/A	C
BGV-342	1/1	INSIDE	N/A	GLOBE	MANUAL	N/A	N/A	N/A	N/A	CLOSED	CLOSED	N/A	CLOSED	N/A	N/A
BG8381	3/3	INSIDE	IN	CHECK	N/A	N/A	N/A	N/A	N/A	OPEN	OPEN	N/A	CLOSED	N/A	C

ASSOCIATED WITH A SAFETY FEATURES SYS. YES ☐ NO ☒

FLUID CONTAINED: WATER

LENGTH OF PIPING TO OUTERMOST ISOLATION VALVE 18.1 ft

APPLICABLE GDC NO. 55

GENERAL COMMENTS:

NONE

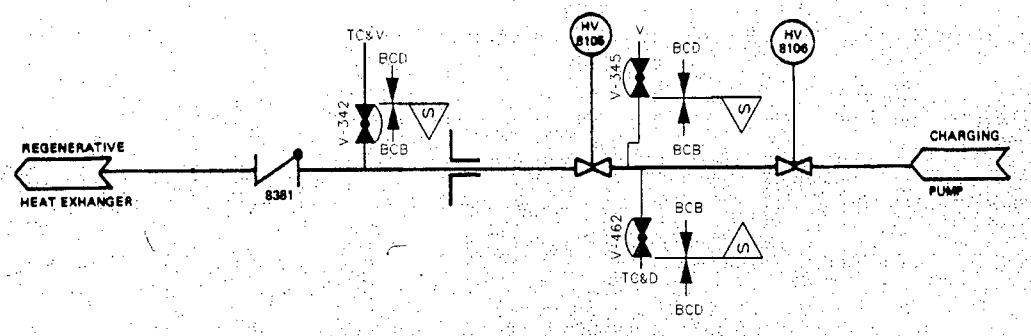

CONTAINMENT PENETRATION NO. P-80
DESCRIPTION:
CHARGING LINE
CHEMICAL AND VOLUME CONTROL SYSTEM

REFERENCE SECTION(S) 9.3.4
REV. 13

WOLF CREEK
UPDATED SAFETY ANALYSIS REPORT

CONTAINMENT PENETRATIONS
FIGURE 6.2.4-1
PAGE 57 OF 74

VALVE NO.	LINE/ VALVE SIZE, IN.	INSIDE/ OUTSIDE CONT.	NORMAL FLOW DIRECTION	VALVE TYPE	VALVE OPERATOR	POWER SOURCE	PRIMARY ACTUATION SIGNAL	SECONDARY ACTUATION SIGNAL	MAXIMUM CLOSURE TIME (SEC.)	VALVE POSITION					APPENDIX J REQUIREMENT
										NORMAL	SHUTDOWN	FAIL	PRIMARY	SECONDARY	
EJHV-8809A	10/10	OUTSIDE	IN	GATE	MOTOR	1	NONE	REM/MAN	N/A	OPEN	OPEN	AS IS	OPEN	CLOSED	A
EJV-054	1/1	OUTSIDE	N/A	GLOBE	MANUAL	N/A	N/A	N/A	N/A	CLOSED	CLOSED	N/A	CLOSED	N/A	N/A
EP8818A	6/6	INSIDE	IN	CHECK	N/A	N/A	N/A	N/A	N/A	CLOSED	CLOSED	N/A	OPEN	CLOSED	A
EP8818B	6/6	INSIDE	IN	CHECK	N/A	N/A	N/A	N/A	N/A	CLOSED	CLOSED	N/A	OPEN	CLOSED	A
EJHCV-8890A	3/4/3/4	INSIDE	OUT	GLOBE	AIR	1	CIS-A	NONE	13	CLOSED	CLOSED	CLOSED	CLOSED	N/A	A
EJV-134, V-136	3/4/3/4	INSIDE	N/A	GLOBE	MANUAL	N/A	N/A	N/A	N/A	CLOSED	CLOSED	N/A	CLOSED	N/A	N/A
EJV-132	1/1	INSIDE	N/A	GLOBE	MANUAL	N/A	N/A	N/A	N/A	CLOSED	CLOSED	N/A	CLOSED	N/A	N/A
EJV-171, EJV-172 EJV-173, EJV-174	3/4/3/4	INSIDE	N/A	GLOBE	MANUAL	N/A	N/A	N/A	N/A	CLOSED	CLOSED	N/A	CLOSED	N/A	N/A

ASSOCIATED WITH A SAFETY FEATURES SYS. YES [X] NO [ ]

FLUID CONTAINED: WATER

LENGTH OF PIPING TO OUTERMOST ISOLATION VALVE: N/A

APPLICABLE CDC NO. 55

GENERAL COMMENTS:

THIS PENETRATION IS ASSOCIATED WITH THE HIGH PRESSURE COOLANT INJECTION SYSTEM, WHICH IS REQUIRED TO MITIGATE THE CONSEQUENCES OF A LOCA. A CHECK VALVE IS PROVIDED FOR EACH BRANCH LINE INSIDE THE CONTAINMENT, AND A REMOTE-MANUAL ISOLATION VALVE IS PROVIDED OUTSIDE THE CONTAINMENT. A SINGLE ACTIVE OR PASSIVE FAILURE CAN BE ACCOMMODATED SINCE THE SYSTEM IS CLOSED OUTSIDE THE CONTAINMENT AND IS DESIGNED AND CONSTRUCTED COMMENSURATE WITH THE DESIGN AND CONSTRUCTION OF THE CONTAINMENT. LEAKAGE DETECTION FROM THIS LINE OUTSIDE THE CONTAINMENT IS PROVIDED, AS DESCRIBED IN SECTION 9.3.3.

LOCAL TESTING OF THE VALVES OR THE CLOSED SYSTEM OUTSIDE THE CONTAINMENT IS NOT REQUIRED SINCE THE SYSTEM IS OPERATED AND INSPECTED DURING NORMAL PLANT OPERATION TO ASSURE THAT THE INTEGRITY IS BEING MAINTAINED.

NOTE: ALL VENTS, DRAINS AND FLOW POINTS AS INDICATED BELOW.

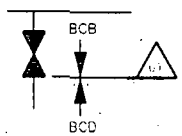

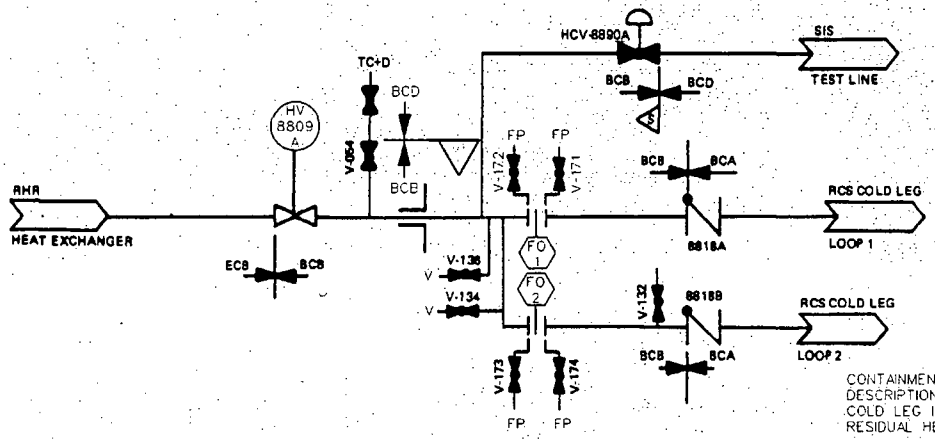

CONTAINMENT PENETRATION NO. P-82
DESCRIPTION:
COLD LEG INJECTION
RESIDUAL HEAT REMOVAL SYSTEM

REFERENCE SECTION(S) 5.4.7 and 6.3
REV. 13

WOLF CREEK
UPDATED SAFETY ANALYSIS REPORT

CONTAINMENT PENETRATIONS
FIGURE 6.2.4-1
PAGE 58 OF 74

VALVE NO.	LINE/ VALVE SIZE, IN.	INSIDE/ OUTSIDE CONT.	NORMAL FLOW DIRECTION	VALVE TYPE	VALVE OPERATOR	POWER SOURCE	PRIMARY ACTUATION SIGNAL	SECONDARY ACTUATION SIGNAL	MAXIMUM CLOSURE TIME (SEC.)	VALVE POSITION					APPENDIX. J REQUIREMENT
										NORMAL	SHUTDOWN	FAIL	PRIMARY	SECONDARY	

ASSOCIATED WITH A SAFETY FEATURES SYS.	YES [X] NO [ ]
FLUID CONTAINED: WATER	
LENGTH OF PIPING TO OUTERMOST ISOLATION VALVE:	N/A
APPLICABLE GDC NO.	NONE

GENERAL COMMENTS:

THE CONTAINMENT PENETRATIONS ASSOCIATED WITH THE STEAM GENERATORS ARE NOT SUBJECT TO GDC-57, SINCE THE CONTAINMENT BARRIER INTEGRITY IS NOT BREACHED. THE BOUNDARY OR BARRIER AGAINST FISSION PRODUCT LEAKAGE TO THE ENVIRONMENT IS THE INSIDE OF THE STEAM GENERATOR TUBES AND THE OUTSIDE OF THE LINES EMANATING FROM THE STEAM GENERATOR SHELLS.

THIS PENETRATION IS INCLUDED FOR FIGURE COMPLETENESS. NONE OF THE VALVES SHOWN ARE CONSIDERED CONTAINMENT ISOLATION VALVES.

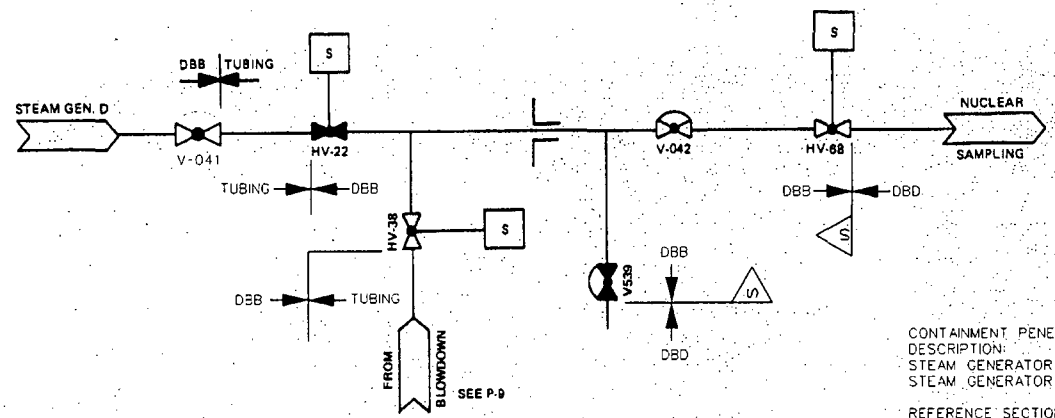

CONTAINMENT PENETRATION NO. P-83
DESCRIPTION:
STEAM GENERATOR D SAMPLE LINE
STEAM GENERATOR BLOWDOWN SYSTEM

REFERENCE SECTION(S) 10.4.8
REV. 13

WOLF CREEK
UPDATED SAFETY ANALYSIS REPORT

CONTAINMENT PENETRATIONS
FIGURE 6.2.4-1
PAGE 59 OF 74

VALVE NO.	LINE/ VALVE SIZE, IN.	INSIDE/ OUTSIDE CONT.	NORMAL FLOW DIRECTION	VALVE TYPE	VALVE OPERATOR	POWER SOURCE	PRIMARY ACTUATION SIGNAL	SECONDARY ACTUATION SIGNAL	MAXIMUM CLOSURE TIME (SEC.)	VALVE POSITION					APPENDIX J REQUIREMENT
										NORMAL	SHUTDOWN	FAIL	PRIMARY	SECONDARY	

ASSOCIATED WITH A SAFETY FEATURES SYS. YES [X] NO [ ]

FLUID CONTAINED: WATER

LENGTH OF PIPING TO OUTERMOST ISOLATION VALVE: N/A

APPLICABLE GDC NO. NONE

GENERAL COMMENTS:

THE CONTAINMENT PENETRATIONS ASSOCIATED WITH THE STEAM GENERATORS ARE NOT SUBJECT TO GDC-57, SINCE THE CONTAINMENT BARRIER INTEGRITY IS NOT BREACHED. THE BOUNDARY OR BARRIER AGAINST FISSION PRODUCT LEAKAGE TO THE ENVIRONMENT IS THE INSIDE OF THE STEAM GENERATOR TUBES AND THE OUTSIDE OF THE LINES EMANATING FROM THE STEAM GENERATOR SHELLS.

THIS PENETRATION IS INCLUDED FOR FIGURE COMPLETENESS. NONE OF THE VALVES SHOWN ARE CONSIDERED CONTAINMENT ISOLATION VALVES.

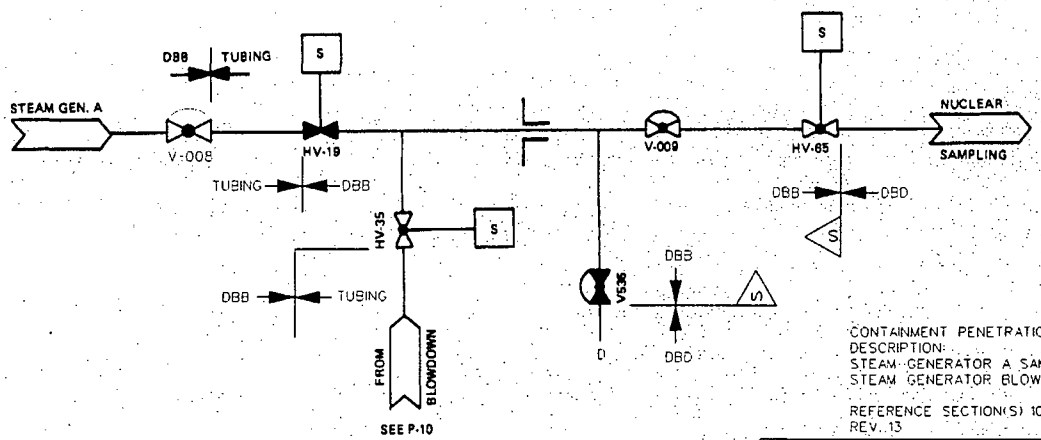

CONTAINMENT PENETRATION NO. P-84
DESCRIPTION:
STEAM GENERATOR A SAMPLE LINE
STEAM GENERATOR BLOWDOWN SYSTEM

REFERENCE SECTION(S) 10.4.8
REV. 13

WOLF CREEK
UPDATED SAFETY ANALYSIS REPORT

CONTAINMENT PENETRATIONS
FIGURE 6.2.4-1
PAGE 60 OF 74

VALVE NO.	LINE/ VALVE SIZE, IN.	INSIDE/ OUTSIDE CONT.	NORMAL FLOW DIRECTION	VALVE TYPE	VALVE OPERATOR	POWER SOURCE	PRIMARY ACTUATION SIGNAL	SECONDARY ACTUATION SIGNAL	MAXIMUM CLOSURE TIME (SEC.)	VALVE POSITION					APPENDIX J REQUIREMENT
										NORMAL	SHUTDOWN	FAIL	PRIMARY	SECONDARY	

ASSOCIATED WITH A SAFETY FEATURES SYS. YES [X] NO [ ]

FLUID CONTAINED: WATER

LENGTH OF PIPING TO OUTERMOST ISOLATION VALVE: N/A

APPLICABLE GDC NO. NONE

GENERAL COMMENTS:

THE CONTAINMENT PENETRATIONS ASSOCIATED WITH THE STEAM GENERATORS ARE NOT SUBJECT TO GDC-57, SINCE THE CONTAINMENT BARRIER INTEGRITY IS NOT BREACHED. THE BOUNDARY OR BARRIER AGAINST FISSION PRODUCT LEAKAGE TO THE ENVIRONMENT IS THE INSIDE OF THE STEAM GENERATOR TUBES AND THE OUTSIDE OF THE LINES EMANATING FROM THE STEAM GENERATOR SHELLS.

THIS PENETRATION IS INCLUDED FOR FIGURE COMPLETENESS. NONE OF THE VALVES SHOWN ARE CONSIDERED CONTAINMENT ISOLATION VALVES.

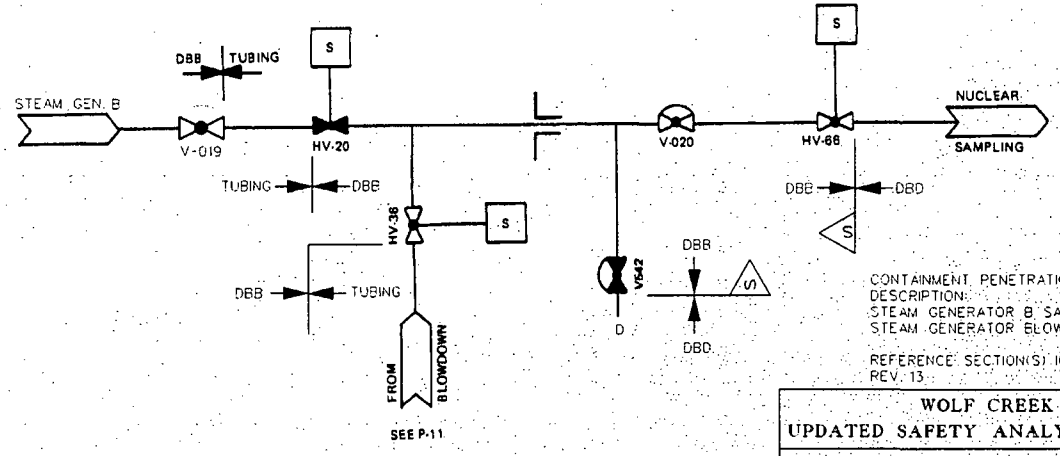

CONTAINMENT PENETRATION NO. P-85
DESCRIPTION:
STEAM GENERATOR B SAMPLE LINE
STEAM GENERATOR BLOWDOWN SYSTEM

REFERENCE SECTION(S) 10.4.8
REV. 13

WOLF CREEK
UPDATED SAFETY ANALYSIS REPORT

CONTAINMENT PENETRATIONS
FIGURE 6.2.4-1
PAGE 61 OF 74

VALVE NO.	LINE/ VALVE SIZE, IN.	INSIDE/ OUTSIDE CONT.	NORMAL FLOW DIRECTION	VALVE TYPE	VALVE OPERATOR	POWER SOURCE	PRIMARY ACTUATION SIGNAL	SECONDARY ACTUATION SIGNAL	MAXIMUM CLOSURE TIME (SEC.)	VALVE POSITION					APPENDIX J REQUIREMENT
										NORMAL	SHUTDOWN	FAIL	PRIMARY	SECONDARY	

ASSOCIATED WITH A SAFETY FEATURES SYS. YES [X] NO [ ]

FLUID CONTAINED: WATER

LENGTH OF PIPING TO OUTERMOST ISOLATION VALVE: N/A

APPLICABLE GDC NO. NONE

GENERAL COMMENTS:

THE CONTAINMENT PENETRATIONS ASSOCIATED WITH THE STEAM GENERATORS ARE NOT SUBJECT TO GDC-57, SINCE THE CONTAINMENT BARRIER INTEGRITY IS NOT BREACHED. THE BOUNDARY OR BARRIER AGAINST FISSION PRODUCT LEAKAGE TO THE ENVIRONMENT IS THE INSIDE OF THE STEAM GENERATOR TUBES AND THE OUTSIDE OF THE LINES EMANATING FROM THE STEAM GENERATOR SHELLS.

THIS PENETRATION IS INCLUDED FOR FIGURE COMPLETENESS. NONE OF THE VALVES SHOWN ARE CONSIDERED CONTAINMENT ISOLATION VALVES.

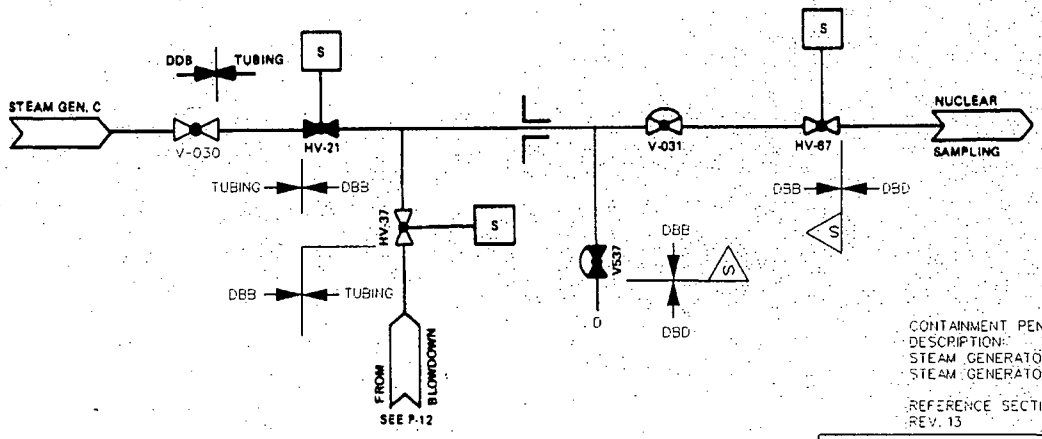

CONTAINMENT PENETRATION NO. F-86
DESCRIPTION:
STEAM GENERATOR C SAMPLE LINE
STEAM GENERATOR BLOWDOWN SYSTEM

REFERENCE SECTION(S) 10.4.8
REV. 13

WOLF CREEK
UPDATED SAFETY ANALYSIS REPORT

CONTAINMENT PENETRATIONS
FIGURE 6.2.4-1
PAGE 62 OF 74

VALVE NO.	LINE/ VALVE SIZE, IN.	INSIDE/ OUTSIDE CONT.	NORMAL FLOW DIRECTION	VALVE TYPE	VALVE OPERATOR	POWER SOURCE	PRIMARY ACTUATION SIGNAL	SECONDARY ACTUATION SIGNAL	MAXIMUM CLOSURE TIME, (SEC.)	VALVE POSITION					APPENDIX J REQUIREMENT
										NORMAL	SHUTDOWN	FAIL	PRIMARY	SECONDARY	
EMHV-8802A	4/4	OUTSIDE	IN	GATE	MOTOR	1	NONE	REM/MAN	N/A	CLOSED	CLOSED	AS IS	CLOSED	OPEN	A
EMHV-8881	¾/¾	INSIDE	OUT	GLOBE	AIR	1	CIS-A	NONE	10	CLOSED	CLOSED	CLOSED	CLOSED	N/A	A
EMV-001	2/2	INSIDE	IN	CHECK	N/A	N/A	N/A	N/A	N/A	CLOSED	CLOSED	N/A	CLOSED	OPEN	A
EMV-002	2/2	INSIDE	IN	CHECK	N/A	N/A	N/A	N/A	N/A	CLOSED	CLOSED	N/A	CLOSED	OPEN	A
EMV-052, V-053, V-055, V-056, V-184, V-185	¾/¾	INSIDE	N/A	GLOBE	MANUAL	N/A	N/A	N/A	N/A	CLOSED	CLOSED	N/A	CLOSED	N/A	N/A
EMV-051	1/1	OUTSIDE	N/A	GLOBE	MANUAL	N.A	N/A	N/A	N/A	CLOSED	CLOSED	N/A	CLOSED	N/A	N/A
EMV-186, V-187	1/1	INSIDE	N/A	GLOBE	MANUAL	N.A	N/A	N/A	N/A	CLOSED	CLOSED	N/A	CLOSED	N/A	N/A

ASSOCIATED WITH A SAFETY FEATURES SYS. YES ☒ NO ☐

FLUID CONTAINED: WATER

LENGTH OF PIPING TO OUTERMOST ISOLATION VALVE: N/A

APPLICABLE GDC NO. 55

GENERAL COMMENTS:

THIS PENETRATION IS ASSOCIATED WITH THE HIGH PRESSURE COOLANT INJECTION SYSTEM, WHICH IS REQUIRED TO MITIGATE THE CONSEQUENCES OF A LOCA. A CHECK VALVE IS PROVIDED FOR EACH BRANCH LINE INSIDE THE CONTAINMENT, AND A REMOTE-MANUAL ISOLATION VALVE IS PROVIDED OUTSIDE THE CONTAINMENT. A SINGLE ACTIVE OR PASSIVE FAILURE CAN BE ACCOMMODATED SINCE THE SYSTEM IS CLOSED OUTSIDE THE CONTAINMENT AND IS DESIGNED AND CONSTRUCTED COMMENSURATE WITH THE DESIGN AND CONSTRUCTION OF THE CONTAINMENT. LEAKAGE DETECTION FROM THIS LINE OUTSIDE THE CONTAINMENT IS PROVIDED, AS DESCRIBED IN SECTION 9.3.3.

LOCAL TESTING OF THE VALVES OR THE CLOSED SYSTEM OUTSIDE THE CONTAINMENT IS NOT REQUIRED SINCE THE SYSTEM IS OPERATED AND INSPECTED DURING NORMAL PLANT OPERATION TO ASSURE THAT THE INTEGRITY IS BEING MAINTAINED.

NOTE: ALL VENTS, DRAINS AND FLOW POINTS AS INDICATED BELOW.

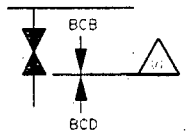

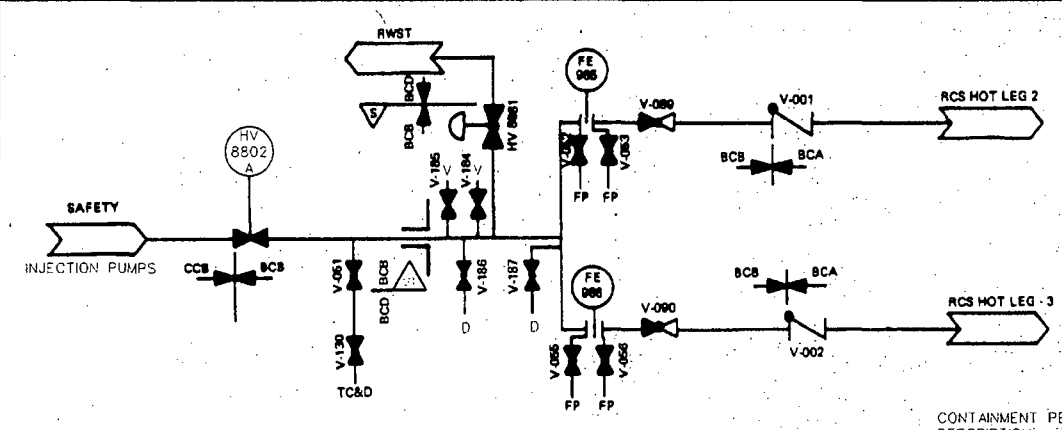

CONTAINMENT PENETRATION NO. P-87
DESCRIPTION:
HOT LEG INJECTION
HIGH PRESSURE COOLANT INJECTION SYSTEM
REFERENCE SECTION(S) 6.3
REV. 13

WOLF CREEK
UPDATED SAFETY ANALYSIS REPORT

CONTAINMENT PENETRATIONS
FIGURE 6.2.4-1
PAGE 63 OF 74

VALVE NO.	LINE/ VALVE SIZE, IN.	INSIDE/ OUTSIDE CONT.	NORMAL FLOW DIRECTION	VALVE TYPE	VALVE OPERATOR	POWER SOURCE	PRIMARY ACTUATION SIGNAL	SECONDARY ACTUATION SIGNAL	MAXIMUM CLOSURE TIME (SEC.)	VALVE POSITION					APPENDIX J REQUIREMENT
										NORMAL	SHUTDOWN	FAIL	PRIMARY	SECONDARY	
EMHV-8801A	4/4	OUTSIDE	IN	GATE	MOTOR	1	SIS	NONE	N/A	CLOSED	CLOSED	AS IS	OPEN	N/A	A
EMHV-8801B	4/4	OUTSIDE	IN	GATE	MOTOR	4	SIS	NONE	N/A	CLOSED	CLOSED	AS IS	OPEN	N/A	A
EMV-077	1/1	OUTSIDE	N/A	GLOBE	MANUAL	N/A	N/A	N/A	N/A	CLOSED	CLOSED	N/A	CLOSED	N/A	N/A
EMHV-8843	3/4/3/4	INSIDE	IN	GLOBE	AIR	4	CIS-A	NONE	10	CLOSED	CLOSED	CLOSED	CLOSED	N/A	A
EMV-8815	3/3	INSIDE	IN	CHECK	N/A	N/A	N/A	N/A	N/A	CLOSED	CLOSED	N/A	OPEN	N/A	A
EMV-151	1/1	OUTSIDE	OUT	GLOBE	MANUAL	N/A	N/A	N/A	N/A	CLOSED	CLOSED	N/A	CLOSED	N/A	N/A

ASSOCIATED WITH A SAFETY FEATURES SYS. YES [X] NO [ ]

FLUID CONTAINED: WATER

LENGTH OF PIPING TO OUTERMOST ISOLATION VALVE N/A

APPLICABLE GDC NO. 55

GENERAL COMMENTS:

THIS PENETRATION IS ASSOCIATED WITH THE HIGH PRESSURE COOLANT INJECTION SYSTEM, WHICH IS REQUIRED TO MITIGATE THE CONSEQUENCES OF A LOCA. A CHECK VALVE IS PROVIDED FOR EACH BRANCH LINE INSIDE THE CONTAINMENT, AND A REMOTE-MANUAL ISOLATION VALVE IS PROVIDED FOR EACH BRANCH LINE OUTSIDE THE CONTAINMENT. A SINGLE ACTIVE OR PASSIVE FAILURE CAN BE ACCOMODATED SINCE THE SYSTEM IS CLOSED OUTSIDE THE CONTAINMENT AND IS DESIGNED AND CONSTRUCTED COMMENSURATE WITH THE DESIGN AND CONSTRUCTION OF THE CONTAINMENT. LEAKAGE DETECTION FROM THIS LINE OUTSIDE THE CONTAINMENT IS PROVIDED, AS DESCRIBED IN SECTION 9.3.3.

LOCAL TESTING OF THE VALVES OR THE CLOSED SYSTEM OUTSIDE THE CONTAINMENT IS NOT REQUIRED SINCE THE SYSTEM IS OPERATED AND INSPECTED DURING NORMAL PLANT OPERATION TO ASSURE THAT THE INTEGRITY IS BEING MAINTAINED.

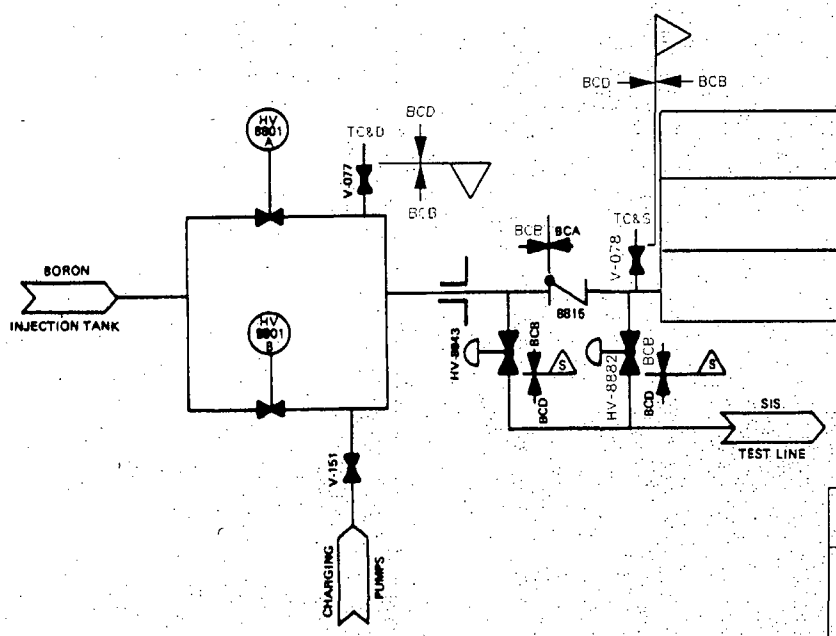

CONTAINMENT PENETRATION NO. P-88
DESCRIPTION:
BORON INJECTION TO COLD LEGS
HIGH PRESSURE COOLANT INJECTION SYSTEM
REFERENCE SECTION(S): 6.3
REV. 13

WOLF CREEK
UPDATED SAFETY ANALYSIS REPORT

CONTAINMENT PENETRATIONS
FIGURE 6.2.4-1
PAGE 64 OF 74

VALVE NO.	LINE/ VALVE SIZE, IN.	INSIDE/ OUTSIDE CONT.	NORMAL FLOW DIRECTION	VALVE TYPE	VALVE OPERATOR	POWER SOURCE	PRIMARY ACTUATION SIGNAL	SECONDARY ACTUATION SIGNAL	MAXIMUM CLOSURE TIME (SEC.)	VALVE POSITION					APPENDIX J REQUIREMENT
										NORMAL	SHUTDOWN	FAIL	PRIMARY	SECONDARY	
ENHV-06	10/10	OUTSIDE	IN	GATE	MOTOR	1	CSAS	REM/MAN	N/A	CLOSED	CLOSED	AS IS	OPEN	CLOSED	A
ENV-076	1/1	OUTSIDE	N/A	GLOBE	MANUAL	N/A	N/A	N/A	N/A	CLOSED	CLOSED	N/A	CLOSED	N/A	N/A
ENV-013	10/10	INSIDE	IN	CHECK	N/A	N/A	N/A	N/A	N/A	CLOSED	CLOSED	N/A	OPEN	CLOSED	A

ASSOCIATED WITH A SAFETY FEATURES SYS. YES ☒ NO ☐

FLUID CONTAINED: WATER

LENGTH OF PIPING TO OUTERMOST ISOLATION VALVE: N/A

APPLICABLE GDC NO. 56

GENERAL COMMENTS:

THIS PENETRATION IS ASSOCIATED WITH THE CONTAINMENT SPRAY SYSTEM, WHICH IS REQUIRED TO MITIGATE THE CONSEQUENCES OF A LOCA. A CHECK VALVE IS PROVIDED INSIDE THE CONTAINMENT, AND A REMOTE-MANUAL ISOLATION VALVE IS PROVIDED OUTSIDE THE CONTAINMENT. A SINGLE ACTIVE OR PASSIVE FAILURE CAN BE ACCOMMODATED SINCE THE SYSTEM IS CLOSED OUTSIDE THE CONTAINMENT AND IS DESIGNED AND CONSTRUCTED COMMENSURATE WITH THE DESIGN AND CONSTRUCTION OF THE CONTAINMENT. LEAKAGE DETECTION FROM THIS LINE OUTSIDE THE CONTAINMENT IS PROVIDED, AS DESCRIBED IN SECTION 9.3.3.

LOCAL TESTING OF THE VALVES OR THE CLOSED SYSTEM OUTSIDE THE CONTAINMENT IS NOT REQUIRED SINCE THE SYSTEM IS OPERATED AND INSPECTED DURING NORMAL PLANT OPERATION TO ASSURE THAT THE INTEGRITY IS BEING MAINTAINED.

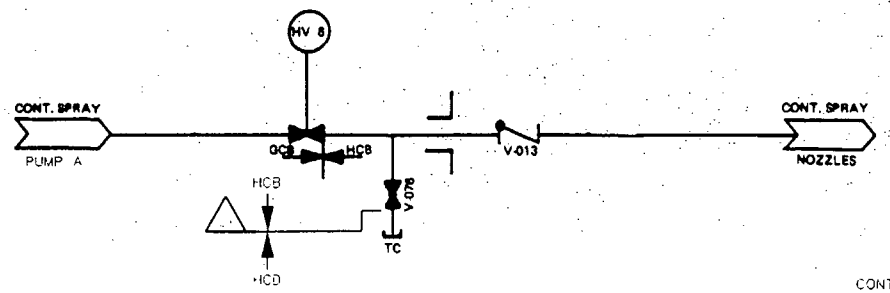

CONTAINMENT PENETRATION NO. P-89
DESCRIPTION:
CONTAINMENT SPRAY
CONTAINMENT SPRAY SYSTEM

REFERENCE SECTION(S) 6.2.2
REV. 13

WOLF CREEK
UPDATED SAFETY ANALYSIS REPORT

CONTAINMENT PENETRATIONS
FIGURE 6.2.4-1
PAGE 65 OF 74

VALVE NO.	LINE/ VALVE SIZE, IN.	INSIDE/ OUTSIDE CONT.	NORMAL FLOW DIRECTION	VALVE TYPE	VALVE OPERATOR	POWER SOURCE	PRIMARY ACTUATION SIGNAL	SECONDARY ACTUATION SIGNAL	MAXIMUM CLOSURE TIME (SEC.)	VALVE POSITION					APPENDIX J REQUIREMENT
										NORMAL	SHUTDOWN	FAIL	PRIMARY	SECONDARY	
EMHV-8964	¾/¾	OUTSIDE	OUT	GLOBE	AIR	1	CIS-A	NONE	10	CLOSED	CLOSED	CLOSED	CLOSED	N/A	C
EMV-153	¾/¾	INSIDE	N/A	GLOBE	MANUAL	N/A	N/A	N/A	N/A	CLOSED	CLOSED	N/A	CLOSED	N/A	N/A
EMHV-8871	¾/¾	INSIDE	OUT	GLOBE	AIR	4	CIS-A	NONE	10	CLOSED	CLOSED	CLOSED	CLOSED	N/A	C
EMV-038	¾/¾	OUTSIDE	N/A	GLOBE	MANUAL	N/A	N/A	N/A	N/A	CLOSED	CLOSED	N/A	CLOSED	N/A	N/A

ASSOCIATED WITH A SAFETY FEATURES SYS. YES ☐ NO ☒

FLUID CONTAINED: WATER

LENGTH OF PIPING TO OUTERMOST ISOLATION VALVE: 16.7 ft

APPLICABLE GDC NO. 56

GENERAL COMMENTS:

NONE

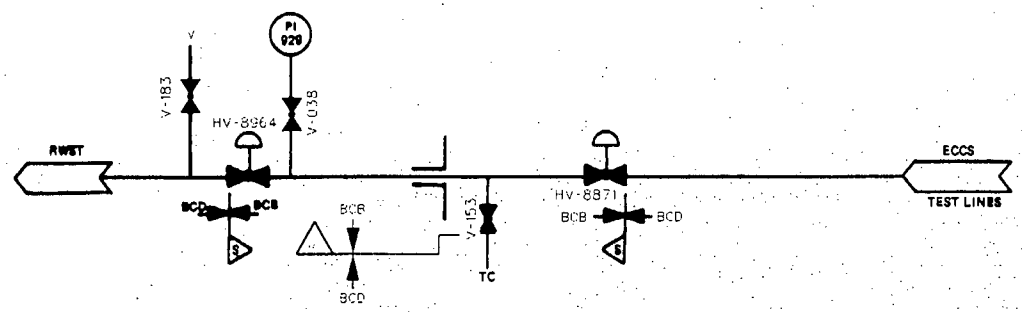

CONTAINMENT PENETRATION NO. P-93
DESCRIPTION:
ECCS TEST LINE RETURN
HIGH PRESSURE COOLANT INJECTION SYSTEM
REFERENCE SECTION(S) 6.3
REV. 13

WOLF CREEK
UPDATED SAFETY ANALYSIS REPORT

CONTAINMENT PENETRATIONS
FIGURE 6.2.4-1
PAGE 66 OF 74

VALVE NO.	LINE/ VALVE SIZE, IN.	INSIDE/ OUTSIDE CONT.	NORMAL FLOW DIRECTION	VALVE TYPE	VALVE OPERATOR	POWER SOURCE	PRIMARY ACTUATION SIGNAL	SECONDARY ACTUATION SIGNAL	MAXIMUM CLOSURE TIME (SEC.)	VALVE POSITION					APPENDIX J REQUIREMENT
										NORMAL	SHUTDOWN	FAIL	PRIMARY	SECONDARY	
SJHV-5	1/1	INSIDE	OUT	GLOBE	SOLENOID	4	CIS-A	NONE	5	OPEN	CLOSED	CLOSED	CLOSED	N/A	C
SJHV-6	1/1	OUTSIDE	OUT	GLOBE	SOLENOID	1	CIS-A	NONE	5	OPEN	CLOSED	CLOSED	CLOSED	N/A	C
SJV-069	1/1	OUTSIDE	N/A	GLOBE	MANUAL	N/A	N/A	N/A	N/A	CLOSED	CLOSED	N/A	CLOSED	N/A	N/A
SJHV-127	1/1	OUTSIDE	OUT	GLOBE	SOLENOID	4	CIS-A	NONE	5	CLOSED	CLOSED	CLOSED	CLOSED	N/A	C

ASSOCIATED WITH A SAFETY FEATURES SYS. YES ☐ NO ☒

FLUID CONTAINED: WATER

LENGTH OF PIPING TO OUTERMOST ISOLATION VALVE: 10.3 ft

APPLICABLE GDC NO. 55

GENERAL COMMENTS:

NONE

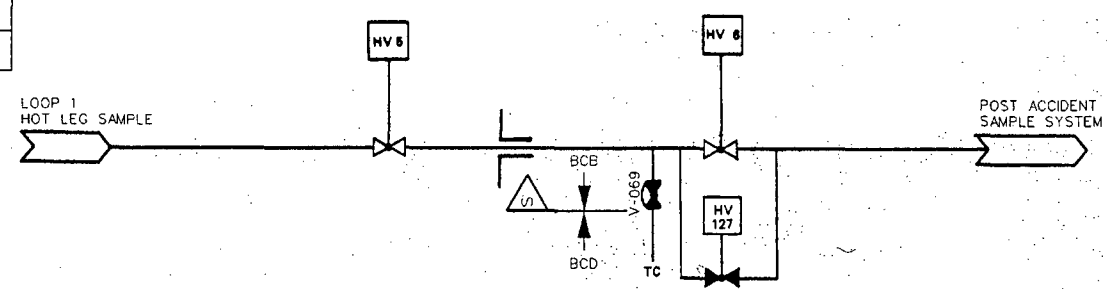

CONTAINMENT PENETRATION NO. P-93
DESCRIPTION:
PRESSURIZER LIQUID SAMPLE LINE
NUCLEAR SAMPLING SYSTEM

REFERENCE SECTION(S) 9.8.2
REV. 13

WOLF CREEK
UPDATED SAFETY ANALYSIS REPORT

CONTAINMENT PENETRATIONS
FIGURE 6.2.4-1
PAGE 67 OF 74

VALVE NO.	LINE/ VALVE SIZE, IN.	INSIDE/ OUTSIDE CONT.	NORMAL FLOW DIRECTION	VALVE TYPE	VALVE OPERATOR	POWER SOURCE	PRIMARY ACTUATION SIGNAL	SECONDARY ACTUATION SIGNAL	MAXIMUM CLOSURE TIME (SEC.)	VALVE POSITION					APPENDIX J REQUIREMENT
										NORMAL	SHUTDOWN	FAIL	PRIMARY	SECONDARY	
SJHV-18	1/1	INSIDE	OUT	GATE	SOLENOID	4	CIS-A	NONE	5	CLOSED	CLOSED	CLOSED	CLOSED	N/A	C
SJHV-19	1/1	OUTSIDE	OUT	GATE	SOLENOID	1	CIS-A	NONE	5	CLOSED	CLOSED	CLOSED	CLOSED	N/A	C
SJV-066	1/1	OUTSIDE	N/A	GLOBE	MANUAL	N/A	N/A	N/A	N/A	CLOSED	CLOSED	N/A	CLOSED	N/A	N/A

ASSOCIATED WITH A SAFETY FEATURES SYS. YES ☐ NO ☒

FLUID CONTAINED: WATER

LENGTH OF PIPING TO OUTERMOST ISOLATION VALVE: 10.3 ft

APPLICABLE GDC NO.: 55

GENERAL COMMENTS:

NONE

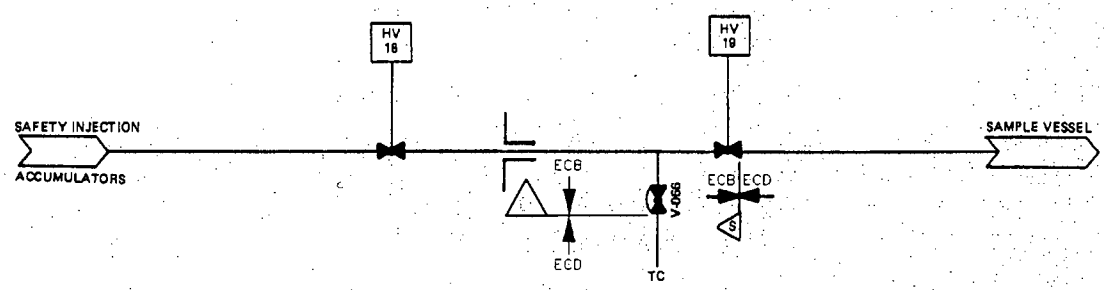

CONTAINMENT PENETRATION NO. P-95
DESCRIPTION:
ACCUMULATOR SAMPLING
NUCLEAR SAMPLING SYSTEM

REFERENCE SECTION(S) 9.3.2
REV. 13

WOLF CREEK
UPDATED SAFETY ANALYSIS REPORT

CONTAINMENT PENETRATIONS
FIGURE 6.2.4-1
PAGE 68 OF 74

VALVE NO.	LINE/ VALVE SIZE, IN.	INSIDE/ OUTSIDE CONT.	NORMAL FLOW DIRECTION	VALVE TYPE	VALVE OPERATOR	POWER SOURCE	PRIMARY ACTUATION SIGNAL	SECONDARY ACTUATION SIGNAL	MAXIMUM CLOSURE TIME (SEC.)	VALVE POSITION					APPENDIX J REQUIREMENT
										NORMAL	SHUTDOWN	FAIL	PRIMARY	SECONDARY	
GSHV-18	1/1	INSIDE	IN	GATE	SOLENOID	1	CIS-A	REM/MAN	5	CLOSED	CLOSED	CLOSED	CLOSED	OPEN	A,C
GSHV-17	1/1	OUTSIDE	IN	GATE	SOLENOID	1	CIS-A	REM/MAN	5	CLOSED	CLOSED	CLOSED	CLOSED	OPEN	A,C
GSV-036	1/1	OUTSIDE	N/A	GLOBE	MANUAL	N/A	N/A	N/A	N/A	CLOSED	CLOSED	N/A	CLOSED	N/A	N/A

ASSOCIATED WITH A SAFETY FEATURES SYS. YES [X] NO [ ]

FLUID CONTAINED: CONT. AIR

LENGTH OF PIPING TO OUTERMOST ISOLATION VALVE: N/A

APPLICABLE GDC NO. 56

GENERAL COMMENTS:

THIS PENETRATION IS ASSOCIATED WITH *THE POST-ACCIDENT SAMPLING SYSTEM* AND THE CONTAINMENT HYDROGEN CONTROL SYSTEM, WHICH IS REQUIRED TO MITIGATE THE CONSEQUENCES OF A LOCA.

THE HYDROGEN ANALYZER **IS A CLOSED SYSTEM OUTSIDE THE CONTAINMENT WHICH IS DESIGNED AND CONSTRUCTED COMMENSURATE WITH THE DESIGN AND CONSTRUCTION OF THE CONTAINMENT.**

TO ASSURE LEAKTIGHT INTEGRITY, THE VALVES ARE SUBJECTED TO TYPE C TESTING, AND THE SAMPLE LINES ARE OPENED DURING THE TYPE A TESTING.

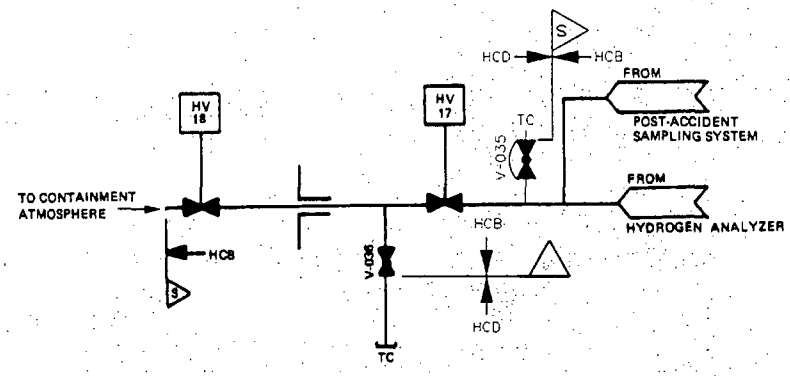

CONTAINMENT PENETRATION NO. P-97
DESCRIPTION:
H_2 SAMPLE RETURN
HYDROGEN CONTROL SYSTEM

REFERENCE SECTION(S) 6.2.5
REV. 13

WOLF CREEK
UPDATED SAFETY ANALYSIS REPORT

CONTAINMENT PENETRATIONS
FIGURE 6.2.4-1
PAGE 69 OF 74

VALVE NO.	LINE/ VALVE SIZE, IN.	INSIDE/ OUTSIDE CONT.	NORMAL FLOW DIRECTION	VALVE TYPE	VALVE OPERATOR	POWER SOURCE	PRIMARY ACTUATION SIGNAL	SECONDARY ACTUATION SIGNAL	MAXIMUM CLOSURE TIME (SEC.)	VALVE POSITION					APPENDIX J REQUIREMENT
										NORMAL	SHUTDOWN	FAIL	PRIMARY	SECONDARY	
GSHV-33	1/1	OUTSIDE	IN	GATE	SOLENOID	4	CIS-A	REM/MAN	5	OPEN	OPEN	CLOSED	CLOSED	OPEN	C
GSHV-34	1/1	INSIDE	IN	GATE	SOLENOID	1	CIS-A	REM/MAN	5	OPEN	OPEN	CLOSED	CLOSED	OPEN	C
GSV-052	1/1	OUTSIDE	N/A	GLOBE	MANUAL	N/A	N/A	N/A	N/A	CLOSED	CLOSED	N/A	CLOSED	N/A	N/A

ASSOCIATED WITH A SAFETY FEATURES SYS. YES ☐ NO ☒

FLUID CONTAINED: CONT. ATM

LENGTH OF PIPING TO OUTERMOST ISOLATION VALVE: 7.8 ft.

APPLICABLE GDC NO. 56

GENERAL COMMENTS: **NONE**

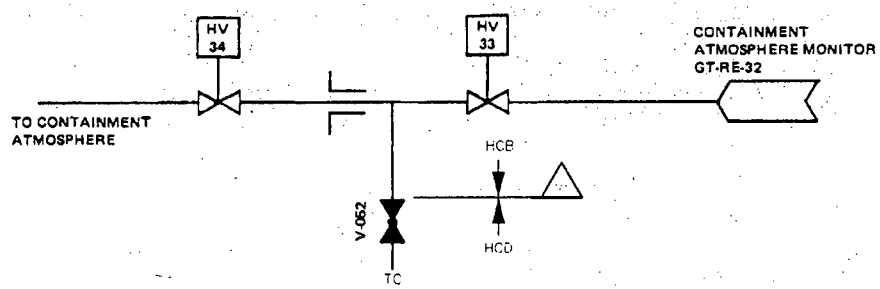

CONTAINMENT PENETRATION NO. P-97
DESCRIPTION:
SAMPLE RETURN
CONTAINMENT ATMOSPHERE MONITOR

REFERENCE SECTION(S) 9.4.6
REV. 13

WOLF CREEK
UPDATED SAFETY ANALYSIS REPORT

CONTAINMENT PENETRATIONS
FIGURE 6.2.4-1
PAGE 69a OF 74

VALVE NO.	LINE/ VALVE SIZE, IN.	INSIDE/ OUTSIDE CONT.	NORMAL FLOW DIRECTION	VALVE TYPE	VALVE OPERATOR	POWER SOURCE	PRIMARY ACTUATION SIGNAL	SECONDARY ACTUATION SIGNAL	MAXIMUM CLOSURE TIME (SEC.)	VALVE POSITION					APPENDIX J REQUIREMENT
										NORMAL	SHUTDOWN	FAIL	PRIMARY	SECONDARY	
KBV-001	2/2	INSIDE	IN	GLOBE	MANUAL	N/A	N/A	N/A	N/A	CLOSED	CLOSED	N/A	CLOSED	N/A	C
KBV-002	2/2	OUTSIDE	IN	GLOBE	MANUAL	N/A	N/A	N/A	N/A	CLOSED	CLOSED	N/A	CLOSED	N/A	C

ASSOCIATED WITH A SAFETY FEATURES SYS. YES ☐ NO ☒

FLUID CONTAINED: AIR

LENGTH OF PIPING TO OUTERMOST ISOLATION VALVE: 7.1 ft.

APPLICABLE GDC NO. 56

GENERAL COMMENTS:
NONE

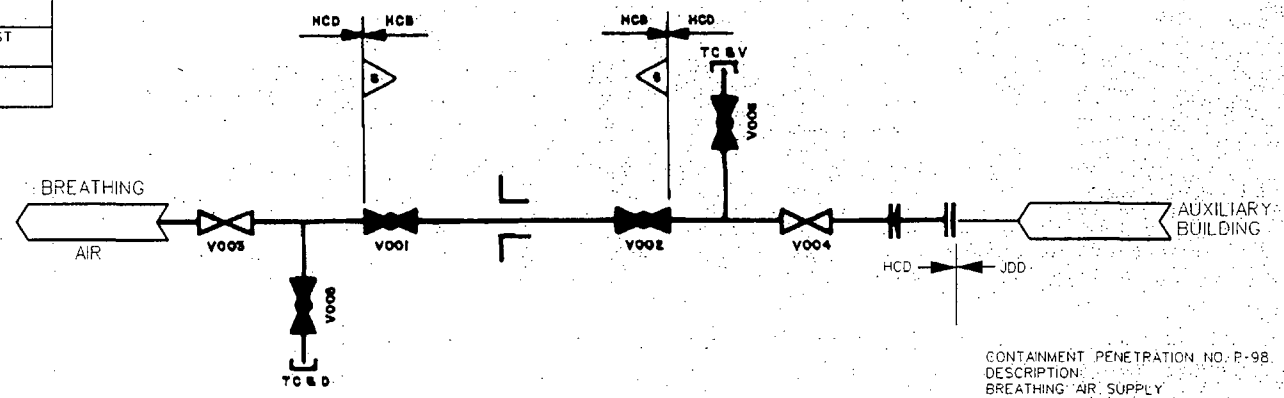

CONTAINMENT PENETRATION NO. P-98
DESCRIPTION:
BREATHING AIR SUPPLY

REFERENCE SECTION(S) 9.5.10
REV. 13

WOLF CREEK
UPDATED SAFETY ANALYSIS REPORT

CONTAINMENT PENETRATIONS
FIGURE 6.2.4-1
PAGE 69b OF 74

VALVE NO.	LINE/ VALVE SIZE, IN.	INSIDE/ OUTSIDE CONT.	NORMAL FLOW DIRECTION	VALVE TYPE	VALVE OPERATOR	POWER SOURCE	PRIMARY ACTUATION SIGNAL	SECONDARY ACTUATION SIGNAL	MAXIMUM CLOSURE TIME (SEC.)	VALVE POSITION					APPENDIX J REQUIREMENT
										NORMAL	SHUTDOWN	FAIL	PRIMARY	SECONDARY	
GSHV-3	1/1	OUTSIDE	OUT	GATE	SOLENOID	4	CIS-A	REM/MAN	5	CLOSED	CLOSED	CLOSED	CLOSED	OPEN	A,C
GSHV-4	1/1	INSIDE	OUT	GATE	SOLENOID	4	CIS-A	REM/MAN	5	CLOSED	CLOSED	CLOSED	CLOSED	OPEN	A,C
GSHV-5	1/1	INSIDE	OUT	GATE	SOLENOID	4	CIS-A	REM/MAN	5	CLOSED	CLOSED	CLOSED	CLOSED	OPEN	A,C
GSV-029	1/1	OUTSIDE	N/A	GLOBE	MANUAL	N/A	N/A	N/A	N/A	CLOSED	CLOSED	N/A	CLOSED	N/A	N/A

ASSOCIATED WITH A SAFETY FEATURES SYS. YES [X] NO [ ]

FLUID CONTAINED: CONT. ATM

LENGTH OF PIPING TO OUTERMOST ISOLATION VALVE: N/A

APPLICABLE GDC NO. 56

GENERAL COMMENTS:

THIS PENETRATION IS ASSOCIATED WITH THE POST-ACCIDENT SAMPLING SYSTEM AND THE CONTAINMENT HYDROGEN CONTROL SYSTEM, WHICH IS REQUIRED TO MITIGATE THE CONSEQUENCES OF A LOCA.

THE HYDROGEN ANALYZER IS A CLOSED SYSTEM OUTSIDE THE CONTAINMENT WHICH IS DESIGNED AND CONSTRUCTED COMMENSURATE WITH THE DESIGN AND CONSTRUCTION OF THE CONTAINMENT.

TO ASSURE LEAKTIGHT INTEGRITY, THE VALVES ARE SUBJECTED TO TYPE C TESTING, AND THE SAMPLE LINES ARE OPENED DURING THE TYPE A TESTING.

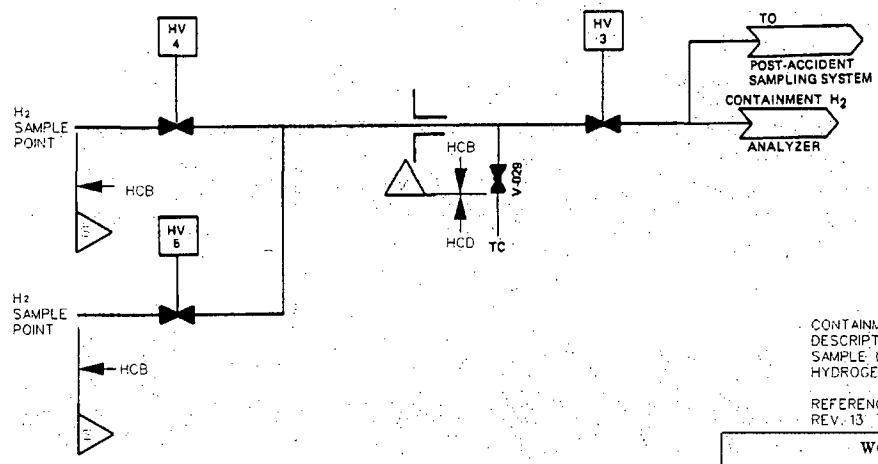

CONTAINMENT PENETRATION NO. P-99
DESCRIPTION:
SAMPLE LINE
HYDROGEN CONTROL SYSTEM

REFERENCE SECTION(S) 6.2
REV. 13

WOLF CREEK
UPDATED SAFETY ANALYSIS REPORT

CONTAINMENT PENETRATIONS
FIGURE 6.2.4-1
PAGE 70 OF 74

VALVE NO.	LINE/ VALVE SIZE, IN.	INSIDE/ OUTSIDE CONT.	NORMAL FLOW DIRECTION	VALVE TYPE	VALVE OPERATOR	POWER SOURCE	PRIMARY ACTUATION SIGNAL	SECONDARY ACTUATION SIGNAL	MAXIMUM CLOSURE TIME (SEC.)	VALVE POSITION					APPENDIX J REQUIREMENT
										NORMAL	SHUTDOWN	FAIL	PRIMARY	SECONDARY	
GSHV-36	1/1	INSIDE	OUT	GATE	SOLENOID	4	CIS-A	REM/MAN	5	OPEN	OPEN	CLOSED	CLOSED	OPEN	C
GSHV-37	1/1	OUTSIDE	OUT	GATE	SOLENOID	1	CIS-A	REM/MAN	5	OPEN	OPEN	CLOSED	CLOSED	OPEN	C
GSV-056	1/1	OUTSIDE	N/A	GLOBE	MANUAL	N/A	N/A	N/A	N/A	CLOSED	CLOSED	N/A	CLOSED	N/A	N/A

ASSOCIATED WITH A SAFETY FEATURES SYS. YES [X] NO [ ]

FLUID CONTAINED: CONT. AIR

LENGTH OF PIPING TO OUTERMOST ISOLATION VALVE:

APPLICABLE GDC NO. 56

GENERAL COMMENTS: NONE

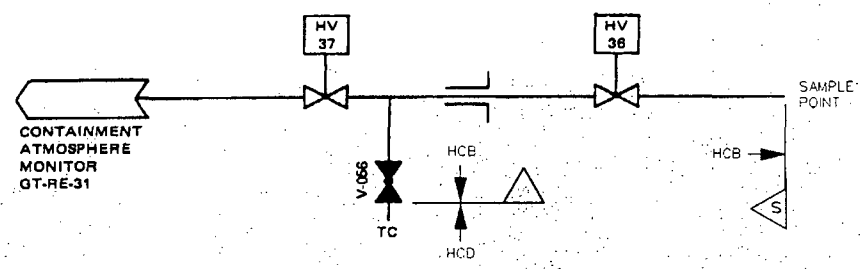

CONTAINMENT PENETRATION NO. P-99
DESCRIPTION:
SAMPLE LINE
CONTAINMENT ATMOSPHERE MONITOR

REFERENCE SECTION(S) 9.4.6
REV. 13

WOLF CREEK
UPDATED SAFETY ANALYSIS REPORT

CONTAINMENT PENETRATIONS
FIGURE 6.2.4-1
PAGE 70a OF 74

VALVE NO.	LINE/ VALVE SIZE, IN.	INSIDE/ OUTSIDE CONT.	NORMAL FLOW DIRECTION	VALVE TYPE	VALVE OPERATOR	POWER SOURCE	PRIMARY ACTUATION SIGNAL	SECONDARY ACTUATION SIGNAL	MAXIMUM CLOSURE TIME (SEC.)	VALVE POSITION					APPENDIX J REQUIREMENT
										NORMAL	SHUTDOWN	FAIL	PRIMARY	SECONDARY	
GSHV-12	1/1	OUTSIDE	OUT	GATE	SOLENOID	1	CIS-A	REM/MAN	5	CLOSED	CLOSED	CLOSED	CLOSED	OPEN	A,C
GSHV-13	1/1	INSIDE	OUT	GATE	SOLENOID	1	CIS-A	REM/MAN	5	CLOSED	CLOSED	CLOSED	CLOSED	OPEN	A,C
GSHV-14	1/1	INSIDE	OUT	GATE	SOLENOID	1	CIS-A	REM/MAN	5	CLOSED	CLOSED	CLOSED	CLOSED	OPEN	A,C
GSV-033	1/1	OUTSIDE	N/A	GLOBE	MANUAL	N/A	N/A	N/A	N/A	CLOSED	CLOSED	N/A	CLOSED	N/A	N/A

ASSOCIATED WITH A SAFETY FEATURES SYS. YES ☒ NO ☐

FLUID CONTAINED: CONT. ATM:

LENGTH OF PIPING TO OUTERMOST ISOLATION VALVE: N/A

APPLICABLE GDC NO. 56

GENERAL COMMENTS:

THIS PENETRATION IS ASSOCIATED WITH THE POST-ACCIDENT SAMPLING SYSTEM AND THE CONTAINMENT HYDROGEN CONTROL SYSTEM, WHICH IS REQUIRED TO MITIGATE THE CONSEQUENCES OF A LOCA.

THE HYDROGEN ANALYZER **IS A CLOSED SYSTEM OUTSIDE THE CONTAINMENT WHICH IS DESIGNED AND CONSTRUCTED COMMENSURATE WITH THE DESIGN AND CONSTRUCTION OF THE CONTAINMENT.**

TO ASSURE LEAKTIGHT INTEGRITY, THE VALVES ARE SUBJECTED TO TYPE C TESTING, AND THE SAMPLE LINES ARE OPENED DURING THE TYPE A TESTING.

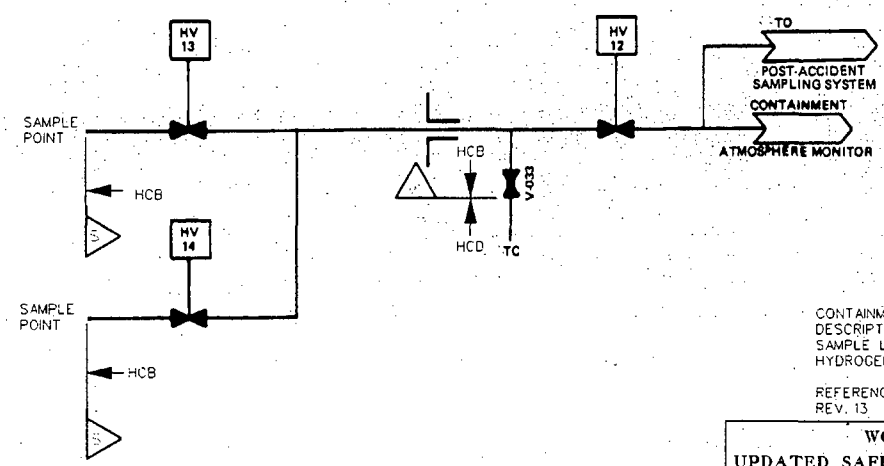

CONTAINMENT PENETRATION NO. P-101
DESCRIPTION:
SAMPLE LINE
HYDROGEN CONTROL SYSTEM

REFERENCE SECTION(S) 6.2.5
REV. 13

WOLF CREEK
UPDATED SAFETY ANALYSIS REPORT

CONTAINMENT PENETRATIONS
FIGURE 6.2.4-1
PAGE 71 OF 74

VALVE NO	LINE/ VALVE SIZE, IN.	INSIDE/ OUTSIDE CONT.	NORMAL FLOW DIRECTION	VALVE TYPE	VALVE OPERATOR	POWER SOURCE	PRIMARY ACTUATION SIGNAL	SECONDARY ACTUATION SIGNAL	MAXIMUM CLOSURE TIME (SEC.)	VALVE POSITION					APPENDIX J REQUIREMENT
										NORMAL	SHUTDOWN	FAIL	PRIMARY	SECONDARY	
GSHV-31	1/1	INSIDE	OUT	GATE	SOLENOID	1	CIS-A	REM/MAN	5	OPEN	OPEN	CLOSED	CLOSED	OPEN	C
GSHV-32	1/1	OUTSIDE	OUT	GATE	SOLENOID	4	CIS-A	REM/MAN	5	OPEN	OPEN	CLOSED	CLOSED	OPEN	C
GSV-050	1/1	OUTSIDE	N/A	GLOBE	MANUAL	N/A	N/A	N/A	N/A	CLOSED	CLOSED	N/A	CLOSED	N/A	N/A

ASSOCIATED WITH A SAFETY FEATURES SYS. YES ☐ NO ☒

FLUID CONTAINED: CONT. ATM.

LENGTH OF PIPING TO OUTERMOST ISOLATION VALVE: LATER

APPLICABLE GDC NO. 56

GENERAL COMMENTS: NONE

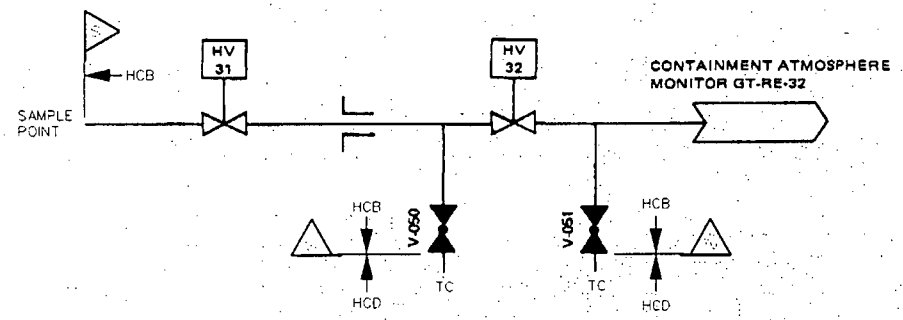

CONTAINMENT PENETRATION NO. P-101
DESCRIPTION:
SAMPLE LINE
CONTAINMENT ATMOSPHERE MONITOR

REFERENCE SECTION(S) 9.4.6
REV: 11

WOLF CREEK
UPDATED SAFETY ANALYSIS REPORT

CONTAINMENT PENETRATIONS
FIGURE 6.2.4-1
PAGE 71a OF 74

VALVE NO.	LINE/ VALVE SIZE, IN.	INSIDE/ OUTSIDE CONT	NORMAL FLOW DIRECTION	VALVE TYPE	VALVE OPERATOR	POWER SOURCE	PRIMARY ACTUATION SIGNAL	SECONDARY ACTUATION SIGNAL	MAXIMUM CLOSURE TIME (SEC)	VALVE POSITION					APPENDIX J REQUIREMENT
										NORMAL	SHUTDOWN	FAIL	PRIMARY	SECONDARY	
PRESSURE TRANSMITTER	N/A	N/A	N/A	N/A	N/A	N/A	N/A	N/A	N/A	N/A	N/A	N/A	N/A	N/A	A

ASSOCIATED WITH A SAFETY FEATURES SYS. YES [X] NO [ ]

FLUID CONTAINED: DOW CORNING D C 702 PURIFIED AND SUPPLIED BY WESTINGHOUSE

LENGTH OF PIPING TO OUTERMOST ISOLATION VALVE: N/A

APPLICABLE GDC NO. 56

GENERAL COMMENTS:

PT-934, 935, 936 AND 937

THERE ARE FOUR INSTRUMENT LINES WHICH PENETRATE THE CONTAINMENT AND WHICH ARE REQUIRED TO REMAIN FUNCTIONAL FOLLOWING A LOCA OR STEAM BREAK. THESE LINES SENSE THE PRESSURE OF CONTAINMENT ATMOSPHERE ON THE INSIDE AND ARE CONNECTED TO PRESSURE TRANSMITTERS ON THE OUTSIDE. SIGNALS FROM THESE TRANSMITTERS CAN INITIATE SAFETY INJECTION AND CONTAINMENT ISOLATION ON HIGH CONTAINMENT PRESSURE. THEY ALSO, UPON HI-HI CONTAINMENT PRESSURE, PRODUCE THE ONLY SIGNAL TO INITIATE CONTAINMENT SPRAY. IN VIEW OF THIS FUNCTION, IT IS ESSENTIAL THAT THE LINE REMAIN OPEN AND NOT BE ISOLATED FOLLOWING AN ACCIDENT. BASED ON THIS REQUIREMENT, A SEALED SENSING LINE, AS DESCRIBED BELOW, IS USED.

PT-938 AND PT-939 ARE THE WIDE RANGE CONTAINMENT PRESSURE TRANSMITTERS REQUIRED BY NUREG-0737 AND REGULATORY GUIDE 1.97.

EACH OF THE FOUR CHANNELS HAS A SEPARATE PENETRATION, AND EACH PRESSURE TRANSMITTER IS LOCATED IMMEDIATELY ADJACENT TO THE OUTSIDE OF THE CONTAINMENT WALL. IT IS CONNECTED TO A SEALED BELLOWS, LOCATED IMMEDIATELY ADJACENT TO THE INSIDE CONTAINMENT WALL, BY MEANS OF A SEALED FLUID FILLED TUBE. THIS TUBING, ALONG WITH THE TRANSMITTER AND BELLOWS, IS CONSERVATIVELY DESIGNED AND SUBJECT TO STRICT QUALITY CONTROL AND TO REGULAR IN-SERVICE INSPECTIONS TO ASSURE ITS INTEGRITY. THIS ARRANGEMENT PROVIDES A DOUBLE BARRIER (ONE INSIDE AND ONE OUTSIDE) BETWEEN THE CONTAINMENT AND THE OUTSIDE ATMOSPHERE. SHOULD A LEAK OCCUR OUTSIDE THE CONTAINMENT, THE SEALED BELLOWS INSIDE THE CONTAINMENT, WHICH IS DESIGNED TO WITHSTAND FULL CONTAINMENT DESIGN PRESSURE, WILL PREVENT THE ESCAPE OF THE CONTAINMENT ATMOSPHERE. SHOULD A LEAK OCCUR INSIDE THE CONTAINMENT, THE DIAPHRAGM IN THE TRANSMITTER, WHICH IS DESIGNED TO WITHSTAND FULL CONTAINMENT DESIGN PRESSURE, WILL PREVENT ANY ESCAPE FROM THE CONTAINMENT. THIS ARRANGEMENT PROVIDES AUTOMATIC DOUBLE-BARRIER ISOLATION WITHOUT OPERATOR ACTION AND WITHOUT SACRIFICING ANY RELIABILITY. BOTH THE BELLOWS AND TUBING INSIDE THE CONTAINMENT ARE ENCLOSED BY PROTECTIVE SHIELDING. THIS SHIELDING (BOX, CHANNEL OR GUARD PIPE, ETC.) PREVENT MECHANICAL DAMAGE TO THE COMPONENTS FROM MISSILES, WATER JETS, DROPPED TOOLS, ETC.

BECAUSE OF THIS SEALED FLUID FILLED SYSTEM, A POSTULATED SEVERANCE OF THE LINE DURING EITHER NORMAL OPERATION OR ACCIDENT CONDITIONS WILL NOT RESULT IN ANY RELEASE FROM THE CONTAINMENT.

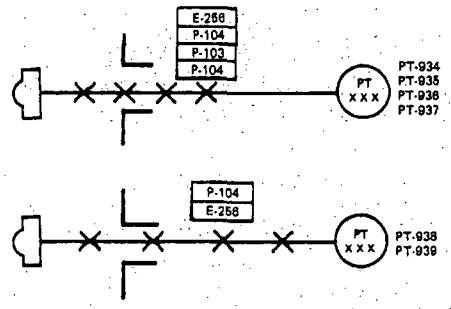

CONTAINMENT PENETRATION NO. P-103 & E-256
DESCRIPTION:

CONTAINMENT PRESSURE TRANSMITTERS

REFERENCE SECTION(S) 6.3, 9.4
REV. 11

WOLF CREEK
UPDATED SAFETY ANALYSIS REPORT

CONTAINMENT PENETRATIONS
FIGURE 6.2.4-1
PAGE 72 OF 74

VALVE NO.	LINE/ VALVE SIZE, IN.	INSIDE/ OUTSIDE CONT.	NORMAL FLOW DIRECTION	VALVE TYPE	VALVE OPERATOR	POWER SOURCE	PRIMARY ACTUATION SIGNAL	SECONDARY ACTUATION SIGNAL	MAXIMUM CLOSURE TIME (SEC.)	VALVE POSITION					APPENDIX J REQUIREMENT
										NORMAL	SHUTDOWN	FAIL	PRIMARY	SECONDARY	
GTHZ-9	36/36	OUTSIDE	OUT	BUTTERFLY	AIR/SPR	1	CPIS	NONE	10	CLOSED	OPEN	CLOSED	CLOSED	N/A	C
GTHZ-8	36/36	INSIDE	OUT	BUTTERFLY	AIR/SPR	4	CPIS	NONE	10	CLOSED	OPEN	CLOSED	CLOSED	N/A	C
GTHZ-12	18/18	OUTSIDE	OUT	BUTTERFLY	AIR/SPR	1	CPIS	NONE	3	NOTE 1	CLOSED	CLOSED	CLOSED	N/A	C
GTHZ-11	18/18	INSIDE	OUT	BUTTERFLY	AIR/SPR	4	CPIS	NONE	3	NOTE 1	CLOSED	CLOSED	CLOSED	N/A	C
GTV0223	1/1	OUTSIDE	N/A	GATE	MANUAL	N/A	N/A	N/A	N/A	CLOSED	CLOSED	N/A	CLOSED	N/A	N/A

ASSOCIATED WITH A SAFETY FEATURES SYS: YES ☐ NO ☒

FLUID CONTAINED: CONT. ATM.

LENGTH OF PIPING TO OUTERMOST ISOLATION VALVE: 12.0 ft

APPLICABLE GDC NO 56

GENERAL COMMENTS:

NOTE 1

THIS VALVE IS INTERMITTENTLY OPENED TO PROVIDE FOR CONTAINMENT MINI-PURGE DURING POWER OPERATION

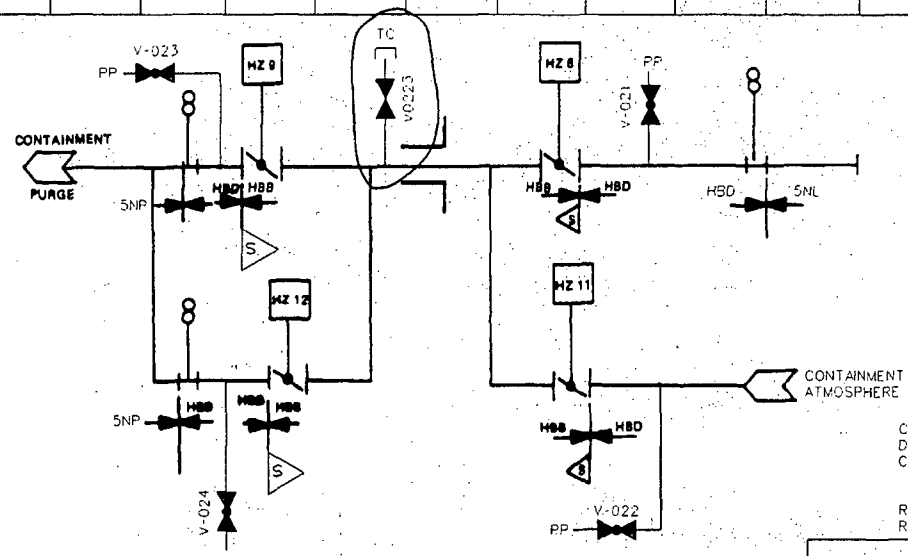

CONTAINMENT PENETRATION NO. V-160
DESCRIPTION:
CONTAINMENT PURGE SYSTEM

REFERENCE SECTION(S) 9.4
REV. 13

WOLF CREEK
UPDATED SAFETY ANALYSIS REPORT

CONTAINMENT PENETRATIONS
FIGURE 6.2.4-1
PAGE 73 OF 74

VALVE NO.	LINE/ VALVE SIZE, IN.	INSIDE/ OUTSIDE CONT.	NORMAL FLOW DIRECTION	VALVE TYPE	VALVE OPERATOR	POWER SOURCE	PRIMARY ACTUATION SIGNAL	SECONDARY ACTUATION SIGNAL	MAXIMUM CLOSURE TIME (SEC.)	VALVE POSITION					APPENDIX J REQUIREMENT
										NORMAL	SHUTDOWN	FAIL	PRIMARY	SECONDARY	
GTHZ-7	36/36	INSIDE	IN	BUTTERFLY	AIR/SPR	1	CPIS	NONE	10	CLOSED	OPEN	CLOSED	CLOSED	N/A	C
GTHZ-5	18/18	INSIDE	IN	BUTTERFLY	AIR/SPR	1	CPIS	NONE	3	NOTE 1	CLOSED	CLOSED	CLOSED	N/A	C
GTHZ-4	18/18	OUTSIDE	IN	BUTTERFLY	AIR/SPR	4	CPIS	NONE	3	NOTE 1	CLOSED	CLOSED	CLOSED	N/A	C
GTHZ-6	36/36	OUTSIDE	IN	BUTTERFLY	AIR/SPR	4	CPIS	NONE	10	CLOSED	OPEN	CLOSED	CLOSED	N/A	C
GTV0222	1/1	OUTSIDE	N/A	GATE	MANUAL	N/A	N/A	N/A	N/A	CLOSED	CLOSED	N/A	CLOSED	N/A	N/A

ASSOCIATED WITH A SAFETY FEATURES SYS. YES ☐ NO ☒

FLUID CONTAINED: AIR

LENGTH OF PIPING TO OUTERMOST ISOLATION VALVE: 12.5 ft

APPLICABLE GDC NO. 56

GENERAL COMMENTS:

NOTE 1

THIS VALVE IS INTERMITTENTLY OPENED FOR PROVIDE FOR CONTAINMENT MINI-PURGE DURING POWER OPERATION

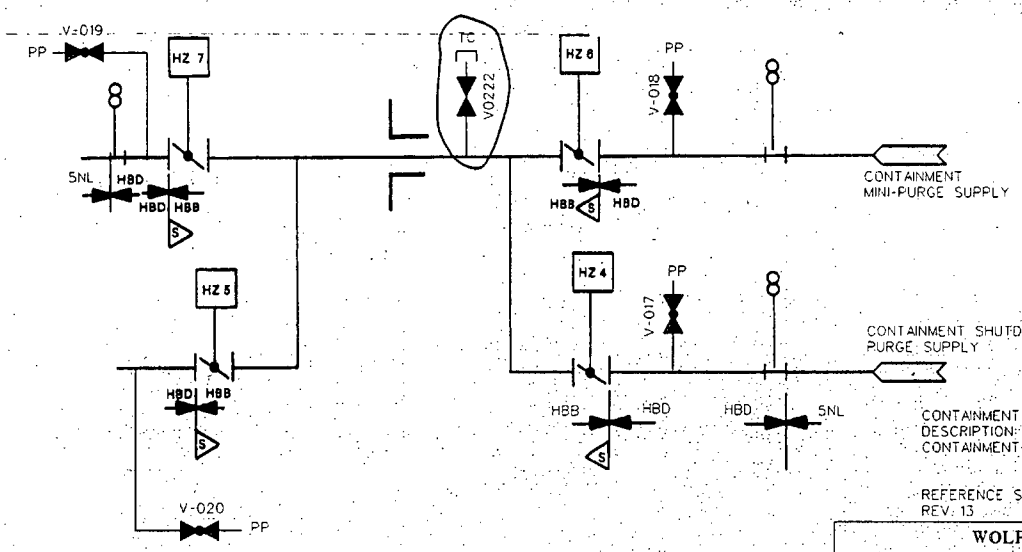

CONTAINMENT PENETRATION NO. V-161
DESCRIPTION:
CONTAINMENT PURGE SYSTEM

REFERENCE SECTION(S) 9.4
REV. 13

WOLF CREEK
UPDATED SAFETY ANALYSIS REPORT

CONTAINMENT PENETRATIONS
FIGURE 6.2.4-1
PAGE 7.4 OF 7.4

*

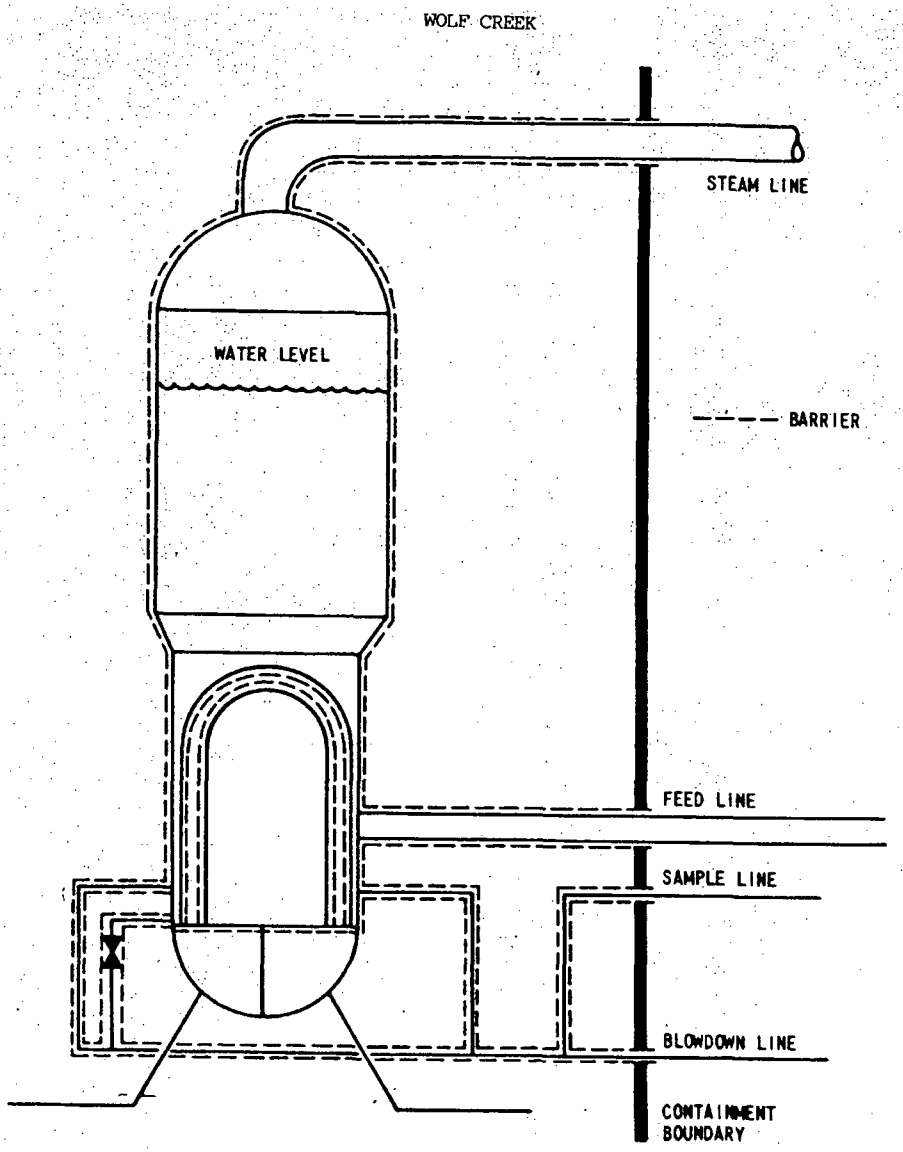

Rev. 0

WOLF CREEK
UPDATED SAFETY ANALYSIS REPORT

FIGURE 6.2.4-2

STEAM GENERATOR AND ASSOCIATED SYSTEMS AS A BARRIER TO THE RELEASE OF RADIOACTIVITY POST LOCA

APPENDIX D

TECHNICAL SPECIFICATION CATEGORY IDENTIFICATION

Table D-1: Penetration Flow Paths Connected to Containment Atmosphere

Table D-2: Penetration Flow Paths Connected to the RCS

Table D-3: Penetration Flow Paths Connected to the SGs

*Please note, the information contained within Tables D-1, D-2 and D-3 is directly from Tables 8-2, 8-3 and 8-4. Tables D-1, D-2 and D-3 are shown to facilitate implementing the information into tech specs.

Table D-1 Tech Spec Category Identification: Class I - Penetration Flow Paths Connected to Containment Atmosphere

Calculation Number and Group	Penetration Description	Penetration Type	Valve Type Basis (see item 7 of Section 8.2)	Applicable Tech Spec 3.6.3 Condition (A or B)[1]	Completion Time (CT) Category Number	Justified CT
1. Group I,A (see Section 8.2.2.1)	2 valves - normally closed - same valve type	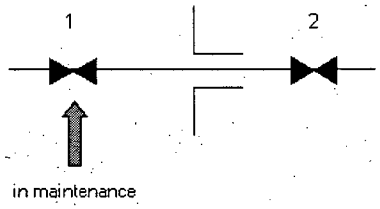	all	A B	4 11	24 hrs 24 hrs
		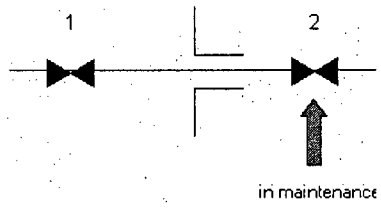	all	A B	4 11	24 hrs 24 hrs
2. Group I,A (see Section 8.2.2.1)	2 valves - normally closed - different valve type	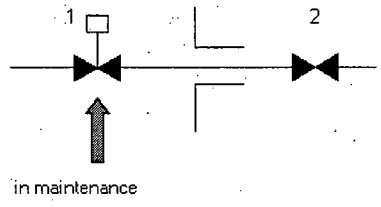	all	A B	7 14	168 hrs 168 hrs

Table D-1 (cont.) Tech Spec Category Identification: Class I - Penetration Flow Paths Connected to Containment Atmosphere

Calculation Number and Group	Penetration Description	Penetration Type	Valve Type Basis (see item 7 of Section 8.2)	Applicable Tech Spec 3.6.3 Condition (A or B)[1]	Completion Time (CT) Category Number	Justified CT
		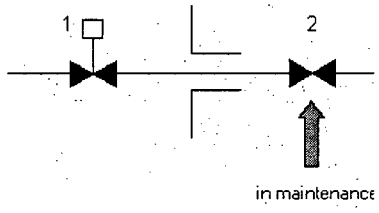	all	A B	7 14	168 hrs 168 hrs
3. Group I,A (see Section 8.2.2.1)	2 valves - normally open - same valve type	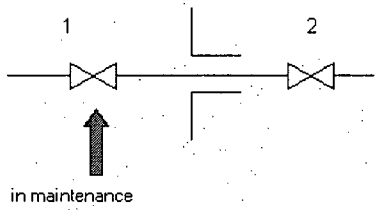	SOV MOV AOV Check SRV	A B A B A B A B A B	4 11 4 11 4 11 4 11 3 10	24 hrs 24 hrs 24 hrs 24 hrs 24 hrs 24 hrs 24 hrs 24 hrs 12 hrs 12 hrs

Table D-1 (cont.) Tech Spec Category Identification: Class I - Penetration Flow Paths Connected to Containment Atmosphere

Calculation Number and Group	Penetration Description	Penetration Type	Valve Type Basis (see item 7 of Section 8.2)	Applicable Tech Spec 3.6.3 Condition (A or B)[1]	Completion Time (CT) Category Number	Justified CT
		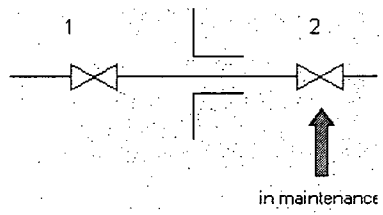	SOV	A B	4 11	24 hrs 24 hrs
			MOV	A B	4 11	24 hrs 24 hrs
			AOV	A B	4 11	24 hrs 24 hrs
			Check	A B	4 11	24 hrs 24 hrs
			SRV	A B	3 10	12 hrs 12 hrs
4. Group I,A (see Section 8.2.2.1)	2 valves - normally open - different valve type	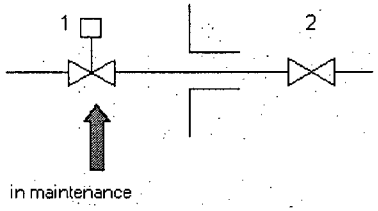	SOV	A B	7 14	168 hrs 168 hrs
			MOV	A B	7 14	168 hrs 168 hrs
			AOV	A B	7 14	168 hrs 168 hrs
			Check	A B	7 14	168 hrs 168 hrs
			SRV	A B	7 14	168 hrs 168 hrs

Table D-1 (cont.) Tech Spec Category Identification: Class I - Penetration Flow Paths Connected to Containment Atmosphere

Calculation Number and Group	Penetration Description	Penetration Type	Valve Type Basis (see item 7 of Section 8.2)	Applicable Tech Spec 3.6.3 Condition (A or B)[1]	Completion Time (CT) Category Number	Justified CT
		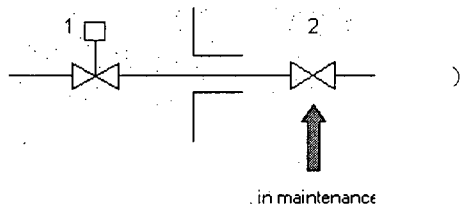	SOV	A B	7 14	168 hrs 168 hrs
			MOV	A B	7 14	168 hrs 168 hrs
			AOV	A B	7 14	168 hrs 168 hrs
			Check	A B	7 14	168 hrs 168 hrs
			SRV	A B	7 14	168 hrs 168 hrs
5. Group I,A (see Section 8.2.2.1)	2 valves IC or OC in parallel, normally closed – 1 valve OC or IC, normally closed – same valve type	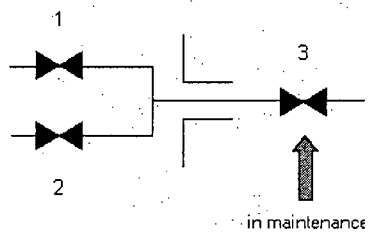	all	A B	3 10	12 hrs 12 hrs

Table D-1 (cont.) Tech Spec Category Identification: Class I - Penetration Flow Paths Connected to Containment Atmosphere

Calculation Number and Group	Penetration Description	Penetration Type	Valve Type Basis (see item 7 of Section 8.2)	Applicable Tech Spec 3.6.3 Condition (A or B)[1]	Completion Time (CT) Category Number	Justified CT
		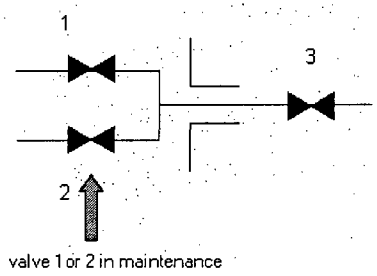	all	A B	4 11	24 hrs 24 hrs
6. Group I,A (see Section 8.2.2.1)	2 valves IC or OC in parallel, normally closed – 1 valve OC or IC, normally closed – different valve type	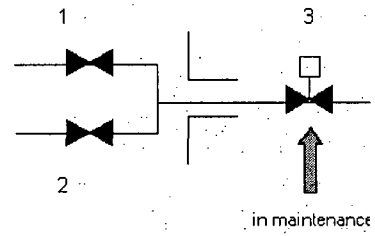	all	A B	7 14	168 hrs 168 hrs
		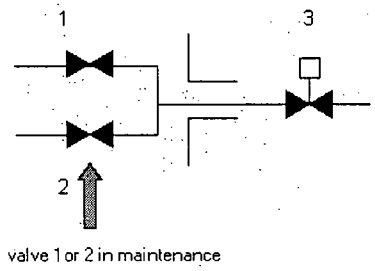	all	A B	7 14	168 hrs 168 hrs

Table D-1 (cont.) Tech Spec Category Identification: Class I - Penetration Flow Paths Connected to Containment Atmosphere

Calculation Number and Group	Penetration Description	Penetration Type	Valve Type Basis (see item 7 of Section 8.2)	Applicable Tech Spec 3.6.3 Condition (A or B)[1]	Completion Time (CT) Category Number	Justified CT
7. Group I,A (see Section 8.2.2.1)	2 valves IC or OC in parallel, normally open – 1 valve OC or IC, normally open – same valve type	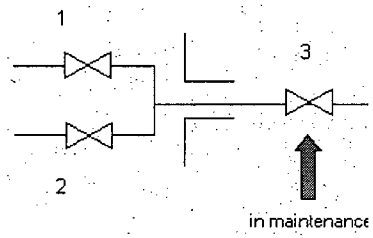	SOV	A B	3 10	12 hrs 12 hrs
			MOV	A B	3 10	12 hrs 12 hrs
			AOV	A B	3 10	12 hrs 12 hrs
			Check	A B	3 10	12 hrs 12 hrs
			SRV	A B	2 9	8 hrs 8 hrs
		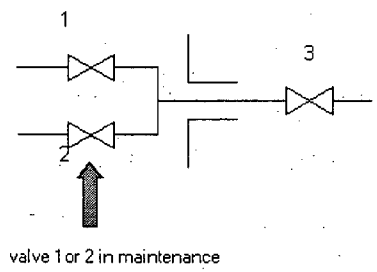	SOV	A B	4 11	24 hrs 24 hrs
			MOV	A B	4 11	24 hrs 24 hrs
			AOV	A B	4 11	24 hrs 24 hrs
			Check	A B	4 11	24 hrs 24 hrs
			SRV	A B	3 10	12 hrs 12 hrs

Table D-1 (cont.) Tech Spec Category Identification: Class I - Penetration Flow Paths Connected to Containment Atmosphere

Calculation Number and Group	Penetration Description	Penetration Type	Valve Type Basis (see item 7 of Section 8.2)	Applicable Tech Spec 3.6.3 Condition (A or B)[1]	Completion Time (CT) Category Number	Justified CT
8. Group I,A (see Section 8.2.2.1)	2 valves IC or OC in parallel, normally open – 1 valve OC or IC, normally open – different valve type	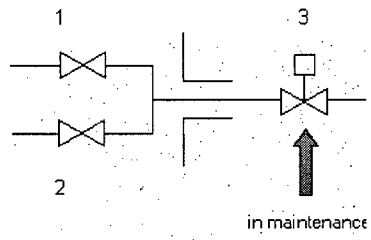	SOV	A B	6 13	72 hrs 72 hrs
			MOV	A B	7 14	168 hrs 168 hrs
			AOV	A B	6 13	72 hrs 72 hrs
			Check	A B	7 14	168 hrs 168 hrs
			SRV	A B	6 13	72 hrs 72 hrs
		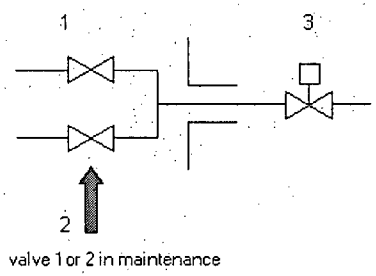	SOV	A B	7 14	168 hrs 168 hrs
			MOV	A B	7 14	168 hrs 168 hrs
			AOV	A B	7 14	168 hrs 168 hrs
			Check	A B	7 14	168 hrs 168 hrs
			SRV	A B	7 14	168 hrs 168 hrs

Table D-1 (cont.) **Tech Spec Category Identification: Class I - Penetration Flow Paths Connected to Containment Atmosphere**

Calculation Number and Group	Penetration Description	Penetration Type	Valve Type Basis (see item 7 of Section 8.2)	Applicable Tech Spec 3.6.3 Condition (A or B)[1]	Completion Time (CT) Category Number	Justified CT
9 Group I,A (see Section 8.2.2.1)	3 valves IC or OC in parallel, normally closed – 1 valve OC or IC, normally closed - same valve type	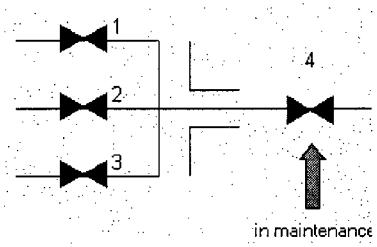	all	A B	3 10	12 hrs 12 hrs
		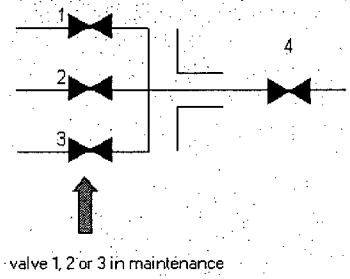	all	A B	4 11	24 hrs 24 hrs
10. Group I,A (see Section 8.2.2.1)	3 valves IC or OC in parallel, normally closed – 1 valve OC or IC, normally closed - different valve type	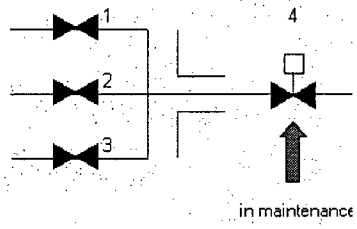	all	A B	7 14	168 hrs 168 hrs

Table D-1 (cont.) Tech Spec Category Identification: Class I - Penetration Flow Paths Connected to Containment Atmosphere

Calculation Number and Group	Penetration Description	Penetration Type	Valve Type Basis (see item 7 of Section 8.2)	Applicable Tech Spec 3.6.3 Condition (A or B)[1]	Completion Time (CT) Category Number	Justified CT
		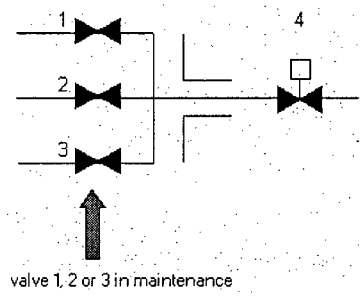	all	A B	7 14	168 hrs 168 hrs
11. Group I,A (see Section 8.2.2.1)	3 valves IC or OC in parallel, normally open – 1 valve OC or IC, normally open – same valve type	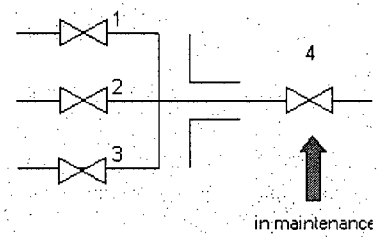	SOV MOV AOV Check SRV	A B A B A B A B A B	3 10 3 10 3 10 3 10 1 8	12 hrs 12 hrs 12 hrs 12 hrs 12 hrs 12 hrs 12 hrs 12 hrs 4 hrs 4 hrs

Table D-1 (cont.) Tech Spec Category Identification: Class I - Penetration Flow Paths Connected to Containment Atmosphere

Calculation Number and Group	Penetration Description	Penetration Type	Valve Type Basis (see item 7 of Section 8.2)	Applicable Tech Spec 3.6.3 Condition (A or B)[1]	Completion Time (CT) Category Number	Justified CT
		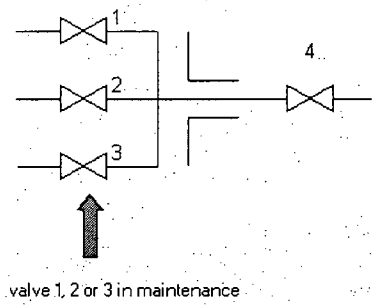	SOV	A B	4 11	24 hrs 24 hrs
			MOV	A B	4 11	24 hrs 24 hrs
			AOV	A B	4 11	24 hrs 24 hrs
			Check	A B	4 11	24 hrs 24 hrs
			SRV	A B	3 10	12 hrs 12 hrs
12. Group I,A (see Section 8.2.2:1)	3 valves IC or OC in parallel, normally open – 1 valve OC or IC, normally open – different valve type	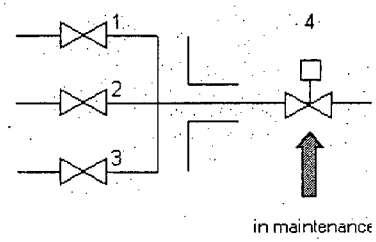	SOV	A B	6 13	72 hrs 72 hrs
			MOV	A B	6 13	72 hrs 72 hrs
			AOV	A B	6 13	72 hrs 72 hrs
			Check	A B	7 14	168 hrs 168 hrs
			SRV	A B	6 13	72 hrs 72 hrs

Table D-1 (cont.) Tech Spec Category Identification: Class I - Penetration Flow Paths Connected to Containment Atmosphere

Calculation Number and Group	Penetration Description	Penetration Type	Valve Type Basis (see item 7 of Section 8.2)	Applicable Tech Spec 3.6.3 Condition (A or B)[1]	Completion Time (CT) Category Number	Justified CT
		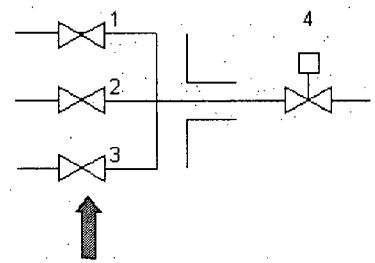	SOV	A B	7 14	168 hrs 168 hrs
			MOV	A B	7 14	168 hrs 168 hrs
			AOV	A B	7 14	168 hrs 168 hrs
			Check	A B	7 14	168 hrs 168 hrs
			SRV	A B	6 13	72 hrs 72 hrs
13. Group I,A (see Section 8.2.2.1)	2 valves – 1 normally closed, 1 normally open – same valve type	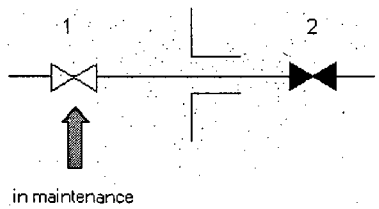	SOV	A B	7 14	168 hrs 168 hrs
			MOV	A B	7 14	168 hrs 168 hrs
			AOV	A B	7 14	168 hrs 168 hrs
			Check	A B	7 14	168 hrs 168 hrs
			SRV	A B	7 14	168 hrs 168 hrs

Table D-1 (cont.) Tech Spec Category Identification: Class I - Penetration Flow Paths Connected to Containment Atmosphere

Calculation Number and Group	Penetration Description	Penetration Type	Valve Type Basis (see item 7 of Section 8.2)	Applicable Tech Spec 3.6.3 Condition (A or B)[1]	Completion Time (CT) Category Number	Justified CT
		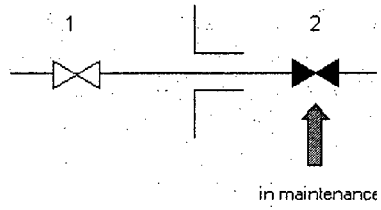	SOV	A B	7 14	168 hrs 168 hrs
			MOV	A B	7 14	168 hrs 168 hrs
			AOV	A B	7 14	168 hrs 168 hrs
			Check	A B	7 14	168 hrs 168 hrs
			SRV	A B	7 14	168 hrs 168 hrs
14. Group I,A (see Section 8.2.2.1)	2 valves – 1 normally closed, 1 normally open - different valve type	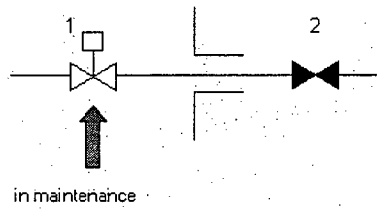	SOV	A B	7 14	168 hrs 168 hrs
			MOV	A B	7 14	168 hrs 168 hrs
			AOV	A B	7 14	168 hrs 168 hrs
			Check	A B	7 14	168 hrs 168 hrs
			SRV	A B	7 14	168 hrs 168 hrs

Table D-1 (cont.) Tech Spec Category Identification: Class I - Penetration Flow Paths Connected to Containment Atmosphere

Calculation Number and Group	Penetration Description	Penetration Type	Valve Type Basis (see item 7 of Section 8.2)	Applicable Tech Spec 3.6.3 Condition (A or B)[1]	Completion Time (CT) Category Number	Justified CT
		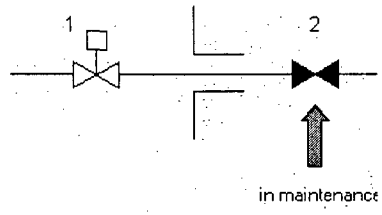	SOV	A B	7 14	168 hrs 168 hrs
			MOV	A B	7 14	168 hrs 168 hrs
			AOV	A B	7 14	168 hrs 168 hrs
			Check	A B	7 14	168 hrs 168 hrs
			SRV	A B	7 14	168 hrs 168 hrs
15. Group I,A (see Section 8.2.2.1)	2 valves IC in parallel, normally closed - 2 valves OC in parallel, normally closed - all same valve types	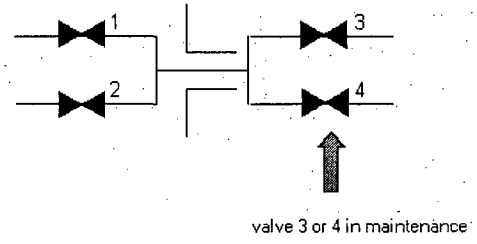	all	A B	3 10	12 hrs 12 hrs

Table D-1 (cont.) Tech Spec Category Identification: Class I - Penetration Flow Paths Connected to Containment Atmosphere

Calculation Number and Group	Penetration Description	Penetration Type	Valve Type Basis (see item 7 of Section 8.2)	Applicable Tech Spec 3.6.3 Condition (A or B)[1]	Completion Time (CT) Category Number	Justified CT
		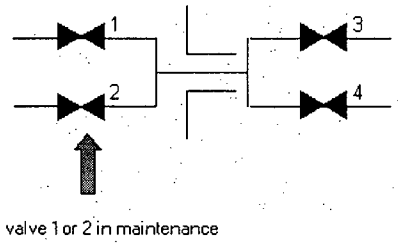	all	A B	3 10	12 hrs 12 hrs
16. Group I,A (see Section 8.2.2.1)	2 valves IC in parallel, 1 normally closed, 1 normally open - 2 valves OC in parallel, 1 normally closed, 1 normally open - all same valve types	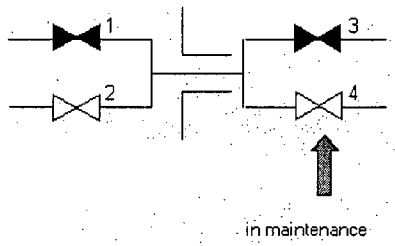	SOV MOV AOV Check SRV	A B A B A B A B A B	4 11 4 11 4 11 4 11 3 10	24 hrs 24 hrs 24 hrs 24 hrs 24 hrs 24 hrs 24 hrs 24 hrs 12 hrs 12 hrs

Table D-1 (cont.) Tech Spec Category Identification: Class I - Penetration Flow Paths Connected to Containment Atmosphere

Calculation Number and Group	Penetration Description	Penetration Type	Valve Type Basis (see item 7 of Section 8.2)	Applicable Tech Spec 3.6.3 Condition (A or B)[1]	Completion Time (CT) Category Number	Justified CT
		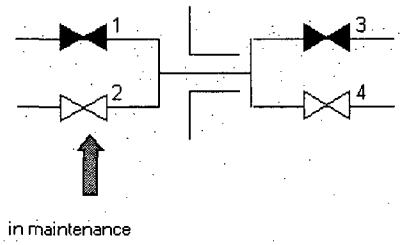	SOV	A B	4 11	24 hrs 24 hrs
			MOV	A B	4 11	24 hrs 24 hrs
			AOV	A B	4 11	24 hrs 24 hrs
			Check	A B	4 11	24 hrs 24 hrs
			SRV	A B	3 10	12 hrs 12 hrs
		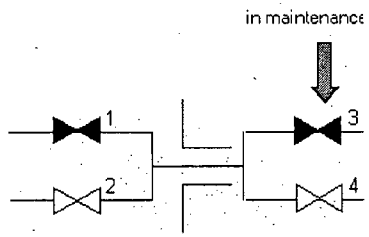	SOV	A B	4 11	24 hrs 24 hrs
			MOV	A B	4 11	24 hrs 24 hrs
			AOV	A B	4 11	24 hrs 24 hrs
			Check	A B	4 11	24 hrs 24 hrs
			SRV	A B	4 11	24 hrs 24 hrs

Table D-1 (cont.) Tech Spec Category Identification: Class I - Penetration Flow Paths Connected to Containment Atmosphere

Calculation Number and Group	Penetration Description	Penetration Type	Valve Type Basis (see item 7 of Section 8.2)	Applicable Tech Spec 3.6.3 Condition (A or B)[1]	Completion Time (CT) Category Number	Justified CT
		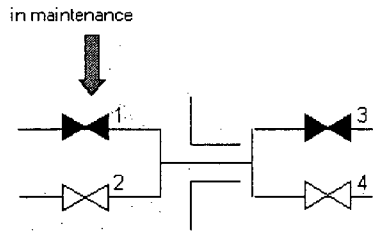	SOV	A B	4 11	24 hrs 24 hrs
			MOV	A B	4 11	24 hrs 24 hrs
			AOV	A B	4 11	24 hrs 24 hrs
			Check	A B	4 11	24 hrs 24 hrs
			SRV	A B	4 11	24 hrs 24 hrs
1. Group I,B (see Section 8.2.2.2)	1 valve - normally closed (valve is OC or IC)	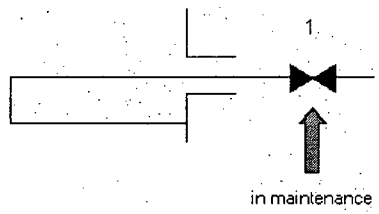	all	A B	2 9	8 hrs 8 hrs

Table D-1 (cont.) **Tech Spec Category Identification: Class I - Penetration Flow Paths Connected to Containment Atmosphere**

Calculation Number and Group	Penetration Description	Penetration Type	Valve Type Basis (see item 7 of Section 8.2)	Applicable Tech Spec 3.6.3 Condition (A or B)[1]	Completion Time (CT) Category Number	Justified CT
		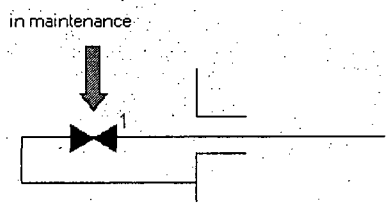	all	A	2	8 hrs
		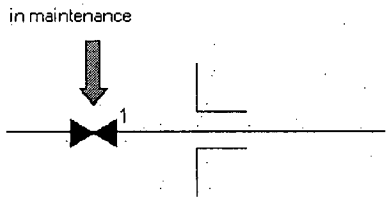	all	B	8	4 hrs

Table D-1 (cont.) Tech Spec Category Identification: Class I - Penetration Flow Paths Connected to Containment Atmosphere

Calculation Number and Group	Penetration Description	Penetration Type	Valve Type Basis (see item 7 of Section 8.2)	Applicable Tech Spec 3.6.3 Condition (A or B)[1]	Completion Time (CT) Category Number	Justified CT
2. Group I,B (see Section 8.2.2.2)	1 valve - normally open (valve can be OC or IC)	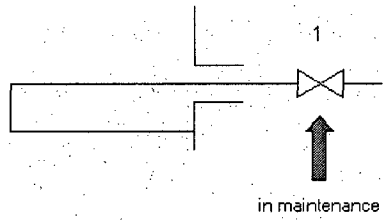	SOV	A	2	8 hrs
				B	9	8 hrs
			MOV	A	2	8 hrs
				B	9	8 hrs
			AOV	A	2	8 hrs
				B	9	8 hrs
			Check	A	2	8 hrs
				B	9	8 hrs
			SRV	A	2	8 hrs
				B	9	8 hrs
		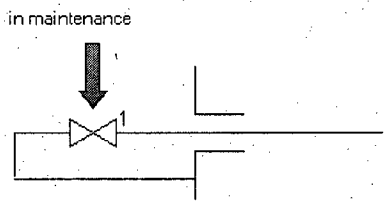	SOV	A	2	8 hrs
			MOV	A	2	8 hrs
			AOV	A	2	8 hrs
			Check	A	2	8 hrs
			SRV	A	2	8 hrs

Table D-1 (cont.) Tech Spec Category Identification: Class I - Penetration Flow Paths Connected to Containment Atmosphere

Calculation Number and Group	Penetration Description	Penetration Type	Valve Type Basis (see item 7 of Section 8.2)	Applicable Tech Spec 3.6.3 Condition (A or B)[1]	Completion Time (CT) Category Number	Justified CT
		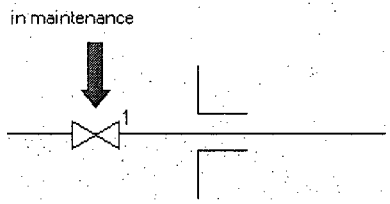	SOV	B	8	4 hrs
			MOV	B	8	4 hrs
			AOV	B	8	4 hrs
			Check	B	8	4 hrs
			SRV	B	8	4 hrs
3. Group I,B (see Section 8.2.2.2)	2 valves - normally closed – same valve type	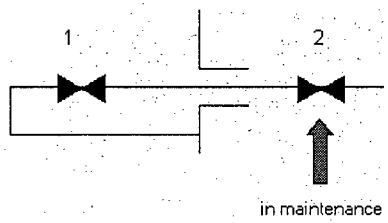	all	A B	6 13	72 hrs 72 hrs
		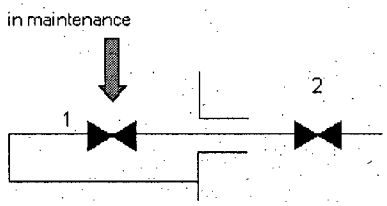	all	A	6	72 hrs

Table D-1 (cont.) **Tech Spec Category Identification: Class I - Penetration Flow Paths Connected to Containment Atmosphere**

Calculation Number and Group	Penetration Description	Penetration Type	Valve Type Basis (see item 7 of Section 8.2)	Applicable Tech Spec 3.6.3 Condition (A or B)[1]	Completion Time (CT) Category Number	Justified CT
		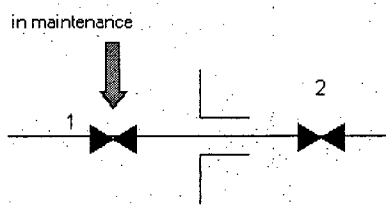	all	B	11	24 hrs
4. Group I,B (see Section 8.2.2.2)	2 valves - normally closed - different valve type	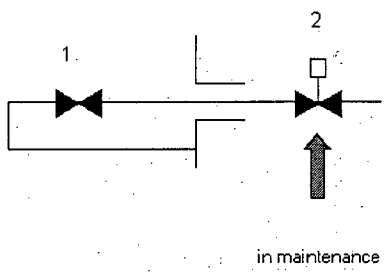	all	A B	7 14	168 hrs 168 hrs
		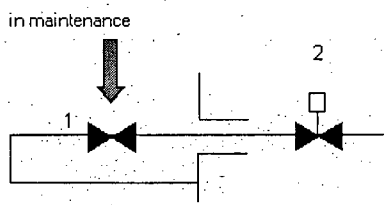	all	A	7	168 hrs

Table D-1 (cont.) Tech Spec Category Identification: Class I - Penetration Flow Paths Connected to Containment Atmosphere

Calculation Number and Group	Penetration Description	Penetration Type	Valve Type Basis (see item 7 of Section 8.2)	Applicable Tech Spec 3.6.3 Condition (A or B)[1]	Completion Time (CT) Category Number	Justified CT
		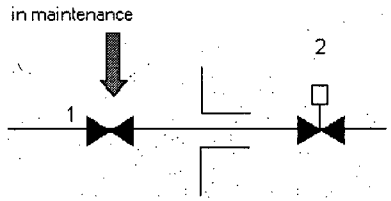	all	B	14	168 hrs
5. Group I,B (see Section 8.2.2.2)	2 valves - normally open - same valve type	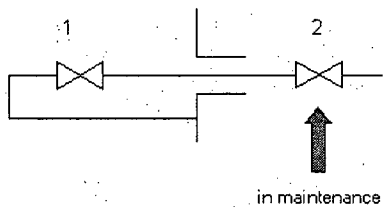	SOV MOV AOV Check SRV	A B A B A B A B A B	6 13 6 13 6 13 6 13 4 11	72 hrs 72 hrs 72 hrs 72 hrs 72 hrs 72 hrs 72 hrs 72 hrs 24 hrs 24 hrs

Table D-1 (cont.) Tech Spec Category Identification: Class I - Penetration Flow Paths Connected to Containment Atmosphere						
Calculation Number and Group	**Penetration Description**	**Penetration Type**	**Valve Type Basis** (see item 7 of Section 8.2)	**Applicable Tech Spec 3.6.3 Condition** (A or B)[1]	**Completion Time (CT) Category Number**	**Justified CT**
		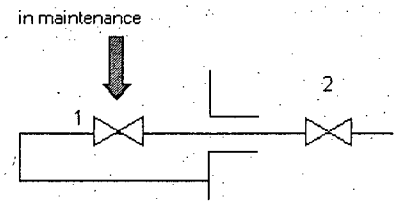	SOV	A	6	72 hrs
			MOV	A	6	72 hrs
			AOV	A	6	72 hrs
			Check	A	6	72 hrs
			SRV	A	4	24 hrs
		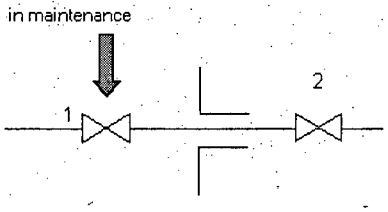	SOV	B	11	24 hrs
			MOV	B	11	24 hrs
			AOV	B	11	24 hrs
			Check	B	11	24 hrs
			SRV	B	10	12 hrs

Table D-1 (cont.) **Tech Spec Category Identification: Class I - Penetration Flow Paths Connected to Containment Atmosphere**

Calculation Number and Group	Penetration Description	Penetration Type	Valve Type Basis (see item 7 of Section 8.2)	Applicable Tech Spec 3.6.3 Condition (A or B)[1]	Completion Time (CT) Category Number	Justified CT
6. Group I,B (see Section 8.2.2.2)	2 valves - normally open – different valve type	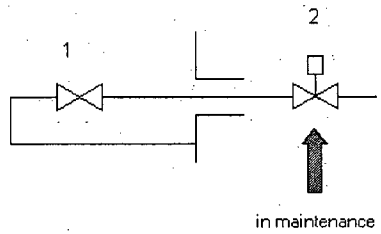	SOV	A B	7 14	168 hrs 168 hrs
			MOV	A B	7 14	168 hrs 168 hrs
			AOV	A B	7 14	168 hrs 168 hrs
			Check	A B	7 14	168 hrs 168 hrs
			SRV	A B	7 14	168 hrs 168 hrs
		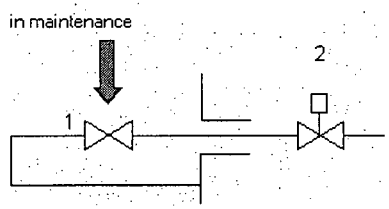	SOV	A	7	168 hrs
			MOV	A	7	168 hrs
			AOV	A	7	168 hrs
			Check	A	7	168 hrs
			SRV	A	7	168 hrs

Table D-1 (cont.) Tech Spec Category Identification: Class I - Penetration Flow Paths Connected to Containment Atmosphere

Calculation Number and Group	Penetration Description	Penetration Type	Valve Type Basis (see item 7 of Section 8.2)	Applicable Tech Spec 3.6.3 Condition (A or B)[1]	Completion Time (CT) Category Number	Justified CT
		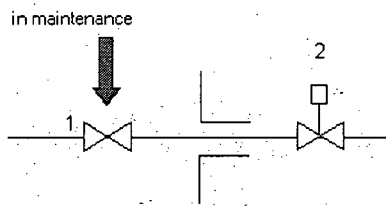	SOV	B	14	168 hrs
			MOV	B	14	168 hrs
			AOV	B	14	168 hrs
			Check	B	14	168 hrs
			SRV	B	14	168 hrs
7. Group I,B (see Section 8.2.2.2)	2 valves OC in parallel, 1 normally closed, 1 normally open, same valve types - 1 valve IC, normally open, different valve type from the valves OC	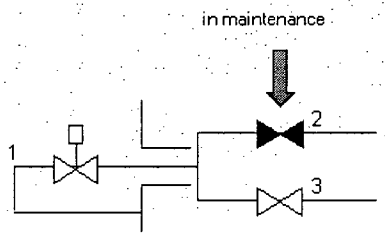	SOV	A B	7 14	168 hrs 168 hrs
			MOV	A B	7 14	168 hrs 168 hrs
			AOV	A B	7 14	168 hrs 168 hrs
			Check	A B	7 14	168 hrs 168 hrs
			SRV	A B	7 14	168 hrs 168 hrs

Table D-1 (cont.) Tech Spec Category Identification: Class I - Penetration Flow Paths Connected to Containment Atmosphere

Calculation Number and Group	Penetration Description	Penetration Type	Valve Type Basis (see item 7 of Section 8.2)	Applicable Tech Spec 3.6.3 Condition (A or B)[1]	Completion Time (CT) Category Number	Justified CT
		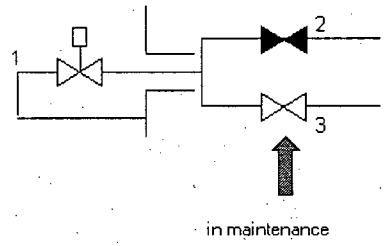	SOV	A B	7 14	168 hrs 168 hrs
			MOV	A B	7 14	168 hrs 168 hrs
			AOV	A B	7 14	168 hrs 168 hrs
			Check	A B	7 14	168 hrs 168 hrs
			SRV	A B	7 14	168 hrs 168 hrs
		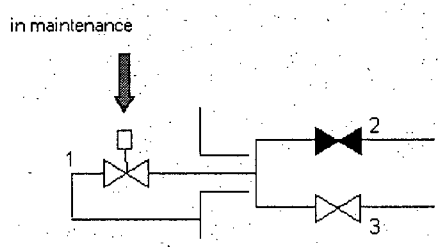	SOV	A	7	168 hrs
			MOV	A	7	168 hrs
			AOV	A	7	168 hrs
			Check	A	7	168 hrs
			SRV	A	7	168 hrs

Table D-1 (cont.) Tech Spec Category Identification: Class I - Penetration Flow Paths Connected to Containment Atmosphere

Calculation Number and Group	Penetration Description	Penetration Type	Valve Type Basis (see item 7 of Section 8.2)	Applicable Tech Spec 3.6.3 Condition (A or B)[1]	Completion Time (CT) Category Number	Justified CT
		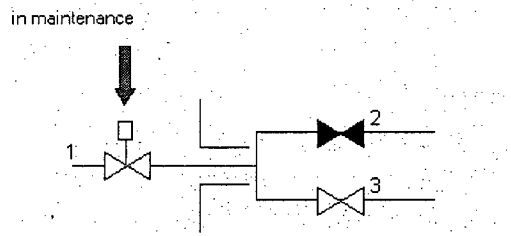	SOV	B	14	168 hrs
			MOV	B	14	168 hrs
			AOV	B	14	168 hrs
			Check	B	14	168 hrs
			SRV	B	14	168 hrs
8. Group I,B (see Section 8.2.2.2)	2 valves OC in parallel, 1 normally closed, 1 normally open - 2 valves IC in parallel, 1 normally closed, 1 normally open - all same valve types	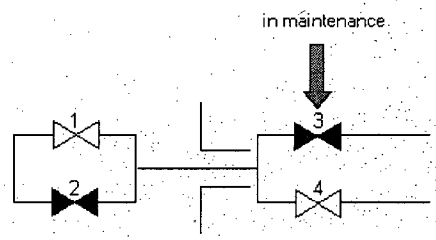	SOV	A B	6 13	72 hrs 72 hrs
			MOV	A B	6 13	72 hrs 72 hrs
			AOV	A B	6 13	72 hrs 72 hrs
			Check	A B	6 13	72 hrs 72 hrs
			SRV	A B	6 13	72 hrs 72 hrs

Table D-1 (cont.) **Tech Spec Category Identification: Class I - Penetration Flow Paths Connected to Containment Atmosphere**

Calculation Number and Group	Penetration Description	Penetration Type	Valve Type Basis (see item 7 of Section 8.2)	Applicable Tech Spec 3.6.3 Condition (A or B)[1]	Completion Time (CT) Category Number	Justified CT
		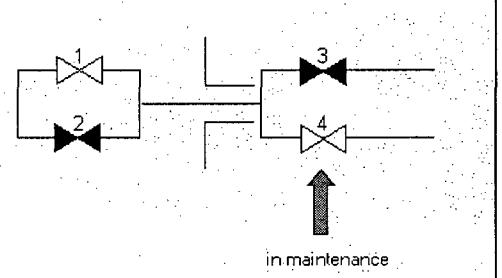	SOV	A B	6 13	72 hrs 72 hrs
			MOV	A B	6 13	72 hrs 72 hrs
			AOV	A B	6 13	72 hrs 72 hrs
			Check	A B	6 13	72 hrs 72 hrs
			SRV	A B	4 11	24 hrs 24 hrs
		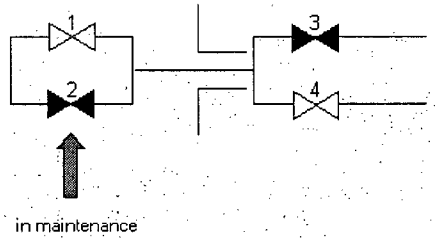	SOV	A	6	72 hrs
			MOV	A	6	72 hrs
			AOV	A	6	72 hrs
			Check	A	6	72 hrs
			SRV	A	6	72 hrs

Table D-1 (cont.) Tech Spec Category Identification: Class I - Penetration Flow Paths Connected to Containment Atmosphere

Calculation Number and Group	Penetration Description	Penetration Type	Valve Type Basis (see item 7 of Section 8.2)	Applicable Tech Spec 3.6.3 Condition (A or B)[1]	Completion Time (CT) Category Number	Justified CT
		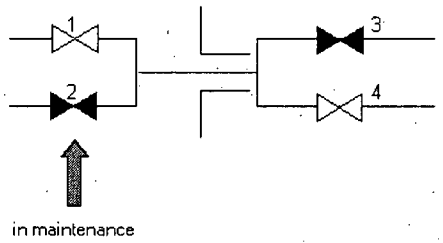	SOV	B	11	24 hrs
			MOV	B	11	24 hrs
			AOV	B	11	24 hrs
			Check	B	11	24 hrs
			SRV	B	11	24 hrs
		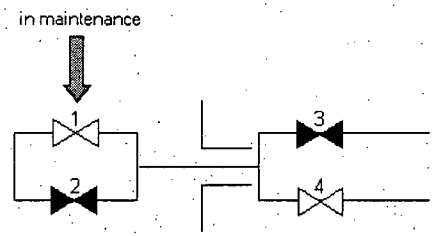	SOV	A	6	72 hrs
			MOV	A	6	72 hrs
			AOV	A	6	72 hrs
			Check	A	6	72 hrs
			SRV	A	4	24 hrs
		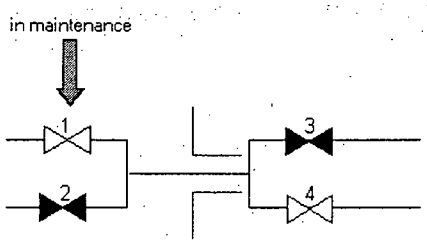	SOV	B	11	24 hrs
			MOV	B	11	24 hrs
			AOV	B	11	24 hrs
			Check	B	11	24 hrs
			SRV	B	10	12 hrs

Table D-1 (cont.) Tech Spec Category Identification: Class I - Penetration Flow Paths Connected to Containment Atmosphere

Calculation Number and Group	Penetration Description	Penetration Type	Valve Type Basis (see item 7 of Section 8.2)	Applicable Tech Spec 3.6.3 Condition (A or B)[1]	Completion Time (CT) Category Number	Justified CT
1. Group I,C (see Section 8.2.2.3)	1 valve – normally closed (valve is OC or IC)	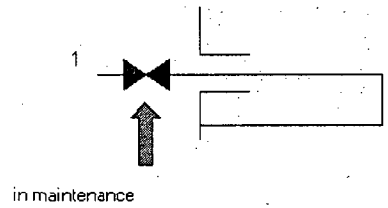	all	A B	2 9	8 hrs 8 hrs
		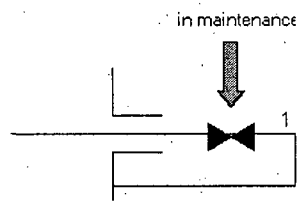	all	A	2	8 hrs
		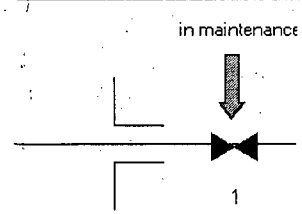	all	B	8	4 hrs

Table D-1 (cont.) Tech Spec Category Identification: Class I - Penetration Flow Paths Connected to Containment Atmosphere

Calculation Number and Group	Penetration Description	Penetration Type	Valve Type Basis (see item 7 of Section 8.2)	Applicable Tech Spec 3.6.3 Condition (A or B)[1]	Completion Time (CT) Category Number	Justified CT
2. Group I,C (see Section 8.2.2.3)	1 valve - normally open (valve is OC or IC)	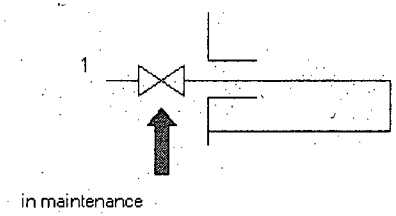	SOV	A	2	8 hrs
				B	9	8 hrs
			MOV	A	2	8 hrs
				B	9	8 hrs
			AOV	A	2	8 hrs
				B	9	8 hrs
			Check	A	2	8 hrs
				B	9	8 hrs
			SRV	A	2	8 hrs
				B	9	8 hrs
		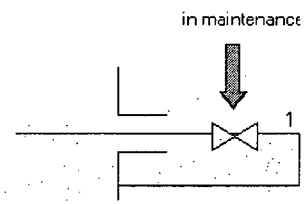	SOV	A	2	8 hrs
			MOV	A	2	8 hrs
			AOV	A	2	8 hrs
			Check	A	2	8 hrs
			SRV	A	2	8 hrs

Table D-1 (cont.) Tech Spec Category Identification: Class I - Penetration Flow Paths Connected to Containment Atmosphere

Calculation Number and Group	Penetration Description	Penetration Type	Valve Type Basis (see item 7 of Section 8.2)	Applicable Tech Spec 3.6.3 Condition (A or B)[1]	Completion Time (CT) Category Number	Justified CT
		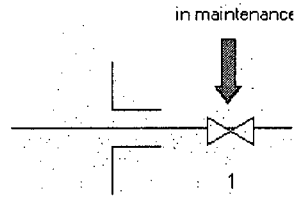	SOV	B	8	4 hrs
			MOV	B	8	4 hrs
			AOV	B	8	4 hrs
			Check	B	8	4 hrs
			SRV	B	8	4 hrs
3. Group I,C (see Section 8.2.2.3)	2 valves - normally closed - same valve type	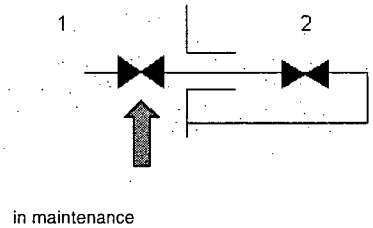	all	A B	6 13	72 hrs 72 hrs
		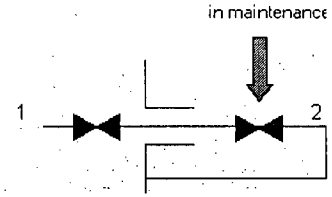	all	A	6	72 hrs

Table D-1 (cont.) Tech Spec Category Identification: Class I - Penetration Flow Paths Connected to Containment Atmosphere

Calculation Number and Group	Penetration Description	Penetration Type	Valve Type Basis (see item 7 of Section 8.2)	Applicable Tech Spec 3.6.3 Condition (A or B)[1]	Completion Time (CT) Category Number	Justified CT
		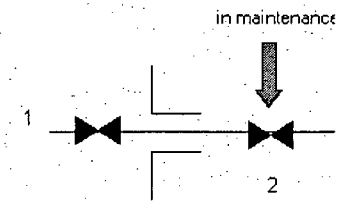	all	B	11	24 hrs
4. Group I,C (see Section 8.2.2.3)	2 valves - normally closed - different valve type	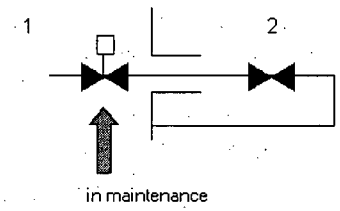	all	A B	7 14	168 hrs 168 hrs
		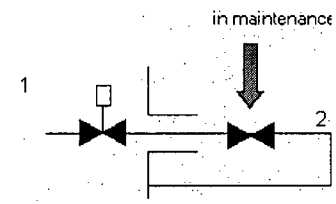	all	A	7	168 hrs

Table D-1 (cont.) Tech Spec Category Identification: Class I - Penetration Flow Paths Connected to Containment Atmosphere

Calculation Number and Group	Penetration Description	Penetration Type	Valve Type Basis (see item 7 of Section 8.2)	Applicable Tech Spec 3.6.3 Condition (A or B)[1]	Completion Time (CT) Category Number	Justified CT
		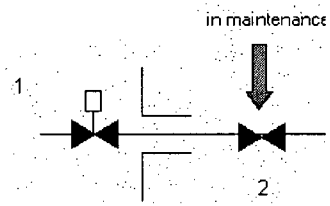	all	B	14	168 hrs
5. Group I,C (see Section 8.2.2.3)	2 valves - normally open - same valve type	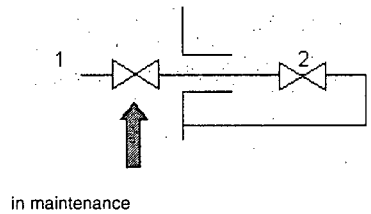	SOV	A B	6 13	72 hrs 72 hrs
			MOV	A B	6 13	72 hrs 72 hrs
			AOV	A B	6 13	72 hrs 72 hrs
			Check	A B	6 13	72 hrs 72 hrs
			SRV	A B	4 11	24 hrs 24 hrs

Table D-1 (cont.) Tech Spec Category Identification: Class I - Penetration Flow Paths Connected to Containment Atmosphere

Calculation Number and Group	Penetration Description	Penetration Type	Valve Type Basis (see item 7 of Section 8.2)	Applicable Tech Spec 3.6.3 Condition (A or B)[1]	Completion Time (CT) Category Number	Justified CT
		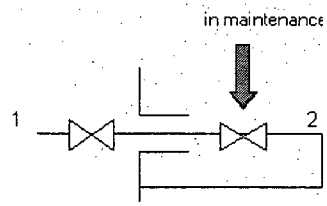	SOV	A	6	72 hrs
			MOV	A	6	72 hrs
			AOV	A	6	72 hrs
			Check	A	6	72 hrs
			SRV	A	4	24 hrs
		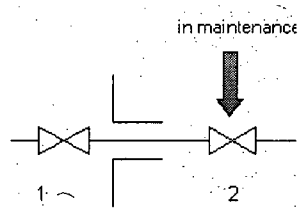	SOV	B	11	24 hrs
			MOV	B	11	24 hrs
			AOV	B	11	24 hrs
			Check	B	11	24 hrs
			SRV	B	10	12 hrs

Table D-1 (cont.) Tech Spec Category Identification: Class I - Penetration Flow Paths Connected to Containment Atmosphere

Calculation Number and Group	Penetration Description	Penetration Type	Valve Type Basis (see item 7 of Section 8.2)	Applicable Tech Spec 3.6.3 Condition (A or B)[1]	Completion Time (CT) Category Number	Justified CT
6. Group I,C (see Section 8.2.2.3)	2 valves - normally open - different valve type	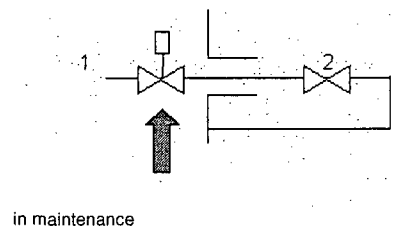	SOV	A	7	168 hrs
				B	14	168 hrs
			MOV	A	7	168 hrs
				B	14	168 hrs
			AOV	A	7	168 hrs
				B	14	168 hrs
			Check	A	7	168 hrs
				B	14	168 hrs
			SRV	A	7	168 hrs
				B	14	168 hrs
		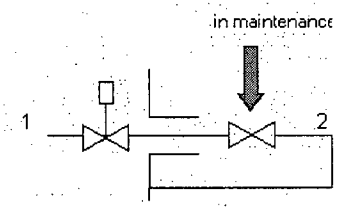	SOV	A	7	168 hrs
			MOV	A	7	168 hrs
			AOV	A	7	168 hrs
			Check	A	7	168 hrs
			SRV	A	7	168 hrs

Table D-1 (cont.) Tech Spec Category Identification: Class I - Penetration Flow Paths Connected to Containment Atmosphere

Calculation Number and Group	Penetration Description	Penetration Type	Valve Type Basis (see item 7 of Section 8.2)	Applicable Tech Spec 3.6.3 Condition (A or B)[1]	Completion Time (CT) Category Number	Justified CT
		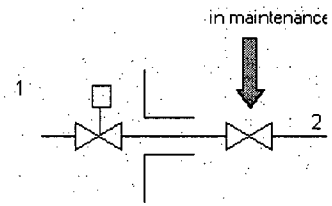	SOV	B	14	168 hrs
			MOV	B	14	168 hrs
			AOV	B	14	168 hrs
			Check	B	14	168 hrs
			SRV	B	14	168 hrs
1. Group I,D (see Section 8.2.2.4)	2 valves - normally closed - different valve type	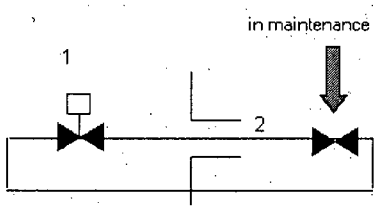	all	A	7	168 hrs
		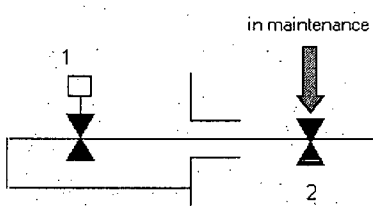	all	B	14	168 hrs

Table D-1 (cont.) Tech Spec Category Identification: Class I - Penetration Flow Paths Connected to Containment Atmosphere

Calculation Number and Group	Penetration Description	Penetration Type	Valve Type Basis (see item 7 of Section 8.2)	Applicable Tech Spec 3.6.3 Condition (A or B)[1]	Completion Time (CT) Category Number	Justified CT
		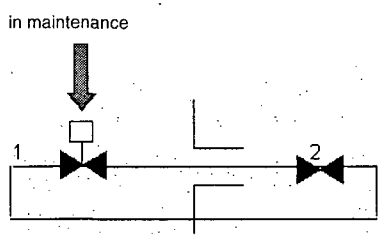	all	A	7	168 hrs
		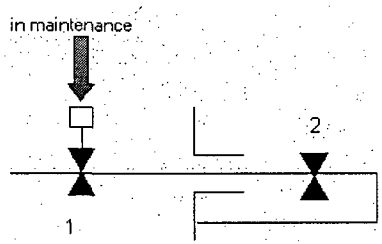	all	B	14	168 hrs

Notes:

1. A – CIV pressure barrier intact
   B – CIV pressure barrier not intact

Table D-2 Tech Spec Category Identification: Class II - Penetration Flow Paths Connected to the RCS

Calculation Number and Group	Penetration Description	Penetration Type	Valve Type Basis (see item 7 of Section 8.2)	Applicable Tech Spec 3.6.3 Condition (A or B)[1]	Completion Time (CT) Category Number	Justified CT
1. Group II,A (see Section 8.2.3.1)	ECCS Test Line Return - High Pressure Coolant Injection System: • 2 valves OC in parallel, normally closed, different valve types – 1 valve IC, normally closed - orifice between RCS and IC CIV 3/8" or less diameter (The valve IC has additional normally closed valves between it and the RCS, Note: path 2 is eliminated)	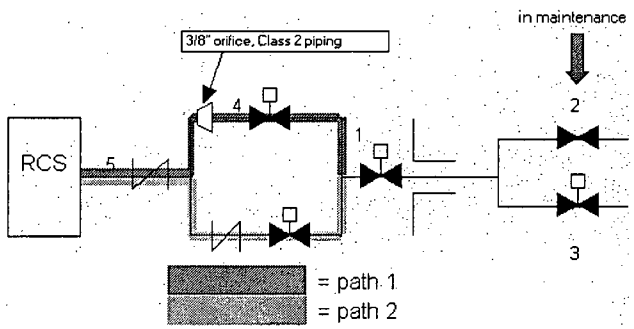	all	A B	7 14	168 hrs 168 hrs
		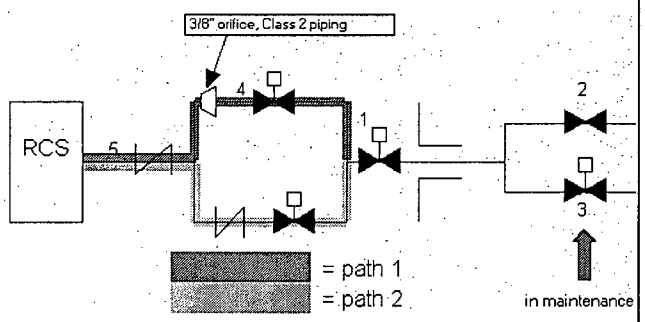	all	A B	7 14	168 hrs 168 hrs

Table D-2 (cont.) Tech Spec Category Identification: Class II - Penetration Flow Paths Connected to the RCS

Calculation Number and Group	Penetration Description	Penetration Type	Valve Type Basis (see item 7 of Section 8.2)	Applicable Tech Spec 3.6.3 Condition (A or B)[1]	Completion Time (CT) Category Number	Justified CT
		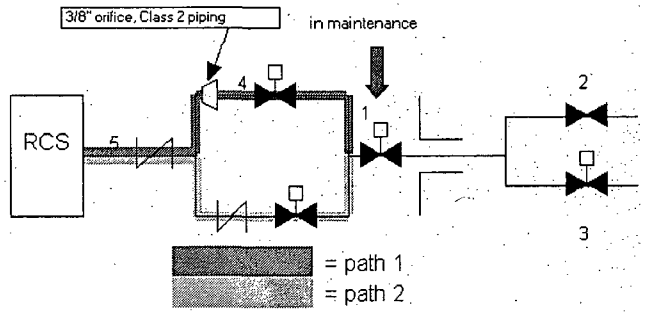	all	A	7	168 hrs
		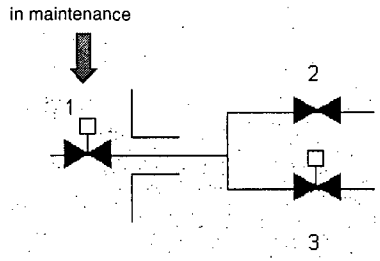	all	B	11	24 hrs

Table D-2 (cont.) Tech Spec Category Identification: Class II - Penetration Flow Paths Connected to the RCS

Calculation Number and Group	Penetration Description	Penetration Type	Valve Type Basis (see item 7 of Section 8.2)	Applicable Tech Spec 3.6.3 Condition (A or B)[1]	Completion Time (CT) Category Number	Justified CT
2. Group II,A (see Section 8.2.3.1)	Pressurizer Vapor Sample Line: • 2 valves OC in parallel, normally closed, different valve types – 1 valve IC, normally closed - 3/8" or less piping diameter	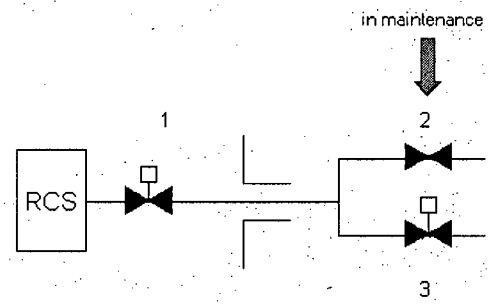	all	A B	7 14	168 hrs 168 hrs
		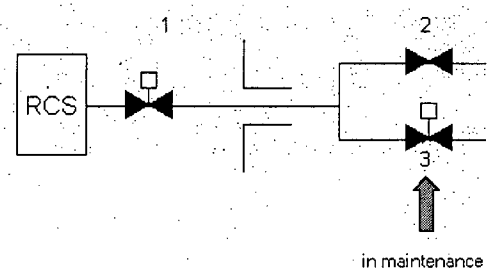	all	A B	4 11	24 hrs 24 hrs

Table D-2 (cont.) Tech Spec Category Identification: Class II - Penetration Flow Paths Connected to the RCS

Calculation Number and Group	Penetration Description	Penetration Type	Valve Type Basis (see item 7 of Section 8.2)	Applicable Tech Spec 3.6.3 Condition (A or B)[1]	Completion Time (CT) Category Number	Justified CT
		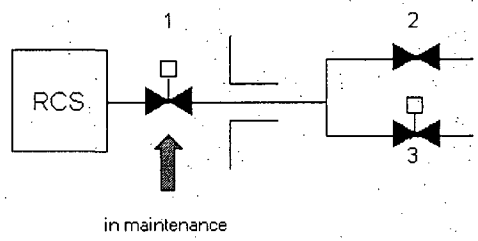	all	A	4	24 hrs
		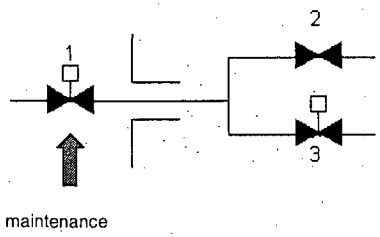	all	B	11	24 hrs

Table D-2 (cont.) Tech Spec Category Identification: Class II - Penetration Flow Paths Connected to the RCS

Calculation Number and Group	Penetration Description	Penetration Type	Valve Type Basis (see item 7 of Section 8.2)	Applicable Tech Spec 3.6.3 Condition (A or B)[1]	Completion Time (CT) Category Number	Justified CT
3. Group II,A (see Section 8.2.3.1)	Pressurizer Liquid Sample Line: • 3 valves OC in parallel, 2 normally closed, 1 normally open - 1 valve IC normally open - 3/8" or less piping diameter	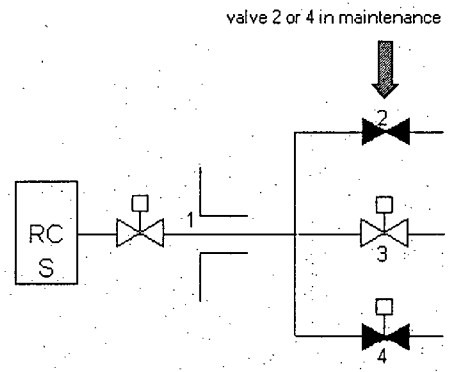	SOV MOV AOV Check	A B A B A B A B	7 14 7 14 7 14 7 14	168 hrs 168 hrs 168 hrs 168 hrs 168 hrs 168 hrs 168 hrs 168 hrs
		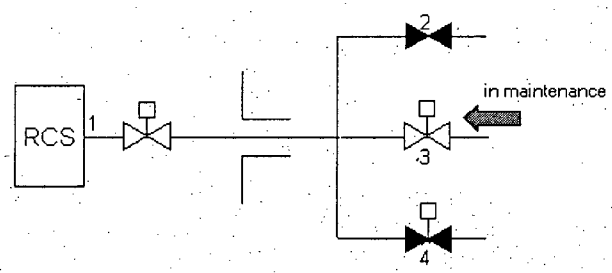	SOV MOV AOV Check	A B A B A B A B	4 11 4 11 4 11 4 11	24 hrs 24 hrs 24 hrs 24 hrs 24 hrs 24 hrs 24 hrs 24 hrs

Table D-2 (cont.) Tech Spec Category Identification: Class II - Penetration Flow Paths Connected to the RCS

Calculation Number and Group	Penetration Description	Penetration Type	Valve Type Basis (see item 7 of Section 8.2)	Applicable Tech Spec 3.6.3 Condition (A or B)[1]	Completion Time (CT) Category Number	Justified CT
		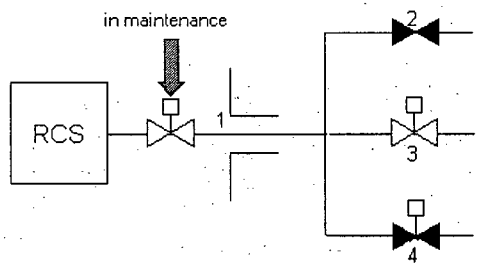	SOV MOV AOV Check	A A A A	4 4 4 4	24 hrs 24 hrs 24 hrs 24 hrs
		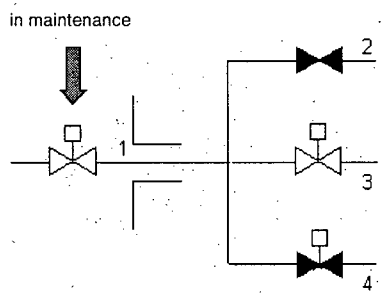	SOV MOV AOV Check	B B B B	11 11 11 11	24 hrs 24 hrs 24 hrs 24 hrs

Table D-2 (cont.) Tech Spec Category Identification: Class II - Penetration Flow Paths Connected to the RCS

Calculation Number and Group	Penetration Description	Penetration Type	Valve Type Basis (see item 7 of Section 8.2)	Applicable Tech Spec 3.6.3 Condition (A or B)[1]	Completion Time (CT) Category Number	Justified CT
4. Group II,A (see Section 8.2.3.1)	Post Accident Sample Line: 3 valves OC in parallel, normally closed, different valve types - 1 valve IC, normally closed 3/8" or less piping diameter	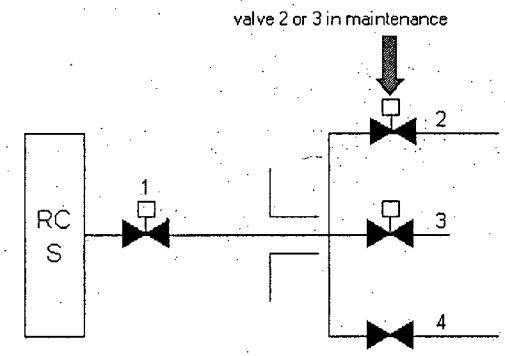	all	A B	7 14	168 hrs 168 hrs
		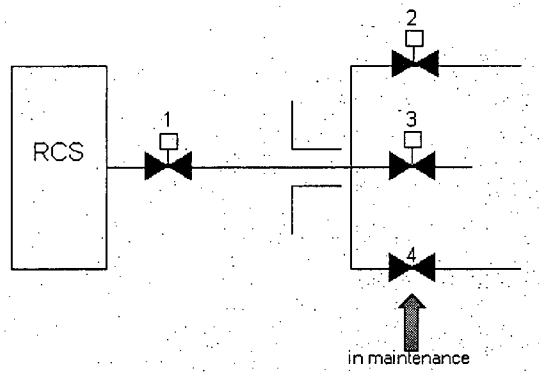	all	A B	7 14	168 hrs 168 hrs

Table D-2 (cont.) Tech Spec Category Identification: Class II - Penetration Flow Paths Connected to the RCS

Calculation Number and Group	Penetration Description	Penetration Type	Valve Type Basis (see item 7 of Section 8.2)	Applicable Tech Spec 3.6.3 Condition (A or B)[1]	Completion Time (CT) Category Number	Justified CT
		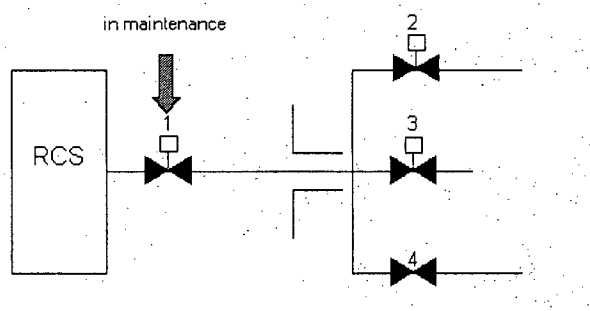	all	A	3	12 hrs
		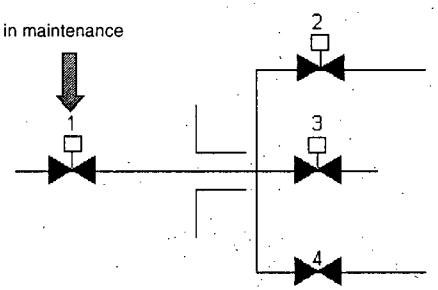	all	B	10	12 hrs

Table D-2 (cont.) Tech Spec Category Identification: Class II - Penetration Flow Paths Connected to the RCS

Calculation Number and Group	Penetration Description	Penetration Type	Valve Type Basis (see item 7 of Section 8.2)	Applicable Tech Spec 3.6.3 Condition (A or B)[1]	Completion Time (CT) Category Number	Justified CT
5. Group II,A (see Section 8.2.3.1)	Residual Heat Removal System (Low Head) - Hot Leg Injection, Recirc to Hot Leg: OR	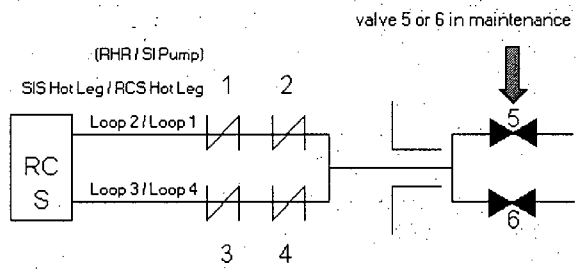	all	A B	6 13	72 hrs 72 hrs
	Safety Injection Pump (Intermediate Head) - Hot Leg Injection, Recirc to Hot Leg: • 2 valves IC in parallel, normally closed - 2 valve OC in parallel, normally closed - different valve types	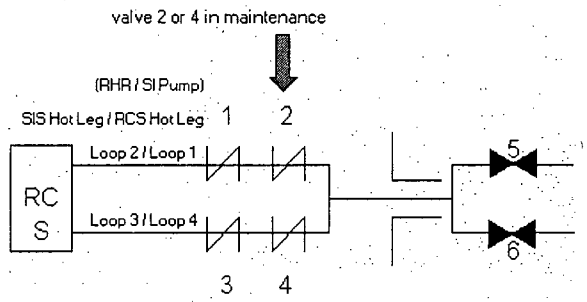	all	A	6	72 hrs

Table D-2 (cont.) Tech Spec Category Identification: Class II - Penetration Flow Paths Connected to the RCS

Calculation Number and Group	Penetration Description	Penetration Type	Valve Type Basis (see item 7 of Section 8.2)	Applicable Tech Spec 3.6.3 Condition (A or B)[1]	Completion Time (CT) Category Number	Justified CT
	(The 2 check valves IC each have another normally closed check valve in series with them)	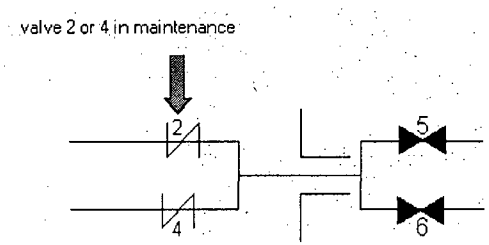	all	B	14	168 hrs
6. Group II,A (see Section 8.2.3.1)	Residual Heat Removal System (Low Head) - Cold Leg Injection, Recirc to Cold Leg:	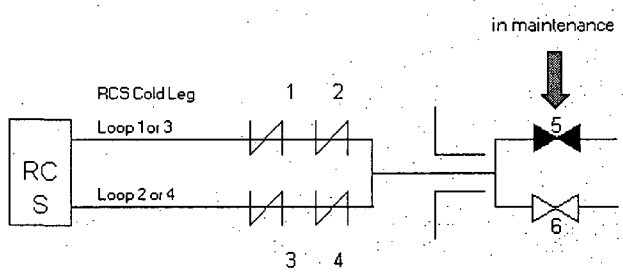	SOV MOV AOV Check	A B A B A B A B	1 8 1 8 1 8 1 8	4 hrs 4 hrs 4 hrs 4 hrs 4 hrs 4 hrs 4 hrs 4 hrs

Table D-2 (cont.) Tech Spec Category Identification: Class II - Penetration Flow Paths Connected to the RCS

Calculation Number and Group	Penetration Description	Penetration Type	Valve Type Basis (see item 7 of Section 8.2)	Applicable Tech Spec 3.6.3 Condition (A or B)[1]	Completion Time (CT) Category Number	Justified CT
	• 2 valves IC in parallel, normally closed – 2 valves OC in parallel, 1 normally closed, 1 normally open - different valve types (The 2 check valves IC each have another normally closed check valve in series with them)	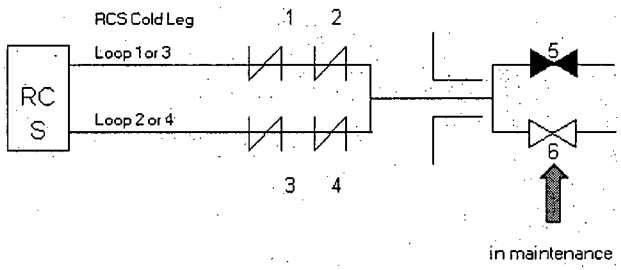	SOV MOV AOV Check	A B A B A B A B	1 8 1 8 1 8 1 8	4 hrs 4 hrs 4 hrs 4 hrs 4 hrs 4 hrs 4 hrs 4 hrs
		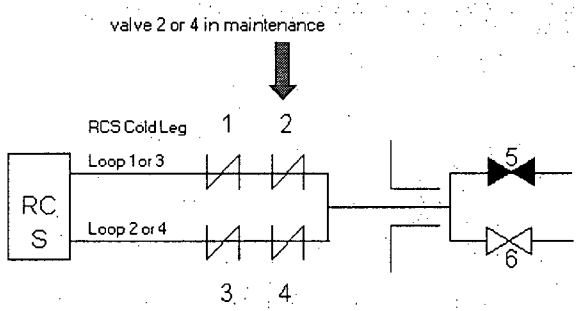	SOV MOV AOV Check	A A A A	1 1 1 1	4 hrs 4 hrs 4 hrs 4 hrs

Table D-2 (cont.) Tech Spec Category Identification: Class II - Penetration Flow Paths Connected to the RCS

Calculation Number and Group	Penetration Description	Penetration Type	Valve Type Basis (see item 7 of Section 8.2)	Applicable Tech Spec 3.6.3 Condition (A or B)[1]	Completion Time (CT) Category Number	Justified CT
		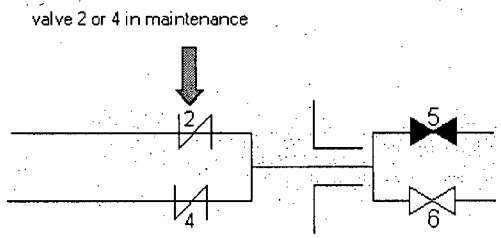	SOV MOV AOV Check	B B B B	8 8 8 8	4 hrs 4 hrs 4 hrs 4 hrs
7. Group II,A (see Section 8.2.3.1)	Safety Injection Pump (intermediate head) - Cold Leg Injection, Recirc to Cold Leg: • 4 valves IC in parallel, normally closed - 2 valve OC in parallel, 1 normally closed, 1 normally open - different valve type	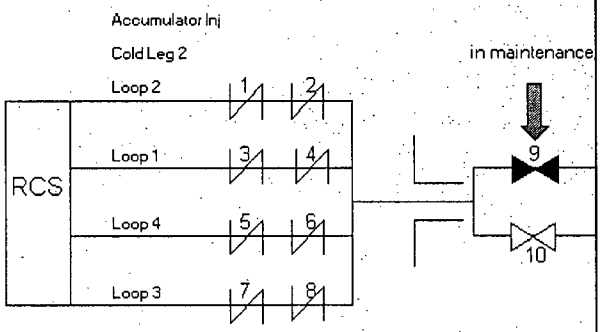	SOV MOV AOV Check	A B A B A B A B	1 8 1 8 1 8 1 8	4 hrs 4 hrs 4 hrs 4 hrs 4 hrs 4 hrs 4 hrs 4 hrs

Table D-2 (cont.) Tech Spec Category Identification: Class II - Penetration Flow Paths Connected to the RCS

Calculation Number and Group	Penetration Description	Penetration Type	Valve Type Basis (see item 7 of Section 8.2)	Applicable Tech Spec 3.6.3 Condition (A or B)[1]	Completion Time (CT) Category Number	Justified CT
	(The 4 check valves IC each have another normally closed check valve in series with it)	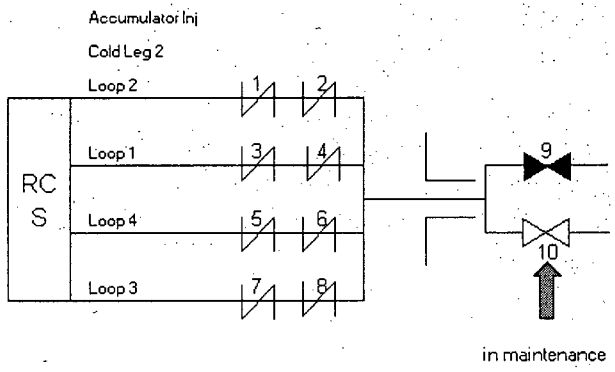	SOV MOV AOV Check	A B A B A B A B	1 8 1 8 1 8 1 8	4 hrs 4 hrs 4 hrs 4 hrs 4 hrs 4 hrs 4 hrs 4 hrs
		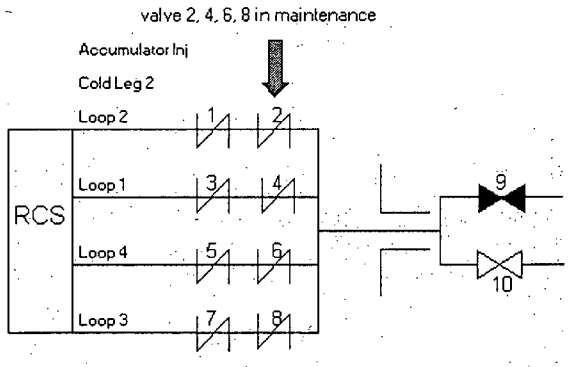	SOV MOV AOV Check	A A A A	1 1 1 1	4 hrs 4 hrs 4 hrs 4 hrs

Table D-2 (cont.) Tech Spec Category Identification: Class II - Penetration Flow Paths Connected to the RCS

Calculation Number and Group	Penetration Description	Penetration Type	Valve Type Basis (see item 7 of Section 8.2)	Applicable Tech Spec 3.6.3 Condition (A or B)[1]	Completion Time (CT) Category Number	Justified CT
		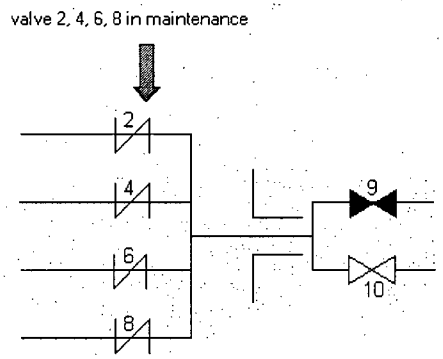	SOV MOV AOV Check	B B B B	8 8 8 8	4 hrs 4 hrs 4 hrs 4 hrs
8. Group II,A (see Section 8.2.3.1)	Residual Heat Removal System (Low Head) - Hot Leg to RHR Pumps, RHR Shutdown Lines: • 1 valve IC, normally closed (The valve IC has another normally closed valve in series with it)	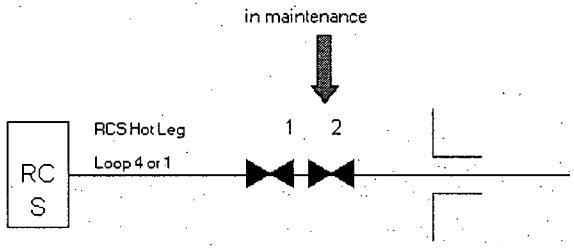	all	A	1	4 hrs
		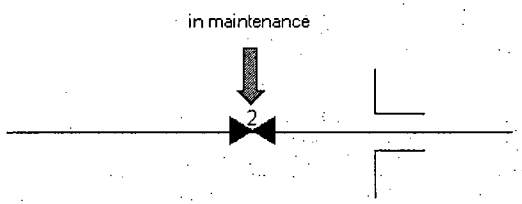	all	B	8	4 hrs

Table D-2 (cont.) Tech Spec Category Identification: Class II - Penetration Flow Paths Connected to the RCS

Calculation Number and Group	Penetration Description	Penetration Type	Valve Type Basis (see item 7 of Section 8.2)	Applicable Tech Spec 3.6.3 Condition (A or B)[1]	Completion Time (CT) Category Number	Justified CT
9. Group II,A (see Section 8.2.3.1)	RVLIS Sample Line - Reactor Coolant System: • Hydraulic Sensors IC, LIS's OC	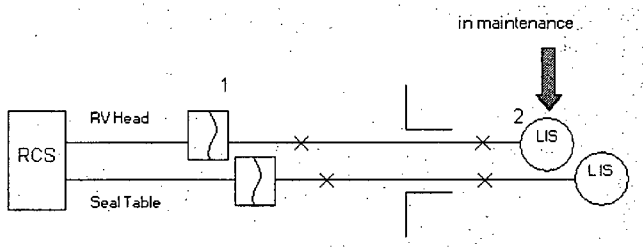	LISs	A	7	168 hrs
		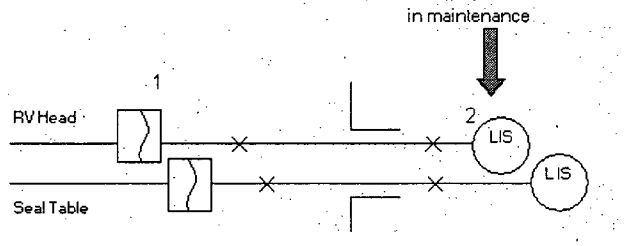	LISs	B	14	168 hrs

Table D-2 (cont.) Tech Spec Category Identification: Class II - Penetration Flow Paths Connected to the RCS

Calculation Number and Group	Penetration Description	Penetration Type	Valve Type Basis (see item 7 of Section 8.2)	Applicable Tech Spec 3.6.3 Condition (A or B)[1]	Completion Time (CT) Category Number	Justified CT
		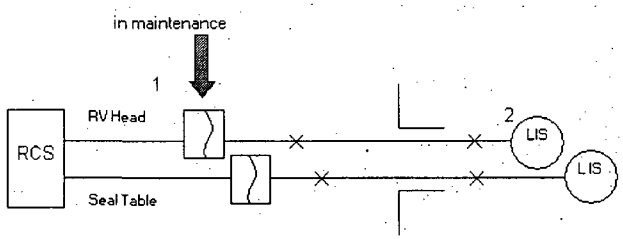	sensors	A	7	168 hrs
		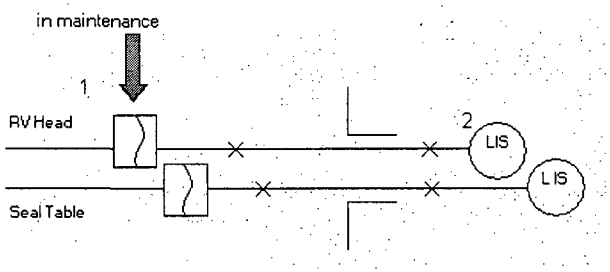	sensors	B	14	168 hrs

Table D-2 (cont.) Tech Spec Category Identification: Class II - Penetration Flow Paths Connected to the RCS

Calculation Number and Group	Penetration Description	Penetration Type	Valve Type Basis (see item 7 of Section 8.2)	Applicable Tech Spec 3.6.3 Condition (A or B)[1]	Completion Time (CT) Category Number	Justified CT
10. Group II,A (see Section 8.2.3.1)	Centrifugal Charging Pumps (High Head) - Recirc to Hot Legs: • 3 valves of same type IC in parallel, normally closed – 1 valve OC, normally closed - valves IC different type from those OC (The check valves IC have 3 parallel normally closed check valves in series with them)	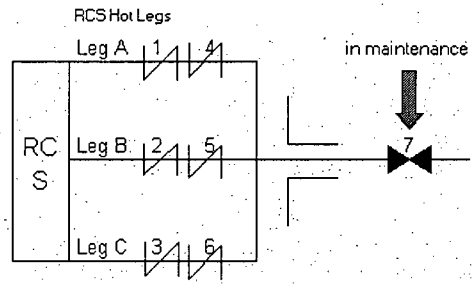	all	A B	6 13	72 hrs 72 hrs
		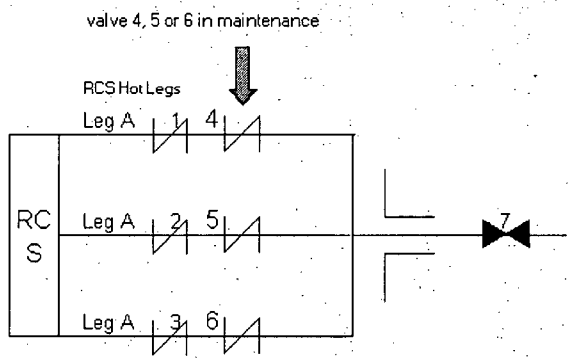	all	A	7	168 hrs

Table D-2 (cont.) Tech Spec Category Identification: Class II - Penetration Flow Paths Connected to the RCS

Calculation Number and Group	Penetration Description	Penetration Type	Valve Type Basis (see item 7 of Section 8.2)	Applicable Tech Spec 3.6.3 Condition (A or B)[1]	Completion Time (CT) Category Number	Justified CT
		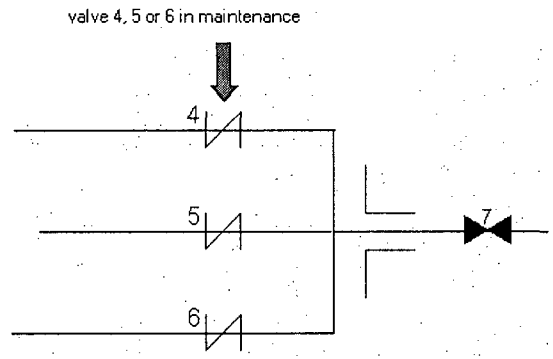	all	B	14	168 hrs
11. Group II,A (see Section 8.2.3.1)	Centrifugal Charging Pumps (High Head) - Recirc to Hot Legs:	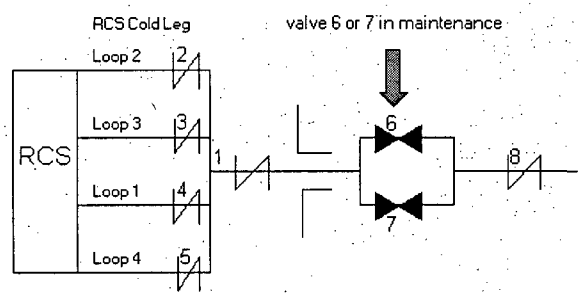	all	A	7	168 hrs

Table D-2 (cont.) Tech Spec Category Identification: Class II - Penetration Flow Paths Connected to the RCS

Calculation Number and Group	Penetration Description	Penetration Type	Valve Type Basis (see item 7 of Section 8.2)	Applicable Tech Spec 3.6.3 Condition (A or B)[1]	Completion Time (CT) Category Number	Justified CT
	• 3 valves of same type IC in parallel, normally closed - 1 valve OC, normally closed - valves IC different type from those OC	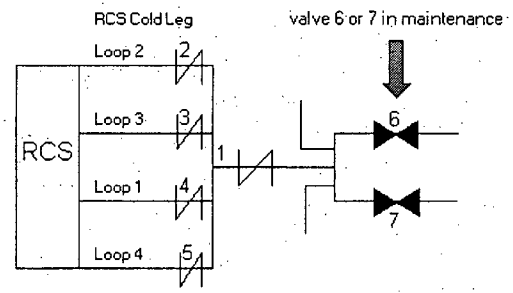	all	B	14	168 hrs
	(The check valves IC have 3 parallel normally closed check valves in series with them)	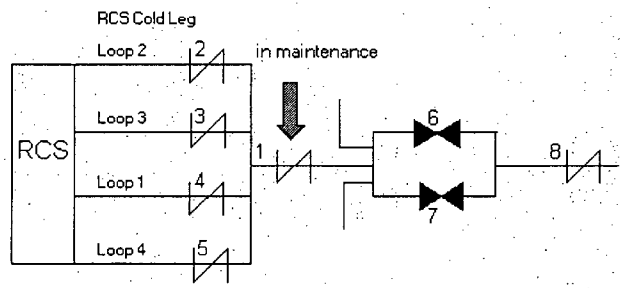	all	A	7	168 hrs

Table D-2 (cont.) **Tech Spec Category Identification: Class II - Penetration Flow Paths Connected to the RCS**

Calculation Number and Group	Penetration Description	Penetration Type	Valve Type Basis (see item 7 of Section 8.2)	Applicable Tech Spec 3.6.3 Condition (A or B)[1]	Completion Time (CT) Category Number	Justified CT
		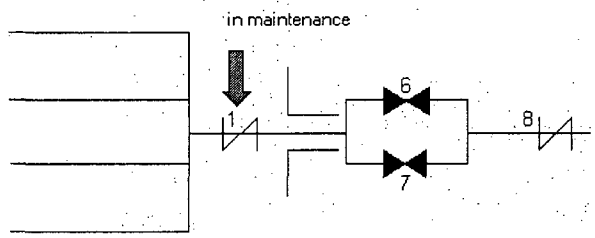	all	B	14	168 hrs
12. Group II,A (see Section 8.2.3.1)	Centrifugal Charging Pumps (High Head) - Injection to Cold Legs, Recirc to Cold Legs:	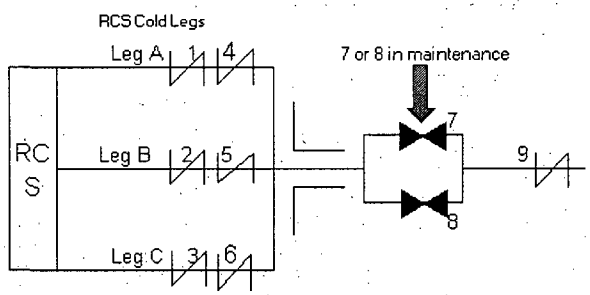	all	A	7	168 hrs

Table D-2 (cont.) Tech Spec Category Identification: Class II - Penetration Flow Paths Connected to the RCS

Calculation Number and Group	Penetration Description	Penetration Type	Valve Type Basis (see item 7 of Section 8.2)	Applicable Tech Spec 3.6.3 Condition (A or B)[1]	Completion Time (CT) Category Number	Justified CT
	• 3 valves of same type IC in parallel, normally closed - 2 valves of same valve type OC in parallel, normally closed - valves IC different type from those OC (The check valves IC have 3 parallel normally closed check valves in series with them)	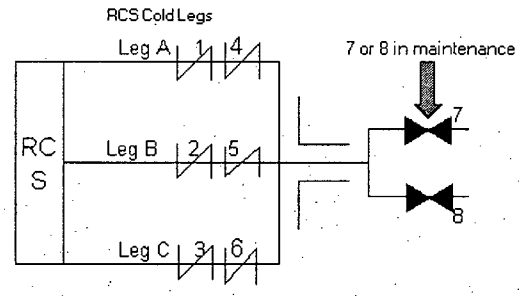	all	B	14	168 hrs
		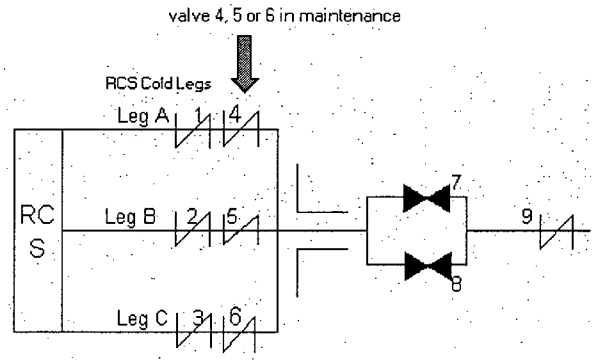	all	A	7	168 hrs

Table D-2 (cont.) Tech Spec Category Identification: Class II - Penetration Flow Paths Connected to the RCS

Calculation Number and Group	Penetration Description	Penetration Type	Valve Type Basis (see item 7 of Section 8.2)	Applicable Tech Spec 3.6.3 Condition (A or B)[1]	Completion Time (CT) Category Number	Justified CT
	(The valves OC have another normally closed check valves in series with them)	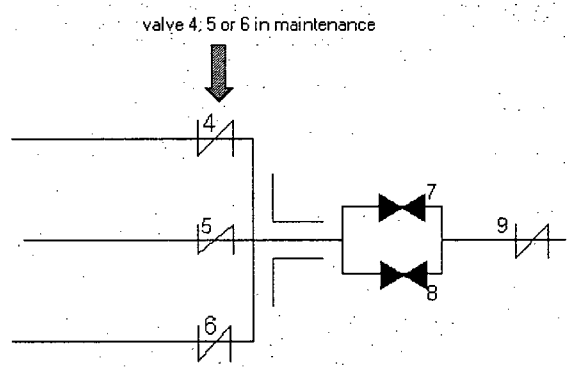	all	B	14	168 hrs
1. Group II,B (see Section 8.2.3.2)	Chemical & Volume Control System -Normal Letdown Legs: • 1 valve IC, normally open - 2 valves OC, 1 normally open, 1 normally closed - same valve type	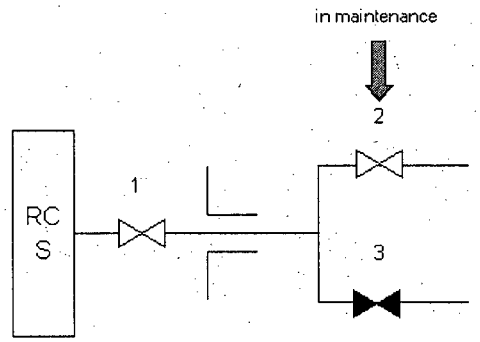	SOV MOV AOV Check	A B A B A B A B	4 11 4 11 4 11 4 11	24 hrs 24 hrs 24 hrs 24 hrs 24 hrs 24 hrs 24 hrs 24 hrs

Table D-2 (cont.) Tech Spec Category Identification: Class II - Penetration Flow Paths Connected to the RCS

Calculation Number and Group	Penetration Description	Penetration Type	Valve Type Basis (see item 7 of Section 8.2)	Applicable Tech Spec 3.6.3 Condition (A or B)[1]	Completion Time (CT) Category Number	Justified CT
		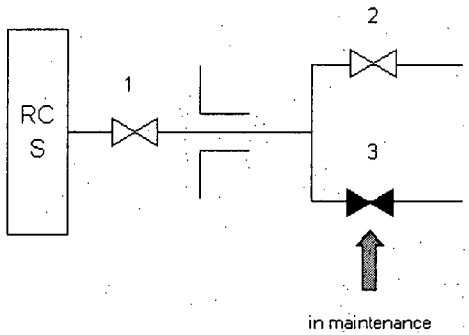	SOV MOV AOV Check	A B A B A B A B	6 13 7 14 6 13 7 14	72 hrs 72 hrs 168 hrs 168 hrs 72 hrs 72 hrs 168 hrs 168 hrs
		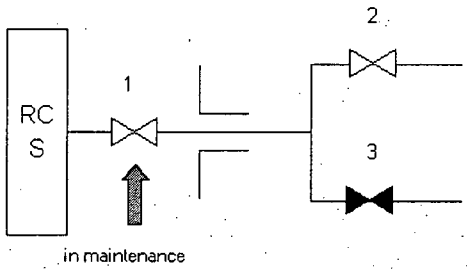	SOV MOV AOV Check	A A A A	4 4 4 4	24 hrs 24 hrs 24 hrs 24 hrs
		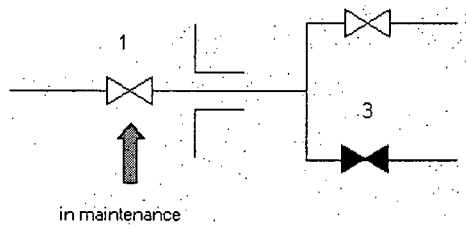	SOV MOV AOV Check	B B B B	11 11 11 11	24 hrs 24 hrs 24 hrs 24 hrs

Table D-2 (cont.) Tech Spec Category Identification: Class II - Penetration Flow Paths Connected to the RCS

Calculation Number and Group	Penetration Description	Penetration Type	Valve Type Basis (see item 7 of Section 8.2)	Applicable Tech Spec 3.6.3 Condition (A or B)[1]	Completion Time (CT) Category Number	Justified CT
2. Group II,B (see Section 8.2.3.2)	Chemical & Volume Control System -Normal Letdown Legs: 3 valves IC, 1 normally open, 2 normally closed - 1 valve OC, normally open - all same valve type	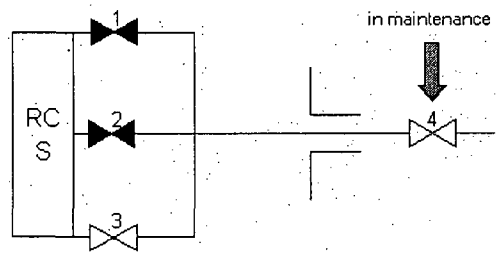	SOV MOV AOV Check	A B A B A B A B	4 11 4 11 4 11 4 11	24 hrs 24 hrs 24 hrs 24 hrs 24 hrs 24 hrs 24 hrs 24 hrs
		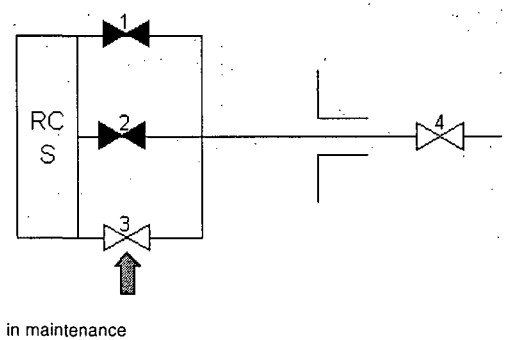	SOV MOV AOV Check	A A A A	4 4 4 4	24 hrs 24 hrs 24 hrs 24 hrs

Table D-2 (cont.) Tech Spec Category Identification: Class II - Penetration Flow Paths Connected to the RCS

Calculation Number and Group	Penetration Description	Penetration Type	Valve Type Basis (see item 7 of Section 8.2)	Applicable Tech Spec 3.6.3 Condition (A or B)[1]	Completion Time (CT) Category Number	Justified CT
		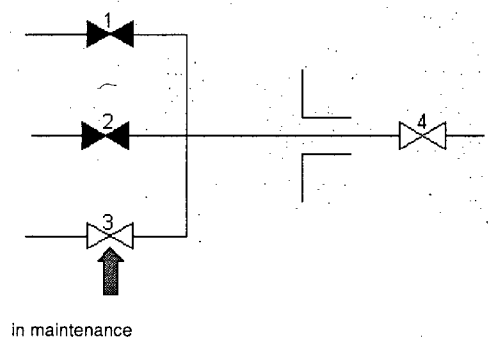	SOV	B	11	24 hrs
			MOV	B	11	24 hrs
			AOV	B	11	24 hrs
			Check	B	11	24 hrs
		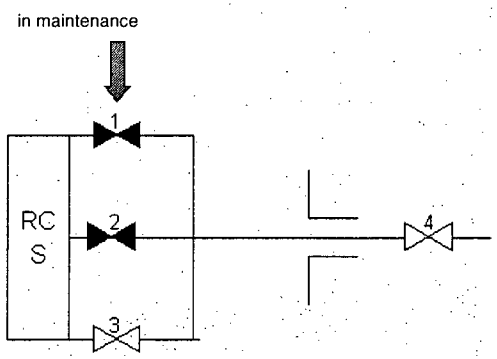	SOV	A	6	72 hrs
			MOV	A	7	168 hrs
			AOV	A	6	72 hrs
			Check	A	7	168 hrs

Table D-2 (cont.) Tech Spec Category Identification: Class II - Penetration Flow Paths Connected to the RCS

Calculation Number and Group	Penetration Description	Penetration Type	Valve Type Basis (see item 7 of Section 8.2)	Applicable Tech Spec 3.6.3 Condition (A or B)[1]	Completion Time (CT) Category Number	Justified CT
		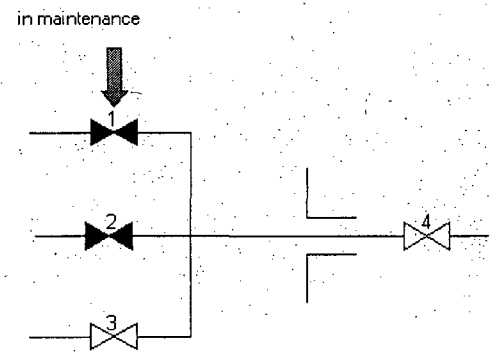	SOV MOV AOV Check	B B B B	14 14 14 14	168 hrs 168 hrs 168 hrs 168 hrs
3. Group II,B (see Section 8.2.3.2)	Chemical & Volume Control System - Charging Line: • 1 CIV IC normally open - 1 CIV OC, normally open - different valve types	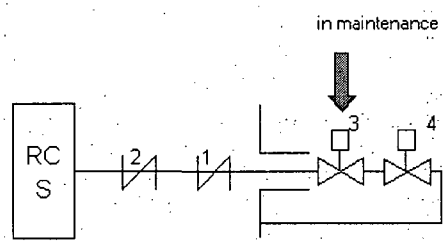	SOV MOV AOV Check	A A A A	7 7 7 7	168 hrs 168 hrs 168 hrs 168 hrs

Table D-2 (cont.) Tech Spec Category Identification: Class II - Penetration Flow Paths Connected to the RCS

Calculation Number and Group	Penetration Description	Penetration Type	Valve Type Basis (see item 7 of Section 8.2)	Applicable Tech Spec 3.6.3 Condition (A or B)[1]	Completion Time (CT) Category Number	Justified CT
	(The normally open CIV IC has 1 more normally open valves in series between it and the RCS, same valve type) (The normally open CIV OC has 1 more normally open valve downstream of it, same valve type)	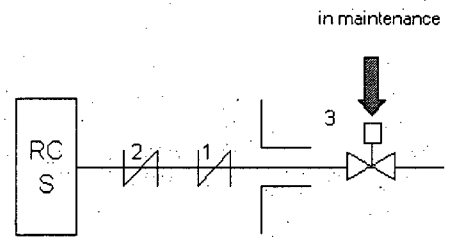	SOV MOV AOV Check	B B B B	14 14 14 14	168 hrs 168 hrs 168 hrs 168 hrs
		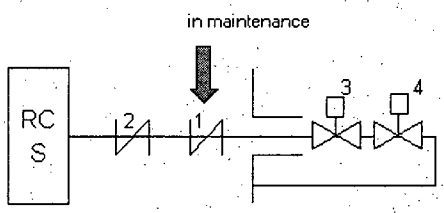	SOV MOV AOV Check	A A A A	7 7 7 7	168 hrs 168 hrs 168 hrs 168 hrs
		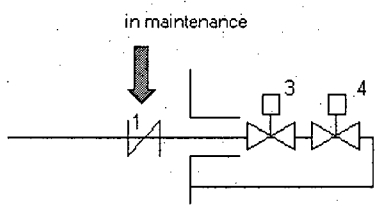	SOV MOV AOV Check	B B B B	14 14 14 14	168 hrs 168 hrs 168 hrs 168 hrs

Notes:

1. A – CIV pressure barrier intact
   B – CIV pressure barrier not intact

Table D-3 Tech Spec Category Identification: Class III - Penetration Flow Paths Connected to the SGs

Calculation Number and Group	Penetration Description	Penetration Type	Valve Type Basis (see item 7 of Section 8.2)	Applicable Tech Spec 3.6.3 Condition (A or B)[1]	Completion Time (CT) Category Number	Justified CT
1. Group III,A (see Section 8.2.4.1)	1 valve - normally closed (valve can be OC or IC)	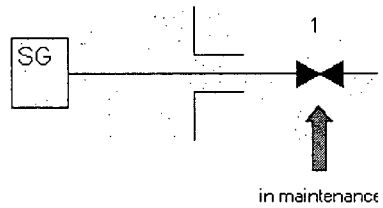	all	A B	2 9	8 hrs 8 hrs
		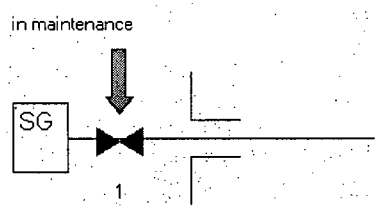	all	A	2	8 hrs
		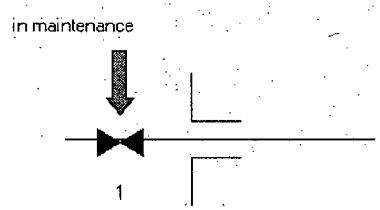	all	B	8	4 hrs

Table D-3 (cont.) Tech Spec Category Identification: Class III - Penetration Flow Paths Connected to the SGs

Calculation Number and Group	Penetration Description	Penetration Type	Valve Type Basis (see item 7 of Section 8.2)	Applicable Tech Spec 3.6.3 Condition (A or B)[1]	Completion Time (CT) Category Number	Justified CT
2. Group III,A (see Section 8.2.4.1)	1 valve - normally open (valve can be OC or IC)	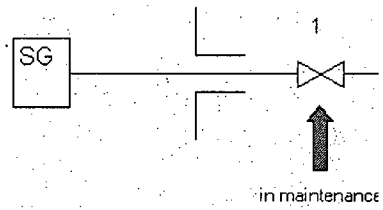	SOV	A	2	8 hrs
				B	9	8 hrs
			MOV	A	2	8 hrs
				B	9	8 hrs
			AOV	A	2	8 hrs
				B	9	8 hrs
			Check	A	2	8 hrs
				B	9	8 hrs
			SRV	A	2	8 hrs
				B	9	8 hrs
		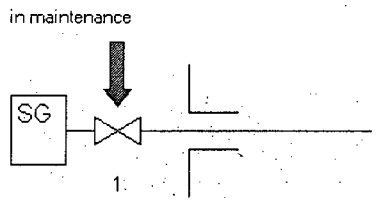	SOV	A	2	8 hrs
			MOV	A	2	8 hrs
			AOV	A	2	8 hrs
			Check	A	2	8 hrs
			SRV	A	2	8 hrs

Table D-3 (cont.) Tech Spec Category Identification: Class III - Penetration Flow Paths Connected to the SGs

Calculation Number and Group	Penetration Description	Penetration Type	Valve Type Basis (see item 7 of Section 8.2)	Applicable Tech Spec 3.6.3 Condition (A or B)[1]	Completion Time (CT) Category Number	Justified CT
		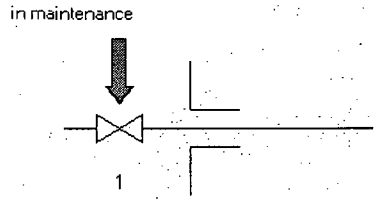	SOV	B	8	4 hrs
			MOV	B	8	4 hrs
			AOV	B	8	4 hrs
			Check	B	8	4 hrs
			SRV	B	8	4 hrs
1. Group III,B (see Section 8.2.4.2)	1 valve - normally open (valve can be OC or IC)	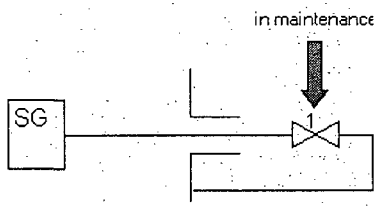	SOV	A	2	8 hrs
			MOV	A	2	8 hrs
			AOV	A	2	8 hrs
			Check	A	2	8 hrs
			SRV	A	2	8 hrs

Table D-3 (cont.) Tech Spec Category Identification: Class III - Penetration Flow Paths Connected to the SGs

Calculation Number and Group	Penetration Description	Penetration Type	Valve Type Basis (see item 7 of Section 8.2)	Applicable Tech Spec 3.6.3 Condition (A or B)[1]	Completion Time (CT) Category Number	Justified CT
			SOV	B	9	8 hrs
			MOV	B	9	8 hrs
			AOV	B	9	8 hrs
			Check	B	9	8 hrs
			SRV	B	9	8 hrs
		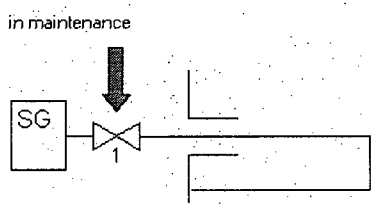	SOV	A	2	8 hrs
			MOV	A	2	8 hrs
			AOV	A	2	8 hrs
			Check	A	2	8 hrs
			SRV	A	2	8 hrs

Table D-3 (cont.) Tech Spec Category Identification: Class III - Penetration Flow Paths Connected to the SGs

Calculation Number and Group	Penetration Description	Penetration Type	Valve Type Basis (see item 7 of Section 8.2)	Applicable Tech Spec 3.6.3 Condition (A or B)[1]	Completion Time (CT) Category Number	Justified CT
		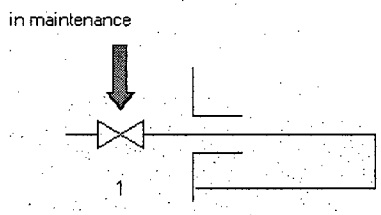	SOV	B	9	8 hrs
			MOV	B	9	8 hrs
			AOV	B	9	8 hrs
			Check	B	9	8 hrs
			SRV	B	9	8 hrs

Notes:

1. A – CIV pressure barrier intact
   B – CIV pressure barrier not intact

APPENDIX E

NRC/PWROG CORRESPONDENCE

NRC'S Requests for Additional Information

PWROG's Responses To The NRC'S Requests For Additional Information

UNITED STATES
NUCLEAR REGULATORY COMMISSION
WASHINGTON, D.C. 20555-0001

July 3, 2003

Mr. Gordon Bischoff, Project Manager
Westinghouse Owners Group
Westinghouse Electric Company
Mail Stop ECE 5-16
P.O. Box 355
Pittsburgh, PA 15230-0355

JUL 14 2003
WOG PROJECT OFFICE

SUBJECT: REQUEST FOR ADDITIONAL INFORMATION – WCAP-15791-P, "RISK-INFORMED EVALUATION OF EXTENSIONS TO CONTAINMENT ISOLATION VALVE COMPLETION TIMES" (TAC NO. MB5751)

Dear Mr. Bischoff:

By letter dated June 6, 2002, the Westinghouse Owners Group submitted for staff review Topical Report WCAP-15791, "Risk-Informed Evaluation of Extensions to Containment Isolation Valve Completion Times." The staff has completed its preliminary review of WCAP-15791-P and has identified a number of items for which additional information is needed to continue its review. The staff recently discussed this request for additional information (RAI) with Ken Vavrek of your staff, and it was agreed that a response would be provided within 15 days of receipt of this letter.

Pursuant to 10 CFR 2.790, we have determined that the enclosed RAI does not contain proprietary information. However, we will delay placing the RAI in the public document room for a period of ten (10) working days from the date of this letter to provide you with the opportunity to comment on the proprietary aspects only. If you believe that any information in the enclosure is proprietary, please identify such information line by line and define the basis pursuant to the criteria of 10 CFR 2.790.

If you have any questions, please call me at (301) 415-1436.

Sincerely,

Drew Holland, Project Manager, Section 2
Project Directorate IV
Division of Licensing Project Management
Office of Nuclear Reactor Regulation

Project No. 694

Enclosure: Request for Additional Information

cc w/encl: See next page

Westinghouse Owners Group Project No. 694

cc:
Mr. H. A. Sepp, Manager
Regulatory and Licensing Engineering
Westinghouse Electric Company
P.O. Box 355
Pittsburgh, PA 15230-0355

REQUEST FOR ADDITIONAL INFORMATION

WCAP-15791-P, "RISK-INFORMED EVALUATION FOR EXTENSIONS TO CONTAINMENT ISOLATION VALVE COMPLETION TIMES"

WESTINGHOUSE OWNERS GROUP

PROJECT NO. 694

1. Page 5-1 of WCAP-15791-P indicates that the containment isolation signals will not isolate systems required for accident mitigation. Please confirm that the emergency core cooling system, decay heat removal system, and their supporting systems do not contain any isolation valves which are either classified as containment isolation valves (CIVs) or are designed to be closed on containment isolation signals.

2. The topical report (TR) references a deterministic evaluation approach to determine the minimum penetration size that will result in a large release from containment atmosphere. The TR concludes that penetration pipe size diameters of 5", 6", and 3" can be screened out for sub-atmospheric, ice condenser, and dry ambient containment types. This result seems counter-intuitive, since for the same volumetric leak rate (%/day) a smaller containment should have a similar hole size. Also, these sizes are significantly larger than the 1" and 2" diameter line size criteria typically used in the methodologies to identify penetrations whose failures could result in a large early release.

   Please provide the following:

   a. An assessment of the impact of a line size screening criteria similar to the containment penetration screening criteria used in a typical probabilistic risk assessment (PRA) (e.g., a 2" line diameter). This should include an estimate of the number and types of lines in the size range between 2" and 6".

   b. Provide the details of the calculations performed to determine the pipe size screening criteria for one of the containment types. Explain how choked flow considerations are accounted for in the calculation.

   c. If a PRA-type screening criteria is not adopted, please provide the results of offsite consequence calculations demonstrating that early health effects would not occur given a severe accident with containment breach sizes equivalent to the screening criteria proposed in the TR.

3. The TR states that the impact on core damage frequency (CDF) and incremental conditional core damage probability (ICCDP) were not evaluated. The TR states that containment isolation is a function of containment response to an event and not the ability of the plant design to prevent or mitigate core damage. Provide an evaluation of the impact on CDF for the containment isolation configurations and systems associated with an accident mitigation function (engineered safety feature actuation system, sample lines, letdown, containment cooling, reactor coolant system (RCS) inventory control, or

containment sprays, for example. See pages 1-1, 8-2 of the TR). In addition, discuss the impact of an open system during maintenance activities (preventive maintenance or corrective maintenance (CM) (valve hardware removed, for example). Discuss the ICCDP associated with valves that also have a safety function (in addition to primary containment isolation) that are in a closed position during maintenance.

4. Discuss the applicability and basis for eliminating the distinction between penetration flow paths that contain two or more CIVs and penetration flow paths that contain one CIV and a closed system. This is discussed on page 1-2 of the TR.

5. The TR lists the types of containment penetrations as ;

   - Penetration flow paths connected to the containment atmosphere,
   - Penetration flow paths connected to the RCS, and
   - Penetration flow paths connected to the steam generators (SGs).

   Do these penetration classifications include non-primary connections, cooling lines, heat exchangers, etc.? Does RCS only include lines connected to the RCS pressure boundary? The list does not seem complete. See page 8-1 of the TR.

6. The TR states that only one valve can be in maintenance in a single penetration. Are additional valves in maintenance (additional penetrations) additive with respect to large early release frequency (LERF) and ΔLERF? See page 8-2 of the TR. The technical specifications appear to allow separate entry for each penetration. In addition, Tier 2 requirements are stated to not be applicable for the proposed allowed outage time (AOT) extension. Does this consider multiple valves out for maintenance at an increased AOT? Discuss the impacts of multiple simultaneous and sequential entries into the TS. This is related to Question 2.

7. Discuss common cause for only identical type valves. Discuss control circuits and associated hardware that may be the same for different valve types. What are the major contributors to spurious valve actuation? See page 8-3 of the TR.

8. The proposed AOT times appear to be calculated based on using the guidance in Regulatory Guide (RG) 1.174, "An Approach for Using Probabilistic Risk Assessment in Risk-Informed Decisions on Plant-Specific Changes to the Licensing Basis" and RG 1.177, "An Approach for Plant-Specific, Risk-Informed Decisionmaking: Technical Specifications," as a target and varying the AOT to fit the guidance of the RG. Discuss how the uncertainty of the calculated LERF and the incremental conditional large early release probability is accounted for in the proposed AOT results such that the guidance presented in RGs 1.174 and 1.177 is met.

9. The technical specification markups add the AOT times for various valve Categories 1 through 13. How are these categories related to the TR valve groups? See page A-3 of the TR.

10. The TR proposes a completion time of 168 hours to perform online preventive maintenance. Does the TR also assume CM will be performed such that CM risk impacts are also included in the evaluation?

-3-

11. CDF_T is stated to include internal events only. Please discuss considerations for external events including CDF_T and LERF. See Table 8.1 of the TR.

12. The following statement is on page 9-3:

> Note 3: CDF due to SGTR is not provided since WCGS has no containment penetrations from the SGs due to their containment boundary definition.

The staff does not understand how there could be no containment penetrations from the SGs due to their containment boundary definition. Provide a detailed explanation of this design concept.

Domestic Members
AmerenUE
Callaway
American Electric Power Co.
D.C. Cook 1 & 2
Arizona Public Service Co.
Palo Verde 1, 2 & 3
Constellation Energy Group
Calvert Cliffs 1 & 2
Dominion Nuclear Connecticut
Millstone 2 & 3
Dominion Virginia Power
North Anna 1 & 2
Surry 1 & 2
Duke Energy
Catawba 1 & 2
McGuire 1 & 2
Entergy Nuclear Northeast
Indian Point 2 & 3
Entergy Nuclear South
ANO 2
Waterford 3
Exelon Generation Company LLC
Braidwood 1 & 2
Byron 1 & 2
FirstEnergy Nuclear Operating Co.
Beaver Valley 1 & 2
FPL Group
St. Lucie 1 & 2
Seabrook
Turkey Point 3 & 4
Nuclear Management Co.
Kewaunee
Palisades
Point Beach 1 & 2
Prairie Island
Omaha Public Power District
Fort Calhoun
Pacific Gas & Electric Co.
Diablo Canyon 1 & 2
Progress Energy
H. B. Robinson 2
Shearon Harris
PSEG – Nuclear
Salem 1 & 2
Rochester Gas & Electric Co.
R. E. Ginna
South Carolina Electric & Gas Co.
V. C. Summer
Southern California Edison
SONGS 2 & 3
STP Nuclear Operating Co.
South Texas Project 1 & 2
Southern Nuclear Operating Co.
J. M. Farley 1 & 2
A. W. Vogtle 1 & 2
Tennessee Valley Authority
Sequoyah 1 & 2
Watts Bar 1
TXU Electric
Commanche Peak 1 & 2
Wolf Creek Nuclear Operating Corp.
Wolf Creek

International Members
Electrabel
Doel 1, 2, 4
Tihange 1 & 3
Electricité de France
Kansai Electric Power Co.
Mihama 1
Takahama 1
Ohi 1 & 2
Korea Hydro & Nuclear Power Co.
Kori 1 – 4
Ulchin 3 & 4
Yonggwang 1 - 5
British Energy plc
Sizewell B
NEK
Krško
Spanish Utilities
Asco 1 & 2
Vandellos 2
Almaraz 1 & 2
Ringhals AB
Ringhals 2 – 4
Taiwan Power Co.
Maanshan 1 & 2

February 13, 2004
WOG-04-077

WCAP-15791-P/NP
Project Number 694

U. S. Nuclear Regulatory Commission
Attention: Document Control Desk
Washington, DC 20555-0001

Attention: Chief, Information Management Branch
Division of Program Management

Subject: **Response to Request for Additional Information – WCAP-15791-P (Proprietary), "Risk-Informed Evaluation of Extensions to Containment Isolation Valve Completion Times," Tac No. MB5751 (MUHP-3010)**

In June 2002, the Westinghouse Owners Group (WOG) submitted WCAP-15791-P (Proprietary), "Risk-Informed Evaluation of Extensions to Containment Isolation Valve Completion Times," for approval (Ref. 1). In July 2003, the NRC issued a Request for Additional Information (RAI) concerning WCAP-15971-P (Ref. 2).

Enclosure 1 to this letter contains the responses to the RAIs. The attached RAI responses are non-proprietary. As noted in the responses to RAI questions, WCAP-15791 will be revised to incorporate the RAI responses. Revision 1 to WCAP-15791-P will be submitted to the NRC by March 31, 2004.

If you require further information, feel free to contact Mr. Ken Vavrek, Westinghouse Owners Group Project Office at 412-374-4302.

Sincerely,

Frederick P. "Ted" Schiffley, II
Chairman
Westinghouse Owners Group

Enclosure

WOG-04-077
February 13, 2004

cc: S. Dembek, NRC, Westinghouse
D. G. Holland, NRC (via Federal Express)
Management Committee
Steering Committee
Licensing Subcommittee
Project Management Office
J. D. Andrachek
C. B. Brinkman
G.R. Andre
J. A. Gresham
R.J. Lutz
V. A. Paggen
J. Perock

References:

1) WOG Letter OG-02-022, R. H. Bryan to US NRC Document Control Desk, "Transmittal of Reports: WCAP-15791-P, Rev. 0, (Proprietary) and WCAP-15791-NP, Rev. 0, (Non-Proprietary), Entitled Risk-Informed Evaluation of Extensions to Containment Isolation Valve Completion Times," June 6, 2002.

2) NRC Letter, NRC Letter, D. Holland (NRC) to G. Bischoff (Westinghouse), "Request for Additional Information – WCAP-15791-P, Risk-Informed Evaluation of Extensions to Containment Isolation Valve Completion Times," (TAC No. MB5751), July 3, 2003.

ENCLOSURE

Response to NRC's RAIs on WCAP-15791-P
"Risk-Informed Evaluation of Extensions to Containment Isolation Valve Completion Times"

RAI 1: Page 5-1 of WCAP-15791-P indicates that the containment isolation signals will not isolate systems required for accident mitigation. Please confirm that the emergency core cooling system, decay heat removal system, and their supporting systems do not contain any isolation valves which are either classified as containment isolation valves (CIVs) or are designed to be closed on containment isolation signals.

Response: In the Wolf Creek Updated Safety Analysis Report, Section 6.3, "Emergency Core Cooling System," Subsection 6.3.1.1, Safety Design Basis Six, states: "The capability to isolate components or piping was provided so that the ECCS safety function is not compromised. This includes isolation of components to deal with leakage or malfunctions and to isolate safety-related portions of the system (GDC-35)."

In addition, the penetrations associated with the emergency core cooling system (ECCS), decay heat removal system, and their supporting systems were reviewed to confirm that these systems do not contain any containment isolation valves which would close on a containment isolation signal and compromise the function of the mitigation system. Appendix C in WCAP-15791-P provides a listing of the WCGS containment penetrations. The CIVs and signals that each CIV receives are provided for each penetration. This information was reviewed to address this RAI.

Table RAI 1-1 provides a summary of this review and lists the penetrations associated with the emergency core cooling system (ECCS) and decay removal system. Within these systems are valves identified as CIVs. Many of these valves are on smaller lines that are used as drain lines, sample lines, and test lines. CIVs associated with these lines are either normally closed during plant operation or, if they may be open during plant operation, receive a containment isolation signal to ensure the containment is isolated when necessary. It was concluded from this review that there are no CIVs in the ECCS or decay heat removal system that receive a containment isolation signal that would compromise the accident mitigation function of the system. The CIVs that do receive containment isolation signals associated with these systems are in test lines.

The CIVs for penetrations in support systems for the ECCS and decay heat removal system were also reviewed. Penetration P-30 is associated with the compressed air system and CIV KAFV-29 receives a containment isolation signal. Isolating the air system has no impact on the CIVs in the penetrations associated with the ECCS and decay heat removal system since, as noted on Table RAI 1-1, the isolation valves in question fail to the closed (isolated) position.

Table RAI 1-1
Summary of ECCS and Decay Heat Removal System Penetrations with Containment Isolation Valves

Penetration Number	Penetration Description	CIVs That Receive a CI Signal	Purpose of CI Signal
P-14	Residual heat removal system, recirculation line	None	
P-15	Residual heat removal system, recirculation line	None	
P-21	Residual heat removal system, hot leg injection	EJHCV-8825 (AOV)	To isolate a ¾ inch test line – CIV fails closed
P-27	Residual heat removal system, cold leg injection	EJHCV-8890B (AOV)	To isolate a ¾ inch test line – CIV fails closed
P-48	High pressure SI system, hot leg injection	EMHV-8824 (AOV)	To isolate a ¾ inch test line – CIV fails closed
P-49	High pressure coolant injection system, cold leg injection	EMHV-8823 (AOV)	To isolate a ¾ inch test line – CIV fails closed
P-52	Residual heat removal system, RHR shutdown lines	None	
P-79	Residual heat removal system, RHR shutdown lines	None	
P-82	Residual heat removal system, cold leg injection	EJHCV-8890A (AOV)	To isolate a ¾ inch test line – CIV fails closed
P-87	High pressure coolant injection system, hot leg injection	EMHV-8881 (AOV)	To isolate a ¾ inch line – CIV fails closed
P-88	High pressure coolant injection system, boron injection to cold legs	EMHV-8843 (AOV)	To isolate a ¾ inch test line – CIV fails closed

RAI 2: The topical report (TR) references a deterministic evaluation approach to determine the minimum penetration size that will result in a large release from containment atmosphere. The TR concludes that penetration pipe size diameters of 5", 6", and 3" can be screened out for sub-atmospheric, ice condenser, and dry ambient containment types. This result seems counter-intuitive since for the same volumetric leak rate (%/day) a smaller containment should have a similar hole size. Also, these sizes are significantly larger that the 1" and 2" diameter line size criteria typically used in the methodologies to identify penetrations whose failures could result in a large early release.

Please provide the following:

2.a An assessment of the impact of a line size screening criteria similar to the containment penetration screening criteria used in a typical probabilistic risk assessment (PRA) (e.g., a 2" line diameter). This should include an estimate of the number and types of lines in the size range between 2" and 6".

Response: The impact of reducing the large release diameter from 6 inches to 2 inches based on the Wolf Creek plant specific application of WCAP-15791-P is as follows. This applies only to CIVs that are contained in a leakage path from the containment atmosphere. The CIVs that are contained in leakage paths from the reactor coolant system or steam generators are not affected, since they do not provide a leakage path from the containment atmosphere.

- The number of CIVs associated with connections to the containment atmosphere (only for maintenance activities with the pressure barrier function of the CIV intact) is 233.
- The number of CIVs in lines with a diameter of 2 inches or less is 174.
- The number of CIVs in lines with a diameter of 6 inches or less is 202.

The number of additional CIVs that would be impacted by reducing the large release diameter from 6 inches to 2 inches is 202 – 174 = 28. If the large release diameter were reduced from 6 inches to 2 inches, these 28 CIVs would not default to a 7 day (168 hour) Completion Time (CT) and PRA (ICLERP and ΔLERF) calculations would need to be performed to determine the appropriate CT. The CT could range from 4 hours to 7 days (168 hours), depending on the results of the PRA calculations.

To determine the CTs for these additional CIVs based on the PRA approach requires categorization of the CIV into the appropriate group and a PRA calculation. If the CIV(s) does not fall into any existing group, then a new group would need to be developed for that CIV(s) . After the new group(s) are developed and analyzed, CTs for the additional CIV(s) can be determined.

2.b Provide the details of the calculations performed to determine the pipe size screening criteria for one of the containment types. Explain how choked flow considerations are accounted for in the calculation.

Response: Following several detailed discussions with the Staff's reviewers of this WCAP on the offsite consequences associated with containment hole sizes, the WOG decided to default to a 2 inch hole size limitation to define the threshold for a large release, instead of further pursuing a hole size based on an alternate large release criteria. The 2 inch hole size has been used for screening in the development of containment isolation PRA models and is acceptable to the NRC. Due to this change in the approach to set the minimum penetration size that will result in a large release, a detailed response will not be provided to this RAI. However, as a result of the large release criteria change, the impacted CIVs will be re-analyzed via the probabilistic approach with the results provided in a revision to WCAP-15791.

2.c If a PRA-type screening criteria is not adopted, please provide the results of offsite consequence calculations demonstrating that early health effects would not occur given a severe accident with containment breach sizes equivalent to the screening criteria proposed in the TR.

Response: Following several detailed discussions with the Staff's reviewers of this WCAP on the offsite consequences associated with containment hole sizes, the WOG decided to default to a 2 inch hole size limitation to define the threshold for a large release, instead of further pursuing a hole size based on an alternate large release criteria. The 2 inch hole size has been used for screening in the development of containment isolation PRA models and is acceptable to the NRC. Due to this change in the approach to set the minimum penetration size that will result in a large release, a detailed response will not be provided to this RAI. However, as a result of the large release criteria change, the impacted CIVs will be re-analyzed via the probabilistic approach with the results provided in a revision to WCAP-15791.

RAI 3: The TR states that the impact on core damage frequency (CDF) and incremental conditional core damage probability (ICCDP) were not evaluated. The TR states that containment isolation is a function of containment response to an event and not the ability of the plant design to prevent or mitigate core damage. Provide an evaluation of the impact on CDF for the containment isolation configurations and systems associated with an accident mitigation function (engineered safety feature actuation system, sample lines, letdown, containment cooling, reactor coolant system (RCS) inventory control, or containment sprays, for example. See pages 1-1, 8-2 of the TR). In addition, discuss the impact of an open system during maintenance activities (preventive maintenance or corrective maintenance (CM) (valve hardware removed, for example)). Discuss the ICCDP associated with the valves that also have a safety function (in addition to primary containment isolation) that are in a closed position during maintenance.

Response:

Part 1: Provide an evaluation of the impact on CDF for the containment isolation configurations and systems associated with an accident mitigation function

Systems that are used for accident mitigation and which contain valves that perform a containment isolation function may impact core damage frequency (CDF) due to the possible longer CIV inoperability times that may now occur with the extended CIV CT. The availability of the mitigation function may be decreased with the increased CIV CT.

Some of the CIVs perform functions important to other safety systems and their inoperability can affect proper operation of these other safety systems. In the cases where a CIV is inoperable, and this inoperability impacts the operability of another function, the CT of the impacted system also needs to be considered. The shorter of the CTs, either the CIV CT or the CT of the impacted system, will be applicable. Two examples follow:

Example 1: Motor-operated valve (MOV) HV8811A is a CIV for penetration P-15 at WCGS (see WCAP-15791-P, Appendix C). It is also part of the emergency core cooling system (ECCS). As part of the ECCS, this MOV is in the flow path from the containment sump to a residual heat removal (RHR) pump. This valve is normally closed and is required to be closed during the ECCS injection phase when the RHR pump is taking suction from the refueling water storage tank (RWST). This valve then opens for cold leg recirculation when the RHR pump suction switches to the containment sump. If this valve is inoperable in the open position, then the applicable Technical Specification CIV and ECCS Actions would be entered. The CIV CT is 8 hours, from the WCGS plant specific analysis (see WCAP-15791-P, Table 10-1), and the ECCS CT is 72 hours. In this case, the limiting CT is the CIV CT of 8 hours.

Example 2: Air-operated valve EMHV-8824 is a CIV in penetration P-48 at WCGS (see WCAP-15791-P, Appendix C). This valve is also part of the ECCS, and is normally closed and used to isolate the RHR test line. If this valve is inoperable in the open position, then the CIV and the ECCS Actions would be entered. (This assumes that if this valve is open and inoperable, the ECCS is adversely impacted.) If it is open and inoperable, the CIV CT is 168 hours, from the WCGS plant specific analysis (WCAP-15791-A, Table 10-1), and the ECCS CT is 72 hours. In this case, the limiting CT is the ECCS CT of 72 hours.

The same rationale follows for other CIVs that can impact the operability of core damage mitigation systems or containment release mitigation systems. The more limiting, or shorter, CT determines the length of time the CIV can be inoperable. In all cases, the more limiting time will be equal to or less than the CT for the Technical Specification associated with the core damage or containment release mitigation function.

If the CIV CT is increased beyond the current 4 hour CT, there could be a small impact on CDF since the CIV(s) may be inoperable and in a position that impacts the function of the mitigation system for a longer period of time. Currently, CIV inoperability is limited by the CIV CT to 4 hours. For some CIVs this CT can be increased up to the CT of the other affected Technical Specification's CT. As noted above, this could be 72 hours for an inoperable ECCS train. This 72 hour limit would also apply for many other systems. Therefore, a mitigation system containing a valve that performs a CIV function and which can cause the mitigation system to be inoperable, may experience a small increase in unavailability. This is expected to be a very small impact since the majority of system unavailability is typically related to pumps.

The extended CIV CTs will only impact a limited number of systems since a CIV that is inoperable and cannot be closed for the CT, in many cases is in the correct position for its other safety function. For example, if a CIV in the service water flow path providing cooling to the containment coolers is inoperable in the open position, the containment cooling function is not impacted. The limited cases in which this is not true apply primarily to the ECCS, where several CIVs may be required to change position during the course of a LOCA event.

The impact of an inoperable CIV on CDF should consider both preventive and corrective maintenance activities. Preventive maintenance on a CIV would be expected to be done with other preventive maintenance activities associated with the train, such as, pump preventive maintenance activities. Therefore, preventive activities related to the CIVs are not expected to increase the unavailability of the associated train. Corrective maintenance activities on CIVs could impact the availability of a train of a mitigation system, therefore, corrective maintenance activities could have an impact on CDF. With the current 4 hour CT, the maintenance activity would need to be completed within 4 hours, but with the extended CT, the maintenance activity could go on up to the CT of the impacted system (72 hours for example).

The following is a bounding assessment of the potential impact on CDF due to the extended CIV CT. A simple and conservative approach to assess the potential impact on CDF is to determine the increase in system unavailability followed by a calculation for CDF. The ECCS will be used as an example.

It was conservatively estimated in the WCAP that the corrective maintenance frequency is 0.1/yr (see WCAP-15791-A, Table 8-1). Based on this, the CIV unavailability contribution from corrective maintenance activities to the unavailability of a single train of a safety system is:

- Current CT: 0.1/year x 4 hours/8760 hours/year = 4.6E-05
- Extended CT: 0.1/year x 72 hours/8760 hours/year = 8.2E-04.
  This assumes the full CT will be used for each corrective maintenance activity. This is conservative since many, if not all, maintenance activities are completed well within the CT.

Given the following:

- ECCS train unavailability: 5E-03
- Common cause failure probability across trains: $\beta = 0.1$
- ECCS train unavailability due to CIV inoperability with a 4 hour CT: 4.6E-05
- ECCS train unavailability due to CIV inoperability with a 72 hour CT: 8.2E-04
- Initiating event frequency for events requiring ECCS: 2E-03/yr
  (This includes the small, medium, and large LOCA events with mean frequencies of 1.5E-03/yr, 6.1E-05/yr, and 7.2E-06, respectively, from the NRC's Interim LOCA Frequencies. The sum of these frequencies is 1.57E-03/yr which has been rounded up to 2E-03/yr for this calculation.)

The CDF impact is calculated as follows:

- ECCS System Unavailability = Train 1 Unavailability x Train 2 Unavailability + Train Unavailability x β
- Case 1: 4 hour CT
  System unavailability = (5E-03 + 4.6E-05) x (5E-03 + 4.6E-05) + 5E-03 x 0.1 = 5.25E-04
- Case 2: 72 hour CT
  System unavailability = (5E-03 + 8.2E-04) x (5E-03 + 8.2E-04) + 5E-03 x 0.1 = 5.34E-04
- System unavailability increase = 5.34E-04 – 5.25E-04 = 9.0E-06
- CDF impact = Initiating event frequency x system unavailability increase = 2E-03/yr x 9.0E-06 = 1.8E-08/yr

The same calculation done with a typical ECCS train unavailability of 1E-02, instead of 5E-03, provides the following results:

- System unavailability increase = 1.12E-03 – 1.10E-03 = 2.0E-05
- CDF impact = 2E-03/yr x 2.0E-05 = 4.0E-08/yr

The same calculation done with a typical ECCS train unavailability of 5E-02, instead of 5E-03, provides the following results:

- System unavailability increase = 7.58E-03 – 7.50E-03 = 8.0E-05
- CDF impact = 2E-03/yr x 8.0E-05 = 1.6E-07/yr

These three values are well within the ΔCDF acceptance guideline of 1E-06/yr in Regulatory Guide 1.174. Therefore, the potential additional unavailability of the ECCS related to corrective maintenance activities during the extended CTs will have only a very small impact on plant risk.

Part 2: Discuss the impact of an open system during maintenance activities (preventive maintenance or corrective maintenance (CM) (valve hardware removed, for example))

Maintenance can be completed on a CIV with the valve remaining in the containment penetration line or with the valve removed from the containment penetration line. With the valve remaining in the penetration line, the pressure boundary function for the system impacted by the CIV is maintained. With the valve removed, the pressure boundary function is compromised. In the first case, the impacted system may be able to continue to operate (remain operable). In the second case, the impacted system is also inoperable and the shorter of the CTs of the applicable Technical Specifications is applied. This second case is discussed in Part 1 of this RAI response.

The situation in which the CIV is removed from the penetration line for maintenance was specifically considered and analyzed with regard to LERF and ICLERP as discussed in Section 8 of the WCAP. The CTs associated with this maintenance configuration are provided in the WCAP. The impact of this maintenance configuration on CDF was not evaluated in the WCAP, but is discussed in the following paragraphs for penetration flow paths connected to containment atmosphere and the RCS.

Penetration Flow Paths Connected to the Containment Atmosphere

These penetrations include all those that are not connected to the RCS or SGs, and include flow paths through containment that may be open or closed, inside or outside containment. A CIV in this type of penetration that remains in the penetration line, but is open and inoperable, is the same as a CIV that has been removed. In both cases, the CIV cannot isolate the penetration if it is required to do so. But with regard to the functioning or operability of the system associated with the CIV, the impact is different. With a CIV remaining in the penetration line, but open and inoperable, as discussed above in many cases the associated system is still operable. The system would be inoperable if the CIV is required to close or be closed for the system to function properly. An inoperable system, if it is a core damage mitigation system, can impact CDF. As discussed above, if the system is inoperable, then additional Technical Specifications need to be considered and the shorter of the CTs will be applicable. An assessment of the impact on CDF is provided above in Part 1 of this RAI response. This is also applicable to mitigation systems that are impacted by a CIV that is removed for maintenance. That is, with a CIV removed, the associated mitigation system is inoperable as well as the containment isolation function of the CIV, therefore, the shorter of the two CTs applies.

Penetration Flow Paths Connected to the RCS

CIVs in penetrations associated with systems connected to the RCS have the potential to impact CDF. If the CIV is open and inoperable, it will not be able to perform its isolation function as required. This impacts the frequency of an interfacing systems LOCA that bypasses containment. In this case, a core damage event becomes a large containment release. The CTs for these CIVs were set based on the LERF related acceptance criteria in Regulatory Guides 1.174 and 1.177. The LERF acceptance criteria are more limiting than the CDF acceptance criteria, therefore, if the LERF criteria are met, then the CDF criteria are also met. It's concluded from this that the CDF impact has already been considered for penetrations with flow paths connected to the RCS in which the CIV is intact, but in the open position and inoperable.

The situation when the CIV inside containment in the line connecting the system to the RCS has been removed can also impact CDF. In this case, an interfacing systems LOCA bypassing containment is no longer the concern. The interfacing system LOCA will exhaust into containment and can be mitigated. Therefore, there is an impact on CDF since there will be one less valve maintaining the RCS pressure boundary. The following provides a conservative ICCDP and CDF impact assessment.

ICCDP Assessment

- Assuming that a single closed valve is maintaining the RCS pressure boundary for the system of interest – there may be additional valves, but to provide a conservative and bounding assessment only one will be credited.
- This configuration will exist for 168 hours. This is the maximum CT that can be applied.
- Probability of the valve spuriously opening = 2E-07/hr (from WCAP-15791-P, Table 8-1, Note 1) Note that the larger of the two valve spurious opening values is used. A third value for check valve reverse leakage of 1E-06/hr was rejected for this calculation. This calculation is addressing a core damage event due to a LOCA, and check valve reverse leakage does not meet this requirement.
- Conditional core damage probability (conditional CDP) for a LOCA = 1E-02. This value represents the CDP given a LOCA event has occurred, and was obtained from a review of several WOG plant LOCA initiating event frequencies and CDF contributions for small, medium, and large LOCAs. The conditional CDPs ranged from 1.0E-02 to 1.4E-04. As an example, given a medium LOCA IE frequency of 1E-03/r and a medium LOCA CDF contribution of 4.3E-06/yr, the CDP is 4.3E-03 (4.3E-06/1E-03).
- LOCA IE frequency given the specific configuration = 2E-07/hr x 8760 hr/yr = 1.75E-03/yr

- LOCA CDF for this specific configuration = 1.75E-03/yr x 1E-02 = 1.75E-05/yr (this is the increase in CDF due to the specific configuration)
- ICCDP = Increase in CDF x CT = 1.75E-05 x 168/8760 = 3.36E-07

This meets the ICCDP acceptance guideline of 5E-07 in Regulatory Guide 1.177.

CDF Impact Assessment

The plant CDF will be impacted due to the longer period of time the plant can now spend in the configuration with a single valve providing the RCS pressure boundary in the system of interest (with the CIV removed from the penetration line).

- Assuming that a single closed valve is maintaining the RCS pressure boundary for the system of interest – there may be additional valves, but to provide a conservative and bounding assessment only one will be credited.
- This configuration will exist for 168 hours. This is the maximum CT that can be applied.
- Probability of valve spuriously opening = 2E-07/hr (from WCAP-15791-P, Table 8-1, Note 1) Note that the larger of the two valve spurious opening values is used. A third value for check valve reverse leakage of 1E-06/hr was rejected for this calculation. This calculation is addressing a core damage event due to a LOCA, and check valve reverse leakage does not meet this requirement.
- Initiating event frequency given this configuration = 2E-07/hr x 8760 hr/yr = 1.75E-03/yr
- Conditional core damage probability (conditional CDP) for a LOCA = 1E-02. This value represents the CDP given a LOCA event has occurred.
- CDF for operating in this configuration for a full year = IE freq. x CCDP = 1.75E-03/yr x 0.01 = 1.75E-05/yr
- Probability of operating in this configuration = 0.1 (from WCAP-15791-P, Table 8.1, Note 4)
- ΔCDF = 1.75E-05/yr x 0.1 activities/yr x (168 hrs/activity/8760 hrs/yr – 4 hrs/activity/8760 hrs/yr) = 3.3E-08/yr

This meets the ΔCDF acceptance guideline of 1E-06/yr in Regulatory Guide 1.174.

<u>Part 3: Discuss the ICCDP associated with the valves that also have a safety function (in addition to primary containment isolation) that are in a closed position during maintenance</u>

As discussed above, some of the CIVs perform functions important to other safety systems and their inoperability can affect the proper operation of these other safety systems. In the cases where a CIV is inoperable and the CIV inoperability impacts the operability of another function, the CT of the impacted system also needs to be considered. The shorter of the CTs, either the CIV CT or the CT of the impacted system, will be applicable.

Since the length of time a CIV can be inoperable will be limited by the shorter of the CIV CT or impacted safety system CT, the ICCDP for the safety system will not be impacted by the CIV CT extension. The ICCDP value will continue to be what already exists for the safety system CT.

RAI 4: Discuss the applicability and basis for eliminating the distinction between penetration flow paths that contain two or more CIVs and penetration flow paths that contain one CIV and a closed system. This is discussed on page 1-2 of the TR.

Response: Technical Specification 3.6.3, "Containment Isolation Valves", in NUREG-1431, Rev. 2 (Standard Technical Specifications, Westinghouse Plants) distinguishes between penetration flow paths with two (or more) containment isolation valves (Condition A) with a Completion Time (CT) of 4 hours and penetration flow paths with only one containment isolation valve and a closed system (Condition C) with a CT of 72 hours. This distinction allows crediting the passive isolation barrier (a closed system) for providing a longer CT.

WCAP-15791-P analyzes each penetration type separately with each CIV in each penetration evaluated individually. A penetration for a closed system with a single CIV is analyzed differently than a penetration with two (or more) CIVs. For example, Section 8.2.2.1 of the WCAP provides a sample calculation for determining the CT for a penetration for a system open inside and outside containment with two CIVs. Section 8.2.2.2 of the WCAP provides a sample calculation for determining the CT for a penetration for a system closed inside containment and open outside containment. Section 8.2.2.3 of the WCAP provides a sample calculation for determining the CT for a penetration for a system open inside containment and closed outside containment. Section 8.2.2.4 of the WCAP provides a sample calculation for determining the CT for a penetration for a system closed inside containment and closed outside containment.

Since specific analyses are done for each type of penetration and the results (extended CTs) are penetration and CIV specific, Technical Specification 3.6.3 was revised to reflect the actual penetration/system configuration. Therefore, the distinction between penetration flow paths that contain two or more CIVs, and penetration flow paths that contain one CIV and a closed system is no longer necessary.

RAI 5: The TR lists the types of containment penetrations as;

- Penetration flow paths connected to the containment atmosphere,
- Penetration flow paths connected to the RCS, and
- Penetration flow paths connected to the steam generators (SGs).

Do these penetration classifications include non-primary connections, cooling lines, heat exchangers, etc? Does RCS only include lines connected to the RCS pressure boundary? The list does not seem complete. See page 8-1 on the TR.

Response: All the lines that penetrate the containment can be classified into one of these three groups. This categorization is used to help decide the potential path to a release and the appropriate type of analysis to apply to the CIVs. The classification or category used is dependent on the specific penetration configuration.

Penetration flow paths connected to the RCS are those flow paths that can potentially be exposed to the RCS coolant pressure and temperature. These are lines connected to the RCS pressure boundary. Penetration flow paths connected to the SGs are those flow paths that can potentially be exposed to the SG secondary side coolant pressure and temperature. These lines are connected to the SG secondary side pressure boundary. The remaining containment penetrations are grouped into the category of penetration flow paths connected to the containment atmosphere. These penetrations flow paths may be open to the containment atmosphere or closed to it, but will not be exposed to RCS or SG secondary side conditions.

All the penetrations for a plant can be placed into one of these three categories. A system that is not connected to the RCS or SG secondary side, and closed to the containment atmosphere, such as a service water line providing coolant to the containment fan coolers, can potentially be exposed to the containment atmosphere via a pipe rupture of the service water line inside containment. However, this system cannot be exposed to RCS or SG secondary side conditions.

RAI 6: The TR states that only one valve can be in maintenance in a single penetration. Are additional valves in maintenance (additional penetrations) additive with respect to large early release frequency (LERF) and ΔLERF? See page 8-2 of the TR. The technical specifications appear to allow separate entry for each penetration. In addition, Tier 2 requirements are stated to not be applicable for the proposed allowed outage time (AOT) extension. Does this consider multiple valves out for maintenance at an increased AOT? Discuss the impacts of multiple simultaneous and sequential entries into the TS. This is related to Question 2.

Response: The analysis evaluates each CIV in each penetration individually and determines an acceptable Completion Time based on the ICLERP and ΔLERF for each CIV. It is assumed that only a single CIV is inoperable in one penetration flow path. If additional CIVs are also inoperable in other penetrations, then the total ΔLERF impact can be determined by summing the individual CIV ΔLERF increases. Therefore, the impact is additive with respect to LERF and ΔLERF.

TSTF-446, Revision 0, "Risk Informed Evaluation of Extensions to Containment Isolation Valve Completion Times (WCAP-15971)," proposed revisions to Technical Specification 3.6.3, "Containment Isolation Valves," in NUREG-1431, Rev. 2, and was transmitted to the NRC by an NEI letter dated October 21, 2002. The Technical Specification and Bases markups contained in TSTF-446 supercede the Technical Specification and Bases markups contained in Appendix A of WCAP-15791-P. TSTF-446 will be revised to be consistent the analysis in WCAP-15791-P that only evaluated a single inoperable CIV in one penetration flow path.

The Tier 2 discussion in Section 8.4 of WCAP-15791-P did not consider multiple CIVs out of service for maintenance at increased CTs. CIV inoperability is not expected to occur frequently and single CIV inoperabilities in multiple penetration flow paths are expected to occur less frequently. The Tier 2 discussion considers potential interactions between containment mitigation systems. Additionally, proposed Technical Specification 3.6.3 Condition C in TSTF-446 addresses multiple inoperable CIVs in the same penetration flow path.

Sequential CIV inoperabilities will be addressed consistent with the current practice that is used to address sequential SSC inoperabilities for any other SSCs contained in the Technical Specifications. This CIV CT extension evaluation does not change the current practice of sequential SSC inoperabilities.

RAI 7: Discuss common cause for only identical type values. Discuss control circuits and associated hardware that may be the same for different valve types. What are the major contributors to spurious valve actuations? See page 8-3 of the TR.

Response:

Common Cause Failure Modeling

Consistent with plant PRA models, the CIVs as modeled in this assessment include the valve, actuator, and local control circuitry. Also consistent with plant PRA models, common cause failure is included for similar types of valves performing the same function with the same failure mode. In this case, for example, common cause failure is included for two motor-operated valves of which either is required to close to isolate the penetration. Both would need to fail to close in order to fail penetration isolation, therefore, common cause is included across these valves. The same would be true for two air-operated valves or two check valves. Common cause is not typically included across different types of valves performing the same function even if they contain some similar elements, such as the control circuitry. This is primarily for two reasons:

- Data for failure of components is typically collected at the component level, not the subcomponent level. As noted above, the component level for a MOV includes the valve, actuator, and local control circuitry.
- Common cause failure of a component such as an MOV can be related to a number of issues, one is the mechanical/electrical failure of the component. Others include errors during valve re-assembly following maintenance activities and the inappropriate application of a valve. These common cause failure modes become very small contributors to common cause failure when different valves are considered in different applications.

Therefore, the common cause failure analysis applied in this assessment is consistent with methods typically used in current plant PRA models and risk-informed applications.

Spurious Valve Actuations

The causes of spurious valve actuations (i.e., position change) depend on the valve type to some extent. For example, a spurious signal may cause a MOV to change position, but this would not be applicable to a manually operated valve. The following lists typical causes for spurious valve actuations.

1. Failures of valve control circuits
2. Failures of power supplies
3. Mispositioned valves following maintenance or test activities
4. Spurious signals from actuating systems
5. Inadvertent operator actuations
6. Failures of air supplies (applicable to air-operated valves that fail open on loss of air, which is not a fail safe position for a CIV)

Note that checking valve positions of the operable CIVs in a penetration prior to starting CIV maintenance activities will identify any initially mispositioned valves. The concern with mispositioned valves is during the time period when performing the CIV maintenance activity. This is addressed in the analysis as shown in the example calculations in Section 8.2 of the WCAP.

RAI 8: The proposed AOT times appear to be calculated based on using the guidance in Regulatory Guide (RG) 1.174, "An Approach for Using Probabilistic Risk Assessment in Risk-Informed Decisions on Plant-Specific Changes to the Licensing Basis" and RG 1.177, "An Approach for Plant-Specific, Risk-Informed Decisionmaking: Technical Specifications," as a target and varying the AOT to fit the guidance of the RG. Discuss how the uncertainty of the calculated LERF and the incremental conditional large early release probability is accounted for in the proposed AOT results such that the guidance presented in RGs 1.174 and 1.177 is met.

Response: Uncertainty can be characterized as aleatory and epistemic. Uncertainties related to data are termed aleatory. This uncertainty is often associated with component failure rates and initiating event frequencies, for example. Epistemic uncertainty is related to model uncertainties and associated with, for example, assumptions and simplifications. Both are discussed in the following.

This analysis did not directly address data uncertainty by assigning distributions to the component failure rates, initiating event frequencies, etc. and then propagating them through to the results. However, the generic analysis indirectly addresses this component of uncertainty by using conservative values for the key parameters. The key parameters that form the basis of the analysis include:

- isolation valve failure rates
- core damage frequency from internal events
- core damage frequency from seismic events
- common cause failure factors

The values used for these parameters were obtained from WOG plant PRA models. The values for each parameter were compared across the plants and the most conservative values chosen. For example, the most conservative value for CDF from internal events is 7.8E-05/yr (see WCAP-15791-P, Table 8-1), which came from one plant, while the most conservative value for a motor-operated valve to fail to close is 1.09E-02/demand (see WCAP-15791-P, Table 8-1), which came from another plant. Using this approach provides an extremely conservative analysis, since the most conservative values for most parameters are used based on all the possible values in WOG member PRA models. This provides a bounding analysis that is applicable to all WOG plants, therefore, no data uncertainty analysis was necessary in the analysis.

This analysis did not directly address epistemic uncertainty. A review of all the PRA models considered when collecting the appropriate values for the parameters was not done to determine if the PRA models appropriately address this uncertainty source. But epistemic uncertainty is indirectly addressed by the approach used in the analysis to determine appropriate parameter values. Individual PRA models may contain sources of epistemic uncertainty, but the same source would most likely not carry across all WOG plants, and since the more conservative values for the parameters are used in the analysis, epistemic uncertainty should not be a concern.

Epistemic uncertainty of particular interest in this analysis is the CDF contribution from external events other than seismic. This primarily includes fire, external flooding, and high winds. Depending on the plant, these may or may not be a significant contributor to CDF. But the internal CDF value used in the analysis is relatively high, therefore, for most plants, if not all, this CDF value encompasses the CDF value including external events for the generic analysis.

The plant specific analysis was based on point estimates and did not consider a data uncertainty analysis that included propagating uncertainty distributions though the model and did not explicitly consider epistemic uncertainty sources. This was not done the following reasons:

- Wolf Creek is not considered an outlier with regard to plant/system/component performance. A comparison of Wolf Creek plant specific values for the parameters of interest in this analysis, indicates that the Wolf Creek values are typical in most cases and, for the most part, near the center of the data group or leaning in the conservative direction.

- Wolf Creek is a typical Westinghouse 4-loop, single unit site, that does not have unique features that would cause the plant risk to be abnormally different from other Westinghouse plants. No specific features exist that would result in unique plant specific initiators and no unique event mitigating features exist. In a cross comparison between Wolf Creek and similar plants, the important parameters, such as CDF, are typical.

- Of interest in the analysis are changes or delta values, that is, impact on LERF (or ΔLERF) and ICLERP, which looks at the difference between the base LERF with all CIVs available and the LERF with a CIV not available. In this situation, the uncertainties tend to drop out and have no impact on the decisionmaking process.

Based on this, an explicit uncertainty analysis was not done.

RAI 9. The Technical Specification markups add the AOT times for various valve Categories 1 thru 13. How are these categories related to the TR valve groups? See page A-3 of the TR.

Response: The Technical Specification markups containing the CIV Categories on page A-3 are not related to the WCAP valve groups. These Categories were used to "bin" the various valve groups with the same Completion Time into a common Category. This was done for presentation and usage purposes in the Technical Specifications. The CIVs are categorized according to the assigned (or justified) CT. All the CIVs with a 4 hour CT are Category 1 CIVs, all the CIVs with an 8 hour CT are Category 2 CIVs, and so forth. There may be various valve groups within the same Completion Time, making it impractical to develop a Technical Specification based on the valve groupings contained in WCAP-15791-P.

The valve groups, used in the WCAP, are used to combine similar type of penetrations for analysis purposes only. The analysis results are applied to plant specific penetrations and CIVs, with a CT assigned to each CIV. The CTs for the various groups can be 4 hours, 8 hours, 12 hours, 24 hours, 48 hours, 72 hours, or 7 days hours depending on the analysis results.

RAI 10: The TR proposes a completion time of 168 hours to perform online preventive maintenance. Does the TR also assume CM will be performed such that CM risk impacts are also included in the evaluation?

Response: The ICLERP analysis used in the WCAP is based on an analysis approach applicable to a corrective maintenance activity. That is, when a CIV is inoperable and there is a similar operable CIV in the penetration that is required to close to perform the isolation function, common cause failure of operable CIV is applied in the analysis. This will typically be the Beta value when using the Multiple Greek Letter approach to common cause failure analysis. That is, the probability of the operable CIV failing to close on demand is the Beta factor. This approach is the most conservative, that is, it results in the largest ICLERP value, and directly addresses corrective maintenance activities and encompasses preventive maintenance activities. With preventive maintenance activities, the ICLERP value will be based on the random failure probability for the operable CIV. Since the Beta factor (used assuming a common cause failure) is significantly greater that the random failure values, the CCF values will provide a more conservative result, that is, shorter Completion Times. Therefore, the results in the WCAP are based on the most conservative approach, and the Completion Time can be used for either corrective or preventive maintenance activities.

RAI 11: CDF_T is stated to include internal events only. Please discuss considerations for external events including CDF_T and LERF. See Table 8.1 of the TR.

Response: The analysis included the total CDF (CDF_T) from internal events. In addition, to analyze systems that are closed inside or outside containment, the analysis considered the CDF from seismic events as discussed in Section 8.2.2 of the WCAP. For the generic analysis, the CDF_T is 7.8E-05/yr. To ensure the CDF_T adequately covers both internal and external events, this value will be increased to 1E-04/yr. The generic probabilistic risk analysis will be re-done using a CDF_T value of 1E-04/yr. The new Completion Times will be provided in a revision to the WCAP.

To implement the generic analysis, licensees will need to demonstrate that their total plant CDF is equal to or less than 1E-04/yr. For the Wolf Creek Generating Station (WCGS) the CDF contributions are:

- $CDF_{\text{internal events less internal flooding}}$ = 5.5E-05/yr
- CDF_{fire} = 1.0E-05/yr
- $CDF_{\text{internal flooding}}$ = 2.5E-06/yr
- $CDF_{\text{other external events}}$ = screened out
- $CDF_{\text{total less seismic}}$ = 6.8E-05/yr

Seismic CDF was not calculated for WCGS, but a reduced scope seismic margins evaluation was completed. Based on the results of this evaluation, the seismic risk for WCGS is low and it is concluded that the total CDF for WCGS will be less than 1E-04/yr.

With regard to the plant specific analysis for WCGS, only the internal event CDF value was used for CDF_T. The plant specific probabilistic risk analysis for the CIVs in lines greater than 2 inches will be re-done using a CDF_T of 1E-04/yr. The new Completion Times will be provided in a revision to the WCAP.

RAI 12: The following statement is on page 9-3:

> Note 3: CDF due to SGTR is not provided since WCGS has no containment penetrations from the SGs due to their containment boundary definition.

The staff does not understand how there could be no containment penetrations from the SGs due to their containment boundary definition. Provide a detailed explanation for this design concept.

Response:

The following is taken from Chapter 6 of the WCGS USAR.

> SAFETY DESIGN BASIS SEVEN – Each line that penetrates the primary reactor containment and is neither part of the reactor coolant pressure boundary nor connected directly to the containment atmosphere has:
> a. At least one containment isolation valve which is either automatic, locked closed, or capable of remote manual operation; or
> b. Some other defined bases that meet the intent of containment isolation as an alternative to a above.

The steam generators are addressed via b above. As discussed in the USAR, the containment penetrations associated with the steam generators are not subject to GDC-57, since the containment barrier integrity is not breached. The boundary or barrier against fission product leakage to the environment is the inside of the steam generator tubes, the outside of the steam generator shell, and the outside of the lines emanating from the steam generator shell side.

As a note of clarification, WCGS has containment penetrations from the steam generator, but has no CIVs associated with these penetrations due to the justification provided above. Note 3 should read "CDF due to SGTR is not provided since WCGS has no CIVs in the containment penetrations from the SGs due to their containment boundary definition."

Domestic Members
AmerenUE
Callaway
American Electric Power Co.
D.C. Cook 1 & 2
Arizona Public Service Co.
Palo Verde 1, 2 & 3
Constellation Energy Group
Calvert Cliffs 1 & 2
R. E. Ginna
Dominion Nuclear Connecticut
Millstone 2 & 3
Dominion Virginia Power
North Anna 1 & 2
Surry 1 & 2
Duke Energy
Catawba 1 & 2
McGuire 1 & 2
Entergy Nuclear Northeast
Indian Point 2 & 3
Entergy Nuclear South
ANO 2
Waterford 3
Exelon Generation Company LLC
Braidwood 1 & 2
Byron 1 & 2
FirstEnergy Nuclear Operating Co.
Beaver Valley 1 & 2
FPL Group
St. Lucie 1 & 2
Seabrook
Turkey Point 3 & 4
Nuclear Management Co.
Kewaunee
Palisades
Point Beach 1 & 2
Prairie Island 1 & 2
Omaha Public Power District
Fort Calhoun
Pacific Gas & Electric Co.
Diablo Canyon 1 & 2
Progress Energy
H. B. Robinson 2
Shearon Harris
PSEG – Nuclear
Salem 1 & 2
South Carolina Electric & Gas Co.
V. C. Summer
Southern California Edison
SONGS 2 & 3
STP Nuclear Operating Co.
South Texas Project 1 & 2
Southern Nuclear Operating Co.
J. M. Farley 1 & 2
A. W. Vogtle 1 & 2
Tennessee Valley Authority
Sequoyah 1 & 2
Watts Bar 1
TXU Electric
Commanche Peak 1 & 2
Wolf Creek Nuclear Operating Corp.
Wolf Creek

International Members
Electrabel
Doel 1, 2, 4
Tihange 1 & 3
Electricité de France
Kansai Electric Power Co.
Mihama 1
Takahama 1
Ohi 1 & 2
Korea Hydro & Nuclear Power Co.
Kori 1 – 4
Ulchin 3 & 4
Yonggwang 1 - 5
British Energy plc
Sizewell B
NEK
Krško
NOK
Kernkraftwerk Beznau
Spanish Utilities
Asco 1 & 2
Vandellos 2
Almaraz 1 & 2
Ringhals AB
Ringhals 2 – 4
Taiwan Power Co.
Maanshan 1 & 2

March 10, 2005
WOG-05-119

WCAP-15791-P, Rev. 1
Project Number 694

Document Control Desk
U.S. Nuclear Regulatory Commission
Washington, DC 20555-0001

Subject: Westinghouse Owners Group
Response to the NRC Request for Additional Information (RAI) Regarding Review of WCAP-15791-P, Rev. 1, (Proprietary), "Risk-Informed Evaluation of Extensions to Containment Isolation Valve Completion Times" (PA-LSC-0029) (MUHP-3010)

The purpose of this letter is for the Westinghouse Owners Group to provide a formal response to the Request for Additional Information (RAI) issued by the NRC regarding their review of WCAP-15791-P, Rev. 1, (Proprietary), "Risk-Informed Evaluation of Extensions to Containment Isolation Valve Completion Times". The RAI was received by the WOG December 13, 2004 and contained two questions. The responses to these questions are provided in the attachment in support of finalizing your review and issuing a draft Safety Evaluation. No portion of these RAI responses contain proprietary information.

If you have any questions regarding this information, please feel free to call Mr. Steven DiTommaso of the Westinghouse Owners Group Program Management Office at 412-374-5217.

Very truly yours,

S. DiTommaso approving for T. Schiffley
Official record electronically approved in EDMS 2000

Frederick P. "Ted" Schiffley, II
Chairman, Westinghouse Owners Group

mjl

Attachment

March 10, 2005
WOG-05-119

cc: WOG Steering Committee
WOG Licensing Subcommittee
G. Shukla, USNRC (via Federal Express)
C. Doutt, USNRC (via Federal Express)
WOG Project Management Office
J. Andrachek, Westinghouse
G. Andre, Westinghouse
K. Vavrek, Westinghouse

Attachment to WOG-05-119
Responses to the NRC's RAIs on WCAP-15791-P, Rev. 1

The following two RAI questions were received by the WOG from the NRC on December 13, 2004. Each question is followed by the WOG response.

RAI 1: A Tier 3 program ensures that while a CIV is in an LCO condition, additional activities will not be performed that could further degrade the capability of the plant to respond to a condition the inoperable CIV or system was designed to mitigate, and as a result, increase plant risk beyond that assumed by the Topical Report analysis. Tier 3 programs, as implemented by the maintenance rule of 10 CFR 50.65(a)(4) during CIV maintenance are to: (1) ensure that additional maintenance does not increase the likelihood of an initiating event intended to be mitigated by the out-of-service equipment, (2) evaluate the effects of additional equipment out-of-service during CIV maintenance activities that would adversely impact CIV CT risk such as from redundant systems or components, and (3) evaluate the impact of maintenance on equipment or systems assumed to remain operable by the CIV CT analysis.

The staff is concerned that configuration risk management as implemented under the maintenance rule is inadequate to evaluate the risk impact of CIVs in maintenance or repair such that the assumptions of WCAP-15791 remain valid. The extension of the CTs for CIVs generally does not have a significant impact on CDF but does impact LERF/ICLERP (containment isolation). The TS allow multiple condition entry for CIVs but the topical report analyses are based on a single PCIV CT and therefore cumulative risk must also be evaluated for multiple PCIV LCOs. Plant TIER 3 programs that are based on the maintenance rule generally do not provide a quantitatively or qualitatively assessment of LERF. WCAP-15791 provide limited, if any, guidance on performing a TIER 3 LERF analysis either for single or multiple CIV CTs. Quantitative risk assessment is not required by the maintenance rule and in general the TIER 3 assessment is done with only a level 1 CDF analysis. Since the extension of a CIV CT mainly impacts LERF/ICLERP it is the staff's concern that the evaluation of CIVs in a TIER 3 configuration risk management program is limited in that the configuration risk assessment may be incomplete for CIVs in maintenance or repair (only a quantitative or qualitative CDF assessment with a limited qualitative LERF/ICLERP assessment).

A review of the NEI Guidance 93-01, revision 2, Section 11.3.7.1 as endorsed by RG 1.1821 states that qualitative methods is an acceptable approach for establishing risk management actions for (a)(4) assessments in general. Section 11.3.7.2 provides guidance on establishing action thresholds based in part on the EPRI PSA applications guide EPRI-TR-105396. NEI-93-01 guidance states that an acceptable alternative for (a)(4) implementation would include establishing ICDP and ILERP risk management action thresholds. NEI-93-01 also states that due to differences in plant type and design, there is acknowledged variability in baseline core damage frequency and large early release frequency. Further, there is variability in containment performance that may impact the relationship between baseline core damage frequency and baseline large early release frequency for a given plant or class of plants. Finally 93-01 states that therefore, the determination of the appropriate method or combination of methods as discussed above (as presented in 93-01), and the corresponding quantitative risk management action thresholds are plant unique activities.

The topical report WCAP-15791 implementation of RG 1.177 Tier 3 guidelines generally implies the assessment of risk with respect to CDF. However, the proposed CIV CT impacts containment isolation and consequently LERF as well as CDF. Therefore, a licensee's CRMP, including those implemented under the maintenance rule of 10 CFR 50.65(a)(4), must be enhanced to include a LERF methodology/assessment and must be documented in a licensee's plant-specific submittal. Provide a discussion on the LERF methodology to be employed by WCAP-15791 TIER 3 assessments on a plant specific basis as part of topical report WCAP-15791 implementation.

WOG-05-119

Response 1:

PRA Quality

All plant PRA models provide the capability to assess Large Early Release Frequency (LERF). As part of the industry's program to peer review each plant PRA model, the modeling to assess LERF was reviewed, and Facts and Observations (F&Os) identified. The F&Os identify deficiencies and strengths in analysis and modeling on different aspects of the PRA model. F&Os with a significance level of A or B are addressed in the short-term since they impact the quality of the PRA model. F&Os with a significance level of C or D are either technical suggestions or editorial. These F&Os are not required to be addressed in the short-term since they are not likely to significantly affect results or conclusions. Licensees are addressing A and B level findings in the short-term and some have already completed this activity.

The peer review of the Level 2/LERF model addressed a number of different areas including:

- Guidance
- Success criteria
- Level 1/Level 2 interface
- Phenomena considered
- Human error probabilities and system performance
- Containment capability assessment
- Endstate definition
- LERF definition
- Containment event tree

Licensees that implement the Containment Isolation Valve (CIV) Completion Time extensions justified in WCAP-15791-P, Rev. 1 will commit to addressing their peer review A and B F&Os that impact the LERF assessment. This will ensure the appropriate level of quality for LERF assessments to meet the Tier 3 requirement in Regulatory Guide 1.177.

LERF Assessment Approach

Licensees implementing the CIV Completion Time extensions will commit to ensuring that the LERF assessments address the following:

- Containment large early releases via containment penetrations
- Containment bypass large early releases via interfacing systems LOCAs
- Containment bypass large early releases via steam generator tube ruptures
- Containment integrity failure due to other plant specific vulnerabilities as identified in the plant specific IPE and follow-up PRA model enhancements

The modeling of each release pathway may be included in the PRA model. For pathways that are not modeled, a surrogate pathway can be used provided it accurately represents the pathway under consideration. An accurate representation will require that the surrogate penetration configuration matches the penetration under consideration including the number and types of CIVs, and the CIV failure rates.

The attachment to this RAI response provides an approach for assessing the large early release frequency impact from inoperable CIVs. This approach addresses:

WOG-05-119

- inoperable CIVs in penetrations to the containment airspace and in bypass lines
- multiple inoperable CIVs
- inoperable CIVs with other equipment inoperable

Following this approach will enable a licensee to determine when a quantitative, plant specific, large early release assessment will be required, and when the quantitative assessment is already addressed by the analysis contained in WCAP-15791-P, Rev. 1 ("Risk-Informed Evaluation of Extensions to Containment Isolation Valve Completion Times"). The quantitative assessments are only required if the CIV CT extensions justified in WCAP-15791-P, Rev. 1 are implemented.

Guidance to Ensure that LERF Assessments are Performed

Section 11.3.7.2, "Establishing action thresholds based on quantitative considerations," of NUMARC 93-01, Revision 3 ("Industry Guideline for Monitoring the Effectiveness of Maintenance at Nuclear Power Plants") states: "The thresholds for risk management actions may be established quantitatively by considering the magnitude of increase of the core damage frequency (and/or large early release frequency) for the maintenance configuration." This provides direction to licensees on the need for LERF assessments.

TSTF-359 requires that licensees adopting the change commit to follow Regulatory Guide 1.182, "Assessing and Managing Risk Before Maintenance Activities at Nuclear Power Plants," in the Tech Spec Bases. Regulatory Guide 1.182 endorses NUMARC 93-01, Revision 3, which requires that LERF be assessed. Licensees adopting the CIV Completion Time extensions will commit to follow Regulatory Guide 1.182 in the Tech Spec Bases, which would require that LERF be assessed.

NRC Maintenance Rule Inspection Procedure and Draft Maintenance Rule Significance Determination Process

NRC Inspection Procedure 71111.13, "Maintenance Risk Assessments and Emergent Work Control," provides inspection guidance on the verification of the performance of maintenance risk assessments, the adequacy of risk assessments, and the management of the resulting risk. Appendix A of NRC Inspection Procedure 71111.13 provides a flow chart for the simplified 50.65 (a)(4) oversight. Block 14 of this chart addresses consideration of containment, external, and internal events. The detailed guidance for Block 14 - Did the RA (Risk Assessment) Consider Containment Integrity, External Events and Internal Flooding and Should They Have Been Considered (11.3.4) states for Containment: "The RA may need to consider circumstances which could affect the ability of the containment to perform its function as a fission product barrier. These would include (1) whether new containment bypass conditions are created, or the probability of containment bypass conditions is increased; (2) whether new containment penetration failures that can lead to loss of containment isolation are created; and (3) if maintenance is performed on SSCs of the containment heat removal system (or SSCs upon which this function is dependent), whether redundant containment heat removal trains should be available." Block 14 of NRC Inspection Procedure 71111.13 ensures that maintenance activities that could impact containment will be addressed. Section 02.01 (Risk Assessment and Management of Risk) requires the verification of "performance of RAs when required by §50.65(a)(4) and in accordance with licensee procedures, ..." Therefore, licensees that committed to NUMARC 93-01, Rev. 3, via Regulatory Guide 1.182 are required to perform an assessment of LERF impact.

Additionally, Draft Appendix K, "Maintenance Risk Assessment and Risk Management Significance Determination Process," to NRC Inspection Manual Chapter 0609, "Significance Determination Process," includes an item, "Licensee risk assessment failed to consider SSCs that prevent containment failure such

WOG-05-119

as containment isolation valves…," in Table 1, "Inspector Screening Checklist." Section 1.0, of Attachment 1 in Draft Appendix K states: "The intent of paragraph (a)(4) is for licensees to appropriately assess the risks of proposed maintenance activities that will be affected by external events, internal flooding, or containment integrity."

In conclusion, LERF will be adequately assessed for the CIV Completion Time extensions based on the above discussion.

WOG-05-119

ATTACHMENT TO RAI RESPONSE 1

Approach for Assessing the LERF Impact for an Inoperable Containment Isolation Valve (CIV)

Figure 1 provides the process to assess the LERF/LERP impact of inoperable CIVs. This process addresses the inoperability of 1 or more CIVs that could be in penetrations connected to the containment airspace or in a containment bypass line. Each box in the approach is discussed in the following.

Block 1. This block is the entry point for the approach; a CIV is inoperable.

Block 2. This block sorts on other inoperable components. If there are no other inoperable components, the path leads to block 3. If there are other inoperable components, including other inoperable CIVs, the path leads to block 4, 10, or 12, depending on the other components that are inoperable.

Block 3. If the only inoperable component is a CIV, then the analysis in WCAP-15791-P, Rev. 1 is applicable. The CT listed for this CIV is taken directly from the WCAP analysis which assumed only one inoperable CIV. The WCAP analysis assessed the impact on LERF and ICLERP, therefore, the configuration is acceptable and no additional evaluation is required to meet the Tier 3 requirement.

Block 4. This path is followed if the one CIV in a penetration to the containment airspace is inoperable and other equipment (not another CIV) is also inoperable, such as an auxiliary feedwater pump. In this situation the CDF may be increased due to the additional component inoperability. This additional inoperability, and potentially increased CDF, may not be explicitly covered by the analysis and should be considered.

Block 5. This block sorts on the CIV size. A containment hole size of 2 inches in diameter is the threshold for a large release; a hole size less than or equal to a 2 inch diameter will not result in a large release.

Block 6. If the diameter of the CIV is less than or equal to 2 inches, then a large release is not possible. Therefore, regardless of the potential impact on CDF of the additional inoperable component(s) the WCAP analysis is applicable, the configuration (with regard to large early release) is acceptable, and no additional large early release evaluation is required to meet the Tier 3 requirement.

Block 7. This block sorts on the CDF of the specific plant configuration under consideration. The WCAP generic analysis assumed a total CDF of 1E-04/yr. If a plant specific analysis was completed, then this plant specific value needs to be considered in this block.

Block 8. If the configuration specific CDF is less than or equal to the value used in the analysis (1E-04/yr in the generic analysis or a plant specific CDF if a plant specific analysis was completed), then the WCAP analysis is applicable, the configuration (with regard to large early release) is acceptable, and no additional large early release evaluation is required to meet the Tier 3 requirement.

Block 9. If the configuration specific CDF is greater than the value used in the analysis (1E-04/yr in the generic analysis or a plant specific CDF if a plant specific analysis was completed), then a large early release assessment for the plant specific configuration will need to be completed to meet the Tier 3 requirement.

Block 10. This path is followed if the CIV is located in a containment bypass line and other equipment (not another CIV) is also inoperable. In this situation, the large early release parameters may be impacted, not by the CIV in the bypass line which is covered by the WCAP analysis, but in conjunction with the increased CDF from the additional inoperable equipment and containment isolation failure.

WOG-05-119

Block 11. Due to the combination of an inoperable CIV in a containment bypass line and other inoperable equipment impacting the plant CDF, and LERF via containment isolation failure, a large early release assessment for the plant specific configuration will need to be completed to meet the Tier 3 requirement.

Block 12. This path is followed if two or more CIVs are inoperable in difference penetrations. The same path is followed whether or not additional equipment (not CIVs) is also inoperable.

Block 13. This path is followed if all the inoperable CIVs are in penetrations to the containment airspace, with or without additional equipment inoperable. The WCAP analysis only considered one inoperable CIV at a time. Therefore, except for the exception in block 14, large early release assessments are required.

Block 14. This block sorts on the effective CIV size. A containment hole size of 2 inches in diameter is the threshold for a large release; a hole size less than or equal to a 2 inch diameter will not result in a large release.

Block 15. If the effective diameter of the CIV is less than or equal to 2 inches, then a large release is not possible. Therefore, regardless of the potential impact on CDF of the additional inoperable component(s) the WCAP analysis is applicable, the configuration (with regard to large early release) is acceptable, and no additional large early release (a)(4) evaluation is required to meet the Tier 3 requirement.

where: effective diameter = $((\text{diameter hole } 1)^2 + (\text{diameter hole } 2)^2 + (\text{diameter hole } 3)^2 + \ldots)^{0.5}$

Block 16. If the effective diameter is greater than 2 inches, then a large release is possible. Since the WCAP analysis only considered single inoperable CIVs, a large early release assessment for the plant specific configuration will need to be completed to meet the Tier 3 requirement.

Block 17. This path is followed if the inoperable CIVs are located in different containment bypass lines, with or without additional equipment inoperable.

Block 18. Since the WCAP analysis only considered a single inoperable CIV, a large early release assessment for the plant specific configuration will need to be completed to meet the Tier 3 requirement.

Block 19. This path is followed if the inoperable CIVs are located in a combination of bypass lines and penetrations to the containment airspace. This could impact one or more bypass lines and one or more penetrations to the containment airspace.

Block 20. This block sorts on the effective diameter for the CIVs in penetrations to the containment airspace. A containment effective hole size of 2 inches in diameter is the threshold for a large release; a containment effective hole size less than or equal to a 2 inch diameter will not result in a large release.

Block 21. This block further sorts on the number of bypass lines impacted by the inoperable CIVs.

Block 22. If only one bypass line is impacted by the inoperable CIVs, and the effective diameter for the CIVs in penetrations to the containment airspace is ≤ 2 inches per block 20, then the WCAP analysis is applicable, the configuration (with regard to large early release) is acceptable, and no additional large early release evaluation is required to meet the Tier 3 requirement.

Block 23. Since the WCAP analysis only considered a single inoperable CIV, a large early release assessment for the plant specific configuration will need to be completed to meet the Tier 3 requirement.

WOG-05-119

Figure 1
Approach for Assessing LERF for an Inoperable Containment Isolation Valve

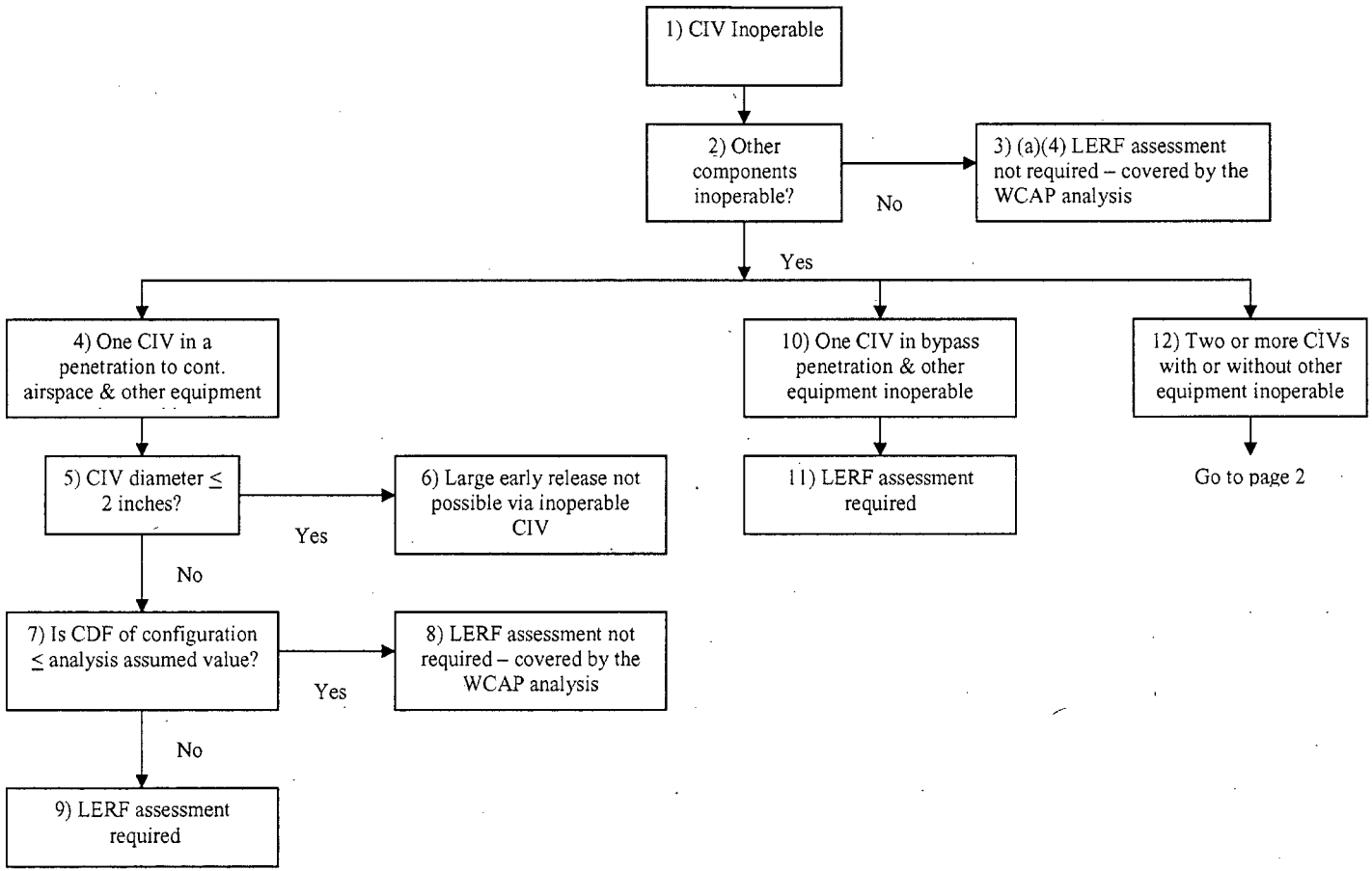

WOG-05-119

Figure 1 (Cont'd)
Approach for Assessing LERF for an Inoperable Containment Isolation Valve

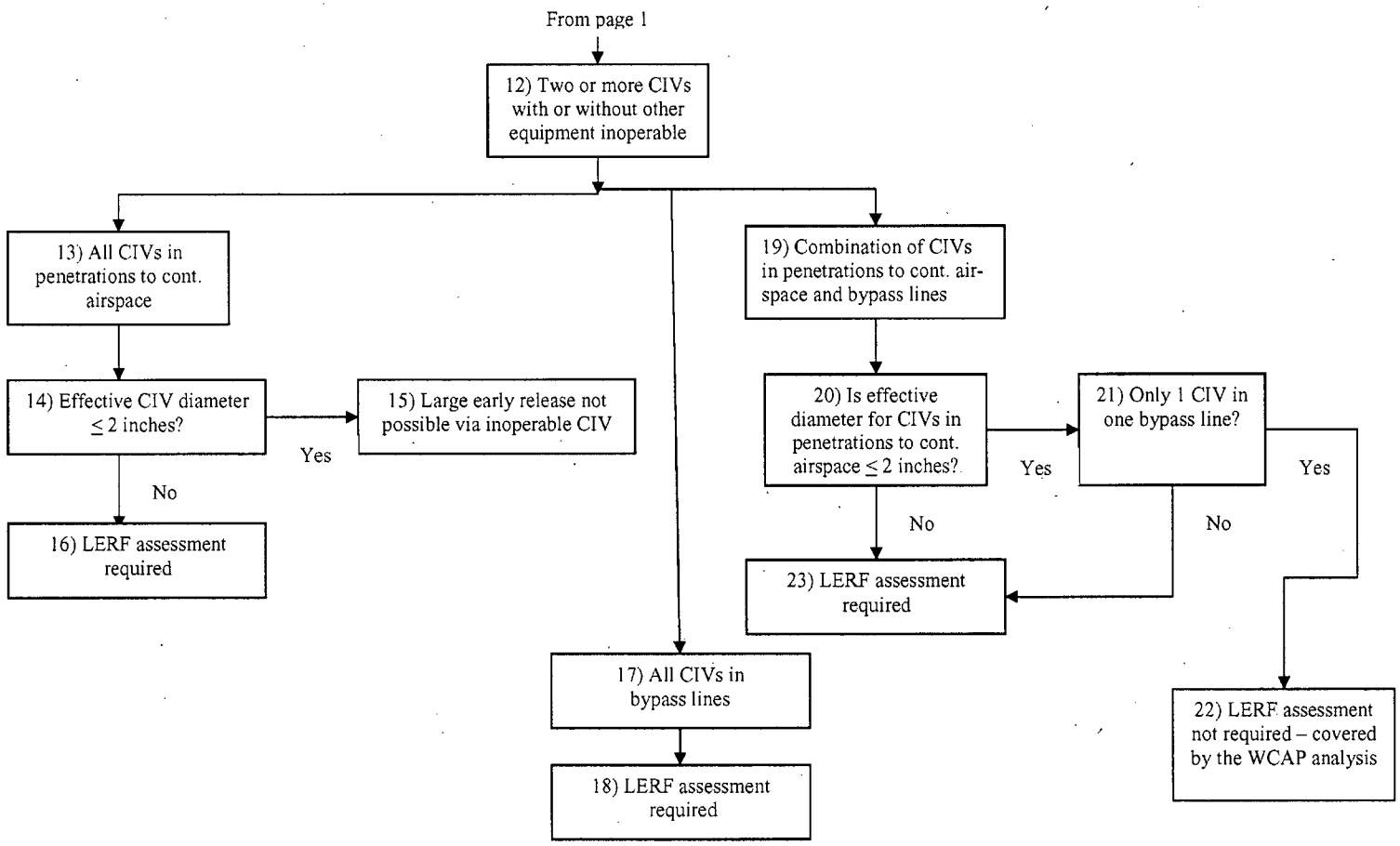

WOG-05-119

RAI 2: To ensure the applicability of WCAP-15791 to a licensee's plant, additional information on PRA quality is required by the staff in the following areas.

i. The plant-specific PRA reflects the as-built, as-operated plant.
ii. Applicable PRA updates including IPE/IPEEE findings.
iii. Conclusions of the peer review including any facts and observations (A,B, and C) applicable to the proposed CIV extended CTs.
iv. PRA quality assurance programs/procedures.
v. PRA adequacy and completeness with respect to evaluating the proposed CIV CT extension risk and applicability to the plant specific submittal.
vi. RG 1.200, "An Approach for Determining the Technical Adequacy of Probabilistic Risk Assessment Results for Risk-Informed Activities," for trial use. Although intended for trial use in a pilot program to finalize staff guidance on PRA quality, guidance is provided to address PRA technical adequacy that licensees may find useful in the application of WCAP-15791.

Provide a discussion on the PRA quality assessment as part of topical report WCAP-15791 implementation for the proposed application and TIER 3 evaluation.

Response 2: This will need to be addressed on a plant specific basis. However, the following is appropriate information that can be provided by the licensees for each area identified by the Staff.

i. *The plant-specific PRA reflects the as-built, as-operated plant.*

The licensee should provide a statement that the plant specific PRA reflects the as-built, as-operated plant. If it doesn't, then the licensee should identify the discrepancies and identify those differences that may impact the results of any Tier 3 analyses related to the CIV Completion Time (CT) extensions. Identification of these differences is not important in applying the WCAP results to the plant, since a generic analysis was used, but it may be important in conducting Tier 3 analyses.

ii. *Applicable PRA updates including IPE/IPEEE findings.*

The licensee should provide a concise listing of PRA updates that have been completed since the completion of the IPE and IPEEE. Only major changes in each update are required. Included should be updates to address IPE/IPEEE findings.

iii. *Conclusions of the peer review including any facts and observations (A,B, and C) applicable to the proposed CIV extended CTs.*

It is only necessary to consider significance level A and B F&Os. Significance level C F&Os are technical suggestions and are not required to be addressed in the short-term since they are not likely to significantly affect results or conclusions. Licensees are addressing A and B level findings in the short-term and some have already completed this activity. It is recommended that only significant level A and B F&Os that have not been addressed and that are applicable to the proposed CIV CT extensions be provided. For each F&O provided, the potential impact on the Tier 3 evaluations supporting the CIV CT extensions should be discussed.

iv. *PRA quality assurance programs/procedures.*

A discussion of the plant's applicable PRA quality assurance programs/procedures and their relevance to maintaining PRA quality should be provided.

WOG-05-119

v. *PRA adequacy and completeness with respect to evaluating the proposed CIV CT extension risk and applicability to the plant specific submittal.*

The appropriate approach to address this depends on whether the generic analysis is applied or a plant specific analysis is used. The plant specific analysis is used only if a licensee is interested in extending the CTs beyond those justified in the generic analysis.

Generic Analysis: To demonstrate that the generic analysis is applicable, a licensee will need to compare the plant specific PRA parameters to those used in the WCAP analysis. This includes the parameters listed on Tables 9-1a, 9-1b, 9-1c, and 9-1d of the WCAP which are total CDF, seismic CDF, component random and common cause failure rates, and maintenance unavailability values. A statement, or series of statements, should be provided concerning the quality of the plant specific parameters used in the comparison and why they are adequate. This statement will reference any appropriate Peer Review A and B F&Os.

Plant Specific Analysis: To perform a plant specific analysis, a licensee will rerun the analysis using plant specific input parameters. This is only done by licensees interested in extending the CTs beyond those justified in the generic analysis. The parameters of interest are those provided in Tables 9-1a, 9-1b, 9-1c, and 9-1d of the WCAP. Again, these are values for total CDF, seismic CDF, component random and common cause failure rates, and maintenance unavailability values. A statement, or series of statements, should be provided concerning the quality of the plant specific parameters used in the analysis and why they are adequate. This statement will reference any appropriate Peer Review A and B F&Os.

vi. *RG 1.200, "An Approach for Determining the Technical Adequacy of Probabilistic Risk Assessment Results for Risk-Informed Activities," for trial use. Although intended for trial use in a pilot program to finalize staff guidance on PRA quality, guidance is provided to address PRA technical adequacy that licensees may find useful in the application of WCAP-15791.*

As noted, RG 1.200 is only available for trial use, therefore, the adequacy of this Regulatory Guide is unknown. The current state-of-the-art quality measure for assessing the technical adequacy of the plant PRA models are the plant Peer Reviews. Item iii above addresses the Peer Review conclusions and A and B F&Os, therefore, it is not necessary for licensees to provide any additional information.

WOG-05-119

Program Management Office
4350 Northern Pike
Monroeville, Pennsylvania 15146

December 21, 2007

OG-07-544

WCAP-15791-P, Rev 2, Draft (Proprietary)
Project No. 694

To: Document Control Desk
U. S. Nuclear Regulatory Commission
Washington, DC 20555-0001

Subject: **Comments on the Draft Safety Evaluation for WCAP-15791-P, Revision 2, Draft "Risk-Informed Evaluation of Extensions to Containment Isolation Valve Completion Times", (MUHP-3010/PA-LSC-0029/LSC-0135R1)**

Reference:
1. NRC Letter, S. Rosenberg to G. Bischoff, "Draft Safety Evaluation for Westinghouse Owners Group (WOG) Topical Report (TR) WCAP-15791-P, Revision 2, "Risk-Informed Evaluation of Extensions to Containment Isolation Valve Completion Times" (TAC NO. MD3834)", November 1, 2007.

The purpose of this letter is to provide comments on the Draft Safety Evaluation (Reference 1) for WCAP-15791-P, Revision 2, Draft "Risk-Informed Evaluation of Extensions to Containment Isolation Valve Completion Times".

Please contact Christine DiMuzio at 412-374-5680 to discuss the proposed changes to this Draft Safety Evaluation.

Sincerely yours,

Christine DiMuzio for T. Schiffley

Frederick P. "Ted" Schiffley, II, Chairman
Pressurized Water Reactor Owners Group

FPS:CAD:sv

Attachment

cc: Licensing Subcommittee Steering Committee

S. Peters, NRC (via FedEx)
J. D. Andrachek
C. B. Brinkman
PMO

S. Rosenberg, NRC (via FedEx)
G.R. Andre
J. A. Gresham

Attachment

Table 1: PWROG Review Comments on the NRC's Draft Safety Evaluation on WCAP-15791-P, Rev. 2 dated November 1, 2007		
Comment Number	**Page/Line**	**Comment**
1	Page 13 Lines 8-9	It is stated "Plant-specific applications will need to discuss whether and how the above assumptions are incorporated in their plant (1) operating practices, procedures, and TSs, and (2) PRA models". This statement is inconsistent with item #1 in Section 5 which states "Address how the first, third, and sixth items of the general assumptions of WCAP-15791, which are listed in Section 3.2 in the SE, are incorporated in the specific plant practices, procedures, TS, and PRA." It is suggested that the sentence on lines 8-9 be modified as follows "Plant-specific applications will need to discuss whether and how the first, third, and sixth assumptions are incorporated in their plant (1) operating practices, procedures, and TSs, and (2) PRA models." Note that the revised words are underlined.
2	Page 13 Lines 13-15	It is stated "..., Proposed Condition D addresses an inoperable CIV in more than one penetration flow path and limits the CT to four hours." Proposed Condition D limits all but one CIV to 4 hours. The CT for one CIV is allowed to be greater than 4 hours. For clarification purposes, it is suggested that this sentence be modified as follows "..., Proposed Condition D addresses an inoperable CIV in more than one penetration flow path and limits the CT for all but one CIV to four hours" Note that the revised words are underlined.
3	Page 16 Lines 13-16	It is stated "A licensee that implements WCAP-15791 must demonstrate by its plant-specific application, the applicability of the WCAP-15791 input parameter assumptions with respect to ΔCDF, ΔLERF, ICCDP, and ICLERP to their particular plant." It is only necessary to demonstrate the applicability of WCAP-15791 input parameter assumptions if the generic results in the WCAP are being applied. Therefore, the following change is suggested "A licensee that implements the generic results in WCAP-15791...". Note that the revised words are underlined.
4	Page 18 Lines 24-27	It is stated "Plant-specific CIV reliability and availability will be monitored and assessed..." As noted in previous PWROG comments, it is not necessary to monitor and assess reliability. The CIV reliability is not impacted by the proposed CT changes. Therefore, it is suggested that "reliability and" be removed from this sentence. This statement will then be consistent with Item 7 in Section 5.0 of the Safety Evaluation.
5	Page 21 Lines 10-11	It is stated "Licensees have confirmed that (1) the generic WOG PRA values used for the Tier 1 evaluations in WCAP-15791 envelope the PRA values for their plants...". This statement is almost duplicative of the statement on Page 20, Lines 41-43 (both are bullets in Section 3.5). The difference is that the statement on Page 20, Lines 41-43 specifies that this applies to licensees that apply the generic results, which is correct. It is suggested that the statement on Page 21, Lines 10-11 be deleted since it is incorrect and, if it was corrected, it would duplicate what is already stated.

OG-07-544

Page 1 of 2

Attachment

6	Page 22 Line 14	Suggest adding the underlined words in the following sentence to be consistent with Section 3.2 and Section 8.2 of the WCAP. "Address how the first, third, and sixth items of the basis and general assumptions..."
7	Page 22 Lines 43-45	It should be specified that this PRA quality requirement is only required for the Tier 3 evaluations to be consistent with Page 15, Line 4. Suggest replacing the word "this" with "Tier 3" in the following sentence "Verify that the plant-specific PRA quality is acceptable for this application...". The revise sentence will be "Verify that the plant-specific PRA quality is acceptable for Tier 3 applications...".
8	Page 23 Line 38-39	It is stated "CIV reliability and availability will also be monitored...". The words "reliability and" should be removed from this sentence. This statement will then be consistent with Item 7 in Section 5.0 of the Safety Evaluation and the WCAP.
9	Page 23 Lines 41-42	It should be specified that this PRA quality requirement is only required for the Tier 3 evaluations to be consistent with Page 15, Line 4. It suggested that the underlined words be added to the sentence "...that PRA quality is adequate for Tier 3 evaluations as part of the basis...".

OG-07-544

Page 2 of 2