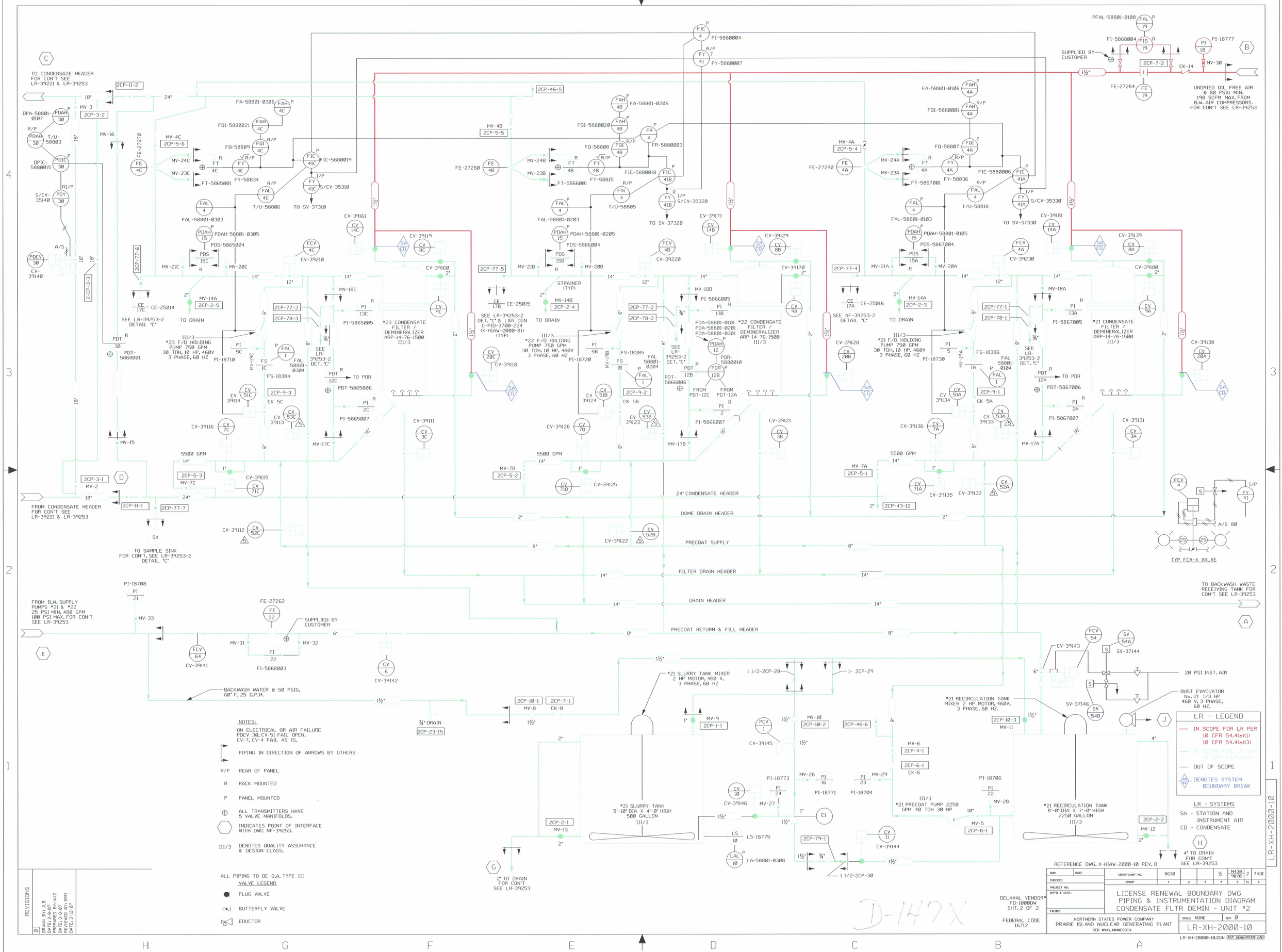

...\Flows\LR-XH-2000-10.DGN 3/19/2007 8:40:36 AM