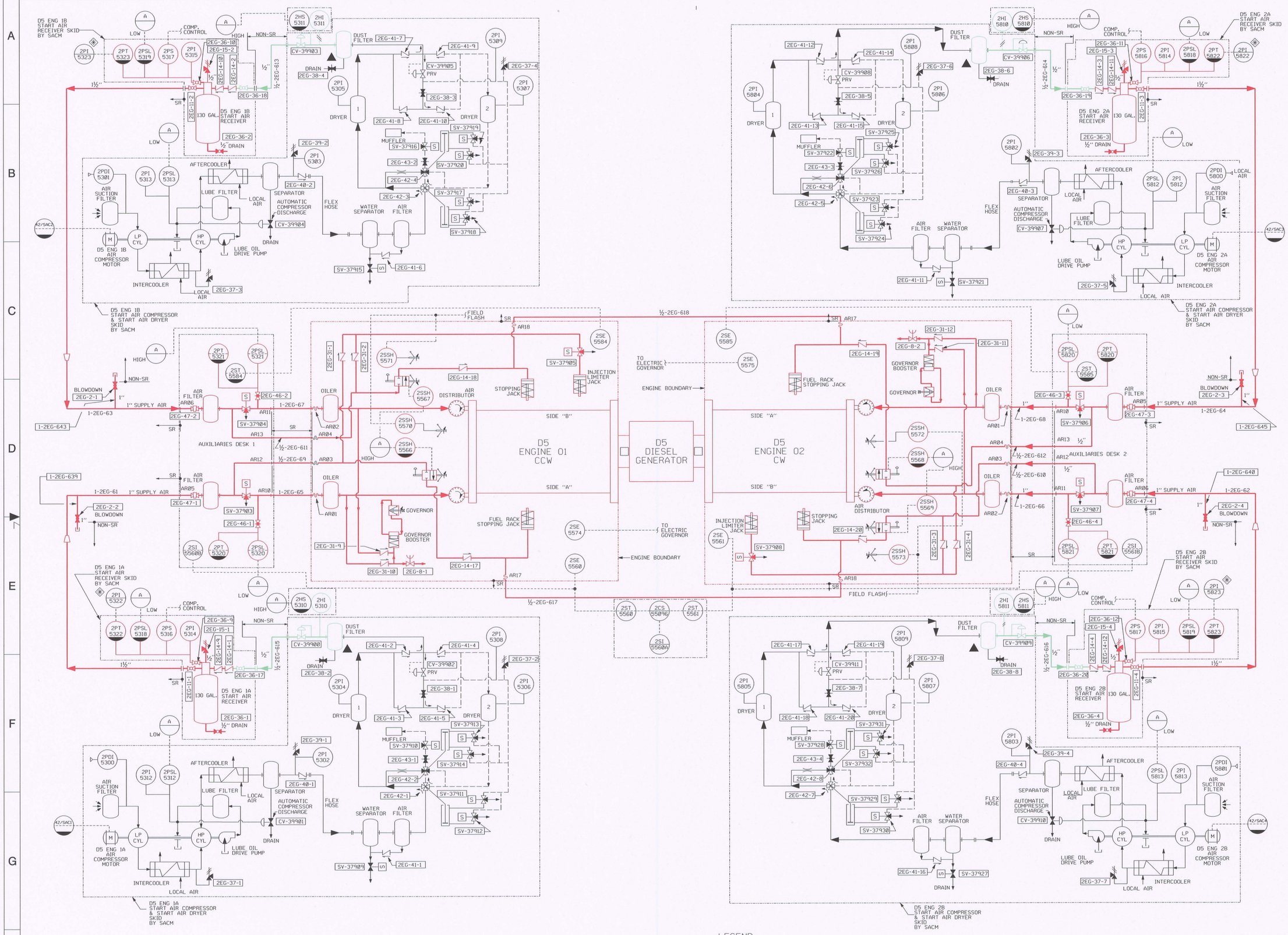

REVISIONS

0	DRAWN BY: JLB DATE: 1-30-07 PREPARED BY: MLR DATE: 1-30-07 REVIEWED BY: SRM DATE: 1-30-07

LR - NOTE

▲ - ANCHOR

LR - LEGEND

- IN SCOPE FOR LR PER 10 CFR 54.4(a)(1) 10 CFR 54.4(a)(3)
- IN SCOPE FOR LR PER 10 CFR 54.4(a)(2)
- OUT OF SCOPE
- DENOTES SYSTEM BOUNDARY BREAK

LR - SYSTEM

DG - DIESEL GENERATOR & SUPPORT SYSTEMS

REFER TO SPECS :

HIAW - 02400-66	(ERECTION)
HIAW - 02400-79	(SUPPORTS)
HIAW - 02400-80	(MATERIAL)
HIAW - 02400-81	(VALVES)

LEGEND:

- ---------- DENOTES SACM MANUFACTURERS STANDARDS.
- SR — DENOTES SAFETY RELATED ASME III
- NON-SR — DENOTES NON-SAFETY RELATED ANSI B31.1
- ◈ — DENOTES VALVES AND INSTRUMENTS FURNISHED WITH EQUIPMENT BY SACM PER HIAW-02610. (MANUFACTURERS STANDARDS).
- -·-·-·- INSTRUMENTATION BOUNDED BY AND ENCLOSED BY THIS LINE REPRESENTS SACM SUPPLIED INSTRUMENTATION.

NOTES:

NUCLEAR SAFETY RELATED ITEMS ARE SHOWN ON THIS DRAWING.

D-106

REFERENCE DWG. NF-118250 REV. B

This map / document is a tool to assist employees in the performance of their jobs. Your personal safety is provided for by using safety practices, procedures and equipment as described in safety training programs, manuals and SPAR's.

DWN	DATE	SIGNIFICANT NO.	8630		410	2	4410	1	8300
CHECKED		GROUP	1	2	3	4	5	CL	6
PROJECT NO.									
APP'D & CERT.									
FILMED									

LICENSE RENEWAL BOUNDARY DWG
DIESEL GENERATOR D5
STARTING AIR FLOW DIAGRAM UNIT 2

NORTHERN STATES POWER COMPANY
Xcel Energy
PRAIRIE ISLAND NUCLEAR GENERATING PLANT
RED WING, MINNESOTA

SCALE ---- REV 0

LR-118250

$$USERNAME$$ $$$$$$SYTIME$$$$$$$$$$$$SYDATE$$$$$$ $$$$$$$$$$DESIGNFILE$$$$$$$$$

LR-118250.DGN NSP GENERATION CAD

...\Flows\LR-118250.DGN 1/31/2007 2:04:28 PM