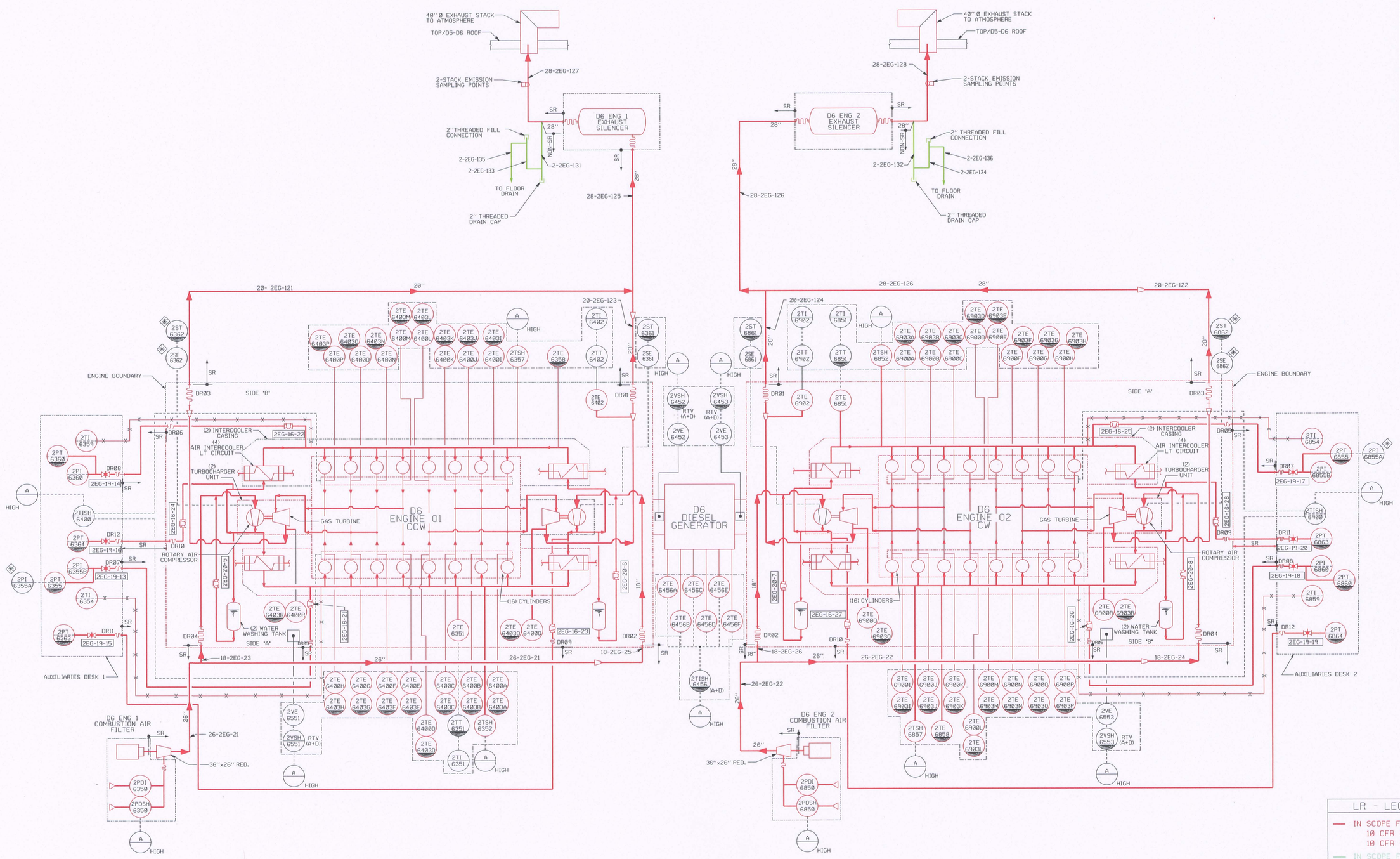

REVISIONS

0
DRAWN BY: JLB
DATE: 1-30-07
PREPARED BY: MLR
DATE: 1-30-07
REVIEWED BY: SRM
DATE: 1-30-07

1
REMOVED THE LR FROM
REFER TO SPECS
DRAWN BY: JLB
DATE: 8-6-07
PREPARED BY: WJI
DATE: 8-6-07
REVIEWED BY: SRM
DATE: 8-22-07

2
REMOVED HIGHLIGHTS FROM 2 TISH 6400 AND 2 TISH 6900.
DRAWN BY: JLB
DATE: 11-27-07
PREPARED BY: WJI
DATE: 11-27-07
REVIEWED BY: SRM
DATE: 11-29-07

LR - LEGEND

- IN SCOPE FOR LR PER 10 CFR 54.4(a)(1) 10 CFR 54.4(a)(3)
- IN SCOPE FOR LR PER 10 CFR 54.4(a)(2)
- OUT OF SCOPE
- DENOTES SYSTEM BOUNDARY BREAK

LR - SYSTEM

DG - DIESEL GENERATOR & SUPPORT SYSTEMS

LEGEND :

- DENOTES VALVES AND INSTRUMENTS FURNISHED WITH EQUIPMENT BY SACM PER LR-XH-02610. (MANUFACTURERS STANDARD).
- (A+D) DENOTES ANALOG & DIGITAL COMPUTER INPUT.
- DENOTES SACM MANUFACTURERS STANDARDS.
- SR DENOTES SAFETY RELATED ASME III
- NON-SR DENOTES NON-SAFETY RELATED ANSI B31.1
- INSTRUMENTATION BOUNDED BY AND ENCLOSED BY THIS LINE REPRESENTS SACM SUPPLIED INSTRUMENTATION.

NOTES:

NUCLEAR SAFETY RELATED ITEMS ARE SHOWN ON THIS DRAWING.

REFER TO SPECS:

XH-02400-66 (ERECTION)
XH-02400-79 (SUPPORTS)
XH-02400-80 (MATERIALS)
XH-02400-81 (VALVES)

REFERENCE DWG. NF-118241 REV. B

This map / document is a tool to assist employees in the performance of their jobs. Your personal safety is provided for by using safety practices, procedures and equipment as described in safety training programs, manuals and SPAR's.

I hereby certify that this plan, specification or report was prepared by me or under my direct supervision and that I am a duly Registered Professional Engineer under the laws of the State of Minnesota.
JR MACKEY
Date 6-18-90 Reg. No. 20549

D-097

DWN	DATE	SIGNIFICANT NO.	8630		410	2	4410	1	2140
CHECKED		GROUP	1	2	3	4	5	CL	6
PROJECT NO.									
APP'D & CERT.									
FILMED									

LICENSE RENEWAL BOUNDARY DWG
FLOW DIAGRAM UNIT 2
COMBUSTION AIR INTAKE & EXHAUST
DIESEL GENERATOR D6

NORTHERN STATES POWER COMPANY
Xcel Energy
PRAIRIE ISLAND NUCLEAR GENERATING PLANT
RED WING, MINNESOTA

SCALE NONE REV 2
LR-118241

$$USERNAME$$
$$$$$$SYTIME$$$$$$$$$$$$SYDATE$$$$$$
$$$$$$$$$DESIGNFILE$$$$$$$$$

LR-118241.DGN NSP GENERATION CAD

LR-118241