REVISIONS
0
DRAWN BY: JLB
DATE: 2-22-07
PREPARED BY: WJO
DATE: 2-22-07
REVIEWED BY: SRM
DATE: 2-23-07

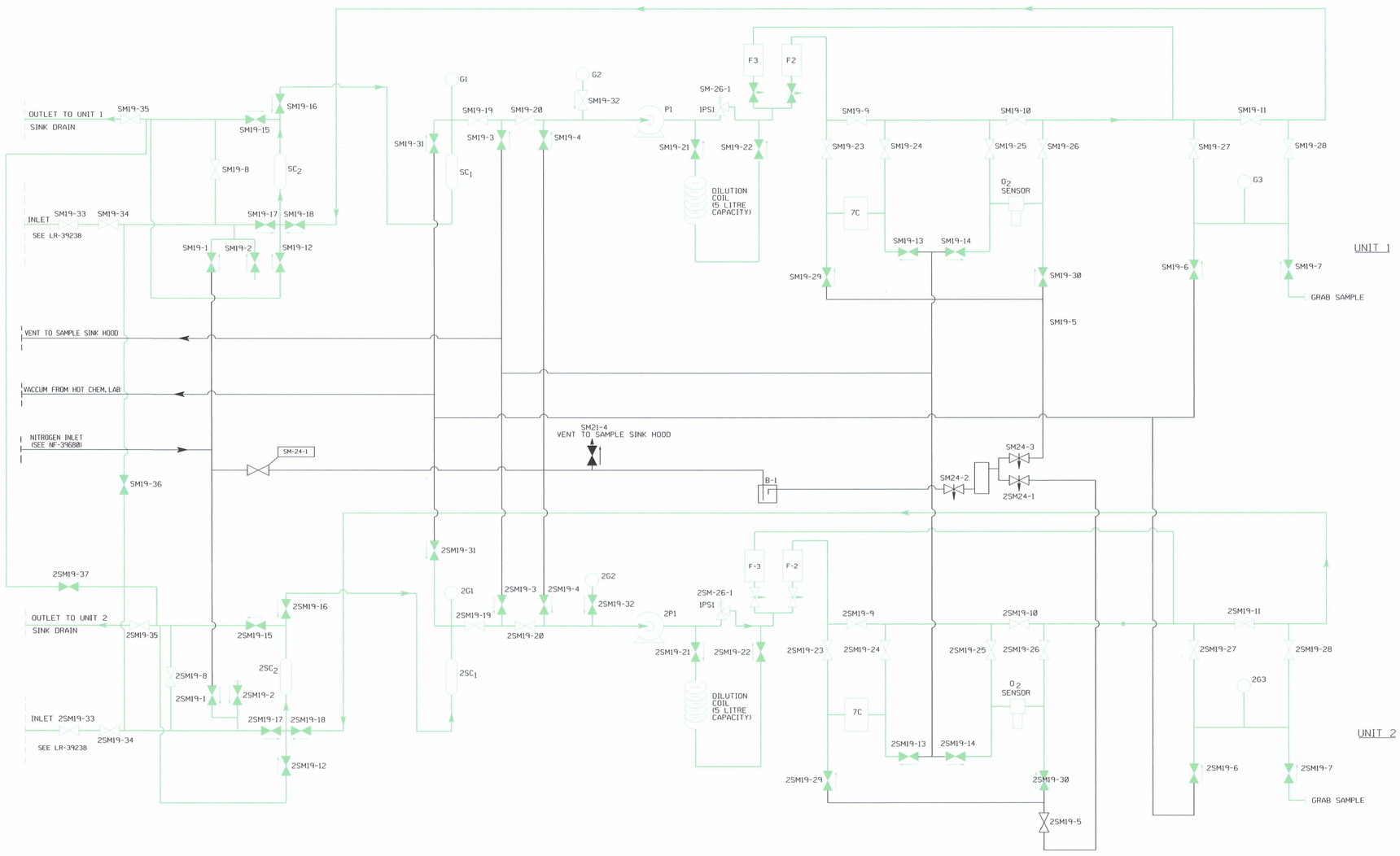

LR - LEGEND
IN SCOPE FOR LR PER 10 CFR 54.4(a)(1) 10 CFR 54.4(a)(3)
IN SCOPE FOR LR PER 10 CFR 54.4(a)(2)
OUT OF SCOPE
DENOTES SYSTEM BOUNDARY BREAK

LEGEND

SC1 -150CC SAMPLE CYLINDER F1 AND F2-0-140 CC/MIN.FLOW METER
SC2-75CC SAMPLE CYLINDER F3-0-30 SCFH FLOW METER
G1, 2, & 3-PRESSURE/VACCUM GAUGE
P1-PUMP

LR - SYSTEM

SM - PLANT SAMPLE SYSTEM

REFERENCE DWG. NF-39238-2 REV. C

This map /document is a tool to assist employees in the performance of their jobs. Your personal safety is provided for by using safety practices, procedures and equipment as described in safety training programs, manuals and SPAR's.

DWN	DATE	SIGNIFICANT NO.	8630			100	4420	1	
CHECKED		GROUP	1	2	3	4	5	CL	6
PROJECT NO.									
APP'D & CERT.									
FILMED									

LICENSE RENEWAL BOUNDARY DWG
FLOW DIAGRAM
GAS SAMPLE PANEL

NORTHERN STATES POWER COMPANY
Xcel Energy
PRAIRIE ISLAND NUCLEAR GENERATING PLANT
RED WING, MINNESOTA

SCALE | REV 0

LR-39238-2

LR-39238-2.DGN NSP GENERATION CAD

D-038

LR-39238-2

...\Flows\LR-39238-2.DGN 2/23/2007 8:19:32 AM