Overview of Safety Analysis Reports

Brad Day

July 8, 2008

Presentation to the NRC

Currently Approved Governing Documents

- TRUPACT-II Safety Analysis Report (SAR) – Rev. 21
- HalfPACT SAR – Rev. 4
- Contact-Handled Transuranic Waste Authorized Methods for Payload Control (CH-TRAMPAC) – Rev. 2
  - Referenced by CoCs and SARs to define payload authorized for TRUPACT-II and HalfPACT transport
- CH-TRU Payload Appendices – Rev. 1
  - Referenced by CH-TRAMPAC for supporting documentation for limits and compliance methods
  - Referenced by the SARs for supplemental design basis evaluations for payload containers serving a safety function in the package

Chapter 1 – General Information

- TRUPACT-II & HalfPACT
  - Two independent stainless steel shell and torispherical head leaktight containment boundaries utilizing a lock ring closure mechanism and tapered bore O-ring seals
    - Externally protected by a rigid urethane foam, ceramic fiber insulation, and stainless steel outer shell and heads
    - Internally protected by upper and lower honeycomb spacer assemblies
  - Type B(U)F designed for truck transport and suitable for rail transport
    - Up to 3 per transport trailer and up to 7 per rail car

Package Assemblies

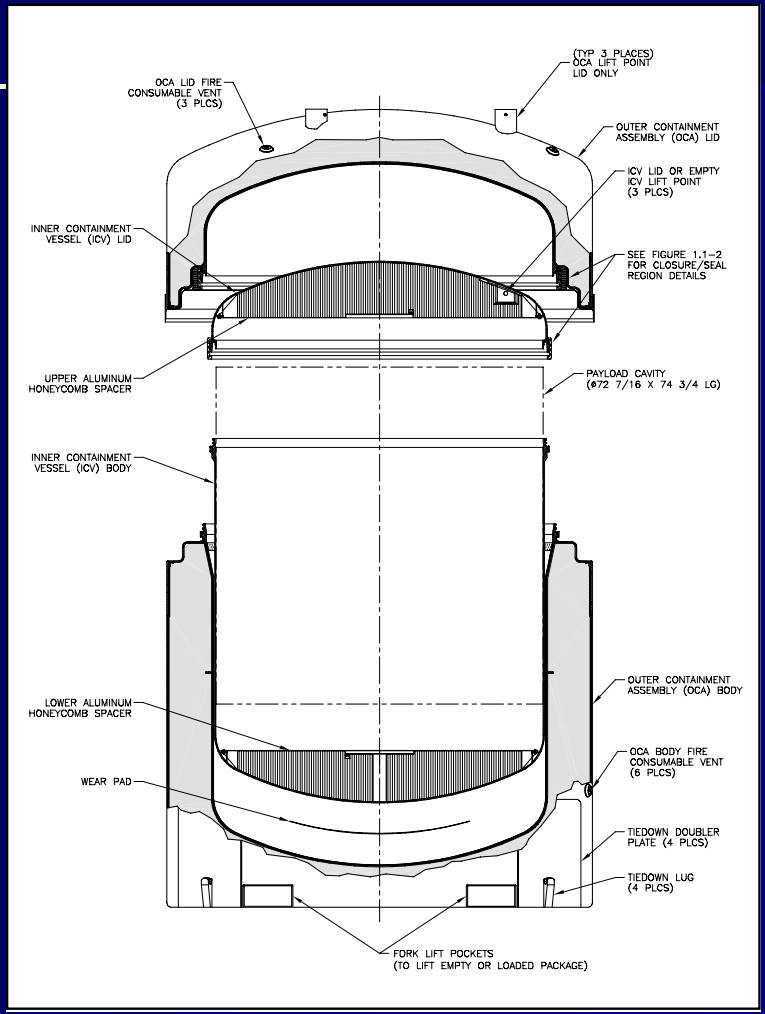

TRUPACT-II

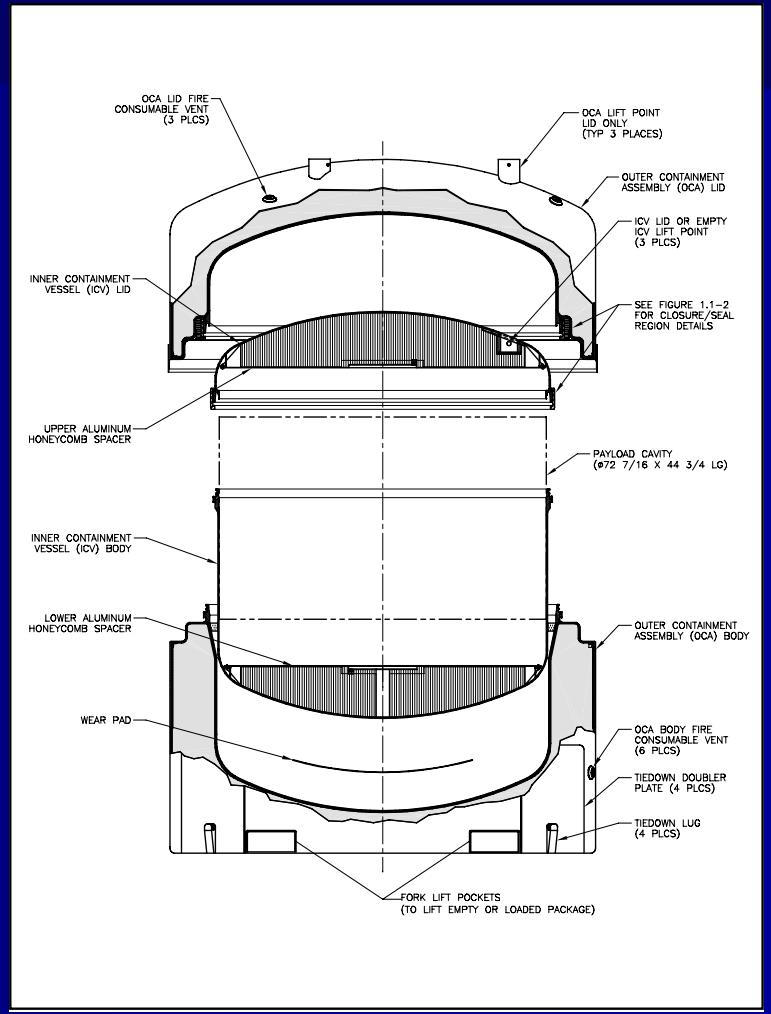

HalfPACT

Design Differences

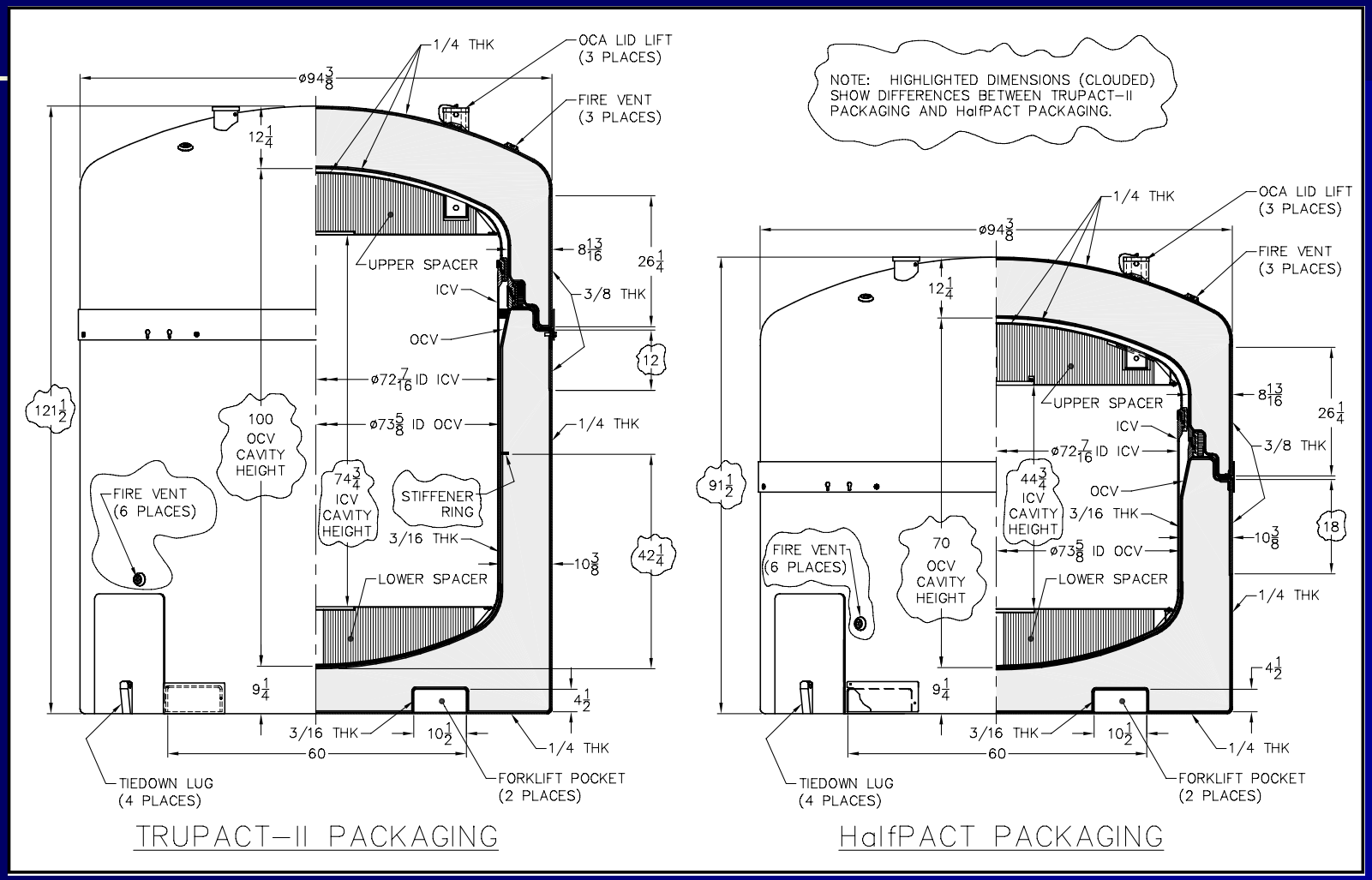

Closure Details

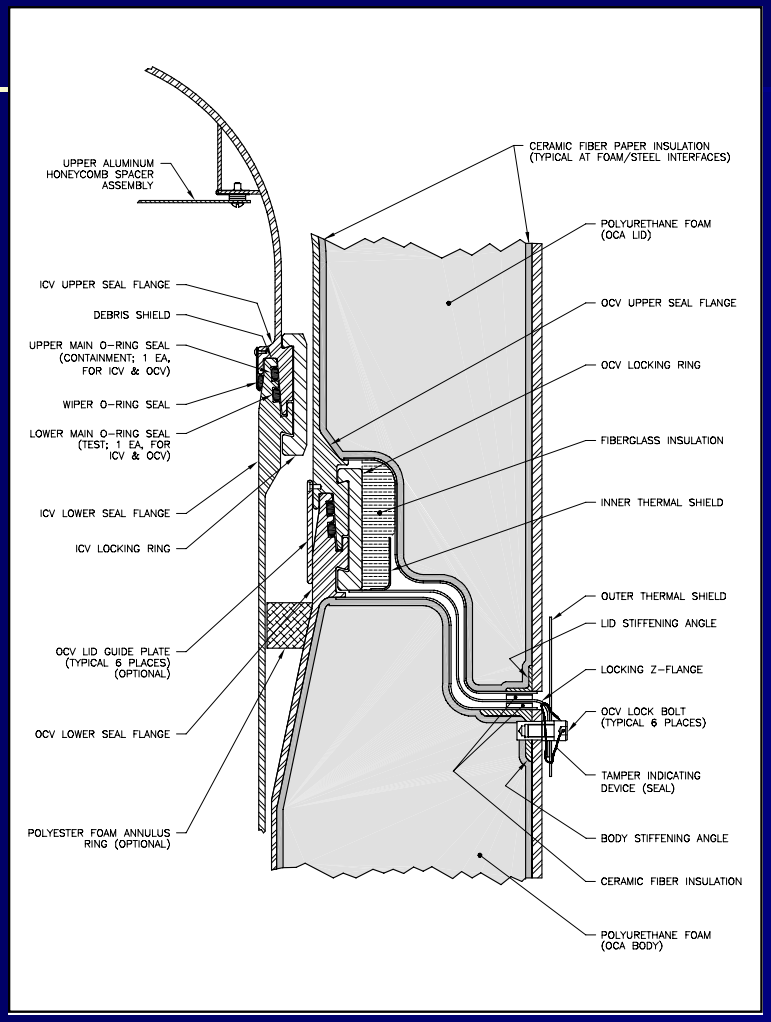

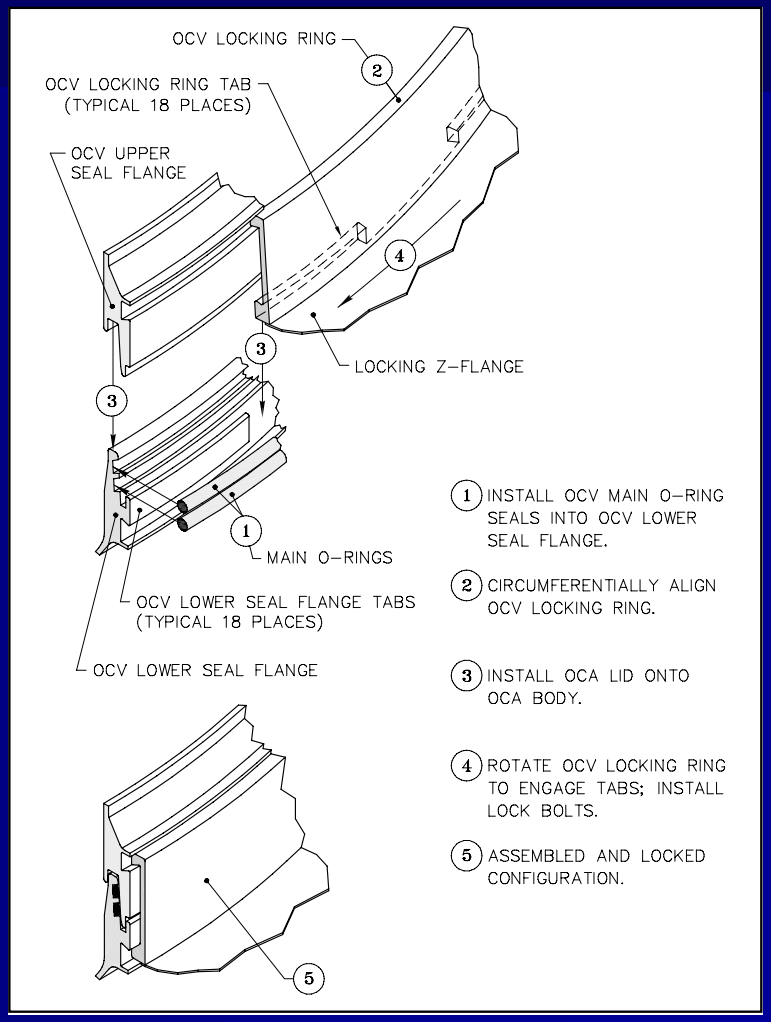

Chapter 2 – Structural Evaluation

- Normal Conditions of Transport
  - All evaluations performed analytically with exception of the 1-ft drop tests
- Hypothetical Accident Conditions
  - All evaluations performed by physical testing of engineering test units (ETUs) and certification test units (CTUs) with exception of buckling evaluations

TRUPACT-II Test Summary

- CTU-1 was subjected to ten tests
  - one NCT 3-foot free drop, three HAC 30-foot free drops, five HAC 40 inch puncture drops, and one HAC 30-minute fire
- CTU-2 was subjected to nine separate tests and one repeat test
  - three HAC 30-foot free drops, six HAC 40 inch puncture drops (one being a repeat test for CTU-1), and one HAC 30-minute fire
- CTU-3, using the same ICV and OCV as CTU-2 but modified to prevent debris encroachment into the ICV seals, was subjected to eight repeat tests for CTU-2
  - three HAC 30-foot free drops and five HAC 40 inch puncture drops; the HAC 30-minute fire test was not repeated

TRUPACT-II Test Video

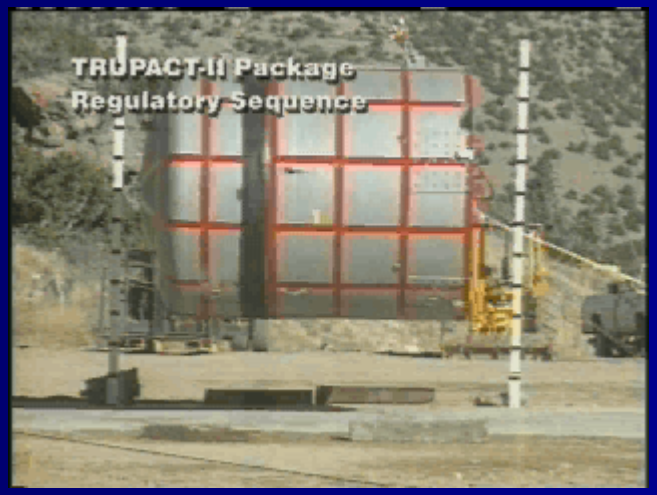

TRUPACT-II
CTU-1 Test Results

Test No.	Test Description	Test Unit Angular Orientation		Pressure (psig)		CTU Temperature	Observations and Results
		Axial①	Circumferential②	ICV	OCV		
1	NCT, 3-foot side drop onto OCV vent port	0°	110°	50	50	Ambient	18" wide flat at top (OCA lid) × 18" wide flat at bottom (OCA body) × ~7/8" deep
2	HAC, 30-foot side drop onto OCV vent port	0°	110°	50	0	Ambient	37" wide flat at top (OCA lid) × 35" wide flat at bottom (OCA body) × ~3⅝" deep
3	HAC, 30-foot CG onto OCA lid knuckle near OCA lid lift pocket	-47°	-100°	50	50	Ambient	30" wide × 53" long flat at top (OCA lid) × ~3¾" deep
4	HAC, 30-foot top drop	-90°	N/A	50	50	Ambient	53" diameter flat at top (OCA lid) × ~3⅞" deep
5	HAC, puncture drop on OCA vent port fitting	-15°	110°	50	50	Ambient	16" long tear at shell-to-angle interface on OCA body at vent port × ~3" deep
6	HAC, puncture drop onto OCA body below 1/4-to-3/8 shell weld	-3°	110°	50	50	Ambient	~3/4" deep dent
7	HAC, puncture drop 40 inches above package bottom	28°	110°	50	0	Ambient	8" wide × 11" long × ~8½" deep hole through OCA outer shell; CTU-1 may have hit ground; repeated as CTU-2, Test No. R
8	HAC, puncture drop onto damaged OCA lid knuckle	-54°	110°	50	0	Ambient	Some additional denting; no penetration
9	HAC, puncture drop on OCA seal test port fitting	-24°	20°	50	50	Ambient	~3" deep dent; ~7" wide tear of outer thermal shield
10	HAC, fire test	0°	145°	50	50	At HAC pre-fire temperature	~32 minute fire; maximum 170 °F and 260 °F ICV and OCV seal flange temperature, and maximum 1.9 psig and 1.4 psig ICV and OCV pressure rise, respectively

TRUPACT-II
CTU-2 Test Results

Test No.	Test Description	Test Unit Angular Orientation		Pressure (psig)		CTU Temperature	Observations and Results
		Axial①	Circumferential②	ICV	OCV		
1	HAC, 30-foot top slapdown drop; initial impact on OCA lid knuckle	-20°	-5°	33	0	-20 °F	45" wide flat at top (OCA lid) × 21" wide flat at bottom (OCA body)
2	HAC, 30-foot bottom drop	90°	N/A	33	33	-20 °F	negligible visible damage
3	HAC, 30-foot slapdown drop; initial impact on tie-down lug	18°	143°	50	50	Ambient	15" wide flat at top (OCA lid) × 45" wide flat at bottom (OCA body)
R	HAC, puncture drop 40 inches above package bottom	23°	143°	50	0	Ambient	10" wide × 11" long hole; ~9" deep hole; minor denting of OCV and ICV shells
4	HAC, puncture drop at the 1/4-to-3/8 lid shell interface	-42°	143°	50	50	Ambient	8" wide × 10" long hole; ~7" deep hole
5	HAC, puncture drop onto package bottom adjacent to forklift pocket	55°	-110°	50	0	Ambient	~5" deep dent
6	HAC, puncture drop onto outer thermal shield	-67°	-67°	0	0	Ambient	~24" long × ~1" deep dent
7	HAC, puncture drop onto OCA body at closure; 40° from OCA vent port fitting	-15°	110°	50	50	Ambient	3" long tear at shell-to-angle interface on OCA body × ~4" deep dent
8	HAC, puncture drop onto OCA lid at closure; 180° from OCA seal test port fitting	-22°	-145°	50	50	Ambient	~4" deep dent
9	HAC, fire test	0°	200°	50	50	At HAC pre-fire temperature	~31 minute fire; maximum 200 °F and 250 °F ICV and OCV seal flange temperature, and maximum 2.7 psig and 4.5 psig ICV and OCV pressure rise, respectively

TRUPACT-II
CTU-3 Test Results

Test No.	Test Description	Test Unit Angular Orientation		Pressure (psig)		CTU Temperature	Observations and Results
		Axial①	Circumferential②	ICV	OCV		
1	HAC, 30-foot top slapdown drop; initial impact on OCA lid knuckle	-20°	-5°	33	0	-20 °F	48" wide flat at top (OCA lid) × 23" wide flat at bottom (OCA body)
2	HAC, 30-foot bottom drop	90°	N/A	33	33	-20 °F	negligible visible damage
3	HAC, 30-foot slapdown drop; initial impact on tie-down lug	18°	143°	50	50	Ambient	13" wide flat at top (OCA lid) × 40" wide flat at bottom (OCA body)
4	HAC, puncture drop at the 1/4-to-3/8 lid shell interface	-42°	143°	50	50	Ambient	8" wide × 10" long hole; ~8" deep hole
5	HAC, puncture drop onto package bottom adjacent to forklift pocket	55°	-110°	50	0	Ambient	~8" deep hole
6	HAC, puncture drop onto outer thermal shield	-67°	-67°	0	0	Ambient	~2" deep dent
7	HAC, puncture drop onto OCA body at closure; 40° from OCA vent port fitting	-15°	110°	50	50	Ambient	~4" deep dent
8	HAC, puncture drop onto OCA lid at closure; 180° from OCA seal test port fitting	-22°	-145°	50	50	Ambient	~4" deep dent

HalfPACT Test Summary

- ETU was subjected to eleven tests
  - three NCT 3-foot free drops, three HAC 30-foot free drops, four HAC 40 inch puncture drops, and one HAC 30-minute fire
- CTU was subjected to seven tests
  - one NCT 3-foot free drop, two HAC 30-foot free drops with slapdown addition, three HAC 40 inch puncture drops, and one HAC 30-minute fire

HalfPACT ETU Test Results

Test No.	Test Description	Orientation		Test Temperature	Observations and Results
		θ②	ϕ③		
1	NCT 3' side drop opposite OCV vent port	0°	200°	53 °F	16"/18" flat at top/bottom; ~3/4" deep
2	HAC 30' side drop opposite OCV vent port	0°	200°	57 °F	36"/33" flat at top/bottom; ~3¼" deep
3	NCT 3' side drop on OCV vent port	0°	0°	40 °F	18"/18" flat at top/bottom; ~3/4" deep
4	HAC 30' side drop on OCV vent port	0°	0°	48 °F	34"/34" flat at top/bottom; ~3¼" deep
5	NCT 3' corner drop between tie-down lugs	43°	110°	53 °F	26" long × 5½" wide flat; ~1⅜ " deep
6	HAC 30' corner drop between tie-down lugs	43°	110°	55 °F	40" long × 12" wide flat; ~3¼" deep
7	Puncture drop below 3/8-to-1/4 inch transition	20°	200°	38 °F	10½" long × 11½" wide hole; ~8" deep
8	Puncture drop on OCV vent port	1°	0°	40 °F	~2½" deep dent
9	Puncture drop on damaged bottom corner	43°	110°	28 °F	~3" deep dent
10	Puncture drop above 3/8-to-1/4 inch transition	9°	290°	29 °F	~5½" deep dent; ~27" long weld tear
11	Fire with Test 1, 2, & 4 damage at hottest location	0°	146°	43 °F	~1,575 °F temperature; ~33 minutes

HalfPACT CTU Test Results

Test No.	Test Description	Orientation		Test Temperature	Observations and Results
		θ②	ϕ③		
1	NCT 3' side drop on OCV vent port	0°	0°	52 °F	13"/13" flat at top/bottom; ~1/2" deep
2	HAC 30' side drop on OCV vent port	0°	0°	50 °F	37"/37" flat at top/bottom; ~3¾" deep
3	HAC 30' slapdown drop on OCA lid/tie-down lug	5°	147½°	41 °F	41½" flat at top; ~4¾" deep at top
4	Puncture drop on OCV vent port	1½°	0°	42 °F	~3¾" deep dent
5	Puncture drop above 3/8-to-1/4 inch transition	16°	250°	52 °F	~4" deep dent; ~23" long weld tear
6	Puncture drop below 3/8-to-1/4 inch transition	23°	110°	52 °F	~3½" deep dent (no penetration)
7	Fire with Test 1, 2, & 4 damage at hottest location	0°	146°	43 °F	~1,485 °F temperature; ~33 minutes

Chapter 3 – Thermal Evaluation

- Normal Conditions of Transport
  - All evaluations performed analytically
    - TRUPACT-II (40 watts)
    - HalfPACT (30 watts)
  - MNOP is 50 psig
- Hypothetical Accident Conditions
  - All evaluations performed by physical testing of engineering test units (ETUs) and certification test units (CTUs)

TRUPACT-II Analysis Summary

- NCT (40 watts)
  - Fourteen 55-gallon drums with all the decay heat distributed uniformly in all fourteen drums (Case 1)
  - Fourteen 55-gallon drums with all the decay heat distributed uniformly in the top and bottom center drums (Case 2)
  - Fourteen 55-gallon drums with all the decay heat distributed uniformly within the top center drum (Case 3)
  - Two SWBs with all the decay heat distributed uniformly in the top and bottom SWB (Case 4)
  - Two SWBs with all the decay heat distributed uniformly in the top SWB (Case 5)

HalfPACT Analysis Summary

- NCT (30 watts)
  - Seven 55-gallon drums with all the decay heat distributed uniformly in all seven drums (Case 1)
  - Seven 55-gallon drums with all the decay heat distributed uniformly within the center drum (Case 2)

TRUPACT-II Analysis Results

Location	Solar Loading	Temperature (°F)			
		Case 1	Case 2	Case 3	Max Allowable
Center Drum Centerline					
• Maximum	24 hr avg	167	245	334	N/A
• Average	24 hr avg	163	240	239	N/A
Center Drum Wall					
• Maximum	24 hr avg	154	159	162	N/A
• Average	24 hr avg	150	154	153	N/A
Outer Drum Centerline					
• Maximum	24 hr avg	165	153	155	N/A
• Average	24 hr avg	162	150	149	N/A
Outer Drum Wall					
• Maximum	24 hr avg	154	157	160	N/A
• Average	24 hr avg	149	149	148	N/A
Average All Drums					
• Centerline	24 hr avg	162	163	162	N/A
• Wall	24 hr avg	149	150	149	N/A
ICV Wall					
• Maximum	24 hr avg	149	149	156	N/A
• Average	24 hr avg	146	146	145	N/A
• Minimum	24 hr avg	142	143	133	N/A
ICV Air					
• Average	24 hr avg	148	149	148	N/A
ICV Main O-ring Seal					
• Maximum	24 hr avg	146	146	150	225
OCV Wall					
• Maximum	24 hr avg	148	148	154	N/A
OCV Main O-ring Seal					
• Maximum	24 hr avg	143	143	145	225
Polyurethane Foam					
• Maximum	12 hr avg	155	155	155	N/A
OCA Outer Shell					
• Maximum	12 hr avg	155	155	155	N/A

Location	Solar Loading	Temperature (°F)		
		Case 4	Case 5	Max Allowable
SWB Centerline				
• Maximum	24 hr avg	239	328	N/A
• Average	24 hr avg	238	236	N/A
SWB Wall				
• Maximum	24 hr avg	150	154	N/A
• Average	24 hr avg	148	148	N/A
ICV Wall				
• Maximum	24 hr avg	148	153	N/A
• Average	24 hr avg	146	146	N/A
• Minimum	24 hr avg	144	138	N/A
ICV Air				
• Average	24 hr avg	148	147	N/A
ICV Main O-ring Seal				
• Maximum	24 hr avg	146	150	225
OCV Wall				
• Maximum	24 hr avg	148	152	N/A
OCV Main O-ring Seal				
• Maximum	24 hr avg	143	145	225
Polyurethane Foam				
• Maximum	12 hr avg	155	155	N/A
OCA Outer Shell				
• Maximum	12 hr avg	155	155	N/A

HalfPACT Analysis Results

Location	Solar Loading	Temperature (°F)		
		Case 1 (Uniform Heat in All Seven Drums)	Case 2 (Uniform Heat in Center Drum Only)	Maximum Allowable
Center Drum Centerline				
• Maximum	24 hr avg	183.8	340.4	N/A
• Average	24 hr avg	169.5	251.9	N/A
Center Drum Wall				
• Maximum	24 hr avg	156.9	164.4	N/A
• Average	24 hr avg	156.4	162.7	N/A
Outer Drum Centerline				
• Maximum	24 hr avg	181.4	152.9	N/A
• Average	24 hr avg	167.7	152.7	N/A
Outer Drum Wall				
• Maximum	24 hr avg	156.7	162.0	N/A
• Average	24 hr avg	153.0	152.6	N/A
Average All Drums				
• Centerline	24 hr avg	168.0	166.9	N/A
• Wall	24 hr avg	153.5	154.0	N/A
ICV Wall				
• Maximum	24 hr avg	152.8	153.8	N/A
• Average	24 hr avg	148.7	147.7	N/A
• Minimum	24 hr avg	146.3	144.9	N/A
ICV Air				
• Average	24 hr avg	151.1	150.9	N/A
ICV Main O-ring Seal				
• Maximum	24 hr avg	147.1	145.4	225
OCV Wall				
• Maximum	24 hr avg	150.1	149.6	N/A
• Average	24 hr avg	147.0	145.5	N/A
OCV Main O-ring Seal				
• Maximum	24 hr avg	145.5	143.9	225
Polyurethane Foam				
• Maximum	12 hr avg	155.0	155.0	N/A
• Average	24 hr avg	128.9	128.4	N/A
OCA Outer Shell				
• Maximum	12 hr avg	155.0	155.0	N/A

TRUPACT-II & HalfPACT MNOP Determinations

- Total gas G values used to estimate potential radiolytic gas generation for 60-day shipping period
- Pressure contributions from water vapor pressure & expansion of initial gas volume also accounted for
- MNOP compliance with design pressure limits documented for different configurations based on analysis or measurement

Chapter 4 – Containment

- Two independent levels of containment
  - Outer Containment Vessel (primary)
    - Consists of a mating stainless lid and body, the uppermost of two butyl main O-ring seals, and a brass vent port plug and mating butyl O-ring seal
  - Inner Containment Vessel (secondary)
    - Consists of a mating stainless lid and body, the uppermost of two butyl main O-ring seals, and a brass outer vent port plug and mating butyl O-ring seal
  - Leakage rate not to exceed 1×10^{-7} standard cubic centimeters per second (scc/sec), air, as defined in ANSI N14.5

Chapter 5 – Shielding Evaluation

- Dose rate compliance via two methods
  - Qualitative evaluation requiring surface dose rate of the payload container (prior to the addition of any ALARA shielding) to be less than 200 mrem/hr to satisfy NCT and HAC
    - Applies to 55-gal drum, 85-gal drum, 100-gal drum, SWB, TDOP, and Standard Pipe Overpack
  - Analytical evaluation requiring surface dose rate of the payload container to be less than a prescribed value to satisfy NCT and activity limits to satisfy HAC
    - Applies to S100, S200, and S300 pipe overpacks

Chapter 6 - Criticality

- Subcriticality maintained by application of fissile gram equivalent limit of ^{239}Pu for contents
  - Based on six analysis cases defined by the presence of special reflector materials, degree of compaction of the contents, and payload container type
    - Case A – for contents that are manually (i.e. not machine) compacted with less than or equal to 1% by weight special reflectors; applicable to drums, SWB, and TDOP; limit increased with credit for ^{240}Pu poison
    - Case B – for contents that are manually compacted with greater than 1% by weight special reflectors; applicable to drums, SWB, and TDOP
    - Case C – for contents that are machine compacted with less than or equal to 1% by weight special reflectors; applicable to drums, SWB, and TDOP
    - Case D – for contents that are machine compacted with less than or equal to 1% by weight special reflectors; applicable to overpacked puck drums with special controls

Chapter 6 – Criticality (cont.)

- Subcriticality (cont.)
  - Cases (cont.)
    - Case E – for contents that are manually (i.e. not machine) compacted with less than or equal to 1% by weight special reflectors; applicable to pipe overpacks
    - Case F – for contents that are manually compacted with greater than 1% by weight special reflectors; applicable to pipe overpacks
      - Cases E and F referenced in Chapter 6, summarized in the CH-TRU Payload Appendices, and detailed in supplemental reports

TRUPACT-II Fissile Limits

Contents	Payload Container	Fissile Limit per Payload Container (Pu-239 FGE)	Fissile Limit per Package (Pu-239 FGE)	Applicable Analysis Case
Not machine compacted with ≤ 1% by weight Be/BeO[1]	Drum	200	325	A
	Pipe Overpack	200	2,800	E
	SWB	325	325	A
	TDOP	325	325	A
Not machine compacted with > 1% by weight Be/BeO[1]	Drum	100	100	B
	Pipe Overpack	200	2,800	E[2]
	SWB	100	100	B
	TDOP	100	100	B
Machine compacted with ≤ 1% by weight Be/BeO[1]	Drum	200	250	C
	Pipe Overpack	Unauthorized	Unauthorized	N/A
	SWB	250	250	C
	TDOP	250	250	C
Machine compacted with controls[3] and ≤ 1% by weight Be/BeO[1]	Drum	200	325	D
	Pipe Overpack	Unauthorized	Unauthorized	N/A
	SWB	Unauthorized	Unauthorized	N/A
	TDOP	Unauthorized	Unauthorized	N/A
Machine compacted with > 1% by weight Be/BeO[1]	Drum	Unauthorized	Unauthorized	N/A
	Pipe Overpack	Unauthorized	Unauthorized	N/A
	SWB	Unauthorized	Unauthorized	N/A
	TDOP	Unauthorized	Unauthorized	N/A

HalfPACT Fissile Limits

Contents	Payload Container	Fissile Limit per Payload Container (Pu-239 FGE)	Fissile Limit per Package (Pu-239 FGE)	Applicable Analysis Case
Not machine compacted with ≤ 1% by weight Be/BeO[1]	Drum	200	325	A
	Pipe Overpack	200	1,400	E
	SWB	325	325	A
	-	-	-	-
Not machine compacted with > 1% by weight Be/BeO[1]	Drum	100	100	B
	Pipe Overpack	200	1,400	E[2]
	SWB	100	100	B
	-	-	-	-
Machine compacted with ≤ 1% by weight Be/BeO[1]	Drum	200	250	C
	Pipe Overpack	Unauthorized	Unauthorized	N/A
	SWB	250	250	C
	-	-	-	-
Machine compacted with controls[3] and ≤ 1% by weight Be/BeO[1]	Drum	200	325	D
	Pipe Overpack	Unauthorized	Unauthorized	N/A
	SWB	Unauthorized	Unauthorized	N/A
	-	-	-	-
Machine compacted with > 1% by weight Be/BeO[1]	Drum	Unauthorized	Unauthorized	N/A
	Pipe Overpack	Unauthorized	Unauthorized	N/A
	SWB	Unauthorized	Unauthorized	N/A
	-	-	-	-

Chapter 7 – Operating Procedures

- Defines operating requirements for loading the package, unloading the package, preparing an empty package for transport, and leakage rate testing of the package

Chapter 8 – Acceptance Tests and Maintenance

- Defines the packaging fabrication acceptance tests, tests for components (i.e., polyurethane foam), and periodic maintenance requirements and tests

Chapter 9 – Quality Assurance

- Describes the quality assurance requirements and methods of compliance applicable to the package