22 ESBWR PRA CHANGES

Contents

22 ESBWR PRA CHANGES 22-1
22.1 Accounting for ESBWR Design Changes In The PRA Process 22.1-1
22.1.1 Objective 22.1-1
22.1.2 Update Methodology 22.1-1
22.1.3 Changes Since Previous PRA Model Update 22.1-2
22.2 Initiating Events 22.2-1
22.2.1 Overview 22.2-1
22.2.2 Summary of changes 22.2-1
22.2.2.1 Interfacing Systems LOCA Modeling 22.2-1
22.2.2.2 Complete Loss of Air Systems Initiating Event 22.2-1
22.2.2.3 Small / Medium Liquid LOCA Frequency Change 22.2-1
22.2.3 Conclusion 22.2-2
22.3 Accident Sequence Analysis 22.3-1
22.3.1 Overview 22.3-1
22.3.2 Event Tree Changes 22.3-1
22.3.2.1 Event Tree Structure Changes 22.3-1
22.3.2.2 Success Criteria Changes 22.3-4
22.3.2.3 Class Categorization Changes 22.3-5
22.3.3 Results Impact 22.3-6
22.3.3.1 Evaluations of the Event Tree Structure Changes 22.3-6
22.3.3.2 Evaluations of Success Criteria Changes 22.3-8
22.3.3.3 Evaluation of Class Categorization Changes 22.3-8
22.3.4 Conclusion 22.3-9
22.4 System Analysis 22.4-1
22.4.1 Nuclear Boiler System 22.4.1-1
22.4.1.1 Overview 22.4.1-1
22.4.2 Isolation Condenser System 22.4.2-1
22.4.2.1 Overview 22.4.2-1
22.4.2.2 System Changes 22.4.2-1
22.4.2.3 PRA Results Impact 22.4.2-2
22.4.2.4 Conclusion 22.4.2-3
22.4.3 Control Rod Drive High Pressure Injection (C12) 22.4.3-1
22.4.3.1 Overview 22.4.3-1
22.4.3.2 System Changes 22.4.3-1
22.4.3.3 Results Impact 22.4.3-2
22.4.3.4 Conclusions 22.4.3-2
22.4.4 Standby-Liquid Control System 22.4.4-1
22.4.4.1 Overview 22.4.4-1
22.4.4.2 Description of Design Changes 22.4.4-1
22.4.4.3 Description of PRA Model Changes 22.4.4-1
22.4.5 Changes To Instrumentation, Logic And Control System – (C62, C63, C71, C72 And C74) 22.4.5-1

22.4.5.1 Overview 22.4.5-1
22.4.5.2 System Design and PRA Model Changes 22.4.5-1
22.4.5.3 Qualitative Evaluations of the I&C Model Changes 22.4.5-3
22.4.5.4 Sensitivity Study for the Detailed I&C Models 22.4.5-8
22.4.5.5 Conclusions 22.4.5-8
22.4.6 Gravity-Driven Cooling System 22.4.6-1
22.4.6.1 Overview 22.4.6-1
22.4.6.2 Description of Design Changes 22.4.6-1
22.4.6.3 Description of Model Changes 22.4.6-1
22.4.6.4 Conclusions 22.4.6-2
22.4.7 Fuel and Auxiliary Pool Cooling System (FAPCS) 22.4.7-1
22.4.7.1 Overview 22.4.7-1
22.4.7.2 System Design and PRA Model Changes 22.4.7-1
22.4.7.3 Overall Impact on PRA Results 22.4.7-1
22.4.7.4 Conclusion 22.4.7-2
22.4.8 Reactor Water Cleanup/Shutdown Cooling System 22.4.8-1
22.4.8.1 Overview 22.4.8-1
22.4.8.2 System Design Changes 22.4.8-1
22.4.9 Condensate & Feedwater System (CF&S), Circulating Water System (CIRC), and Turbine Component Cooling Water System (TCCW) 22.4.9-1
22.4.9.1 Overview 22.4.9-1
22.4.9.2 System Design and PRA Model Changes 22.4.9-1
22.4.9.3 Overall Impact on PRA Results 22.4.9-3
22.4.9.4 Conclusion 22.4.9-4
22.4.10 Reactor Component Cooling Water System (P21) 22.4.10-1
22.4.10.1 Overview 22.4.10-1
22.4.10.2 System Changes 22.4.10-1
22.4.10.3 Results Impact 22.4.10-1
22.4.10.4 Conclusions 22.4.10-1
22.4.11 Plant Service Water System (P41) 22.4.11-1
22.4.11.1 Overview 22.4.11-1
22.4.12 Instrument Air System and Service Air System – (IAS, SAS) (P52, P51) 22.4.12-1
22.4.12.1 Overview 22.4.12-1
22.4.12.2 Modeling Changes 22.4.12-1
22.4.12.3 PRA Insights 22.4.12-2
22.4.13 High Pressure Nitrogen Supply System (HPNSS)- (P54) 22.4.13-1
22.4.13.1 Overview 22.4.13-1
22.4.13.2 Modeling Changes 22.4.13-1
22.4.13.3 Conclusion 22.4.13-1
22.4.14 AC Electric Power System 22.4.14-1
22.4.14.1 Overview 22.4.14-1
22.4.14.2 System Design and PRA Model Changes 22.4.14-1
22.4.14.3 Overall Impact on PRA Results 22.4.14-3
22.4.14.4 Conclusion 22.4.14-4

22.4.15 Uninterruptible AC Power Supply System 22.4.15-1
22.4.15.1 Overview 22.4.15-1
22.4.15.2 System Design and PRA Model Changes 22.4.15-1
22.4.15.3 Overall Impact on PRA Results 22.4.15-3
22.4.15.4 Conclusion 22.4.15-3
22.4.16 Fire Protection System 22.4.16-1
22.4.16.1 Overview 22.4.16-1
22.4.16.2 System Design and PRA Model Changes 22.4.16-1
22.4.16.3 Overall Impact on PRA Results 22.4.16-2
22.4.16.4 Conclusions 22.4.16-3
22.4.17 Direct Current Power Supply System 22.4.17-1
22.4.17.1 Overview 22.4.17-1
22.4.18 Containment System 22.4.18-1
22.4.18.1 Overview 22.4.18-1
22.4.18.2 System Changes 22.4.18-1
22.4.18.3 Results Impact 22.4.18-4
22.4.18.4 Conclusion 22.4.18-5
22.4.19 Passive Containment Cooling System 22.4.19-1
22.4.19.1 Overview 22.4.19-1
22.4.19.2 Description Of Changes 22.4.19-1
22.4.19.3 Evaluation of Changes 22.4.19-1
22.4.20 References 22.4.20-1
22.5 Data Analysis 22.5-1
22.5.1 Type Code Addition 22.5-1
22.5.2 Common Cause Contribution to PRA Results 22.5-1
22.5.3 Conclusion 22.5-1
22.6 Human Reliability Analysis 22.6-1
22.6.1 Overview 22.6-1
22.6.2 Conclusion 22.6-1
22.7 Core Damage Frequency Quantification 22.7-1
22.7.1 Significant Design and Modeling Changes 22.7-1
22.7.2 Results Impact 22.7-1
22.7.2.1 Changes in Initiating Event Contribution 22.7-2
22.7.2.2 Changes in Accident Class Contribution 22.7-2
22.7.2.3 Changes in Accident Sequences 22.7-3
22.7.2.4 Changes in Top Cutsets Contributing to CDF 22.7-4
22.7.2.5 Changes in Accident Subclasses Based on Lower Drywell Water Level 22.7-4
22.7.2.6 Revision 3 Convergence Analysis 22.7-5
22.7.3 Conclusion 22.7-5
22.8 Containment Analysis 22.8-1
22.8.1 Significant Design and Modeling Changes 22.8-1
22.8.1.1 Potential for Future Exclusion / Reduction of the CCIW Release Category 22.8-1
22.8.2 Results Impact 22.8-1
22.8.2.1 Filtered Release (FR) Change 22.8-1

22.8.2.2 Loss of Containment Heat Removal – Long-Term (OPW2) Change 22.8-2
22.8.2.3 Loss of Containment Heat Removal – Short-Term (OPW1) Change 22.8-2
22.8.2.4 Containment Overpressure Failure – Vacuum Breakers (OPVB) Change 22.8-2
22.8.2.5 Ex-Vessel Explosion (EVE) Change 22.8-2
22.8.2.6 Break Outside Containment (BOC) Change 22.8-2
22.8.2.7 Initiating Event Contribution Changes 22.8-2
22.8.3 Conclusion 22.8-3
22.9 Source Terms 22.9-1
22.9.1 Overview 22.9-1
22.9.1.1 Release Sequence Class Redistribution Evaluation 22.9-1
22.9.1.2 Core Inventory Evaluation 22.9-1
22.9.1.3 Long-Term Source Term Sensitivity Evaluation 22.9-1
22.9.2 Conclusions 22.9-2
22.10 Offsite Consequences 22.10-1
22.10.1 Overview 22.10-1
22.10.1.1 Long-Term Offsite Consequences Sensitivity 22.10-1
22.10.1.2 Baseline Offsite Consequence Sensitivity 22.10-1
22.10.2 Conclusions 22.10-2
22.11 Uncertainty and Sensitivity Analysis 22.11-1
22.11.1 Overview 22.11-1
22.11.2 System Importance 22.11-1
22.11.3 Focus and RTNSS Sensitivity – Level 1 and Level 2 ..... 22.11-1
22.11.4 CCIW Sensitivity 22.11-2
22.11.5 Conclusions 22.11-2
22.12 Probabilistic Fire Analysis 22.12-1
22.12.1 Overview 22.12-1
22.12.2 Significant Design and Model Changes 22.12-1
22.12.2.1 Changes in Fire Areas 22.12-1
22.12.2.2 Changes Associated with the AC Power and UPS Systems 22.12-4
22.12.2.3 Changes Associated with the Containment System 22.12-4
22.12.2.4 Changes Associated with the ICS/PCCS Cross-Connection Valves 22.12-4
22.12.3 Results Impact 22.12-5
22.12.3.1 Quantitative and Qualitative Evaluations for Fire Area Changes 22.12-5
22.12.3.2 Qualitative Evaluation for the AC Power and UPS Systems Changes 22.12-9
22.12.3.3 Quantitative Evaluation for the Containment System Changes 22.12-10
22.12.3.4 Qualitative Evaluation for the ICS/PCCS Cross-Connection Valves 22.12-11
22.12.3.5 Qualitative Evaluation for Seismic/Fire Interaction Issues 22.12-11
22.12.4 Conclusion 22.12-12

22.13 Probabilistic Flood Analysis 22.13-1
22.13.1 Overview 22.13-1
22.13.2 ESBWR Design Changes 22.13-1
22.13.3 PRA Model Changes 22.13-1
22.13.4 Conclusion 22.13-1
22.14 High Wind Risk Analysis 22.14-1
22.14.1 Overview 22.14-1
22.14.2 ESBWR Design Changes 22.14-1
22.14.3 PRA Model Changes 22.14-1
22.14.4 High Wind Sensitivities 22.14-1
22.14.5 Conclusions 22.14-3
22.15 Seismic Margins Analysis 22.15-1
22.15.1 Overview 22.15-1
22.15.2 Conclusion 22.15-1
22.16 Shutdown Risk 22.16-1
22.16.1 Overview 22.16-1
22.16.2 System Design and PRA Model Changes 22.16-1
22.16.3 Results 22.16-3
22.16.4 Conclusions 22.16-4
22.17 Results Summary 22.17-1
22.17.1 Overview of Results and Insights 22.17-1
22.17.2 At-Power Internal Events 22.17-1
22.17.2.1 Significant Core Damage Sequences – At Power Internal Events 22.17-1
22.17.2.2 Significant Functions, SSCs, and Operator Actions – At-Power Internal Events 22.17-3
22.17.2.3 Large Release Sequences –At Power Internal Events 22.17-4
22.17.2.4 Significant Large Release Sequences –At Power Internal Events 22.17-4
22.17.2.5 Significant Large Release - At-Power Internal Initiating Events 22.17-4
22.17.2.6 Significant Large Release Functions, SSCs, and Operator Actions –At-Power Internal Events 22.17-5
22.17.2.7 Containment Performance – At-Power Internal Events 22.17-5
22.17.2.8 Significant Offsite Consequences – At-Power Internal Events 22.17-5
22.17.2.9 Summary of Important Results and Insights – At-Power Internal Events 22.17-5
22.17.3 At-Power External Events 22.17-6
22.17.4 Shutdown Internal Events 22.17-6
22.17.4.1 Significant Core Damage Sequences – Shutdown Internal Events 22.17-6
22.17.4.2 Initiating Events – Shutdown Internal Events 22.17-6
22.17.4.3 Results – Shutdown 22.17-6
22.17.5 Shutdown External Events 22.17-6
22.17.6 Insights from Seismic Margins Analysis 22.17-6

22.17.7 Summary of Important Results and Insights 22.17-6
22.18 PRA Insights Affecting ESBWR Design..... 22.18-1
22.18.1 Conclusion..... 22.18-1
22.19 Reliability And Maintainability 22.19-1
22.19.1 Overview 22.19-1
22.19.2 Conclusion..... 22.19-1
22.20 Regulatory Treatment of Non Safety Systems..... 22.20-1
22.21 Severe Accident Management 22.21-1
22.21.1 Significant Design Changes 22.21-1
22.21.1.1 ESBWR Containment Ultimate Pressure Capability..... 22.21-1
22.21.2 Impact..... 22.21-2
22.21.3 Conclusion..... 22.21-2

List of Tables

Table 22.2-1 Internal Events Initiator Frequencies……..…..…22.2-3
Table 22.4.2.2-1 PRA Results Impact……...22.4.2-3
Table 22.4.6-1 Gravity-Driven Cooling System – Top Event VI-TOPRUP…..22.4.6-3
Table 22.4.6-2 Gravity-Driven Cooling System – Cutsets for VI-TOPRUP….22.4.6-4
Table 22.4.12-1a IAS/SAS – System Dependencies……...22.4.12-4
Table 22.4.12-1b IAS/SAS – Transfers……22.4.12-5
Table 22.4.12-2 IAS/SAS – Common Cause Failures……..….22.4.12-6
Table 22.4.12-3 IAS/SAS – Human Error Events……..…22.4.12-8
Table 22.4.13-1a HPNSS – System Dependencies……..22.4.13-3
Table 22.4.13-1b HPNSS – Transfers……..22.4.13-4
Table 22.4.13-2 HPNSS – Common Cause Failures……..…22.4.13-5
Table 22.4.13-3 HPNSS – Human Error Events……...….22.4.13-5
Table 22.4.14-1 AC Electric Power System – Cutsets (Ancillary Diesel Generator Buses Only)…….…22.4.14-5
Table 22.4.16-1 FPS Revision 3 Cutsets……..…..22.4.16-4
Table 22.4.16-2 FPS Revision 2 Cutsets…….…...22.4.16-5
Table 22.4.18.2.2-1 CCF Modeling for Vacuum Breaker Isolation Valves……...22.4.18-3
Table 22.4.18.3-1 PRA Results Impact…….…22.4.18-4
Table 22.5-1 New Type Codes……...…22.5-2
Table 22.5-2 Top Ten CCF Events – RAW…….……..22.5-2
Table 22.5-3 CCF Events with F-V > 0.01……22.5-2
Table 22.6-1 New Type C Operator Action……...22.6-2
Table 22.6-2 New Type A Operator Action…….…..22.6-3
Table 22.7-1 Notable Changes for Level 1 PRA Model……....22.7-6
Table 22.7-2 CDF Contribution by Initiating Events…….22.7-8
Table 22.7-3 CDF Contribution by Accident Classes……..…..22.7-9
Table 22.7-4 Top 200 Cutsets Contributing to Revision 3 CDF……..22.7-10
Table 22.7-5 CDF Contribution by Accident Subclasses Based on LDW Water Level……...……..22.7-63
Table 22.8-1 Notable Changes for Level 2 PRA……..…..22.8-4
Table 22.8-2 Release Category Results…….…22.8-5
Table 22.8-3 Change in Total nTSL Release Frequency and CCFP……..22.8-5
Table 22.9-1 Release Category Sequence Class Review……...…22.9-3
Table 22.9-2 Sensitivity Study – Source Terms…….22.9-5
Table 22.10-1 Long-Term Source Term Sensitivity Study – Consequence Results (Elevated Release with Plume and Buoyant Effect)…..22.10-3
Table 22.10-2 Updated Risk Measures……..……22.10-4
Table 22.11-1 System Importance Results…….……22.11-3
Table 22.11-2 System Importance Results – RAW Rankings……...22.11-9
Table 22.11-3 System Importance Results – FV Rankings……..22.11-11
Table 22.11-4 Focus/RTNSS Sensitivity Results…….……22.11-12
Table 22.11-5 CCIW Sensitivity Results…….…22.11-13

Table 22.12-1 Sensitivity Results for Turbine Building Fire Area Changes…….22.12-13
Table 22.12-2 Sensitivity Results for Electrical Building Fire Area Changes…….22.12-14
Table 22.12-3 Shutdown Fire Sensitivity Results for SF/WT Building Changes…….22.12-15
Table 22.12-4 Sensitivity Results for VBIV Changes…….22.12-16
Table 22.16-1 System Model Change Summary……...22.16-2
Table 22.16-2 ADS Sensitivity Results…….…….22.16-4
Table 22.17-1 Results…….……22.17-7
Table 22.18-1 Risk Insights and Assumptions…...……22.18-1
Table 22.20-1 Changes to RTNSS Classification Between DCD Revisions 4 and 5…….22.20-2
Table 22.21.1.1-1 DCD Table 19C-13 Summary of ESBWR Fragility for Over-Pressurization…….22.21-2

List of Figures

Figure 22.3-1 Small LOCA ATWS Event Tree……..….22.3-10
Figure 22.3-2 Loss of Feedwater ATWS Event Tree…….….….22.3-11
Figure 22.3-3 General Transient ATWS Event Tree……....22.3-12
Figure 22.3-4 Inadvertent Opening of Relief Valve ATWS Event Tree……..22.3-13
Figure 22.3-5 Loss of Preferred Power ATWS Event Tree…….22.3-14
Figure 22.3-6 Loss of Plant Service Water ATWS Event Tree……22.3-15
Figure 22.3-7 Break Outside Containment in Feedwater Line A Event Tree……22.3-16
Figure 22.3-8 Break Outside Containment in Feedwater Line B Event Tree……22.3-17
Figure 22.3-9 Break Outside Containment in ICS Event Tree…….22.3-18
Figure 22.3-10 Break Outside Containment in Main Steamline Event Tree…..22.3-19
Figure 22.3-11 Break Outside Containment in RWCU Event Tree……...…22.3-20
Figure 22.3-12 Large Steam LOCA Event Tree……....22.3-21
Figure 22.3-13 Large Steam LOCA in Feedwater Line A Event Tree……..22.3-22
Figure 22.3-14 Large Steam LOCA in Feedwater Line B Event Tree…….…..22.3-23
Figure 22.3-15 Medium Liquid LOCA Event Tree……22.3-24
Figure 22.3-16 Reactor Vessel Rupture Event Tree……...22.3-25
Figure 22.3-17 Small Liquid LOCA Event Tree……22.3-26
Figure 22.3-18 Small Steam LOCA Event Tree……22.3-27
Figure 22.3-19 Loss of Feedwater Event Tree……...…22.3-28
Figure 22.3-20 General Transient Event Tree……22.3-29
Figure 22.3-21 Inadvertent Opening of Relief Valve Event Tree……..22.3-30
Figure 22.3-22 Loss of Preferred Power Event Tree……..22.3-31
Figure 22.3-23 Loss of Plant Service Water Event Tree……22.3-32
Figure 22.4.7-1 Suppression Pool Cooling Fault Tree Top……....22.4.7-3
Figure 22.4.9-1 Feedwater Isolation Valve Configuration…….22.4.9-5
Figure 22.4.12-1 Simplified Diagram of IAS and SAS……..22.4.12-9
Figure 22.4.13-1 Simplified Diagram of HPNSS……...22.4.13-6
Figure 22.4.14-1 Standby On Site Power Supply (Ancillary Diesel Generator Buses Only)……...…22.4.14-8
Figure 22.4.15-1 Uninterruptible AC Power (System Tops R13-11-CB And R13-NSR-CBA Only)…….22.4.15-4
Figure 22.4.16-1 Revised LPCI Simplified Diagram…….22.4.16-6
Figure 22.4.18-1 Top Gate DS-TOPVB…….22.4.18-6
Figure 22.4.18-2 Top Gate DL-TOPVB Top Logic…….22.4.18-30
Figure 22.7-1 Contribution to CDF by Initiating Events…….22.7-64
Figure 22.7-2 Contribution to CDF by Accident Classes……....22.7-65
Figure 22.7-3 Contribution to CDF by Accident Sequences……22.7-66
Figure 22.8-1 Revision 2 Initiating Event Contributions……...22.8-6
Figure 22.8-2 Revision 3 Initiating Event Contributions……...……22.8-7
Figure 22.9-1 Containment Bypass (Low Pressure) – T_nIN_BYP_R1a……..22.9-6

Figure 22.9-2 Dry Core-Concrete Interaction – T_nIN_nD_CCID_R1a...……22.9-7
Figure 22.9-3 Wet Core-Concrete Interaction (Low Pressure) – T_nIN_CCIW_R1a……..22.9-8
Figure 22.9-4 Wet Core-Concrete Interaction (High Pressure) – T_nDP_nIN_CCIW_R1a…….22.9-9
Figure 22.9-5 Vacuum Breaker Containment Overpressure (Low Pressure) – T_nIN_VB_R1a……..22.9-10
Figure 22.9-6 Vacuum Breaker Containment Overpressure (High Pressure) – T_nDP_nIN_VB_R1a……..……...22.9-11
Figure 22.9-7 Early Loss of CHR Containment Overpressure – T_nDP_nIN_nCHR_W1_R1a……...22.9-12
Figure 22.9-8 Late Loss of CHR Containment Overpressure – T_nDP_nIN_nCHR_W2_R1a……...22.9-13
Figure 22.20-1 RTNSS Functional Relationships Supporting Post Accident Monitoring and Containment Integrity……..……22.20-8
Figure 22.20-2 RTNSS Functional Relationships Supporting Post 72 Hour Cooling & Control Room Habitability……22.20-9
Figure 22.20-3 RTNSS Functional Relationships Supporting B……..…22.20-10

22. ESBWR PRA CHANGES

This section documents the changes from Revision 2 to Revision 3 of the ESBWR PRA.

22.1 ACCOUNTING FOR ESBWR DESIGN CHANGES IN THE PRA PROCESS

22.1.1 Objective

The ESBWR Design Certification PRA is being developed in parallel with plant design details. Already, significant safety benefits have been added to the ESBWR design based on PRA insights. To account for the effects of design changes on the PRA model, a PRA model update is performed so that the changes to PRA results can be quantified, evaluated, and applied to the design process. An update takes several months to perform. As such, it is a static representation of the plant that is based on the design information accumulated up to a specified point in time. The design phase is a dynamic process because additional detailed design information is still being developed in order to implement the functional design described in the Design Control Document. These design details enhance the understanding of the structures, systems, and components in the PRA model, and thus reduce uncertainties and eliminate assumptions. Continuing development of design details has a positive effect on the risk profile; however, the published PRA results do not account for up-to-date design information.

The PRA model update process accounts for this by including a "delta document," i.e., an accounting of changes to the plant design that have occurred since the last update of the PRA model. This process also provides the benefit of understanding the effects that design changes have on the currently published PRA results and insights. That is the purpose of Section 22.

The subsections are numbered to reflect each NEDO-33201 section, for example, changes to Section 2 – "Initiating Events" are captured in Subsection 22.2.

22.1.2 Update Methodology

Design changes that have occurred since the previous PRA model update have been identified and incorporated into the appropriate system fault tree models, event trees, or supporting calculations. Design changes are identified through discussions between PRA engineers and system design engineers, as well as tracking of the design changes in the engineering design change process. Each design change is either quantitatively or qualitatively addressed, depending on its relative significance. In addition, Subsections 22.7 and 22.8 contain a quantitative assessment of the cumulative impact of all design changes on the baseline internal events CDF and LRF models.

In addition to design changes, the ESBWR PRA model has been refined as more design details are developed. Refinements in documentation have also been made. For example, the method for identifying and documenting PRA assumptions has been refined. The improved documentation will provide a better platform for progressing from the ESBWR conceptual design into the detailed design phase.

Each PRA section is updated to reflect changes in design as well as other model refinements, where applicable. Those changes are then compared against the previous PRA model, and the differences are presented in this new Section 22.

22.1.3 Changes Since Previous PRA Model Update

Section 22 describes the effects of design changes on the PRA model that have been implemented since Revision 2 of NEDO-33201. Sections 1 through 21 are based on DCD Revision 3 or 4, depending on their issue date. Section 22 provides the bridge for all NEDO-33201 Sections to DCD Revision 5.

22.2 INITIATING EVENTS

22.2.1 Overview

Overall, there is no major change to the initiating event section. The initiating events analysis and quantification methodology was not changed. Minor changes were made to system descriptions and to LOCA initiators. Table 22.2-1 summarizes the Revision 3 initiating event data, including the changes discussed below.

22.2.2 Summary of changes

Initiating event frequencies are shown in Table 22.2-1. Individual changes are discussed in sections 22.2.2.1 through 22.2.2.3. The impact of each change is qualitatively addressed; Sections 22.7 and 22.8 show the initiating event contributions to core damage frequency (CDF) and non-TSL (nTSL) release frequency, respectively.

22.2.2.1 Interfacing Systems LOCA Modeling

The initiating event model has been enhanced to account for the impact of interfacing systems LOCA (ISLOCA). Section 2.3.3.4 states that the impact of ISLOCA is not modeled because the initiating event frequency is low. However the %ISLOCA initiating event is now modeled as described in Section 22.3.2.1.5. The %ISLOCA frequency is unchanged 6.42E-8/yr as shown in Table 22.2-1. With a low initiating event frequency and multiple mitigating systems still available, the impact to results is negligible.

22.2.2.2 Complete Loss of Air Systems Initiating Event

In Revision 2 for the Complete Loss of Air System special initiator (%T-IA), it was described that the Instrument Air system was backed up by the Service Air system. This configuration has since changed due to design modification to the Instrument Air and the Service Air systems. The Instrument Air compressors have been eliminated and the Service Air system has been reconfigured with four identical 100% capacity compressors. The Service Air compressors supply air for both systems in the new design; the frequency of the %T-IA initiating event has not been changed for Revision 3.

22.2.2.3 Small / Medium Liquid LOCA Frequency Change

Due to the small size of the nozzles and the way that they are routed through the shroud, SLCS LOCA has been re-categorized as a small liquid LOCA (%SL-L) instead of the previous medium liquid LOCA (%ML-L). As a result of this change, frequency has been shifted from %ML-L to %SL-L. The frequencies are shown in Table 22.2-1.

22.2.3 Conclusion

Only minor changes were made to the Initiating Event section; the risk impact is negligible as discussed above. The change in contribution of initiating events to CDF and LRF are shown in Sections 22.7 and 22.8, respectively.

No PRA results or insights documented in DCD Chapter 19 have been affected as a result of the changes to the initiating events analysis.

Table 22.2-1

Internal Events Initiator Frequencies

Initiating Event	ID	Revision 2 Frequency (events/year)	Revision 3 Frequency (events/year)	Discussion
Transients				
General Transient	%T-GEN	1.18	1.18	No Change
Transient with PCS Unavailable	%T-PCS	1.97E-1	1.97E-1	No Change
Loss of Feedwater	%T-FDW	1.17E-1	1.17E-1	No Change
IORV	%T-IORV	2.83E-2	2.83E-2	No Change
Loss of Preferred Power (LOPP)				
Plant Centered Loss of Preferred Power	%T-LOPP-PC	2.07E-3	2.07E-3	No Change
Switchyard Centered Loss of Preferred Power	%T-LOPP-SC	1.04E-2	1.04E-2	No Change
Grid Related Loss of Preferred Power	%T-LOPP-GR	1.86E-2	1.86E-2	No Change
Weather Related Loss of Preferred Power	%T-LOPP-WR	4.83E-3	4.83E-3	No Change
LOCAs Inside Containment				
Large Steam LOCA (no FDW line break)	%LL-S	3.39E-4	3.39E-4	No Change
Large Steam LOCA in FDW line	%LL-S-FDWA	5.55E-6	5.55E-6	No Change
	%LL-S-FDWB	5.55E-6	5.55E-6	No Change
Medium Liquid LOCA	%ML-L	4.06E-5	3.22E-5	Refer to IE Frequency Change discussion (22.2.2.3)
Small Steam LOCA	%SL-S	7.62E-4	7.62E-4	No Change
Small Liquid LOCA	%SL-L	3.57E-4	3.65E-4	Refer to IE Frequency Change discussion (22.2.2.3)
Vessel Rupture	%RVR	1.00E-10	1.00E-10	No Change
LOCAs Outside Containment				
Main Steam Line Break Outside Containment	%BOC-MS	6.20E-3	6.20E-3	No Change
Feedwater Line Break Outside Containment	%BOC-FDWA	1.70E-3	1.70E-3	No Change
	%BOC-FDWB	1.70E-3	1.70E-3	No Change
RWCU Line Break Outside Containment	%BOC-RWCU	3.40E-3	3.40E-3	No Change
ICS Line Break Outside Containment	%BOC-IC	1.53E-6	1.53E-6	No Change
ISLOCA	%ISLOCA	6.42E-8	6.42E-8	Modeling change (22.2.2.1)

Table 22.2-1

Internal Events Initiator Frequencies

Initiating Event	ID	Revision 2 Frequency (events/year)	Revision 3 Frequency (events/year)	Discussion
Special Initiators				
Complete Loss of PSWS	%T-SW	9.70E-4	9.70E-4	No Change
Complete Loss of Air Systems	%T-IA	1.02E-2	1.02E-2	Description change (22.2.2.2)

22.3 ACCIDENT SEQUENCE ANALYSIS

22.3.1 Overview

Event tree changes have been incorporated to enhance the accident sequence analysis. These changes can be categorized in the following three areas:

(1) Event tree structure changes,

(2) Success criteria changes, and

(3) Class category changes.

These changes refined the characteristics of some accident sequences and improved the readability of the event trees. Their overall impacts to PRA results are discussed in Subsections 22.7 and 22.8 for CDF and LRF quantifications, respectively.

22.3.2 Event Tree Changes

The Revision 3 event trees are shown in Figures 22.3-1 through 22.3-23. The changes from Revision 2 event trees are described below.

22.3.2.1 Event Tree Structure Changes

For PRA model enhancement in Revision 3, the event tree structures have been changed as discussed in the following subsections.

22.3.2.1.1 Addition of Event DS (Vacuum Breakers)

Failure of pressure suppression after failure to inhibit was added to ATWS scenarios to be consistent with the conservative assumptions. The event DS (vacuum breaker) was added in the ATWS event trees after the event XI (ADS Inhibit). This change helps differentiate core damage sequences that are assumed to lead to containment bypass (accident class cdv) from other ATWS sequences.

The following ATWS event trees have been updated:

- AT-LOCA (Small LOCA ATWS) – Added sequence AT-LOCA013a
- AT-T-FDW (Loss of Feedwater ATWS) – Added sequence AT-T-FDW016a
- AT-T-GEN (General Transient ATWS) – Added sequence AT-T-GEN-24a
- AT-T-IORV (Inadvertently Opening of Relief Valve ATWS) – Added sequence AT-T-IORV012a
- AT-T-LOPP (Loss of Preferred Power ATWS) – Added sequence AT-T-LOPP016a
- AT-T-SW (Loss of Service Water ATWS) – Added sequence AT-T-SW007a

22.3.2.1.2 Addition of Events R1 and R2 (CRD Late Injection)

Some sequences involve ICS initial success (event MW) followed by failure of long term makeup to the pools (event WM), which have been conservatively assumed to lead to core damage in the Revision 2 event trees. Because of the ICS initial success, the event for CRD injection (UD) was not checked in the Revision 2 sequences. However, CRD late injection, if available, could prevent core damage in these sequences after the failure of long term makeup to

the pools. In Revision 2 PRA models, the CRD late injection was treated as a manual recovery after the quantification processes instead of event tree changes.

For Revision 3 PRA models, an event R1 (CRD late injection) has been added in the following event trees.

- T-FDW (Loss of Feedwater) – Added sequence T-FDW003a
- T-GEN (General Transient) – Added sequence T-GEN004a
- T-LOPP (Loss of Preferred Power) – Added sequence T-LOPP003a

Similarly, an event R2 (CRD late injection ATWS) has been added in the following ATWS event trees for the sequences that involve ICS initial success followed by failure of long term makeup to the pools. The success criterion for CRD injection in ATWS was used for event R2.

- AT-T-FDW (Loss of Feedwater ATWS) – Added sequence AT-T-FDW003a
- AT-T-GEN (General Transient ATWS) – Added sequence AT-T-GEN003a
- AT-T-LOPP (Loss of Preferred Power ATWS) – Added sequence AT-T-LOPP003a

22.3.2.1.3 Addition of Event WM (Long Term IC/PCC Pool Makeup)

The PRA assumes that long term pool makeup is needed when ICS is initially successful. In Revision 2 accident sequence analysis, the following event trees have been identified to be inconsistent with this assumption. The existing event WM (long term pool makeup) has been re-evaluated in the following event trees to address long term IC makeup.

- BOC-FDWA (Break Outside Containment in Feedwater Line A) – Added sequence BOC-FDWA001a
- BOC-FDWB (Break Outside Containment in Feedwater Line B) – Added sequence BOC-FDWB001a
- SL-L (Small Liquid LOCA) – Added sequence SL-L001a

22.3.2.1.4 Deletion of Some Events

To enhance the readability of event trees, deletion of some events has been performed. The changes associated with event deletion are summarized as follows:

(1) Event WR (1/2 RWCU/SDC) has been deleted from the following event trees whose core damage sequences did not use event WR:

- LL-S-FDWB (Large Steam LOCA in Feedwater Line B)
- T-IORV (Inadvertently Open Relief Valve)
- SL-S (Small Steam LOCA)

(2) The following deletions have been performed to the small liquid LOCA (SL-L) event tree:

- Event WR (1/2 RWCU/SDC) has also been deleted from the small liquid LOCA event tree (SL-L), which resulted the removal of the success sequence SL-L053 (core ok).
- Revision 2 SL-L event tree was not modeled consistently as other event trees with respect to the GDCS success criteria, which were reflected in the VI and VE events (GDCS injection and equalization). To remove the inconsistency, event

VE has been deleted from the Revision 3 sequences after event VI failure. This change effectively removed sequences SL-L054 through SL-L066.

- Second event MW (3/4 IC) has been deleted from small liquid LOCA event tree (SL-L) whose core damage sequences did not use this second event.

(3) Node WV (containment venting) has been deleted from event tree LL-S-FDWA (Large Steam LOCA in Feedwater Line A). This deletion resulted in the following sequence changes:

- Deleted sequences LL-S-FDWA004 (core ok), LL-S-FDWA007 (core ok), and LL-S-FDWA010 (core ok)
- Sequences LL-S-FDWA005, LL-S-FDWA008, and LL-S-FDWA011 in Revision 3 take no credit for containment venting. This is consistent with the assumption in Subsection 3.3.4.10, which states that GDCS is not effective when the containment is vented or the containment has failed. External sources of injection are required to address loss of inventory when the containment is vented, or failed due to overpressure. For these LL-S-FDWA event tree sequences, fire protection system (FPS) as an external injection source is not available. Therefore, it is more appropriate to not credit containment venting.

22.3.2.1.5 Updates of Initiating Events

For more accuracy, the initiating events in the following event trees have been updated:

(1) BOC-FDWA (Break Outside Containment in Feedwater Line A) – Replaced initiator %BOC-FDWA with a gate named BOC-FDWA, which also included the ISLOCA initiating events. The FAPCS to RWCU/SDC piping interfacing system LOCA has been evaluated further, which was described in Subsection 2.3.3.4. The location of the FAPCS to RWCU/SDC piping interfacing system LOCA would generate a plant response similar to a Train A feedwater line break outside containment. Therefore, it is appropriate to include the ISLOCA initiating event in the BOC-FDWA event tree.

(2) T-FDW (Loss of Feedwater) – Replaced initiator %T-FDW with a gate named T-FDW, which included both %T-FDW and %T-IA (loss of instrument air) by assuming that the loss of instrument air would result in a loss of feedwater.

22.3.2.1.6 Other Changes in Event Tree Structure

For consistency among the event trees, the following changes have also been incorporated:

(1) The vessel rupture event tree (RVR) has been updated to explicitly address reactivity control. The Revision 2 event tree assumed that frequency of vessel rupture combined with the probability of failure of RPS was insignificant. This change resulted in a new sequence RVR-017, which was defined as a class cdv sequence.

(2) In the Break Outside Containment in Feedwater Line B (BOC-FDWB) event tree, a new sequence BOC-FDWB053a has been added to address the failure of event DS (vacuum breakers) after ADS success for conservatism.

(3) In the Small Liquid LOCA (SL-L) event tree, event VL (1/2 FAPCS) has been evaluated prior to VM (FPS after ADS) injection in sequences SL-L067 and SL-L068. This change resulted in a new sequence SL-L066a (core ok).

(4) In the Small LOCA ATWS (AT-LOCA) event tree, the event for feedwater injection (UF) has been added prior to event UD (2/2 CRD). This resulted in new sequences AT-LOCA001a (core ok), AT-LOCA001b (core ok), AT-LOCA001c (core ok), and AT-LOCA001d (cdii-a).

(5) In the Medium Liquid LOCA (ML-L) even tree, the event for firewater injection (VM) has been moved past the depressurization event (XD). This change was resulted from the thermal hydraulic runs, which indicates that for the limiting case (drain line break), pressure did not reduce significantly and the proposed design for the intermediate pressure fire-pump would not be able to inject.

22.3.2.2 Success Criteria Changes

As discussed in subsections above, some changes associated with the event tree structures were also resulted from the changes in success criteria. This subsection documents other changes associated with success criteria that did not result in structure changes directly.

22.3.2.2.1 Success Criteria Change for Suppression Pool Cooling

In the ATWS event trees except for AT-T-SW (Loss of Service Water ATWS), the branch gate name for event WS (1/2 FAPCS suppression pool cooling) has been changed from WS-TOPSPC to WS-TOPSPC-A. The corresponding FAPCS system model change has been described in Subsection 22.4.7.

(1) Success criteria of system top WS-TOPSPC in Revision 3 has been updated to include the success of equalization, which ensures that GDCS does not fail in the long term.

(2) The new system top WS-TOPSPC-A does not require success of an equalizing line, which is actually is a rename of system top WS-TOPSPC in Revision 2. Equalization is not required in ATWS because the RPV remains at high pressure and discharges to the suppression pool through the SRVs.

22.3.2.2.2 Success Criteria Change for GDCS Injection

The success criteria for GDCS injection has been refined as follows:

- For the non-vessel rupture (RVR) sequences except for the non-isolable break outside of containment (BOC) accident sequences, the GDCS injection success criteria was defined as 2 out of 8 injection lines and 1 out of 3 GDCS pools, which has been implemented in GDCS system top VI-TOPINJ. This definition is the same as previous revision.
- For the non-isolable BOC accident sequences, the GDCS injection success criteria was defined as 4 out of 8 injection lines and 3 out of 3 GDCS pools, which has been implemented in GDCS system top VI-TOPRUP. This definition is a new one, which is more conservative than previous revision.
- For the RVR sequences, the GDCS injection success criteria was defined as 8 out of 8 injection lines and 3 out of 3 GDCS pools, which has been implemented in GDCS system top VI-TOPRVR. This definition for RVR sequences is the same as previous revision except for the change in the system top name.

The GDCS system tops have been updated according to the above definition, which have been documented in Subsection 22.4.6.3.1.

The above change resulted in the following changes in event trees:

(1) Replaced event tree branch transfer for event VI (GDCS Early) from "VI-TOPINJ" to "VI-TOPRUP" in the following sequences according to the second success criterion definition:

- BOC-FDWA047
- BOC-FDWB103
- BOC-IC018
- BOC-IC062
- BOC-MS020
- BOC-MS064

(2) Replaced event tree branch transfer for event VI (GDCS Early) from "VI-TOPRUP" to "VI-TOPRVR" in sequence RVR-014 according to the third success criterion definition.

22.3.2.3 Class Categorization Changes

The accident sequence class categorization has been updated for consistency:

(1) The accident class category for the sequence AT-LOCA005 has been changed from cdi (core damage at low RPV pressure and containment intact) to cdiii (core damage at high RPV pressure with containment intact). It has been conservatively assumed that this small LOCA ATWS sequence with a success of ADS inhibit (no depressurization) would result in RPV failure at high pressure.

(2) The definition for high-pressure scenarios has been updated, which has resulted in changes in the accident class categories for several sequences. The Revision 2 definition was based on RPV pressure at the time of core damage. The new definition is based on RPV pressure just prior to vessel breach. The accident class category was changed from cdiii to cdi for the following sequences:

- AT-T-FDW013
- AT-T-GEN021
- AT-T-IORV009
- AT-T-LOPP013
- BOC-FDWB021
- SL-S018
- SL-L023
- T-GEN022
- T-IORV018
- T-IORV065
- T-SW011

(3) The accident class category for the following sequences was changed to cdv (containment bypassed at the beginning of the accident) for consistency:

- LL-S-049
- LL-S-FDWA015
- LL-S-FDWB046

- T-GEN068
- T-IORV064
- BOC-MS067
- BOC-FDWA050
- BOC-FDWB106
- BOC-RWCU052
- BOC-IC065

(4) The accident class category for the following two sequences was changed to cdv. This is an editorial change because the appropriate accident class category (cdv) has been used in the Revision 2 quantification.

- SL-L069
- SL-S064

22.3.3 Results Impact

The following subsections address the changes listed in subsection 22.3.2 by qualitative evaluations. The quantitative evaluations for the event tree changes were performed with the integrated Revision 3 models, which have been documented in Subsections 22.7 and 22.8.

22.3.3.1 Evaluations of the Event Tree Structure Changes

22.3.3.1.1 Evaluation of Addition of Event DS (Vacuum Breakers)

The addition of event DS (vacuum breakers) in the ATWS event trees described in Subsection 22.3.2.1.1 has created several new sequences. These new sequences were defined as accident class cdv due to the vacuum breaker failure. However, the CDF or LRF contributions from these new sequences are negligible because the vacuum breakers are very reliable.

As shown in Subsections 22.7 and 22.8, no notable changes in CDF and LRF were resulted from this change.

22.3.3.1.2 Evaluation of Addition of Events R1 and R2 (CRD Late Injection)

The addition of events R1 and R2 (CRD late injection) to the event trees described in Subsection 22.3.2.1.2 has created several new sequences. This was a refinement to the Revision 2 event trees. The new sequences include the additional CRD system failures on top of other system failures that lead to core damage. Because the CRD late injection has already been treated as a manual recovery after the quantification processes in Revision 2, this change resulted in negligible impact on total CDF and LRF.

As shown in Subsections 22.7 and 22.8, no notable changes in CDF and LRF were resulted from this change.

22.3.3.1.3 Evaluation of Addition of Event WM (Long Term IC/PCC Pool Makeup)

The addition of event WM (long term IC/PCC pool makeup) was a refinement to the Revision 2 event trees, which has resulted in several new sequences.

Changes in Subsection 22.3.2.1.3 were associated with the BOC-FDWA, BOC-FDWB and SL-L event trees. Because of relatively low frequencies for the BOC and small liquid LOCA initiating

events and the redundant systems that can be used for long term IC/PCC pool makeup, The CDF and LRF contributions from these new sequences are negligible.

As shown in Subsections 22.7 and 22.8, no notable changes in CDF and LRF were resulted from this change.

22.3.3.1.4 Evaluation of Deletion of Some Events

Changes in Subsection 22.3.2.1.4 are evaluated as follows:

(1) Change #1 has no impact on the PRA results because the deleted event WR (1/2 RWCU/SDC) was not used in the subject event trees.

(2) Change #2 has no impact on the PRA results. The deleted event WR (1/2 RWCU/SDC) was not used in the small liquid LOCA (SL-L) tree. The Revision 2 SL-L event tree modeled the VI (GDCS Early) and VE (GDCS Late) events inconsistently. In the deleted sequences, VE event failures did not introduce new failures because VI event has already failed. The deletion of the second event MW (3/4 IC) in SL-L event tree also has no impact because it was not used in the Revision 2 event tree.

(3) Change #3 introduced additional conservatism to the subject sequences. However, these sequences had no contributions to Revision 2 PRA results due to the multiple mitigating systems that could prevent core damage. These sequences still have negligible impact on the PRA results in Revision 3.

As shown in Subsections 22.7 and 22.8, no notable changes in CDF and LRF were resulted from the above changes.

22.3.3.1.5 Evaluation of Updates of Initiating Events

Changes in Subsection 22.3.2.1.5 are evaluated as follows:

(1) Change #1 has no impact on the PRA results because the ISLOCA contribution is negligible with the low frequency for the ISLOCA initiating event.

(2) Change #2 was an enhancement to the Revision 2 PRA model, which moved the loss of instrument air (%T-IA) contributions from T-GEN event tree to T-FDW. However, this change has negligible impact on the total risk contribution although the inclusion of %T-IA in the T-FDW event tree is slightly more conservative.

Based on the above evaluation, change #2 would result in some notable changes in the CDF and LRF contributions from affected T-GEN and T-FDW sequences.

Subsection 22.7.1 included this change as a notable PRA model change and the impact to sequence contributions was included in Subsection 22.7.2.

22.3.3.1.6 Evaluation of Other Changes in Event Tree Structure

Changes in Subsection 22.3.2.1.6 are evaluated as follows:

(1) Change #1 has negligible impact on the PRA results because the RVR initiator frequency is low (1E-10/yr) and the failure probability of reactivity control is also very low with the built-in redundancies.

(2) Change #2 has negligible impact on the PRA results because the vacuum breakers are very reliable.

(3) Change #3 has no impact because the new sequence is not a core damage sequence. Other sequences have the same failed events, which resulted in no impact to PRA results.

(4) Change #4 resulted in one new core damage sequence. This new sequence had negligible impact on the PRA results because of the multiple mitigating systems (FAPCS, RWCU/SDC, and containment venting) that could prevent core damage in this new sequence.

(5) Change #5 resulted in a more logical event sequencing, which has no impact on the PRA results because the core damage sequences in the medium liquid LOCA event trees had the same failed events.

As shown in Subsections 22.7 and 22.8, no notable changes in CDF and LRF were resulted from the above changes.

22.3.3.2 Evaluations of Success Criteria Changes

22.3.3.2.1 Evaluation of Success Criteria Change for Suppression Pool Cooling

The refinement of the success criteria of system top WS-TOPSPC and the introduction of new system top WS-TOPSPC-A for the ATWS sequences have negligible impact on the PRA results. This change refined the event trees to be consistent with the modeling assumptions because equalization is not required in ATWS. However, equalization is an automatic function with a success of any one out of four lines, which has negligible risk contributions, as discussed in Subsection 22.4.7.

As shown in Subsections 22.7 and 22.8, no notable changes in CDF and LRF were resulted from the above changes.

22.3.3.2.2 Evaluation of Success Criteria Change for GDCS Injection

The changes described in Subsection 22.3.2.2.2 were resulted from a refinement of the success criteria of GDCS system for different sequences, which only affected the BOC sequences, whose risk contributions were relatively low. Therefore, the changes have negligible impact to PRA results.

The changes to the RVR sequences have no impact because it was only a name change for the branch transfer with the Revision 2 system top model unchanged.

As shown in Subsections 22.7 and 22.8, no notable changes in CDF and LRF were resulted from the above changes.

22.3.3.3 Evaluation of Class Categorization Changes

The changes described in Subsection 22.3.2.3 are evaluated as follows:

(1) Change #1 was negligible because its contribution in Revision 2 PRA model was negligible and no other design or model change would result in significant increase to its risk contributions.

(2) Change #2 is a notable change because several ATWS and IORV sequences were among the top sequences in Revision 2 that had >1% CDF contributions. This change resulted in a different distribution among the accident class categories. However, the impact on total CDF is not significant.

(3) Change #3 resulted in negligible impact on total CDF and LRF due to their relatively low contributions.

(4) Change #4 is an editorial change, which has no impact on the PRA results.

As shown in Subsections 22.7 and 22.8, change #2 described above is a notable change, which resulted a different distribution among the accident class categories.

22.3.4 Conclusion

The Revision 3 event trees (Figures 22.3-1 through 22.3-23) have been updated for enhancement. The majority of the changes resulted in either no or negligible impact on the PRA results.

Based on the above evaluations, two notable model changes have been identified:

(1) The change associated with the accident class categories is notable. The Revision 2 definition was based on the RPV pressure at the time of core damage. The new definition has been changed to the RPV pressure just prior to vessel breach. This model enhancement was implemented because the accident class categorization is mainly used by the Level 2 model and the RPV pressure just prior to vessel breach is a more appropriate input to the Level 2 model.

(2) The change associated with the inclusion of the loss of instrument air (%T-IA) as initiating event for the T-FDW event tree is notable. This change would move some CDF and LRF contributions from T-GEN to T-FDW sequences while the impact on total CDF and LRF is negligible.

Overall, the changes resulted in a negligible impact on the core damage frequency. However, the changes in accident sequence categorization could potentially impact the Level 2 LRF results. A comprehensive evaluation incorporating all event tree, system fault tree, and data changes has been included in Subsections 22.7 and 22.8 with all the notable changes identified.

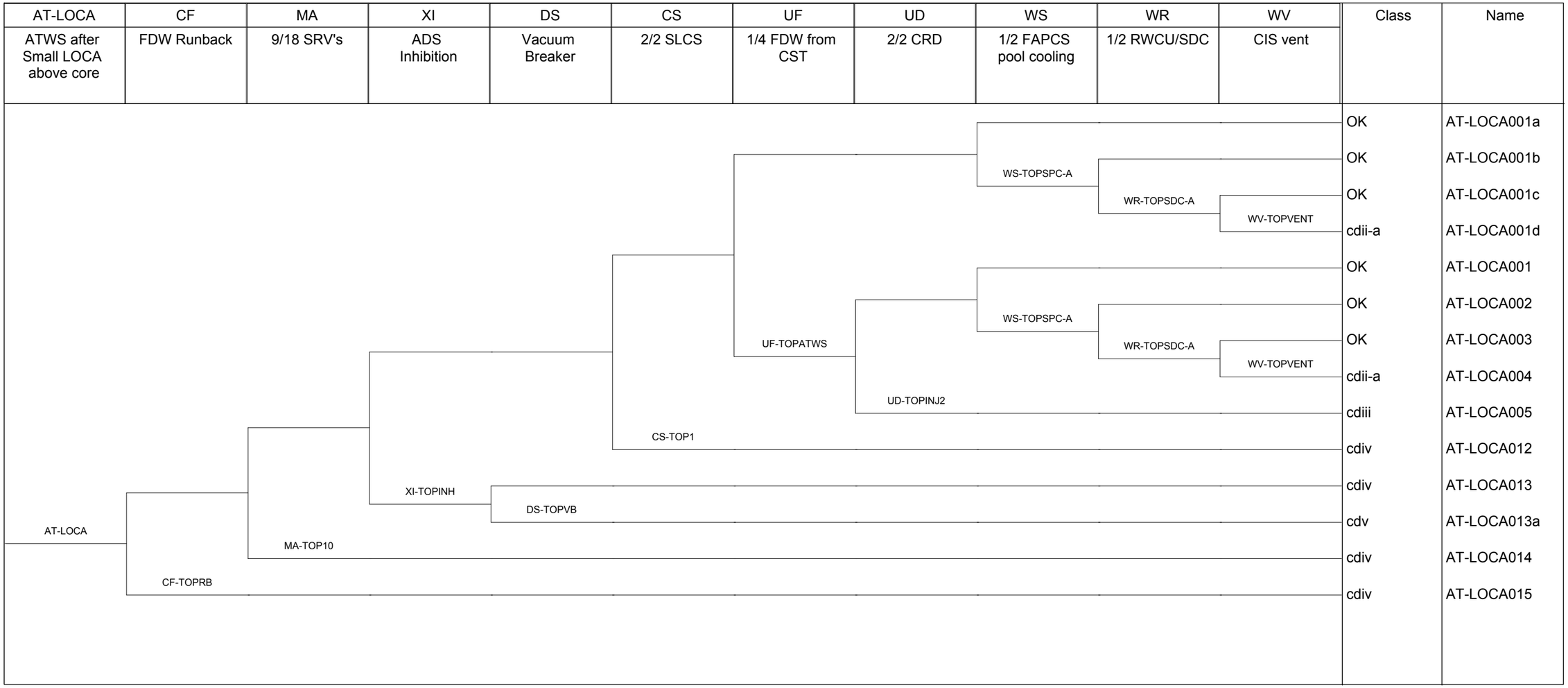

Figure 22.3-1 Small LOCA ATWS Event Tree

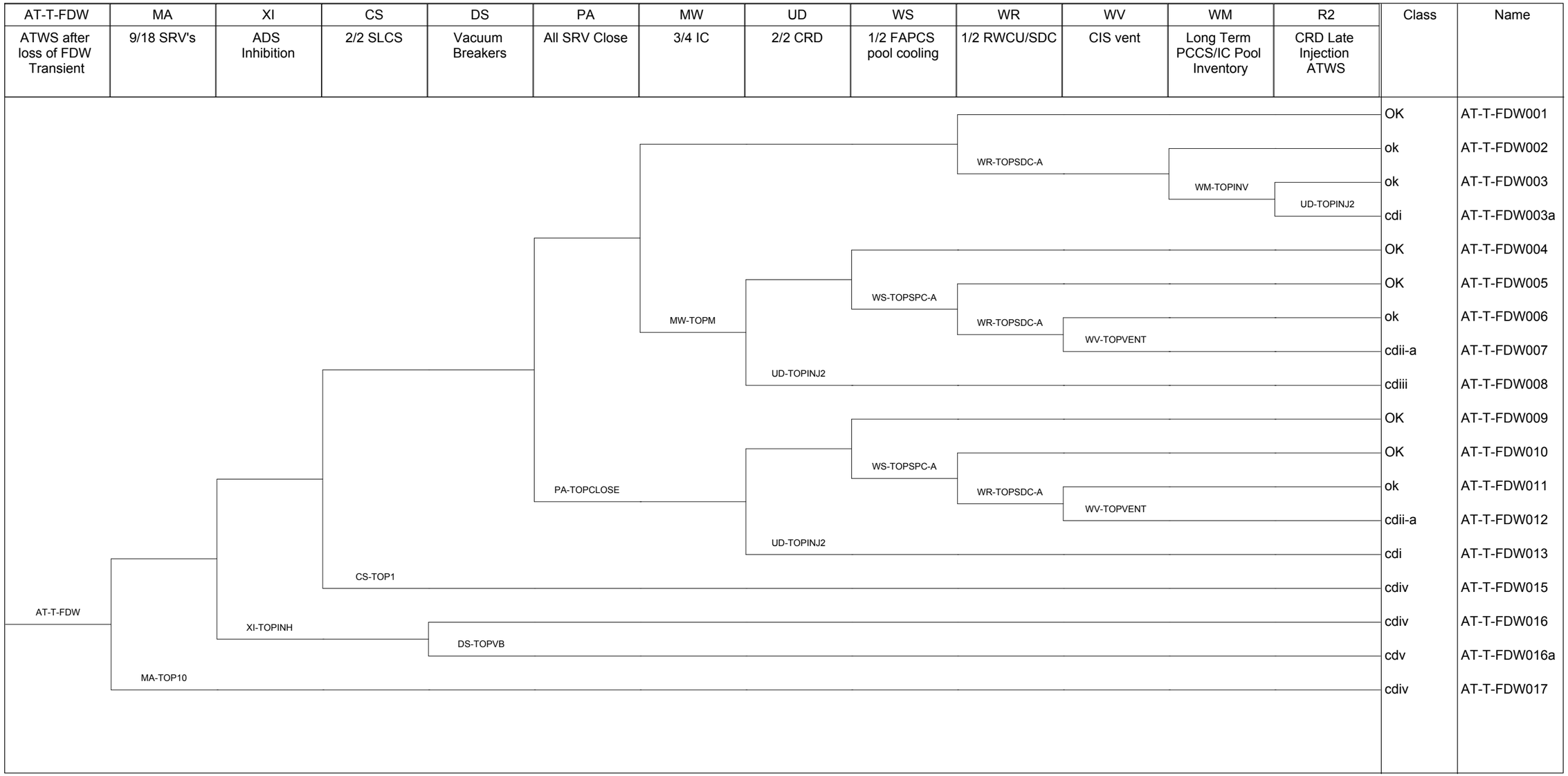

Figure 22.3-2 Loss of Feedwater ATWS Event Tree

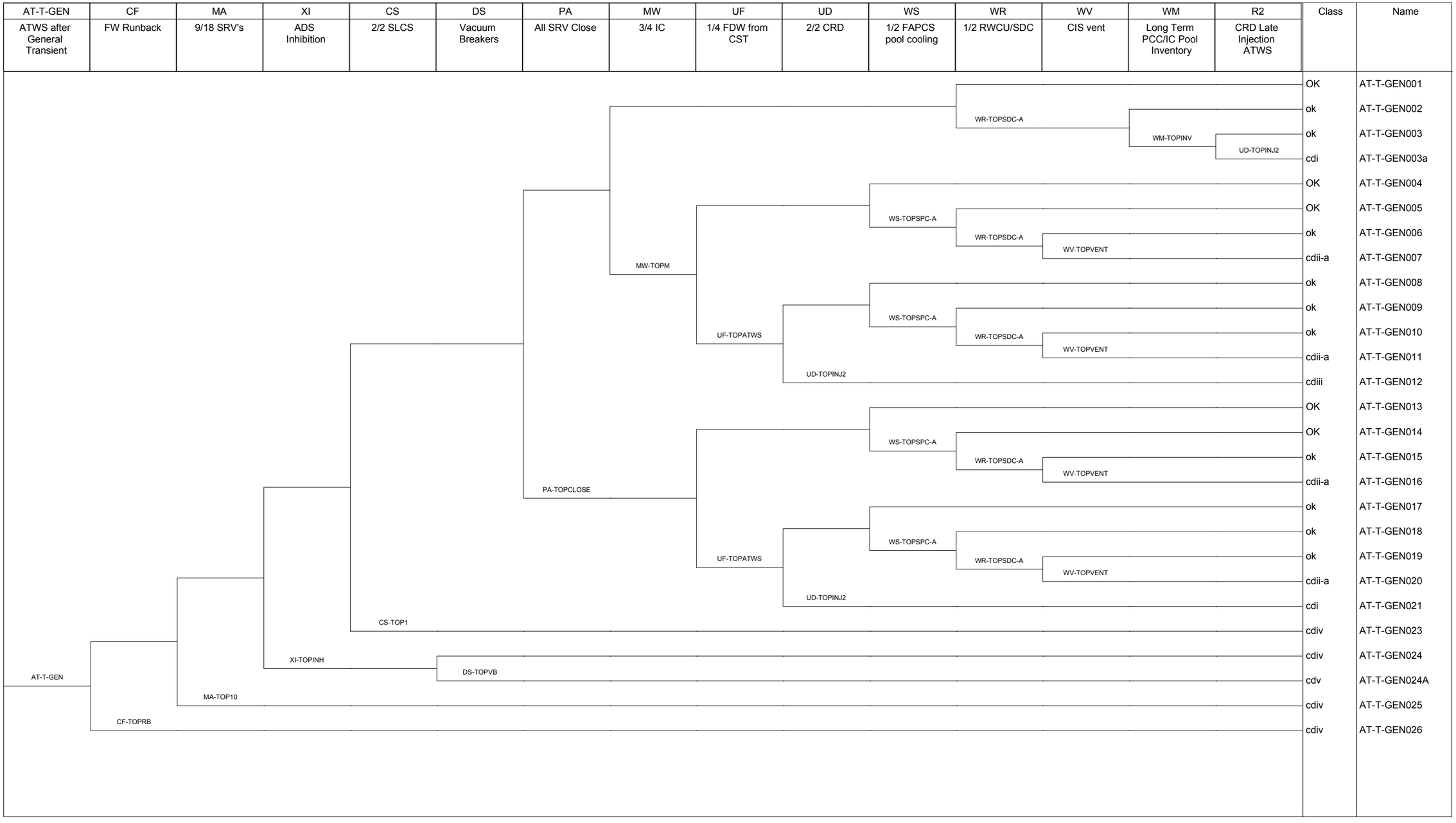

Figure 22.3-3 General Transient ATWS Event Tree

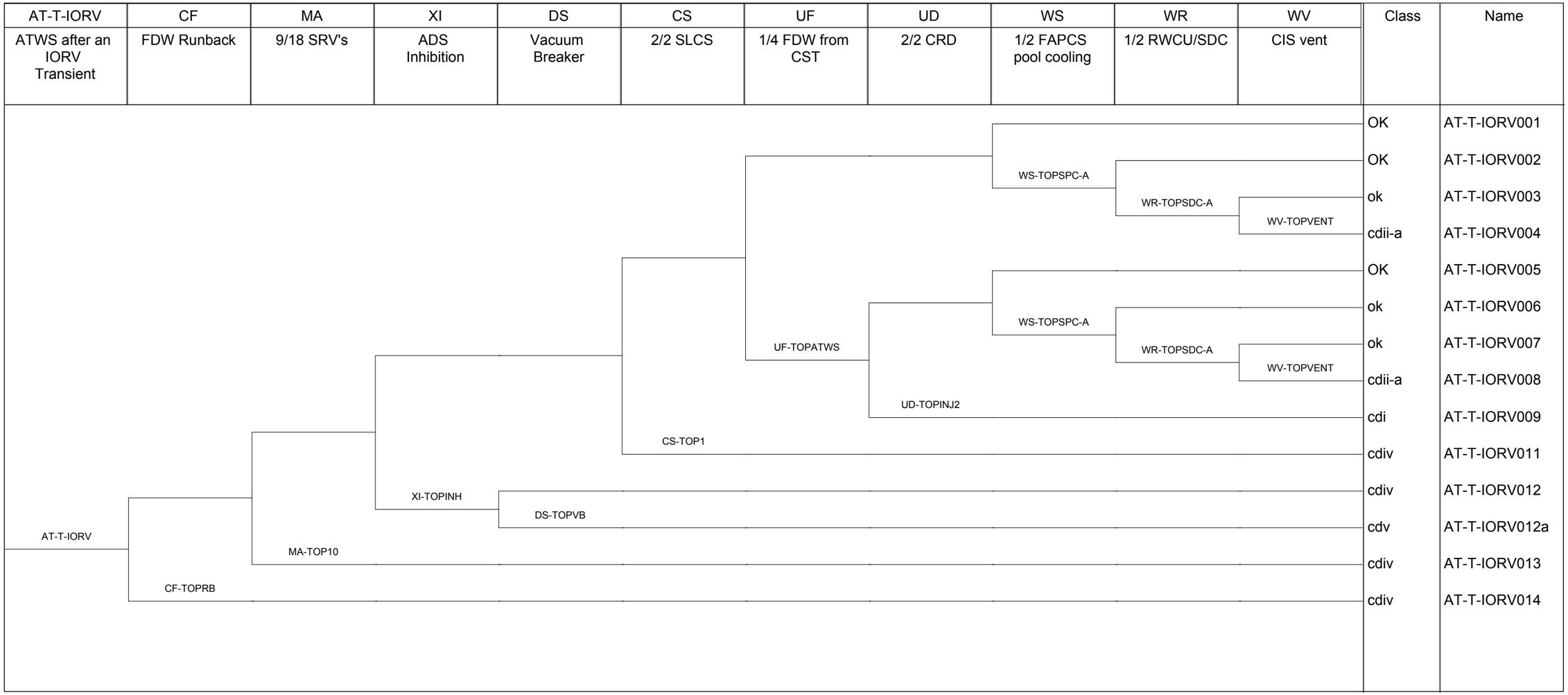

Figure 22.3-4 Inadvertent Opening of Relief Valve ATWS Event Tree

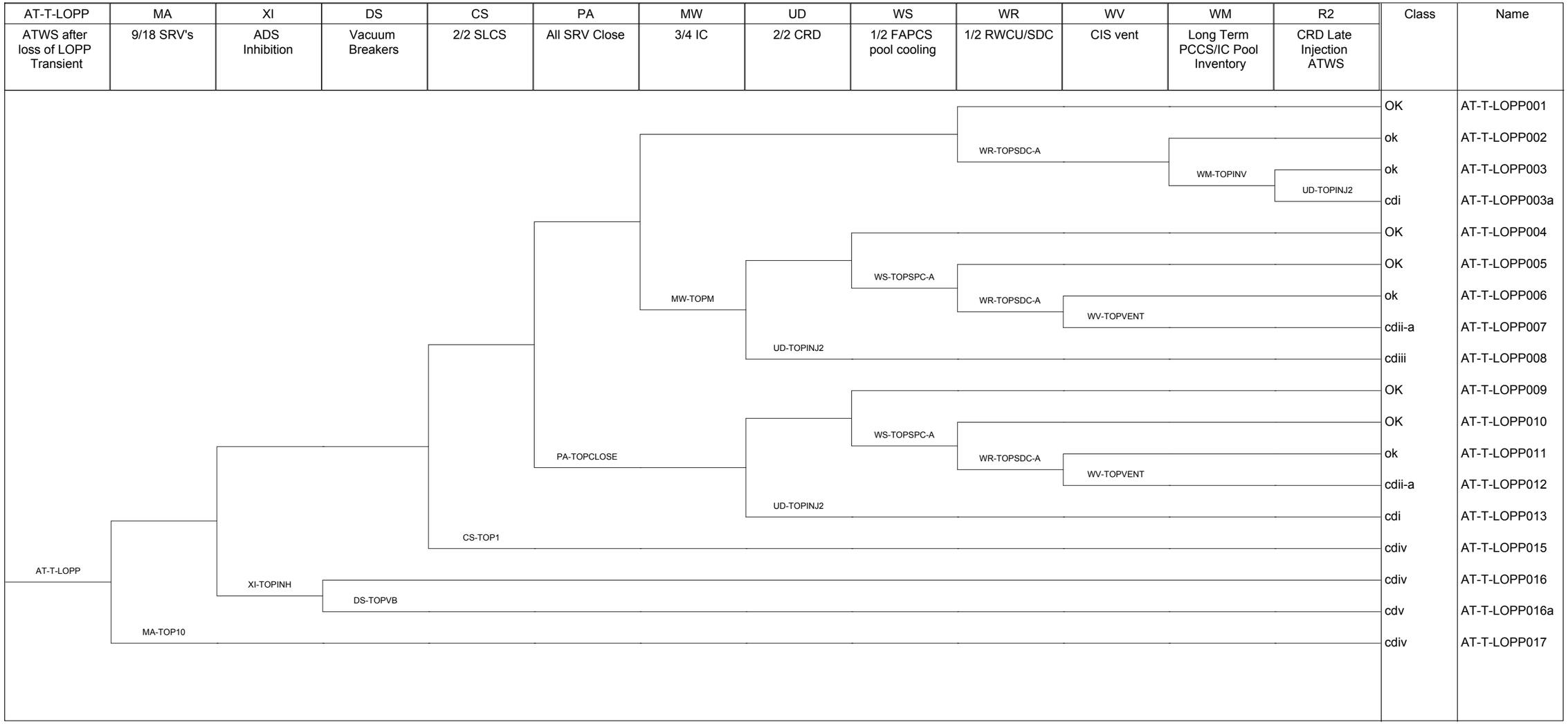

Figure 22.3-5 Loss of Preferred Power ATWS Event Tree

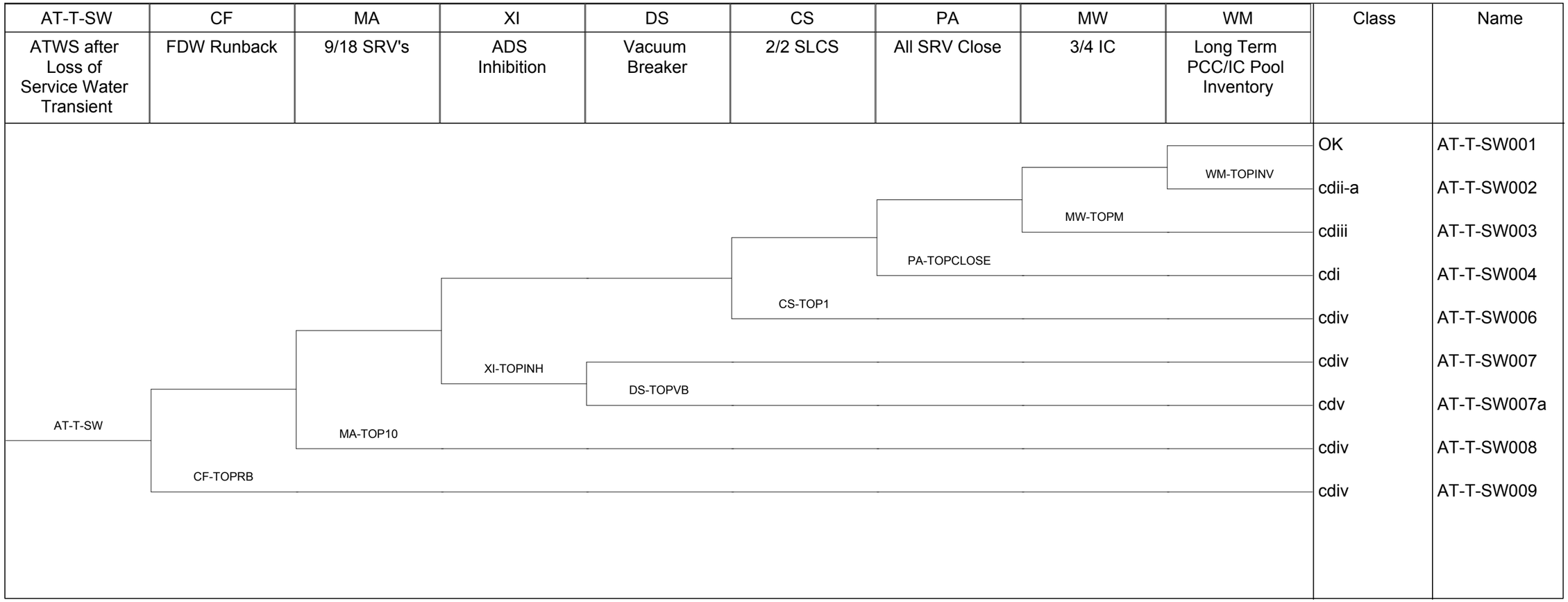

Figure 22.3-6 Loss of Plant Service Water ATWS Event Tree

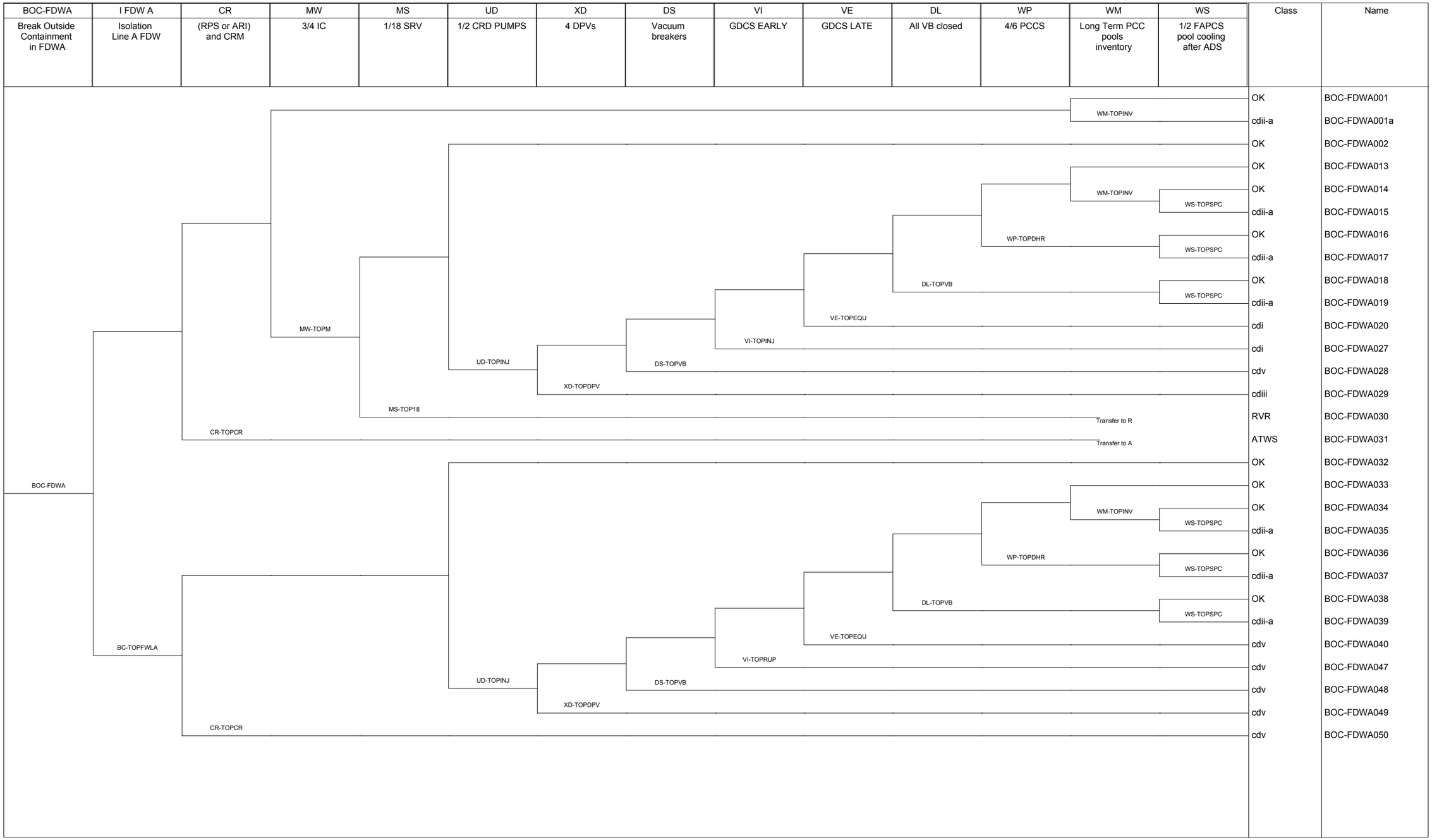

Figure 22.3-7 Break Outside Containment in Feedwater Line A Event Tree

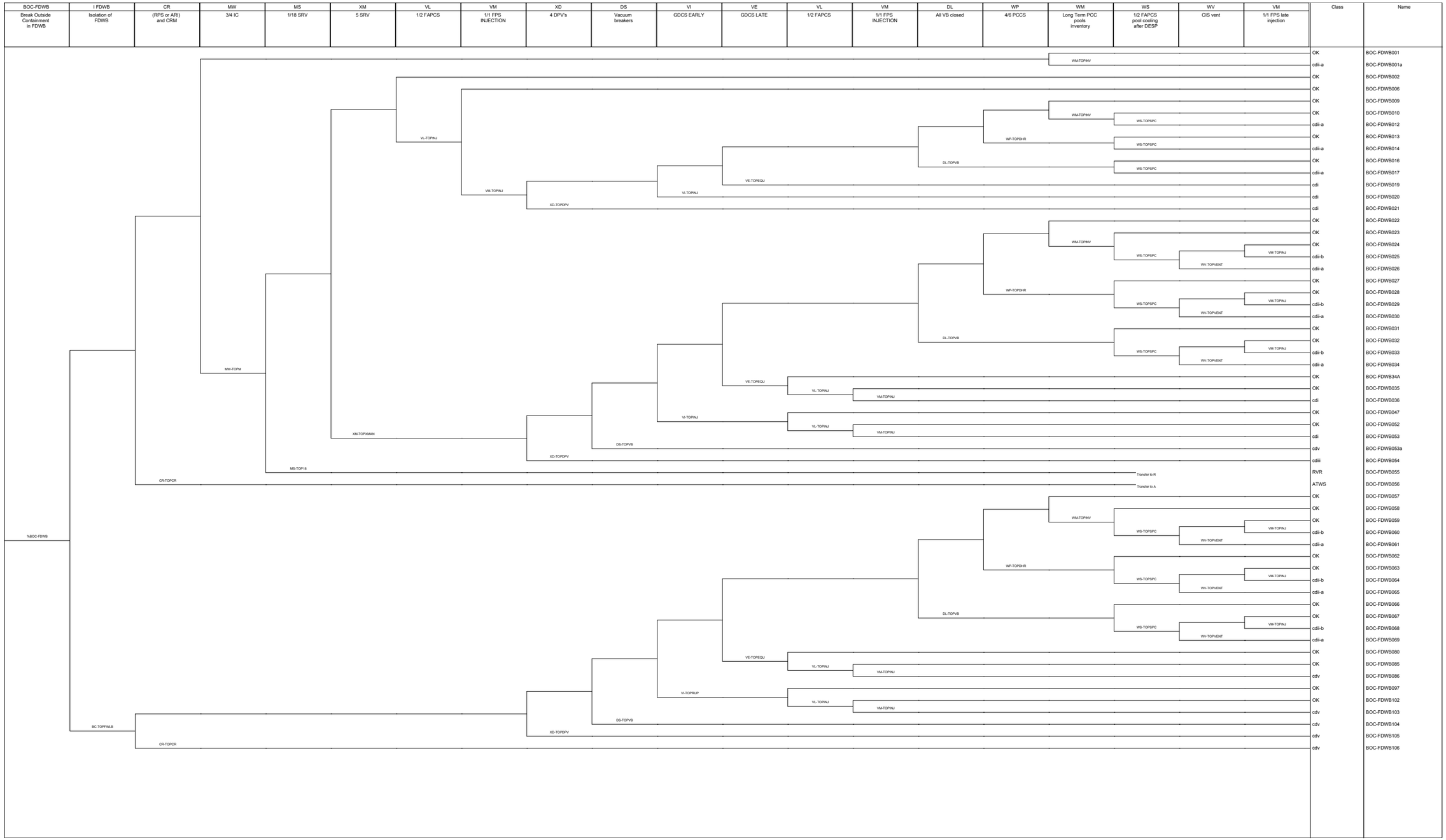

Figure 22.3-8 Break Outside Containment in Feedwater Line B Event Tree

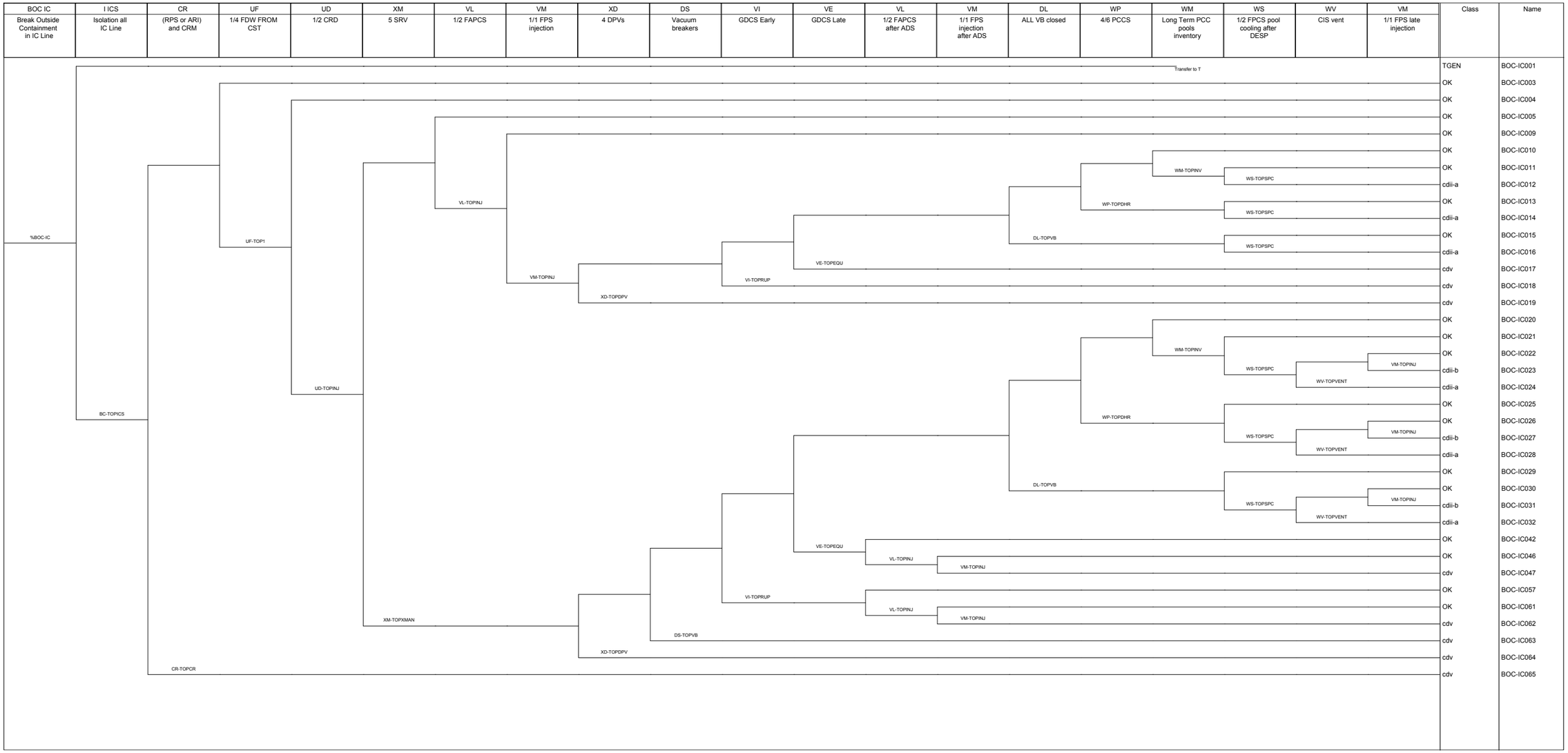

Figure 22.3-9 Break Outside Containment in ICS Event Tree

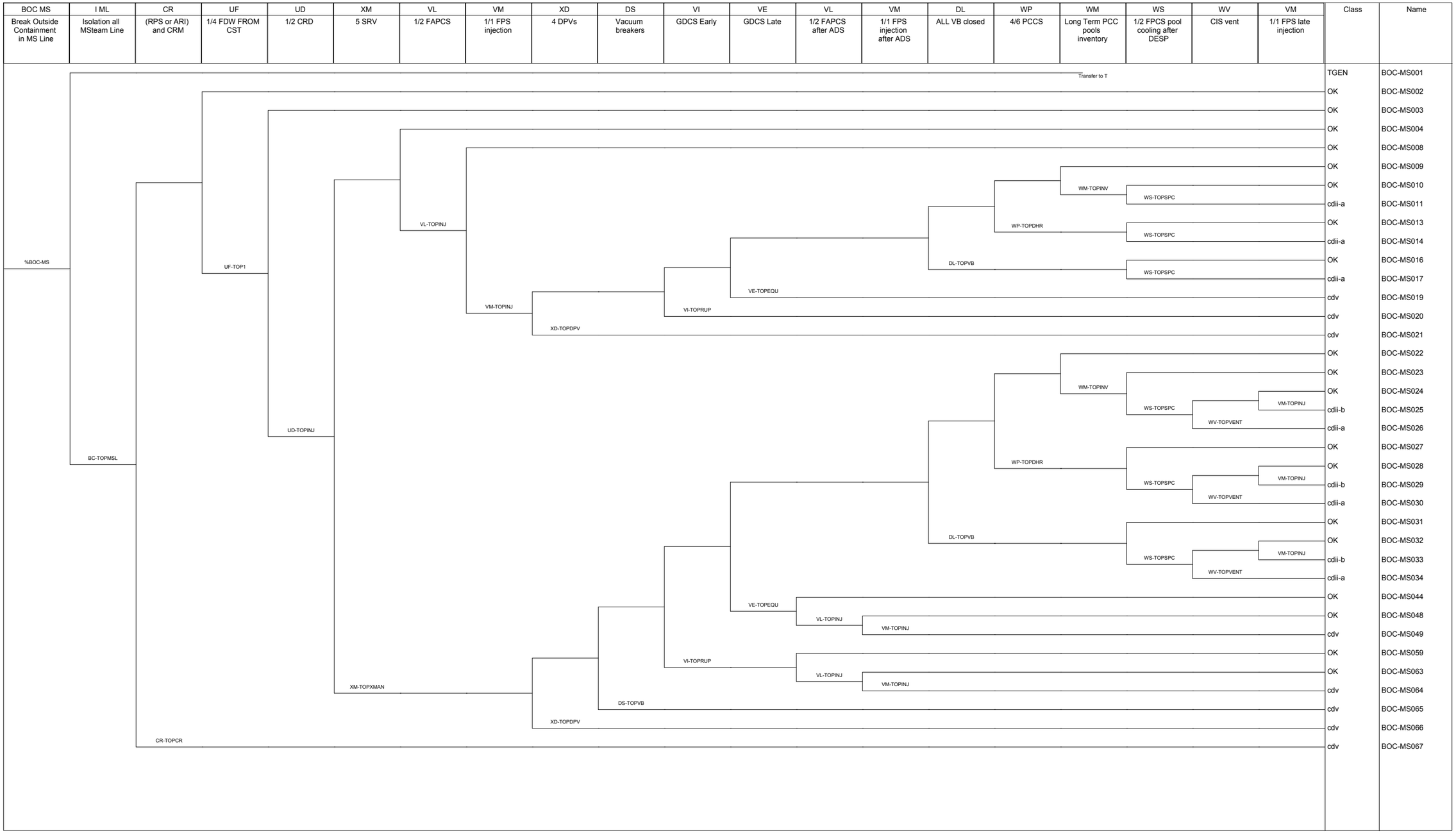

Figure 22.3-10 Break Outside Containment in Main Steamline Event Tree

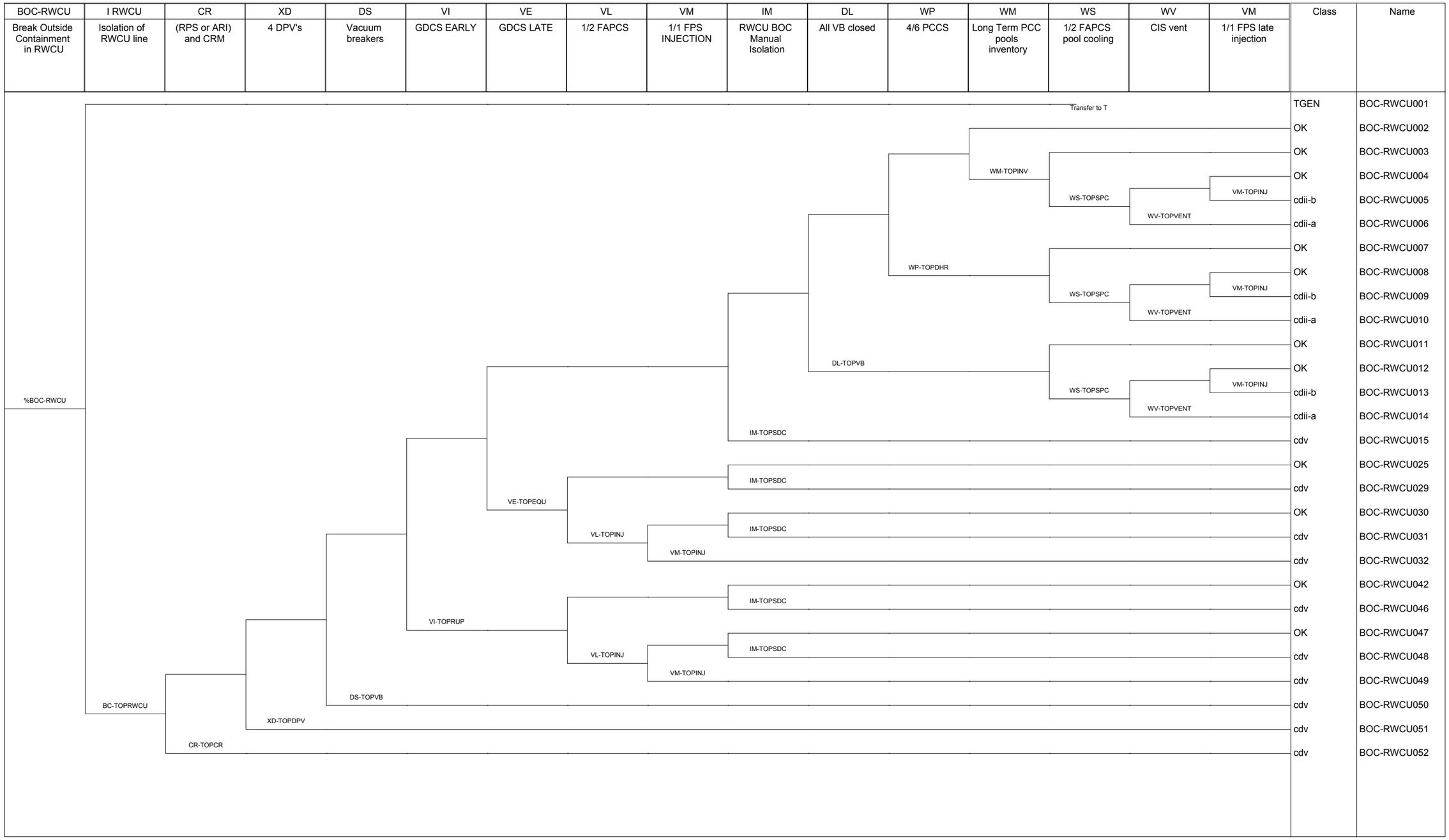

Figure 22.3-11 Break Outside Containment in RWCU Event Tree

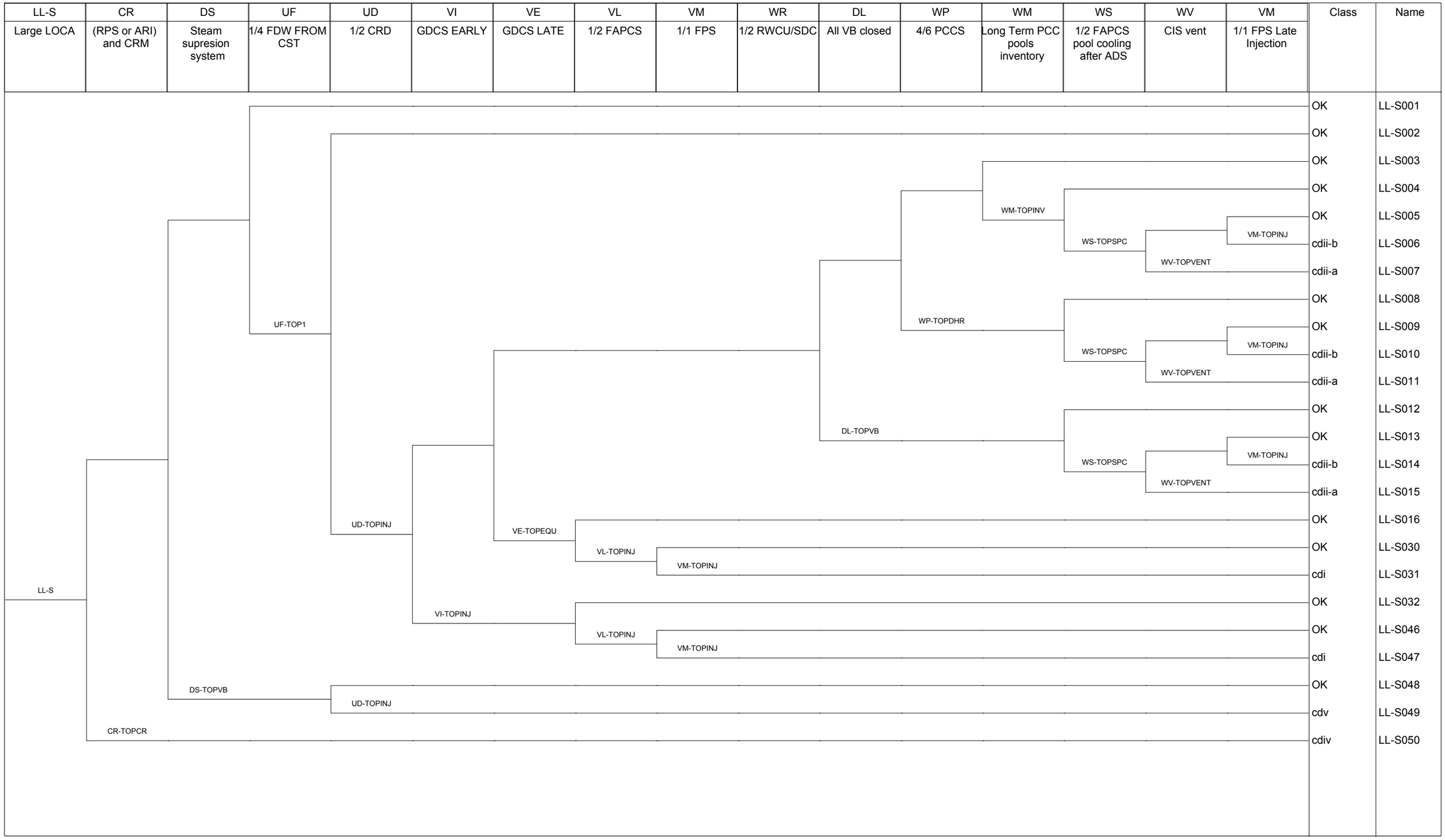

Figure 22.3-12 Large Steam LOCA Event Tree

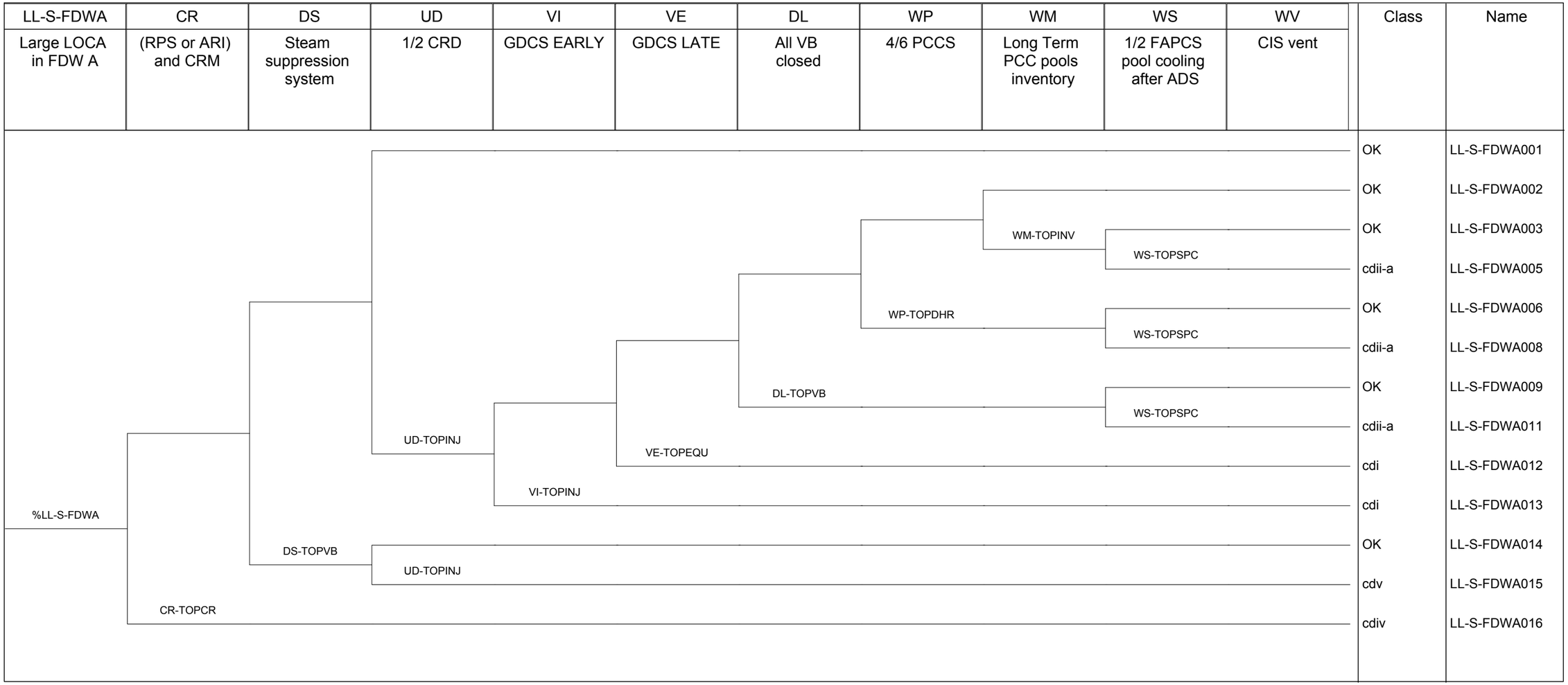

Figure 22.3-13 Large Steam LOCA in Feedwater Line A Event Tree

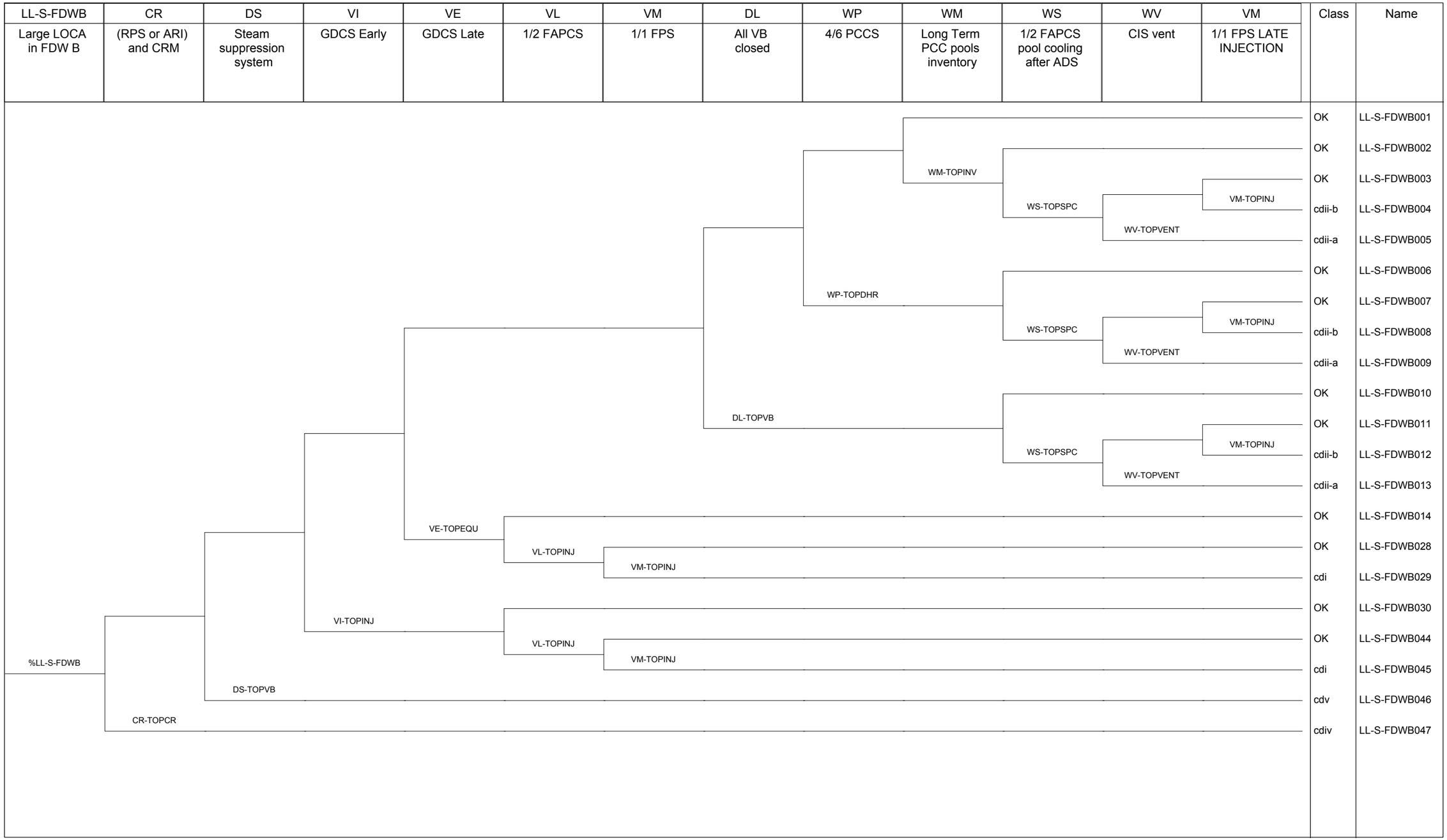

Figure 22.3-14 Large Steam LOCA in Feedwater Line B Event Tree

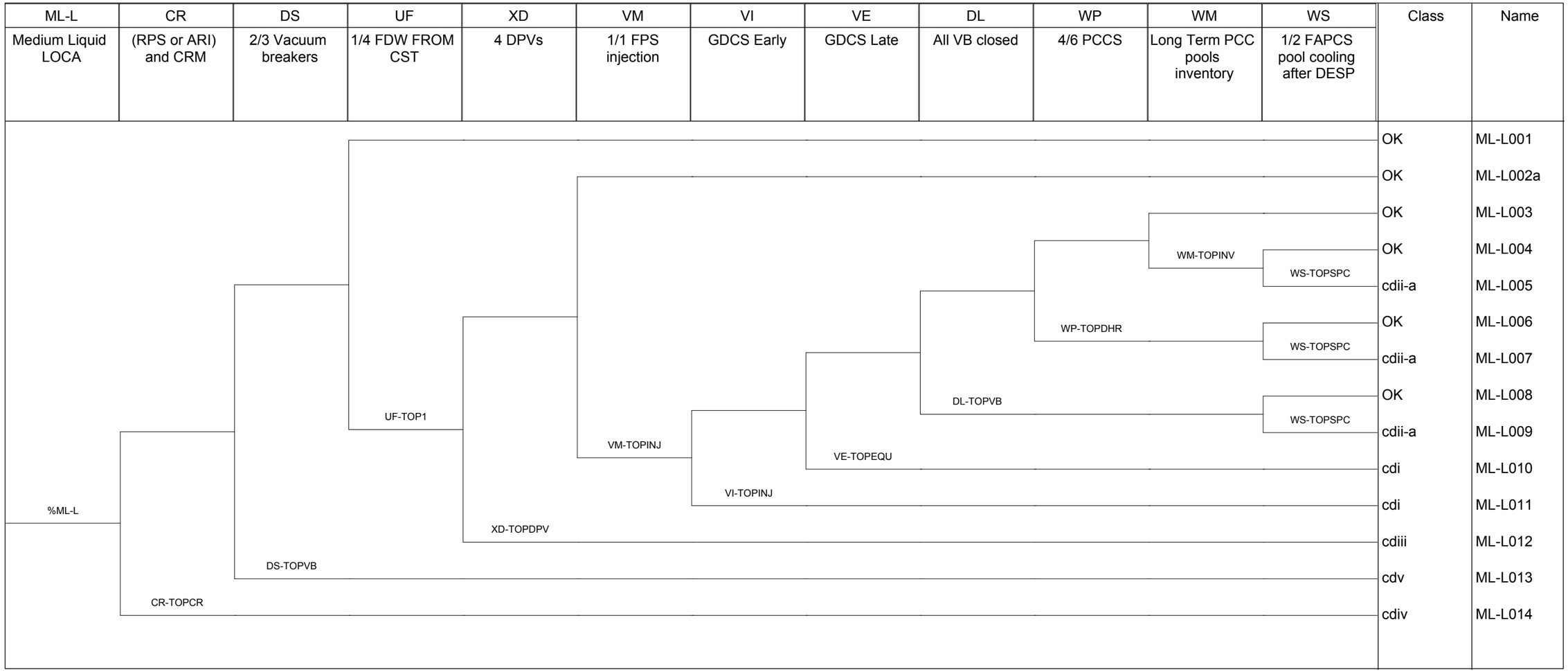

Figure 22.3-15 Medium Liquid LOCA Event Tree

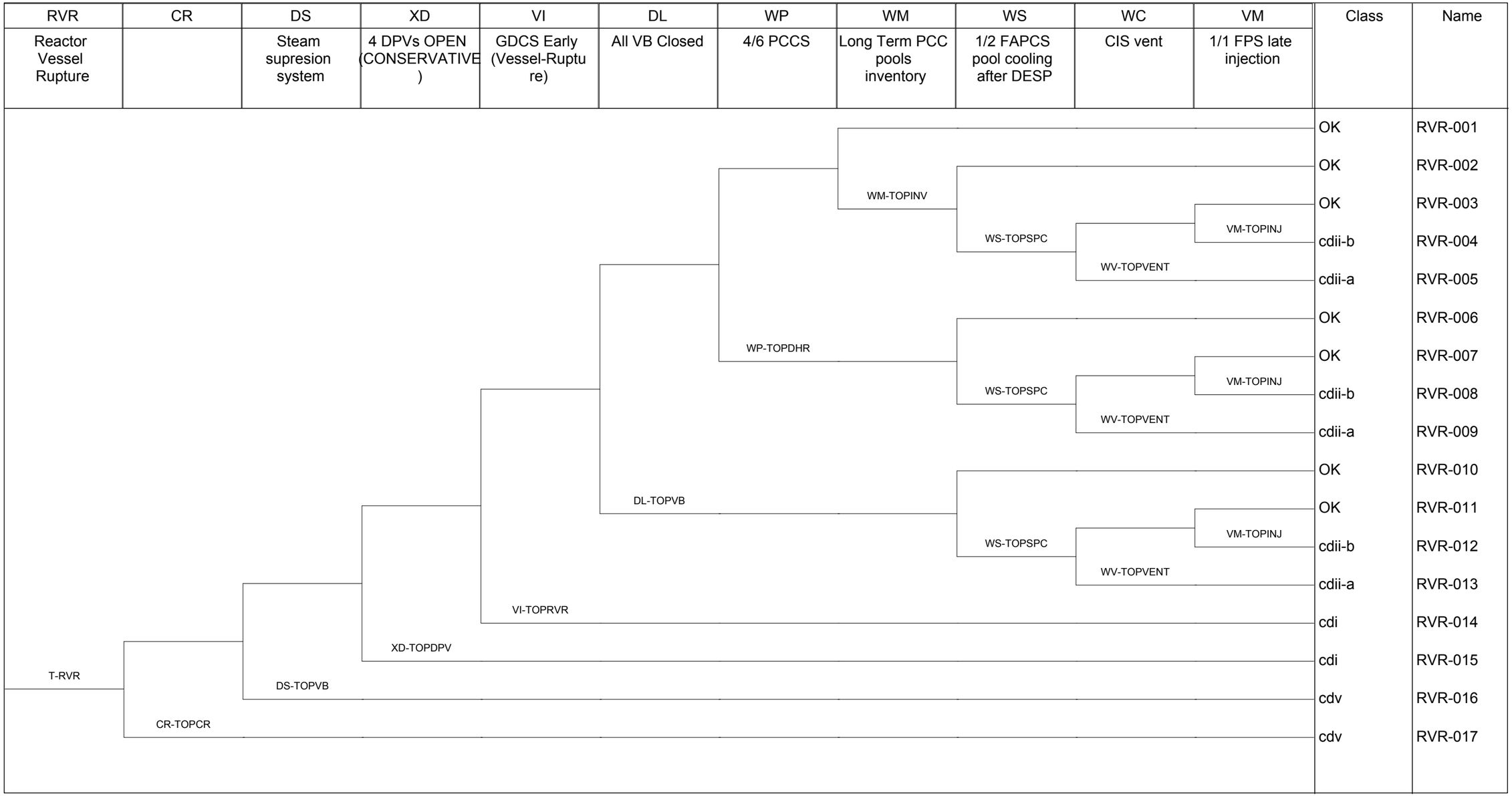

Figure 22.3-16 Reactor Vessel Rupture Event Tree

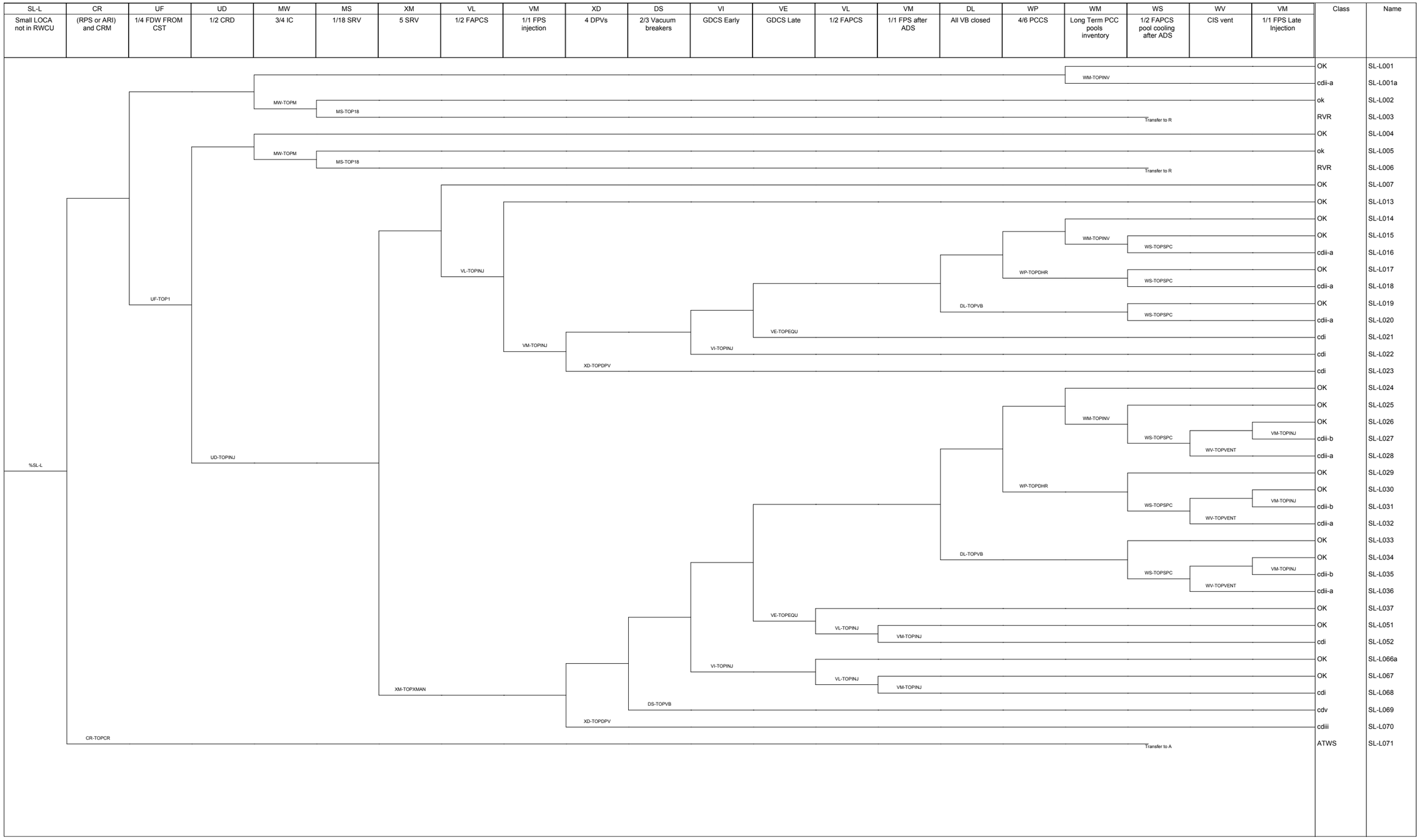

Figure 22.3-17 Small Liquid LOCA Event Tree

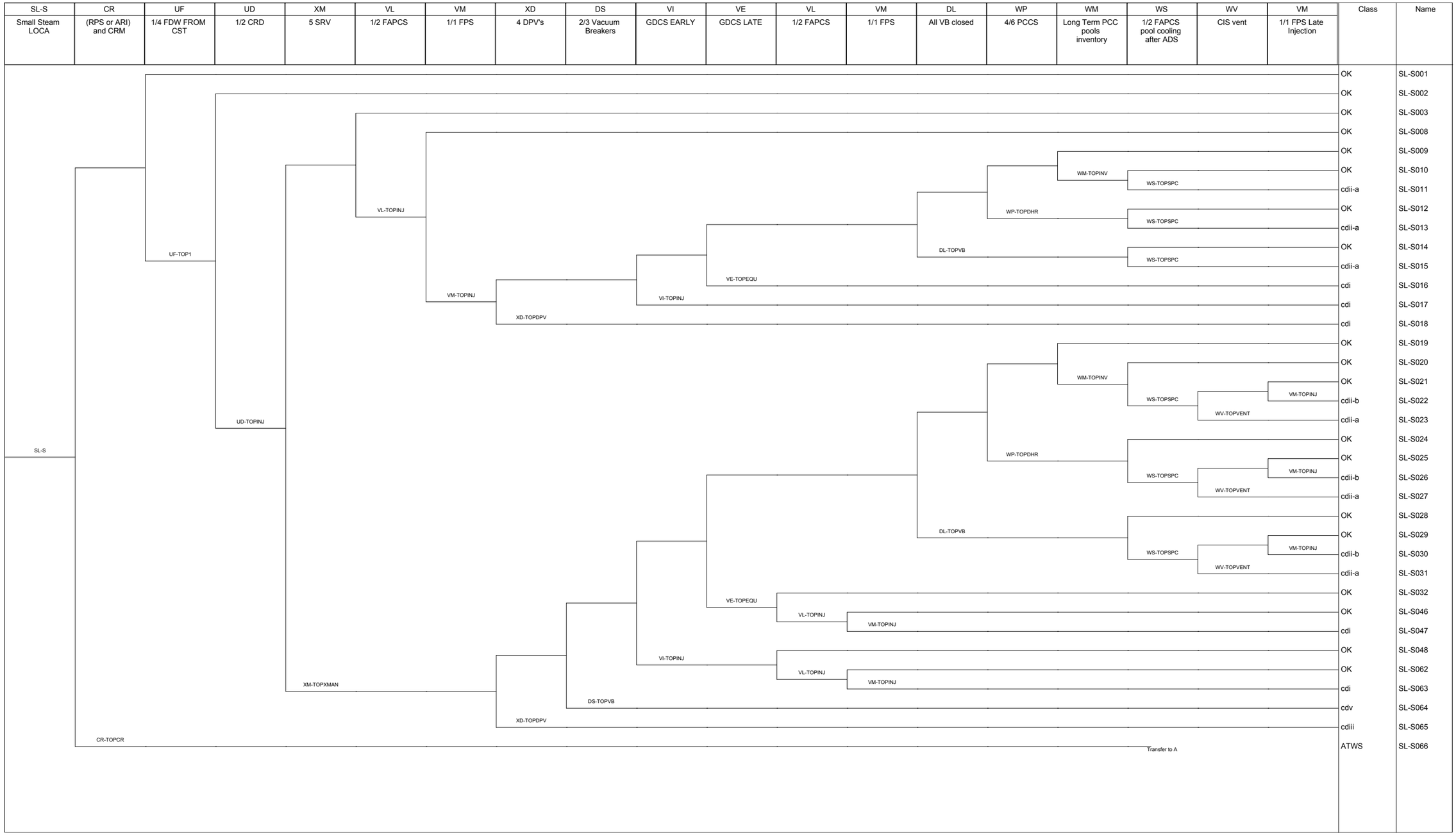

Figure 22.3-18 Small Steam LOCA Event Tree

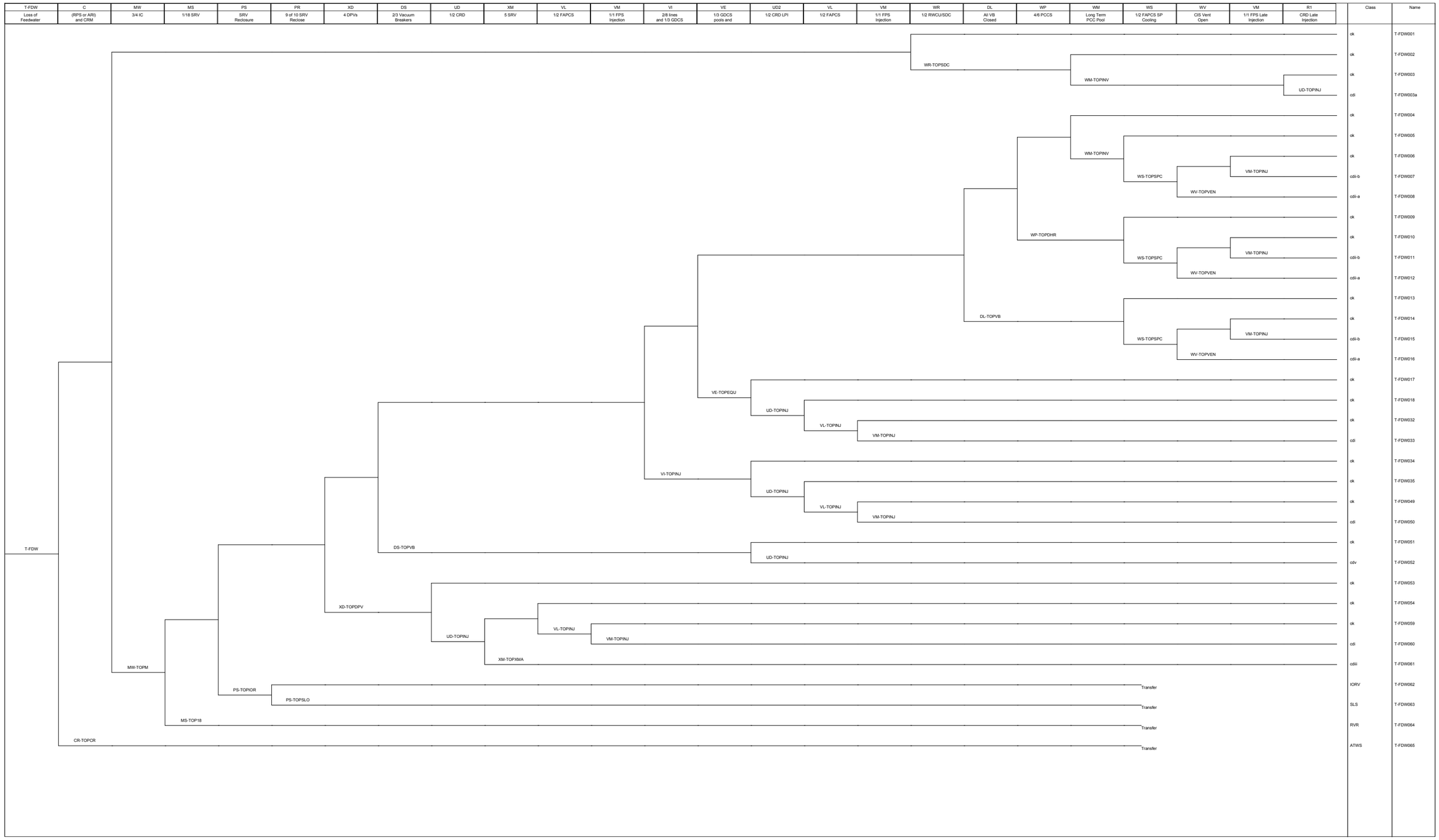

Figure 22.3-19 Loss of Feedwater Event Tree

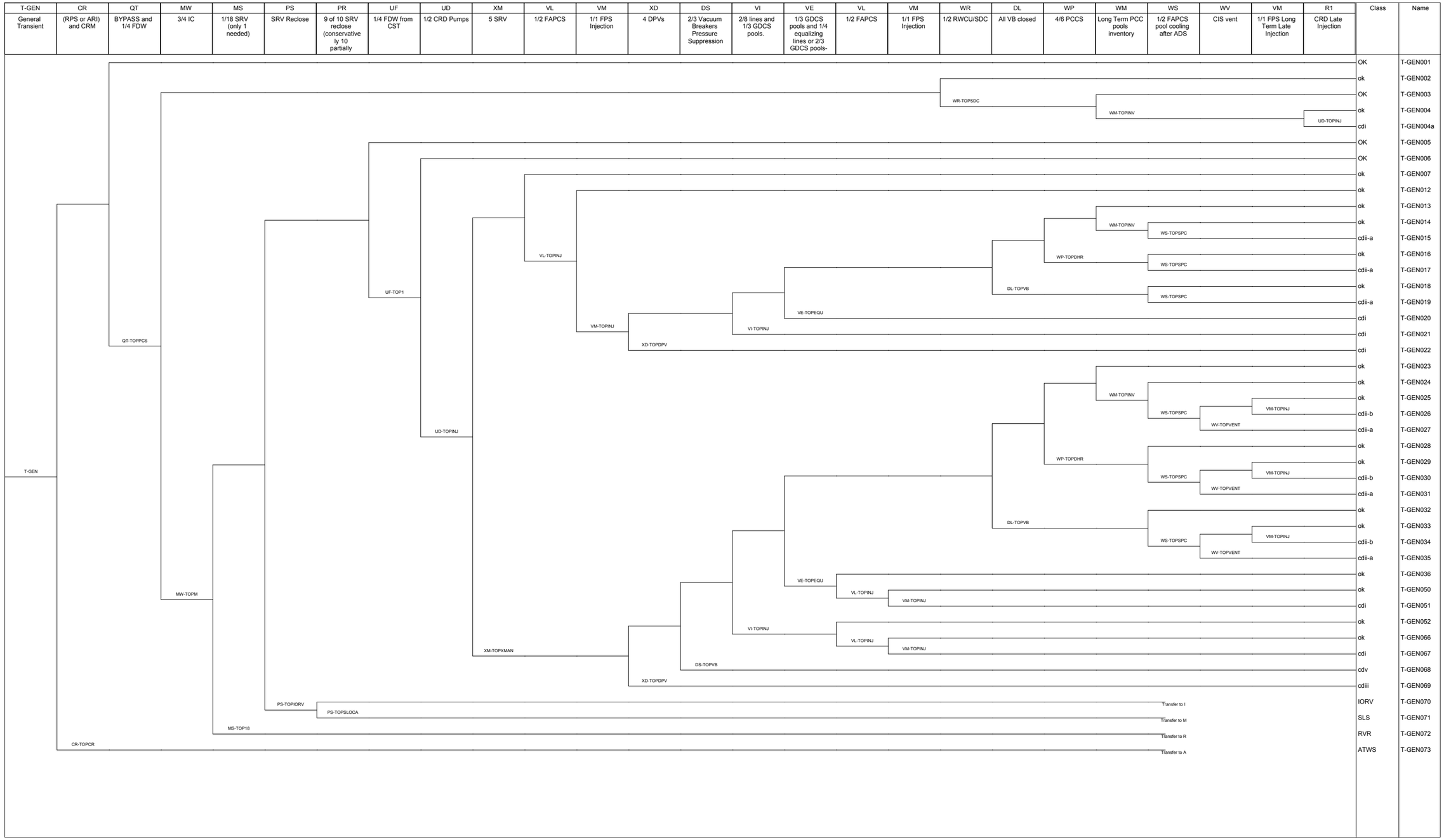

Figure 22.3-20 General Transient Event Tree

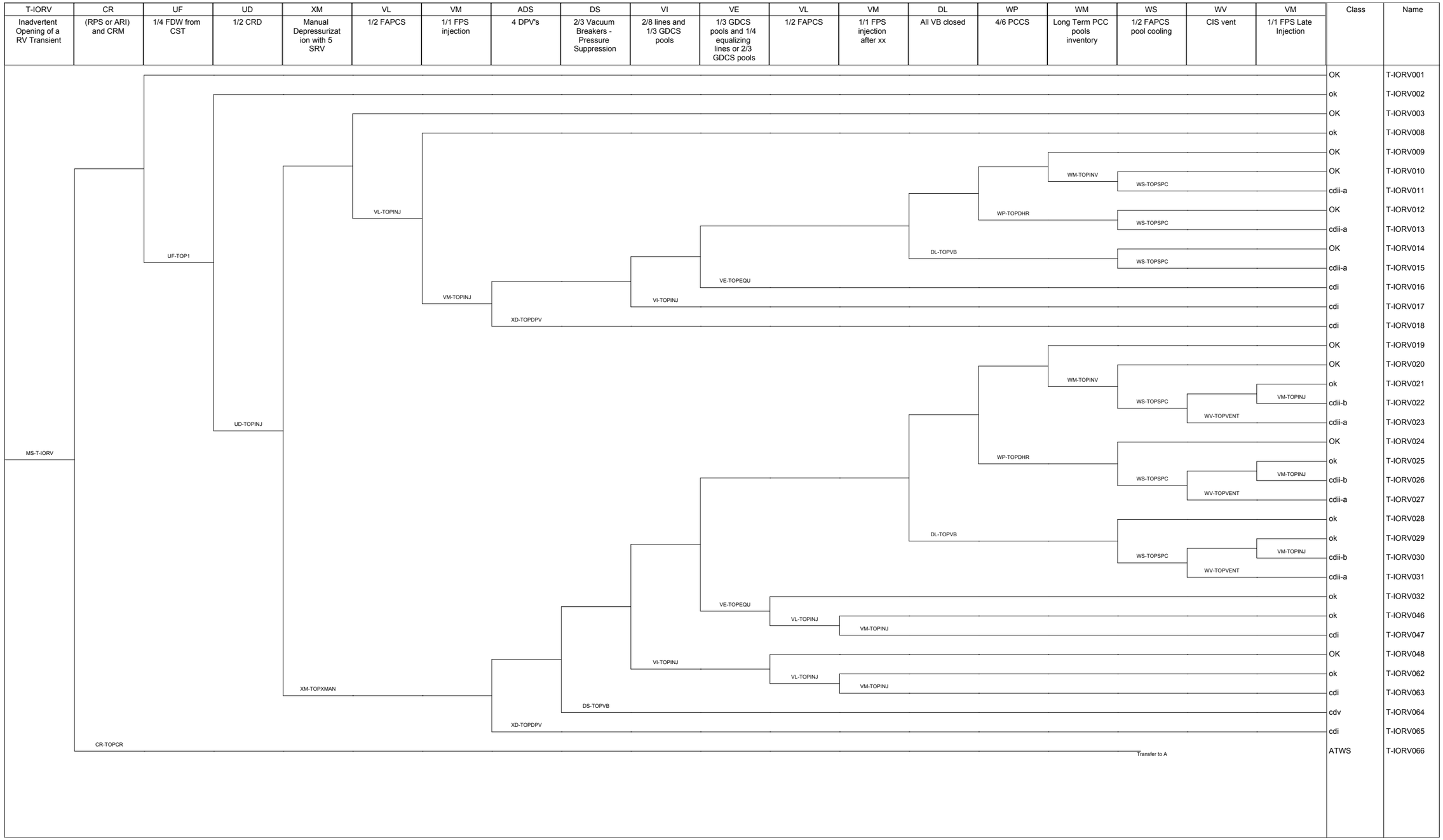

Figure 22.3-21 Inadvertent Opening of Relief Valve Event Tree

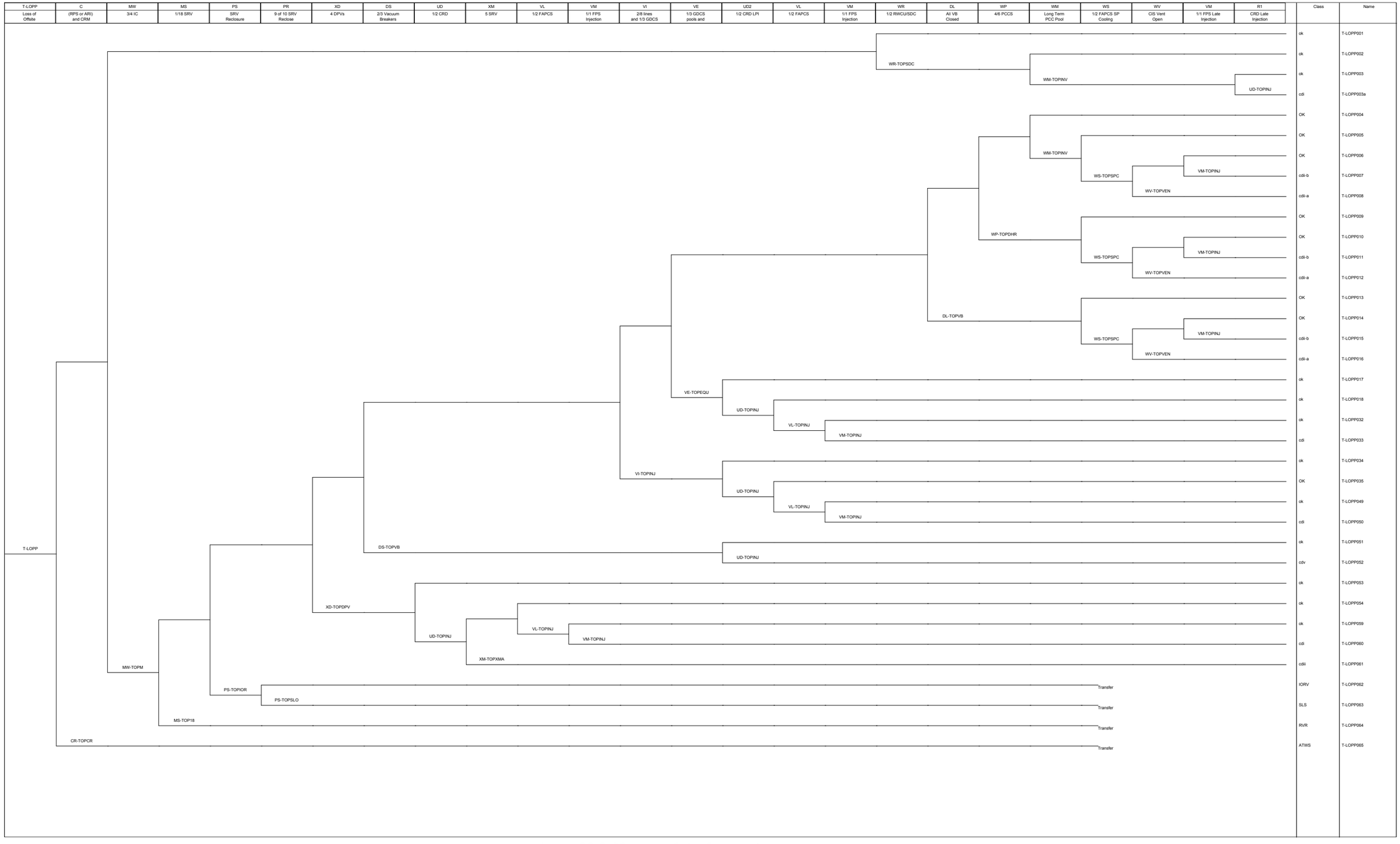

Figure 22.3-22 Loss of Preferred Power Event Tree

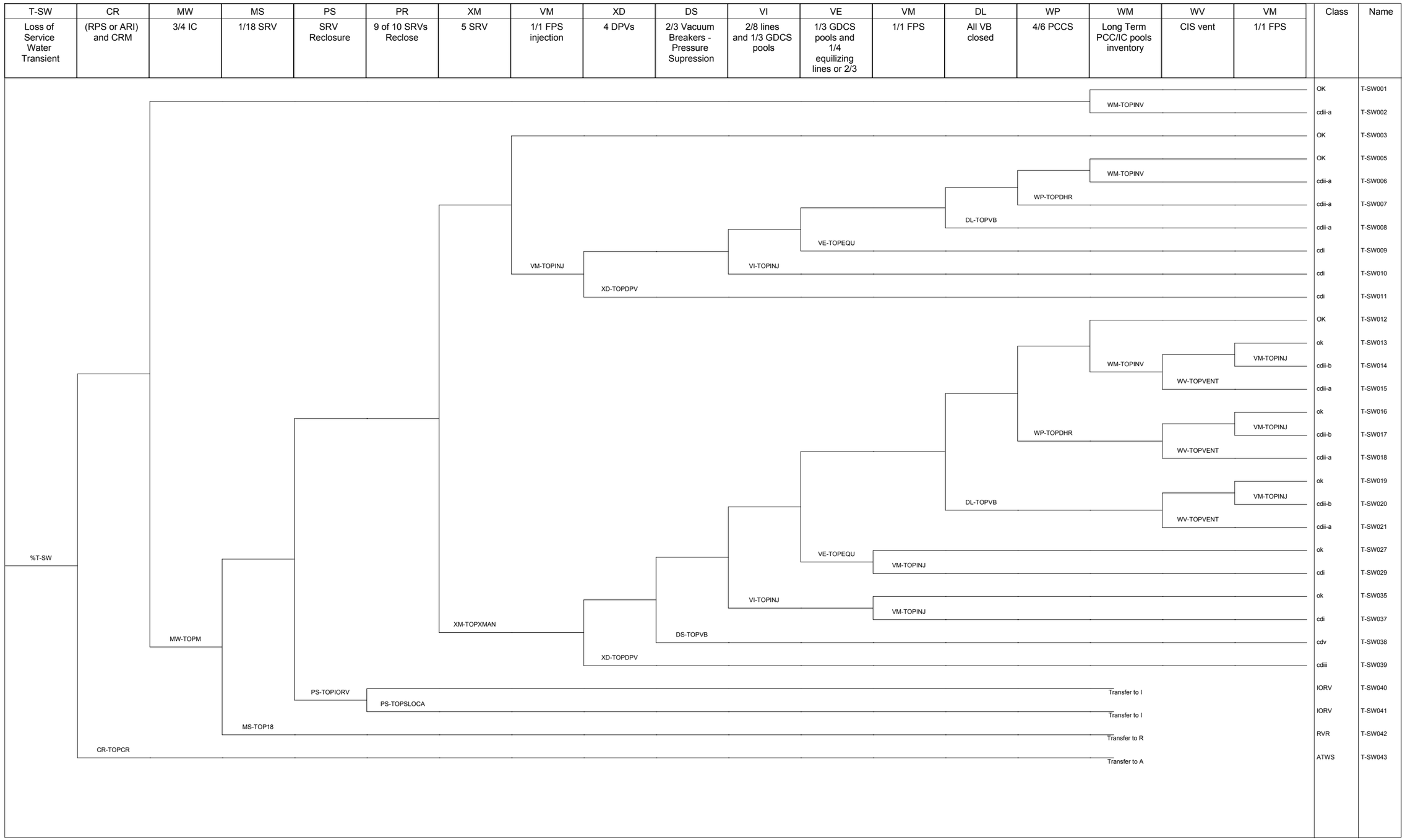

Figure 22.3-23 Loss of Plant Service Water Event Tree

22.4 SYSTEM ANALYSIS

System models have been updated, if necessary, to reflect changes in design and model enhancements. The following sections detail the changes, if any, to the ESBWR PRA system models.

22.4.1 Nuclear Boiler System

22.4.1.1 Overview

There are no design changes in the Nuclear Boiler System that affect the Revision 2 PRA system model.

The main steam line size has been changed, but the flow-limiting portions remain the same so no re-analysis is warranted. The specification of the MSIV design details does not affect the generic failure data used in the design certification PRA.

The MSIVs, which are part of the nuclear boiling system, are now modeled to receive an isolation signal from DPS. However, this function is modeled in the containment system model and is documented in 22.4.18.2.3.

22.4.2 Isolation Condenser System

22.4.2.1 Overview

In Revision 3 there are changes in the ICS design and revised PRA modeling choices; neither of these have a significant effect on the PRA results. Specifically, additional divisions of control signal were added to various valves and some valve operators were changed to be consistent with the as-designed system. One unnecessary support system dependency was removed, and accumulator check valves were added to the model as failure modes for consistency with accumulators in other systems.

22.4.2.2 System Changes

System model changes are described below; results impact is discussed in section 22.4.2.3.

22.4.2.2.1 Solenoid Vent Valve Common Cause Modeling

The solenoid-operated vent valves from the top drum of the ICS condenser are not modeled in the PRA per assumption 14 in Section 4.2. However, unused logic had been generated to model the top vent valves, and the valves were included in a common cause group with the lower vent valves (which are modeled). This modeling change removed the unused top vent valves from the common cause group; no results impact expected.

22.4.2.2.2 Remove HPNSS Dependency for F006 Valves

The F006 (condensate return bypass) valves were modeled with a dependency on the high-pressure nitrogen supply system (HPNSS) in Revision 2. However, these valves fail open on loss of nitrogen, which is the desired functional position. As such, HPNSS dependency has been removed.

22.4.2.2.3 Revised F104 Valve Signal and Operators

The Revision 2 PRA had only one division of Q-DCIS signal to each of the F104 (ICS/PCCS pool cross-connect) valves, which does not support the N-2 requirement for safety-related functions. With that arrangement, certain focused (no DPS credit) fire propagation scenarios failed the long-term pool make-up function by burning the two divisional rooms that controlled both valves to one half of the pools. A design change specifies two diverse divisions to each of the valves on one side of the pool; for example, one valve receives Div 1/3, while the other receives Div 2/4. Since the valves are in parallel, this design satisfies N-2 design criteria.

In Revision 5 of the DCD the valve operators for F104A/B/C/D have been specified; previously the operator types were assumed to be two nitrogen-operated and two nitrogen-motors in the PRA. Now there are two nitrogen-operated valves and two squib valves modeled, one of each on each side of the pool. Negligible results impact is expected because diverse operators were already assumed and nitrogen accumulators were modeled.

22.4.2.2.4 Nitrogen Operated Valve Common Cause Modeling

The previous ICS model showed the F005, F006, and F104(C/D) as nitrogen-piston operated valves (NPO); all of these valves were in one common cause group (fail to open). Recent design

changes modified the operator type for the F005 valves, so they are removed from the previous CCF group. Additionally, because of the greatly different operational conditions and requirements for the F006 and F104 valves, they have been separated into different CCF groups. The F006 valves are located in the drywell and are exposed directly to reactor temperature and pressure. The F104 valves are located in the nearly ambient condition pool area above and outside the containment; the significantly different operating conditions and requirements justify separate CCF groups.

22.4.2.2.5 Additional Signal Divisions to Lower Drum Vent Valves F009 and F010

The primary lower drum vent path valves were modeled with one division of Q-DCIS signal in Revision 2. However, they are specified in the design as receiving two divisions of control signal so that the total lower drum vent path function, which also features a parallel bypass line, meets N-2 design. The ICS model was modified to include two divisions of Q-DCIS control to the F009 and F010 vent valves; change will be negligible in baseline internal events results but will show increased reliability in the fire PRA because one fire will not be able to disable an entire ICS loop by failing the vent function.

22.4.2.2.6 Change in Valve Operator for F005 Valves

The F005 valves (condensate return) have been changed from a nitrogen-operated piston valve to an electro-hydraulically operated valve to reduce nitrogen discharge and consumption within the DW. As discussed in Section 22.4.2.2.5, the F005 valves were removed from the NPO CCF group and their own CCF group was created. No significant effect is anticipated because valve failures were not a leading cause of ICS failure in Revision 2.

22.4.2.2.7 Secondary Lower Drum Vent Valve Changes

The secondary lower drum vent pathway, valves F011 and F012, has been redesigned to support automatic ICS venting coincident with loss of all electrical power. The previous design had both parallel vent paths (F009/F010 and F011/F012) with two normally closed solenoid valves that failed closed on a loss of power. A design change was implemented to make F011 a normally closed spring-loaded relief valve and F012 was changed to a normally closed, fail open solenoid valve.

As a result, in a loss of all power the ICS condensers will still vent through the secondary lower drum vent path when system pressure reaches the setpoint of F011. Results impact should be negligible because a loss of all power (including UPS) is an infrequent scenario.

22.4.2.3 PRA Results Impact

The Revision 2 Level 1 and Level 2 internal events models were quantified with the isolation condenser system changes to assess the impact on results and insights. The results with the ICS changes incorporated are compared to the current Revision 2 results in Table 22.4.2.2-1.

Table 22.4.2.2-1

PRA Results Impact

Case	CDF (/yr)	Non-TSL (/yr)	CCFP*
Baseline Model	1.221E-8	9.616E-10	0.079
B32 Changes	1.226E-8	9.647E-10	0.079
Change	**0.410%**	**0.326%**	**0%**

*Conditional Containment Failure Probability (nTSL/CDF)

As shown, the change in overall PRA results due to modifications to the isolation condenser system is negligible. Most of the design changes involved valve operator types and increasing the number of Q-DCIS divisions to certain valves. Valve operator changes do not change system reliability significantly; the subtle increases shown in Table 22.4.2.2-1 can be attributed to slightly higher failure rates of the cross-connect squib valves as compared to the previous nitrogen-piston valves. The additional divisions of control will show increased reliability in the RTNSS and focused PRA studies in which mitigating system redundancy and diversity is reduced by the initial conditions of those applications.

The quantification was performed with a truncation value of 1E-15/yr.

22.4.2.3.1 Qualitative Assessment of External Events Impact

Most of the ICS model changes are in the direction of increased reliability for external events scenarios. The ICS/PCCS cross-connect valves now receive two divisions of Q-DCIS each instead of just one as in the Rev 2 PRA. This change eliminates the possibility that a fire propagation case alone can fail the pool make-up function because each side of the pool receives all four divisions. Increasing the number of Q-DCIS control divisions to the condenser lower drum vent valves makes the venting function N-2 compliant and increases reliability as well. The additional control division for F009 and F010 will further increase ICS reliability in the fire PRA.

There are no internal flooding sources in the Q-DCIS divisional rooms to which these design changes are contained; no impact on the flooding PRA is anticipated.

All ICS components are located in the reactor building, which is seismic category 1 and not affected by the strongest of high winds. As such, no high winds PRA results impacts are expected.

All changes to the ICS are within the safety-related digital Q-DCIS or the reactor building; no change with respect to the safe shutdown earthquake event is expected.

22.4.2.4 Conclusion

The changes to ICS have had negligible impact on system reliability, CDF, and nTSL release frequency; the CCFP did not change.

None of the risk insights listed in DCD Section 19 are impacted as a result of the isolation condenser system changes.

22.4.3 Control Rod Drive High Pressure Injection (C12)

22.4.3.1 Overview

This section covers changes made to the Control Rod Drive (CRD) high-pressure (HP) injection system model since the previous revision. The CRD fault tree has been updated to account for design changes as well as modeling improvements. None of the changes have a significant effect on the overall PRA results. The design changes that impact the CRD HP injection model are as follows:

(1) Two check valves have been added to the individual train injection flow paths.

(2) Two manual valves have been added to the individual train injection flow paths.

The following CRD HP injection system PRA changes are model enhancements that were not driven by design changes:

(1) Mutually exclusive manual valve misposition closed errors were removed from the model.

(2) Valve misposition closed errors that would not go undetected in the Main Control Room (MCR) were removed from the model.

22.4.3.2 System Changes

System model changes are described below. The impact of the changes is shown in Section 22.4.3.3.

22.4.3.2.1 Check Valves

Check valves C12-F019A and F019B have been added to the design. These check valves are located immediately upstream of the flow control valves F020A and B.

Failure of C12-F019A or B to open, or failure to remain open, is now modeled under an OR gate as failing the respective train. A new CCF group was also developed for these two check valves, and CCF is modeled as failing both trains.

22.4.3.2.2 Manual Valves

Manual valves C12-F018A and F018B have been added to the system design. These valves are located in the parallel discharge piping upstream of the new check valves discussed in the previous section. In order to avoid confusion, it should be noted that there were manual valves numbered C12-F018A and B in the earlier design, but those valves were removed; the numbers are simply being reused.

Misposition of C12-F018A or B is modeled under an OR gate with other in-line components that fail the applicable train. Because of the high screening values used for latent manual valve misposition errors, no misposition CCF is applied to manual valve mispositions.

22.4.3.2.3 Mutually Exclusive Valve Mispositions

The modeling of manual valves C12-F064 and F065 was modified to more accurately represent normal system operation. Since these valves could not both be closed simultaneously and still have one normally running CRD pump, the misposition closed of normally open C12-F064 was

removed from the model. While it is improbable that locked open C12-F065 would be mispositioned closed, it is possible, and the closure would not be detected in the MCR. Therefore, C12-F065 remains in the model as a misposition event.

22.4.3.2.4 Misposition Errors Would Not Go Undetected

Individual manual suction valve C12-F003A could not be mispositioned closed in the current model because the A pump is modeled as running; only one individual suction valve could be mispositioned at any one time during normal operation. Misposition of the running pump suction valve would trip the pump on low suction pressure.

In addition, further study revealed that the CRD auxiliary oil pump on the standby pump (B, as modeled) is normally running. The main oil pump would be running on the inservice pump (A, as modeled). Therefore, RCCW manual valves P21-F049A/B or P21-F050A/B misposition closed would not go undetected because there is a high oil temperature alarm in the Main Control Room (MCR).

Therefore, misposition closed events for C12-F003A, P21-F049A and B, and P21-F050A and B were removed from the CRD HP injection system model.

22.4.3.3 Results Impact

There is some offset between the decrease in system reliability attributable to the additional failures for the new components and the reliability increase gained by removing some of the manual valve misposition events. However, update of the CRD HP injection system model does reduce the failure rate from 1.997E-01 to 1.006E-1 for the two-pump top event, and from 2.088E-2 to 1.643E-2 for the one-pump top event. The increase in CRD HP injection reliability has only a slight impact on the contribution of certain accident sequences, but does not alter the overall PRA results.

22.4.3.4 Conclusions

Neither the design changes nor the modeling changes have a significant effect on the overall PRA results, and the dominant cutsets continue to be mispositioning events. None of the key insights in DCD Section 19 are impacted as a result of CRD HP injection modeling changes.

22.4.4 Standby-Liquid Control System

22.4.4.1 Overview

There were no design changes in the standby-liquid control system (SLCS) that affect the Revision 3 PRA system model. In addition, no major changes to the PRA fault tree were required for the SLCS.

22.4.4.2 Description of Design Changes

A review of the SLCS was conducted showing no changes to system configuration, components, design, capacities or equipment location. As a result, no design changes were incorporated in the SLCS Revision 3 PRA system model.

22.4.4.3 Description of PRA Model Changes

A simplification of the SLCS PRA fault tree was made to remove failures of manual injection hardware on the squib valves. The failure rates of the manual hardware to injection SLCS were about two orders of magnitude lower than the human error event for manual SLCS injection and does not significantly impact the SLCS results. The PRA insights continue to show that SLCS risks are driven by the failure of check valves and squib valves.

22.4.5 Changes To Instrumentation, Logic And Control System – (C62, C63, C71, C72 And C74)

22.4.5.1 Overview

The purpose of this section is to address the impact of changes to the fault trees models for the instrumentation, logic and control (I&C) systems. The models described in Section 4.5 have been updated to address design changes, model enhancement to address existing functions that have not been previously credited, data changes, and model corrections. As noted in Section 4.5 these simplified models primarily address power dependencies and the impact of common cause software failures. The risks associated with the changes to the models are addressed qualitatively in this section. The impact to core damage frequency for the simplified model is analyzed in Section 22.7. In addition, a sensitivity is performed to address the additional risk associated with specific components such as sensor/transmitter, power supplies etc.

22.4.5.2 System Design and PRA Model Changes

22.4.5.2.1 DCD Revision 5 Design Changes

The following model changes are associated with the DCD Revision 5 design changes:

(1) Added a third load driver to DPS model for SLC valves

(2) Added a third load driver to DPS model for GDCS valves

(3) Added a second load driver to pool cross connect valve to DPS model for B32-F104A and B32-F104D.

(4) Added a second and a third load driver to pool cross connect valves to DPS model for B32-F104B and B32-F104C.

(5) Deleted Q-DCIS logic for containment vent valves.

(6) Created simplified Q-DCIS logic for manual actuations of ICS valves B32-F012A, B32-F012B, B32-F012C and B32-F012D.

22.4.5.2.2 Model Enhancements - Development of Additional Logic

The following logic changes have been developed in Revision 3, since these are undeveloped in the Revision 2 of the I&C models:

(1) Developed DPS logic for the GDCS equalizing valves.

(2) Created logic for DPS isolation of MSIVs.

(3) Created logic for DPS SCRAM.

(4) Created logic to allow credit for operator manual scram if RPS signal fails.

(5) Added common cause software (C51-CCFSOFTWARE) failure for NMS.

(6) Added common cause software (C71-CCFSOFTWARE) failure for RPS.

(7) Updated the simplified SSLC/ESF ADS inhibit from ATWS/SLC logic, and developed logic for ADS inhibit by DPS.

(8) Developed logic to address long term power failure to DPS.

(9) Created multi-divisional Q-DCIS logic to address both manual and automatic actuation for ICS/PCCS pool cross-connect valves F104A, F104B, F104C and F104D. Prior revision assumed single division. In addition, created tops for manual actuation of pool cross connect valves using DPS.

(10) Created divisional Q-DCIS logic to address both manual and automatic actuation signal (Div 4) for ICS valves B32-F005A, B32-F005C, B32-F006B and B32-F006D.

(11) Created multi-divisional Q-DCIS logic to address both manual and automatic actuation for ICS vent valves B32-F009A, B32-F009B, B32-F009C, B32-F009D, B32-F010A, B32-F010B, B32-F010C and B32-F010D.

(12) Created N-DCIS logic to address automatic isolation for RWCU/SDC valves G31-F004A, G31-F004B, G31-F044A and G31-F044B

(13) Updated the initiator conditional gates for logic for signals under the DPS and RPS models. The change ensures that low level applies to all initiating events.

22.4.5.2.3 Model Enhancements – Data Changes

A few data changes have been incorporated in Revision 3 to address consistency and to minimize uncertainty. The data changes that have been implemented for the I&C systems are shown below:

(1) Changed all the DPS load driver exposure time based on quarterly tests.

(2) Changed all the RPS and MSIV load driver exposure time based on quarterly tests.

(3) Changed CCF data for start failures of FMCRD. Assumed a bounding value based on an individual demand failure probability for AC Motor of 3E-05 listed in the type code file.

22.4.5.2.4 Model Enhancements – Model Corrections

A review of the models and results for the I&C systems identified issues that needed to be addressed. The following corrections to the models have been incorporated in Revision 3.

(1) Corrected the N-DCIS power dependency from safety-related to nonsafety-related power under gates C62-CAB1-PSA and C62-CAB1-PSB

(2) Delete basic event “C74-CCFATSOFTWARE” from the ATWS/SLC models. ATWS/SLC logic processors use discrete programmable logic devices.

(3) Replaced basic event “C71-LDD-CF-MSIVALL” with event “C71-LDD-CF-2OF4G” under the logic for each MSIV valve.

(4) Added common cause event “C72-LDD-CF-LOADS” to the RWCU isolation valve logic. Similarly, added common cause event “C72-LDD-CF-LOADS” to the logic for ICS/PCCS pool cross-connect valves.

22.4.5.2.5 Model Enhancements – Model Preferences

The system models have been updated to improve clarity, improve performance, avoid potential modeling error traps, and to remove logic that is not used. The following changes have been implemented for Revision 3.

(1) The DPS gate transfers in B32 were renamed and required creating new system tops. These are equivalency gates for existing logic tops, so there is no impact to the results.

(2) Renamed all load drivers for ICS/PCCS pool cross-connect valves.

(3) Restructured DPS power model under gate C72-DPSPOWER. However, it should be noted that both trees are logically equivalent.

(4) Created equivalency gates to address changes in the names of transfer gates for ICS in model for Q-DCIS.

(5) Deleted Q-DCIS logic for DW/WW vacuum breakers. The logic was not used originally and the system has been redesign as a stand-alone system.

(6) Deleted the DPS logic for DW/WW vacuum breakers isolation valves. The logic was not used originally and the system has been redesign as a stand-alone system.

(7) Updated local C71 and C72 databases initiating event frequencies for consistency with master database. These changes do not impact results since the initiating data in the master database is used during quantification.

(8) Deleted initiating event %ML-L-RWCU and %SL-L-RWCU from gate C71-LOCA. All liquid LOCA events are included under initiating events %ML-L and %SL-L. These changes do not impact results since event trees do not use these events.

22.4.5.3 Qualitative Evaluations of the I&C Model Changes

A qualitative evaluation of the changes identified above has been performed to help understand the risk impact of the changes.

22.4.5.3.1 Qualitative Evaluation of Design changes

22.4.5.3.1.1 Design Changes #1 through #4

A design change has been developed to help minimize the impact of spurious actuations. The change requires two load drivers in series for solenoid valves, and three load drivers in series for squib valves. This change impacts the PRA models for GDCS squib valves, ICS/PCCS cross connect valves, and SLC squib valves. Although this change causes additional failures, the impact of individual load driver failures is negligible. The impact of this change for GDCS or ICS/PCCS cross connect valves is expected to be small due to the redundancy in these systems. In addition, there is a significant time to restore failures associated with ICS/PCCS pool cross connect valve. The change causes some impact to ATWS sequences since the success criteria for SLC requires both trains. However, the impact of the additional drivers is small because SLC actuation relies on four divisions. The high degree of redundancy in the logic mitigates the impact of individual components, and the overall unreliability of the control logic is dominated by common causes across multiple divisions.

22.4.5.3.1.2 Design Change #5

A design change has been developed to remove Q-DCIS logic for the containment vent valves. It eliminates some instrumentation failure modes for containment vent and makes this function more reliable. The impact of removing the Q-DCIS logic is addressed in Section 22.4.18.

22.4.5.3.1.3 Design Change #6

A design change has been developed to remove Q-DCIS automatic actuation of ICS vent valves F012A through F012D. Removing the automatic actuation logic results in reliance on manual operator action for actuation of this valve. The impact of removing the Q-DCIS logic is addressed in Section 22.4.2.

22.4.5.3.2 Qualitative Evaluation of Model Enhancements –Additional Logic

22.4.5.3.2.1 Additional Logic #1

Model enhancements have been implemented to credit DPS manual actuation of the GDCS equalizing lines. The prior model only credits safety related signals for automatic and manual actuation of these squib valves. These model enhancements address existing functions that have not been previously credited. Incorporating these changes reduce the CDF contribution of the applicable sequences because the changes make them less vulnerable to common cause failure of software for Q-DCIS. The affected sequences dropped below the truncation values used during quantification. The total impact to core damage frequency for the simplified I&C models is analyzed in Section 22.7.

22.4.5.3.2.2 Additional Logic #2

Model enhancements have been implemented to credit automatic MSIV isolation by DPS. These changes do not impact core damage frequency significantly. However, the changes are likely to reduce the contribution of containment bypass considerably since it makes them less vulnerable to common cause failure of software for Q-DCIS. The impact of this change for the simplified I&C models is analyzed in Section 22.4.18. In addition, documentation in Section 22.8 lists this model enhancement as a notable change.

22.4.5.3.2.3 Additional Logic #3

Model enhancements have been implemented to credit automatic reactor SCRAM using DPS. The model assumes that DPS scram is generated by same signals RPV level and pressure signals that generate ARI. No change in CDF or LRF occurs because the same signal used for ARI is also used for RPS. Additional details do not impact the results because the PRA model credits primary and backup SCRAM, ARI, FMCRD follow up, and manual SCRAM for reactivity control via control rod insertion.

22.4.5.3.2.4 Additional Logic #4

Model enhancements have been implemented to credit manual SCRAM. These model changes address existing functions that have not been previously credited. These changes slightly reduce the contribution to CDF and LRF from ATWS scenarios because the dominant contributor involves common cause failure due to control rod binding. However, it should be noted that a conservative screening value was used for the operator human error probability to avoid masking

sequences below truncation. Therefore the impact of the change is small. The total impact to core damage frequency for the simplified model is analyzed in Section 22.7.

22.4.5.3.2.5 Additional Logic #5 and #6

Model enhancements have been implement to address common cause software failures for NMS, and for RPS. These changes conservatively assume that if the common cause software failure occurs, neither a high nor a low signal is generated and a SCRAM signal does not occur. Furthermore, the NMS common cause software error is conservatively assumed to fail the signals for RPS (APRM), SLC permissive (SRNM), Feedwater Runback permissive (SRNM), and ADS SSLC/ESF inhibit permissive (APRM). The ADS inhibit from DPS is not affected (raw signal), but RPV blowdown occurs since the logic requires both the SSLC/ESF and DPS inhibit to succeed. These changes are expected to cause an increase in ATWS sequences. However, the impact to the PRA results is minimized by manual SCRAM, and ARI. Similarly, it should be noted that the NMS signals to RPS are backed up with high reactor pressure signals. The diversity for this function helps to avoid skewing the results by the conservative values used for common cause software failure. The importance measures indicate low fractional contribution (FV), but large increases (RAW) if the software for NMS fails. The impact from RPS software failure is not significant as that for NMS. The total impact to core damage frequency for the simplified model is analyzed in Section 22.7.

22.4.5.3.2.6 Additional Logic #7

Model enhancements have been implement to update the ADS inhibit model. The prior model assumed the safety related ADS inhibit signal was also used to perform the ADS inhibit by the DPS system. The ADS inhibit from DPS uses a raw signal from NMS to help avoid a common cause software error. However, as noted earlier, the ADS inhibit function requires both the SSLC/ESF from ATWS/SLC and the ADS inhibit from DPS to succeed. Both of these systems are highly reliable, so there is only a small increase in the failure of this function.

22.4.5.3.2.7 Additional Logic #8

Model enhancements have been implemented to address potential DPS control failure, due to long term power failure. Most of the functions from DPS occur early in the accident scenarios, so their function is not vulnerable to the limited capacity of the N-DCIS batteries during SBO. However, the GDCS equalizing lines, or the ICS/PCCS pool cross connect valves are not demanded until many hours or even days after the initiating event. The prior PRA model assumes that either the DPS functions were demanded early in the scenario, or that there is adequate time to restore offsite power. These model changes help address any potential concern associated with the long term availability of power to DPS due to a prolonged station blackout. No significant impact is expected to CDF or LRF.

It should be noted that an electrical design change to include the ancillary diesels for SBO scenarios has been implemented, and that power is provided to the DPS system. Additional details on this design change and its risk impact can be found in the AC power and UPS documentation in Sections 22.4.14 and 22.4.15.

22.4.5.3.2.8 Additional Logic #9 through #11

Model enhancements have been implemented to provide multi-divisional control for valves in several systems. The prior version of the PRA conservatively assumes that a single divisional control failure would impact the functionality of these valves. These model enhancements address existing functions that have not been previously credited. The impact of these changes helps to provide more defense in depth for the valve control system dependencies. Additional discussion on these changes can be found in Section 22.4.2

22.4.5.3.2.9 Additional Logic #12

A model enhancement has been implemented to replace control signals for selected RWCU/SDC valves from DPS control signals to N-DCIS control signals. The prior version of the PRA conservatively assumes that the signal is generated from DPS instead of N-DCIS. This assumption is conservative since the DPS models uses N-DCIS signals. The appropriate support system failures are captured in the prior analyses. However, some overestimation occurs since specific DPS failures (controller etc.) are not applicable for these valves. The impact of this change for the simplified model is analyzed in Section 22.4.18.

22.4.5.3.2.10 Additional Logic #13

A model enhancement has been implemented to update the initiator conditional gates for logic signals under the DPS and RPS models. The low level logic sensor/transmitter logic gates are conditioned by a gate that includes all the initiating events since all are applicable for core damage to occur. This change helps minimize the potential that some initiators are excluded inadvertently. However, it should be noted that the fault tree models are conservative since credit is not given to diverse components, encompassing multiple parameters, for generating the same signal under a system. The only exception to this rule involves reactor pressure and neutron flux since there is close correlation between them. The changes to the results may cause some double counting, but are negligible since these changes just help fine-tune the models. It should be noted that the models do not yield significant variations in the initiator distribution in Section 22.7.

22.4.5.3.3 Qualitative Evaluation of Model Enhancements – Data Changes

22.4.5.3.3.1 Data Changes #1 and #2

Data changes have been implemented to address potential latent failures of load drivers. The exposure time for latent failure for load drivers has been increased based on an assumed quarterly testing basis. This change impacts the load drivers included for the RPS/MSIV and DPS systems. The impact of increasing the probability of failure for load drivers is small because most systems rely on multiple divisions for actuation or trip. The high degree of redundancy in the logic mitigates the impact of individual components, and the overall unreliability of the control logic is dominated by common causes across multiple divisions. One exception involves the conservative model for feedwater runback during ATWS. This model assumes load drivers are used to help meet this function, but failure to runback either pump is assumed to lead to core damage. The total impact to core damage frequency for the simplified model is analyzed in Section 22.7.

22.4.5.3.3.2 Data Change #3

A data change has been implemented to update the common cause failure of FMCRD. The purpose of the change was to provide a conservative estimate for a common cause failure of a large number of motors used for FMCRD. The bounding estimate causes an increase of 50% in the probability of failure for this failure mode. However, the change is negligible to CDF or LRF because there is a very large degree of redundancy and diversity for the reactivity control function. It should be noted the bounding failures modes for reactivity control are associated with control rod binding.

22.4.5.3.4 Qualitative Evaluation of Model Enhancements – Model Corrections

22.4.5.3.4.1 Model Correction #1

A correction of the support systems for N-DCIS has been implemented. The Revision 2 model for one N-DCIS cabinet includes power dependencies from safety-related power instead of nonsafety-related power. Although this error does not impact significantly the Revision 2 internal events CDF, or LRF, it could have significant impact on the fire analyses. The issue has already been addressed in the Revision 2 fire analyses. This change corrects the error in the updated baseline model.

22.4.5.3.4.2 Model Correction #2

A correction to the model has been implemented to delete common cause software error from ATWS/SLC. The prior version of the model includes a common cause software failure for the ATWS/SLC logic models. However, this failure mode is not applicable since the ATWS/SLC logic processors use discrete programmable logic devices. This change would be expected to significantly improve the reliability for this system since common cause failure of software is very conservative. However, because ATWS/SLC uses signals from NMS, the change in risk actually increases slightly for the applicable sequences. This increase is expected because the newly added NMS common cause software failures may also impact one of the signals to RPS.

22.4.5.3.4.3 Model Correction #3

A correction to the model has been implemented to incorporate the same common cause failure of load drivers for RPS and MSIV isolation logic. The prior version of the model uses different common cause events for the load drivers. This change does not impact CDF significantly. The change results in an increase in the LRF frequency of ATWS sequences with containment bypass since both RPS and MSIV isolation include the same common cause event. However, it should be noted that the impact is mitigated by additional model enhancements that credit DPS isolation signal for MSIVs.

22.4.5.3.4.4 Model Correction #4

A correction to the model has been implemented to add common cause failure of load drivers to RWCU isolation valves, and ICS/PCCS pool cross-connect valves. A small change in CDF results for sequences involving breaks outside containment in the RWCU lines since the common cause degrades the degree of defense in depth for other systems that include DPS control signals. The contribution to CDF of scenarios involving breaks outside containment is very low. However, these scenarios involve containment bypass, so the impact to LRF is more

pronounced. A small change in CDF is expected for DHR involving failure loss of makeup to the pools since the common cause degrades the degree of defense in depth for other systems that include DPS control signals. Similarly, the contribution to CDF for these sequences is low. Although sequences involving loss of decay heat removal may lead to containment bypass, there is sufficient time to develop other alternatives for pool makeup.

22.4.5.3.5 Qualitative Evaluation of Model Enhancements – Model Preferences

The changes for model preferences #1 through #10 are incorporated for model clean-up, and do not impact risk. These changes are listed above for completeness.

22.4.5.4 Sensitivity Study for the Detailed I&C Models

The purpose of this limited scope sensitivity study is to address the impact of the modeling of individual components in the I&C systems.

22.4.5.4.1 Changes for the Detailed I&C Models

The baseline N-DCIS and Q-DCIS models have been modified to address the impact of individual components. The models were adjusted to address failures of cabinet power supplies, sensor/transmitters, transducers, trip units and controllers. A minor change was incorporated in DPS for the RWCU/SDC isolation logic to allow inputs from multiple divisions. The RPS and MSIV isolation models were not changed.

22.4.5.4.2 Qualitative Evaluation for the Detailed I&C Models

The changes that have been incorporated to address the impact of individual components do not have a significant impact on CDF or LRF. The primary reason for the limited impact is that the simplified models already capture the dominant failure modes and dependencies. In addition, the sensor, hardware and logic are diverse for RPS, SSLC/ESF, ATWS mitigation logic, and Diverse Protection System (DPS) logic.

22.4.5.5 Conclusions

The overall impacts to CDF and LRF due to changes to the I&C models are small. The primary reason is that the dominant common cause failures, and dependencies have been addressed in the baseline I&C models. The impact to risk of individual changes is minimized by the high level of redundancy, diversity, and passive nature in the design of the ESBWR. Comprehensive evaluations incorporating all changes to event trees, system fault trees and data have been included in Sections 22.7 and 22.8.

22.4.6 Gravity-Driven Cooling System

22.4.6.1 Overview

There are no design changes in the gravity-driven cooling system (GDCS) that affect the Revision 3 PRA model. Changes were made to the GDCS PRA model including the addition of a new system top event in support of event tree changes discussed in Section 22.3. However, the changes made to the GDCS fault tree model did not significantly impact the ESBWR PRA model.

22.4.6.2 Description of Design Changes

A review of the GDCS was conducted showing no changes to system configuration, components, design, capacities or equipment location. As a result, no changes were incorporated in the GDCS Revision 3 PRA system model.

22.4.6.3 Description of Model Changes

System model changes to GDCS are described below.

22.4.6.3.1 Modification/Addition to GDCS Top Gates

Two changes were made to the GDCS PRA model including (i) a name change and (ii) the addition of a new system top event. The name of the top event previously identified as VI-TOPRUP was changed to VI-TOPRVR. This top event maintains the functions of the success criterion associated with reactor vessel rupture scenarios. This change has no direct impact to the CDF.

An additional top event was added to GDCS to support event tree changes as discussed in section 22.3. This top event was called VI-TOPRUP. For future analysis of GDCS, care should be taken to avoid confusion between the Revision 2, VI-TOPRUP with Revision 3, VI-TOPRUP. The success criterion for VI-TOPRUP has been changed and it is used solely for un-isolated breaks outside containment. The success criteria for this top event requires 3 of 3 GDCS pools and a minimum of 4 of 8 injection lines with at least one line available from each of the 3 pools. The fault tree logic associated with VI-TOPRUP is provided in Table 22.4.6-1 and top 10 cutsets are presented in Table 22.4.6-2.

22.4.6.3.2 GDCS Pool/Injection Line Dependency

Logic was added to correlate the specific GDCS injection lines with their respective GDCS pools as shown below.

- GDCS Pool A - Injection Lines A & E
- GDCS Pool BC – Injection Lines B, C, F & G
- GDCS Pool D – Injection Lines D & H

The previous GDCS model had injection line failures attributing to the failure to discharge of the GDCS pools. In the Rev. 3 GDCS model, additional dependencies were added that provide failure of the GDCS pool due to other causes as a contributing failure to injection line failures.

No additional failure modes were created as part of this model change. No impact to CDF is expected as a result of this model modification.

22.4.6.3.3 Medium LOCA GDCS Line Break

An additional failure mode to account for a break in a GDCS line was added to the injection and equalization functions of the GDCS PRA model. The failure of the line to function as a result of a line break was not accounted for in the previous GDCS model. The initiator data and gates for the medium LOCA GDCS line breaks were already developed and used elsewhere within the PRA model.

For simplification and to facilitate quantification, the initiator was added to a single line for GDCS injection and a single line for GDCS equalization. For GDCS injection, the initiator plus a split fraction to proportion the failure probability amongst the eight injection lines was applied to line A. This was a bounding application of the initiators because injection line A is associated with a GDCS pool with only two injection lines as opposed to the GDCS pool with four injection lines.

A similar approach was applied to the addition of the line break for the equalization line breaks. The equalization line initiator plus split fraction proportioning between the four equalization lines was added to only one of the equalization lines. Because all four equalization lines serve the suppression pool and are symmetric, equalization line A was selected to include the additional failure mode.

In reviewing the results for the GDCS top events shown in Table 22.4.6-2, no impact to CDF was shown as a result of this model modification.

22.4.6.4 Conclusions

The changes to the GDCS showed no impact to the CDF. However, as a result of the addition of the GDCS Pool/Injection Line Dependency model changes, the significance of the equalization function of GDCS has changed. In the revision 2 PRA model, the equalization function was not considered to be risk significant based on its Fussell-Vesely value of less that the importance value of 0.01. With the addition of the dependencies between the pools and the GDCS lines, additional failures from the GDCS injection lines propagated into the equalization function logic to impact the reliability of this function. For the revision 3 PRA model, the Fussell-Vesely value for the GDCS equalization function has changed 0.45, the same value for the GDCS injection function, making this system function risk significant. More details of these results are provided in Section 22.11.

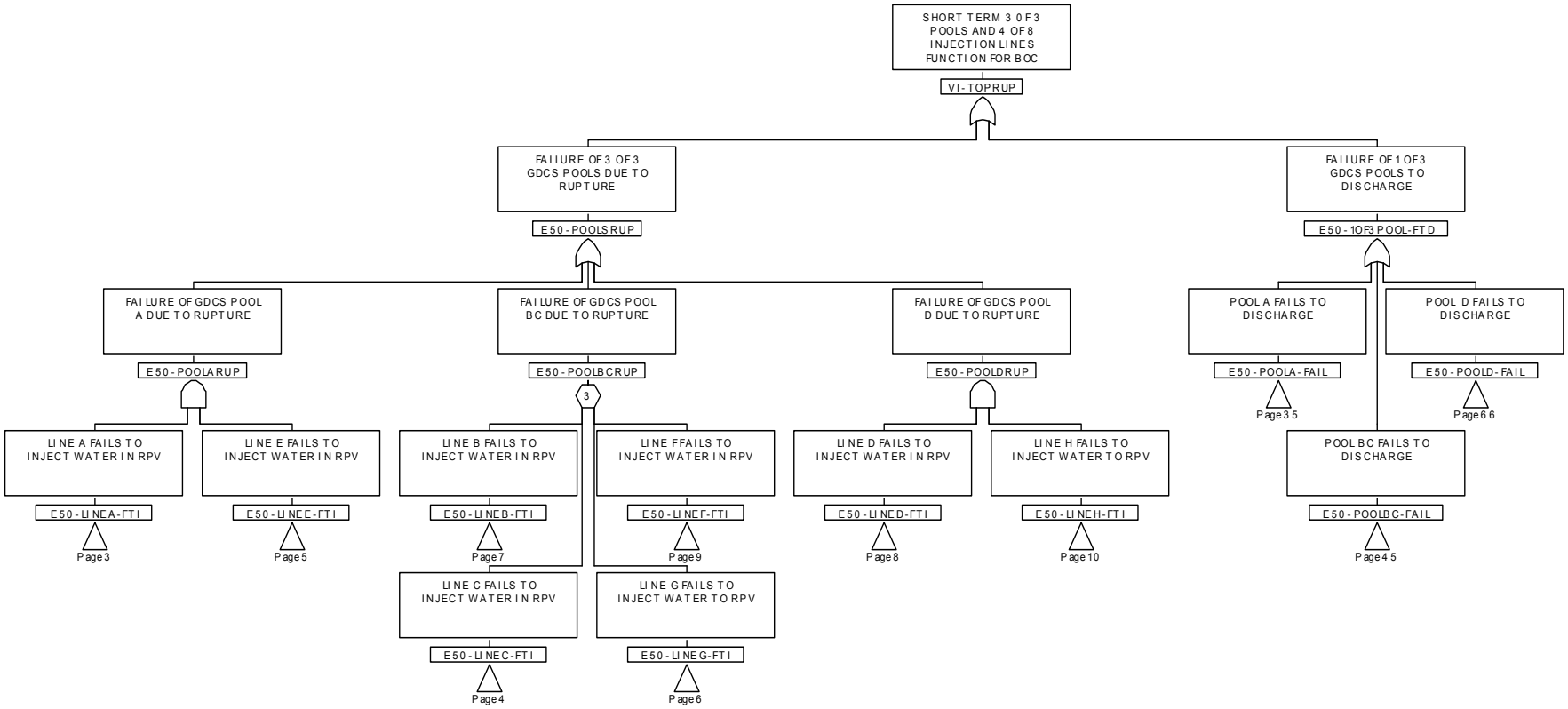

Table 22.4.6-1 Gravity-Driven Cooling System – Top Event VI-TOPRUP

Table 22.4.6-2

Gravity-Driven Cooling System – Cutsets for VI-TOPRUP

Name of Top Gate	E50 Model – Rev. 2 Probability		E50 Model – Rev. 3 Probability	
	with CCF	without CCF	with CCF	without CCF
VE-TOPEQU	4.51E-04	1.79E-11	4.51E-04	1.53E-11
VI-TOPINJ	4.51E-04	2.36E-11	4.51E-04	2.44E-09
VI-TOPRUP	Refer to VI-TOPRVR for value in Rev. 2	Refer to VI-TOPRVR for value in Rev. 2	1.68E-03	1.01E-03
VI-TOPRVR	1.54E-01	1.52E-01	1.54E-01	1.53E-01

VI-TOPRUP (rev. 3) SHORT TERM 3 OF 3 POOLS AND 4 OF 8 INJECTION LINES FUNCTION FOR BOC

Probability	% of Top	Event	Probability	Description
3.06E-04	18.2%	E50-UV_-OC_INJ-F003A	1.75E-02	INJECTION CHECK VALVE F003A FAILS TO REMAIN OPEN OR PLUG
		E50-UV_-OC_INJ-F003E	1.75E-02	INJECTION CHECK VALVE F003E FAILS TO REMAIN OPEN OR PLUG
3.06E-04	18.2%	E50-UV_-OC_INJ-F003D	1.75E-02	INJECTION CHECK VALVE F003D FAILS TO REMAIN OPEN OR PLUG
		E50-UV_-OC_INJ-F003H	1.75E-02	INJECTION CHECK VALVE F003H FAILS TO REMAIN OPEN OR PLUG
3.01E-04	17.9%	E50-UV_-OC-INJ_ALL	3.01E-04	CCF of all components in group 'E50-UV_OC-INJ'
1.50E-04	8.9%	E50-SQV-CC-INJ_ALL	1.50E-04	CCF of all components in group 'E50-SQV-CC-INJ_ALL'
5.25E-05	3.1%	E50-SQV-CC-INJ-F002A	3.00E-04	SQUIB VALVE F002A FAILS TO OPERATE
		E50-UV_-OC-INJ-F003E	1.75E-02	INJECTION CHECK VALVE F003E FAILS TO REMAIN OPEN OR PLUG
5.25E-05	3.1%	E50-SQV-CC-INJ-F002D	3.00E-04	SQUIB VALVE F002D FAILS TO OPERATE
		E50-UV_-OC-INJ-F003H	1.75E-02	INJECTION CHECK VALVE F003H FAILS TO REMAIN OPEN OR PLUG
5.25E-05	3.1%	E50-SQV-CC-INJ-F002E	3.00E-04	SQUIB VALVE F002E FAILS TO OPERATE
		E50-UV_-OC-INJ-F003A	1.75E-02	INJECTION CHECK VALVE F003A FAILS TO REMAIN OPEN OR PLUG
5.25E-05	3.1%	E50-SQV-CC-INJ-F002H	3.00E-04	SQUIB VALVE F002H FAILS TO OPERATE

Probability	% of Top	Event	Probability	Description
		E50-UV_-OC-INJ-F003D	1.75E-02	INJECTION CHECK VALVE F003D FAILS TO REMAIN OPEN OR PLUG
2.38E-05	1.4%	E50-SQV-CC-INJ_1_5	2.38E-05	CCF of two components: E50-SQV-CC-INJ_F002A & E50-SQV-CC-F002E
2.38E-05	1.4%	E50-SQV-CC-INJ_4_8	2.38E-05	CCF of two components: E50-SQV-CC-INJ_F002D & E50-SQV-CC-F002H

22.4.7 Fuel and Auxiliary Pool Cooling System (FAPCS)

22.4.7.1 Overview

The FAPCS fault tree has been updated for Revision 3 to account for both detailed design changes and modeling improvements. This section provides the details of the changes and investigates the risk impact the changes have on both the individual system and the entire PRA model.

22.4.7.2 System Design and PRA Model Changes

22.4.7.2.1 GDCS Equalizing lines for Suppression Pool Cooling (SPC)

GDCS equalizing lines have been added to the logic for the two top events for SPC previously in the model. The gate from GDCS - E50-EQU4OF4-FTI has been added to the logic for both WS-TOPSPC and WS-TOPSPCL. Any one equalization line opening is required to successfully support SPC. Thermal hydraulic analysis shows equalization is required for successful SPC in sequences where maintaining a recirculation loop is required. This change was completed by adding existing GDCS logic to the fault tree for SPC. Figure 22.4.7-1 shows the top of the SPC fault tree with the GDCS equalization transfer event included in the logic.

A new system top was created in the FAPCS fault tree for SPC during ATWS events. This logic was identical the previous revision for SPC. Equalization is not required in ATWS because the RPV remains at high pressure and discharges to the suppression pool through the SRVs.

22.4.7.2.2 Power Dependencies

The previous fault tree for FAPCS only had 480 V power modeled as a dependency. 480V power is needed to support several system functions, but 6.9kV power is also needed for the pumps. Transfers to the 6.9kV power logic have been added to the fault tree.

22.4.7.2.3 Low Pressure Coolant Injection (LPCI) valve changes

The design of the piping from the FAPCS trains to the reactor vessel has changed slightly. The piping section has two new check valves not previously in the design, and for two of the valves already in the model, the valve type has been changed.

Two check valves have been added to the injection path in parallel. These new valves are immediately upstream of two check valves already in the model. The new valves have been added to the fault tree and included in an already existing CCF group.

Valves F332A and F332B were nitrogen motor operated (NMO) valves in the previous design documents and the Revision 2 fault tree. The current DCD shows these as motor operated valves and the system fault tree was updated to account for the change. The failure data and common cause groupings were also updated.

22.4.7.3 Overall Impact on PRA Results

None of the above described model changes have a significant impact on the PRA results of the individual system or the entire integrated PRA model.

Adding the equalizing lines was an analysis driven model change. The risk impact is minor mainly due to the failure rates associated with it. Equalization is an automatic function with a success of any one out of four lines. The failure of equalization is two orders of magnitude lower than the top cutsets for SPC. The model now captures the intersystem dependence of the equalization function, but the quantitative impact is minor.

The impact of the additional power dependency is similar. The model results for FAPCS are generally high due to human actions (operator errors and valve misposition). Loss of power is not a significant contributor to system risk. The model now correctly captures the electric power dependencies, but the quantitative impact is minor.

The LPCI valve changes also have insignificant risk impact. The two check valves added have almost zero numerical impact. The valves are in parallel so failure would require two independent failures or a CCF failure. The piping section already had two other sets of parallel check valves. These new valves were added to the same CCF group. The only risk increase with the new valves is the combination of the two independent failures which is negligible relative the overall system results.

The risk impact of the change in valve type for F332A/B is similarly negligible. Though the failure rate for MOVs is higher than the failure rate for NMOs, this change will essentially have no risk impact to the model. With two valves in parallel it would take two independent failures or a common cause failure for these valves to appear in the cutsets. The two independent failure event likelihood is very low for both valve types. The common cause contribution is essentially already accounted for. There are NMO and MOV common cause groups for the system already. Correcting the valve type for these valves will just change which common cause group the valves are assigned. Events in both groups lead to complete FAPCS failure. Changing the valve type for these valves will not cause a noticeable change to the system results.

22.4.7.4 Conclusion

The FAPCS model has been updated to account for both design update as well as modeling improvements. The results of the model changes are numerically insignificant and all these changes have negligible impact on the overall ESBWR CDF and LRF results.

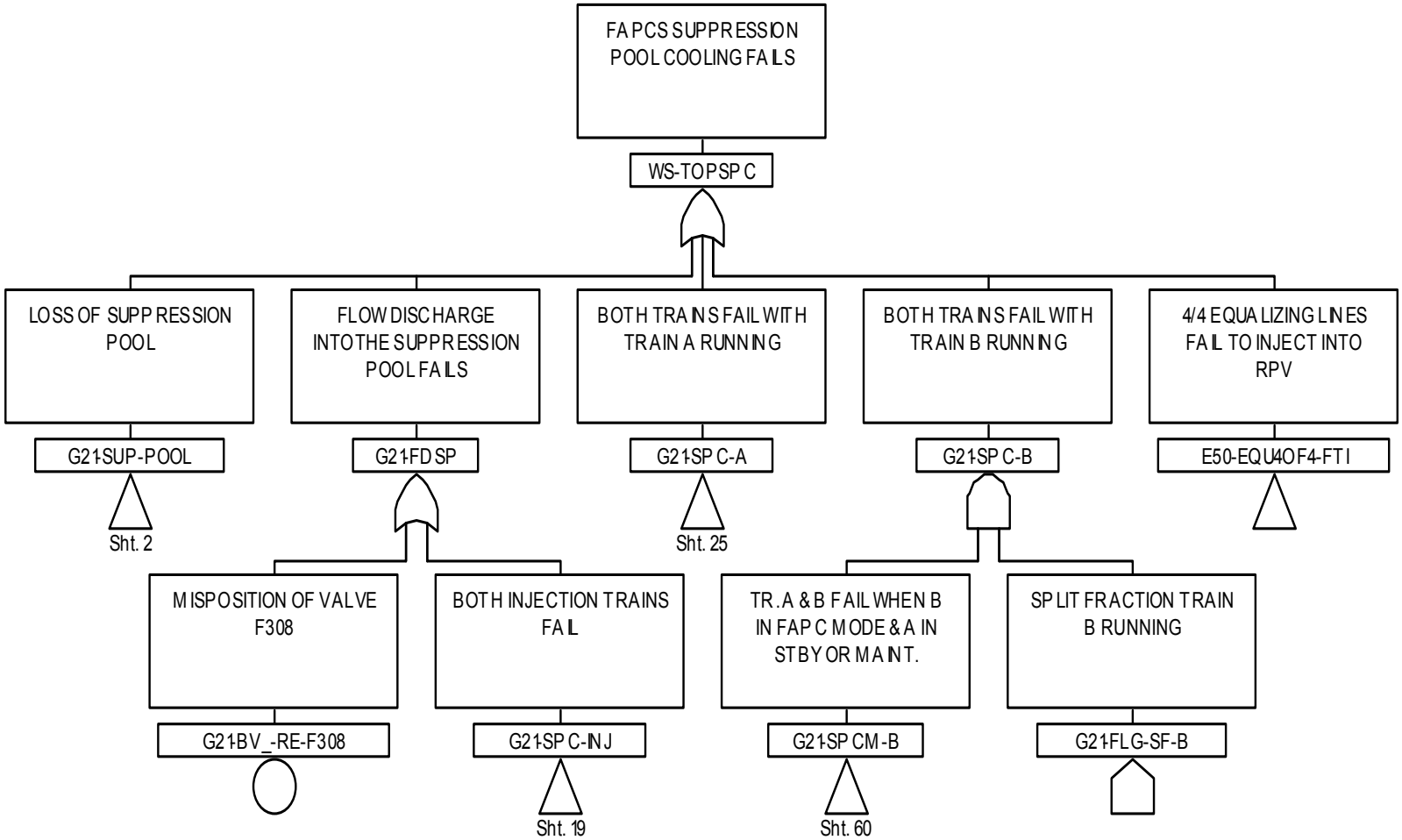

Figure 22.4.7-1 Suppression Pool Cooling Fault Tree top

22.4.8 Reactor Water Cleanup/Shutdown Cooling System

22.4.8.1 Overview

No significant changes to any of the fault tree models for RWCU/SDC have been made between Revision 2 and Revision 3 of the PRA model. There have been a couple design changes that affect the system that have not been added to the PRA model. The sections below describe design changes not incorporated into the PRA model, and the basis for exclusion of each.

22.4.8.2 System Design Changes

22.4.8.2.1 RWCU/SDC Crosstie to FAPCS

A design update to the RWCU/SDC system has added a crosstie connecting it to the FAPCS system. New piping connections between the FAPCS suppression pool suction line to the RWCU/SDC system train A allows for containment cooling, while confining radiation to localized areas of the Reactor Building. The purpose of the crosstie is to provide an alternative means to reduce containment pressure and temperature following a LOCA. The preferred post-LOCA shutdown cooling function is performed by the FAPCS. In the unlikely event that there is fuel damage, the RWCU/SDC system will perform the post-LOCA shutdown cooling function beyond 7 days.

This function is not designed to operate until 7 days or more following an accident. The primary purpose of the design change is to limit the spread of contaminants to a more confined area following an accident with fuel failure. The pipe section is normally isolated and will remain isolated during any transients for the duration of any PRA modeled sequences (24 hours to 72 hours). Since this crosstie only operates during long term recovery from a severe accident, its impact on the PRA model is seen as negligible.

22.4.8.2.2 RWCU/SDC Injection Alignment Change

An update to the design for the main feedwater lines and containment isolation will have a slight impact on RWCU/SDC. Updated design details show a change in piping and valve arrangement of the feedwater lines near the containment boundary. The number and type of valves modeled in the RWCU/SDC system will not change. The design change will have negligible impact on the PRA model. For specific details of the change, see section 22.4.9 (Condensate & Feedwater).

22.4.9 Condensate & Feedwater System (CF&S), Circulating Water System (CIRC), and Turbine Component Cooling Water System (TCCW)

22.4.9.1 Overview

No significant changes to any of the fault tree models described in Section 4.9 have been made between Revision 2 and Revision 3 of the PRA model. The sections below describe the CF&S, CIRC, and TCCW items evaluated for Revision 3 of the ESBWR PRA, including:

- Minor modeling changes to update/enhance the existing model not driven by design changes.
- Design changes not incorporated into the PRA model, and the basis for exclusion of each.

22.4.9.2 System Design and PRA Model Changes

22.4.9.2.1 CIRC Power Dependencies

The CIRW system fault tree in the Revision 2 PRA model did not have electric power dependencies. Transfers to the 13.9kV power logic have been added to the fault tree for the updated model.

22.4.9.2.2 Feedwater Pump Breakers

Design of the main feedwater pump breakers has been changed. The change is in the safety classification of the breakers. Previous design specified that the breakers be 1E Safety-Related components. The revised design allows the breakers to be non-safety-related components. The safety-related function and requirement is being fulfilled by safety-related control power isolation relays.

The pump breakers are included in the fault tree. The safety classification however, does not impact the PRA model. The failure data for breakers is not specific as to the classification, and the failure rate applied to the components is the same for either classification.

22.4.9.2.3 Feedwater Booster Pump Header

The CF&S system design has changed regarding the alignment of the feedwater booster pumps. The original feedwater pump design consisted of four units, each having a single booster pump supplying a single feedwater pump. The updated design has the four feedwater booster pumps supplying a common header that is then accessed by the four feedwater pumps. The updated design has several advantages, including operational flexibility and overall system reliability. This common header alignment provides a reliability advantage in that each booster pump is decoupled from each feedwater pump.

No change to the system fault tree was made due to this design change. The Revision 2 model has each main feedwater pump linked to a dedicated booster and is the more conservative treatment for the system.

22.4.9.2.4 Feedwater Line Isolation Valve Configuration

Design of the feedwater piping and valve configuration near the RPV and containment has been modified. The reasons for the change are:

- To ensure feedwater isolation in the event of a feedwater line break. This change will resolve the containment analysis margin problem created by the lack of effective feedwater isolation in the event of a feedwater line rupture inside containment.
- To enhance the containment isolation response capability of the system.
- To allow both equipment and operator flexibility in transient response.
- To support implementation of the design change removing the safety related breakers for the pumps.

Part of the design change is for the feedwater pump and valve trip logic. The primary goal of the change is to ensure feedwater isolation on breaks inside containment. Having feedwater continue to run following a break inside containment could add mass and energy into the containment such that if power were subsequently lost, the passive systems would not be capable of maintaining containment pressure below the design value. A design challenge was that several scenarios besides feedwater line breaks can provide the same trips signals (low RPV level with high containment pressure). In these other scenarios, feedwater can still provide coolant injection. The updated design change uses a combination of signals including feedwater differential flow, RPV level, and containment level. The updated logic limits feedwater isolation to only those times it is required.

Main Feedwater Lines A and B previously each had a single Motor Operated Valve (MOV), and two check valves, one of which was an air assisted check valve that could be closed. The updated design has a check valve, two MOVs, and then a final check valve. See figure 22.4.9-1 for a simplified diagram showing the old and new configuration. Simply stated, a single MOV was added to each line, and the location of one check valve was changed. The design change was to provide a more effective containment isolation arrangement, and a more effective feedwater isolation for inside containment line breaks. From the PRA model perspective, the new design added a single MOV to each line that already had an MOV and multiple check valves.

Another feature of the design change is the location of the pipe connections for RWCU/SDC, CRD, FAPCS, and FPS. A single connection on each feedwater line allows injection from these systems. FAPCS, FPS, and train B of RWCU/SDC are connected to feedwater line A. The other train of RWCU/SDC and CRD are connected to feedwater line B. The previous design had the connection upstream of the two check valves (see figure 22.4.9-1). The new design has the connection upstream of only a single check valve, but added a check valve to the connecting line right near the connection point to the main feedwater lines. The net result is that the number of valves and valve types that need to function to support these systems has not changed at all. The number of valves that can lead to failure of all systems has been reduced to one on each line.

22.4.9.3 Overall Impact on PRA Results

Of the above noted changes, only the power dependencies to the CIRC system have actually been included in the Revision 3 PRA model. The others are either conservative as modeled in Revision 2, or will have limited impact on the model.

The impact of the additional power dependency is very small. CCF of the pumps or intake racks dominates the model results for CIRC system. The first cutsets with the power dependency, even with high screening values in the individual model evaluation, are three to four orders of magnitude below the CCF events. Loss of power is not a significant contributor to system risk. The model now correctly captures the electric power dependencies, but the quantitative impact is minor.

The feedwater pump breaker classification change will have no impact on the PRA model. The data source used for breaker failure rates (Reference 5-1) does not distinguish between various safety classifications. No change the PRA model is necessary for this design change.

The feedwater booster pump alignment change has not been included in the CF&S fault tree for Revision 3. One of the fundamental reasons for splitting the feedwater and booster pumps is to add operational flexibility. The old design had the feedwater and booster pumps operating as a single unit, each with a single, discrete suction pipe and a single discharge to a common feedwater header. Failure of the breaker, motor, feedwater pump, booster pump, or speed controller would result in the affected unit being unavailable. While the design is for four units with only three being required for operating at rated conditions, it potentially presented challenges to operation. The updated system configuration provides a common header that the booster pumps would discharge into. Thus, the feedwater pumps would take suction from this header and not be restricted to a single supply source. Any three of the four booster pumps could feed any three of the four feedwater pumps, regardless which pumps are available for service. The overall effect on operations is a substantial improvement in flexibility and reliability with regard to operating conditions with one or more components out of service. The Revision 2 fault tree modeling the previous design alignment is conservative.

Changing the configuration of the feedwater line valves in the fault tree to match the design change would have a negligible impact on the PRA results. For the feedwater system model, the change would add an 'MOV fails to remain open' basic event to each of the feedwater lines. The two lines are in an AND gate, as only one injection path is needed for success of the PRA function modeled. The basic event value for an MOV failing to remain open is 3.36E-6 (with 24 hour mission time). Given the low failure probability, the passive nature of the failure mode, and the fact that two feedwater lines are available and only one is required, this change in the design has a negligible impact on the PRA results for the CF&S system.

Other systems impacted by the valve configuration change are not quantitatively impacted by the design change. The feedwater piping is also used by FAPCS, FPS, CRD, and RWCU/SDC as a flow path to the RPV. None of these systems are significantly impacted by the change. Comparison of the old and new alignment shows that the fault tree models for these systems would not change. The same number and type of valves are needed to successfully function in all the listed models. The move of one check valve upstream of the MOVs in each feedwater line combined with the addition of a check valve in the connecting RWCU/SDC line corresponds to no change in the fault tree logic. The only differences would be a slight risk reduction as only

one valve on each feedwater line can disable all flow to the RPV, the check valve downstream of the RWCU/SDC connection.

22.4.9.4 Conclusion

A minor change has been made to add power dependencies to the CIRC system. The risk impact for the update is minor for the system and negligible for the integrated ESBWR PRA model.

The CF&S system has had several design changes but none of them have been included in the Revision 3 PRA model. Analysis of each change shows that the risk impact is either minor, or the Revision 2 model treatment is more conservative.

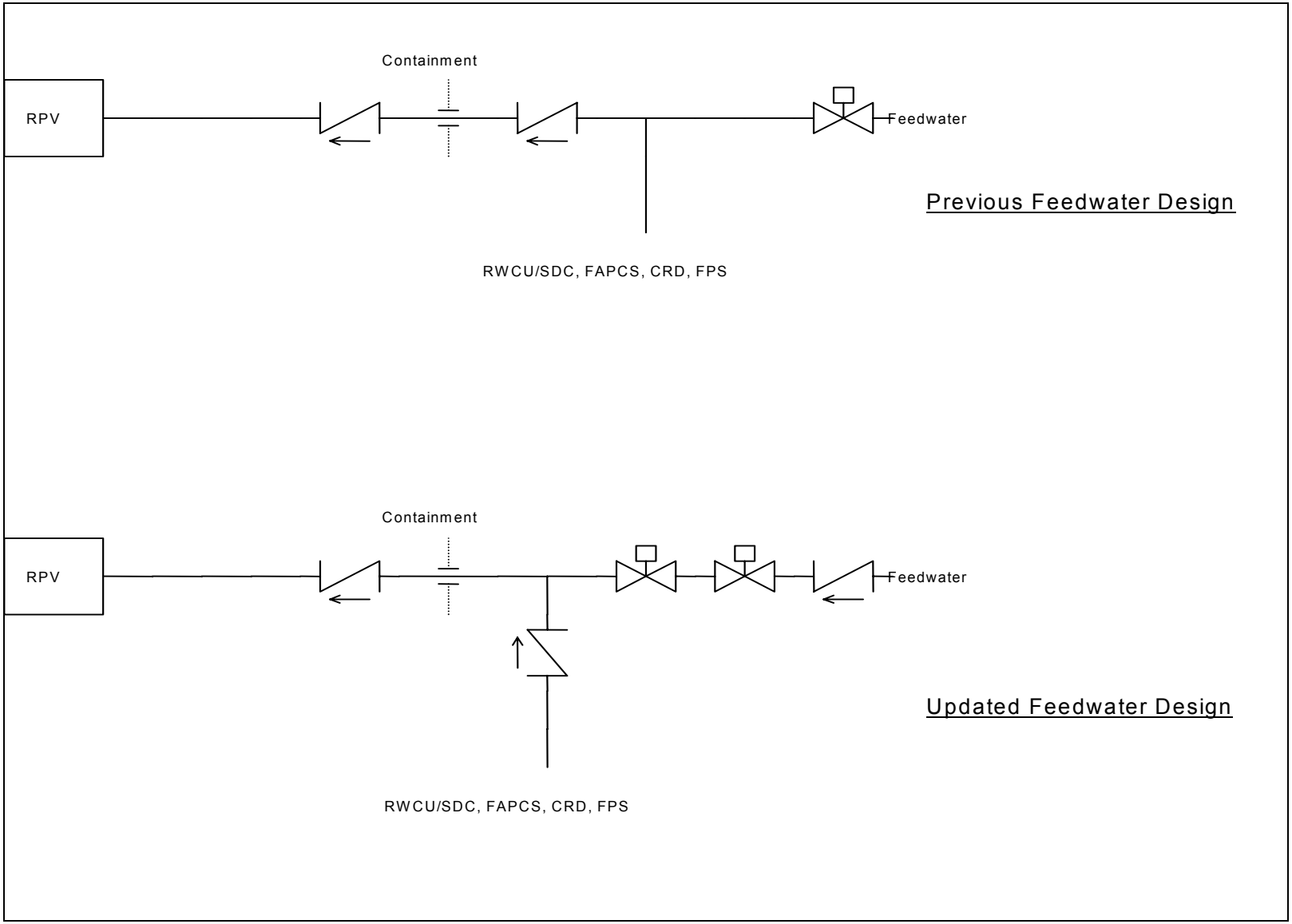

Figure 22.4.9-1 Feedwater Isolation Valve Configuration

22.4.10 Reactor Component Cooling Water System (P21)

22.4.10.1 Overview

This section documents changes to the Reactor Component Cooling Water (RCCW) system model provided in the previous revision of the PRA. The RCCW system fault tree has been updated to account for a design change.

The design change that impacts the system model is the removal of three of the five crosstie lines and valves between the trains. This change does not have a significant effect on the overall PRA results.

22.4.10.2 System Changes

22.4.10.2.1 Change In Number of Crosstie Lines

Since the last PRA revision, two of the five crosstie lines and valves between the parallel trains have been removed from design documents. The crosstie lines containing valves P21-F0007 and P21-F0020, as shown in Figure 4.10.1, are removed from the current model. It is important to note that three crosstie lines and valves remain, so the crosstie function has not been lost.

In the previous model, there were five crosstie valves modeled under an OR gate for RCCW Pump crosstie failures. Failure modes were failure to close and failure to remain closed. These five valves were all part of a CCF group. Nothing was changed in the fault tree except that two of the five valves were removed as basic events and were removed from the CCF groups as well. The fault tree logic for the remaining crosstie valves was not changed.

22.4.10.3 Results Impact

There is virtually no difference in the cutsets, but the removal of valves P21-F0007 and F0020 from the model does result in a slight decrease in the RCCW system failure probability. This decreased system failure probability, however, does not translate into a significant effect on CDF or LRF.

22.4.10.4 Conclusions

The changes to the RCCW system model do not represent a significant change from that presented in the previous revision, nor do they have a significant effect on the overall PRA results.

22.4.11 Plant Service Water System (P41)

22.4.11.1 Overview

There are no changes to the Plant Service Water (PSW) system design that impact the Revision 2 PRA system model. The fault tree model for Revision 3 is nearly identical to the Revision 2 model.

Only one change was made to the model. The change was not due to a design change, but was made to correctly link the electric power dependencies. Revision 2 had cooling tower power dependencies reversed (i.e. Division B AC power tied to cooling tower A) in the model. The Revision 3 logic has been updated to correctly capture the electric power dependencies. This change has a negligible impact on the overall ESBWR PRA results.

22.4.12 Instrument Air System and Service Air System – (IAS, SAS) (P52, P51)

22.4.12.1 Overview

Several changes have occurred in the design of the Instrument Air System (IAS) and the Service Air System (SAS) since Rev 2 of PRA.

The most significant change is the removal of the IAS compressors and the reconfiguration of four (4) identical 100% capacity compressors in the SAS in support of the IAS.

Additionally, various piping and valve lineups of the two systems and supporting systems to the IAS and the SAS were redesigned as a result of the compressor design change. For instance, RCCW is now the cooling support to the SAS compressors, though a secondary cooling source can be manually aligned if RCCW fails. The fundamental function and usage applications of the two systems has not changed.

PRA system modeling of the two systems is changed to reflect the latest system configuration.

22.4.12.2 Modeling Changes

22.4.12.2.1 Modeling Assumptions

Due to the configuration change of these systems, PRA system modeling incorporated various assumptions depending on the availability of the system design information, system operating strategy, system maintenance practice and modeling preference. The overall intent of these assumptions is to supplement certain information until detailed design and as-built plant procedures become available. The impact of these modeling assumptions for the IAS and SAS systems are expected to be minimal and non-significant to the overall PRA results.

With respect to the updated design of the Instrument Air and the Service Air systems, the PRA system model incorporated the following assumptions:

(1) IAS success requires one of two IAS dryer trains supplied by one of two SAS compressors of one of the two SAS trains.

(2) All four SAS compressors are identical with 100% capacities each.

(3) Of the two SAS compressor trains, two compressors are on each train. Compressor A and C are on one train, compressor B and D are on the other train.

(4) Applicable valve and compressor common cause modeling parameters assumed.

(5) IAS dryers are 100% capacity and one IAS dryer train is primary, the second dryer train provides full backup and auto starts on high DP across a filter, low discharge pressure or high outlet dewpoint.

(6) SAS compressors can also supply IAS users via IAS bypass line given IAS dryer trains failure. SAS supply to IAS dryer bypass line is modeled under the IAS system.

(7) All auto or remotely actuated AOVs fail in a position to keep IAS operational and controllable.

(8) Permanently installed pressure and temperature instrumentation provide MCR pressure and temperature indication and alarm.

(9) Standby SAS compressor auto starts on IAS receiver low-pressure supply. When IAS receiver pressure drops to low-low set point, SAS distribution isolation valve closes to restrict flow to SAS users.

(10) Given auto control signal failure, certain manual (operator) actions, such as for AOVs, are assumed.

(11) TCCW cooling is no longer required. RCCW cooling is required for SAS compressors; backup cooling is available via operator action if RCCW fails.

(12) All four compressors are modeled with generic data. Individual compressor component reliability data, such as that of intercooler or aftercooler, is included in the generic compressor data.

22.4.12.2.2 System dependency and transfers

The Rev 2 PRA IAS and SAS system dependency and transfers are replaced with the ones listed in Tables 22.4.12-1a and 1b. New IAS and SAS design configuration required updated power, cooling and control system support. The change to the IAS and SAS system dependency modeling is expected to not have significant impact to either the IAS and SAS systems risk importance or to the overall PRA result.

22.4.12.2.3 Common Cause Failures

Common cause modeling was revised based on the new IAS and SAS design configuration. Table 22.4.12-2 shows the latest common cause events modeled. No significant system importance impact to the overall PRA results is expected as a result of the modified system common cause modeling. Section 22.5.3, Common Cause section, will review the overall Rev 3 PRA common cause impacts.

22.4.12.2.4 Human Interaction

New operator actions modeled in the IAS and SAS system are summarized in Table 22.4.12-3. Section 22.6 documents the basis for these new operator actions.

22.4.12.2.5 System Diagram

The revised design configuration of the IAS and SAS system modeled in the PRA is shown in Figure 22.4.12-1, simplified diagram of IAS and SAS**.**

22.4.12.3 PRA Insights

A comparison study was conducted to compare Rev 2 of the PRA (with the old P51 and P52 model) with the updated P52 and P51 system model. At a quantification truncation of 1E-13, the internal CDF is 1.066E-8/yr with this updated system model, which is identical to the CDF prior to the IAS and SAS systems model update in the Rev 2 PRA model.

The highest CDF cutset contribution of IAS or SAS is at 4.68E-12/yr from a %T-IORV sequence due to a SAS operator action. Prior to the IAS and SAS model change; the highest CDF cutset contribution of IAS or SAS was also at 4.68E-12/yr from a %T-IORV sequence due to a different SAS operator action contribution.

Overall, the changes made to the IAS and SAS system models did not change the two systems CDF contribution relative to the existing PRA model. It is also expected that the overall PRA results, insights and conclusions will not be impacted by the changes described above.

Section 22.11 of NEDO-33201, which incorporates changes and model updates of all the PRA systems, presents system contributions, including contributions from IAS and SAS, to CDF, determined by various risk importance measures.

Table 22.4.12-1a

IAS/SAS - System Dependencies

SUPPORT SYSTEM											
		POWER SYSTEM				COOLING SYSTEM		CONTROL SYSTEM			
		LVD		MVD		RCCWS		N-DCIS			
COMPONENT	TYPE	R12-TB1-A	R12-TB1-B	R11-1000A3	R11-1000B3	P21-0001-_1A	P21-0001-_1B	C62-P52-ACV-ABV0002A	C62-P52-ACV-ABV0002B	C62-P51-CMP-C001A	C62-P51-CMP-C001B
P52-DRY-0001-A	DRYER	X									
P52-DRY-0001-B	DRYER		X								
P51-CMP-0001-A	CMP			X		X				X	
P51-CMP-0001-B	CMP				X		X				X
P51-CMP-0001-C	CMP			X		X				X	
P51-CMP-0001-D	CMP				X		X				X
P52-ACV-0001-A	AOV							X			
P52-ACV-0001-B	AOV								X		

Table 22.4.12-1b

IAS/SAS - Transfers

The following transfer gates are used in the fault tree to reflect system dependencies.

Transfer	Description
IAS TRANSFERS	
C62-P52-ACV-ABV0002A	C62 AOV SIGNAL AND POWER CONTROL LOGIC.
C62-P52-ACV-ABV0002B	C62 AOV SIGNAL AND POWER CONTROL LOGIC.
R12-TB1-A	TURBINE BLDG POWER CENTER 1-A
R12-TB1-B	TURBINE BLDG POWER CENTER 1-B.
SAS TRANSFERS	
C62-P51-CMP-C001A	C62 Compressor Control Signal and Control Power
C62-P51-CMP-C001B	C62 Compressor Control Signal and Control Power
C62-P51-CMP-C001C	C62 Compressor Control Signal and Control Power
C62-P51-CMP-C001D	C62 Compressor Control Signal and Control Power
P21-0001-_1A	RCCW Component Cooling
P21-0001-_1B	RCCW Component Cooling
R11-1000A3	R11 Motive Power
R11-1000B3	R11 Motive Power

Table 22.4.12-2

IAS/SAS - Common Cause Failures

Basic Event	Probability	Description
P52-UV_-OC-CCF_1_2	1.71E-09	CCF of two components: P52-UV_-OC-0002-A & P52-UV_-OC-0002-B
P52-UV_-OC-CCF_1_2_3	1.35E-08	CCF of three components: P52-UV_-OC-0002-A & P52-UV_-OC-0002-B & P52-UV_-OC-000
P52-UV_-OC-CCF_1_2_4	1.35E-08	CCF of three components: P52-UV_-OC-0002-A & P52-UV_-OC-0002-B & P52-UV_-OC-000
P52-UV_-OC-CCF_1_3	1.71E-09	CCF of two components: P52-UV_-OC-0002-A & P52-UV_-OC-0006-A
P52-UV_-OC-CCF_1_3_4	1.35E-08	CCF of three components: P52-UV_-OC-0002-A & P52-UV_-OC-0006-A & P52-UV_-OC-000
P52-UV_-OC-CCF_1_4	1.71E-09	CCF of two components: P52-UV_-OC-0002-A & P52-UV_-OC-0006-B
P52-UV_-OC-CCF_2_3	1.71E-09	CCF of two components: P52-UV_-OC-0002-B & P52-UV_-OC-0006-A
P52-UV_-OC-CCF_2_3_4	1.35E-08	CCF of three components: P52-UV_-OC-0002-B & P52-UV_-OC-0006-A & P52-UV_-OC-000
P52-UV_-OC-CCF_2_4	1.71E-09	CCF of two components: P52-UV_-OC-0002-B & P52-UV_-OC-0006-B
P52-UV_-OC-CCF_3_4	1.71E-09	CCF of two components: P52-UV_-OC-0006-A & P52-UV_-OC-0006-B
P52-UV_-OC-CCF_ALL	8.24E-08	CCF of all components in group 'P52-UV_-OC-CCF'
P51-UV_-CC-CCF_1_2	3.56E-08	CCF of two components: P51-UV_-CC-0001-A & P51-UV_-CC-0001-B
P51-UV_-CC-CCF_1_2_3	2.82E-07	CCF of three components: P51-UV_-CC-0001-A & P51-UV_-CC-0001-B & P51-UV_-CC-000
P51-UV_-CC-CCF_1_2_4	2.82E-07	CCF of three components: P51-UV_-CC-0001-A & P51-UV_-CC-0001-B & P51-UV_-CC-000
P51-UV_-CC-CCF_1_3	3.56E-08	CCF of two components: P51-UV_-CC-0001-A & P51-UV_-CC-0001-C
P51-UV_-CC-CCF_1_3_4	2.82E-07	CCF of three components: P51-UV_-CC-0001-A & P51-UV_-CC-0001-C & P51-UV_-CC-000
P51-UV_-CC-CCF_1_4	3.56E-08	CCF of two components: P51-UV_-CC-0001-A & P51-UV_-CC-0001-D
P51-UV_-CC-CCF_2_3	3.56E-08	CCF of two components: P51-UV_-CC-0001-B & P51-UV_-CC-0001-C

Table 22.4.12-2

IAS/SAS - Common Cause Failures

Basic Event	Probability	Description
P51-UV_-CC-CCF_2_3_4	2.82E-07	CCF of three components: P51-UV_-CC-0001-B & P51-UV_-CC-0001-C & P51-UV_-CC-000
P51-UV_-CC-CCF_2_4	3.56E-08	CCF of two components: P51-UV_-CC-0001-B & P51-UV_-CC-0001-D
P51-UV_-CC-CCF_3_4	3.56E-08	CCF of two components: P51-UV_-CC-0001-C & P51-UV_-CC-0001-D
P51-UV_-CC-CCF_ALL	1.72E-06	CCF of all components in group 'P51-UV_-CC-CCF'

Table 22.4.12-3
IAS/SAS - Human Error Events

Basic Event	Probability	Description
P52-XHE-CC-1001-B	1.77E-02	OPERATOR FAILS TO OPEN STANDBY TRAIN AOV 0001-B
P52-XHE-FC-BV-0007	1.77E-02	OPERATOR FAILS TO ISOLATE MANUAL VALVE
P51-XHE-FO-0001-CD	1.77E-02	OPERATOR FAILS TO ALIGN ONE BACKUP CMP TO STANDBY
P51-XHE-P21-BU	1.77E-02	OPERATOR ACTION TO CONNECT ALTERNATE COOLING GIVEN RCCW FAILED
P51-CMP-RE-0001-B	8.07E-03	SERVICE AIR SYSTEM COMPRESSOR RESTORATION ERROR
P51-CMP-RE-0001-C	8.07E-03	SERVICE AIR SYSTEM COMPRESSOR RESTORATION ERROR
P51-CMP-RE-0001-D	8.07E-03	SERVICE AIR SYSTEM COMPRESSOR RESTORATION ERROR

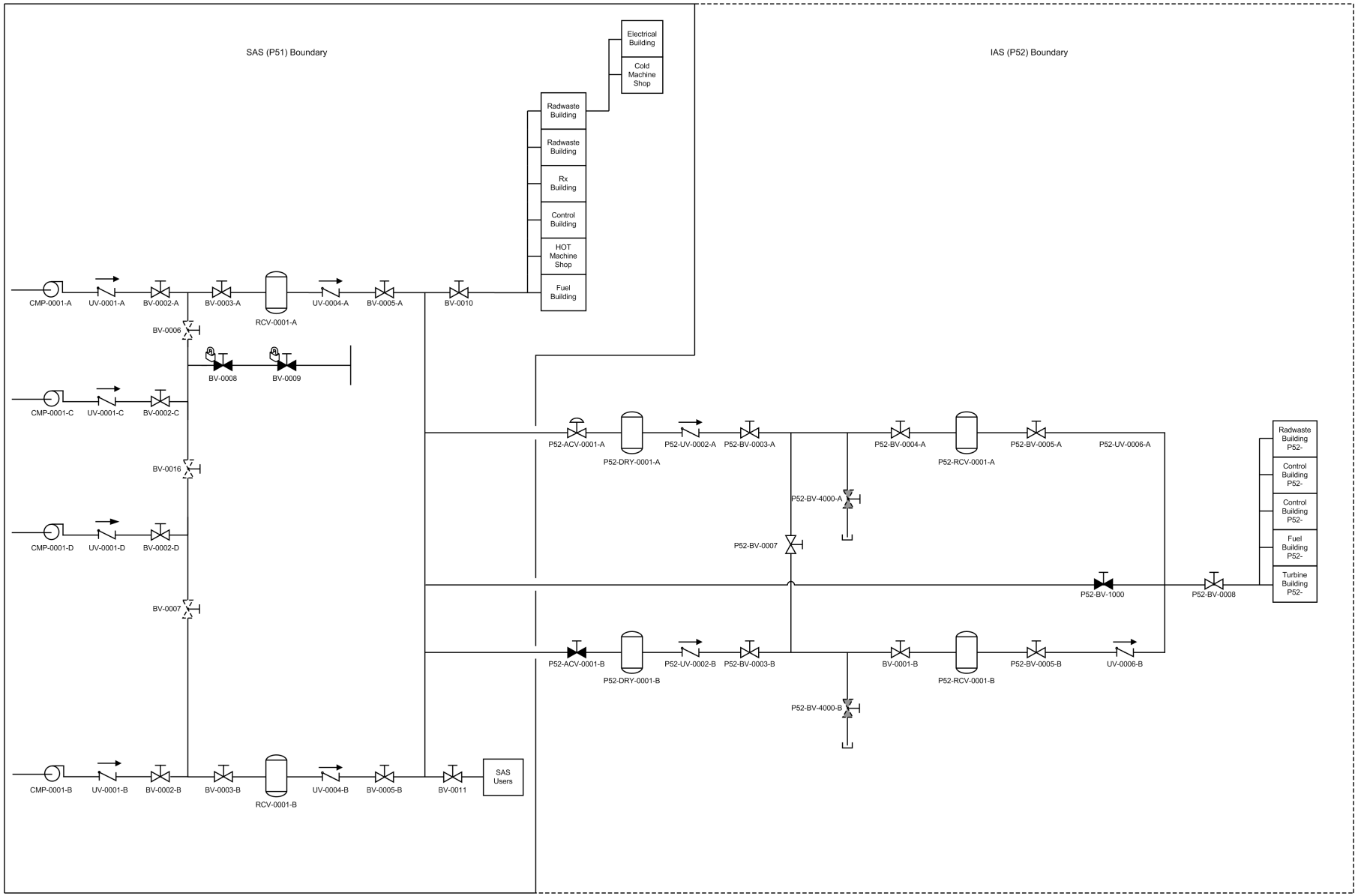

Figure 4.12-1. Simplified Diagram of IAS and SA

22.4.13 High Pressure Nitrogen Supply System (HPNSS)- (P54)

22.4.13.1 Overview

Overall, the function, operation and configuration of the HPNSS system were not changed.

PRA modeling of this system was modified in a few places to reflect updated modeling preferences.

22.4.13.2 Modeling Changes

22.4.13.2.1 Modeling Assumptions

No major changes were made to the assumptions section.

22.4.13.2.2 System Dependency and Transfers

As a result of modeling preference, system dependencies and transfers were revised in Rev 3 of the HPNSS PRA model.

Power dependencies and control logic dependencies for the air-operated valves were revised. Tables 22.4.13-1a and 1b show the new dependencies and the transfer gates for the system model. The risk importance of these changes is expected to be minimal and no PRA results impact is expected.

22.4.13.2.3 Common Cause Failures

Common cause modeling was modified due to modeling preference. Table 22.4.13-2 shows the latest common cause events modeled. No significant system importance impact is expected due to the modified system common cause modeling. Section 22.5.3, Common Cause section, will review the overall Rev 3 PRA common cause impacts.

22.4.13.2.4 Human Interaction

No new operator actions are added to the model and some of the HPNSS operator action credits in Rev 2 of the PRA were eliminated from the Rev 3 system model due to system modeling preference. The remaining operator action is shown in Table 22.4.13-3.

22.4.13.2.5 Special Events

The following special event was used in the fault tree: T31-P54-SUPPLY, CIS SYSTEM NORMAL NITROGEN SUPPLY.

22.4.13.2.6 System Diagram

The normally closed maintenance valve on the low-pressure nitrogen supply line is renamed as BV-F708 as shown on Figure 22.4.13-1, Simplified Diagram of HPNSS.

22.4.13.3 Conclusion

A comparison study was conducted to compare with Rev 2 of PRA model with this updated P54 system model. At a quantification truncation of 1E-13, the internal events CDF is 1.066E-8/yr

with this updated system model, which is identical to the CDF prior to the HPNSS systems model update in the Rev 2 PRA model.

Overall, the changes made to the HPNSS system models did not change the system CDF contribution relative to the existing PRA model. It is also expected that the overall PRA results, insights and conclusions will not be impacted by the changes described above.

Section 22.11 of NEDO-33201, which incorporates changes and model updates of all the Rev 3 PRA systems, presents system contributions, including contributions from HPNSS, to CDF, determined by various risk importance measures.

Table 22.4.13-1a
HPNSS - System Dependencies

SUPPORT SYSTEM							
		POWER SYSTEM				AIR	CONTROL SYSTEM
		DIV II SR UPS		DIV IV SR UPS		IAS	N-DCIS
COMPONENT	TYPE	R13-21-RB	R13-22-RB	R13-41-RB	R13-42-RB	P52-0001-_1	C62-P54-F014
P54-ACV-F003	AOV					X	
P54-ACV-F009 (1)	AOV	X	X	X	X	X	
P54-ACV-F014	AOV					X	X
P54-ACV-F026 (1)	AOV	X	X	X	X	X	

Note (1): Safety related isolation valves.

Table 22.4.13-1b

HPNSS - Transfers

The following transfer gates are used in the fault tree to reflect system dependencies.

Transfer	Description
P52-0001-_1	Loss of Instrument Air
R13-21-RB	LOSS OF SR 120VAC UPS FROM BUS R13-21 FOR RX BLDG
R13-22-RB	LOSS OF SR 120VAC UPS FROM BUS R13-22 FOR RX BLDG
R13-41-RB	LOSS OF SR 120VAC UPS FROM BUS R13-41 FOR RX BLDG
R13-42-RB	LOSS OF SR 120VAC UPS FROM BUS R13-42 FOR RX BLDG
C62-P54-F014	AOV control failure

Table 22.4.13-2
HPNSS - Common Cause Failures

Basic Event	Probability	Description
P54-UV_-CC-CCF_1_2_3	2.28E-06	CCF of three components: P54-UV_-CC-F010 & P54-UV_-CC-F025 & P54-UV_-CC-F027
P54-BV_-OC-CCF1128_1_2	3.79E-08	CCF of two components: P54-BV_-OC-F011 & P54-BV_-OC-F028
P54-CPV-OC-CCF_1_2	2.93E-06	CCF of two components: P54-CPV-OC-F005 & P54-CPV-OC-F016
P54-UV_-CC-CCF_1_2	2.50E-07	CCF of two components: P54-UV_-CC-F010 & P54-UV_-CC-F025
P54-UV_-CC-CCF_1_3	2.50E-07	CCF of two components: P54-UV_-CC-F010 & P54-UV_-CC-F027
P54-UV_-CC-CCF_2_3	2.50E-07	CCF of two components: P54-UV_-CC-F025 & P54-UV_-CC-F027
P54-UV_-OC-CCF_1_2	1.43E-07	CCF of two components: P54-UV_-OC-F012A & P54-UV_-OC-F012B

Table 22.4.13-3
HPNSS - Human Error Events

Basic Event	Probability	Description
P54-BV_-RE-F013A	3.00E-02	RESTORATION ERROR OF F013A

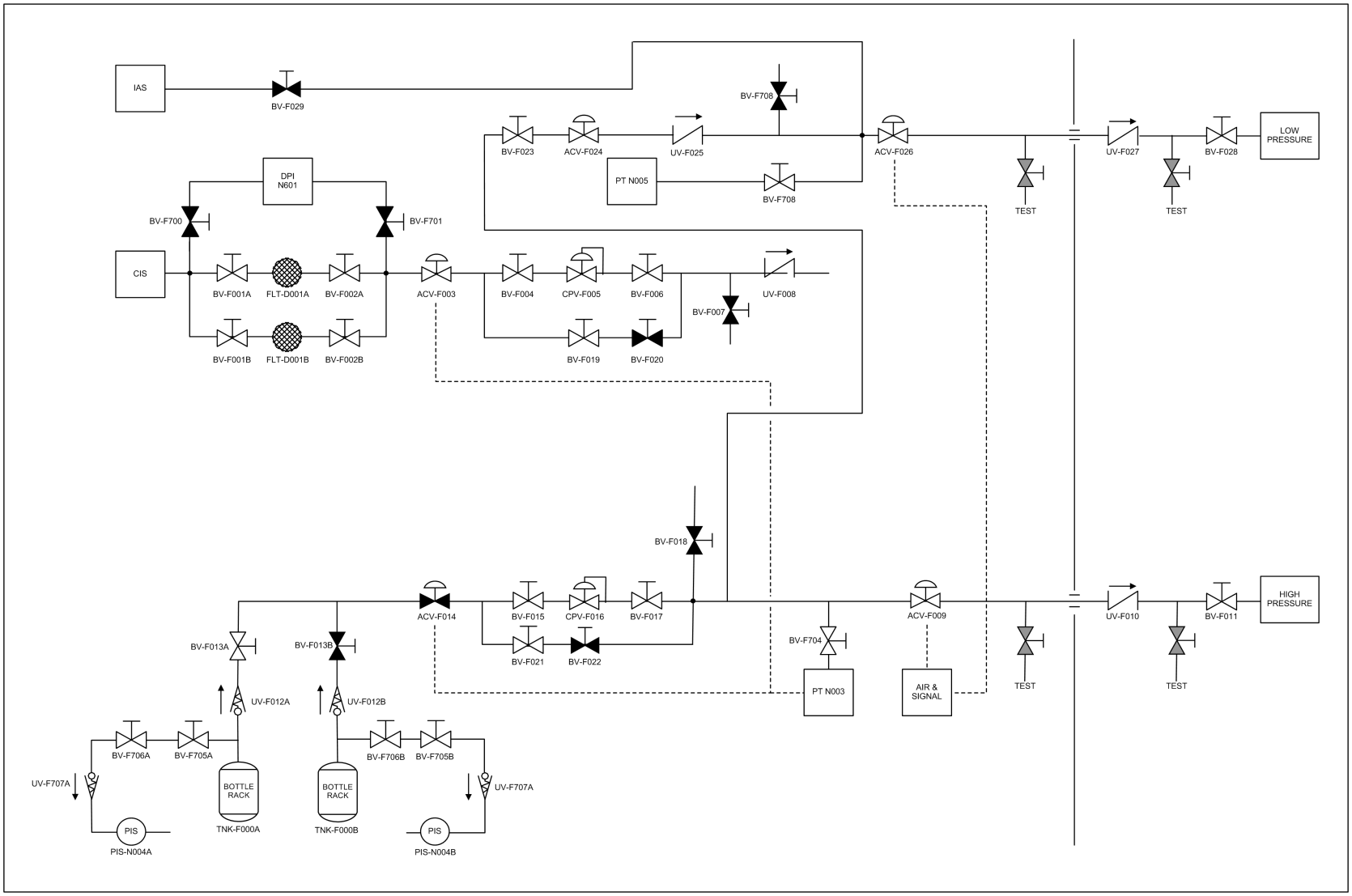

Figure 22.4.13-1. Simplified Diagram of HPNSS

22.4.14 AC Electric Power System

This section covers the following systems: Electric Power Distribution System (R10), Medium Voltage Distribution System (R11), Low Voltage Distribution System (R12), Standby On-Site AC Power Supply System (R21), and the ancillary diesel generators (modeled under R21).

22.4.14.1 Overview

In DCD Revision 5 Section 8, there are minor design changes that impact PRA AC power system models except for the new ancillary diesel generators. The ancillary diesel generators (ADGs) are added for diverse on-site AC power supplies from the offsite power and standby diesel generators. The ancillary diesel generators are part of design enhancement to ensure the long-term AC power availability in the station blackout scenarios (i.e., a loss of offsite power concurrent with a loss of both standby diesel generators). The PRA AC power system models are updated along with the UPS (R13) and the DCIS system models.

22.4.14.2 System Design and PRA Model Changes

22.4.14.2.1 Electric Power Distribution System (R10) Change

There is no design change in the electric power distribution system (R10) that requires a PRA system model update.

22.4.14.2.2 Medium Voltage Distribution System (R11) Change

There is no design change in the medium voltage distribution system (R11) that requires a PRA system model update. However, the following system model changes have been implemented based on the design engineer's comments on PRA model assumptions and the PRA results from the previous revision:

- Synchronizing relay failures are deleted because they will not contribute to the bus failures under the PRA modeled situations. Their associated CCF group is also deleted.
- A new CCF group is added for PIP bus failures because of the relatively high importance of the PIP buses although normally bus failures are not modeled with CCF. A new CCF group "R11-BAC-LP-PIP" is defined for basic events R11-BAC-LP-100A3 and R11-BAC-LP-100B3.

22.4.14.2.3 Low Voltage Distribution System (R12) Change

There is no design change in the low voltage distribution system (R12) that requires a PRA system model update. However, the following system model changes have been implemented based on the design engineer's comments on PRA model assumptions and the PRA results from the previous revision:

- To incorporate design engineer's comments on the PRA assumptions on the low voltage distribution system, the assumptions on switchgear control powers are modified. Assumptions 14 and 15 in Section 4.14 stated, "If the circuit breaker is normally closed and required to remain closed, the loss of control power has no effect." For conservatism, this statement has been changed to "The loss of control power would result in the opening of all feeder breakers on the subject buses to protect the sources." As a

result, the loss of 125 VDC switchgear control power from both A3 and B3 will result in the failure of the R12 buses. For the isolation power centers, the loss of the divisional uninterruptible power supply bus that controls the feeder breakers will result in the failure of the isolation power centers.

- Synchronizing relay failures are deleted because they will not contribute to the bus failures under the PRA modeled situations. Their associated CCF group is also deleted.

22.4.14.2.4 Standby On-Site AC Power System (R21) Change

There is no design change for the standby diesel generators that requires a PRA system model update. However, the following system model changes have been implemented based on the design engineer's comments on PRA model assumptions and the PRA results from the previous revision:

- It is assumed that the normally running diesel generator room ventilation system will be disrupted after a loss of preferred power. Therefore, the restart failure of the normally running ventilation system has been added.
- Based on DCD Tier 2 Figure 9.4-12, there are 6 roof-mounted fans for the supplemental ventilation system for each standby diesel generator room. These 6 fans are rated 20% each. Therefore, the success criterion for the supplemental ventilation system is 5 out of 6 fans. In the Revision 2 system model, any single failure of these roof-mounted fans would result in the failure of the supplemental ventilation system, which is more limiting. As a result, the standby diesel generator room supplemental ventilation system failures have been modified to model the failures from any 2 out of 6 roof-mounted fans.

Two nonsafety-related ancillary diesel generators have been designed to provide additional independent sources of onsite AC power. DCD Tier 2 Section 8.3.1.1.9 and Figure 8.3-3 describe the ancillary diesel generators. Although the ancillary diesel generators are totally independent of the standby diesel generators, they are included in the R21 PRA system model for convenience.

The following are R21 system model changes associated with the ancillary diesel generators:

- Two new system tops R21-ANCILLARYA & R21-ANCILLARYB have been added:
  - (1) R21-ANCILLARYA: LOSS OF THE ANCILLARY DIESEL BUS A
  - (2) R21-ANCILLARYB: LOSS OF THE ANCILLARY DIESEL BUS B
- A list of assumptions for ancillary diesel generators are included as follows:
  - (1) It is assumed that the ancillary diesel buses are normally energized and are aligned to the PIP buses. After a loss of all AC power (i.e., loss of offsite power and all standby diesel generators), the undervoltage relays are assumed to automatically start the ancillary diesel.
  - (2) It is assumed that the failure to open the breakers connecting the ancillary bus to PIP bus would result in the failure of ancillary diesel bus.
  - (3) It is assumed that the ancillary diesel generators are controlled by the protecting relays, whose failures would fail the ancillary diesel generator.

(4) It is assumed that the ancillary diesel generator DC control power is included in the diesel generator boundary. Therefore, the ancillary diesel generator has no dependency on the 125 VDC control powers in the DC power system.

(5) It is assumed that the ancillary diesel generators are self-cooled.

(6) It is assumed that operators can manually start the ancillary diesel generators after the protective relay failures, which is not modeled for conservatism.

(7) It is assumed that the ancillary diesel generator buses (including the supporting ancillary diesel generator) cannot be taken out of service for test and maintenance at the same time. The data for non-safety system component in test or maintenance is assumed for both the ancillary diesel generators and the buses.

(8) It is assumed that significant differences exist between the ancillary and standby diesel generators. The ancillary diesel generators are sized smaller than the standby diesel generators to power only the selected loads. They will be designed differently from the standby diesel generators. Moreover, the ancillary diesel generator output voltage is designed to be 480 VAC while the standby diesel generators power the PIP buses at 6.9 kV. Therefore, separate CCF groups for the ancillary diesel generators and standby diesel generators have been developed.

(9) It is assumed that the tie breaker between the two ancillary diesel buses is normally open. Manual operator action is required to close the breaker.

(10) The ancillary diesel bus A supplies AC power to the electric motor-driven fire pump, the RPV make-up pump. It also powers the train A RTNSS MCCs in different buildings.

(11) The ancillary diesel bus B powers the train B RTNSS MCCs in different buildings. When the ancillary DG A fails to supply power to the RPV make-up pump, ancillary diesel bus B can be aligned manually.

(12) For a loss of preferred power scenario concurrent with the failure of both standby diesel generators, it is assumed that the ancillary diesel buses can be used to supply power to the DPS cabinets and their cooling equipment.

(13) It is assumed that the operator action is required to balance the loads on the ancillary diesel generators. It is conservatively assumed that the failure to balance the loads will result in the failure of the ancillary diesel generators.

Figure 22.4.14-1 shows the fault tree developed for the new system tops R21-ANCILLARYA (Sheet 1) and R21-ANCILLARYB (Sheet 11).

22.4.14.3 Overall Impact on PRA Results

For the system functions modeled in the previous revision, the above system model changes result in negligible impacts. Table 22.4.14-1 shows the cutsets generated for the new system tops R21-ANCILLARYA & R21-ANCILLARYB. The new system top cutsets are dominated by the test and maintenance events for the ancillary diesel generator buses.

Because the built-in redundancy of the electric power system is not affected, the overall impact on the CDF and LRF results from the electric power system changes are negligible.

The addition of the ancillary diesel generators results in new system functions in the electric power system. The dependencies to the ancillary diesel generator buses are added in the following PRA systems:

- The RPV make-up pump
- Safety-related and nonsafety-related UPS buses (Ancillary diesel generator buses back up the 480 VAC buses that supply AC power to the UPS bypass transformers.)

The RPV make-up pump was previously designed as a diesel-driven pump, which is totally independent from the onsite and offsite AC power sources. The model change to power this pump with the ancillary diesel generator does not have significant risk impact because the ancillary diesel generators are totally independent from other onsite and offsite AC power sources.

The ancillary diesel generators provide the backup AC power sources to the UPS bypass transformers, which add more redundancy to the UPS power sources. More importantly, in an unlikely station blackout scenario (i.e., loss of preferred power concurrent with the loss of both standby diesel generators), the ancillary diesel generators can keep the nonsafety-related UPS buses powered indefinitely as long as their diesel fuel supply is maintained. Their impact on the UPS system model is discussed in more details in subsection 22.4.15.

22.4.14.3.1 Qualitative Assessment of External Events Impact

The only electrical system change that will result in changes in plant general arrangement is the ancillary diesel generators. Per DCD Tier 2 subsection 8.3.1.1.9, the ancillary diesel generators are Seismic Category II, as are their associated auxiliaries, controls, electrical buses, and fuel oil tanks. They are also housed in a Seismic Category II structure. Fire barriers are designed to separate the two ancillary diesel generator rooms and their associated auxiliaries.

Because the ancillary diesel generators are designed as a totally independent AC power source and are also housed in a separate seismically qualified building, they have negligible impact on the external events PRA analyses.

There are new fire ignition sources in the new structure housing the ancillary diesels. However, a fire in the ancillary diesel generator room should only affect one ancillary diesel generator and have negligible affect on the plant operation because this fire has no impact on the offsite power and standby diesel generators. Therefore, a postulated fire in the ancillary diesel generator building has no impact on normal plant operation and thus can be screened out as a fire initiating event.

22.4.14.4 Conclusion

Except for the ancillary diesel generators, the AC electric power systems' PRA model changes are mainly associated with the enhancement to PRA modeling assumptions, which have negligible impact on the CDF and LRF results.

The ancillary diesel generators provide more redundancy to the onsite AC power sources. They power the RPV make-up pump, which does not have significant impact on the CDF and LRF results. Their risk impact to the UPS system model is discussed in more details in subsection 22.4.15.

Table 22.4.14-1 AC Electric Power System – Cutsets (Ancillary Diesel Generator Buses Only)

R21-ANCILLARYA LOSS OF THE ANCILLARY DIESEL BUS A

Probability	% of Top	Event	Probability	Description
1.5E-03	99.5	R21-NSC-TM-ANCA	1.5E-03	NON-SAFETY SYSTEM COMPONENT IN TEST OR MAINTENANCE
4.8E-06	0.3	R21-BAC-LP-ANCA	4.8E-06	AC ELECTRICAL BUSWORK FAILS DURING OPERATION
9.27E-07	0.1	R11-1000A3	1.E-03	LOSS OF PIP-A BUS
		R21-XHE-FO-ADGCROSS	1.61E-02	OPERATOR FAILS TO CROSS-TIE THE ANCILLARY DG BUSES
		R21-DG_-FR-ADGA	5.76E-02	ADG-A FAILS TO RUN
7.41E-07	0.0	R11-1000A3	1.E-03	LOSS OF PIP-A BUS
		R21-XHE-FO-ADGCROSS	1.61E-02	OPERATOR FAILS TO CROSS-TIE THE ANCILLARY DG BUSES
		R21-DG_-TM-ADGA	4.6E-02	ANCILLARY DG-A IN MAINTENANCE
3.9E-07	0.0	R11-1000A3	1.E-03	LOSS OF PIP-A BUS
		R21-XHE-FO-ADGCROSS	1.61E-02	OPERATOR FAILS TO CROSS-TIE THE ANCILLARY DG BUSES
		R21-TRN-RE-FOADGA	2.42E-02	FAILURE TO RESTORE FUEL OIL TRANSFER TRAIN FOR ADG-A
2.59E-07	0.0	R11-1000A3	1.E-03	LOSS OF PIP-A BUS
		R21-XHE-FO-ADGCROSS	1.61E-02	OPERATOR FAILS TO CROSS-TIE THE ANCILLARY DG BUSES
		R21-XHE-FO-ADG	1.61E-02	OPERATOR FAILS TO CONTROL THE LOADS ON ANCILLARY DG BUSES
2.53E-07	0.0	R21-BAC-LP-ADG_1_2	2.53E-07	CCF of two components: R21-BAC-LP-ANCA & R21-BAC-LP-ANCB

2.25E-07	0.0	R11-1000A3	1.E-03	LOSS OF PIP-A BUS
		R21-XHE-FO-ADGCROSS	1.61E-02	OPERATOR FAILS TO CROSS-TIE THE ANCILLARY DG BUSES
		R21-DG_-FS-ADGA	1.4E-02	DIESEL GENERATOR FAILS TO START AND LOAD
8.64E-08	0.0	R11-1000A3	1.E-03	LOSS OF PIP-A BUS
		R21-NSC-TM-ANCB	1.5E-03	NON-SAFETY SYSTEM COMPONENT IN TEST OR MAINTENANCE
		R21-DG_-FR-ADGA	5.76E-02	ADG-A FAILS TO RUN
6.9E-08	0.0	R11-1000A3	1.E-03	LOSS OF PIP-A BUS
		R21-NSC-TM-ANCB	1.5E-03	NON-SAFETY SYSTEM COMPONENT IN TEST OR MAINTENANCE
		R21-DG_-TM-ADGA	4.6E-02	ANCILLARY DG-A IN MAINTENANCE

R21-ANCILLARYB LOSS OF THE ANCILLARY DIESEL BUS B

Probability	% of Top	Event	Probability	Description
1.5E-03	99.4	R21-NSC-TM-ANCB	1.5E-03	NON-SAFETY SYSTEM COMPONENT IN TEST OR MAINTENANCE
4.8E-06	0.3	R21-BAC-LP-ANCB	4.8E-06	AC ELECTRICAL BUSWORK FAILS DURING OPERATION
1.02E-06	0.1	R11-1000B3	1.E-03	LOSS OF PIP-B BUS
		R21-XHE-FO-ADGCROSS	1.77E-02	OPERATOR FAILS TO CROSS-TIE THE ANCILLARY DG BUSES
		R21-DG_-FR-ADGB	5.76E-02	DIESEL GENERATOR FAILS TO RUN
8.14E-07	0.1	R11-1000B3	1.E-03	LOSS OF PIP-B BUS
		R21-XHE-FO-ADGCROSS	1.77E-02	OPERATOR FAILS TO CROSS-TIE THE ANCILLARY DG BUSES
		R21-DG_-TM-ADGB	4.6E-02	ANCILLARY DG-B IN MAINTENANCE

4.28E-07	0.0	R11-1000B3	1.E-03	LOSS OF PIP-B BUS
		R21-XHE-FO-ADGCROSS	1.77E-02	OPERATOR FAILS TO CROSS-TIE THE ANCILLARY DG BUSES
		R21-TRN-RE-FOADGB	2.42E-02	FAILURE TO RESTORE FUEL OIL TRANSFER TRAIN FOR ADG-A
3.13E-07	0.0	R11-1000B3	1.E-03	LOSS OF PIP-B BUS
		R21-XHE-FO-ADGCROSS	1.77E-02	OPERATOR FAILS TO CROSS-TIE THE ANCILLARY DG BUSES
		R21-XHE-FO-ADG	1.77E-02	OPERATOR FAILS TO CONTROL THE LOADS ON ANCILLARY DG BUSES
2.53E-07	0.0	R21-BAC-LP-ADG_1_2	2.53E-07	CCF of two components: R21-BAC-LP-ANCA & R21-BAC-LP-ANCB
2.48E-07	0.0	R11-1000B3	1.E-03	LOSS OF PIP-B BUS
		R21-XHE-FO-ADGCROSS	1.77E-02	OPERATOR FAILS TO CROSS-TIE THE ANCILLARY DG BUSES
		R21-DG_-FS-ADGB	1.4E-02	DIESEL GENERATOR FAILS TO START AND LOAD
8.64E-08	0.0	R11-1000B3	1.E-03	LOSS OF PIP-B BUS
		R21-NSC-TM-ANCA	1.5E-03	NON-SAFETY SYSTEM COMPONENT IN TEST OR MAINTENANCE
		R21-DG_-FR-ADGB	5.76E-02	DIESEL GENERATOR FAILS TO RUN
6.9E-08	0.0	R11-1000B3	1.E-03	LOSS OF PIP-B BUS
		R21-NSC-TM-ANCA	1.5E-03	NON-SAFETY SYSTEM COMPONENT IN TEST OR MAINTENANCE
		R21-DG_-TM-ADGB	4.6E-02	ANCILLARY DG-B IN MAINTENANCE

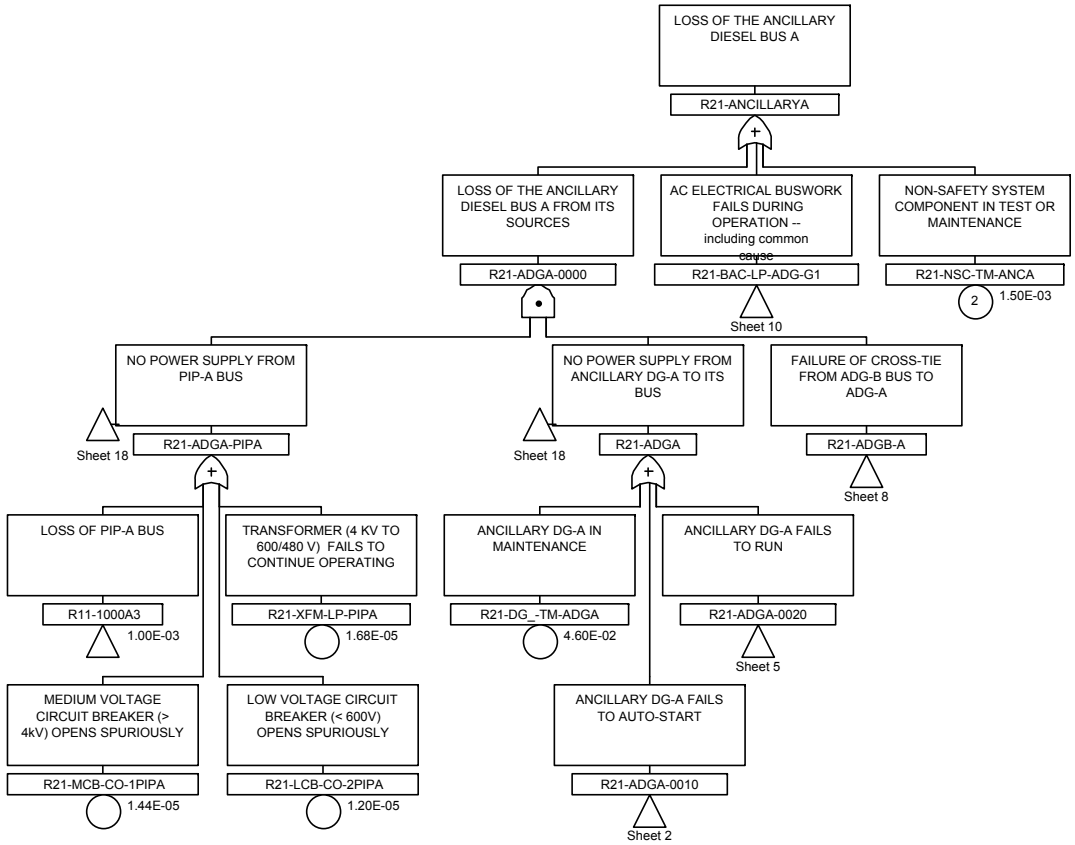

Figure 22.4.14-1 Standby On Site Power Supply (Ancillary Diesel Generator Buses Only)
Sheet 1

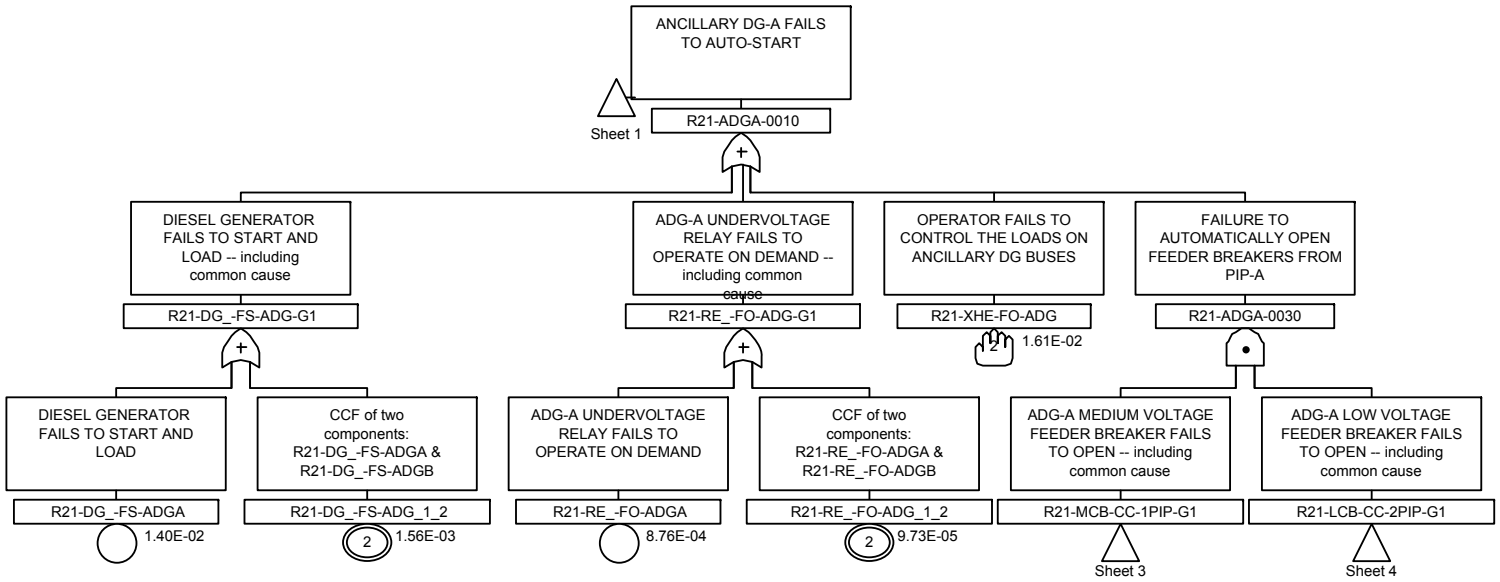

Figure 22.4.14-1. Sheet 2 Standby On Site Power Supply (Ancillary Diesel Generator Buses Only)

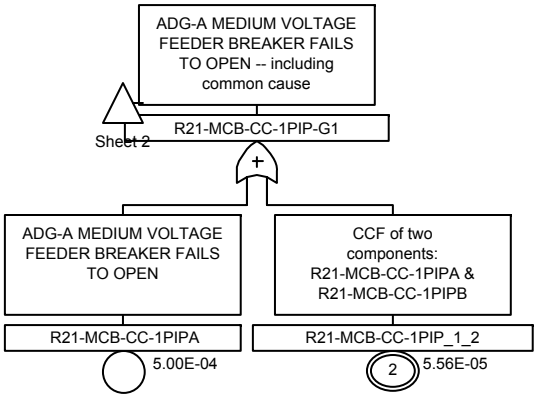

Figure 22.4.14-1. Sheet 3 Standby On Site Power Supply (Ancillary Diesel Generator Buses Only)

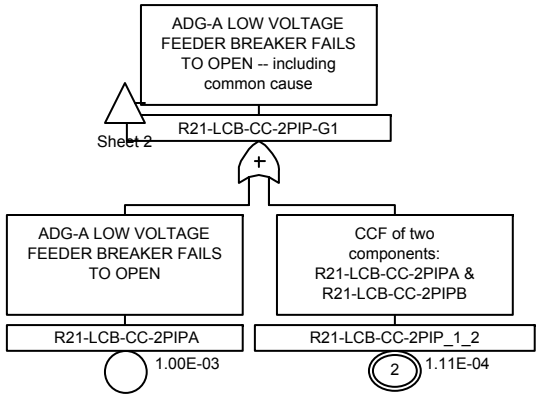

Figure 22.4.14-1. Sheet 4 Standby On Site Power Supply (Ancillary Diesel Generator Buses Only)

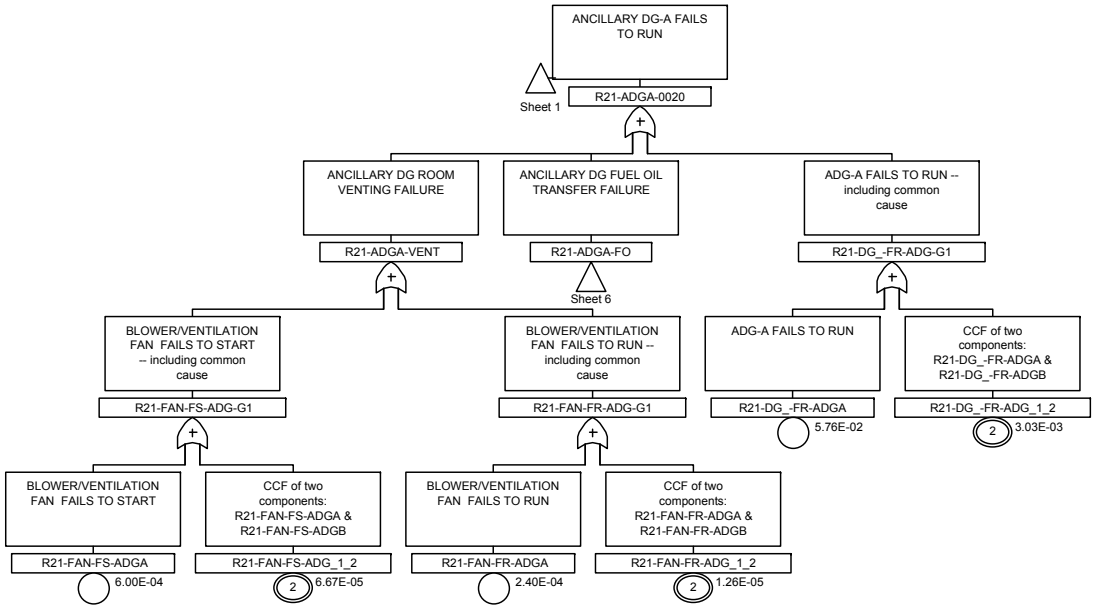

Figure 22.4.14-1. Sheet 5 Standby On Site Power Supply (Ancillary Diesel Generator Buses Only)

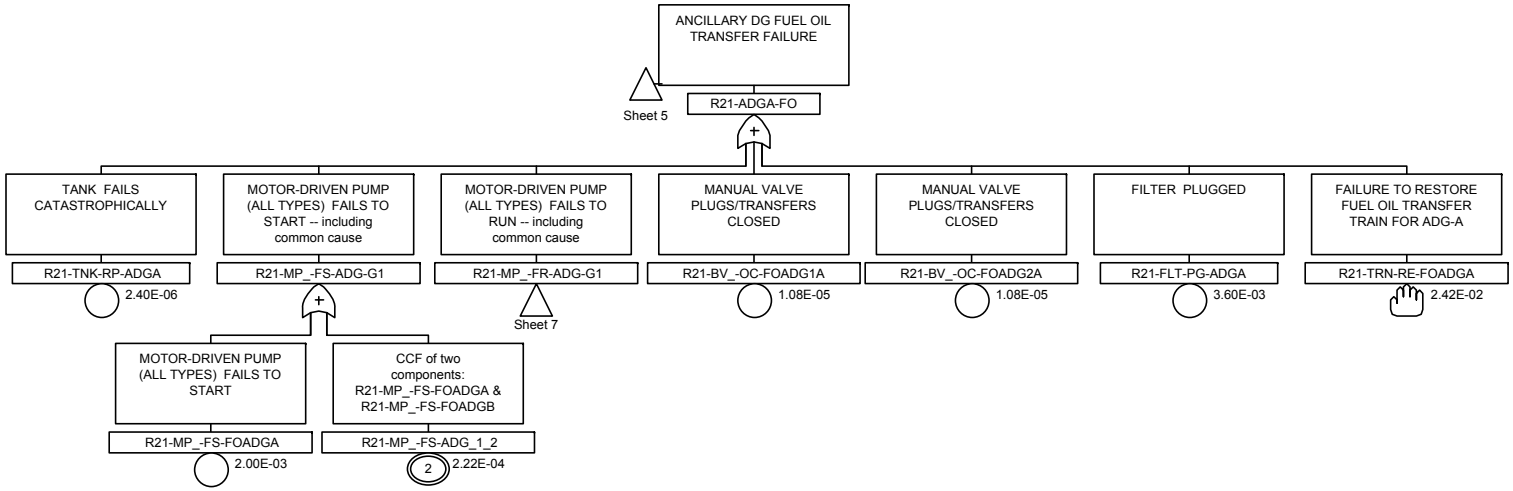

Figure 22.4.14-1. Sheet 6 Standby On Site Power Supply (Ancillary Diesel Generator Buses Only)

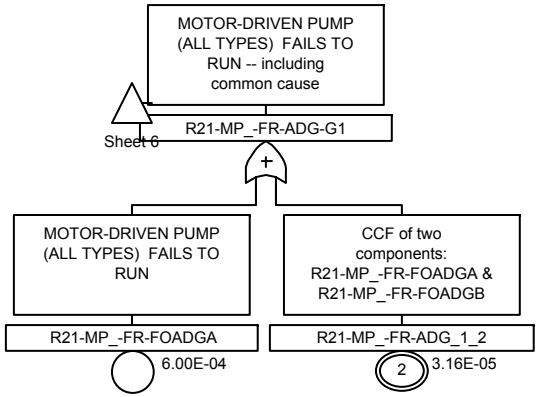

Figure 22.4.14-1. Sheet 7 Standby On Site Power Supply (Ancillary Diesel Generator Buses Only)

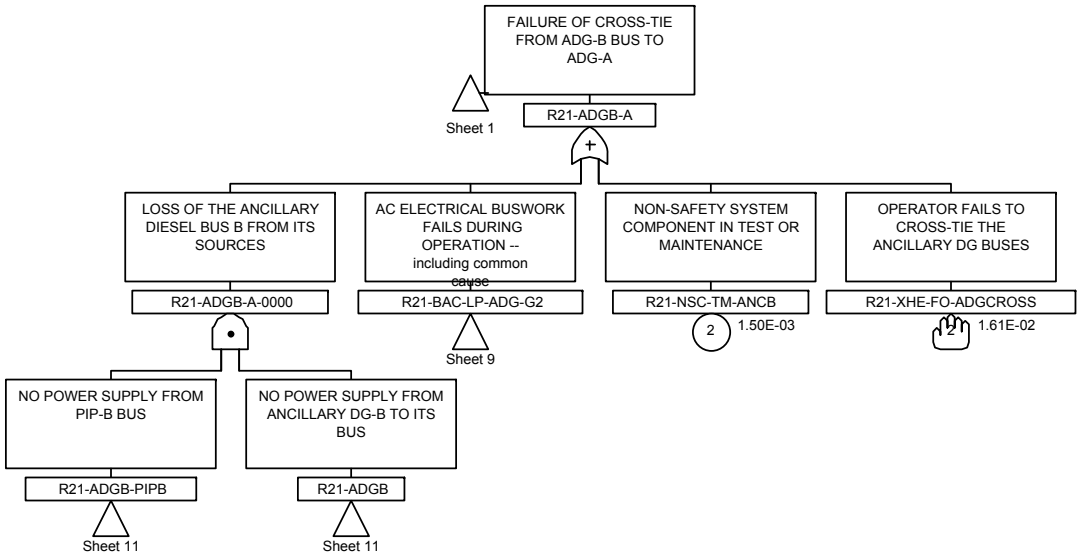

Figure 22.4.14-1. Sheet 8 Standby On Site Power Supply (Ancillary Diesel Generator Buses Only)

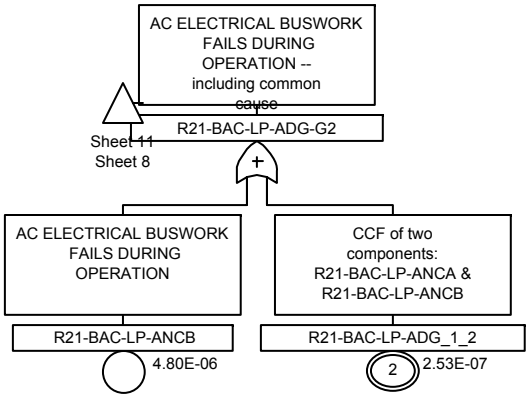

Figure 22.4.14-1. Sheet 9 Standby On Site Power Supply (Ancillary Diesel Generator Buses Only)

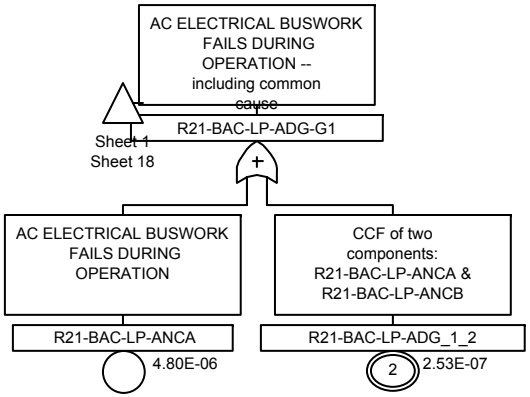

Figure 22.4.14-1. Sheet 10 Standby On Site Power Supply (Ancillary Diesel Generator Buses Only)

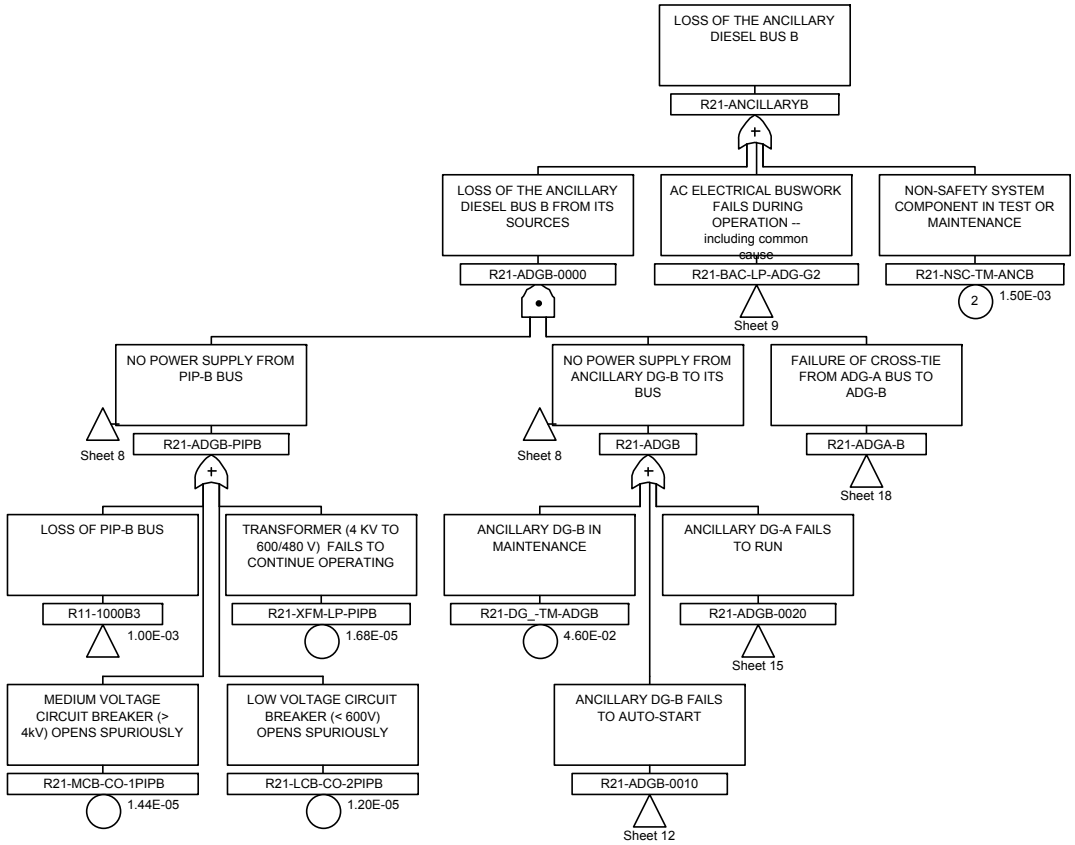

Figure 22.4.14-1. Sheet 11 Standby On Site Power Supply (Ancillary Diesel Generator Buses Only)

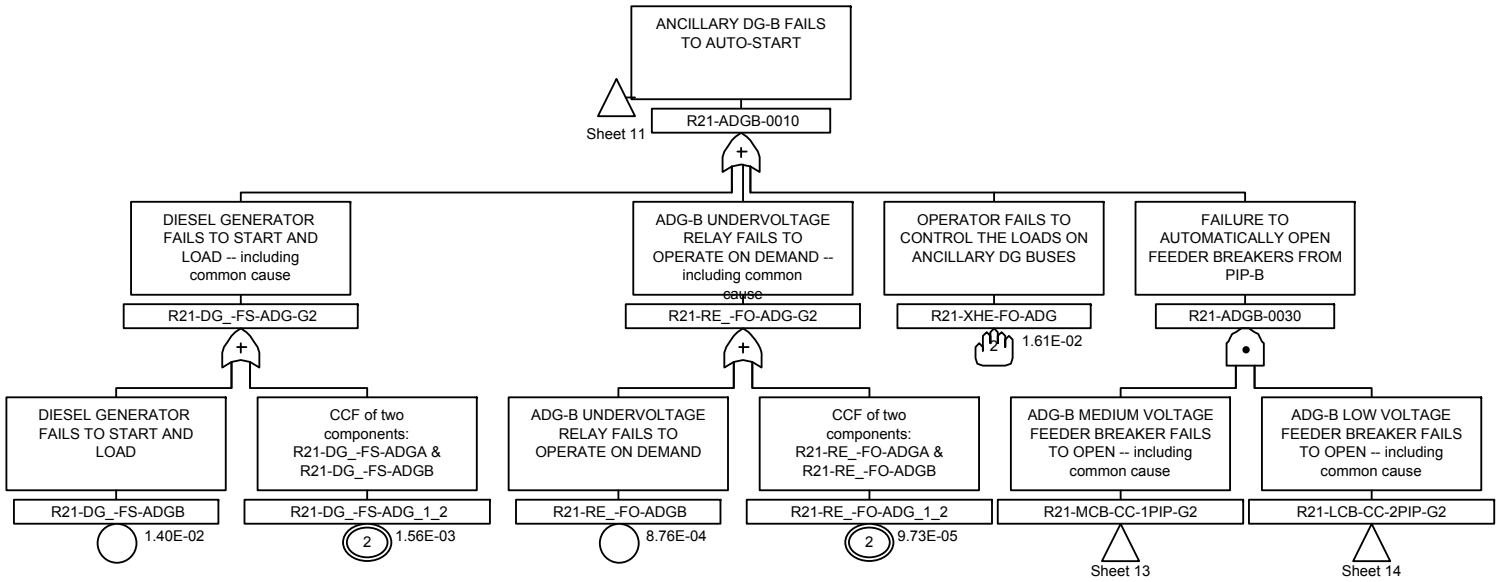

Figure 22.4.14-1. Sheet 12 Standby On Site Power Supply (Ancillary Diesel Generator Buses Only)

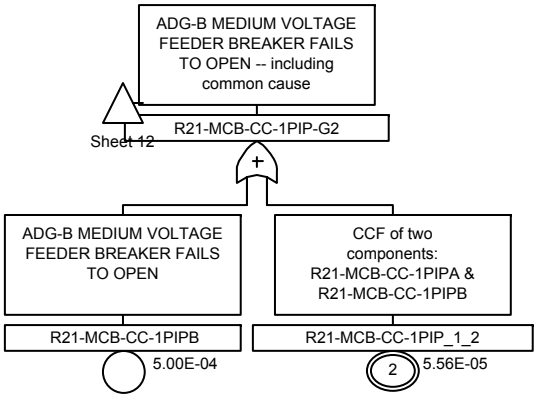

Figure 22.4.14-1. Sheet 13 Standby On Site Power Supply (Ancillary Diesel Generator Buses Only)

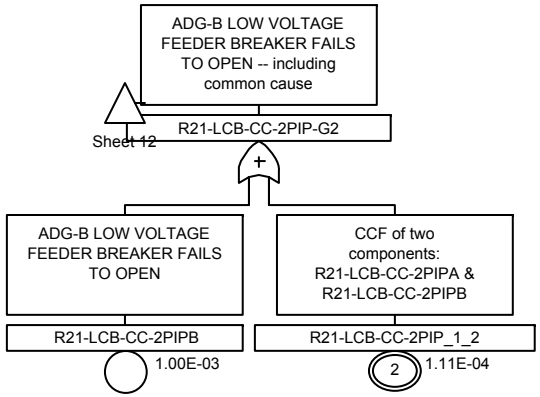

Figure 22.4.14-1. Sheet 14 Standby On Site Power Supply (Ancillary Diesel Generator Buses Only)

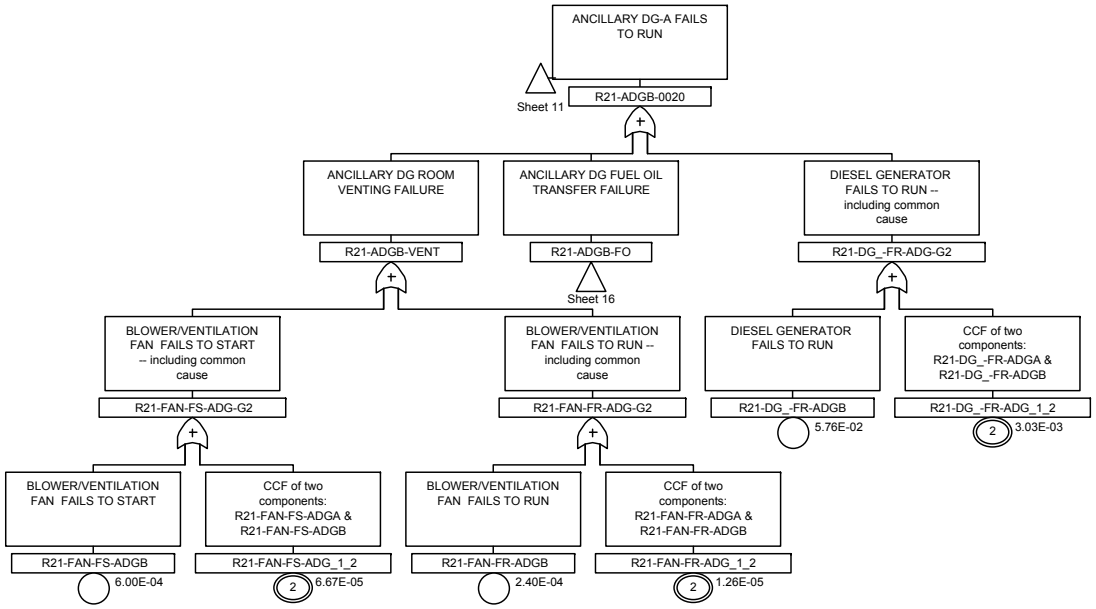

Figure 22.4.14-1. Sheet 15 Standby On Site Power Supply (Ancillary Diesel Generator Buses Only)

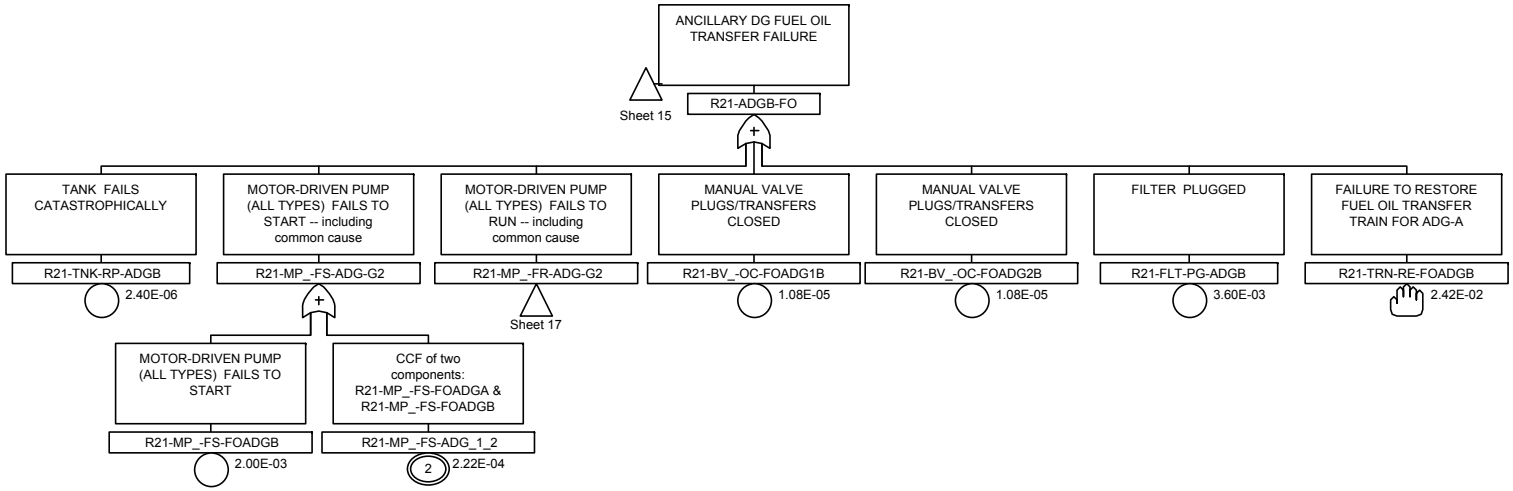

Figure 22.4.14-1. Sheet 16 Standby On Site Power Supply (Ancillary Diesel Generator Buses Only)

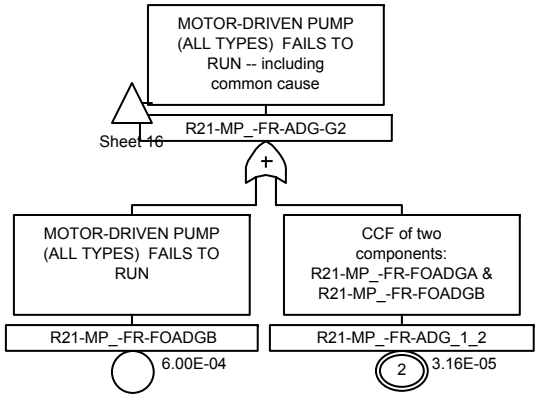

Figure 22.4.14-1. Sheet 17 Standby On Site Power Supply (Ancillary Diesel Generator Buses Only)

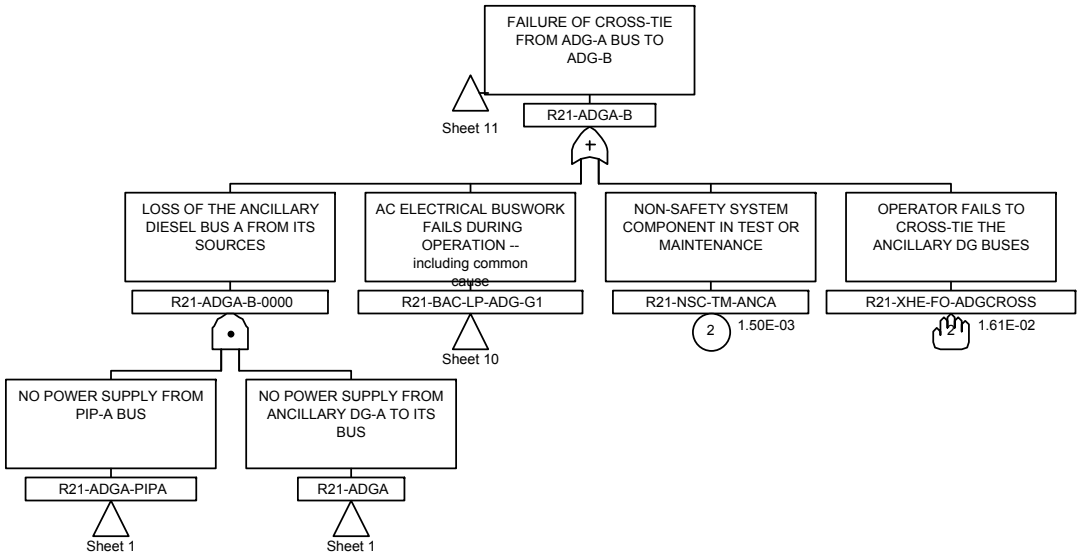

Figure 22.4.14-1. Sheet 18 Standby On Site Power Supply (Ancillary Diesel Generator Buses Only)

22.4.15 Uninterruptible AC Power Supply System

The Uninterruptible AC Power Supply System (UPS) includes both the safety-related and nonsafety-related UPS subsystems.

22.4.15.1 Overview

In DCD Tier 2 Revision 5 Section 8, there are several design changes that impact the UPS PRA system model. Except for the addition of the ancillary diesel generators, other system changes have negligible impact on the system model.

22.4.15.2 System Design and PRA Model Changes

22.4.15.2.1 The Parallel Redundant Inverter Configuration for the Safety-Related UPS Buses

Per DCD Tier 2 subsection 8.3.1.1.3, the two inverters in each safety-related division will be configured for parallel redundant operation to allow load sharing and the equal discharge of the division's safety-related batteries. Consistent with DCD Tier 2 Figure 8.1.4, this design change results in the following UPS system model changes:

(1) Modified the power dependencies for all the safety-related UPS buses:

   a. 120VAC UPS Bus 11 powers all Division 1 load groups (UPS top gates R13-11-CB, R13-11-RB, R13-12-CB, R13-12-RB);

   b. 120VAC UPS Bus 21 powers all Division 2 load groups (UPS top gates R13-21-CB, R13-21-RB, R13-22-CB, R13-22-RB);

   c. 120VAC UPS Bus 31 powers all Division 3 load groups (UPS top gates R13-31-CB, R13-31-RB, R13-32-CB, R13-32-RB);

   d. 120VAC UPS Bus 41 powers all Division 4 load groups (UPS top gates R13-41-CB, R13-41-RB, R13-42-CB, R13-42-RB).

(2) Deleted the logic for 120VAC safety-related UPS buses 12, 22, 32 and 42, which no longer exist.

(3) Deleted the maintenance transfer switches associated with the deleted UPS buses 12, 22, 32 and 42.

The above changes slightly changed the cutsets for system tops. However, these changes have negligible impact on the CDF and LRF results because both load groups in each UPS division have already been used to power their loads for redundancy in Revision 2 (i.e., AND'ed in the PRA model).

22.4.15.2.2 The AC Power Dependencies to Ancillary Diesel Generators and Other AC Buses

As shown in DCD Tier 2 Figure 8.3-3, the ancillary diesel generators can power both the safety-related and nonsafety-related UPS buses via the bypass transformers. This provides additional redundancy to the AC power sources to the UPS buses. The addition of the ancillary diesel generators also ensures the long-term availability of nonsafety-related UPS power to the N-DCIS system under the unlikely station blackout scenarios, which is discussed in the next subsection.

The short-term UPS bus models do not include AC power dependencies. Therefore, the addition of the ancillary diesel generators results in no changes to the short-term UPS bus models.

For the long-term UPS bus models, the ancillary diesel generator buses are modeled as one of the two AC power sources to the bypass transformers. This change results in lower failure probabilities for the system tops because the ancillary diesel generators improve the system reliability.

22.4.15.2.3 The Enhanced Long-Term UPS System Model

The UPS system model has two sets of system tops: long-term and short-term. The short-term tops conservatively model batteries as the sole power source to the UPS buses. These tops are used mainly to break the logical loops between the DCIS and electrical power system models. Some DCIS tops also conservatively use the short-term UPS tops for simplicity if the DCIS function is short-term.

The long-term UPS buses credit all AC and DC power sources. For nonsafety-related UPS buses, the batteries are designed with two-hour capacity. Therefore, for some long-term functions, the nonsafety-related UPS buses may not be able to provide power after the batteries are depleted under a station blackout scenario. Previously it is assumed that the detailed design will implement additional features to maintain the availability of nonsafety-related UPS buses for a limited number of long-term functions. In DCD revision 5, the ancillary diesel generators are added as an independent AC power source, which can power the nonsafety-related UPS buses for long-term functions. Therefore, the long-term UPS system tops are enhanced to explicitly model the ancillary diesel generator buses as an additional AC power source and to remove the two-hour nonsafety-related batteries.

Figure 22.4.15-1 shows the updated fault tree developed for the following two long-term UPS system tops:

- R13-11-CB (Figure 22.4.15-1 Sheet 8): Loss of SR 120VAC UPS from Bus R13-11 for Control BLDG
- R13-NSR-CBA (Figure 22.4.15-1 Sheet 1): Loss of 208/120VAC from NSR R13 Control BLDG Load Group A

The above two system tops include the transfers to the ancillary diesel generator buses. R13-11-CB is shown as an example for the safety-related long-term UPS buses and R13-NSR-CBA for the nonsafety-related. The logic for the fault tree is show without the expanded common cause failure logic for clarity.

The N-DCIS models for short-term and long-term functions are also updated to capture the correct dependencies, which are discussed in Subsection 22.4.5.

Because the ancillary diesel generators are totally independent from other AC power sources, they have improved the robustness of the UPS system designs.

22.4.15.2.4 The Updated CCF Group for Nonsafety-Related UPS Transformers Feeding Different Building Load Groups

Per DCD Tier 2 Figure 8.1-5 Sheet 1, the nonsafety-related UPS transformers feeding different building load groups have been updated to use the same design (i.e., the input / output voltages

are all designed as 480-208/120VAC-3Ø). The Revision 2 nonsafety-related UPS system model assumed two types of transformer designs (480-208/120VAC-3Ø and 480/120VAC-1Ø) as shown in Figure 4.15-1.

This design change results in the merging of the two previously defined CCF groups (R13-XFL-LP-CCFNSR2 and R13-XFL-LP-CCFNSR3) into one large group (R13-XFL-LP-CCFNSR2).

This model update has negligible impact on the system tops because the transformer CCF basic event modeled will fail the subject system tops no matter how the CCF group is defined. On the other hand, the updated transformer CCF group will slightly increase CDF because the CCF of all nonsafety-related transformers that feed all the building load groups will result in a loss of all nonsafety-related UPS power to N-DCIS system although it is highly unlikely.

22.4.15.3 Overall Impact on PRA Results

The UPS model updates described above result in some changes in system tops, which have generally improved system reliability. The UPS system tops are modeled as UPS bus load groups, which are mainly used to support DCIS system functions. The overall impact on PRA results from these supporting system functions is evaluated in the master PRA model quantification. As shown in subsections 22.7 and 22.8, there are no notable changes in PRA results that are introduced by the UPS system model updates. This is consistent with the above discussion for each UPS model change.

22.4.15.3.1 Qualitative Assessment of External Events Impact

The UPS system design changes result in no change in plant general arrangement.

The ancillary diesel generators are explicitly modeled as the station blackout power source for the nonsafety-related UPS buses, whose impact on external events models has been qualitatively evaluated in subsection 22.4.14.3.1.

22.4.15.4 Conclusion

The UPS system design and PRA model changes improve the UPS system reliability and explicitly provide the permanently installed capability to operate long-term active equipment. All of these changes have negligible total impact on the CDF and LRF results.

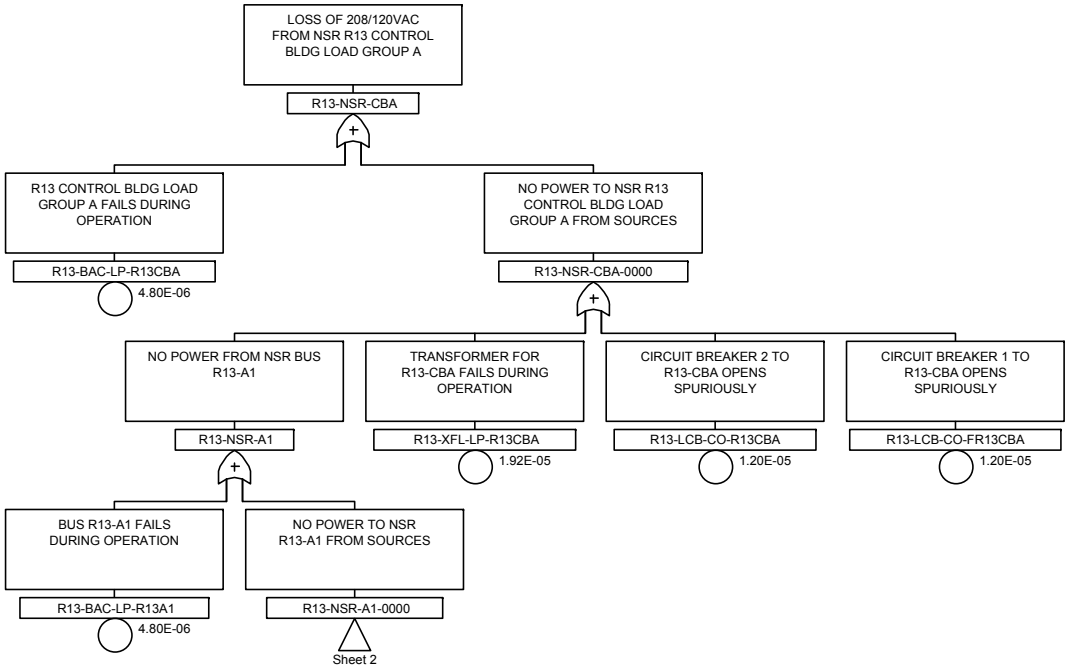

Figure 22.4.15-1 Uninterruptible AC Power (System Tops R13-11-CB and R13-NSR-CBA Only)

Sheet 1

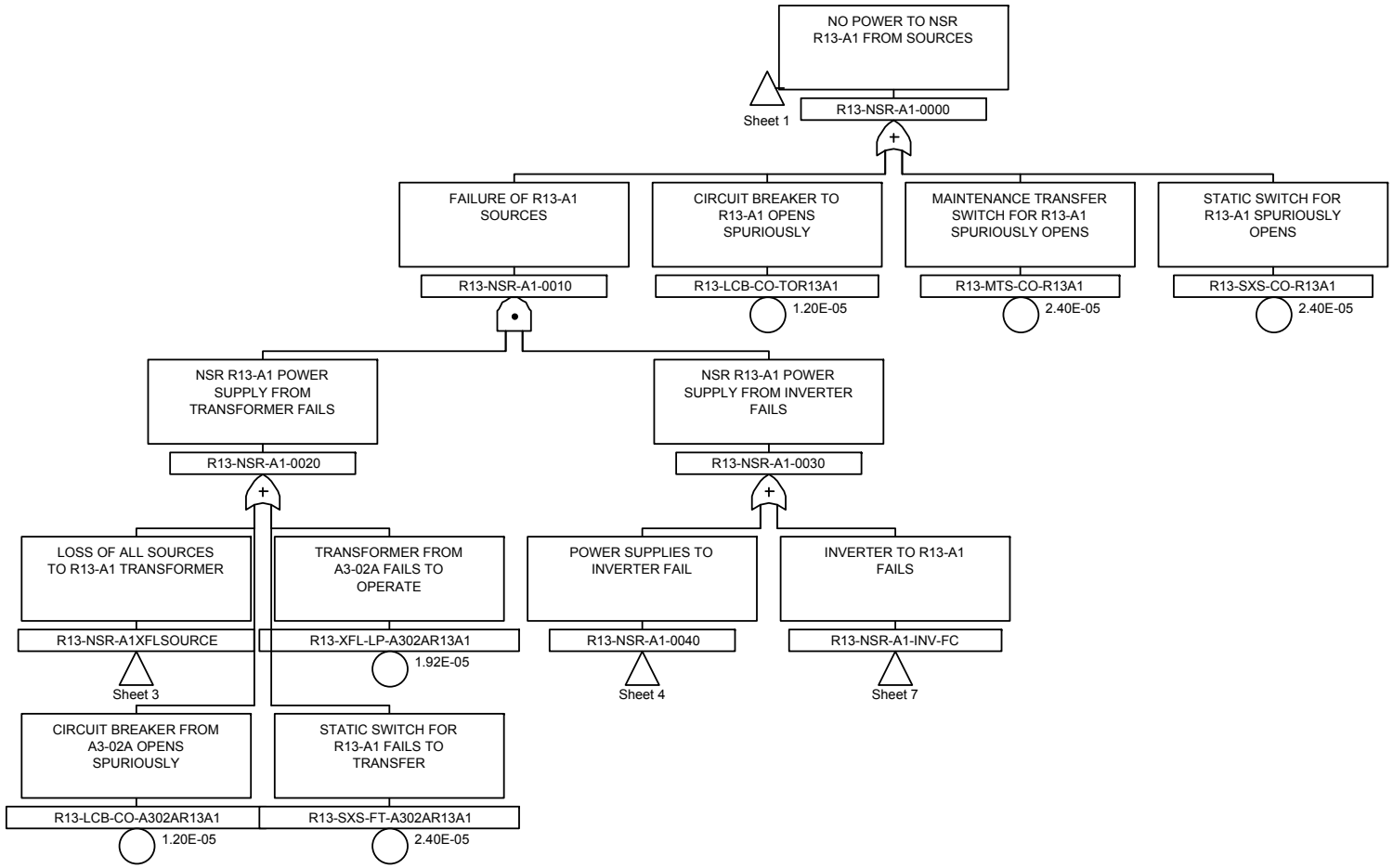

Figure 22.4.15-1. Sheet 2 Uninterruptible AC Power (System Tops R13-11-CB and R13-NSR-CBA Only)

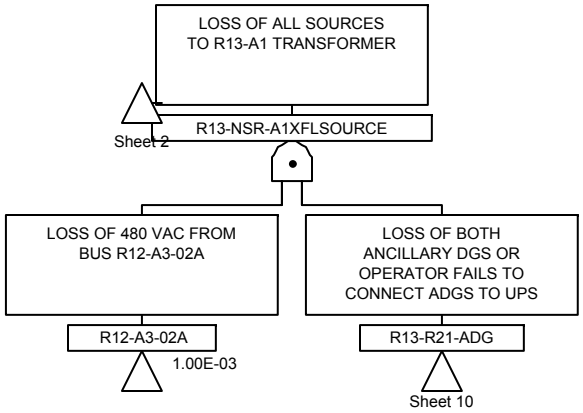

Figure 22.4.15-1. Sheet 3 Uninterruptible AC Power (System Tops R13-11-CB and R13-NSR-CBA Only)

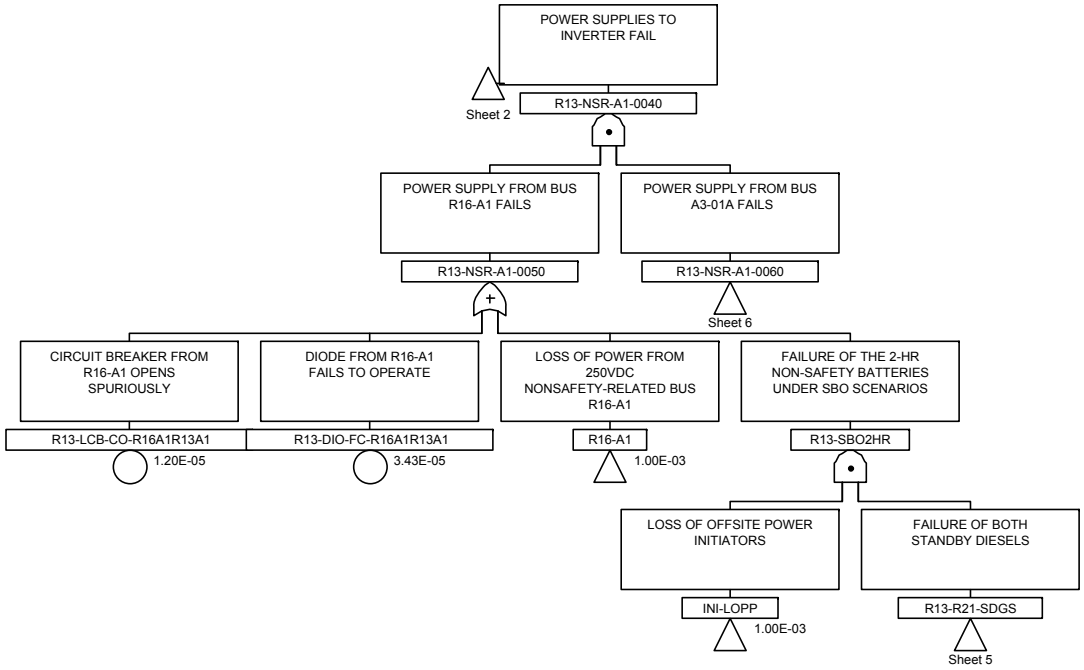

Figure 22.4.15-1. Sheet 4 Uninterruptible AC Power (System Tops R13-11-CB and R13-NSR-CBA Only)

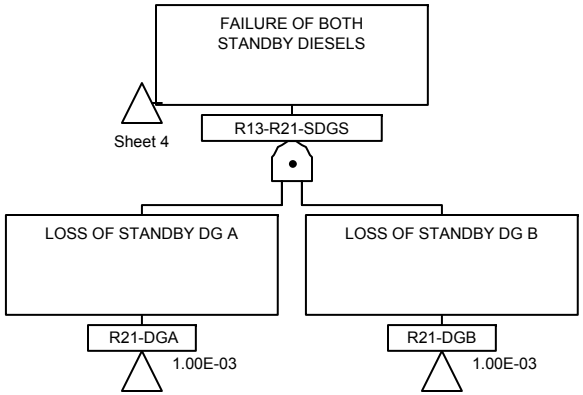

Figure 22.4.15-1. Sheet 5 Uninterruptible AC Power (System Tops R13-11-CB and R13-NSR-CBA Only)

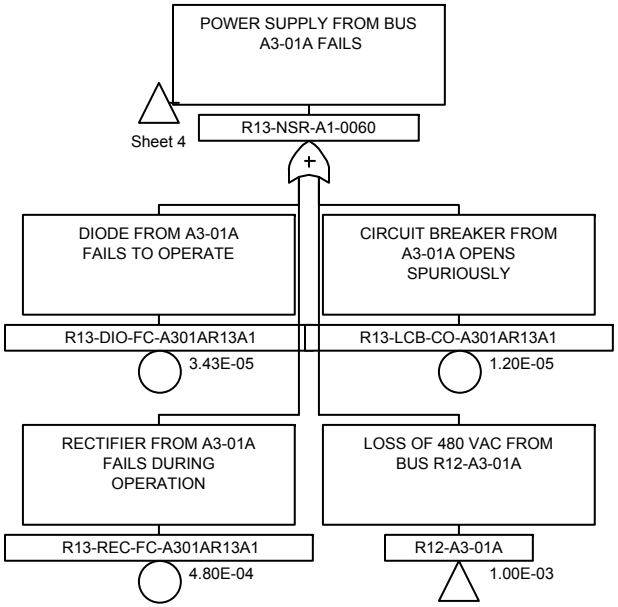

Figure 22.4.15-1. Sheet 6 Uninterruptible AC Power (System Tops R13-11-CB and R13-NSR-CBA Only)

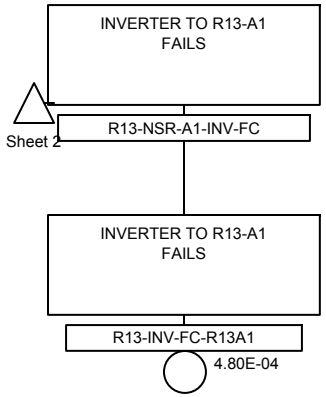

Figure 22.4.15-1. Sheet 7 Uninterruptible AC Power (System Tops R13-11-CB and R13-NSR-CBA Only)

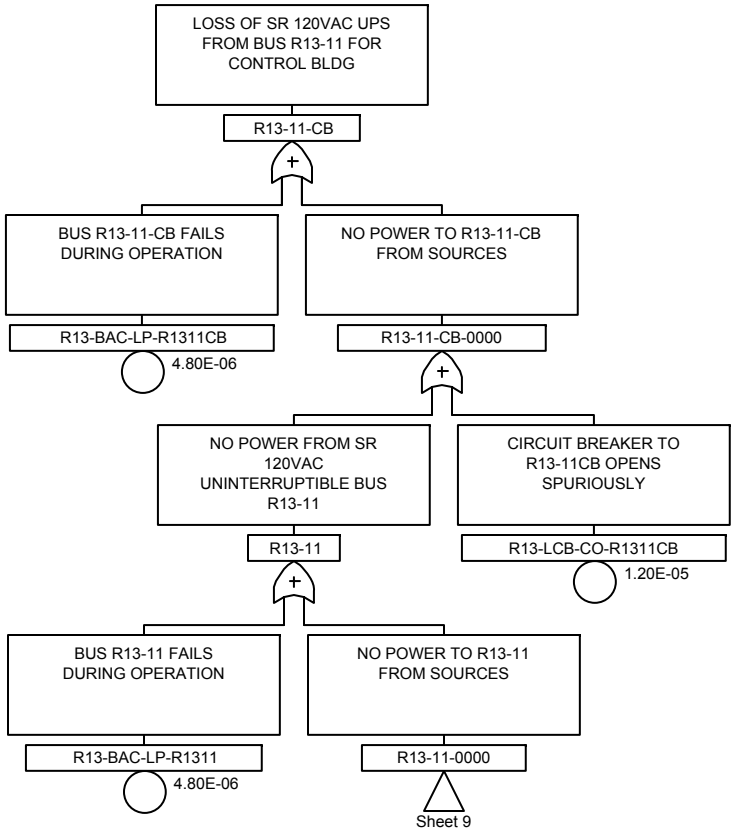

Figure 22.4.15-1. Sheet 8 Uninterruptible AC Power (System Tops R13-11-CB and R13-NSR-CBA Only)

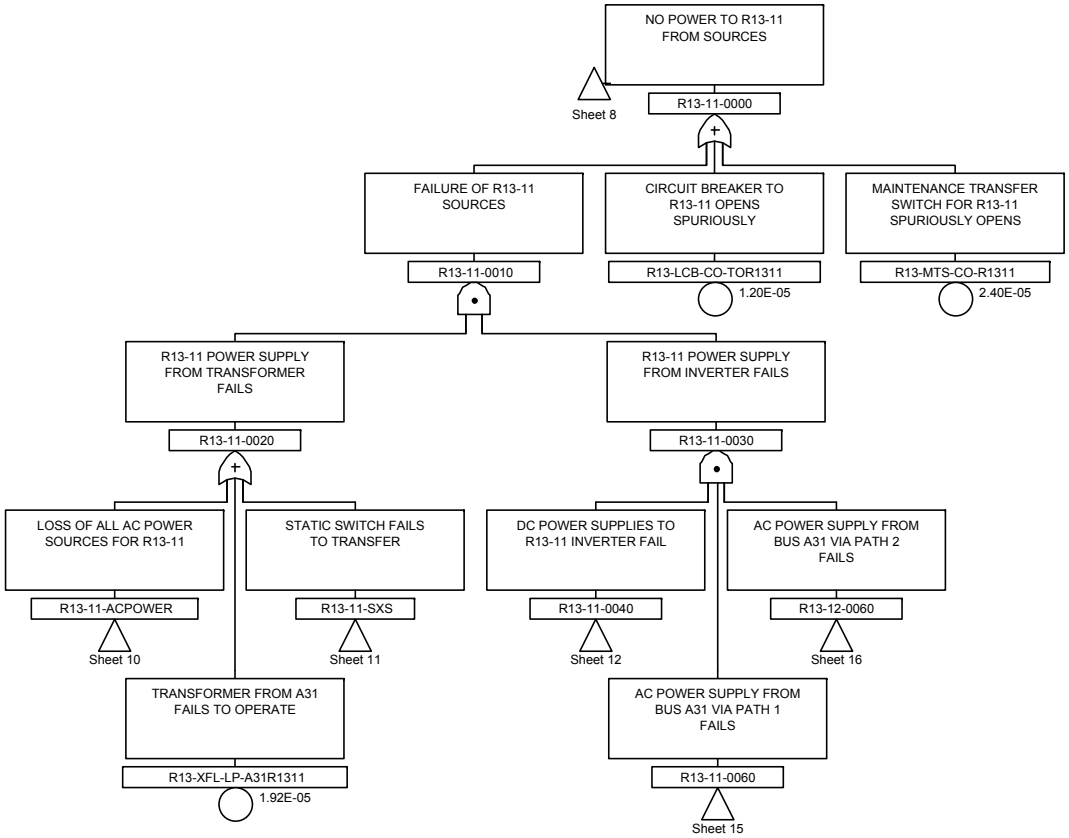

Figure 22.4.15-1. Sheet 9 Uninterruptible AC Power (System Tops R13-11-CB and R13-NSR-CBA Only)

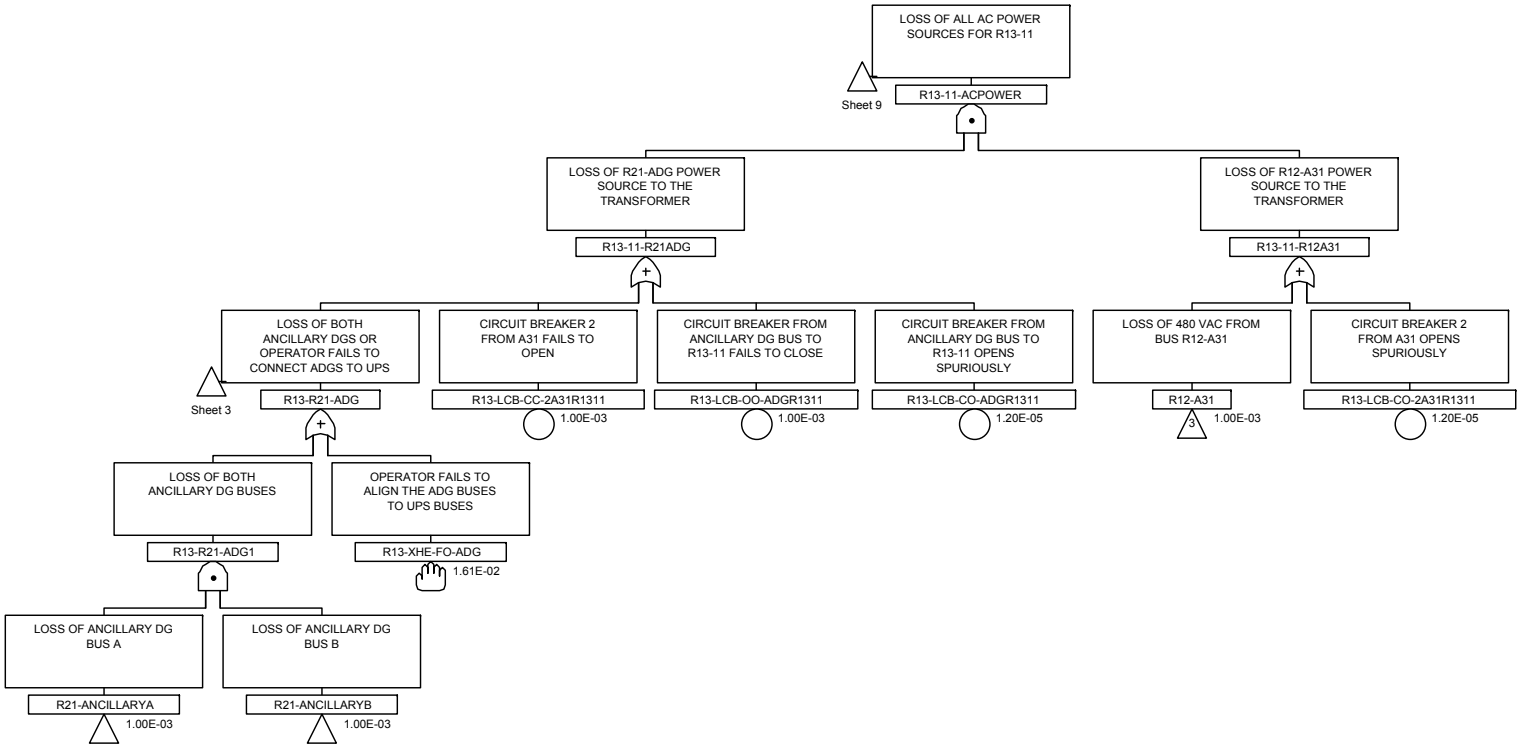

Figure 22.4.15-1. Sheet 10 Uninterruptible AC Power (System Tops R13-11-CB and R13-NSR-CBA Only)

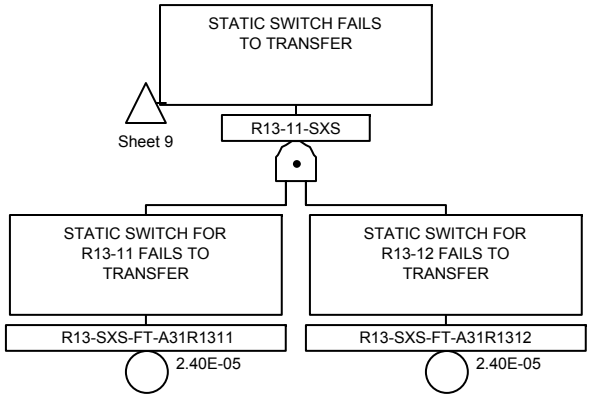

Figure 22.4.15-1. Sheet 11 Uninterruptible AC Power (System Tops R13-11-CB and R13-NSR-CBA Only)

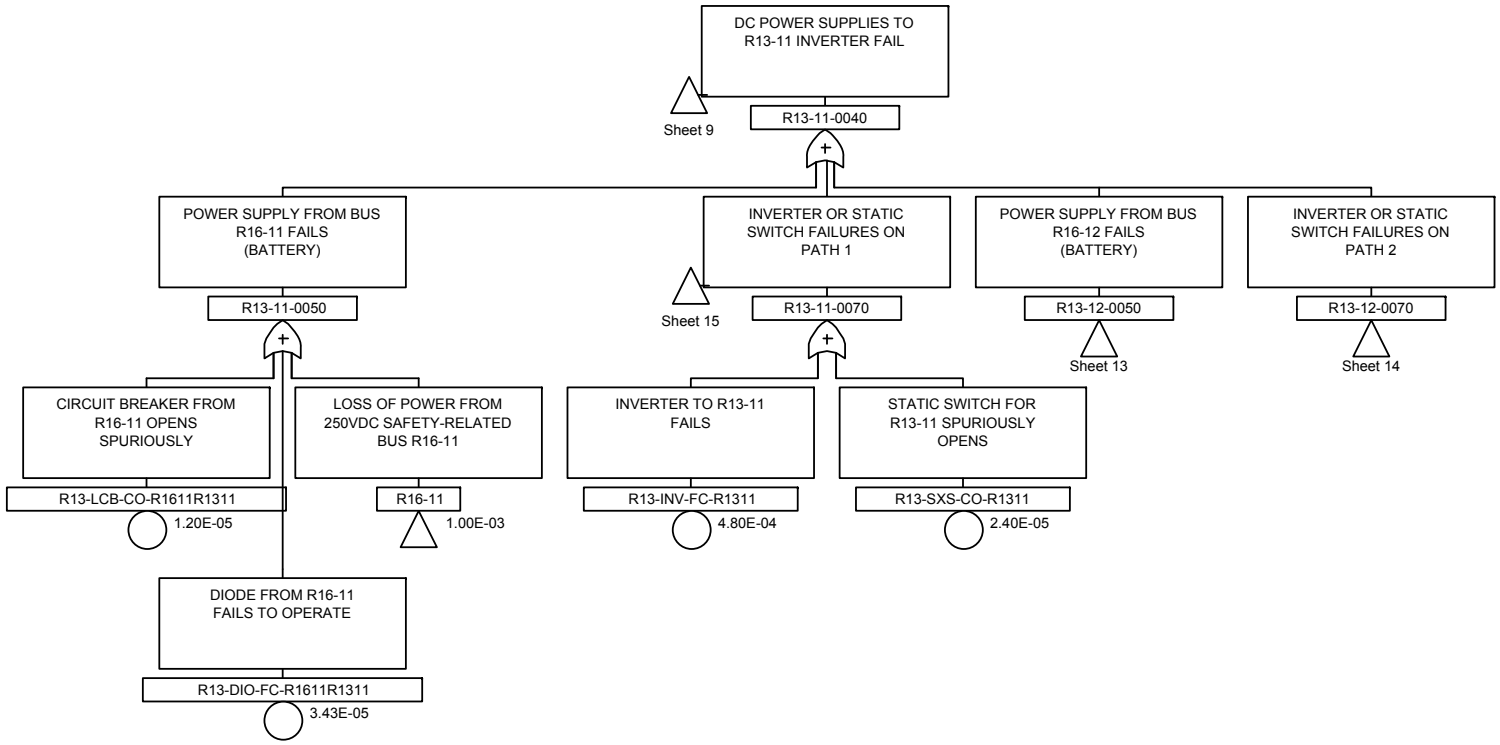

Figure 22.4.15-1. Sheet 12 Uninterruptible AC Power (System Tops R13-11-CB and R13-NSR-CBA Only)

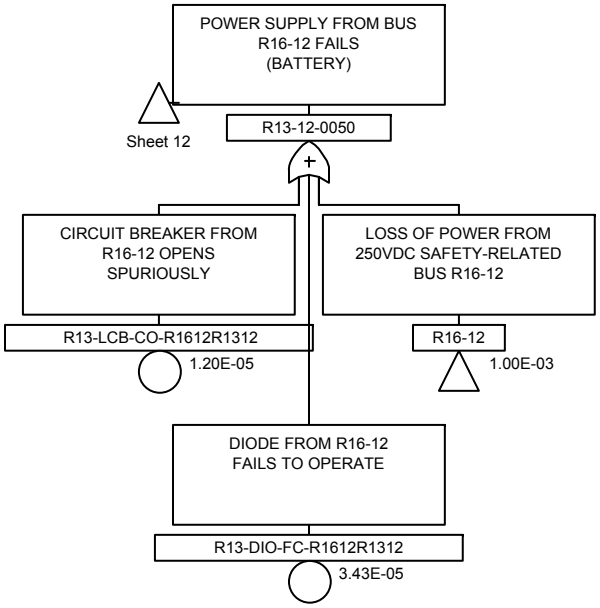

Figure 22.4.15-1. Sheet 13 Uninterruptible AC Power (System Tops R13-11-CB and R13-NSR-CBA Only)

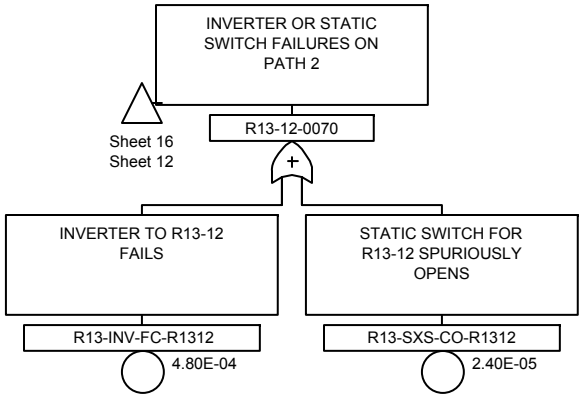

Figure 22.4.15-1. Sheet 14 Uninterruptible AC Power (System Tops R13-11-CB and R13-NSR-CBA Only)

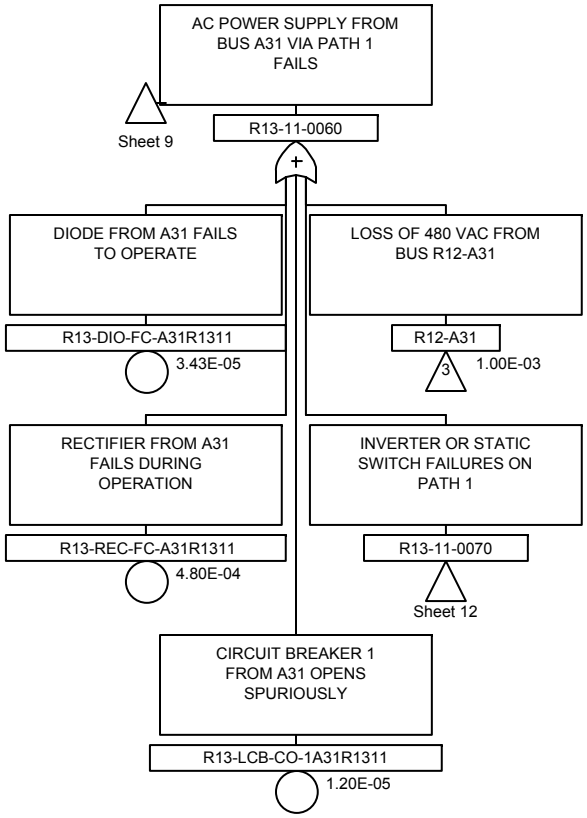

Figure 22.4.15-1. Sheet 15 Uninterruptible AC Power (System Tops R13-11-CB and R13-NSR-CBA Only)

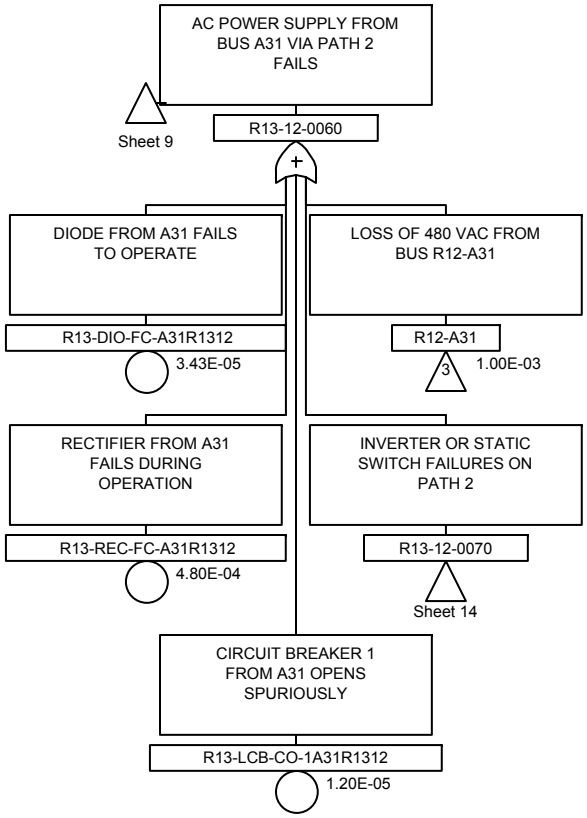

Figure 22.4.15-1. Sheet 16 Uninterruptible AC Power (System Tops R13-11-CB and R13-NSR-CBA Only)

22.4.16 Fire Protection System

22.4.16.1 Overview

The Fire Protection System (FPS) has had significant design changes since Revision 2 of the ESBWR PRA was completed. The Revision 3 model for FPS has been updated to account for many of the changes. This section examines the changes to the design of the system, the changes made to the PRA model, and the impact the model changes have on the PRA results.

22.4.16.2 System Design and PRA Model Changes

22.4.16.2.1 Dedicated Low Pressure Coolant Injection (LPCI) Pump

FPS equipment is credited in the PRA model for supporting 2 functions, ICS/PCCS pool makeup and Low Pressure Coolant Injection (LPCI). The logic associated with the pool makeup has not changed. The changes described here only apply to the injection function (PRA fault tree gate VM-TOPINJ).

The previous FPS design allowed for the system to pump FPS water into the reactor for low pressure makeup following depressurization. Any one of the four pumps functioning could meet the success criteria. Concerns about flow and pressure demands for the function led to a design change. The FPS system as previously designed and modeled has not significantly changed. The only change is that the connection to allow FPS to supply makeup to the RPV has been removed. A new pump has been added that is solely designed for RPV makeup. This new pump has no other FPS related functions.

Differences between the new and old design include:

- Only one pump is available to meet success criteria instead of four,
- The new pump is an electric motor driven pump with power supplied by the newly designed Ancillary Diesel Generators. The previous design had diesel driven pumps as well as electric motor driven pumps,
- Piping between the pump and the FAPCS connection is dedicated for makeup function and is not part of any FPS header or other FPS piping, and
- Piping is permanently installed and there is no longer a spool piece required.

Similarities between new and old design include:

- The suction source for the new pump is the two 2082 m^3 (550,000 gallon) FPS storage tanks. To simplify modeling, only one of the two tanks is included in the fault tree model (Primary FPS Tank T1A). Makeup Water System is also available to the four FPS pumps but is not available for the new LPCI pump.
- The flow path through FAPCS and Feedwater piping is the same.
- Successful functions still require operator action to start the pump and open manual valves to align the system.

New logic was added to the fault tree to account for the design changes. The logic associated with the valves connecting the FPS to the RPV was not changed, as the same valves are required

to function. The same operator actions associated with the Revision 2 model have also been unchanged for the Revision 3 model. There are no significant changes to the actions/scenarios to justify updating the logic. Figure 22.4.16-1 shows a simplified diagram of the new system. Table 22.4.16-1 shows the cutsets from the VM-TOPINJ gate for both the Revision 2 and Revision 3 versions of the FPS model.

This new pump train is actually part of the FAPCS system. The updated logic is currently included in the FPS fault tree to simplify updating the model. The function was previously almost entirely completed within the FPS system (water source, pump, piping), and the updated fault tree logic was in the FPS fault tree. The only part of the updated design still considered FPS equipment is the suction source for the pump. In future model revisions, the LPCI function will be modeled as part of the FAPCS system.

22.4.16.2.2 Ancillary Diesel Generators

Power dependencies for the four FPS pumps have not changed. There are two diesel driven fire pumps and two motor driven fire pumps. The new pump however receives its power from the Ancillary Diesel Generators. Logic transfers to the ADG fault trees have been added to the new fault tree logic for the dedicated LPCI pumps. For specific details of the ADG system see section 22.4.14.

22.4.16.2.3 Manual Alignment Enhancement

Spool piece installation to connect to pipe sections was required in the previous FPS design details. Both PRA modeled functions (Pool makeup, and LPCI) require alignment of flow paths not used. This design detail meant operators had to not only open manual valves to align the system, but install a piping section to ensure success. The design update dictates that the piping section be permanently installed segments. This reduces the burden on operators to successfully complete the required actions to put the system in service.

This change does not impact the PRA model. The spool piece installation was assumed to be part of the set actions required to align the system for the modeled functions (install spool piece, start pump, open necessary manual valves). The following actions in the model required the multiple steps.

U43-XHE-FO-LPCI - Operator fails to actuate U43 in LPCI mode

U43-XHE-FO-MAKEUP - Operator fails to actuate U43 in makeup mode (Pool Makeup)

The listed actions are still in the model. The only difference is what is required by operators to complete the actions. Though the change makes operating the system considerably easier for operators, the change does not impact the PRA modeled logic at all.

22.4.16.3 Overall Impact on PRA Results

The fault tree logic for the FPS function of ICS/PCCS pool makeup has not been changed at all. There are no changes between the Revision 2 and Revision 3 PRA model for this function.

The LPCI fault tree has been changed considerably to account for the design change. The results of the change however have a very small quantitative impact. Tables 22.4.16-1 and 22.4.16-2 show the cutsets for LPCI (VM-TOPINJ) from both Revisions. Reviewing the cutsets shows that the results from both are very similar. The top three cutsets are the same for both the

current and previous revision. In both cases, the top three cutsets account for over 98% of the total, and 7 of the top 10 cutsets are the same for both cases. In both cases the results are dominated by human action and single failure events. The numeric results for the cases are almost identical; Loss of LPCI in Revision 3 is 3.34E-1, while Revision 2 is 3.32E-1.

Having one pump available for LPCI instead of four causes the loss of some redundancy for the function. However, the system had and still has only one flow path and that path has five individual single failure points (valve failures). The loss of redundancy is not reflected in the results. Additionally, the function still requires operator actions and those actions are still the dominant failure contributors.

22.4.16.4 Conclusions

Two PRA functions are modeled for the FPS in the ESBWR PRA. There are essentially no differences between Revision 2 and Revision 3 for modeling of the IC/PCCS Pool Makeup function. The design and fault tree for the LPCI function have had extensive changes for the Revision 3 model. The impact of the changes on the system and overall risk is negligible. Though the design was changed considerably, the factors that contributed most to the risk have remained unchanged.

Table 22.4.16-1

FPS Revision 3 Cutsets

Revision 3 FPS Cutsets - VM-TOPINJ				
#	Prob	%	Event	Description
1	1.61E-01	48.20%	XXX-XHE-FO-DEPRESS	OPERATOR FAILS TO RECOGNIZE NEED OF DEPRESSURIZATION
2	1.61E-01	88.60%	XXX-XHE-FO-LPMAKEUP	OP. FAIL TO RECG. NEED FOR LOW PRESS MAKEUP
3	4.80E-02	98.70%	G21-BV_-RE-F334	MISPOSITION OF VALVE F334
4	2.00E-03	99.10%	U43-MP_-FS-PLP	MOTOR-DRIVEN LPI PUMP FAILS TO START
5	1.61E-03	99.30%	U43-XHE-FO-LPCI	OPERATOR FAILS TO ACTUATE U43 IN LPCI MODE
6	1.00E-03	99.60%	R21-ANCILLARYA	ANS DG FAILURE
7	6.00E-04	99.70%	U43-MP_-FR-PLP	MOTOR-DRIVEN LPI PUMP FAILS TO RUN
8	4.00E-04	99.80%	U43-BV_-CC-F346	MANUAL VALVE FAILS TO OPEN
9	4.00E-04	99.90%	U43-UV_-CC-F347	CHECK VALVE F347 FAILS TO OPEN
10	4.00E-04	99.90%	U43-UV_-CC-FU438	LPI DISCHARGE CHECK VALVE FAILS TO OPEN

Table 22.4.16-2

FPS Revision 2 Cutsets

Revision 2 FPS Cutsets - VM-TOPINJ				
#	Prob	%	Event	Description
1	1.61E-01	48.20%	XXX-XHE-FO-DEPRESS	OPERATOR FAILS TO RECOGNIZE NEED OF DEPRESSURIZATION
2	1.61E-01	88.60%	XXX-XHE-FO-LPMAKEUP	OP. FAIL TO RECG. NEED FOR LOW PRESS MAKEUP
3	4.80E-02	98.70%	G21-BV_-RE-F334	MISPOSITION OF VALVE F334
4	1.61E-03	99.10%	U43-XHE-FO-LPCI	OPERATOR FAILS TO ACTUATE U43 IN LPCI MODE
5	4.00E-04	99.40%	U43-BV_-CC-F346	MANUAL VALVE FAILS TO OPEN
6	4.00E-04	99.50%	U43-BV_-CC-FU439	MANUAL VALVE FAILS TO OPEN
7	4.00E-04	99.60%	U43-UV_-CC-F347	CHECK VALVE F347 FAILS TO OPEN
8	4.00E-04	99.70%	U43-UV_-CC-FU438	LPI DISCHARGE CHECK VALVE FAILS TO OPEN
9	1.00E-04	99.80%	B21-UV_-CC-F102A	CHECK VALVE F102A IN FEEDWATER LINE A FAILS TO OPEN
10	1.00E-04	99.90%	B21-UV_-CC-F103A	CHECK VALVE F103A IN FEEDWATER LINE A FAILS TO OPEN

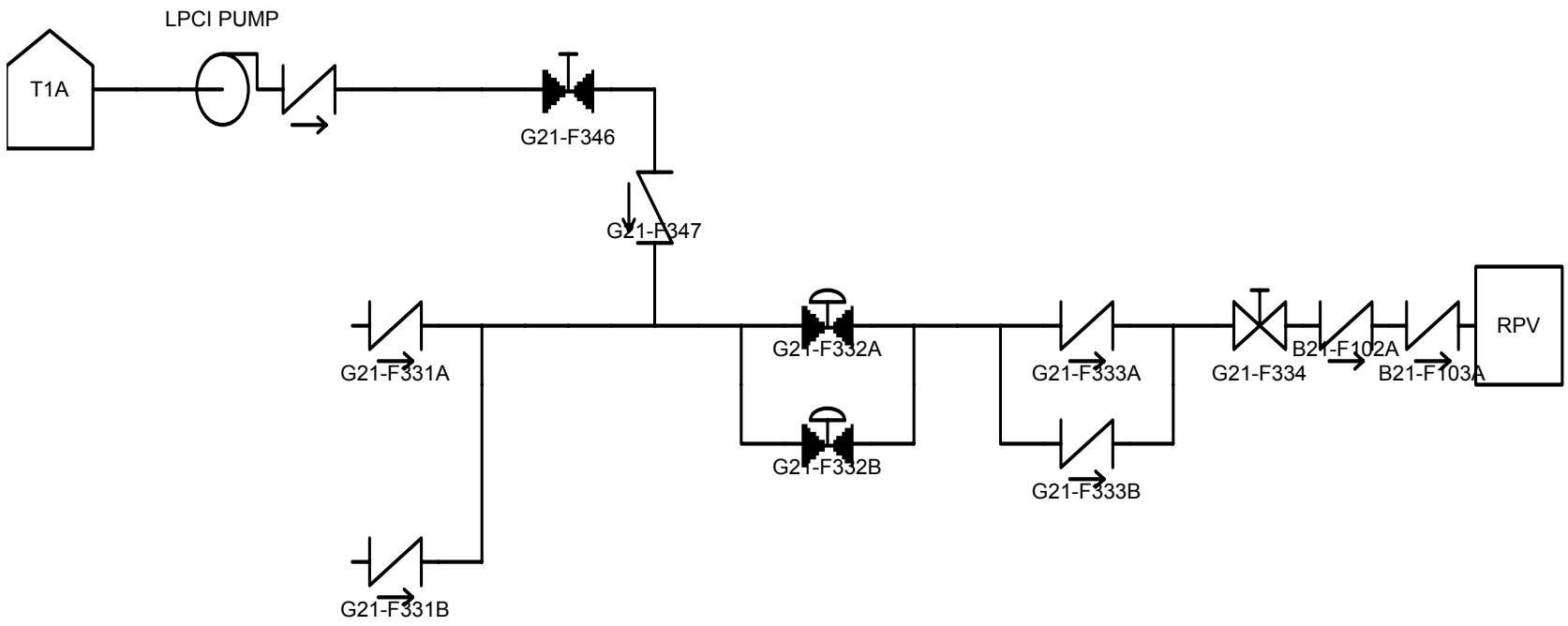

Figure 22.4.16-1
Revised LPCI Simplified Diagram

22.4.17 Direct Current Power Supply System

22.4.17.1 Overview

There are no design changes in the Direct Current Power Supply System that affect the Revision 2 PRA system model.

22.4.18 Containment System

22.4.18.1 Overview

There are a few changes in the containment system design and potential modeling changes that do not have a significant effect on the PRA results. The most significant change is in the design of the vacuum breaker isolation valves; the change is fairly extensive and has the potential to yield slightly different results. The changes to containment system design that impact the PRA are as follows:

1) Containment venting has been made independent of other plant systems but remains a manual-only action
2) The vacuum breaker isolation valves (VBIV) have been specified as normally open, nitrogen operated valves with individual, independent control systems
3) The DPS signal for ICS containment isolation valves has been removed

The following containment system PRA changes are model enhancements that were not driven by design changes:

1) Automatic isolation of the MSIVs by the DPS is now modeled
2) An N-DCIS control signal was developed for the nonsafety-related RWCU/SDC valves that are credited in the BOC-RWCU isolation (F004A/B and F044A/B)

It is shown that key PRA insights remain unchanged.

22.4.18.2 System Changes

System model changes are described below; results impact is shown in section 22.4.18.3.

22.4.18.2.1 Containment Venting

The containment venting function has been developed in more detail for DCD Rev 5. The previously modeled dependence on instrument air and Q-DCIS no longer exists; all vent valve operation is now from local manual actuation with pressurized air or nitrogen bottles. This improved the as-modeled containment venting reliability significantly because many core damage sequences feature either common cause failure of Q-DCIS software or a loss of instrument air. Also, venting will now direct the exhaust directly to the RB stack through a hardened vent instead of the RB ventilation system (RBVS). The new vent path has no effect on the PRA because the function will still require two normally closed air-operated valves to open in series. There is no change to the modeled operator action.

22.4.18.2.2 Vacuum Breaker Isolation Valves

The Revision 2 PRA modeled normally closed passively actuated check valves as the VB isolation valves. For DCD Revision 5 a new VBIV has been designed as normally open, nitrogen operated valves with dedicated, independent control systems. Each isolation valve has its own independent, non-programmable logic chassis to avoid the issues associated with postulated common cause inadvertent actuation of programmable digital control systems.

A LOCA permissive that trips on high drywell temperature allows operation of the VBIV control logic. The control circuit for each VBIV uses thermocouples mounted in various positions as described in DCD sections 6.2.1.1.2 and 7.3.6. If the logic detects leakage, the VBIV is automatically closed and remains closed with the ability for remote manual operation from the MCR; no credit for operator manipulation of the VBIV is taken in the PRA.

In addition, a secondary leakage detection logic scheme exists that uses a combination of thermocouples and proximity sensors mounted directly in the VB seat. Only the primary, thermocouple-only detection logic is modeled in the PRA because the thermocouple failures will also fail the secondary actuation signal. If the proximity sensors fail to indicate open the primary thermocouple-only logic will still isolate a leaking VB; modeling the primary signal only captures all necessary failure modes.

Four divisions of safety-related UPS are provided to each valve to ensure power availability under the widest spectrum of accident scenarios.

The following assumptions were made with respect to modeling the new vacuum breaker isolation valves:

1) The VBIV logic cabinets will be located in separate fire areas such that a fire in a single fire area can only fail one VBIV
2) Operator recovery of automatic actuation failure and inadvertent VB isolation is not credited in the PRA
3) The VBIV logic hardware for each valve is independent of the other two VBIV logic cabinets; a logic failure can only affect its one associated VBIV

The fault tree for the VBIV model change is shown in Figure 22.4.18-1, which is a complete representation of top gate DS-TOPVB (Steam Suppression Fails). The tree is shown without the common cause failure tool applied; this makes the tree easier to read and much shorter. The common cause modeling associated with the new VBIV is summarized in Table 22.4.18.2.2-1.

The upper level logic for top gate DL-TOPVB (Failure to Isolate All VB Leakage) is shown in Figure 22.4.18-2; gates used below what is shown are identical to those shown in Figure 22.4.18-1.

Table 22.4.18.2.2-1

CCF Modeling for Vacuum Breaker Isolation Valves

CCF Group Name	Description
T10-ACV-OO-VBISV	Contains the three nitrogen-operated VBIV; models the "fail to close" failure mode. Combinations of two and three (which is all) component failures are modeled.
T10-LOG-FC-VBISV	Contains the three logic cabinets that control the VBIV; models the "fail to function" (fail to actuate VB isolation) failure mode. Combinations of two and three (which is all) component failures are modeled.
T10-TT_-NO-VBISV	Contains all 12 of the thermocouples distributed amongst the three vacuum breaker assemblies (one per division, four divisions per VB); models the "fail to respond to change in temperature" failure mode. Combinations of two, three, and all thermocouples are modeled.
T10-UV_-OO-VBISV-ACCUM	Contains the three VBIV nitrogen accumulator check valves; models the "fail to close" failure mode (upon loss of normal HPNSS supply). Combinations of two and three (which is all) component failures are modeled.
T10-VB_-CC	Contains the three primary vacuum breakers. Models the "fail to open" failure mode. Combinations of two and three (which is all) component failures are modeled. This group is unchanged from the Revision 2 system PRA model.

22.4.18.2.3 DPS Signal for MSIV Isolation

Revision 2 of the PRA only modeled the RPS signal for MSIV isolation. The DPS function for MSIV isolation has been added to the Revision 3 model; this signal provides independent, redundant isolation signal to the MSIVs based on the same set of conditions as the RPS isolation. This change should help lower the frequency of Class V core damage sequences and containment bypass release scenarios.

22.4.18.2.4 DPS Signal Removed from ICS Containment Isolation Valves

The DPS function to back up Q-DCIS for ICS isolation has been removed because of the potential for inadvertent DPS isolation to fail the ICS. This potential adverse systems interaction has been addressed in DCD Revision 5 and has been taken out of the PRA accordingly. In Revision 2 of the PRA the %BOC-IC initiating event (break outside containment in ICS) had very little contribution to CDF / nTSL, so expected impact is negligible.

22.4.18.2.5 RWCU/SDC Nonsafety-Related Isolation Valve Signal

The nonsafety-related RWCU/SDC isolation valves G31-F004A/B and G31-F044A/B were controlled by DPS in the Revision 2 PRA because of a lack in design detail. Revision 3 of the PRA models N-DCIS signal for these valves, which provides an additional level of diversity and redundancy for isolating breaks outside containment in RWCU/SDC. The expected impact is a reduction in class V core damage sequences and BOC release category frequency.

22.4.18.3 Results Impact

The Revision 2 Level 1 and Level 2 baseline, internal events models were quantified with the Revision 3 containment system changes to assess the impact on results and insights. The results with the containment system changes incorporated are compared to the current results in Table 22.4.18.3-1.

The changes are not significant; the reduction in conditional containment failure probability (CCFP) and nTSL release frequency are most noticeable. Much of the CDF reduction was in nTSL cutsets related to vacuum breaker isolation valves failing to open (they were normally closed in the Revision 2 internal events model). The increase in RWCU/SDC isolation reliability during breaks outside containment and diverse MSIV isolation further lowered non-TSL frequency. Another source of nTSL reduction was the containment venting change, which removed significant system dependencies upon instrument air and Q-DCIS.

The quantification was performed with a truncation value of 1E-15/yr.

Table 22.4.18.3-1

PRA Results Impact

Case	CDF (/yr)	nTSL (/yr)	CCFP*
Baseline Model	1.221E-8	9.616E-10	0.079
T10 Changes	1.208E-8	8.325E-10	0.069
Change	**-1.1%**	**-13.4%**	**-12.8%**

*Conditional Containment Failure Probability (nTSL/CDF)

22.4.18.3.1 Qualitative Assessment of External Events Impact

The only containment system change that affects spatial arrangement of equipment is the addition of vacuum breaker isolation valve logic components outside the DW. Assuming that the VBIV control logic platforms are located separately in three of the four safety-related divisional reactor building rooms, a single fire could disable at most one VB isolation valve. The only case in which the isolation valve change could potentially show an increase in results is the Fire analysis because PCCS, which is failed by a single leaking vacuum breaker, is the only form of containment heat removal. A sensitivity study was performed to further understand this effect in Section 22.12.

The containment venting change, which removed the dependency on instrument air, has reduced the impact of fires that fail IAS.

There are no internal flooding sources in the reactor building divisional areas (flood area RB-6400); no impact on the flooding PRA is anticipated.

All components associated with the containment system changes are located in the reactor building, which is seismic category 1 and not affected by the strongest of high winds. As such, no high winds PRA results impacts are expected.

22.4.18.4 Conclusion

The changes to the containment system have generally increased system reliability and lowered both the CDF and nTSL release frequency; the CCFP is also decreased.

None of the key risk insights listed in DCD Section 19 are impacted as a result of the containment system changes.

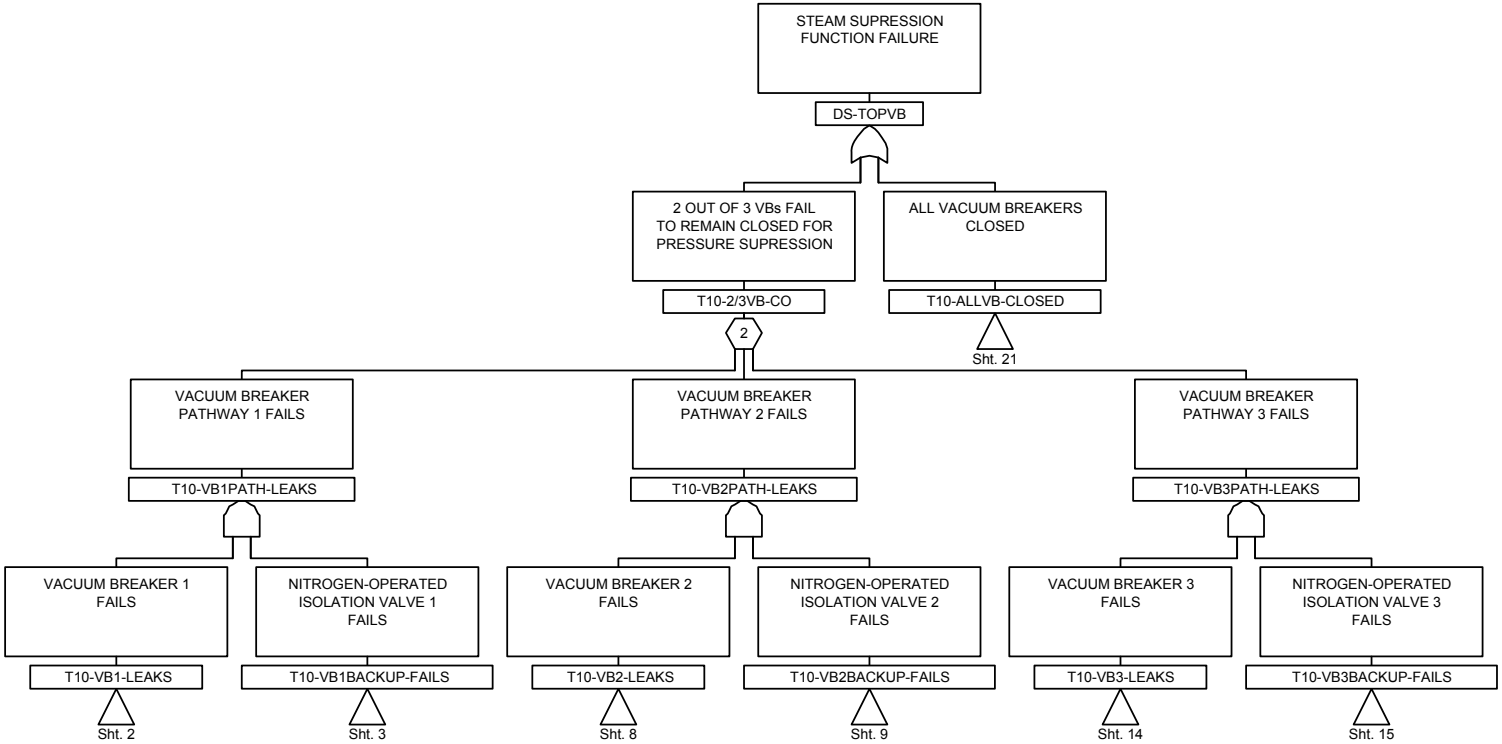

Figure 12.4.18-1 Top Gate DS-TOPVB

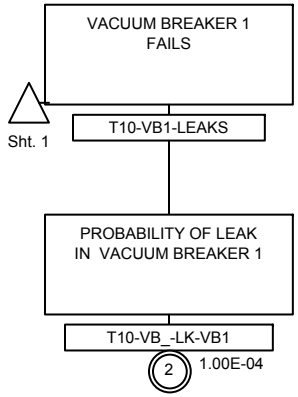

Figure 22.4.18-1 Sheet 2 Top Gate DS-TOPVB

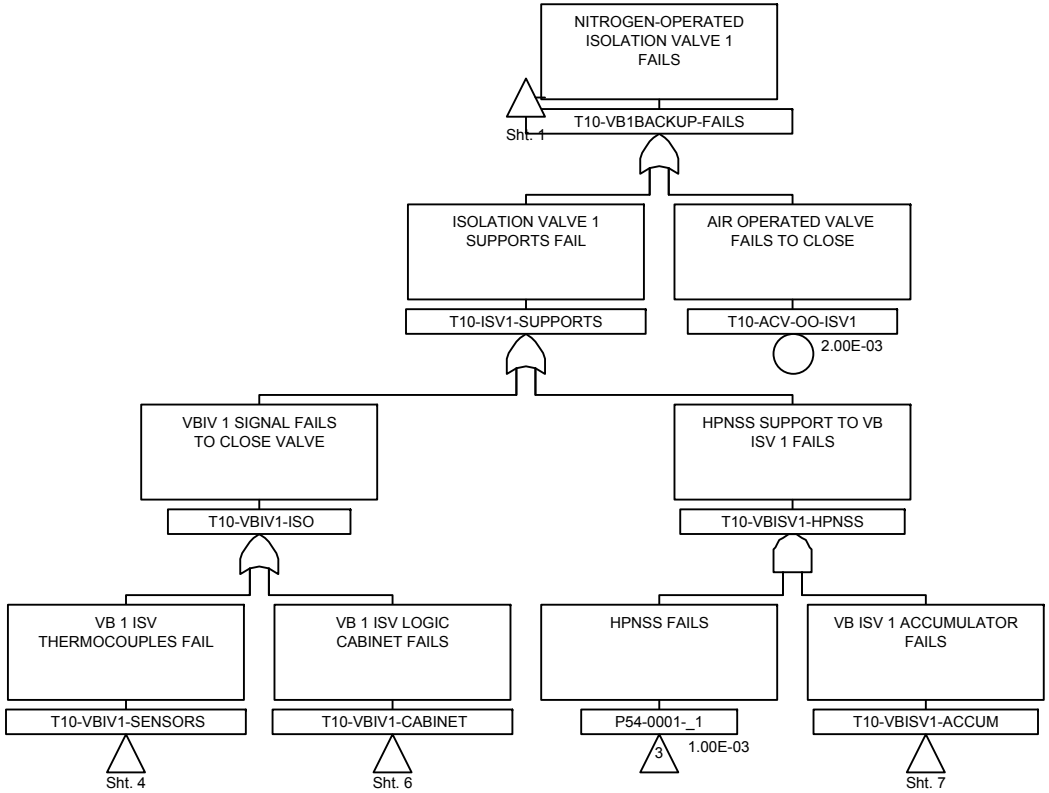

Figure 22.4.18-1 Sheet 3 Top Gate DS-TOPVB

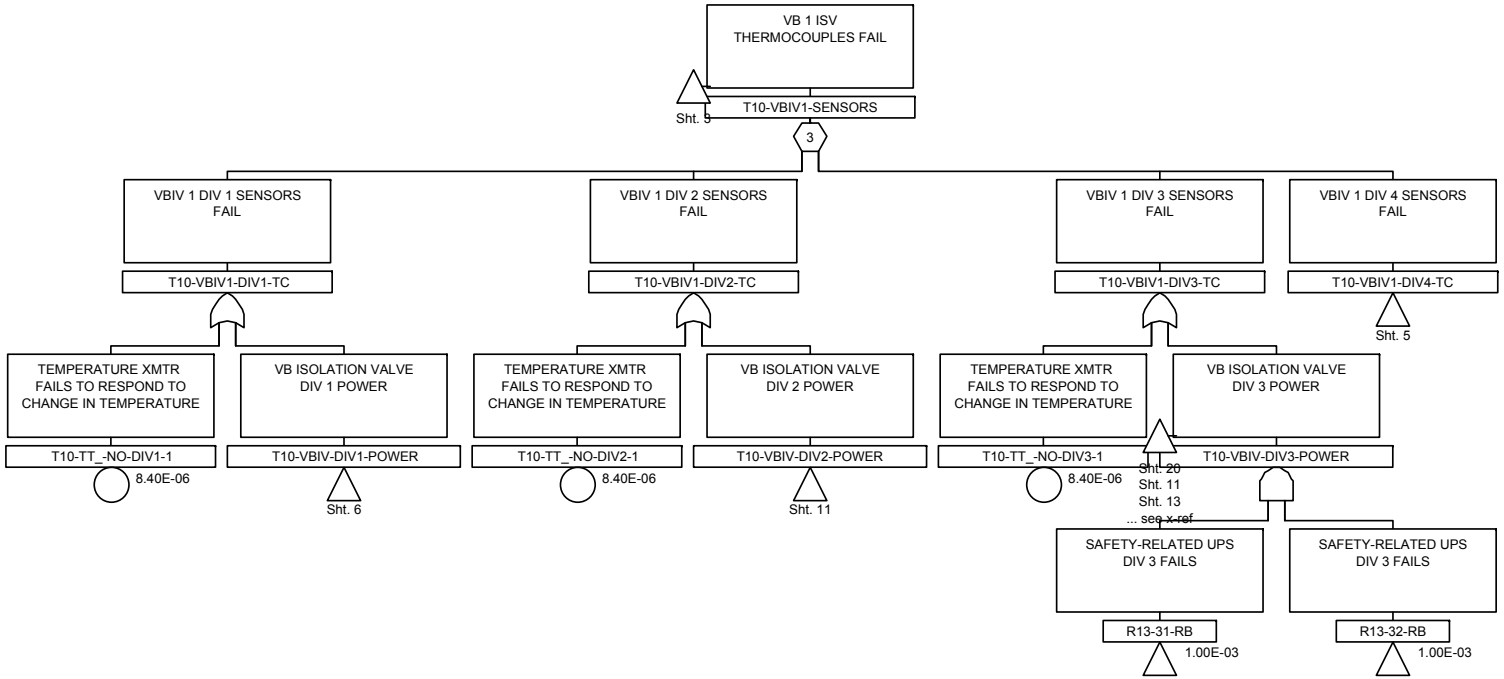

Figure 22.4.18-1 Sheet 4 Top Gate DS-TOPVB

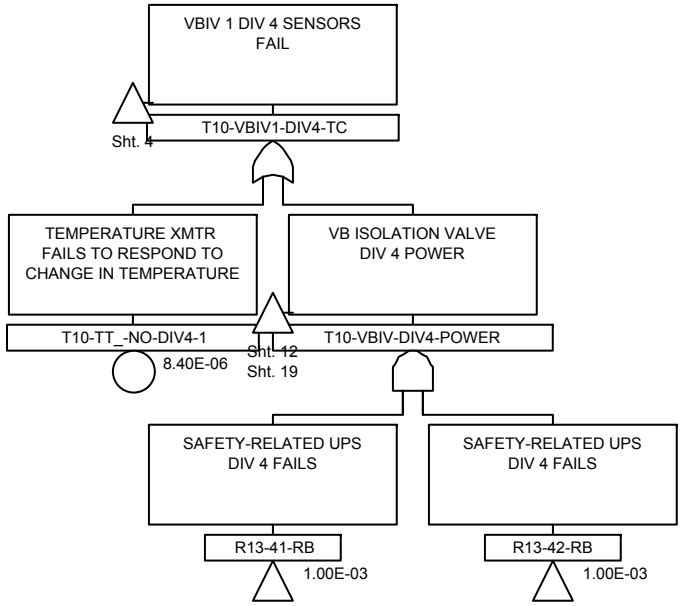

Figure 22.4.18-1 Sheet 5 Top Gate DS-TOPVB

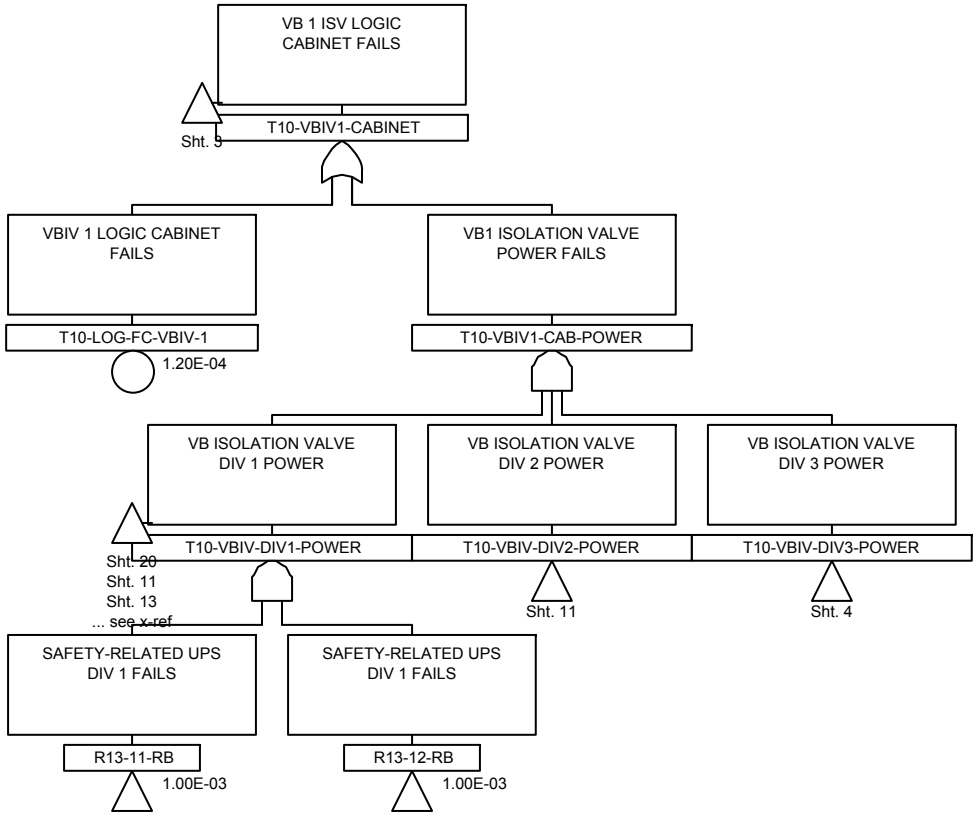

Figure 22.4.18-1 Sheet 6 Top Gate DS-TOPVB

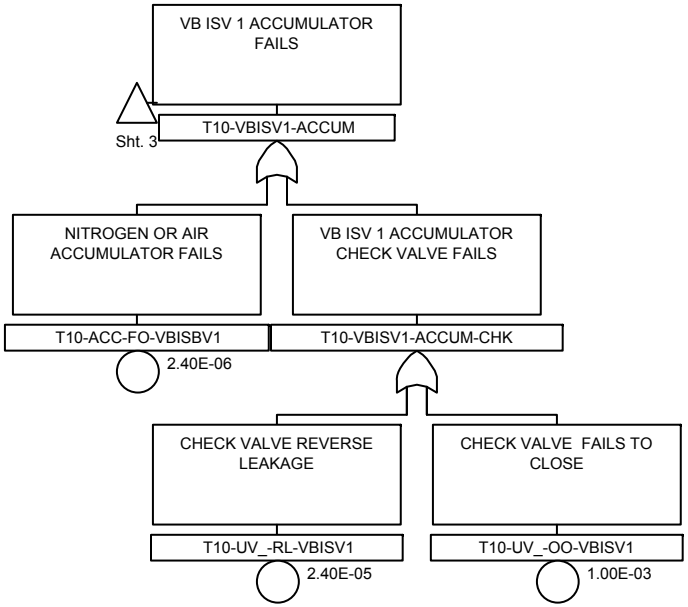

Figure 22.4.18-1 Sheet 7 Top Gate DS-TOPVB

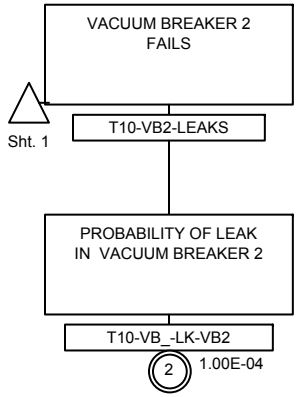

Figure 22.4.18-1 Sheet 8 Top Gate DS-TOPVB

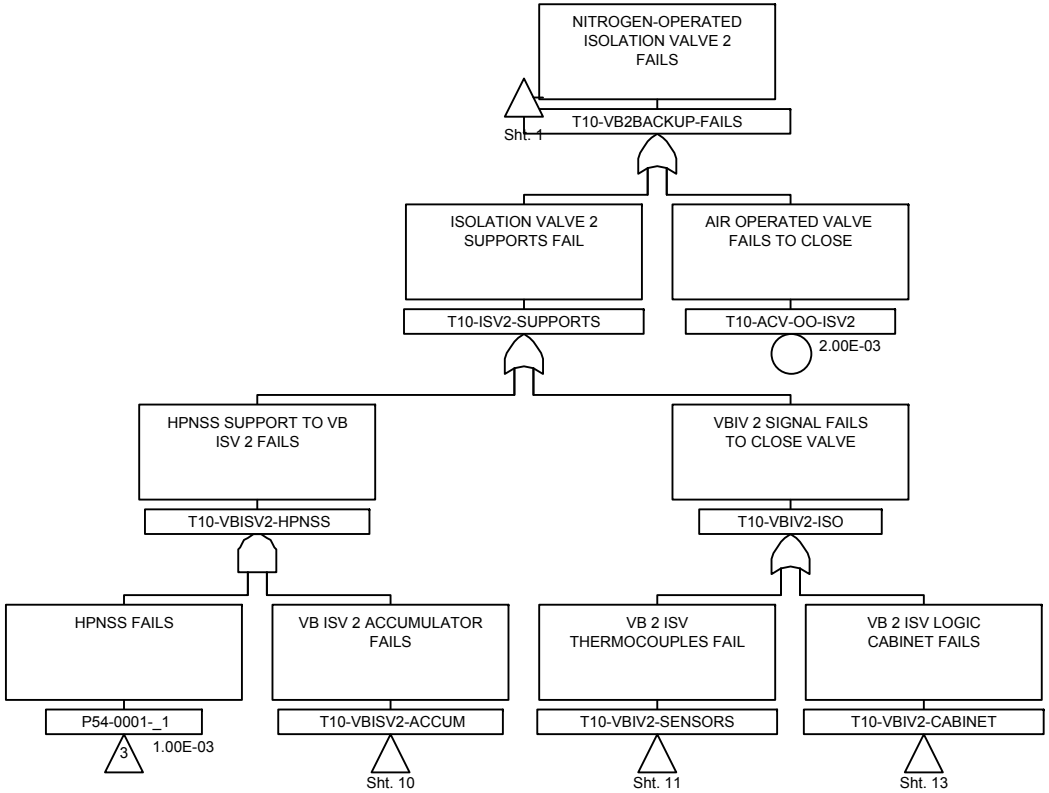

Figure 22.4.18-1 Sheet 9 Top Gate DS-TOPVB

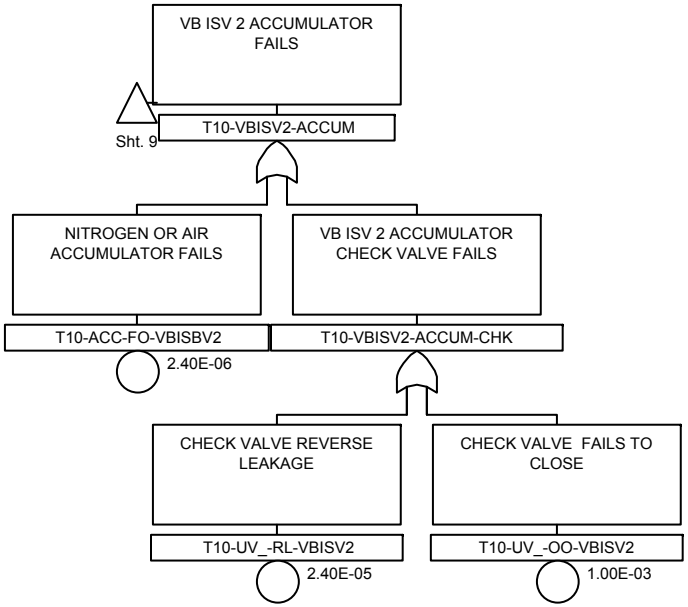

Figure 22.4.18-1 Sheet 10 Top Gate DS-TOPVB

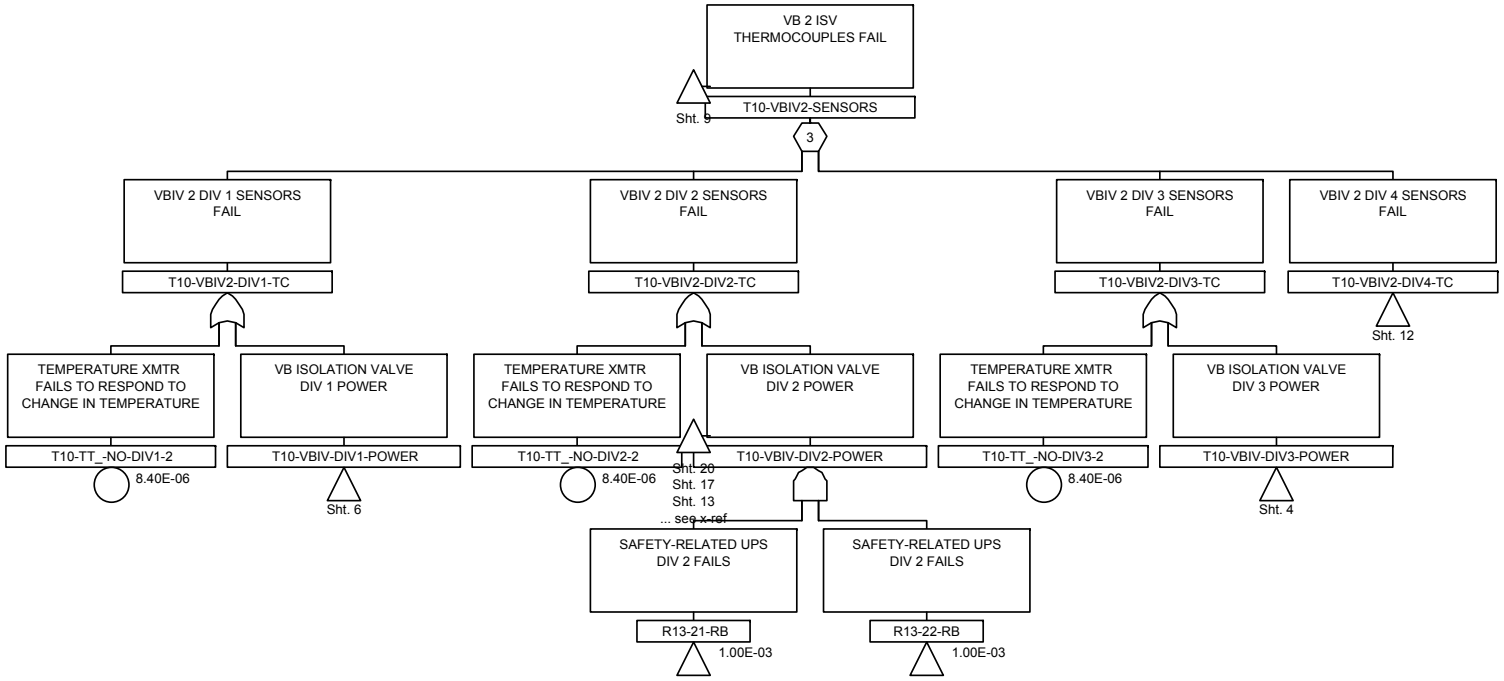

Figure 22.4.18-1 Sheet 11 Top Gate DS-TOPVB

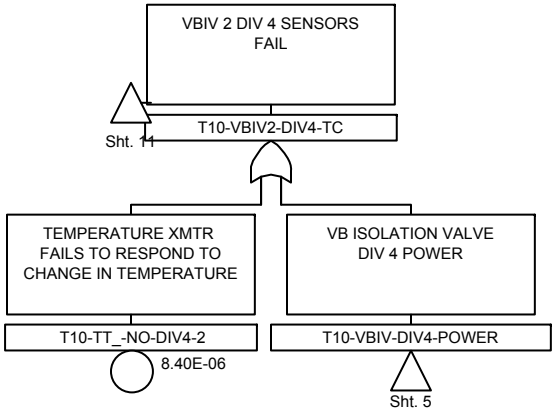

Figure 22.4.18-1 Sheet 12 Top Gate DS-TOPVB

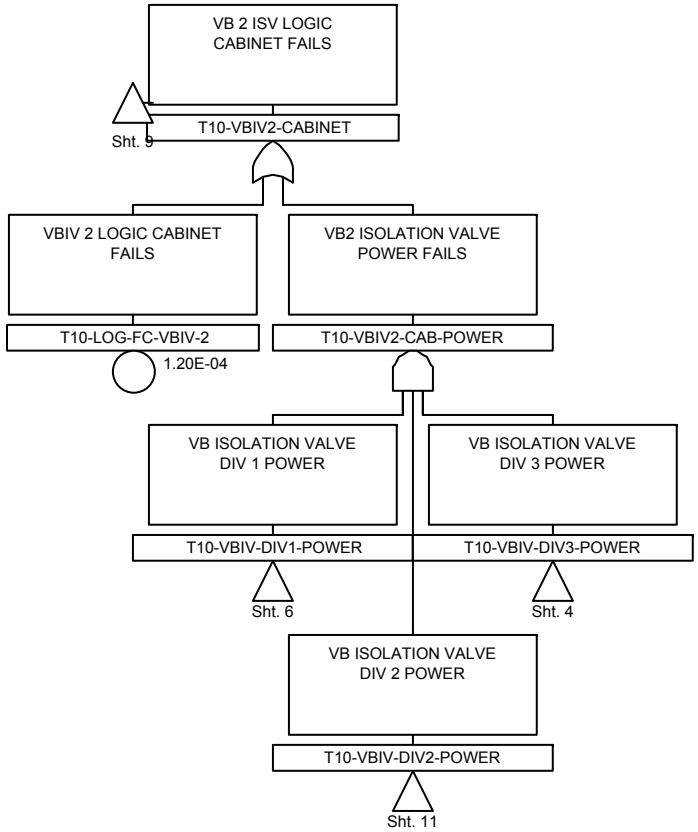

Figure 22.4.18-1 Sheet 13 Top Gate DS-TOPVB

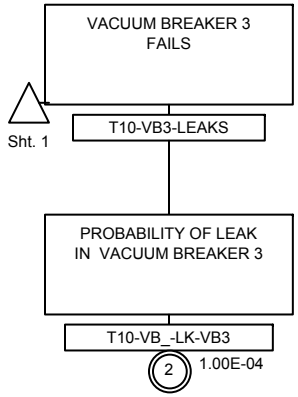

Figure 22.4.18-1 Sheet 14 Top Gate DS-TOPVB

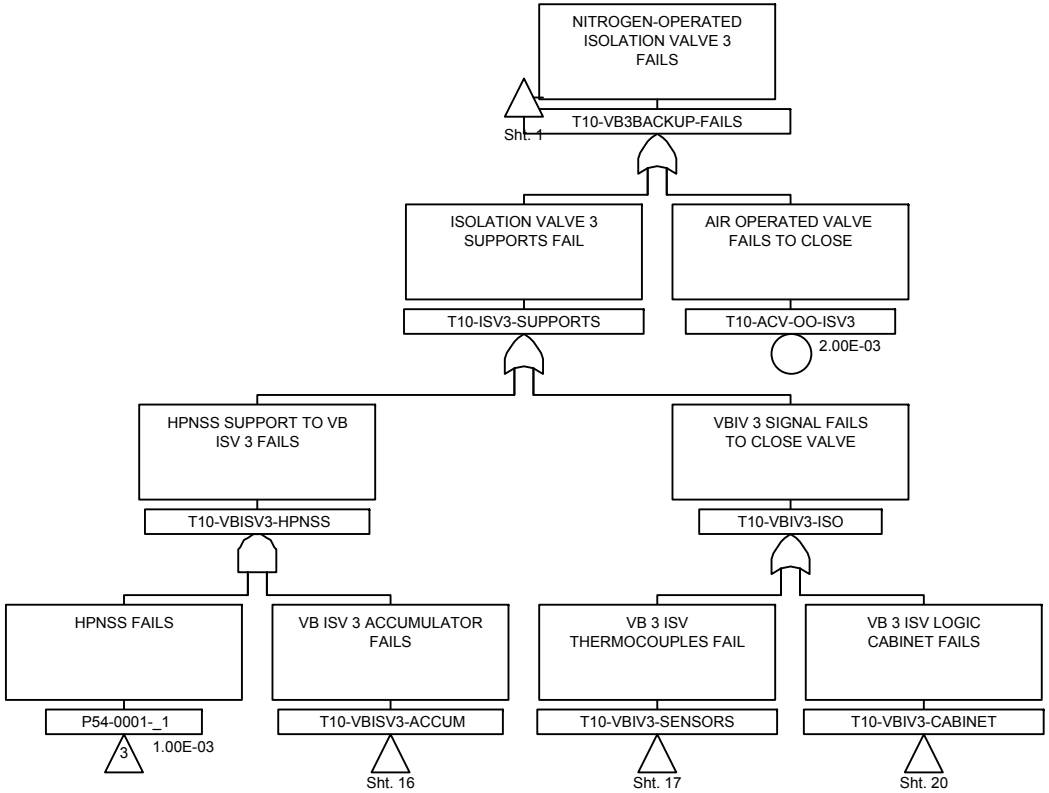

Figure 22.4.18-1 Sheet 15 Top Gate DS-TOPVB

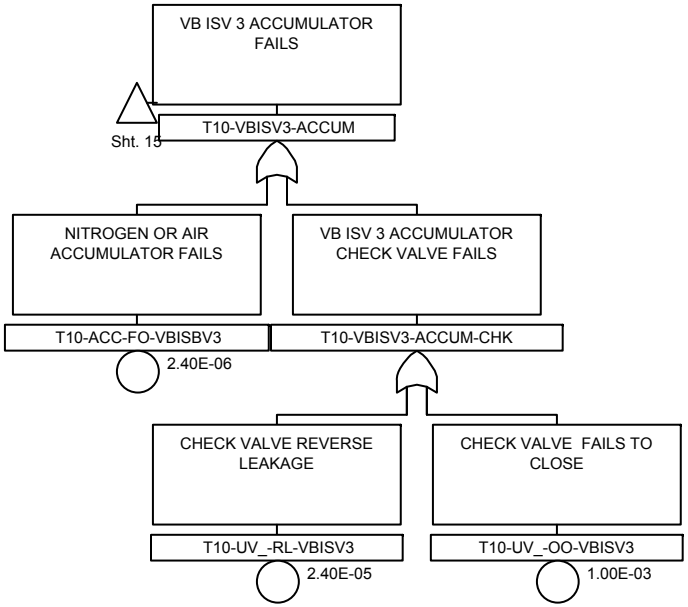

Figure 22.4.18-1 Sheet 16 Top Gate DS-TOPVB

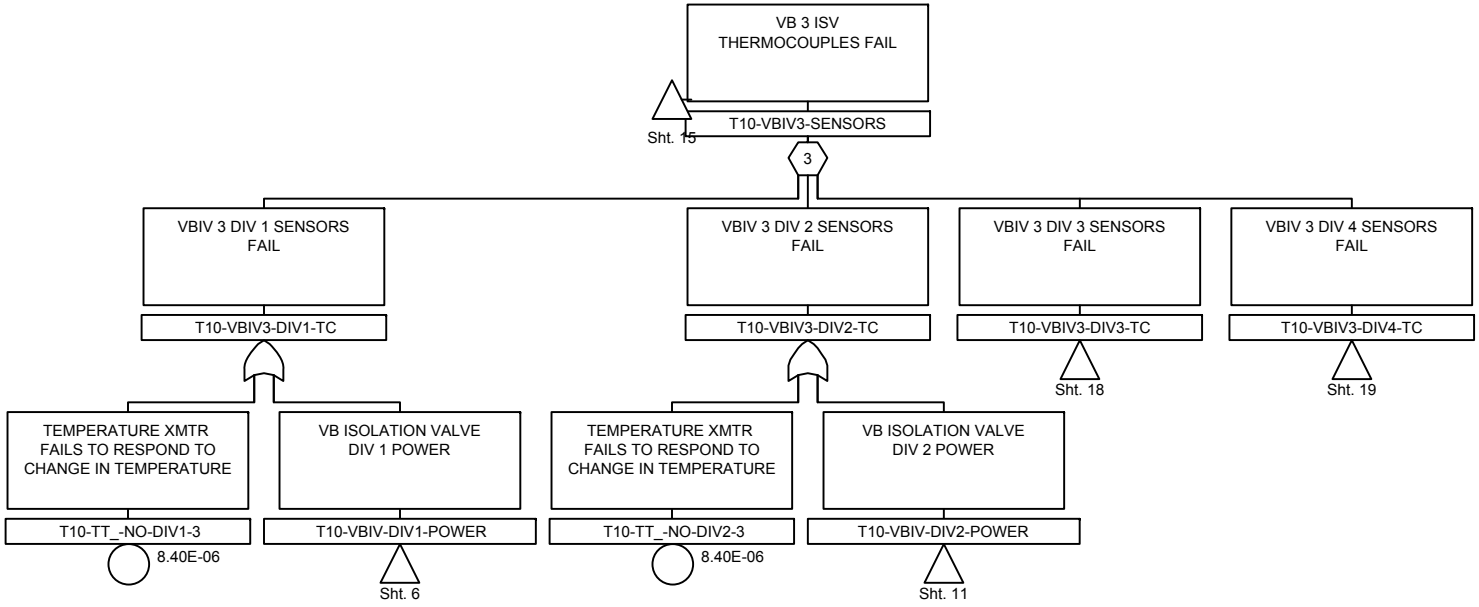

Figure 22.4.18-1 Sheet 17 Top Gate DS-TOPVB

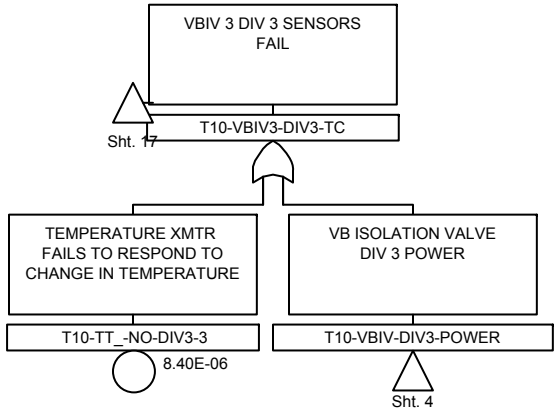

Figure 22.4.18-1 Sheet 18 Top Gate DS-TOPVB

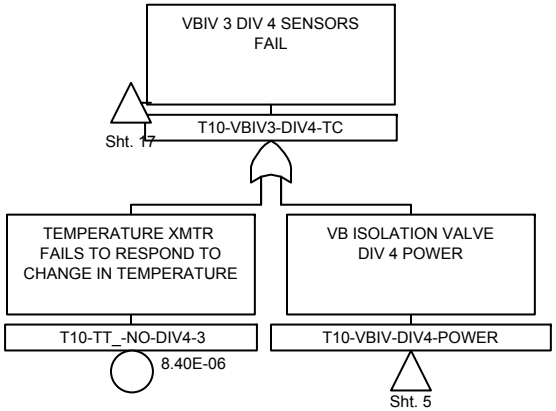

Figure 22.4.18-1 Sheet 19 Top Gate DS-TOPVB

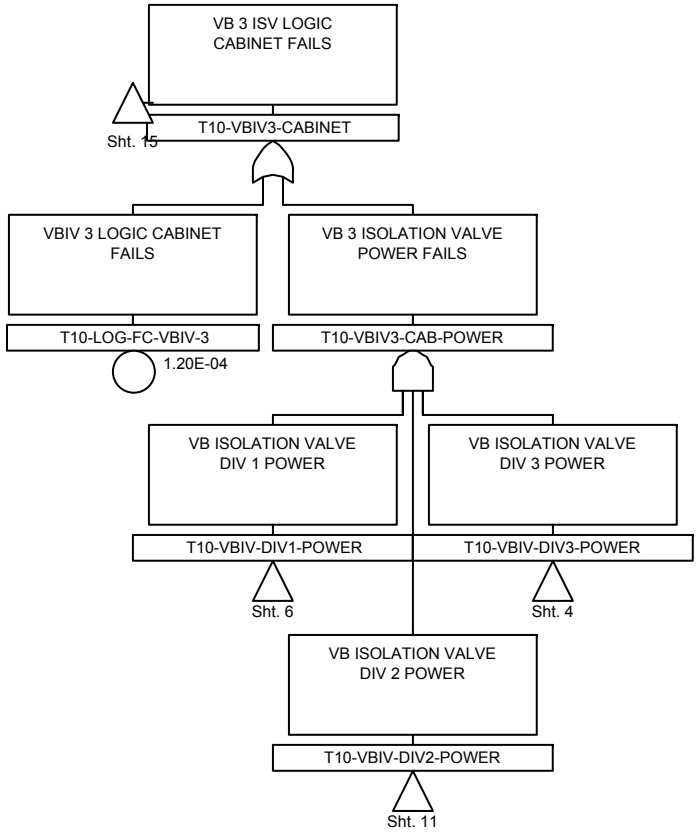

Figure 22.4.18-1 Sheet 20 Top Gate DS-TOPVB

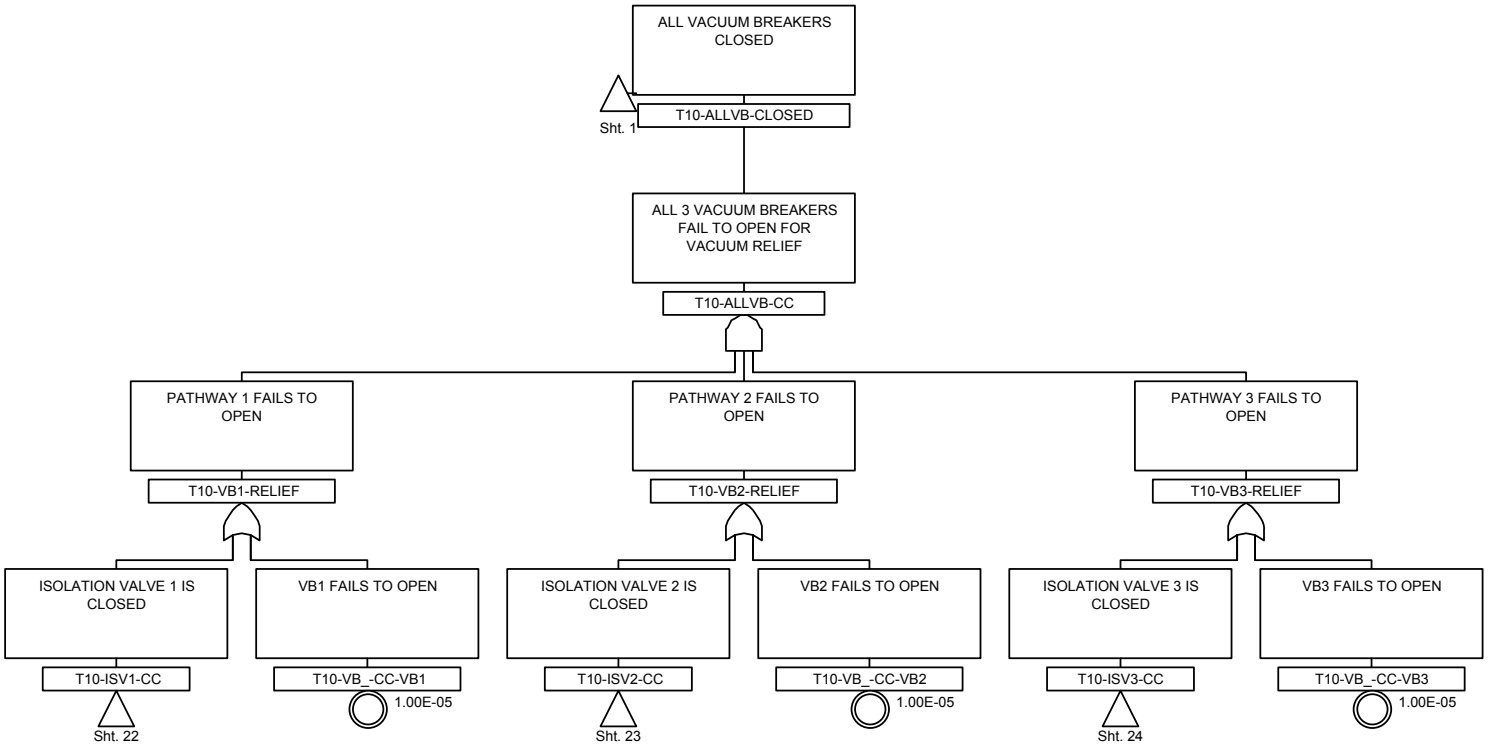

Figure 22.4.18-1 Sheet 21 Top Gate DS-TOPVB

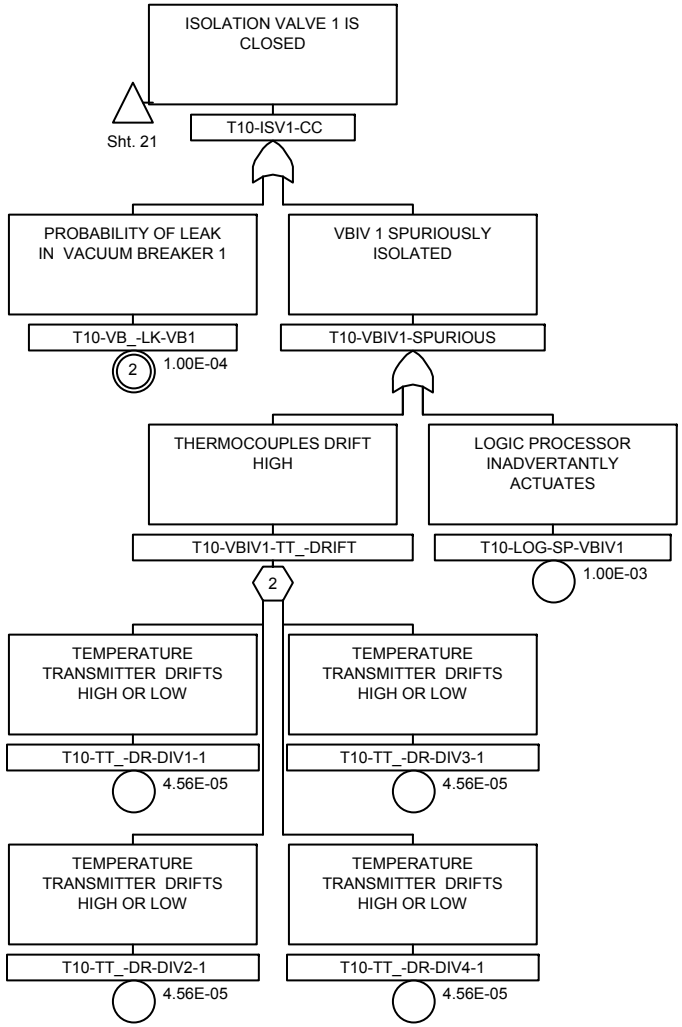

Figure 22.4.18-1 Sheet 22 Top Gate DS-TOPVB

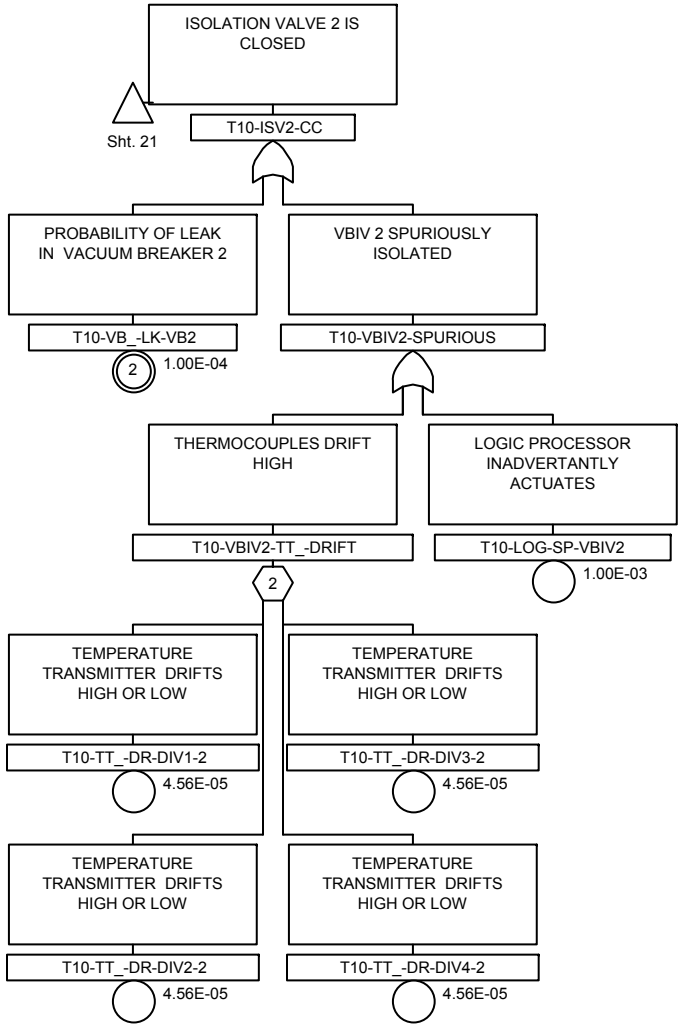

Figure 22.4.18-1 Sheet 23 Top Gate DS-TOPVB

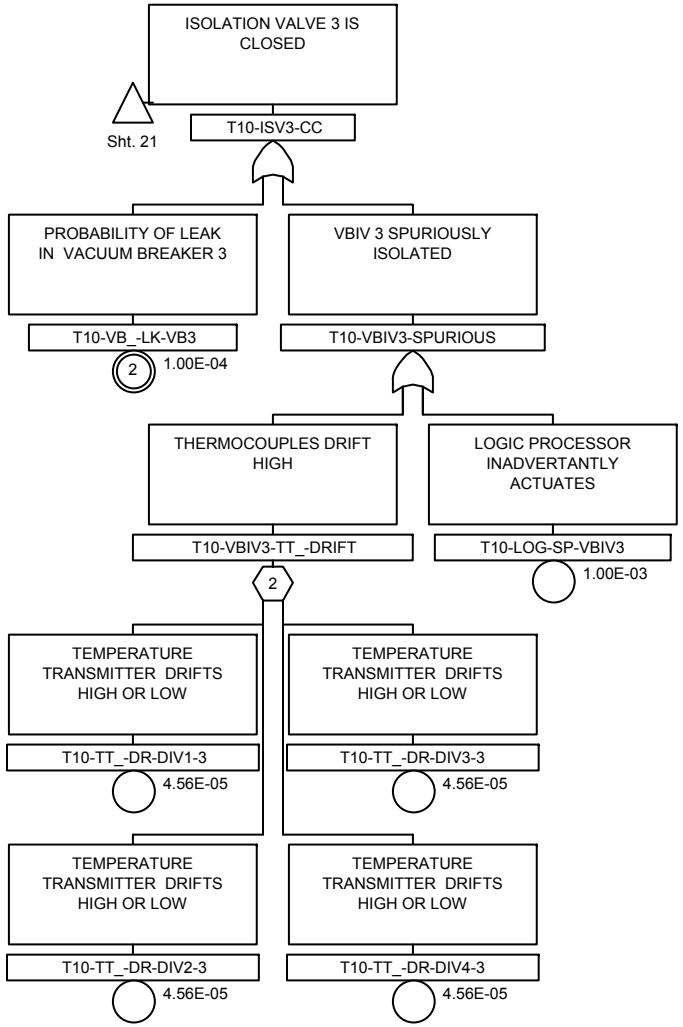

Figure 22.4.18-1 Sheet 24 Top Gate DS-TOPVB

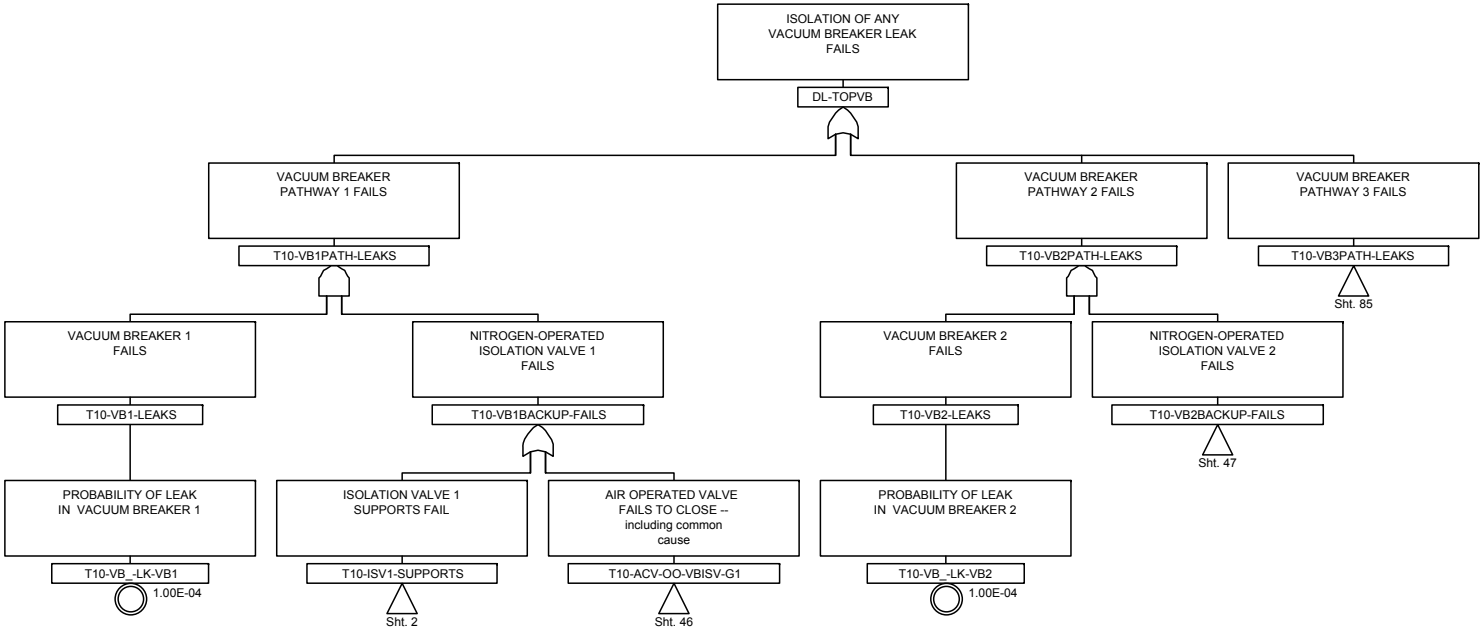

Figure 22.4.18-2 Top Gate DL-TOPVB Top Logic

22.4.19 Passive Containment Cooling System

22.4.19.1 Overview

There are no changes in the Passive Containment Cooling System that affect the Revision 2 PRA system model.

22.4.19.2 Description Of Changes

The design now includes fans installed in the vent lines to force flow through the PCCS condensers. The fans have been included to rapidly reduce the pressure in containment in design basis accidents. The DCD Chapter 6 analyses show that this function is not required to prevent containment design pressure from being reached until 72 hours following the most limiting DBA LOCA. The limiting assumptions include the maximum allowable leakage from DW to WW and non-mechanistic stratification in the WW airspace.

22.4.19.3 Evaluation of Changes

This scenario does not impact the PRA for two reasons:

(1) The PRA success criteria for the containment is based on the lower limit of the containment ultimate pressure fragility curve; exceeding the design pressure is not considered a failure,

(2) The vacuum breaker leakage data used in the PRA is based on either leakage or no leakage; no credit is taken for partial failures that are acceptable from an "allowable leakage" perspective. Thus, any leakage is either isolated or the vacuum breaker is considered completely failed.

The bounding design basis accident from a DW pressure standpoint is the main steam line break (MSLB). As shown in DCD Figure 6.2-14a1, the containment pressure, even with the maximum allowable leakage from DW to WW, is well below the containment ultimate failure pressure of approximately 1MPa at 72 hours. If the conditions present at that time are assumed to remain and no additional mitigation of DW pressure increase is activated, the DW pressure does not reach containment ultimate pressure until approximately 30 days after the initiating event.

Inadvertent actuation of the fan system would only promote flow through the PCCS; this is not considered a failure.

22.4.20 References

22.4-1 ESBWR Design Control Document/Tier 2, Chapter 1 Introduction and General Description of Plant, 26A6642AD, Rev. 05

22.4-2 ESBWR Design Control Document/Tier 2, Chapter 5 Reactor Coolant System and Connected Systems, 26A6642AR, Rev. 05

22.4-3 ESBWR Design Control Document/Tier 2, Chapter 6 Engineered Safety Features, 26A6642AT, Rev. 05

22.4-4 ESBWR Design Control Document/Tier 2, Chapter 7 Instrumentation and Control Systems, 26A6642AW, Rev. 05

22.4-5 ESBWR Design Control Document/Tier 2, Chapter 8 Electric Power, 26A6642AX, Rev. 05

22.4-6 ESBWR Design Control Document/Tier 2, Chapter 9 Auxiliary Systems, 26A6642AY, Rev. 05

22.4-7 ESBWR Design Control Document/Tier 2, Chapter 10 Steam and Power Conversion System, 26A6642BF, Rev. 05

22.4-8 ESBWR Design Control Document/Tier 2, Chapter 16 Technical Specifications, 26A6642BR, Rev. 05

22.5 DATA ANALYSIS

The methodology for the data analysis and common cause failure modeling described in Section 5 is still applicable to Revision 3 of the PRA; no changes to the analysis process have been made.

System model changes related to data usage and common cause failure modeling are captured in the respective system documentation in section 22.4.

22.5.1 Type Code Addition

One type code was added to the ESBWR master PRA database to account for a design change in the ICS (Section 22.4.18). All nitrogen motor-operated valves located inside the containment were changed to hydraulic operators to reduce nitrogen discharge into the drywell. This design change required a new type code, shown in Table 22.5-1. The data source is NUREG/CR-4550 Volume 1.

22.5.2 Common Cause Contribution to PRA Results

The contribution of CCF failure events to the ESBWR PRA results was very significant in Revision 2; Tables 22.5-2 and 22.5-3 show comparisons of Revision 2 and Revision 3 CCF event importances.

Table 22.5-2 compares the Top 10 CCF events by RAW. Various changes in importance rank have occurred, but the list was mostly unchanged. Top event changes are discussed below:

(1) Revision 2 event #2 is no longer in the model because of the vacuum breaker isolation valve (VBIV) change discussed in Section 22.4.18.

(2) Revision 2 events #9 and #10 are no longer in the Top 10 list because an electrical system design change discussed in Section 22.4.15 brought an additional three CCF events into the list. The electrical system change brought in Revision 3 events #2, #3, and #7, all of which have low Fussell-Vesely (F-V) values.

Table 22.5-3 compares CCF events with a F-V value greater than 1%. This table shows that the most significant CCF contributors to CDF remain virtually unchanged from the Revision 2 results. In both revisions there were eight CCF events with a F-V value of greater than 1%; the only changes were swapping the order of events #4/#5 and #6/#7 from Revision 2 to Revision 3.

22.5.3 Conclusion

The general methodology for the ESBWR PRA data and common cause failure analyses has not changed for Revision 3. The top CCF contributors to CDF, shown in Table 22.5-3, have remained unchanged with the exception of minor shifts in ranking. Common cause failure events with the potential to impact the PRA results, shown in Table 22.5-2, have not changed with the exception of electrical system events discussed in Section 22.5.2.

Overall, no key PRA results, insights, or assumptions have been affected by changes related to data analysis or common cause failure modeling.

Table 22.5-1

New Type Codes

Type Code	Description	Failure Rate
HOV FO	Hydraulic Valve Fails to Operate	2E-3 / demand

Table 22.5-2

Top Ten CCF Events – RAW

#	Revision 2		Revision 3	
	Event	RAW	Event	RAW
1	C12-ROD-CF-SCRAM	1310000	C12-ROD-CF-SCRAM	1480000
2	T10-UV_-CC-VBISVS_1_2_3	8780	R13-XFL-LP-CCFNSR2_ALL	14300
3	T10-VB_-CC_1_2_3	8760	R13-XFL-LP-CCFNSR2_1_2_3	13000
4	C12-AOV-CF-SCRV126	5240	C12-AOV-CF-SCRV126	6940
5	C63-CCFSOFTWARE_S	2030	T10-VB_-CC_1_2_3	5310
6	B21-SQV-CC_ALL	1300	C63-CCFSOFTWARE_S	2040
7	E50-UV_-OC_ALL	992	R13-XFL-LP-CCFNSR2_6_7_8	1470
8	E50-SQV-CC_ALL	985	E50-UV_-OC-INJ_ALL	1010
9	C62-CCFSOFTWARE	396	E50-SQV-CC-INJ_ALL	999
10	T15-FLT-PP_ALL	385	B21-SQV-CC_ALL	942

Table 22.5-3

CCF Events with F-V > 0.01

#	Revision 2		Revision 3	
	Event	F-V	Event	F-V
1	C12-ROD-CF-SCRAM	33.00%	C12-ROD-CF-SCRAM	37.30%
2	E50-UV_-OC_ALL	29.80%	E50-UV_-OC-INJ_ALL	30.30%
3	C63-CCFSOFTWARE_S	20.30%	C63-CCFSOFTWARE_S	20.40%
4	B21-SQV-CC_ALL	19.50%	E50-SQV-CC-INJ_ALL	15.00%
5	E50-SQV-CC_ALL	14.80%	B21-SQV-CC_ALL	14.10%
6	C62-CCFSOFTWARE	3.95%	C63-CCFSOFTWARE	3.91%
7	C63-CCFSOFTWARE	3.48%	C62-CCFSOFTWARE	3.52%
8	C72-CCFSOFTWARE	1.76%	C72-CCFSOFTWARE	1.43%

22.6 HUMAN RELIABILITY ANALYSIS

22.6.1 Overview

Overall, there is no major change to the Human Reliability Analysis section. The selection methodology and quantification approach of Human Reliability Analysis section were not changed. Some system modeling required new operator actions.

New Operator Actions are shown in Table 22.6-1 and Table 22.6-2.

22.6.2 Conclusion

Only minor changes were made to the Human Reliability Analysis section. No major risk index impact is expected as a result of these changes.

Basic events importance, including operator action basic events, will be shown in Section 22.7. Top ranked operator actions CDF contributions and their various risk importance measures as a result of the integrated PRA model quantification will be displayed.

Table 22.6-1

New Type C Operator Action

No	HRA Name	Description	Type	Cognitive Part	Available Time	Median Value	Manual Part	Median Value	HRA Value
1	C71-XHE-FO-SCRAM	OPERATOR FAILS TO PERFORM MANUAL SCRAM	It is judged this operator action is inversely related to existing operator action, C41-XHE-FO-EQU, OPERATOR FAILS TO ACTUATE SLCS. Operator action C41-XHE-FO-EQU has a value of 1.77E-2. It is also judged that C71-XHE-FO-SCRAM occurs earlier in the sequence than the C41 operator action, but with a higher stress level condition. As such, a 1.77E-1 screened dependency factor between the C71 and the C41 operator is assumed.						1.00E-01
2	P51-XHE-FO-0001-CD	OPERATOR FAILS TO ALIGN ONE BACKUP CMP TO	CP	Rule	60 minutes	1.00E-02	Skill	1.00E-03	1.77E-02
3	P51-XHE-P21-BU	OPERATOR ACTION TO CONNECT ALTERNATE COOLING GIVEN RCCW FAILED	CP	Rule	60 minutes	1.00E-02	Skill	1.00E-03	1.77E-02
4	P52-XHE-CC-1001-B	OPERATOR FAILS TO OPEN STANDBY TRAIN AOV 0001-B	CP	Rule	60 minutes	1.00E-02	Skill	1.00E-03	1.77E-02
5	P52-XHE-FC-BV-0007	OPERATOR FAILS TO ISOLATE MANUAL VALVE	CP	Rule	60 minutes	1.00E-02	Skill	1.00E-03	1.77E-02
6	R13-XHE-FO-ADG	OPERATOR FAILS TO ALIGN ADG BUSES TO UPS BUSES	It is judged this operator action is similar to operator action U43-XHE-FO-2ND, OPERATOR FAILS TO ALIGN FPS CROSSTIE, as such, the same probability (1.61E-02) is assumed.						1.61E-02
7	R21-XHE-FO-ADG	OPERATOR FAILS TO CONTROL LOADS ON ANCILLARY DG BUSES	It is judged this operator action is similar to operator action U43-XHE-FO-2ND, OPERATOR FAILS TO ALIGN FPS CROSSTIE, as such, the same probability (1.61E-02) is assumed.						1.61E-02
8	R21-XHE-FO-ADGCROSS	OPERATOR FAILS TO CROSS-TIE THE ANCILLARY DG BUSES	It is judged this operator action is similar to operator action U43-XHE-FO-2ND, OPERATOR FAILS TO ALIGN FPS CROSSTIE, as such, the same probability (1.61E-02) is assumed.						1.61E-02

Table 22.6-2

New Type A Operator Action

No	HRA Name	Description	Behavior Type	Detection Interval (hr)	Value	Mean Value
1	C12-BV_-RE-F018A	MISPOSITION OF VALVE F018A	Rule	≤ 2190	7.50E-03	1.21E-02
2	C12-BV_-RE-F018B	MISPOSITION OF VALVE FO18B	Rule	≤ 2190	7.50E-03	1.21E-02
3	P51-CMP-RE-0001-B	SERVICE AIR SYSTEM COMPRESSOR RESTORATION ERROR	Rule	≤ 720	5.00E-03	8.07E-03
4	P51-CMP-RE-0001-C	SERVICE AIR SYSTEM COMPRESSOR RESTORATION ERROR	Rule	≤ 720	5.00E-03	8.07E-03
5	P51-CMP-RE-0001-D	SERVICE AIR SYSTEM COMPRESSOR RESTORATION ERROR	Rule	≤ 720	5.00E-03	8.07E-03
6	R21-TRN-RE-FOADGA	FAILURE TO RESTORE FUEL OIL TRANSFER TRAIN FOR ADG-A	Rule	≤ 2190	1.50E-02	2.42E-02
7	R21-TRN-RE-FOADGB	FAILURE TO RESTORE FUEL OIL TRANSFER TRAIN FOR ADG-A	Rule	≤ 2190	1.50E-02	2.42E-02

22.7 CORE DAMAGE FREQUENCY QUANTIFICATION

This subsection documents the Revision 3 Level 1 At-Power Internal Events PRA model quantification, which incorporates all changes documented in subsections 22.2, 22.3, 22.4, 22.5, and 22.6. The quantification process described in subsection 7.3 is still applicable to the Revision 3 quantification. The purpose of this subsection is to quantify and summarize the Level 1 results with the updated PRA model and to evaluate any significant changes and their effect, if any, on the overall PRA insights and conclusions.

22.7.1 Significant Design and Modeling Changes

There have been design changes and development for DCD Revision 5 that affect the Level 1 PRA model. These changes have been explained in detail throughout the system documentation in earlier subsections of Section 22. The notable changes are summarized again in Table 22.7-1 for convenience.

Other notable model changes incorporated in the quantification process are summarized as follows:

(1) Loss of instrument air (initiating event %T-IA) will result in a loss of feedwater system. Therefore, initiating event %T-IA is modeled as one of the initiating events under the loss of feedwater transient event tree.

(2) The master mutually exclusive cutset file is updated to include new combinations. (e.g., the two ancillary diesel generators should not be taken out of service at the same time; sequence T-IORV018 cutsets should not include the operator failure to recognize the need for low pressure makeup because this sequence has a success on operator manual depressurization.)

22.7.2 Results Impact

The baseline Revision 3 Level 1 At-Power Internal Events PRA model is quantified with all accident sequence, data analysis and system model changes incorporated. The updated simplified Q-DCIS and N-DCIS system models are used for baseline model quantification, which capture the power dependencies and common cause failures of software. This approach provides a more straightforward comparison with the Revision 2 quantification results.

The total CDF for Revision 3 baseline Level 1 At-Power Internal Events PRA model is quantified to be 1.21E-8/yr with a 1E-15 truncation limit, which is slightly changed from the Revision 2 CDF of 1.22E-8/yr (i.e., a reduction of 0.8% in total CDF). This demonstrates that the ESBWR CDF value has been stabilized at the 1E-8/yr level, which is significantly below the NRC safety goal of 1E-4/yr, although the system model changes with more detailed design and PRA model enhancements may still result in some changes in PRA results.

Subsection 22.7.2.1 through 22.7.2.5 summarize the Revision 3 Level 1 quantification results and describe the notable changes. Subsection 22.7.2.6 summarizes the convergence analysis for the Revision 3 quantification.

22.7.2.1 Changes in Initiating Event Contribution

Figure 22.7-1 shows the Revision 3 CDF contribution by initiating event groups, which is similar to Figure 7.2-1. Table 22.7-2 lists all the Revision 2 and 3 CDF contributions by initiating events. It also shows the CDF contribution changes between the two revisions.

Two notable CDF changes (CDF contribution change > 1%) in Table 22.7-2 are associated with initiating events %T-IORV (inadvertent opening of relief valves) and %T-GEN (general transient). These result changes are introduced mainly by the following model changes in Revision 3:

(1) The Revision 3 master mutually exclusive cutset file adds a new mutually exclusive cutset for accident sequence T-IORV018 (described in subsection 22.7.1). This change renders more accurate quantification results in Revision 3, which reduced the CDF contribution from sequence T-IORV018 by about 5.4%. This covers almost all the reduction in CDF contribution for %T-IORV.

(2) The Revision 3 DPS system model updated the load driver modeling (described in Table 22.7-1). This change results in relatively significant CDF contribution increase (about 5.2% of total CDF) for ATWS sequence AT-T-GEN026, in which the failure of feedwater runback function directly leads to core damage. Because initiating event %T-GEN probability is much higher than other initiating events in the T-GEN and AT-T-GEN sequences, the majority of the AT-T-GEN026 CDF contribution increase is associated with %T-GEN.

Overall, the net effect of the two notable CDF changes with respect to initiating events results in negligible change in the total CDF.

22.7.2.2 Changes in Accident Class Contribution

Figure 22.7-2 shows the Revision 3 CDF contribution by accident classes, which is similar to Figure 7.2-2. Table 22.7-3 lists all the Revision 2 and 3 CDF contributions by accident classes. It also shows the CDF contribution changes between the two revisions. The Revision 2 CDF contributions by accident classes are copied from Table 7.2-2.

Three notable CDF changes (CDF contribution change > 1%) in Table 22.7-3 are associated with accident classes cdi, cdiii and cdiv. These result changes are introduced mainly by the following model changes in Revision 3:

(1) The Revision 3 event trees have re-binned some class cdiii sequences to cdi (described in Table 22.7-1). This effectively increases the cdi CDF contribution by about 24%. Other model updates, such as the DPS load driver model update, consist of the remaining increase of cdi CDF contribution.

(2) Due to the event tree re-binning, the class cdiii's contribution is reduced by about 24% as discussed above. The additional CDF reduction in class cdiii is mainly introduced by the CDF reduction in accident sequence T-IORV018 (described in subsection 22.7.2.1). Accident sequence T-IORV018 was a class cdiii sequence, which has an additional 5.4% reduction in the CDF contribution from Revision 2.

(3) The increase in the CDF contribution from accident class cdiv is mainly introduced by accident sequence AT-T-GEN026 (described in subsection 22.7.2.1), which is an ATWS sequence that belongs to accident class cdiv.

Overall, the net effect of the above notable CDF changes with respect to accident classes results in negligible change in the total CDF.

22.7.2.3 Changes in Accident Sequences

Figure 22.7-3 shows the top accident sequences with Revision 3 CDF contribution above 1%. The ranking of the top three accident sequences remain unchanged in Revision 3:

(1) Sequence T-IORV063: CDF contribution is slightly reduced with system model updates.

(2) Sequence AT-T-GEN023: CDF contribution is unchanged.

(3) Sequence T-FDW050: CDF contribution is slightly increased mainly due to the inclusion of initiating event %T-IA under the T-FDW event tree (described in subsection 22.7.1).

Notable changes in top accident sequences are described as follows:

(1) Sequence AT-T-GEN026's ranking is changed from #13 in Revision 2 to #4 in Revision 3. As described in above subsections, the updated DPS model results in an increase of 5.2% in CDF contribution for this sequence.

(2) Sequence T-IORV018's ranking dropped from #4 in Revision 2 to #13 in Revision 3. As described in above subsections, the Revision 3 master mutually exclusive cutset file update is main contributor to this change, which results in a reduction of 5.4% in CDF contribution for this sequence.

(3) Sequence T-IORV017's ranking is changed from #8 in Revision 2 to #5 in Revision 3 with an increase of 0.8% in its CDF contribution. This change is mainly introduced by the design change to use the ancillary diesel generators to power the RPV makeup pump (described in Table 22.7-1). Although the ancillary diesel generators are totally independent of all other AC power sources, they are conservatively modeled in Revision 3, which resulted in relatively higher CDF contributions from the electrical system components in sequences with fire protection system failures.

(4) Sequences AT-T-GEN021, T-IORV065 and AT-T-LOPP013 dropped the ranking by one each due to the higher ranking for sequence T-IORV017. Their Revision 3 CDF contributions are slightly reduced with updated system models.

(5) Revision 2 top sequence #15, T-GEN067, is dropped out of the top sequence list in Revision 3 (i.e., CDF contribution < 1%). This is caused by the model change to the include initiating event %T-IA under the T-FDW event tree instead of the T-GEN event tree (described in subsection 22.7.1).

(6) Sequences AT-T-IORV009 and AT-F-FDW015 increased the ranking by one due to the dropout of sequence T-GEN067. Their CDF contributions are slightly changed (±0.1%).

Other top sequences do not have changes in the ranking.

The two top sequences with notable changes in CDF contribution (CDF contribution change > 1%) are AT-T-GEN026 and T-IORV018. The net effect of the notable CDF contributions from all sequences results in negligible change in the total CDF.

22.7.2.4 Changes in Top Cutsets Contributing to CDF

Table 22.7-4 provides the top 200 cutsets contributing to CDF in Revision 3. A comparison between the Revision 3 and Revision 2 top 25 cutsets is described as follows.

(1) Globally, CCF event E50-UV_-OC-INJ_ALL in Revision 3 replaces CCF event E50-UV_-OC_ALL in Revision 2, which are the same (i.e., CCF of all E50 check valves on the injection paths). CCF event E50-SQV-CC-INJ_ALL in Revision 3 also replaces CCF event E50-SQV-CC_ALL in Revision 2, which are the same (i.e., CCF of all E50 squib valves on the injection paths).

(2) The #1 cutset in Revision 3 is the same as Revision 2.

(3) The #2 and #3 cutsets in Revision 3 are the same as #26 and #27 cutsets in Revision 2. These two cutsets' probabilities are increased in Revision 3 with the updated load driver failure probabilities in Revision 3 (described in Table 22.7-1 for DPS system).

(4) The #13 and #21 cutsets in Revision 2 is deleted in Revision 3 because the update in master mutually exclusive cutset file (described in Subsection 22.7.1).

(5) All other cutsets are the same as Revision 2.

Overall, the changes in Revision 3 top 200 cutsets are consistent with the changes described in the above subsections, which results in negligible change in the total CDF.

22.7.2.5 Changes in Accident Subclasses Based on Lower Drywell Water Level

Table 22.7-5 shows the changes in CDF contribution by accident subclasses based on the lower drywell (LDW) water level. There is almost no change in the CDF contributions for the accident subclasses with "High" and "Medium" LDW water levels.

Notable change is identified for the CDF contribution associated with the accident subclass with "Low" LDW water level. This change is mainly introduced by the switching of the following six sequences from class cdiii in Revision 2 to cdi in Revision 3:

- AT-T-FDW013
- AT-T-GEN021
- AT-T-IORV009
- AT-T-LOPP013
- T-IORV018
- T-IORV065

Among the above sequences, sequences AT-T-IORV009, T-IORV018 and T-IORV065 have already been considered as "selected cdiii" sequences to be part of the accident sequence with "Low" LDW water level in Revision 2. The other three cdiii sequences in Revision 2 were not counted toward any accident subclass. In Revision 3, these three sequences (AT-T-FDW013, AT-T-GEN021 and AT-T-LOPP013) are also classified as part of the accident subclass with

"Low" LDW water level. The CDF contributions from these three sequences account for the CDF contribution change for the accident subclass with "Low" LDW water level.

Because the sequences with "Low" LDW water level have negligible impact on the Level 2 results, the changes in the accident subclasses between Revision 2 and Revision 3 have negligible impact on the PRA results.

22.7.2.6 Revision 3 Convergence Analysis

The Revision 3 Level 1 At-Power Internal Events PRA model has been quantified at different truncations to evaluate convergence. The results indicate that the model trends towards convergence at a truncation limit between 1E-14 and 1E-15. Therefore, the baseline case with a truncation limit of 1E-15 is appropriate.

Truncation	CDF	%Change
1.00E-10	3.627E-09	N/A
1.00E-11	6.324E-09	74.4%
1.00E-12	8.797E-09	39.1%
1.00E-13	1.054E-08	19.8%
1.00E-14	1.161E-08	10.2%
1.00E-15	1.208E-08	4.0%

22.7.3 Conclusion

The Revision 3 Level 1 At-Power Internal Events PRA model has been updated to reflect design changes and incorporate modeling changes to support DCD Revision 5. The Revision 3 baseline Level 1 PRA results have not changed significantly from the previous revision. The notable changes in CDF contributions with respect to initiating events, accident sequences, and top cutsets reflect both DCD Revision 5 system design changes and the PRA model changes. The notable changes in CDF contributions with respect to accident classes and subclasses with respect to lower drywell (LDW) water level are relatively more important, which are introduced by the PRA model enhancement in the Revision 3 event tree development and have no impact on the total CDF. Overall, the net effect of these notable changes results in negligible change in the total CDF.

The PRA insights and conclusions documented in DCD Chapter 19, Revision 5, have not been affected by the Revision 3 design and modeling changes and thus remain valid. No additional PRA insights or assumptions have been identified.

Table 22.7-1
Notable Changes for Level 1 PRA Model

System	Further Documentation	Summary of Changes
Accident Sequence Analysis	22.3	A number of Level 1 accident sequences were re-binned based on more detailed consideration of RPV pressure at the time of vessel failure. In addition, some Class II-a sequences that featured failure of steam suppression were re-binned as Class V.
ICS	22.4.2	The ICS/PCCS cross-connect valves, which provide make-up to the inner expansion pools, have been specifically designed. PRA change involves different failure rates because some valve operators have changed.
DPS	22.4.5	1) Automatic reactor scram and automatic MSIV isolation is credited in Revision 3. 2) Load driver modeling is updated in Revision 3 to reflect the design changes and their failure probabilities are updated with a 1-month test interval to bound potential surveillance test frequencies.
AC Power System	22.4.14	1) Incorporate two ancillary diesel generators for post 72 hrs power for PCCS vent fans (not modeled) and other selected loads. 2) Provides permanently installed capability to operate long-term active equipment. Eliminates need for several portable electric generators.
UPS	22.4.15	Revision 2 assumed that the nonsafety-related UPS would supply power after two hours during a station blackout (SBO) scenario. Revision 3 explicitly models the new ancillary diesel generators as the SBO power sources for the nonsafety-related UPS.
Fire Protection System	22.4.16	Reconfigured existing diesel-driven RPV makeup pump to a motor driven pump that can be powered by the ancillary diesel generators.

Table 22.7-1
Notable Changes for Level 1 PRA Model

System	Further Documentation	Summary of Changes
Containment	22.4.18	1) Containment venting no longer depends on Q-DCIS and IAS. 2) Isolation of MSIVs by DPS is now modeled. 3) The nonsafety-related valves credited for RWCU/SDC BOC isolation now receive N-DCIS signal. 4) The vacuum breaker isolation valve design has been specified and increases reliability of the steam suppression function of containment.

Table 22.7-2
CDF Contribution by Initiating Events

Initiating Event	Revision 2 Results		Revision 3 Results		CDF Contribution Change
	CDF	% CDF	CDF	% CDF	
%T-IORV	4.45E-09	36.50%	3.73E-09	30.90%	**-5.60%**
%T-GEN	2.24E-09	18.40%	2.75E-09	22.80%	**4.40%**
%T-FDW	2.04E-09	16.70%	2.04E-09	16.90%	0.20%
%T-LOPP-GR	7.36E-10	6.03%	7.71E-10	6.38%	0.35%
%LL-S-FDWB	5.31E-10	4.35%	5.38E-10	4.45%	0.10%
%T-PCS	3.70E-10	3.03%	4.55E-10	3.77%	0.74%
%T-LOPP-SC	4.07E-10	3.34%	4.23E-10	3.50%	0.16%
%T-IA	2.43E-10	1.99%	1.98E-10	1.64%	-0.35%
%T-LOPP-WR	1.87E-10	1.53%	1.91E-10	1.58%	0.05%
%BOC-FDWB	1.09E-10	0.90%	1.70E-10	1.41%	0.51%
%SL-S	1.46E-10	1.20%	1.53E-10	1.27%	0.07%
%BOC-FDWA	1.12E-10	0.92%	1.15E-10	0.95%	0.03%
%LL-S	1.18E-10	0.97%	1.15E-10	0.95%	-0.02%
%T-SW	8.83E-11	0.72%	9.98E-11	0.83%	0.10%
%ML-L	1.67E-10	1.37%	8.96E-11	0.74%	-0.63%
%T-LOPP-PC	7.80E-11	0.64%	7.89E-11	0.65%	0.01%
%SL-L	2.98E-11	0.24%	7.07E-11	0.59%	0.34%
%LL-S-FDWA	4.82E-11	0.40%	4.43E-11	0.37%	-0.03%
%BOC-RWCU	6.54E-11	0.54%	1.70E-11	0.14%	-0.40%
%RVR	1.65E-11	0.14%	1.65E-11	0.14%	0.00%
%BOC-MS	1.82E-11	0.15%	1.38E-11	0.11%	-0.04%
%ISLOCA	0.00E+00	0.00%	1.72E-12	0.01%	0.01%
%BOC-IC	1.24E-14	0.00%	0.00E+00	0.00%	0.00%

Table 22.7-3

CDF Contribution by Accident Classes

Accident Classes		Revision 2 Results		Revision 3 Results		CDF Contribution Change
		CDF	% CDF	CDF	% CDF	
cdi	CD at low RPV pressure and containment intact	5.63E-09	46.16%	8.68E-09	71.86%	**25.70%**
cdii-a	Loss of all DHR	4.23E-11	0.35%	2.41E-11	0.20%	-0.15%
cdii-b	Loss of DHR-Vented	ε	ε	1.51E-11	0.13%	0.13%
cdiii	CD at high RPV pressure with containment intact	4.52E-09	37.02%	7.96E-10	6.59%	**-30.43%**
cdiv	CD resulting from failure to insert negative reactivity in ATWS conditions	1.87E-09	15.36%	2.53E-09	20.92%	**5.56%**
cdv	Containment bypassed at the beginning of the accident	1.47E-10	1.20%	4.97E-11	0.41%	-0.79%

Table 22.7-4
Top 200 Cutsets Contributing to Revision 3 CDF

#	Cutset Prob	Event	Event Prob	Description
1	5.66E-10	%T-FDW	1.17E-01	LOSS OF FEEDWATER
		C63-CCFSOFTWARE_S	1.00E-04	Common Cause failure of Q-DCIS Software for Spurious
		E50-UV_-OC-INJ_ALL	3.01E-04	CCF of all components in group 'E50-UV_-OC-INJ'
		XXX-XHE-FO-LPMAKEUP	1.61E-01	OP. FAILS TO RECOG. NEED FOR LOW PRESS. MAKEUP AFTER DEPRESSURIZATION
2	3.22E-10	%T-GEN	1.18E+00	GENERAL TRANSIENT
		C12-ROD-CF-SCRAM	2.50E-07	CCF OF CONTROL RODS TO INSERT
		C72-LDD-FC-FWRB1	1.09E-03	LOAD DRIVER FAILS TO ENERGIZE FWRB CIRCUIT
3	3.22E-10	%T-GEN	1.18E+00	GENERAL TRANSIENT
		C12-ROD-CF-SCRAM	2.50E-07	CCF OF CONTROL RODS TO INSERT
		C72-LDD-FC-FWRB2	1.09E-03	LOAD DRIVER FAILS TO ENERGIZE FWRB CIRCUIT
4	2.83E-10	%T-FDW	1.17E-01	LOSS OF FEEDWATER
		B21-SQV-CC_ALL	1.50E-04	CCF of all components in group 'B21-SQV-CC'
		C63-CCFSOFTWARE_S	1.00E-04	Common Cause failure of Q-DCIS Software for Spurious
		XXX-XHE-FO-DEPRESS	1.61E-01	OPERATOR FAILS TO RECOGNIZE NEED OF DEPRESSURIZATION
5	2.83E-10	%T-FDW	1.17E-01	LOSS OF FEEDWATER

Table 22.7-4
Top 200 Cutsets Contributing to Revision 3 CDF

#	Cutset Prob	Event	Event Prob	Description
		C63-CCFSOFTWARE_S	1.00E-04	Common Cause failure of Q-DCIS Software for Spurious
		E50-SQV-CC-INJ_ALL	1.50E-04	CCF of all components in group 'E50-SQV-CC-INJ'
		XXX-XHE-FO-LPMAKEUP	1.61E-01	OP. FAILS TO RECOG. NEED FOR LOW PRESS. MAKEUP AFTER DEPRESSURIZATION
6	2.69E-10	%LL-S-FDWB	5.55E-06	LARGE STEAM LOCA IN FW LINE B
		E50-UV_-OC-INJ_ALL	3.01E-04	CCF of all components in group 'E50-UV_-OC-INJ'
		XXX-XHE-FO-LPMAKEUP	1.61E-01	OP. FAILS TO RECOG. NEED FOR LOW PRESS. MAKEUP AFTER DEPRESSURIZATION
7	2.36E-10	%T-GEN	1.18E+00	GENERAL TRANSIENT
		C12-ROD-CF-SCRAM	2.50E-07	CCF OF CONTROL RODS TO INSERT
		C41-UV_-CC-F004A	7.99E-04	CHECK VALVE F004A FAILS TO OPEN
8	2.36E-10	%T-GEN	1.18E+00	GENERAL TRANSIENT
		C12-ROD-CF-SCRAM	2.50E-07	CCF OF CONTROL RODS TO INSERT
		C41-UV_-CC-F004B	7.99E-04	CHECK VALVE F004B FAILS TO OPEN
9	2.36E-10	%T-GEN	1.18E+00	GENERAL TRANSIENT
		C12-ROD-CF-SCRAM	2.50E-07	CCF OF CONTROL RODS TO INSERT
		C41-UV_-CC-F005A	7.99E-04	CHECK VALVE F005A FAILS TO OPEN
10	2.36E-10	%T-GEN	1.18E+00	GENERAL TRANSIENT

Table 22.7-4
Top 200 Cutsets Contributing to Revision 3 CDF

#	Cutset Prob	Event	Event Prob	Description
		C12-ROD-CF-SCRAM	2.50E-07	CCF OF CONTROL RODS TO INSERT
		C41-UV_-CC-F005B	7.99E-04	CHECK VALVE F005B FAILS TO OPEN
11	1.99E-10	%T-IORV	2.83E-02	IORV
		C12-BV_-RE-F065	4.84E-02	MISPOSITION OF LOCKED OPEN VALVE F065
		E50-UV_-OC-INJ_ALL	3.01E-04	CCF of all components in group 'E50-UV_-OC-INJ'
		R10-LOSP-EPRI	3.00E-03	CONSEQUENTIAL LOSS OF PREFERRED OFFSITE POWER DUE TO A TRANSIENT
		XXX-XHE-FO-DEPRESS	1.61E-01	OPERATOR FAILS TO RECOGNIZE NEED OF DEPRESSURIZATION
12	1.70E-10	%T-FDW	1.17E-01	LOSS OF FEEDWATER
		C63-CCFSOFTWARE_S	1.00E-04	Common Cause failure of Q-DCIS Software for Spurious
		E50-UV_-OC-INJ_ALL	3.01E-04	CCF of all components in group 'E50-UV_-OC-INJ'
		G21-BV_-RE-F334	4.84E-02	MISPOSITION OF VALVE F334
13	1.37E-10	%T-IORV	2.83E-02	IORV
		C62-CCFSOFTWARE	1.00E-04	Common cause failure of software
		E50-UV_-OC-INJ_ALL	3.01E-04	CCF of all components in group 'E50-UV_-OC-INJ'
		XXX-XHE-FO-DEPRESS	1.61E-01	OPERATOR FAILS TO RECOGNIZE NEED OF DEPRESSURIZATION
14	1.34E-10	%LL-S-FDWB	5.55E-06	LARGE STEAM LOCA IN FW LINE B

Table 22.7-4
Top 200 Cutsets Contributing to Revision 3 CDF

#	Cutset Prob	Event	Event Prob	Description
		E50-SQV-CC-INJ_ALL	1.50E-04	CCF of all components in group 'E50-SQV-CC-INJ'
		XXX-XHE-FO-LPMAKEUP	1.61E-01	OP. FAILS TO RECOG. NEED FOR LOW PRESS. MAKEUP AFTER DEPRESSURIZATION
15	9.92E-11	%T-IORV	2.83E-02	IORV
		B21-SQV-CC_ALL	1.50E-04	CCF of all components in group 'B21-SQV-CC'
		C12-BV_-RE-F065	4.84E-02	MISPOSITION OF LOCKED OPEN VALVE F065
		R10-LOSP-EPRI	3.00E-03	CONSEQUENTIAL LOSS OF PREFERRED OFFSITE POWER DUE TO A TRANSIENT
		XXX-XHE-FO-DEPRESS	1.61E-01	OPERATOR FAILS TO RECOGNIZE NEED OF DEPRESSURIZATION
16	9.92E-11	%T-IORV	2.83E-02	IORV
		C12-BV_-RE-F065	4.84E-02	MISPOSITION OF LOCKED OPEN VALVE F065
		E50-SQV-CC-INJ_ALL	1.50E-04	CCF of all components in group 'E50-SQV-CC-INJ'
		R10-LOSP-EPRI	3.00E-03	CONSEQUENTIAL LOSS OF PREFERRED OFFSITE POWER DUE TO A TRANSIENT
		XXX-XHE-FO-DEPRESS	1.61E-01	OPERATOR FAILS TO RECOGNIZE NEED OF DEPRESSURIZATION
17	9.00E-11	%T-LOPP-GR	1.86E-02	GRID RELATED LOSS OF PREFERRED POWER
		C63-CCFSOFTWARE_S	1.00E-04	Common Cause failure of Q-DCIS Software for Spurious
		E50-UV_-OC-INJ_ALL	3.01E-04	CCF of all components in group 'E50-UV_-OC-INJ'
		XXX-XHE-FO-LPMAKEUP	1.61E-01	OP. FAILS TO RECOG. NEED FOR LOW PRESS. MAKEUP AFTER DEPRESSURIZATION

Table 22.7-4
Top 200 Cutsets Contributing to Revision 3 CDF

#	Cutset Prob	Event	Event Prob	Description
18	8.49E-11	%T-FDW	1.17E-01	LOSS OF FEEDWATER
		B21-SQV-CC_ALL	1.50E-04	CCF of all components in group 'B21-SQV-CC'
		C63-CCFSOFTWARE_S	1.00E-04	Common Cause failure of Q-DCIS Software for Spurious
		G21-BV_-RE-F334	4.84E-02	MISPOSITION OF VALVE F334
19	8.49E-11	%T-FDW	1.17E-01	LOSS OF FEEDWATER
		C63-CCFSOFTWARE_S	1.00E-04	Common Cause failure of Q-DCIS Software for Spurious
		E50-SQV-CC-INJ_ALL	1.50E-04	CCF of all components in group 'E50-SQV-CC-INJ'
		G21-BV_-RE-F334	4.84E-02	MISPOSITION OF VALVE F334
20	8.47E-11	%LL-S	3.39E-04	LARGE STEAM LOCA (NO FW LINE BREAK)
		C12-ROD-CF-SCRAM	2.50E-07	CCF OF CONTROL RODS TO INSERT
21	8.07E-11	%LL-S-FDWB	5.55E-06	LARGE STEAM LOCA IN FW LINE B
		E50-UV_-OC-INJ_ALL	3.01E-04	CCF of all components in group 'E50-UV_-OC-INJ'
		G21-BV_-RE-F334	4.84E-02	MISPOSITION OF VALVE F334
22	6.83E-11	%T-IORV	2.83E-02	IORV
		B21-SQV-CC_ALL	1.50E-04	CCF of all components in group 'B21-SQV-CC'
		C62-CCFSOFTWARE	1.00E-04	Common cause failure of software

Table 22.7-4
Top 200 Cutsets Contributing to Revision 3 CDF

#	Cutset Prob	Event	Event Prob	Description
		XXX-XHE-FO-DEPRESS	1.61E-01	OPERATOR FAILS TO RECOGNIZE NEED OF DEPRESSURIZATION
23	6.83E-11	%T-IORV	2.83E-02	IORV
		C62-CCFSOFTWARE	1.00E-04	Common cause failure of software
		E50-SQV-CC-INJ_ALL	1.50E-04	CCF of all components in group 'E50-SQV-CC-INJ'
		XXX-XHE-FO-DEPRESS	1.61E-01	OPERATOR FAILS TO RECOGNIZE NEED OF DEPRESSURIZATION
24	6.63E-11	%T-IORV	2.83E-02	IORV
		BOPCWS-SYS-FAILS	1.00E-03	BALANCE OF PLANT CHILLED WATER SYSTEM FAILS
		C12-BV_-RE-F065	4.84E-02	MISPOSITION OF LOCKED OPEN VALVE F065
		E50-UV_-OC-INJ_ALL	3.01E-04	CCF of all components in group 'E50-UV_-OC-INJ'
		XXX-XHE-FO-DEPRESS	1.61E-01	OPERATOR FAILS TO RECOGNIZE NEED OF DEPRESSURIZATION
25	5.98E-11	%T-IORV	2.83E-02	IORV
		C12-BV_-RE-F065	4.84E-02	MISPOSITION OF LOCKED OPEN VALVE F065
		E50-UV_-OC-INJ_ALL	3.01E-04	CCF of all components in group 'E50-UV_-OC-INJ'
		G21-BV_-RE-F334	4.84E-02	MISPOSITION OF VALVE F334
		R10-LOSP-EPRI	3.00E-03	CONSEQUENTIAL LOSS OF PREFERRED OFFSITE POWER DUE TO A TRANSIENT
26	5.38E-11	%T-PCS	1.97E-01	TRANSIENT WITH PCS UNAVAILABLE

Table 22.7-4
Top 200 Cutsets Contributing to Revision 3 CDF

#	Cutset Prob	Event	Event Prob	Description
		C12-ROD-CF-SCRAM	2.50E-07	CCF OF CONTROL RODS TO INSERT
		C72-LDD-FC-FWRB1	1.09E-03	LOAD DRIVER FAILS TO ENERGIZE FWRB CIRCUIT
27	5.38E-11	%T-PCS	1.97E-01	TRANSIENT WITH PCS UNAVAILABLE
		C12-ROD-CF-SCRAM	2.50E-07	CCF OF CONTROL RODS TO INSERT
		C72-LDD-FC-FWRB2	1.09E-03	LOAD DRIVER FAILS TO ENERGIZE FWRB CIRCUIT
28	5.37E-11	%T-GEN	1.18E+00	GENERAL TRANSIENT
		C63-CCFSOFTWARE	1.00E-04	Common cause failure of software
		R13-XFL-LP-CCFNSR2_ALL	4.55E-07	CCF of all components in group 'R13-XFL-LP-CCFNSR2'
29	5.11E-11	%BOC-FDWA	1.70E-03	FEEDWATER LINE A BREAK OUTSIDE CONTAINMENT
		C63-CCFSOFTWARE_S	1.00E-04	Common Cause failure of Q-DCIS Software for Spurious
		E50-UV_-OC-INJ_ALL	3.01E-04	CCF of all components in group 'E50-UV_-OC-INJ'
30	5.03E-11	%T-LOPP-SC	1.04E-02	SWITCHYARD CENTERED LOSS OF PREFERRED POWER
		C63-CCFSOFTWARE_S	1.00E-04	Common Cause failure of Q-DCIS Software for Spurious
		E50-UV_-OC-INJ_ALL	3.01E-04	CCF of all components in group 'E50-UV_-OC-INJ'
		XXX-XHE-FO-LPMAKEUP	1.61E-01	OP. FAILS TO RECOG. NEED FOR LOW PRESS. MAKEUP AFTER DEPRESSURIZATION
31	4.94E-11	%T-IA	1.02E-02	COMPLETE LOSS OF AIR SYSTEMS

Table 22.7-4
Top 200 Cutsets Contributing to Revision 3 CDF

#	Cutset Prob	Event	Event Prob	Description
		C63-CCFSOFTWARE_S	1.00E-04	Common Cause failure of Q-DCIS Software for Spurious
		E50-UV_-OC-INJ_ALL	3.01E-04	CCF of all components in group 'E50-UV_-OC-INJ'
		XXX-XHE-FO-LPMAKEUP	1.61E-01	OP. FAILS TO RECOG. NEED FOR LOW PRESS. MAKEUP AFTER DEPRESSURIZATION
32	4.49E-11	%T-LOPP-GR	1.86E-02	GRID RELATED LOSS OF PREFERRED POWER
		B21-SQV-CC_ALL	1.50E-04	CCF of all components in group 'B21-SQV-CC'
		C63-CCFSOFTWARE_S	1.00E-04	Common Cause failure of Q-DCIS Software for Spurious
		XXX-XHE-FO-DEPRESS	1.61E-01	OPERATOR FAILS TO RECOGNIZE NEED OF DEPRESSURIZATION
33	4.49E-11	%T-LOPP-GR	1.86E-02	GRID RELATED LOSS OF PREFERRED POWER
		C63-CCFSOFTWARE_S	1.00E-04	Common Cause failure of Q-DCIS Software for Spurious
		E50-SQV-CC-INJ_ALL	1.50E-04	CCF of all components in group 'E50-SQV-CC-INJ'
		XXX-XHE-FO-LPMAKEUP	1.61E-01	OP. FAILS TO RECOG. NEED FOR LOW PRESS. MAKEUP AFTER DEPRESSURIZATION
34	4.42E-11	%T-GEN	1.18E+00	GENERAL TRANSIENT
		C12-ROD-CF-SCRAM	2.50E-07	CCF OF CONTROL RODS TO INSERT
		C41-SQV-CC_ALL	1.50E-04	CCF of all components in group 'C41-SQV-CC'
35	4.12E-11	%T-IORV	2.83E-02	IORV
		C62-CCFSOFTWARE	1.00E-04	Common cause failure of software

Table 22.7-4
Top 200 Cutsets Contributing to Revision 3 CDF

#	Cutset Prob	Event	Event Prob	Description
		E50-UV_-OC-INJ_ALL	3.01E-04	CCF of all components in group 'E50-UV_-OC-INJ'
		G21-BV_-RE-F334	4.84E-02	MISPOSITION OF VALVE F334
36	4.03E-11	%LL-S-FDWB	5.55E-06	LARGE STEAM LOCA IN FW LINE B
		E50-SQV-CC-INJ_ALL	1.50E-04	CCF of all components in group 'E50-SQV-CC-INJ'
		G21-BV_-RE-F334	4.84E-02	MISPOSITION OF VALVE F334
37	3.94E-11	%T-PCS	1.97E-01	TRANSIENT WITH PCS UNAVAILABLE
		C12-ROD-CF-SCRAM	2.50E-07	CCF OF CONTROL RODS TO INSERT
		C41-UV_-CC-F004A	7.99E-04	CHECK VALVE F004A FAILS TO OPEN
38	3.94E-11	%T-PCS	1.97E-01	TRANSIENT WITH PCS UNAVAILABLE
		C12-ROD-CF-SCRAM	2.50E-07	CCF OF CONTROL RODS TO INSERT
		C41-UV_-CC-F004B	7.99E-04	CHECK VALVE F004B FAILS TO OPEN
39	3.94E-11	%T-PCS	1.97E-01	TRANSIENT WITH PCS UNAVAILABLE
		C12-ROD-CF-SCRAM	2.50E-07	CCF OF CONTROL RODS TO INSERT
		C41-UV_-CC-F005A	7.99E-04	CHECK VALVE F005A FAILS TO OPEN
40	3.94E-11	%T-PCS	1.97E-01	TRANSIENT WITH PCS UNAVAILABLE
		C12-ROD-CF-SCRAM	2.50E-07	CCF OF CONTROL RODS TO INSERT

Table 22.7-4
Top 200 Cutsets Contributing to Revision 3 CDF

#	Cutset Prob	Event	Event Prob	Description
		C41-UV_-CC-F005B	7.99E-04	CHECK VALVE F005B FAILS TO OPEN
41	3.31E-11	%T-IORV	2.83E-02	IORV
		C12-BV_-RE-F065	4.84E-02	MISPOSITION OF LOCKED OPEN VALVE F065
		E50-UV_-OC-INJ_ALL	3.01E-04	CCF of all components in group 'E50-UV_-OC-INJ'
		R16-BDC-TM-R16A3	5.00E-04	DC BUS R16-A3 IN MAINTENANCE
		XXX-XHE-FO-DEPRESS	1.61E-01	OPERATOR FAILS TO RECOGNIZE NEED OF DEPRESSURIZATION
42	3.31E-11	%T-IORV	2.83E-02	IORV
		C12-BV_-RE-F065	4.84E-02	MISPOSITION OF LOCKED OPEN VALVE F065
		E50-UV_-OC-INJ_ALL	3.01E-04	CCF of all components in group 'E50-UV_-OC-INJ'
		R16-BT_-TM-R16BTA3	5.00E-04	BATTERY R16-BTA3 IN TEST AND MAINTENANCE
		XXX-XHE-FO-DEPRESS	1.61E-01	OPERATOR FAILS TO RECOGNIZE NEED OF DEPRESSURIZATION
43	3.31E-11	%T-IORV	2.83E-02	IORV
		B21-SQV-CC_ALL	1.50E-04	CCF of all components in group 'B21-SQV-CC'
		BOPCWS-SYS-FAILS	1.00E-03	BALANCE OF PLANT CHILLED WATER SYSTEM FAILS
		C12-BV_-RE-F065	4.84E-02	MISPOSITION OF LOCKED OPEN VALVE F065
		XXX-XHE-FO-DEPRESS	1.61E-01	OPERATOR FAILS TO RECOGNIZE NEED OF DEPRESSURIZATION

Table 22.7-4
Top 200 Cutsets Contributing to Revision 3 CDF

#	Cutset Prob	Event	Event Prob	Description
44	3.31E-11	%T-IORV	2.83E-02	IORV
		BOPCWS-SYS-FAILS	1.00E-03	BALANCE OF PLANT CHILLED WATER SYSTEM FAILS
		C12-BV_-RE-F065	4.84E-02	MISPOSITION OF LOCKED OPEN VALVE F065
		E50-SQV-CC-INJ_ALL	1.50E-04	CCF of all components in group 'E50-SQV-CC-INJ'
		XXX-XHE-FO-DEPRESS	1.61E-01	OPERATOR FAILS TO RECOGNIZE NEED OF DEPRESSURIZATION
45	2.98E-11	%T-IORV	2.83E-02	IORV
		B21-SQV-CC_ALL	1.50E-04	CCF of all components in group 'B21-SQV-CC'
		C12-BV_-RE-F065	4.84E-02	MISPOSITION OF LOCKED OPEN VALVE F065
		G21-BV_-RE-F334	4.84E-02	MISPOSITION OF VALVE F334
		R10-LOSP-EPRI	3.00E-03	CONSEQUENTIAL LOSS OF PREFERRED OFFSITE POWER DUE TO A TRANSIENT
46	2.98E-11	%T-IORV	2.83E-02	IORV
		C12-BV_-RE-F065	4.84E-02	MISPOSITION OF LOCKED OPEN VALVE F065
		E50-SQV-CC-INJ_ALL	1.50E-04	CCF of all components in group 'E50-SQV-CC-INJ'
		G21-BV_-RE-F334	4.84E-02	MISPOSITION OF VALVE F334
		R10-LOSP-EPRI	3.00E-03	CONSEQUENTIAL LOSS OF PREFERRED OFFSITE POWER DUE TO A TRANSIENT
47	2.95E-11	%T-GEN	1.18E+00	GENERAL TRANSIENT

Table 22.7-4
Top 200 Cutsets Contributing to Revision 3 CDF

#	Cutset Prob	Event	Event Prob	Description
		C12-ROD-CF-SCRAM	2.50E-07	CCF OF CONTROL RODS TO INSERT
		C51-CCFSOFTWARE	1.00E-04	NMS COMMON CAUSE SOFTWARE FAILURE
48	2.95E-11	%T-GEN	1.18E+00	GENERAL TRANSIENT
		C12-ROD-CF-SCRAM	2.50E-07	CCF OF CONTROL RODS TO INSERT
		C63-CCFSOFTWARE	1.00E-04	Common cause failure of software
49	2.95E-11	%T-GEN	1.18E+00	GENERAL TRANSIENT
		C12-ROD-CF-SCRAM	2.50E-07	CCF OF CONTROL RODS TO INSERT
		C72-CCFSOFTWARE	1.00E-04	COMMON CAUSE FAILURE OF DPS PROCESSORS
50	2.71E-11	%T-LOPP-GR	1.86E-02	GRID RELATED LOSS OF PREFERRED POWER
		C63-CCFSOFTWARE_S	1.00E-04	Common Cause failure of Q-DCIS Software for Spurious
		E50-UV_-OC-INJ_ALL	3.01E-04	CCF of all components in group 'E50-UV_-OC-INJ'
		G21-BV_-RE-F334	4.84E-02	MISPOSITION OF VALVE F334
51	2.55E-11	%BOC-FDWA	1.70E-03	FEEDWATER LINE A BREAK OUTSIDE CONTAINMENT
		B21-SQV-CC_ALL	1.50E-04	CCF of all components in group 'B21-SQV-CC'
		C63-CCFSOFTWARE_S	1.00E-04	Common Cause failure of Q-DCIS Software for Spurious
52	2.55E-11	%BOC-FDWA	1.70E-03	FEEDWATER LINE A BREAK OUTSIDE CONTAINMENT

Table 22.7-4
Top 200 Cutsets Contributing to Revision 3 CDF

#	Cutset Prob	Event	Event Prob	Description
		C63-CCFSOFTWARE_S	1.00E-04	Common Cause failure of Q-DCIS Software for Spurious
		E50-SQV-CC-INJ_ALL	1.50E-04	CCF of all components in group 'E50-SQV-CC-INJ'
53	2.51E-11	%T-LOPP-SC	1.04E-02	SWITCHYARD CENTERED LOSS OF PREFERRED POWER
		B21-SQV-CC_ALL	1.50E-04	CCF of all components in group 'B21-SQV-CC'
		C63-CCFSOFTWARE_S	1.00E-04	Common Cause failure of Q-DCIS Software for Spurious
		XXX-XHE-FO-DEPRESS	1.61E-01	OPERATOR FAILS TO RECOGNIZE NEED OF DEPRESSURIZATION
54	2.51E-11	%T-LOPP-SC	1.04E-02	SWITCHYARD CENTERED LOSS OF PREFERRED POWER
		C63-CCFSOFTWARE_S	1.00E-04	Common Cause failure of Q-DCIS Software for Spurious
		E50-SQV-CC-INJ_ALL	1.50E-04	CCF of all components in group 'E50-SQV-CC-INJ'
		XXX-XHE-FO-LPMAKEUP	1.61E-01	OP. FAILS TO RECOG. NEED FOR LOW PRESS. MAKEUP AFTER DEPRESSURIZATION
55	2.46E-11	%T-IA	1.02E-02	COMPLETE LOSS OF AIR SYSTEMS
		B21-SQV-CC_ALL	1.50E-04	CCF of all components in group 'B21-SQV-CC'
		C63-CCFSOFTWARE_S	1.00E-04	Common Cause failure of Q-DCIS Software for Spurious
		XXX-XHE-FO-DEPRESS	1.61E-01	OPERATOR FAILS TO RECOGNIZE NEED OF DEPRESSURIZATION
56	2.46E-11	%T-IA	1.02E-02	COMPLETE LOSS OF AIR SYSTEMS
		C63-CCFSOFTWARE_S	1.00E-04	Common Cause failure of Q-DCIS Software for Spurious

Table 22.7-4
Top 200 Cutsets Contributing to Revision 3 CDF

#	Cutset Prob	Event	Event Prob	Description
		E50-SQV-CC-INJ_ALL	1.50E-04	CCF of all components in group 'E50-SQV-CC-INJ'
		XXX-XHE-FO-LPMAKEUP	1.61E-01	OP. FAILS TO RECOG. NEED FOR LOW PRESS. MAKEUP AFTER DEPRESSURIZATION
57	2.34E-11	%T-LOPP-WR	4.83E-03	WEATHER RELATED LOSS OF PREFERRED POWER
		C63-CCFSOFTWARE_S	1.00E-04	Common Cause failure of Q-DCIS Software for Spurious
		E50-UV_-OC-INJ_ALL	3.01E-04	CCF of all components in group 'E50-UV_-OC-INJ'
		XXX-XHE-FO-LPMAKEUP	1.61E-01	OP. FAILS TO RECOG. NEED FOR LOW PRESS. MAKEUP AFTER DEPRESSURIZATION
58	2.34E-11	%T-FDW	1.17E-01	LOSS OF FEEDWATER
		C12-ROD-CF-SCRAM	2.50E-07	CCF OF CONTROL RODS TO INSERT
		C41-UV_-CC-F004A	7.99E-04	CHECK VALVE F004A FAILS TO OPEN
59	2.34E-11	%T-FDW	1.17E-01	LOSS OF FEEDWATER
		C12-ROD-CF-SCRAM	2.50E-07	CCF OF CONTROL RODS TO INSERT
		C41-UV_-CC-F004B	7.99E-04	CHECK VALVE F004B FAILS TO OPEN
60	2.34E-11	%T-FDW	1.17E-01	LOSS OF FEEDWATER
		C12-ROD-CF-SCRAM	2.50E-07	CCF OF CONTROL RODS TO INSERT
		C41-UV_-CC-F005A	7.99E-04	CHECK VALVE F005A FAILS TO OPEN
61	2.34E-11	%T-FDW	1.17E-01	LOSS OF FEEDWATER

Table 22.7-4
Top 200 Cutsets Contributing to Revision 3 CDF

#	Cutset Prob	Event	Event Prob	Description
		C12-ROD-CF-SCRAM	2.50E-07	CCF OF CONTROL RODS TO INSERT
		C41-UV_-CC-F005B	7.99E-04	CHECK VALVE F005B FAILS TO OPEN
62	2.05E-11	%T-IORV	2.83E-02	IORV
		B21-SQV-CC_ALL	1.50E-04	CCF of all components in group 'B21-SQV-CC'
		C62-CCFSOFTWARE	1.00E-04	Common cause failure of software
		G21-BV_-RE-F334	4.84E-02	MISPOSITION OF VALVE F334
63	2.05E-11	%T-IORV	2.83E-02	IORV
		C62-CCFSOFTWARE	1.00E-04	Common cause failure of software
		E50-SQV-CC-INJ_ALL	1.50E-04	CCF of all components in group 'E50-SQV-CC-INJ'
		G21-BV_-RE-F334	4.84E-02	MISPOSITION OF VALVE F334
64	1.99E-11	%T-IORV	2.83E-02	IORV
		BOPCWS-SYS-FAILS	1.00E-03	BALANCE OF PLANT CHILLED WATER SYSTEM FAILS
		C12-BV_-RE-F065	4.84E-02	MISPOSITION OF LOCKED OPEN VALVE F065
		E50-UV_-OC-INJ_ALL	3.01E-04	CCF of all components in group 'E50-UV_-OC-INJ'
		G21-BV_-RE-F334	4.84E-02	MISPOSITION OF VALVE F334
65	1.86E-11	%T-IORV	2.83E-02	IORV

Table 22.7-4
Top 200 Cutsets Contributing to Revision 3 CDF

#	Cutset Prob	Event	Event Prob	Description
		E50-UV_-OC-INJ_ALL	3.01E-04	CCF of all components in group 'E50-UV_-OC-INJ'
		R10-LOSP-EPRI	3.00E-03	CONSEQUENTIAL LOSS OF PREFERRED OFFSITE POWER DUE TO A TRANSIENT
		R21-DG_-FR-CCF_1_2	4.54E-03	CCF of two components: R21-DG_-FR-DGA & R21-DG_-FR-DGB
		XXX-XHE-FO-DEPRESS	1.61E-01	OPERATOR FAILS TO RECOGNIZE NEED OF DEPRESSURIZATION
66	1.79E-11	%ML-L	3.22E-05	MEDIUM LIQUID LOCA (NO RWCU BREAK)
		T10-VB_-CC_1_2_3	5.56E-07	CCF of three components: T10-VB_-CC-VB1 & T10-VB_-CC-VB2 & T10-VB_-CC-VB3
67	1.71E-11	%T-GEN	1.18E+00	GENERAL TRANSIENT
		C63-CCFSOFTWARE_S	1.00E-04	Common Cause failure of Q-DCIS Software for Spurious
		E50-UV_-OC-INJ_ALL	3.01E-04	CCF of all components in group 'E50-UV_-OC-INJ'
		R10-LOSP-EPRI	3.00E-03	CONSEQUENTIAL LOSS OF PREFERRED OFFSITE POWER DUE TO A TRANSIENT
		XXX-XHE-FO-DEPRESS	1.61E-01	OPERATOR FAILS TO RECOGNIZE NEED OF DEPRESSURIZATION
68	1.70E-11	%BOC-FDWB	1.70E-03	FEEDWATER LINE B BREAK OUTSIDE CONTAINMENT
		C63-CCFSOFTWARE	1.00E-04	Common cause failure of software
		C72-CCFSOFTWARE	1.00E-04	COMMON CAUSE FAILURE OF DPS PROCESSORS
69	1.65E-11	%T-IORV	2.83E-02	IORV
		B21-SQV-CC_ALL	1.50E-04	CCF of all components in group 'B21-SQV-CC'

Table 22.7-4
Top 200 Cutsets Contributing to Revision 3 CDF

#	Cutset Prob	Event	Event Prob	Description
		C12-BV_-RE-F065	4.84E-02	MISPOSITION OF LOCKED OPEN VALVE F065
		R16-BDC-TM-R16A3	5.00E-04	DC BUS R16-A3 IN MAINTENANCE
		XXX-XHE-FO-DEPRESS	1.61E-01	OPERATOR FAILS TO RECOGNIZE NEED OF DEPRESSURIZATION
70	1.65E-11	%T-IORV	2.83E-02	IORV
		B21-SQV-CC_ALL	1.50E-04	CCF of all components in group 'B21-SQV-CC'
		C12-BV_-RE-F065	4.84E-02	MISPOSITION OF LOCKED OPEN VALVE F065
		R16-BT_-TM-R16BTA3	5.00E-04	BATTERY R16-BTA3 IN TEST AND MAINTENANCE
		XXX-XHE-FO-DEPRESS	1.61E-01	OPERATOR FAILS TO RECOGNIZE NEED OF DEPRESSURIZATION
71	1.65E-11	%T-IORV	2.83E-02	IORV
		C12-BV_-RE-F065	4.84E-02	MISPOSITION OF LOCKED OPEN VALVE F065
		E50-SQV-CC-INJ_ALL	1.50E-04	CCF of all components in group 'E50-SQV-CC-INJ'
		R16-BDC-TM-R16A3	5.00E-04	DC BUS R16-A3 IN MAINTENANCE
		XXX-XHE-FO-DEPRESS	1.61E-01	OPERATOR FAILS TO RECOGNIZE NEED OF DEPRESSURIZATION
72	1.65E-11	%T-IORV	2.83E-02	IORV
		C12-BV_-RE-F065	4.84E-02	MISPOSITION OF LOCKED OPEN VALVE F065
		E50-SQV-CC-INJ_ALL	1.50E-04	CCF of all components in group 'E50-SQV-CC-INJ'

Table 22.7-4
Top 200 Cutsets Contributing to Revision 3 CDF

#	Cutset Prob	Event	Event Prob	Description
		R16-BT_-TM-R16BTA3	5.00E-04	BATTERY R16-BTA3 IN TEST AND MAINTENANCE
		XXX-XHE-FO-DEPRESS	1.61E-01	OPERATOR FAILS TO RECOGNIZE NEED OF DEPRESSURIZATION
73	1.64E-11	%T-IORV	2.83E-02	IORV
		C12-MOV-OO-F062	4.00E-03	MOTOR OPERATED VALVE F062 FAILS TO CLOSE
		E50-UV_-OC-INJ_ALL	3.01E-04	CCF of all components in group 'E50-UV_-OC-INJ'
		R10-LOSP-EPRI	3.00E-03	CONSEQUENTIAL LOSS OF PREFERRED OFFSITE POWER DUE TO A TRANSIENT
		XXX-XHE-FO-DEPRESS	1.61E-01	OPERATOR FAILS TO RECOGNIZE NEED OF DEPRESSURIZATION
74	1.64E-11	%T-IORV	2.83E-02	IORV
		E50-UV_-OC-INJ_ALL	3.01E-04	CCF of all components in group 'E50-UV_-OC-INJ'
		P41-FAN-FR_ALL	1.20E-05	CCF of all components in group 'P41-FAN-FR'
		XXX-XHE-FO-DEPRESS	1.61E-01	OPERATOR FAILS TO RECOGNIZE NEED OF DEPRESSURIZATION
75	1.64E-11	%T-GEN	1.18E+00	GENERAL TRANSIENT
		C12-ROD-CF-SCRAM	2.50E-07	CCF OF CONTROL RODS TO INSERT
		C41-SQV-CC_1_3	5.56E-05	CCF of two components: C41-SQV-CC-F003A & C41-SQV-CC-F003C
76	1.64E-11	%T-GEN	1.18E+00	GENERAL TRANSIENT
		C12-ROD-CF-SCRAM	2.50E-07	CCF OF CONTROL RODS TO INSERT

Table 22.7-4
Top 200 Cutsets Contributing to Revision 3 CDF

#	Cutset Prob	Event	Event Prob	Description
		C41-SQV-CC_2_4	5.56E-05	CCF of two components: C41-SQV-CC-F003B & C41-SQV-CC-F003D
77	1.51E-11	%T-LOPP-SC	1.04E-02	SWITCHYARD CENTERED LOSS OF PREFERRED POWER
		C63-CCFSOFTWARE_S	1.00E-04	Common Cause failure of Q-DCIS Software for Spurious
		E50-UV_-OC-INJ_ALL	3.01E-04	CCF of all components in group 'E50-UV_-OC-INJ'
		G21-BV_-RE-F334	4.84E-02	MISPOSITION OF VALVE F334
78	1.51E-11	%T-IORV	2.83E-02	IORV
		C12-BV_-RE-F003B	1.21E-02	MISPOSITION OF VALVE F003B
		C12-ROD-CF-SCRAM	2.50E-07	CCF OF CONTROL RODS TO INSERT
		N21-XHE-FO-FWRERUN	1.76E-01	OPERATOR FAILS TO RESTART FDW AFTER RUNBACK - ATWS
79	1.51E-11	%T-IORV	2.83E-02	IORV
		C12-BV_-RE-F018A	1.21E-02	MISPOSITION OF VALVE F018A
		C12-ROD-CF-SCRAM	2.50E-07	CCF OF CONTROL RODS TO INSERT
		N21-XHE-FO-FWRERUN	1.76E-01	OPERATOR FAILS TO RESTART FDW AFTER RUNBACK - ATWS
80	1.51E-11	%T-IORV	2.83E-02	IORV
		C12-BV_-RE-F018B	1.21E-02	MISPOSITION OF VALVE FO18B
		C12-ROD-CF-SCRAM	2.50E-07	CCF OF CONTROL RODS TO INSERT

Table 22.7-4
Top 200 Cutsets Contributing to Revision 3 CDF

#	Cutset Prob	Event	Event Prob	Description
		N21-XHE-FO-FWRERUN	1.76E-01	OPERATOR FAILS TO RESTART FDW AFTER RUNBACK - ATWS
81	1.51E-11	%T-IORV	2.83E-02	IORV
		C12-BV_-RE-F021A	1.21E-02	MISPOSITION OF VALVE F021A
		C12-ROD-CF-SCRAM	2.50E-07	CCF OF CONTROL RODS TO INSERT
		N21-XHE-FO-FWRERUN	1.76E-01	OPERATOR FAILS TO RESTART FDW AFTER RUNBACK - ATWS
82	1.51E-11	%T-IORV	2.83E-02	IORV
		C12-BV_-RE-F021B	1.21E-02	MISPOSITION OF VALVE F021B
		C12-ROD-CF-SCRAM	2.50E-07	CCF OF CONTROL RODS TO INSERT
		N21-XHE-FO-FWRERUN	1.76E-01	OPERATOR FAILS TO RESTART FDW AFTER RUNBACK - ATWS
83	1.48E-11	%T-IA	1.02E-02	COMPLETE LOSS OF AIR SYSTEMS
		C63-CCFSOFTWARE_S	1.00E-04	Common Cause failure of Q-DCIS Software for Spurious
		E50-UV_-OC-INJ_ALL	3.01E-04	CCF of all components in group 'E50-UV_-OC-INJ'
		G21-BV_-RE-F334	4.84E-02	MISPOSITION OF VALVE F334
84	1.45E-11	%ML-L	3.22E-05	MEDIUM LIQUID LOCA (NO RWCU BREAK)
		B21-SQV-CC_ALL	1.50E-04	CCF of all components in group 'B21-SQV-CC'
		R10-LOSP-EPRI	3.00E-03	CONSEQUENTIAL LOSS OF PREFERRED OFFSITE POWER DUE TO A TRANSIENT

Table 22.7-4
Top 200 Cutsets Contributing to Revision 3 CDF

#	Cutset Prob	Event	Event Prob	Description
85	1.36E-11	%T-IORV	2.83E-02	IORV
		E50-UV_-OC-INJ_ALL	3.01E-04	CCF of all components in group 'E50-UV_-OC-INJ'
		R10-LOSP-EPRI	3.00E-03	CONSEQUENTIAL LOSS OF PREFERRED OFFSITE POWER DUE TO A TRANSIENT
		R21-DG_-FR-DGA	5.76E-02	DIESEL GENERATOR "A" FAILS TO RUN GIVEN START
		R21-DG_-FR-DGB	5.76E-02	DIESEL GENERATOR "B" FAILS TO RUN GIVEN START
		XXX-XHE-FO-DEPRESS	1.61E-01	OPERATOR FAILS TO RECOGNIZE NEED OF DEPRESSURIZATION
86	1.35E-11	%T-LOPP-GR	1.86E-02	GRID RELATED LOSS OF PREFERRED POWER
		B21-SQV-CC_ALL	1.50E-04	CCF of all components in group 'B21-SQV-CC'
		C63-CCFSOFTWARE_S	1.00E-04	Common Cause failure of Q-DCIS Software for Spurious
		G21-BV_-RE-F334	4.84E-02	MISPOSITION OF VALVE F334
87	1.35E-11	%T-LOPP-GR	1.86E-02	GRID RELATED LOSS OF PREFERRED POWER
		C63-CCFSOFTWARE_S	1.00E-04	Common Cause failure of Q-DCIS Software for Spurious
		E50-SQV-CC-INJ_ALL	1.50E-04	CCF of all components in group 'E50-SQV-CC-INJ'
		G21-BV_-RE-F334	4.84E-02	MISPOSITION OF VALVE F334
88	1.33E-11	%T-GEN	1.18E+00	GENERAL TRANSIENT
		C12-ROD-CF-SCRAM	2.50E-07	CCF OF CONTROL RODS TO INSERT

Table 22.7-4
Top 200 Cutsets Contributing to Revision 3 CDF

#	Cutset Prob	Event	Event Prob	Description
		C71-SLU-FC-N_ALL	4.50E-05	CCF of all components in group 'C71-SLU-FC-N'
89	1.33E-11	%T-GEN	1.18E+00	GENERAL TRANSIENT
		C12-ROD-CF-SCRAM	2.50E-07	CCF OF CONTROL RODS TO INSERT
		C71-SLU-FC-S_ALL	4.50E-05	CCF of all components in group 'C71-SLU-FC-S'
90	1.17E-11	%T-LOPP-WR	4.83E-03	WEATHER RELATED LOSS OF PREFERRED POWER
		B21-SQV-CC_ALL	1.50E-04	CCF of all components in group 'B21-SQV-CC'
		C63-CCFSOFTWARE_S	1.00E-04	Common Cause failure of Q-DCIS Software for Spurious
		XXX-XHE-FO-DEPRESS	1.61E-01	OPERATOR FAILS TO RECOGNIZE NEED OF DEPRESSURIZATION
91	1.17E-11	%T-LOPP-WR	4.83E-03	WEATHER RELATED LOSS OF PREFERRED POWER
		C63-CCFSOFTWARE_S	1.00E-04	Common Cause failure of Q-DCIS Software for Spurious
		E50-SQV-CC-INJ_ALL	1.50E-04	CCF of all components in group 'E50-SQV-CC-INJ'
		XXX-XHE-FO-LPMAKEUP	1.61E-01	OP. FAILS TO RECOG. NEED FOR LOW PRESS. MAKEUP AFTER DEPRESSURIZATION
92	1.14E-11	%T-GEN	1.18E+00	GENERAL TRANSIENT
		C63-CCFSOFTWARE_S	1.00E-04	Common Cause failure of Q-DCIS Software for Spurious
		E50-UV_-OC-INJ_ALL	3.01E-04	CCF of all components in group 'E50-UV_-OC-INJ'
		N21-ACV-CC-F0016	2.00E-03	AIR OPERATED VALVE F0016 FAILS TO OPEN

Table 22.7-4
Top 200 Cutsets Contributing to Revision 3 CDF

#	Cutset Prob	Event	Event Prob	Description
		XXX-XHE-FO-DEPRESS	1.61E-01	OPERATOR FAILS TO RECOGNIZE NEED OF DEPRESSURIZATION
93	1.11E-11	%T-IORV	2.83E-02	IORV
		E50-UV_-OC-INJ_ALL	3.01E-04	CCF of all components in group 'E50-UV_-OC-INJ'
		P41-SYS-FC-HVACPSW-A	1.00E-03	PSW-A ROOM COOLING FAILURE
		P41-TRN-RE-PUMP2B	8.07E-03	FAILURE TO RESTORE PSW PUMP 2B
		XXX-XHE-FO-DEPRESS	1.61E-01	OPERATOR FAILS TO RECOGNIZE NEED OF DEPRESSURIZATION
94	1.11E-11	%T-IORV	2.83E-02	IORV
		E50-UV_-OC-INJ_ALL	3.01E-04	CCF of all components in group 'E50-UV_-OC-INJ'
		P41-SYS-FC-HVACPSW-B	1.00E-03	PSW-B ROOM COOLING FAILURE
		P41-TRN-RE-PUMP2A	8.07E-03	FAILURE TO RESTORE PSW PUMP 2A
		XXX-XHE-FO-DEPRESS	1.61E-01	OPERATOR FAILS TO RECOGNIZE NEED OF DEPRESSURIZATION
95	1.10E-11	%T-IORV	2.83E-02	IORV
		C12-MOV-OO-F062	4.00E-03	MOTOR OPERATED VALVE F062 FAILS TO CLOSE
		E50-UV_-OC-INJ_ALL	3.01E-04	CCF of all components in group 'E50-UV_-OC-INJ'
		N21-ACV-CC-F0016	2.00E-03	AIR OPERATED VALVE F0016 FAILS TO OPEN
		XXX-XHE-FO-DEPRESS	1.61E-01	OPERATOR FAILS TO RECOGNIZE NEED OF DEPRESSURIZATION

Table 22.7-4
Top 200 Cutsets Contributing to Revision 3 CDF

#	Cutset Prob	Event	Event Prob	Description
96	1.09E-11	%T-IORV	2.83E-02	IORV
		E50-UV_-OC-INJ_ALL	3.01E-04	CCF of all components in group 'E50-UV_-OC-INJ'
		R10-LOSP-EPRI	3.00E-03	CONSEQUENTIAL LOSS OF PREFERRED OFFSITE POWER DUE TO A TRANSIENT
		R21-DG_-FR-DGA	5.76E-02	DIESEL GENERATOR "A" FAILS TO RUN GIVEN START
		R21-DG_-TM-DGB	4.60E-02	STANDBY DIESEL GENERATOR "B" IN MAINTENANCE
		XXX-XHE-FO-DEPRESS	1.61E-01	OPERATOR FAILS TO RECOGNIZE NEED OF DEPRESSURIZATION
97	1.09E-11	%T-IORV	2.83E-02	IORV
		E50-UV_-OC-INJ_ALL	3.01E-04	CCF of all components in group 'E50-UV_-OC-INJ'
		R10-LOSP-EPRI	3.00E-03	CONSEQUENTIAL LOSS OF PREFERRED OFFSITE POWER DUE TO A TRANSIENT
		R21-DG_-FR-DGB	5.76E-02	DIESEL GENERATOR "B" FAILS TO RUN GIVEN START
		R21-DG_-TM-DGA	4.60E-02	STANDBY DIESEL GENERATOR "A" IN MAINTENANCE
		XXX-XHE-FO-DEPRESS	1.61E-01	OPERATOR FAILS TO RECOGNIZE NEED OF DEPRESSURIZATION
98	1.00E-11	%T-LOPP-PC	2.07E-03	PLANT CENTERED LOSS OF PREFERRED POWER
		C63-CCFSOFTWARE_S	1.00E-04	Common Cause failure of Q-DCIS Software for Spurious
		E50-UV_-OC-INJ_ALL	3.01E-04	CCF of all components in group 'E50-UV_-OC-INJ'
		XXX-XHE-FO-LPMAKEUP	1.61E-01	OP. FAILS TO RECOG. NEED FOR LOW PRESS. MAKEUP AFTER DEPRESSURIZATION

Table 22.7-4
Top 200 Cutsets Contributing to Revision 3 CDF

#	Cutset Prob	Event	Event Prob	Description
99	9.96E-12	%T-IORV	2.83E-02	IORV
		C12-BV_-RE-F065	4.84E-02	MISPOSITION OF LOCKED OPEN VALVE F065
		E50-UV_-OC-INJ_ALL	3.01E-04	CCF of all components in group 'E50-UV_-OC-INJ'
		G21-BV_-RE-F334	4.84E-02	MISPOSITION OF VALVE F334
		R16-BDC-TM-R16A3	5.00E-04	DC BUS R16-A3 IN MAINTENANCE
100	9.96E-12	%T-IORV	2.83E-02	IORV
		C12-BV_-RE-F065	4.84E-02	MISPOSITION OF LOCKED OPEN VALVE F065
		E50-UV_-OC-INJ_ALL	3.01E-04	CCF of all components in group 'E50-UV_-OC-INJ'
		G21-BV_-RE-F334	4.84E-02	MISPOSITION OF VALVE F334
		R16-BT_-TM-R16BTA3	5.00E-04	BATTERY R16-BTA3 IN TEST AND MAINTENANCE
101	9.94E-12	%T-IORV	2.83E-02	IORV
		B21-SQV-CC_ALL	1.50E-04	CCF of all components in group 'B21-SQV-CC'
		BOPCWS-SYS-FAILS	1.00E-03	BALANCE OF PLANT CHILLED WATER SYSTEM FAILS
		C12-BV_-RE-F065	4.84E-02	MISPOSITION OF LOCKED OPEN VALVE F065
		G21-BV_-RE-F334	4.84E-02	MISPOSITION OF VALVE F334
102	9.94E-12	%T-IORV	2.83E-02	IORV

Table 22.7-4
Top 200 Cutsets Contributing to Revision 3 CDF

#	Cutset Prob	Event	Event Prob	Description
		BOPCWS-SYS-FAILS	1.00E-03	BALANCE OF PLANT CHILLED WATER SYSTEM FAILS
		C12-BV_-RE-F065	4.84E-02	MISPOSITION OF LOCKED OPEN VALVE F065
		E50-SQV-CC-INJ_ALL	1.50E-04	CCF of all components in group 'E50-SQV-CC-INJ'
		G21-BV_-RE-F334	4.84E-02	MISPOSITION OF VALVE F334
103	9.70E-12	%T-SW	9.70E-04	COMPLETE LOSS OF PSWS
		C63-CCFSOFTWARE	1.00E-04	Common cause failure of software
		C72-CCFSOFTWARE	1.00E-04	COMMON CAUSE FAILURE OF DPS PROCESSORS
104	9.66E-12	%ML-L	3.22E-05	MEDIUM LIQUID LOCA (NO RWCU BREAK)
		B21-SQV-CC_ALL	1.50E-04	CCF of all components in group 'B21-SQV-CC'
		N21-ACV-CC-F0016	2.00E-03	AIR OPERATED VALVE F0016 FAILS TO OPEN
105	9.63E-12	%T-IORV	2.83E-02	IORV
		C12-BV_-RE-F013A	4.84E-02	MISPOSITION OF VALVE F013A
		C12-BV_-RE-F013B	4.84E-02	MISPOSITION OF VALVE F013B
		E50-UV_-OC-INJ_ALL	3.01E-04	CCF of all components in group 'E50-UV_-OC-INJ'
		R10-LOSP-EPRI	3.00E-03	CONSEQUENTIAL LOSS OF PREFERRED OFFSITE POWER DUE TO A TRANSIENT
		XXX-XHE-FO-DEPRESS	1.61E-01	OPERATOR FAILS TO RECOGNIZE NEED OF DEPRESSURIZATION

Table 22.7-4
Top 200 Cutsets Contributing to Revision 3 CDF

#	Cutset Prob	Event	Event Prob	Description
106	9.63E-12	%T-IORV	2.83E-02	IORV
		C12-BV_-RE-F013A	4.84E-02	MISPOSITION OF VALVE F013A
		C12-BV_-RE-F015B	4.84E-02	MISPOSITION OF VALVE F015B
		E50-UV_-OC-INJ_ALL	3.01E-04	CCF of all components in group 'E50-UV_-OC-INJ'
		R10-LOSP-EPRI	3.00E-03	CONSEQUENTIAL LOSS OF PREFERRED OFFSITE POWER DUE TO A TRANSIENT
		XXX-XHE-FO-DEPRESS	1.61E-01	OPERATOR FAILS TO RECOGNIZE NEED OF DEPRESSURIZATION
107	9.63E-12	%T-IORV	2.83E-02	IORV
		C12-BV_-RE-F013B	4.84E-02	MISPOSITION OF VALVE F013B
		C12-BV_-RE-F015A	4.84E-02	MISPOSITION OF VALVE F015A
		E50-UV_-OC-INJ_ALL	3.01E-04	CCF of all components in group 'E50-UV_-OC-INJ'
		R10-LOSP-EPRI	3.00E-03	CONSEQUENTIAL LOSS OF PREFERRED OFFSITE POWER DUE TO A TRANSIENT
		XXX-XHE-FO-DEPRESS	1.61E-01	OPERATOR FAILS TO RECOGNIZE NEED OF DEPRESSURIZATION
108	9.63E-12	%T-IORV	2.83E-02	IORV
		C12-BV_-RE-F015A	4.84E-02	MISPOSITION OF VALVE F015A
		C12-BV_-RE-F015B	4.84E-02	MISPOSITION OF VALVE F015B
		E50-UV_-OC-INJ_ALL	3.01E-04	CCF of all components in group 'E50-UV_-OC-INJ'

Table 22.7-4
Top 200 Cutsets Contributing to Revision 3 CDF

#	Cutset Prob	Event	Event Prob	Description
		R10-LOSP-EPRI	3.00E-03	CONSEQUENTIAL LOSS OF PREFERRED OFFSITE POWER DUE TO A TRANSIENT
		XXX-XHE-FO-DEPRESS	1.61E-01	OPERATOR FAILS TO RECOGNIZE NEED OF DEPRESSURIZATION
109	9.38E-12	%T-FDW	1.17E-01	LOSS OF FEEDWATER
		C63-CCFSOFTWARE_S	1.00E-04	Common Cause failure of Q-DCIS Software for Spurious
		E50-UV_-OC-INJ_ALL	3.01E-04	CCF of all components in group 'E50-UV_-OC-INJ'
		G21-MOV-CC-2_1_2	2.67E-03	CCF of two components: G21-MOV-CC-F332A & G21-MOV-CC-F332B
110	9.30E-12	%T-IORV	2.83E-02	IORV
		B21-SQV-CC_ALL	1.50E-04	CCF of all components in group 'B21-SQV-CC'
		R10-LOSP-EPRI	3.00E-03	CONSEQUENTIAL LOSS OF PREFERRED OFFSITE POWER DUE TO A TRANSIENT
		R21-DG_-FR-CCF_1_2	4.54E-03	CCF of two components: R21-DG_-FR-DGA & R21-DG_-FR-DGB
		XXX-XHE-FO-DEPRESS	1.61E-01	OPERATOR FAILS TO RECOGNIZE NEED OF DEPRESSURIZATION
111	9.30E-12	%T-IORV	2.83E-02	IORV
		E50-SQV-CC-INJ_ALL	1.50E-04	CCF of all components in group 'E50-SQV-CC-INJ'
		R10-LOSP-EPRI	3.00E-03	CONSEQUENTIAL LOSS OF PREFERRED OFFSITE POWER DUE TO A TRANSIENT
		R21-DG_-FR-CCF_1_2	4.54E-03	CCF of two components: R21-DG_-FR-DGA & R21-DG_-FR-DGB
		XXX-XHE-FO-DEPRESS	1.61E-01	OPERATOR FAILS TO RECOGNIZE NEED OF DEPRESSURIZATION

Table 22.7-4
Top 200 Cutsets Contributing to Revision 3 CDF

#	Cutset Prob	Event	Event Prob	Description
112	9.00E-12	%T-LOPP-GR	1.86E-02	GRID RELATED LOSS OF PREFERRED POWER
		C12-BV_-RE-F065	4.84E-02	MISPOSITION OF LOCKED OPEN VALVE F065
		C63-CCFSOFTWARE	1.00E-04	Common cause failure of software
		C72-CCFSOFTWARE	1.00E-04	COMMON CAUSE FAILURE OF DPS PROCESSORS
113	8.96E-12	%T-PCS	1.97E-01	TRANSIENT WITH PCS UNAVAILABLE
		C63-CCFSOFTWARE	1.00E-04	Common cause failure of software
		R13-XFL-LP-CCFNSR2_ALL	4.55E-07	CCF of all components in group 'R13-XFL-LP-CCFNSR2'
114	8.55E-12	%T-GEN	1.18E+00	GENERAL TRANSIENT
		B21-SQV-CC_ALL	1.50E-04	CCF of all components in group 'B21-SQV-CC'
		C63-CCFSOFTWARE_S	1.00E-04	Common Cause failure of Q-DCIS Software for Spurious
		R10-LOSP-EPRI	3.00E-03	CONSEQUENTIAL LOSS OF PREFERRED OFFSITE POWER DUE TO A TRANSIENT
		XXX-XHE-FO-LPMAKEUP	1.61E-01	OP. FAILS TO RECOG. NEED FOR LOW PRESS. MAKEUP AFTER DEPRESSURIZATION
115	8.55E-12	%T-GEN	1.18E+00	GENERAL TRANSIENT
		B21-SQV-CC_ALL	1.50E-04	CCF of all components in group 'B21-SQV-CC'
		C63-CCFSOFTWARE_S	1.00E-04	Common Cause failure of Q-DCIS Software for Spurious
		R10-LOSP-EPRI	3.00E-03	CONSEQUENTIAL LOSS OF PREFERRED OFFSITE POWER DUE TO A TRANSIENT

Table 22.7-4
Top 200 Cutsets Contributing to Revision 3 CDF

#	Cutset Prob	Event	Event Prob	Description
		XXX-XHE-FO-DEPRESS	1.61E-01	OPERATOR FAILS TO RECOGNIZE NEED OF DEPRESSURIZATION
116	8.55E-12	%T-GEN	1.18E+00	GENERAL TRANSIENT
		C63-CCFSOFTWARE_S	1.00E-04	Common Cause failure of Q-DCIS Software for Spurious
		E50-SQV-CC-INJ_ALL	1.50E-04	CCF of all components in group 'E50-SQV-CC-INJ'
		R10-LOSP-EPRI	3.00E-03	CONSEQUENTIAL LOSS OF PREFERRED OFFSITE POWER DUE TO A TRANSIENT
		XXX-XHE-FO-DEPRESS	1.61E-01	OPERATOR FAILS TO RECOGNIZE NEED OF DEPRESSURIZATION
117	8.23E-12	%BOC-FDWB	1.70E-03	FEEDWATER LINE B BREAK OUTSIDE CONTAINMENT
		B32-NONCONDENSE	1.00E+00	Non condensable gasses form in ICS sufficiently to require venting
		C63-CCFSOFTWARE	1.00E-04	Common cause failure of software
		E50-UV_-OC-INJ_ALL	3.01E-04	CCF of all components in group 'E50-UV_-OC-INJ'
		XXX-XHE-FO-DEPRESS	1.61E-01	OPERATOR FAILS TO RECOGNIZE NEED OF DEPRESSURIZATION
118	8.23E-12	%BOC-FDWB	1.70E-03	FEEDWATER LINE B BREAK OUTSIDE CONTAINMENT
		C63-CCFSOFTWARE_S	1.00E-04	Common Cause failure of Q-DCIS Software for Spurious
		E50-UV_-OC-INJ_ALL	3.01E-04	CCF of all components in group 'E50-UV_-OC-INJ'
		XXX-XHE-FO-DEPRESS	1.61E-01	OPERATOR FAILS TO RECOGNIZE NEED OF DEPRESSURIZATION
119	8.22E-12	%T-IORV	2.83E-02	IORV

Table 22.7-4
Top 200 Cutsets Contributing to Revision 3 CDF

#	Cutset Prob	Event	Event Prob	Description
		E50-UV_-OC-INJ_ALL	3.01E-04	CCF of all components in group 'E50-UV_-OC-INJ'
		P21-ACV-OO-F0004	2.00E-03	AIR OPERATED VALVE F0004 FAILS TO CLOSE
		R10-LOSP-EPRI	3.00E-03	CONSEQUENTIAL LOSS OF PREFERRED OFFSITE POWER DUE TO A TRANSIENT
		XXX-XHE-FO-DEPRESS	1.61E-01	OPERATOR FAILS TO RECOGNIZE NEED OF DEPRESSURIZATION
120	8.22E-12	%T-IORV	2.83E-02	IORV
		E50-UV_-OC-INJ_ALL	3.01E-04	CCF of all components in group 'E50-UV_-OC-INJ'
		P21-ACV-OO-F0027	2.00E-03	AIR OPERATED VALVE F0027 FAILS TO CLOSE
		R10-LOSP-EPRI	3.00E-03	CONSEQUENTIAL LOSS OF PREFERRED OFFSITE POWER DUE TO A TRANSIENT
		XXX-XHE-FO-DEPRESS	1.61E-01	OPERATOR FAILS TO RECOGNIZE NEED OF DEPRESSURIZATION
121	8.22E-12	%T-IORV	2.83E-02	IORV
		E50-UV_-OC-INJ_ALL	3.01E-04	CCF of all components in group 'E50-UV_-OC-INJ'
		P21-ACV-OO-F0061	2.00E-03	AIR OPERATED VALVE F0061 FAILS TO CLOSE
		R10-LOSP-EPRI	3.00E-03	CONSEQUENTIAL LOSS OF PREFERRED OFFSITE POWER DUE TO A TRANSIENT
		XXX-XHE-FO-DEPRESS	1.61E-01	OPERATOR FAILS TO RECOGNIZE NEED OF DEPRESSURIZATION
122	8.20E-12	%T-IORV	2.83E-02	IORV
		B21-SQV-CC_ALL	1.50E-04	CCF of all components in group 'B21-SQV-CC'

Table 22.7-4
Top 200 Cutsets Contributing to Revision 3 CDF

#	Cutset Prob	Event	Event Prob	Description
		C12-MOV-OO-F062	4.00E-03	MOTOR OPERATED VALVE F062 FAILS TO CLOSE
		R10-LOSP-EPRI	3.00E-03	CONSEQUENTIAL LOSS OF PREFERRED OFFSITE POWER DUE TO A TRANSIENT
		XXX-XHE-FO-DEPRESS	1.61E-01	OPERATOR FAILS TO RECOGNIZE NEED OF DEPRESSURIZATION
123	8.20E-12	%T-IORV	2.83E-02	IORV
		B21-SQV-CC_ALL	1.50E-04	CCF of all components in group 'B21-SQV-CC'
		P41-FAN-FR_ALL	1.20E-05	CCF of all components in group 'P41-FAN-FR'
		XXX-XHE-FO-DEPRESS	1.61E-01	OPERATOR FAILS TO RECOGNIZE NEED OF DEPRESSURIZATION
124	8.20E-12	%T-IORV	2.83E-02	IORV
		C12-MOV-OO-F062	4.00E-03	MOTOR OPERATED VALVE F062 FAILS TO CLOSE
		E50-SQV-CC-INJ_ALL	1.50E-04	CCF of all components in group 'E50-SQV-CC-INJ'
		R10-LOSP-EPRI	3.00E-03	CONSEQUENTIAL LOSS OF PREFERRED OFFSITE POWER DUE TO A TRANSIENT
		XXX-XHE-FO-DEPRESS	1.61E-01	OPERATOR FAILS TO RECOGNIZE NEED OF DEPRESSURIZATION
125	8.20E-12	%T-IORV	2.83E-02	IORV
		E50-SQV-CC-INJ_ALL	1.50E-04	CCF of all components in group 'E50-SQV-CC-INJ'
		P41-FAN-FR_ALL	1.20E-05	CCF of all components in group 'P41-FAN-FR'
		XXX-XHE-FO-DEPRESS	1.61E-01	OPERATOR FAILS TO RECOGNIZE NEED OF DEPRESSURIZATION

Table 22.7-4
Top 200 Cutsets Contributing to Revision 3 CDF

#	Cutset Prob	Event	Event Prob	Description
126	8.05E-12	%ML-L	3.22E-05	MEDIUM LIQUID LOCA (NO RWCU BREAK)
		C12-ROD-CF-SCRAM	2.50E-07	CCF OF CONTROL RODS TO INSERT
127	7.78E-12	%T-IORV	2.83E-02	IORV
		E50-UV_-OC-INJ_ALL	3.01E-04	CCF of all components in group 'E50-UV_-OC-INJ'
		P41-STR-PG_ALL	5.68E-06	CCF of all components in group 'P41-STR-PG'
		XXX-XHE-FO-DEPRESS	1.61E-01	OPERATOR FAILS TO RECOGNIZE NEED OF DEPRESSURIZATION
128	7.73E-12	%T-IORV	2.83E-02	IORV
		C12-ROD-CF-SCRAM	2.50E-07	CCF OF CONTROL RODS TO INSERT
		C72-LDD-FC-FWRB1	1.09E-03	LOAD DRIVER FAILS TO ENERGIZE FWRB CIRCUIT
129	7.73E-12	%T-IORV	2.83E-02	IORV
		C12-ROD-CF-SCRAM	2.50E-07	CCF OF CONTROL RODS TO INSERT
		C72-LDD-FC-FWRB2	1.09E-03	LOAD DRIVER FAILS TO ENERGIZE FWRB CIRCUIT
130	7.55E-12	%T-LOPP-SC	1.04E-02	SWITCHYARD CENTERED LOSS OF PREFERRED POWER
		B21-SQV-CC_ALL	1.50E-04	CCF of all components in group 'B21-SQV-CC'
		C63-CCFSOFTWARE_S	1.00E-04	Common Cause failure of Q-DCIS Software for Spurious
		G21-BV_-RE-F334	4.84E-02	MISPOSITION OF VALVE F334

Table 22.7-4
Top 200 Cutsets Contributing to Revision 3 CDF

#	Cutset Prob	Event	Event Prob	Description
131	7.55E-12	%T-LOPP-SC	1.04E-02	SWITCHYARD CENTERED LOSS OF PREFERRED POWER
		C63-CCFSOFTWARE_S	1.00E-04	Common Cause failure of Q-DCIS Software for Spurious
		E50-SQV-CC-INJ_ALL	1.50E-04	CCF of all components in group 'E50-SQV-CC-INJ'
		G21-BV_-RE-F334	4.84E-02	MISPOSITION OF VALVE F334
132	7.41E-12	%T-IA	1.02E-02	COMPLETE LOSS OF AIR SYSTEMS
		B21-SQV-CC_ALL	1.50E-04	CCF of all components in group 'B21-SQV-CC'
		C63-CCFSOFTWARE_S	1.00E-04	Common Cause failure of Q-DCIS Software for Spurious
		G21-BV_-RE-F334	4.84E-02	MISPOSITION OF VALVE F334
133	7.41E-12	%T-IA	1.02E-02	COMPLETE LOSS OF AIR SYSTEMS
		C63-CCFSOFTWARE_S	1.00E-04	Common Cause failure of Q-DCIS Software for Spurious
		E50-SQV-CC-INJ_ALL	1.50E-04	CCF of all components in group 'E50-SQV-CC-INJ'
		G21-BV_-RE-F334	4.84E-02	MISPOSITION OF VALVE F334
134	7.39E-12	%T-PCS	1.97E-01	TRANSIENT WITH PCS UNAVAILABLE
		C12-ROD-CF-SCRAM	2.50E-07	CCF OF CONTROL RODS TO INSERT
		C41-SQV-CC_ALL	1.50E-04	CCF of all components in group 'C41-SQV-CC'
135	7.08E-12	%T-GEN	1.18E+00	GENERAL TRANSIENT

Table 22.7-4
Top 200 Cutsets Contributing to Revision 3 CDF

#	Cutset Prob	Event	Event Prob	Description
		C12-ROD-CF-SCRAM	2.50E-07	CCF OF CONTROL RODS TO INSERT
		C41-ACV-OC-F002A	2.40E-05	AIR OPERATED VALVE F002A FAILS TO REMAIN OPEN
136	7.08E-12	%T-GEN	1.18E+00	GENERAL TRANSIENT
		C12-ROD-CF-SCRAM	2.50E-07	CCF OF CONTROL RODS TO INSERT
		C41-ACV-OC-F002B	2.40E-05	AIR OPERATED VALVE F002B FAILS TO REMAIN OPEN
137	7.08E-12	%T-GEN	1.18E+00	GENERAL TRANSIENT
		C12-ROD-CF-SCRAM	2.50E-07	CCF OF CONTROL RODS TO INSERT
		C41-ACV-OC-F002C	2.40E-05	AIR OPERATED VALVE F002C FAILS TO REMAIN OPEN
138	7.08E-12	%T-GEN	1.18E+00	GENERAL TRANSIENT
		C12-ROD-CF-SCRAM	2.50E-07	CCF OF CONTROL RODS TO INSERT
		C41-ACV-OC-F002D	2.40E-05	AIR OPERATED VALVE F002D FAILS TO REMAIN OPEN
139	7.03E-12	%T-LOPP-WR	4.83E-03	WEATHER RELATED LOSS OF PREFERRED POWER
		C63-CCFSOFTWARE_S	1.00E-04	Common Cause failure of Q-DCIS Software for Spurious
		E50-UV_-OC-INJ_ALL	3.01E-04	CCF of all components in group 'E50-UV_-OC-INJ'
		G21-BV_-RE-F334	4.84E-02	MISPOSITION OF VALVE F334
140	6.80E-12	%T-IORV	2.83E-02	IORV

Table 22.7-4
Top 200 Cutsets Contributing to Revision 3 CDF

#	Cutset Prob	Event	Event Prob	Description
		B21-SQV-CC_ALL	1.50E-04	CCF of all components in group 'B21-SQV-CC'
		R10-LOSP-EPRI	3.00E-03	CONSEQUENTIAL LOSS OF PREFERRED OFFSITE POWER DUE TO A TRANSIENT
		R21-DG_-FR-DGA	5.76E-02	DIESEL GENERATOR "A" FAILS TO RUN GIVEN START
		R21-DG_-FR-DGB	5.76E-02	DIESEL GENERATOR "B" FAILS TO RUN GIVEN START
		XXX-XHE-FO-DEPRESS	1.61E-01	OPERATOR FAILS TO RECOGNIZE NEED OF DEPRESSURIZATION
141	6.80E-12	%T-IORV	2.83E-02	IORV
		E50-SQV-CC-INJ_ALL	1.50E-04	CCF of all components in group 'E50-SQV-CC-INJ'
		R10-LOSP-EPRI	3.00E-03	CONSEQUENTIAL LOSS OF PREFERRED OFFSITE POWER DUE TO A TRANSIENT
		R21-DG_-FR-DGA	5.76E-02	DIESEL GENERATOR "A" FAILS TO RUN GIVEN START
		R21-DG_-FR-DGB	5.76E-02	DIESEL GENERATOR "B" FAILS TO RUN GIVEN START
		XXX-XHE-FO-DEPRESS	1.61E-01	OPERATOR FAILS TO RECOGNIZE NEED OF DEPRESSURIZATION
142	6.67E-12	%LL-S-FDWA	5.55E-06	LARGE STEAM LOCA IN FW LINE A
		C12-MOV-OO-F062	4.00E-03	MOTOR OPERATED VALVE F062 FAILS TO CLOSE
		E50-UV_-OC-INJ_ALL	3.01E-04	CCF of all components in group 'E50-UV_-OC-INJ'
143	6.50E-12	%T-FDW	1.17E-01	LOSS OF FEEDWATER
		C63-CCFSOFTWARE_S	1.00E-04	Common Cause failure of Q-DCIS Software for Spurious

Table 22.7-4
Top 200 Cutsets Contributing to Revision 3 CDF

#	Cutset Prob	Event	Event Prob	Description
		T10-VB_-CC_1_2_3	5.56E-07	CCF of three components: T10-VB_-CC-VB1 & T10-VB_-CC-VB2 & T10-VB_-CC-VB3
144	6.42E-12	%T-IORV	2.83E-02	IORV
		C12-BV_-RE-F013A	4.84E-02	MISPOSITION OF VALVE F013A
		C12-BV_-RE-F013B	4.84E-02	MISPOSITION OF VALVE F013B
		E50-UV_-OC-INJ_ALL	3.01E-04	CCF of all components in group 'E50-UV_-OC-INJ'
		N21-ACV-CC-F0016	2.00E-03	AIR OPERATED VALVE F0016 FAILS TO OPEN
		XXX-XHE-FO-DEPRESS	1.61E-01	OPERATOR FAILS TO RECOGNIZE NEED OF DEPRESSURIZATION
145	6.42E-12	%T-IORV	2.83E-02	IORV
		C12-BV_-RE-F013A	4.84E-02	MISPOSITION OF VALVE F013A
		C12-BV_-RE-F015B	4.84E-02	MISPOSITION OF VALVE F015B
		E50-UV_-OC-INJ_ALL	3.01E-04	CCF of all components in group 'E50-UV_-OC-INJ'
		N21-ACV-CC-F0016	2.00E-03	AIR OPERATED VALVE F0016 FAILS TO OPEN
		XXX-XHE-FO-DEPRESS	1.61E-01	OPERATOR FAILS TO RECOGNIZE NEED OF DEPRESSURIZATION
146	6.42E-12	%T-IORV	2.83E-02	IORV
		C12-BV_-RE-F013B	4.84E-02	MISPOSITION OF VALVE F013B
		C12-BV_-RE-F015A	4.84E-02	MISPOSITION OF VALVE F015A

Table 22.7-4
Top 200 Cutsets Contributing to Revision 3 CDF

#	Cutset Prob	Event	Event Prob	Description
		E50-UV_-OC-INJ_ALL	3.01E-04	CCF of all components in group 'E50-UV_-OC-INJ'
		N21-ACV-CC-F0016	2.00E-03	AIR OPERATED VALVE F0016 FAILS TO OPEN
		XXX-XHE-FO-DEPRESS	1.61E-01	OPERATOR FAILS TO RECOGNIZE NEED OF DEPRESSURIZATION
147	6.42E-12	%T-IORV	2.83E-02	IORV
		C12-BV_-RE-F015A	4.84E-02	MISPOSITION OF VALVE F015A
		C12-BV_-RE-F015B	4.84E-02	MISPOSITION OF VALVE F015B
		E50-UV_-OC-INJ_ALL	3.01E-04	CCF of all components in group 'E50-UV_-OC-INJ'
		N21-ACV-CC-F0016	2.00E-03	AIR OPERATED VALVE F0016 FAILS TO OPEN
		XXX-XHE-FO-DEPRESS	1.61E-01	OPERATOR FAILS TO RECOGNIZE NEED OF DEPRESSURIZATION
148	6.09E-12	%T-IORV	2.83E-02	IORV
		E50-UV_-OC-INJ_ALL	3.01E-04	CCF of all components in group 'E50-UV_-OC-INJ'
		P41-FAN-FR_1_2	4.44E-06	CCF of two components: P41-FAN-FR-0001A & P41-FAN-FR-0001B
		XXX-XHE-FO-DEPRESS	1.61E-01	OPERATOR FAILS TO RECOGNIZE NEED OF DEPRESSURIZATION
149	6.09E-12	%T-IORV	2.83E-02	IORV
		E50-UV_-OC-INJ_ALL	3.01E-04	CCF of all components in group 'E50-UV_-OC-INJ'
		P41-FAN-FR_1_4	4.44E-06	CCF of two components: P41-FAN-FR-0001A & P41-FAN-FR-0002B

Table 22.7-4
Top 200 Cutsets Contributing to Revision 3 CDF

#	Cutset Prob	Event	Event Prob	Description
		XXX-XHE-FO-DEPRESS	1.61E-01	OPERATOR FAILS TO RECOGNIZE NEED OF DEPRESSURIZATION
150	6.09E-12	%T-IORV	2.83E-02	IORV
		E50-UV_-OC-INJ_ALL	3.01E-04	CCF of all components in group 'E50-UV_-OC-INJ'
		P41-FAN-FR_2_3	4.44E-06	CCF of two components: P41-FAN-FR-0001B & P41-FAN-FR-0002A
		XXX-XHE-FO-DEPRESS	1.61E-01	OPERATOR FAILS TO RECOGNIZE NEED OF DEPRESSURIZATION
151	6.09E-12	%T-IORV	2.83E-02	IORV
		E50-UV_-OC-INJ_ALL	3.01E-04	CCF of all components in group 'E50-UV_-OC-INJ'
		P41-FAN-FR_3_4	4.44E-06	CCF of two components: P41-FAN-FR-0002A & P41-FAN-FR-0002B
		XXX-XHE-FO-DEPRESS	1.61E-01	OPERATOR FAILS TO RECOGNIZE NEED OF DEPRESSURIZATION
152	5.71E-12	%T-GEN	1.18E+00	GENERAL TRANSIENT
		BOPCWS-SYS-FAILS	1.00E-03	BALANCE OF PLANT CHILLED WATER SYSTEM FAILS
		C63-CCFSOFTWARE_S	1.00E-04	Common Cause failure of Q-DCIS Software for Spurious
		E50-UV_-OC-INJ_ALL	3.01E-04	CCF of all components in group 'E50-UV_-OC-INJ'
		XXX-XHE-FO-DEPRESS	1.61E-01	OPERATOR FAILS TO RECOGNIZE NEED OF DEPRESSURIZATION
153	5.70E-12	%T-GEN	1.18E+00	GENERAL TRANSIENT
		B21-SQV-CC_ALL	1.50E-04	CCF of all components in group 'B21-SQV-CC'

Table 22.7-4
Top 200 Cutsets Contributing to Revision 3 CDF

#	Cutset Prob	Event	Event Prob	Description
		C63-CCFSOFTWARE_S	1.00E-04	Common Cause failure of Q-DCIS Software for Spurious
		N21-ACV-CC-F0016	2.00E-03	AIR OPERATED VALVE F0016 FAILS TO OPEN
		XXX-XHE-FO-LPMAKEUP	1.61E-01	OP. FAILS TO RECOG. NEED FOR LOW PRESS. MAKEUP AFTER DEPRESSURIZATION
154	5.70E-12	%T-GEN	1.18E+00	GENERAL TRANSIENT
		B21-SQV-CC_ALL	1.50E-04	CCF of all components in group 'B21-SQV-CC'
		C63-CCFSOFTWARE_S	1.00E-04	Common Cause failure of Q-DCIS Software for Spurious
		N21-ACV-CC-F0016	2.00E-03	AIR OPERATED VALVE F0016 FAILS TO OPEN
		XXX-XHE-FO-DEPRESS	1.61E-01	OPERATOR FAILS TO RECOGNIZE NEED OF DEPRESSURIZATION
155	5.70E-12	%T-GEN	1.18E+00	GENERAL TRANSIENT
		C63-CCFSOFTWARE_S	1.00E-04	Common Cause failure of Q-DCIS Software for Spurious
		E50-SQV-CC-INJ_ALL	1.50E-04	CCF of all components in group 'E50-SQV-CC-INJ'
		N21-ACV-CC-F0016	2.00E-03	AIR OPERATED VALVE F0016 FAILS TO OPEN
		XXX-XHE-FO-DEPRESS	1.61E-01	OPERATOR FAILS TO RECOGNIZE NEED OF DEPRESSURIZATION
156	5.65E-12	%T-IORV	2.83E-02	IORV
		C12-ROD-CF-SCRAM	2.50E-07	CCF OF CONTROL RODS TO INSERT
		C41-UV_-CC-F004A	7.99E-04	CHECK VALVE F004A FAILS TO OPEN

Table 22.7-4
Top 200 Cutsets Contributing to Revision 3 CDF

#	Cutset Prob	Event	Event Prob	Description
157	5.65E-12	%T-IORV	2.83E-02	IORV
		C12-ROD-CF-SCRAM	2.50E-07	CCF OF CONTROL RODS TO INSERT
		C41-UV_-CC-F004B	7.99E-04	CHECK VALVE F004B FAILS TO OPEN
158	5.65E-12	%T-IORV	2.83E-02	IORV
		C12-ROD-CF-SCRAM	2.50E-07	CCF OF CONTROL RODS TO INSERT
		C41-UV_-CC-F005A	7.99E-04	CHECK VALVE F005A FAILS TO OPEN
159	5.65E-12	%T-IORV	2.83E-02	IORV
		C12-ROD-CF-SCRAM	2.50E-07	CCF OF CONTROL RODS TO INSERT
		C41-UV_-CC-F005B	7.99E-04	CHECK VALVE F005B FAILS TO OPEN
160	5.60E-12	%T-IORV	2.83E-02	IORV
		E50-UV_-OC-INJ_ALL	3.01E-04	CCF of all components in group 'E50-UV_-OC-INJ'
		G21-BV_-RE-F334	4.84E-02	MISPOSITION OF VALVE F334
		R10-LOSP-EPRI	3.00E-03	CONSEQUENTIAL LOSS OF PREFERRED OFFSITE POWER DUE TO A TRANSIENT
		R21-DG_-FR-CCF_1_2	4.54E-03	CCF of two components: R21-DG_-FR-DGA & R21-DG_-FR-DGB
161	5.52E-12	%T-IORV	2.83E-02	IORV
		B21-SQV-CC_ALL	1.50E-04	CCF of all components in group 'B21-SQV-CC'

Table 22.7-4
Top 200 Cutsets Contributing to Revision 3 CDF

#	Cutset Prob	Event	Event Prob	Description
		P41-SYS-FC-HVACPSW-A	1.00E-03	PSW-A ROOM COOLING FAILURE
		P41-TRN-RE-PUMP2B	8.07E-03	FAILURE TO RESTORE PSW PUMP 2B
		XXX-XHE-FO-DEPRESS	1.61E-01	OPERATOR FAILS TO RECOGNIZE NEED OF DEPRESSURIZATION
162	5.52E-12	%T-IORV	2.83E-02	IORV
		B21-SQV-CC_ALL	1.50E-04	CCF of all components in group 'B21-SQV-CC'
		P41-SYS-FC-HVACPSW-B	1.00E-03	PSW-B ROOM COOLING FAILURE
		P41-TRN-RE-PUMP2A	8.07E-03	FAILURE TO RESTORE PSW PUMP 2A
		XXX-XHE-FO-DEPRESS	1.61E-01	OPERATOR FAILS TO RECOGNIZE NEED OF DEPRESSURIZATION
163	5.52E-12	%T-IORV	2.83E-02	IORV
		E50-SQV-CC-INJ_ALL	1.50E-04	CCF of all components in group 'E50-SQV-CC-INJ'
		P41-SYS-FC-HVACPSW-A	1.00E-03	PSW-A ROOM COOLING FAILURE
		P41-TRN-RE-PUMP2B	8.07E-03	FAILURE TO RESTORE PSW PUMP 2B
		XXX-XHE-FO-DEPRESS	1.61E-01	OPERATOR FAILS TO RECOGNIZE NEED OF DEPRESSURIZATION
164	5.52E-12	%T-IORV	2.83E-02	IORV
		E50-SQV-CC-INJ_ALL	1.50E-04	CCF of all components in group 'E50-SQV-CC-INJ'
		P41-SYS-FC-HVACPSW-B	1.00E-03	PSW-B ROOM COOLING FAILURE

Table 22.7-4
Top 200 Cutsets Contributing to Revision 3 CDF

#	Cutset Prob	Event	Event Prob	Description
		P41-TRN-RE-PUMP2A	8.07E-03	FAILURE TO RESTORE PSW PUMP 2A
		XXX-XHE-FO-DEPRESS	1.61E-01	OPERATOR FAILS TO RECOGNIZE NEED OF DEPRESSURIZATION
165	5.48E-12	%T-IORV	2.83E-02	IORV
		BOPCWS-SYS-FAILS	1.00E-03	BALANCE OF PLANT CHILLED WATER SYSTEM FAILS
		C12-MOV-OO-F062	4.00E-03	MOTOR OPERATED VALVE F062 FAILS TO CLOSE
		E50-UV_-OC-INJ_ALL	3.01E-04	CCF of all components in group 'E50-UV_-OC-INJ'
		XXX-XHE-FO-DEPRESS	1.61E-01	OPERATOR FAILS TO RECOGNIZE NEED OF DEPRESSURIZATION
166	5.48E-12	%T-IORV	2.83E-02	IORV
		E50-UV_-OC-INJ_ALL	3.01E-04	CCF of all components in group 'E50-UV_-OC-INJ'
		P41-MOV-CC-PMPF004A	4.00E-03	MOTOR OPERATED VALVE MV-F004A FAILS TO OPEN
		P41-SYS-FC-HVACPSW-B	1.00E-03	PSW-B ROOM COOLING FAILURE
		XXX-XHE-FO-DEPRESS	1.61E-01	OPERATOR FAILS TO RECOGNIZE NEED OF DEPRESSURIZATION
167	5.48E-12	%T-IORV	2.83E-02	IORV
		E50-UV_-OC-INJ_ALL	3.01E-04	CCF of all components in group 'E50-UV_-OC-INJ'
		P41-MOV-CC-PMPF004B	4.00E-03	MOTOR OPERATED VALVE F004B FAILS TO OPEN
		P41-SYS-FC-HVACPSW-A	1.00E-03	PSW-A ROOM COOLING FAILURE

Table 22.7-4
Top 200 Cutsets Contributing to Revision 3 CDF

#	Cutset Prob	Event	Event Prob	Description
		XXX-XHE-FO-DEPRESS	1.61E-01	OPERATOR FAILS TO RECOGNIZE NEED OF DEPRESSURIZATION
168	5.47E-12	%T-IORV	2.83E-02	IORV
		B21-SQV-CC_ALL	1.50E-04	CCF of all components in group 'B21-SQV-CC'
		C12-MOV-OO-F062	4.00E-03	MOTOR OPERATED VALVE F062 FAILS TO CLOSE
		N21-ACV-CC-F0016	2.00E-03	AIR OPERATED VALVE F0016 FAILS TO OPEN
		XXX-XHE-FO-DEPRESS	1.61E-01	OPERATOR FAILS TO RECOGNIZE NEED OF DEPRESSURIZATION
169	5.47E-12	%T-IORV	2.83E-02	IORV
		C12-MOV-OO-F062	4.00E-03	MOTOR OPERATED VALVE F062 FAILS TO CLOSE
		E50-SQV-CC-INJ_ALL	1.50E-04	CCF of all components in group 'E50-SQV-CC-INJ'
		N21-ACV-CC-F0016	2.00E-03	AIR OPERATED VALVE F0016 FAILS TO OPEN
		XXX-XHE-FO-DEPRESS	1.61E-01	OPERATOR FAILS TO RECOGNIZE NEED OF DEPRESSURIZATION
170	5.43E-12	%T-IORV	2.83E-02	IORV
		B21-SQV-CC_ALL	1.50E-04	CCF of all components in group 'B21-SQV-CC'
		R10-LOSP-EPRI	3.00E-03	CONSEQUENTIAL LOSS OF PREFERRED OFFSITE POWER DUE TO A TRANSIENT
		R21-DG_-FR-DGA	5.76E-02	DIESEL GENERATOR "A" FAILS TO RUN GIVEN START
		R21-DG_-TM-DGB	4.60E-02	STANDBY DIESEL GENERATOR "B" IN MAINTENANCE

Table 22.7-4
Top 200 Cutsets Contributing to Revision 3 CDF

#	Cutset Prob	Event	Event Prob	Description
		XXX-XHE-FO-DEPRESS	1.61E-01	OPERATOR FAILS TO RECOGNIZE NEED OF DEPRESSURIZATION
171	5.43E-12	%T-IORV	2.83E-02	IORV
		B21-SQV-CC_ALL	1.50E-04	CCF of all components in group 'B21-SQV-CC'
		R10-LOSP-EPRI	3.00E-03	CONSEQUENTIAL LOSS OF PREFERRED OFFSITE POWER DUE TO A TRANSIENT
		R21-DG_-FR-DGB	5.76E-02	DIESEL GENERATOR "B" FAILS TO RUN GIVEN START
		R21-DG_-TM-DGA	4.60E-02	STANDBY DIESEL GENERATOR "A" IN MAINTENANCE
		XXX-XHE-FO-DEPRESS	1.61E-01	OPERATOR FAILS TO RECOGNIZE NEED OF DEPRESSURIZATION
172	5.43E-12	%T-IORV	2.83E-02	IORV
		E50-SQV-CC-INJ_ALL	1.50E-04	CCF of all components in group 'E50-SQV-CC-INJ'
		R10-LOSP-EPRI	3.00E-03	CONSEQUENTIAL LOSS OF PREFERRED OFFSITE POWER DUE TO A TRANSIENT
		R21-DG_-FR-DGA	5.76E-02	DIESEL GENERATOR "A" FAILS TO RUN GIVEN START
		R21-DG_-TM-DGB	4.60E-02	STANDBY DIESEL GENERATOR "B" IN MAINTENANCE
		XXX-XHE-FO-DEPRESS	1.61E-01	OPERATOR FAILS TO RECOGNIZE NEED OF DEPRESSURIZATION
173	5.43E-12	%T-IORV	2.83E-02	IORV
		E50-SQV-CC-INJ_ALL	1.50E-04	CCF of all components in group 'E50-SQV-CC-INJ'
		R10-LOSP-EPRI	3.00E-03	CONSEQUENTIAL LOSS OF PREFERRED OFFSITE POWER DUE TO A TRANSIENT

Table 22.7-4
Top 200 Cutsets Contributing to Revision 3 CDF

#	Cutset Prob	Event	Event Prob	Description
		R21-DG_-FR-DGB	5.76E-02	DIESEL GENERATOR "B" FAILS TO RUN GIVEN START
		R21-DG_-TM-DGA	4.60E-02	STANDBY DIESEL GENERATOR "A" IN MAINTENANCE
		XXX-XHE-FO-DEPRESS	1.61E-01	OPERATOR FAILS TO RECOGNIZE NEED OF DEPRESSURIZATION
174	5.35E-12	%SL-S	7.62E-04	SMALL STEAM LOCA (NO RWCU BREAK)
		C12-BV_-RE-F065	4.84E-02	MISPOSITION OF LOCKED OPEN VALVE F065
		E50-UV_-OC-INJ_ALL	3.01E-04	CCF of all components in group 'E50-UV_-OC-INJ'
		R10-LOSP-EPRI	3.00E-03	CONSEQUENTIAL LOSS OF PREFERRED OFFSITE POWER DUE TO A TRANSIENT
		XXX-XHE-FO-LPMAKEUP	1.61E-01	OP. FAILS TO RECOG. NEED FOR LOW PRESS. MAKEUP AFTER DEPRESSURIZATION
175	5.35E-12	%SL-S	7.62E-04	SMALL STEAM LOCA (NO RWCU BREAK)
		C12-BV_-RE-F065	4.84E-02	MISPOSITION OF LOCKED OPEN VALVE F065
		E50-UV_-OC-INJ_ALL	3.01E-04	CCF of all components in group 'E50-UV_-OC-INJ'
		R10-LOSP-EPRI	3.00E-03	CONSEQUENTIAL LOSS OF PREFERRED OFFSITE POWER DUE TO A TRANSIENT
		XXX-XHE-FO-DEPRESS	1.61E-01	OPERATOR FAILS TO RECOGNIZE NEED OF DEPRESSURIZATION
176	5.32E-12	%T-FDW	1.17E-01	LOSS OF FEEDWATER
		C63-CCFSOFTWARE	1.00E-04	Common cause failure of software
		R13-XFL-LP-CCFNSR2_ALL	4.55E-07	CCF of all components in group 'R13-XFL-LP-CCFNSR2'

Table 22.7-4
Top 200 Cutsets Contributing to Revision 3 CDF

#	Cutset Prob	Event	Event Prob	Description
177	5.19E-12	%T-GEN	1.18E+00	GENERAL TRANSIENT
		C12-ROD-CF-SCRAM	2.50E-07	CCF OF CONTROL RODS TO INSERT
		C63-CCFSOFTWARE_S	1.00E-04	Common Cause failure of Q-DCIS Software for Spurious
		N21-XHE-FO-FWRERUN	1.76E-01	OPERATOR FAILS TO RESTART FDW AFTER RUNBACK - ATWS
178	5.15E-12	%T-GEN	1.18E+00	GENERAL TRANSIENT
		C63-CCFSOFTWARE_S	1.00E-04	Common Cause failure of Q-DCIS Software for Spurious
		E50-UV_-OC-INJ_ALL	3.01E-04	CCF of all components in group 'E50-UV_-OC-INJ'
		G21-BV_-RE-F334	4.84E-02	MISPOSITION OF VALVE F334
		R10-LOSP-EPRI	3.00E-03	CONSEQUENTIAL LOSS OF PREFERRED OFFSITE POWER DUE TO A TRANSIENT
179	5.03E-12	%T-LOPP-SC	1.04E-02	SWITCHYARD CENTERED LOSS OF PREFERRED POWER
		C12-BV_-RE-F065	4.84E-02	MISPOSITION OF LOCKED OPEN VALVE F065
		C63-CCFSOFTWARE	1.00E-04	Common cause failure of software
		C72-CCFSOFTWARE	1.00E-04	COMMON CAUSE FAILURE OF DPS PROCESSORS
180	5.00E-12	%T-LOPP-PC	2.07E-03	PLANT CENTERED LOSS OF PREFERRED POWER
		B21-SQV-CC_ALL	1.50E-04	CCF of all components in group 'B21-SQV-CC'
		C63-CCFSOFTWARE_S	1.00E-04	Common Cause failure of Q-DCIS Software for Spurious

Table 22.7-4
Top 200 Cutsets Contributing to Revision 3 CDF

#	Cutset Prob	Event	Event Prob	Description
		XXX-XHE-FO-DEPRESS	1.61E-01	OPERATOR FAILS TO RECOGNIZE NEED OF DEPRESSURIZATION
181	5.00E-12	%T-LOPP-PC	2.07E-03	PLANT CENTERED LOSS OF PREFERRED POWER
		C63-CCFSOFTWARE_S	1.00E-04	Common Cause failure of Q-DCIS Software for Spurious
		E50-SQV-CC-INJ_ALL	1.50E-04	CCF of all components in group 'E50-SQV-CC-INJ'
		XXX-XHE-FO-LPMAKEUP	1.61E-01	OP. FAILS TO RECOG. NEED FOR LOW PRESS. MAKEUP AFTER DEPRESSURIZATION
182	4.98E-12	%T-IORV	2.83E-02	IORV
		C12-MOV-CC-F020A	4.00E-03	MOTOR OPER. VALVE F020A FAILS TO OPEN
		C12-ROD-CF-SCRAM	2.50E-07	CCF OF CONTROL RODS TO INSERT
		N21-XHE-FO-FWRERUN	1.76E-01	OPERATOR FAILS TO RESTART FDW AFTER RUNBACK - ATWS
183	4.98E-12	%T-IORV	2.83E-02	IORV
		C12-MOV-CC-F020B	4.00E-03	MOTOR OPER. VALVE F020B FAILS TO OPEN
		C12-ROD-CF-SCRAM	2.50E-07	CCF OF CONTROL RODS TO INSERT
		N21-XHE-FO-FWRERUN	1.76E-01	OPERATOR FAILS TO RESTART FDW AFTER RUNBACK - ATWS
184	4.98E-12	%T-IORV	2.83E-02	IORV
		C12-MOV-OO-F062	4.00E-03	MOTOR OPERATED VALVE F062 FAILS TO CLOSE
		C12-ROD-CF-SCRAM	2.50E-07	CCF OF CONTROL RODS TO INSERT

Table 22.7-4
Top 200 Cutsets Contributing to Revision 3 CDF

#	Cutset Prob	Event	Event Prob	Description
		N21-XHE-FO-FWRERUN	1.76E-01	OPERATOR FAILS TO RESTART FDW AFTER RUNBACK - ATWS
185	4.97E-12	%T-IORV	2.83E-02	IORV
		B21-SQV-CC_ALL	1.50E-04	CCF of all components in group 'B21-SQV-CC'
		C12-BV_-RE-F065	4.84E-02	MISPOSITION OF LOCKED OPEN VALVE F065
		G21-BV_-RE-F334	4.84E-02	MISPOSITION OF VALVE F334
		R16-BDC-TM-R16A3	5.00E-04	DC BUS R16-A3 IN MAINTENANCE
186	4.97E-12	%T-IORV	2.83E-02	IORV
		B21-SQV-CC_ALL	1.50E-04	CCF of all components in group 'B21-SQV-CC'
		C12-BV_-RE-F065	4.84E-02	MISPOSITION OF LOCKED OPEN VALVE F065
		G21-BV_-RE-F334	4.84E-02	MISPOSITION OF VALVE F334
		R16-BT_-TM-R16BTA3	5.00E-04	BATTERY R16-BTA3 IN TEST AND MAINTENANCE
187	4.97E-12	%T-IORV	2.83E-02	IORV
		C12-BV_-RE-F065	4.84E-02	MISPOSITION OF LOCKED OPEN VALVE F065
		E50-SQV-CC-INJ_ALL	1.50E-04	CCF of all components in group 'E50-SQV-CC-INJ'
		G21-BV_-RE-F334	4.84E-02	MISPOSITION OF VALVE F334
		R16-BDC-TM-R16A3	5.00E-04	DC BUS R16-A3 IN MAINTENANCE

Table 22.7-4
Top 200 Cutsets Contributing to Revision 3 CDF

#	Cutset Prob	Event	Event Prob	Description
188	4.97E-12	%T-IORV	2.83E-02	IORV
		C12-BV_-RE-F065	4.84E-02	MISPOSITION OF LOCKED OPEN VALVE F065
		E50-SQV-CC-INJ_ALL	1.50E-04	CCF of all components in group 'E50-SQV-CC-INJ'
		G21-BV_-RE-F334	4.84E-02	MISPOSITION OF VALVE F334
		R16-BT_-TM-R16BTA3	5.00E-04	BATTERY R16-BTA3 IN TEST AND MAINTENANCE
189	4.97E-12	%T-IORV	2.83E-02	IORV
		C12-BV_-RE-F065	4.84E-02	MISPOSITION OF LOCKED OPEN VALVE F065
		E50-UV_-OC-INJ_ALL	3.01E-04	CCF of all components in group 'E50-UV_-OC-INJ'
		P22-NSC-TM-HXS	7.50E-05	MULTIPLE TCCW HXS OUT FOR TESTING/ MAINTENANCE
		XXX-XHE-FO-DEPRESS	1.61E-01	OPERATOR FAILS TO RECOGNIZE NEED OF DEPRESSURIZATION
190	4.97E-12	%T-IORV	2.83E-02	IORV
		C12-BV_-RE-F065	4.84E-02	MISPOSITION OF LOCKED OPEN VALVE F065
		E50-UV_-OC-INJ_ALL	3.01E-04	CCF of all components in group 'E50-UV_-OC-INJ'
		P22-NSC-TM-PUMPS	7.50E-05	MULTIPLE TCCW PUMPS OUT FOR TESTING/ MAINTENANCE
		XXX-XHE-FO-DEPRESS	1.61E-01	OPERATOR FAILS TO RECOGNIZE NEED OF DEPRESSURIZATION
191	4.94E-12	%T-IORV	2.83E-02	IORV

Table 22.7-4
Top 200 Cutsets Contributing to Revision 3 CDF

#	Cutset Prob	Event	Event Prob	Description
		C12-MOV-OO-F062	4.00E-03	MOTOR OPERATED VALVE F062 FAILS TO CLOSE
		E50-UV_-OC-INJ_ALL	3.01E-04	CCF of all components in group 'E50-UV_-OC-INJ'
		G21-BV_-RE-F334	4.84E-02	MISPOSITION OF VALVE F334
		R10-LOSP-EPRI	3.00E-03	CONSEQUENTIAL LOSS OF PREFERRED OFFSITE POWER DUE TO A TRANSIENT
192	4.94E-12	%T-IORV	2.83E-02	IORV
		E50-UV_-OC-INJ_ALL	3.01E-04	CCF of all components in group 'E50-UV_-OC-INJ'
		G21-BV_-RE-F334	4.84E-02	MISPOSITION OF VALVE F334
		P41-FAN-FR_ALL	1.20E-05	CCF of all components in group 'P41-FAN-FR'
193	4.92E-12	%T-PCS	1.97E-01	TRANSIENT WITH PCS UNAVAILABLE
		C12-ROD-CF-SCRAM	2.50E-07	CCF OF CONTROL RODS TO INSERT
		C51-CCFSOFTWARE	1.00E-04	NMS COMMON CAUSE SOFTWARE FAILURE
194	4.92E-12	%T-PCS	1.97E-01	TRANSIENT WITH PCS UNAVAILABLE
		C12-ROD-CF-SCRAM	2.50E-07	CCF OF CONTROL RODS TO INSERT
		C63-CCFSOFTWARE	1.00E-04	Common cause failure of software
195	4.92E-12	%T-PCS	1.97E-01	TRANSIENT WITH PCS UNAVAILABLE
		C12-ROD-CF-SCRAM	2.50E-07	CCF OF CONTROL RODS TO INSERT

Table 22.7-4
Top 200 Cutsets Contributing to Revision 3 CDF

#	Cutset Prob	Event	Event Prob	Description
		C72-CCFSOFTWARE	1.00E-04	COMMON CAUSE FAILURE OF DPS PROCESSORS
196	4.83E-12	%ML-L	3.22E-05	MEDIUM LIQUID LOCA (NO RWCU BREAK)
		B21-SQV-CC_ALL	1.50E-04	CCF of all components in group 'B21-SQV-CC'
		BOPCWS-SYS-FAILS	1.00E-03	BALANCE OF PLANT CHILLED WATER SYSTEM FAILS
197	4.80E-12	%T-IORV	2.83E-02	IORV
		B21-SQV-CC_ALL	1.50E-04	CCF of all components in group 'B21-SQV-CC'
		C12-BV_-RE-F013A	4.84E-02	MISPOSITION OF VALVE F013A
		C12-BV_-RE-F013B	4.84E-02	MISPOSITION OF VALVE F013B
		R10-LOSP-EPRI	3.00E-03	CONSEQUENTIAL LOSS OF PREFERRED OFFSITE POWER DUE TO A TRANSIENT
		XXX-XHE-FO-DEPRESS	1.61E-01	OPERATOR FAILS TO RECOGNIZE NEED OF DEPRESSURIZATION
198	4.80E-12	%T-IORV	2.83E-02	IORV
		B21-SQV-CC_ALL	1.50E-04	CCF of all components in group 'B21-SQV-CC'
		C12-BV_-RE-F013A	4.84E-02	MISPOSITION OF VALVE F013A
		C12-BV_-RE-F015B	4.84E-02	MISPOSITION OF VALVE F015B
		R10-LOSP-EPRI	3.00E-03	CONSEQUENTIAL LOSS OF PREFERRED OFFSITE POWER DUE TO A TRANSIENT
		XXX-XHE-FO-DEPRESS	1.61E-01	OPERATOR FAILS TO RECOGNIZE NEED OF DEPRESSURIZATION

Table 22.7-4
Top 200 Cutsets Contributing to Revision 3 CDF

#	Cutset Prob	Event	Event Prob	Description
199	4.80E-12	%T-IORV	2.83E-02	IORV
		B21-SQV-CC_ALL	1.50E-04	CCF of all components in group 'B21-SQV-CC'
		C12-BV_-RE-F013B	4.84E-02	MISPOSITION OF VALVE F013B
		C12-BV_-RE-F015A	4.84E-02	MISPOSITION OF VALVE F015A
		R10-LOSP-EPRI	3.00E-03	CONSEQUENTIAL LOSS OF PREFERRED OFFSITE POWER DUE TO A TRANSIENT
		XXX-XHE-FO-DEPRESS	1.61E-01	OPERATOR FAILS TO RECOGNIZE NEED OF DEPRESSURIZATION
200	4.80E-12	%T-IORV	2.83E-02	IORV
		B21-SQV-CC_ALL	1.50E-04	CCF of all components in group 'B21-SQV-CC'
		C12-BV_-RE-F015A	4.84E-02	MISPOSITION OF VALVE F015A
		C12-BV_-RE-F015B	4.84E-02	MISPOSITION OF VALVE F015B
		R10-LOSP-EPRI	3.00E-03	CONSEQUENTIAL LOSS OF PREFERRED OFFSITE POWER DUE TO A TRANSIENT
		XXX-XHE-FO-DEPRESS	1.61E-01	OPERATOR FAILS TO RECOGNIZE NEED OF DEPRESSURIZATION

Table 22.7-5
CDF Contribution by Accident Subclasses Based on LDW Water Level

LDW Water Level	Revision 2 CDF Contribution	Revision 3 CDF Contribution	CDF Contribution Change
Low	70.09%	86.88%	**16.79%**
Medium	0.82%	0.79%	-0.03%
High	5.00%	4.93%	-0.07%

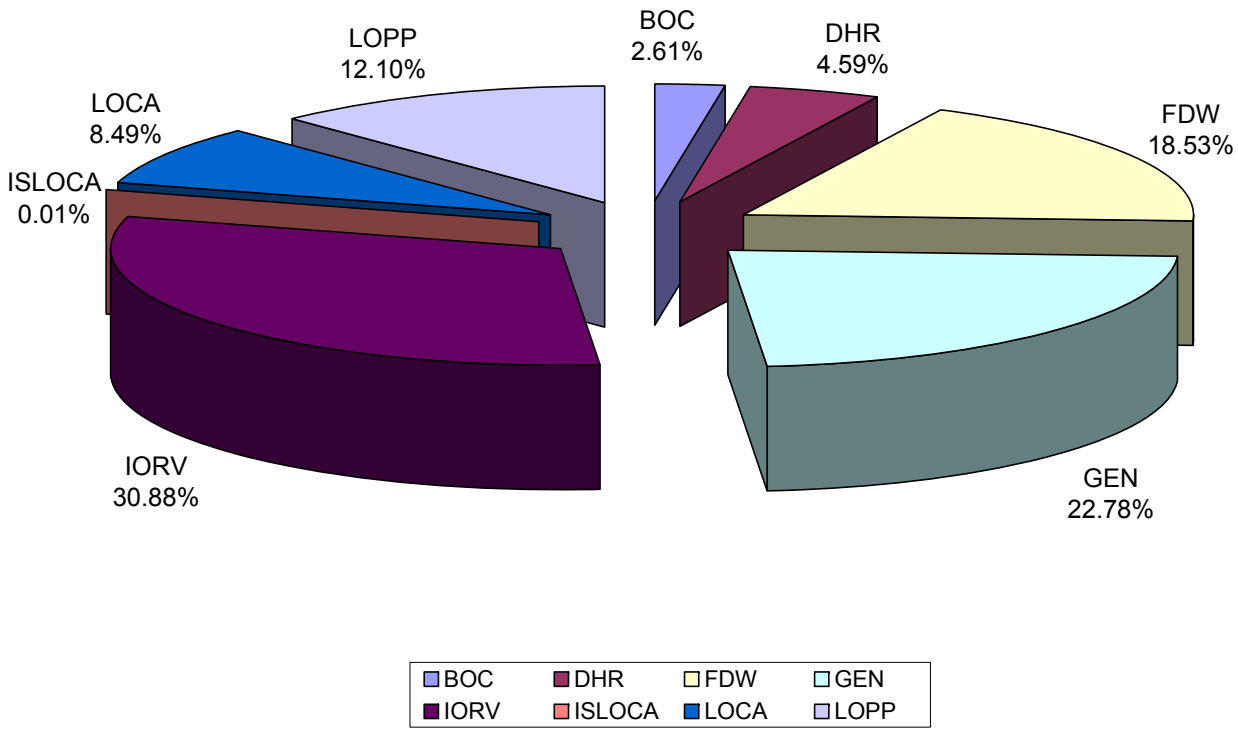

Figure 22.7-1 Contribution to CDF by Initiating Events

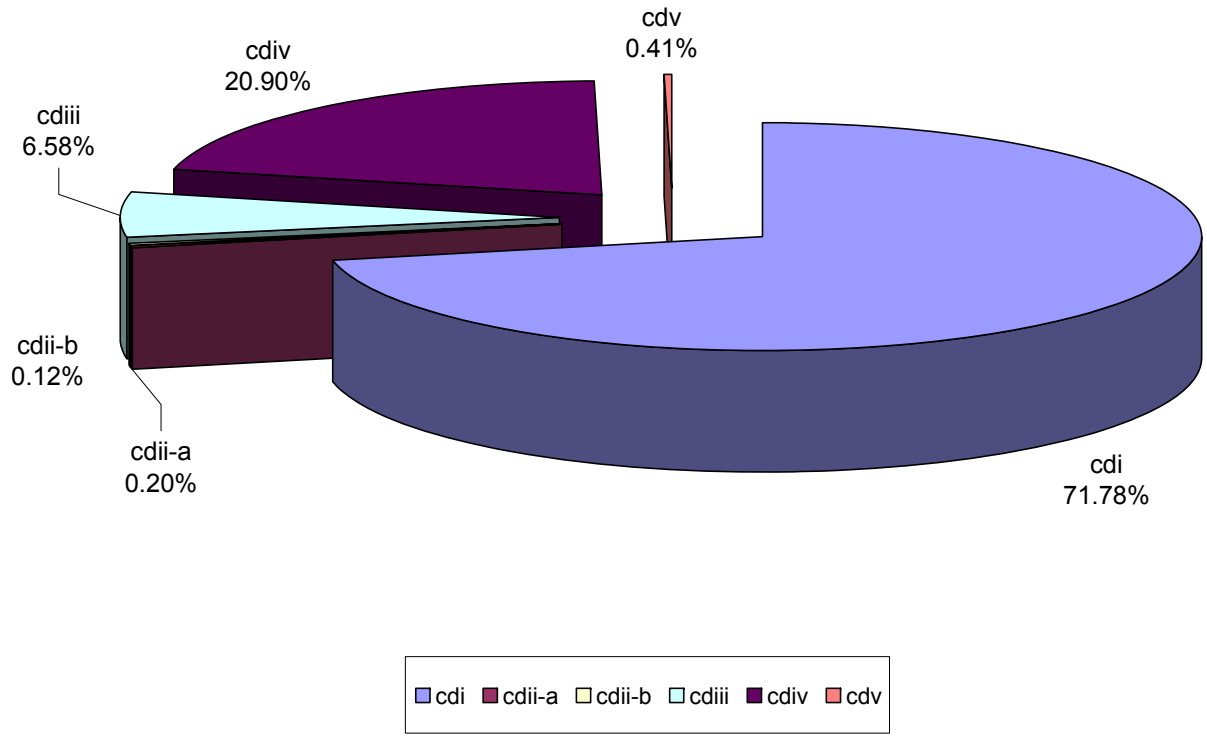

Figure 22.7-2 Contribution to CDF by Accident Classes

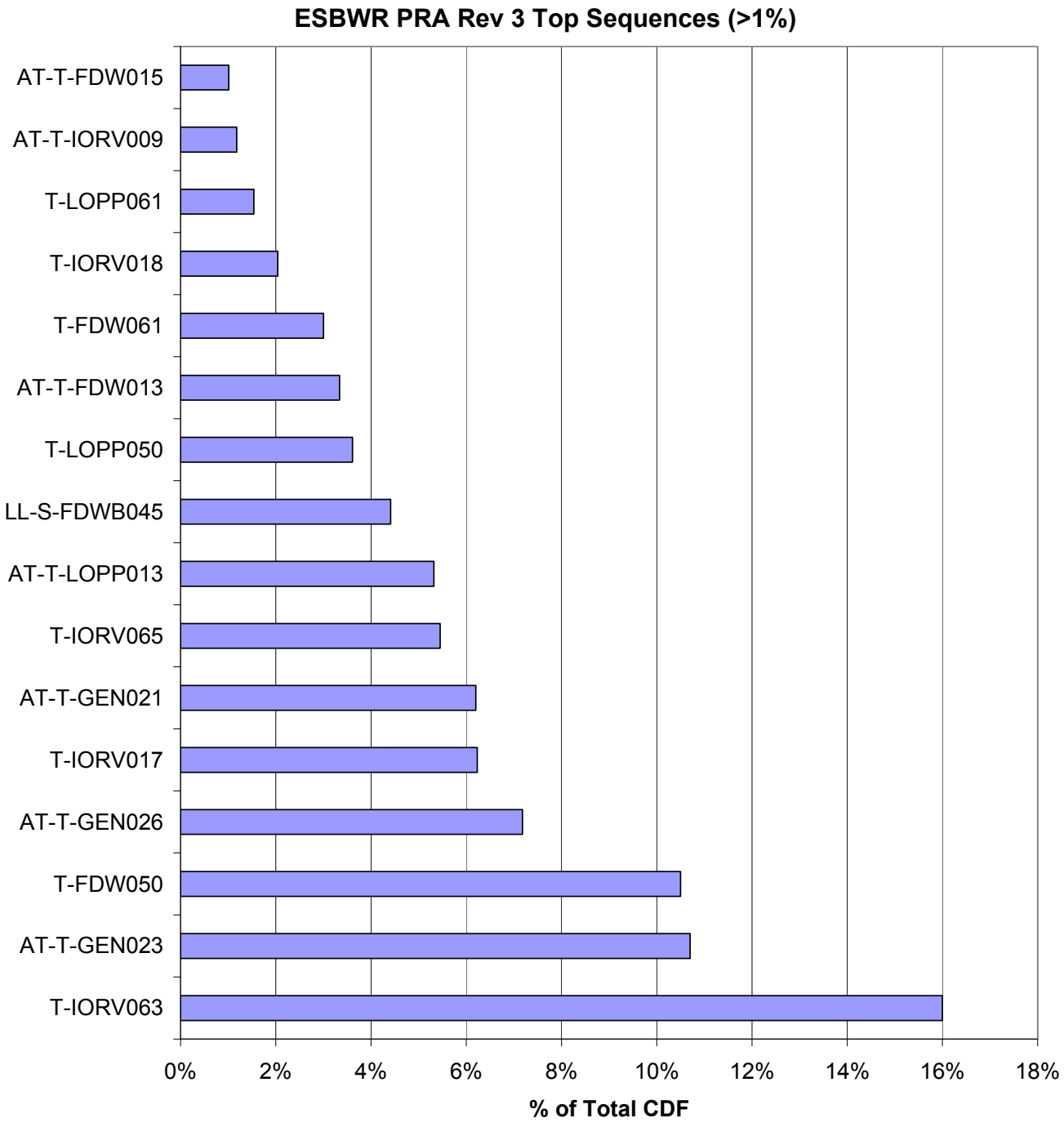

Figure 22.7-3 Contribution to CDF by Accident Sequences

22.8 CONTAINMENT ANALYSIS

The Revision 3 Level 2 PRA model incorporates all changes documented in Sections 22.2, 22.3, 22.4, 22.5, 22.6, and 22.7. The methodology described in Revision 3 of Section 8 and associated appendices is still applicable to the analysis. The purpose of this section is to show the updated Level 2 results and to illustrate any significant changes and their effect, if any, on the overall PRA insights and conclusions.

22.8.1 Significant Design and Modeling Changes

There have been design changes and development for DCD Revision 5 that have important impact in the Level 2 PRA model. These changes have been explained in detail throughout the system documentation in earlier subsections of Section 22; these notable changes are summarized in Table 22.8-1.

22.8.1.1 Potential for Future Exclusion / Reduction of the CCIW Release Category

As a result of the BiMAC testing (NEDE-33392P, "The MAC Experiments: Fine Tuning of the BiMAC Design"), the design and performance uncertainties associated with the BiMAC system have been significantly reduced. The ESBWR Level 2 PRA currently assumes a failure probability of 1E-2 for the BiMAC structure to bound phenomenological and design uncertainties as described in Section 8.2.1.3.6. The BiMAC testing showed that pipe dryout and subsequent loss of corium cooling in the lower drywell (LDW) could not be produced with any potentially reasonable scenario of heat loading; a BiMAC failure as postulated in the PRA could not be created. This development has the potential to positively affect Level 2 PRA results in the future because the BiMAC is currently assigned a relatively high failure probability.

A sensitivity to study the effect of removing release category CCIW is shown in Section 22.11.

22.8.2 Results Impact

The baseline, internal events Level 2 model was quantified with all accident sequence and system changes incorporated. The new release category results are compared to the Revision 2 results in Table 22.8-2; total nTSL and CCFP changes are shown in Table 22.8-3.

Release categories with significant changes (greater than a 1% change in contribution to nTSL release frequency) are explained in Sections 22.8.2.1 through 22.8.2.6.

Initiating event contribution changes are discussed in Section 22.8.2.7. Initiating event contributions for Revision 2 and Revision 3 are shown in Figure 22.8-1 and Figure 22.8-2, respectively.

22.8.2.1 Filtered Release (FR) Change

Containment venting, which must be successful to have an FR release, became much more reliable in Revision 3 of the PRA. In Revision 2 containment venting was failed by common cause failures in Q-DCIS software as well as the instrument air system. The Revision 3 PRA only models local manual actuation with air bottles as discussed in Section 22.4.18. Since containment venting is much more reliable, many releases that previously went to OPW1 and OPW2 are now successfully vented and become FR release scenarios.

22.8.2.2 Loss of Containment Heat Removal – Long-Term (OPW2) Change

The OPW2 release category increased because the design of the ICS/PCCS pool cross-connect valves became more specific for DCD Revision 5. The specific changes are discussed in 22.4.2; the overall effect is slightly less reliability because squib valve operators, which have been specified for one of the two valves per side, have a higher failure rate than the nitrogen-motor operated valves modeled previously. Further increase in OPW2 release frequency is likely mitigated by the increase in containment venting discussed in Section 22.8.2.1.

22.8.2.3 Loss of Containment Heat Removal – Short-Term (OPW1) Change

The decrease in OPW1 release frequency is due to the more reliable containment venting system. Many OPW1 release scenarios feature containment venting failure, so some OPW1 frequency has been shifted to the FR release category.

22.8.2.4 Containment Overpressure Failure – Vacuum Breakers (OPVB) Change

There are two contributors to the decrease in OPVB release frequency:

(1) The increase in containment venting allows some cutsets that were previously OPVB releases to instead be successfully vented; these cutsets contribute to the increase in FR frequency.

(2) Change in Level 1 accident sequence binning – some sequences that were binned as class II-a / OPVB were changed to class V (see Section 22.3). This change shifted some OPVB release frequency to the BOC release category.

22.8.2.5 Ex-Vessel Explosion (EVE) Change

The absolute release frequency of EVE decreased slightly from 6.10E-10/yr in Revision 2 to 6.04E-10/yr in Revision 3. However, since the total nTSL release frequency was reduced by about 6.5%, the relative contribution of EVE has increased slightly. The design changes and modeling changes that reduced nTSL release frequency did not affect the large LOCA sequences that result in high lower drywell (LDW) water levels. The high LDW water level is an initial condition in the Level 2 PRA and is assumed to cause containment failure upon RPV failure.

22.8.2.6 Break Outside Containment (BOC) Change

The BOC release frequency has been reduced because the reliability of RWCU/SDC isolation has been improved (see Section 22.4.18). Since the %BOC-RWCU was the most significant contributor to the BOC release category in Revision 2, the increase in reliability of that isolation function has had a noticeable effect on the results.

22.8.2.7 Initiating Event Contribution Changes

The primary contributor to non-TSL release, large LOCA in feedwater line B (%LL-S-FDWB), did not change significantly from Revision 2 to Revision 3. However, the number two and three contributors have changed.

In Revision 2 the second highest contributor was medium LOCA (%ML-L), which has been reduced because of the improved reliability in steam suppression (see Section 22.4.18); a

medium LOCA plus failure of steam suppression leads to a class V core damage state. The third highest contributor was break outside containment in RWCU/SDC (%BOC-RWCU), which has been reduced because of increased reliability in RWCU/SDC isolation (see Section 22.4.18).

The main difference in Revision 3 initiating event distribution (besides the reductions listed above) is the increased contribution from loss of preferred power. Grid-related loss of preferred power (%T-LOPP-GR) has increased from 1% to 5% of non-TSL release; switchyard centered (%T-LOPP-SC) and weather-related (%T-LOPP-WR) loss of preferred power have appeared as minor contributors. The increased LOPP contribution is expected because of the explicitly modeled ancillary diesel generator (ADG) support to the nonsafety-related uninterruptible power supply during station blackout (SBO) (see Section 22.4.14, 22.4.15, and 22.4.17). Revision 2 assumed that the nonsafety-related UPS, which supports N-DCIS and DPS, would have power for 72 hours during SBO despite the fact that the nonsafety-related batteries last for only two hours.

22.8.3 Conclusion

The Revision 3 Level 2 PRA model has been updated to reflect design changes and incorporate modeling changes to support DCD Revision 5. The baseline, internal events Level 2 PRA results have not changed significantly as a result of the Revision 3 modeling changes. Overall, the direction of change was from larger source term categories to release categories with smaller source terms. For example, the largest increase was in FR, which has one of the smallest source terms of all non-TSL releases and is not considered a containment failure (controlled operator venting).

The PRA insights and conclusions documented in DCD Chapter 19, Revision 2, have not been affected by the Revision 3 design and modeling changes and remain valid. No additional PRA insights or assumptions have been identified.

Table 22.8-1
Notable Changes for Level 2 PRA

System	Further Documentation	Summary of Changes
Accident Analysis	22.3	A number of Level 1 accident sequences were re-binned based on more detailed consideration of RPV pressure at the time of vessel rupture. In addition, some Class II-a sequences that featured failure of steam suppression were re-binned as Class V; this changes their release category from OP to BOC.
ICS	22.4.2	The ICS/PCCS cross-connect valves, which provide safety-related make-up to the inner expansion pools, have been specifically designed. PRA change involves different failure rates because some valve operators have changed.
DPS	22.4.5	Automatic reactor scram and automatic MSIV isolation is credited in Revision 3
UPS	22.4.15	Revision 2 assumed that the nonsafety-related UPS would supply power beyond two hours during an SBO. Revision 3 explicitly models the new ancillary diesel generators as the SBO power source for the NSR UPS.
Containment	22.4.18	1) Containment venting no longer depends on Q-DCIS and IAS 2) Isolation of MSIVs by DPS is now modeled 3) The nonsafety-related valves credited for RWCU/SDC BOC isolation now receive N-DCIS signal 4) The vacuum breaker isolation valve design has been specified and increases reliability of the steam suppression function of containment

Table 22.8-2

Release Category Results

Release Category	Revision 2 Results			Revision 3 Results			nTSL Contribution Change
	Freq	% Total	% nTSL	Freq	% Total	% nTSL	
TSL	1.12E-8	92.12%	-	1.12E-8	92.56%	-	-
FR	2.34E-13	0.00%	0.02%	7.51E-11	0.62%	8.35%	**8.33%**
OPW2	7.78E-14	0.00%	0.01%	9.33E-12	0.08%	1.04%	**1.03%**
OPW1	3.21E-11	0.26%	3.33%	1.37E-11	0.11%	1.52%	***-1.82%***
OPVB	1.57E-11	0.13%	1.63%	1.40E-12	0.01%	0.16%	***-1.47%***
BYP	5.63E-11	0.46%	5.86%	4.54E-11	0.38%	5.05%	*-0.81%*
CCIW	9.92E-11	0.81%	10.31%	9.94E-11	0.82%	11.05%	0.74%
CCID	9.02E-13	0.01%	0.09%	9.76E-13	0.01%	0.11%	0.02%
EVE	6.10E-10	5.00%	63.42%	6.04E-10	5.00%	67.20%	***3.78%***
BOC	1.47E-10	1.21%	15.32%	4.97E-11	0.41%	5.53%	***-9.80%***

Table 22.8-3

Change in Total nTSL Release Frequency and CCFP

Metric	Revision 2	Revision 3	Change
Total nTSL	9.62E-10/yr	8.99E-10/yr	*-6.54%*
CCFP	0.079	0.074	*-0.005*

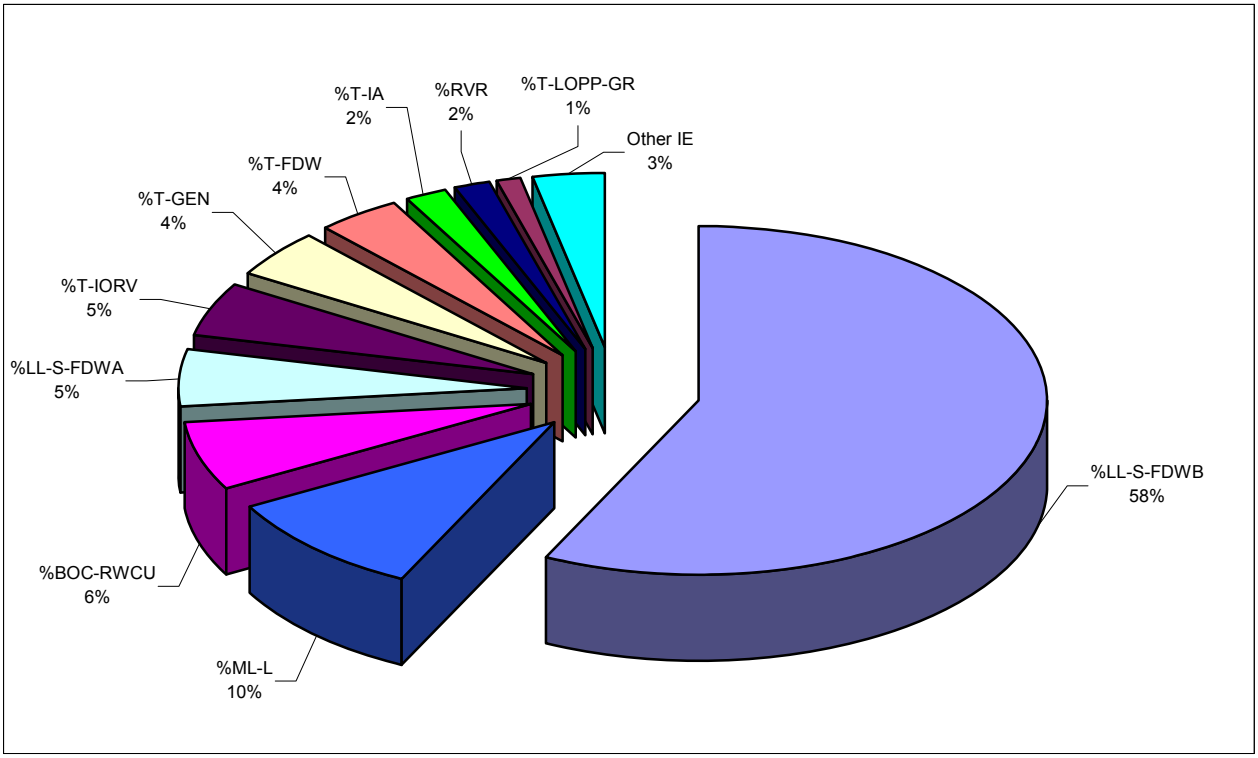

Figure 22.8-1. Revision 2 Initiating Event Contributions

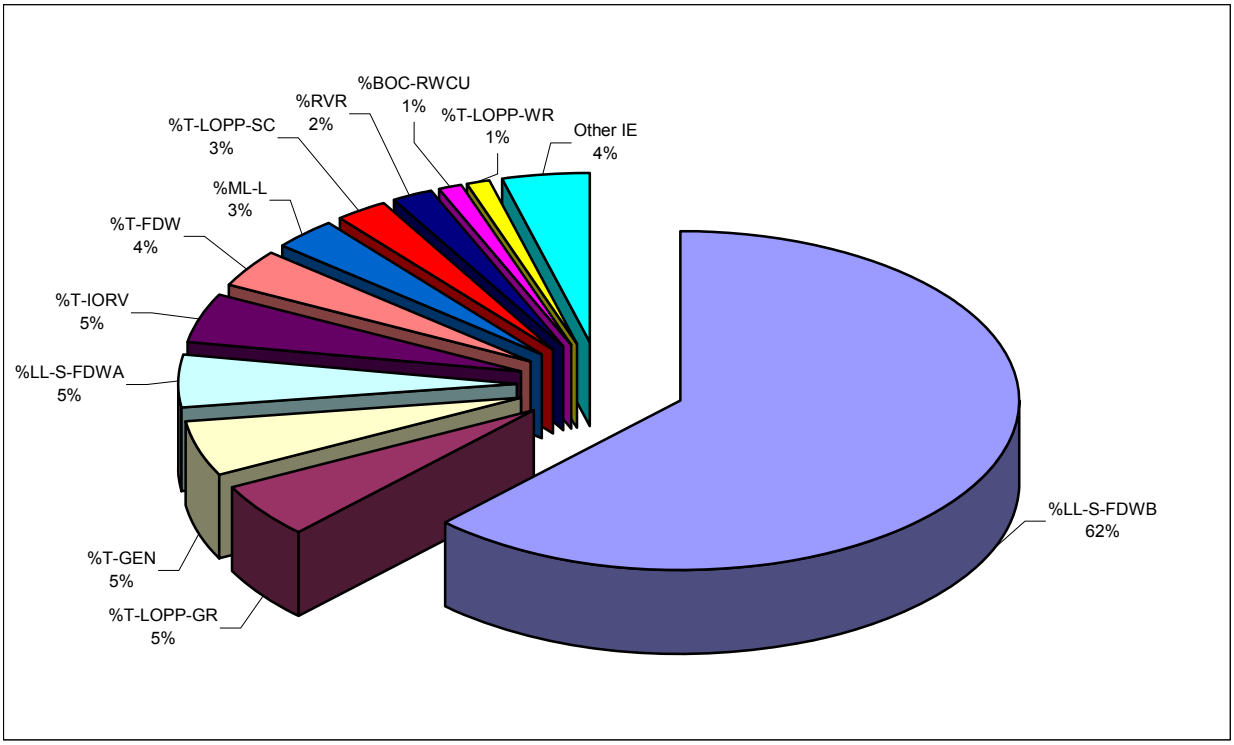

Figure 22.8-2. Revision 3 Initiating Event Contributions

22.9 SOURCE TERMS

The source terms section takes outputs from containment analysis and, via thermal-hydraulic analysis, provides radionuclide release category source terms to be used as an input to the consequence analysis. Fifteen source terms in ten release categories were selected in the Revision 2 PRA; each source term is reviewed for impact by comparing the Revision 3 and Revision 2 containment analysis results (Section 22.8).

22.9.1 Overview

As a result of the Revision 3 containment analysis, two relevant items were changed from the Revision 2 source term analysis:

(1) The frequency of each of the release categories has changed (see Table 22.8-2)

(2) The sequence class redistribution within some of the release categories has shifted; most of the shift is from high-pressure RPV failure (CDIII) to low-pressure RPV failure (CDI) (see Table 22.7-3)

In Section 22.9.1.1, the sequence class distribution of each release category is evaluated.

In Section 22.9.1.2, changes in the core inventory based on design input are addressed.

In Section 22.9.1.3, a long-term source term sensitivity evaluation with timing being well beyond 72 hours of release will be conducted. Higher radionuclide source terms, due to some of the continuously increased release of some of the release categories, will be applied.

22.9.1.1 Release Sequence Class Redistribution Evaluation

As a result of changes in Rev 3 of the Level 2 PRA analysis, certain sequence class distributions were changed. As shown in Table 22.9-1, Release Category Sequence Class Review, the representative sequences used in Section 9 are still reasonable and adequate to be used as source terms to the offsite consequence analysis.

22.9.1.2 Core Inventory Evaluation

The following aspects of the core inventory, which is an input for the source term quantification, have been modified for this section:

(1) Core inventory – Based on the latest design information available, minor changes were made to the core inventory data; these changes are taking into account in the Section 22.10 offsite consequences sensitivity.

(2) Core thermal power level – To be consistent with the methodology used to derive the core inventory data, a 2% uncertainty of the core thermal power level is included, which results in a core thermal power level of 4590 MWt; this is an increase over the value of 4500MWt used in the revision 2 analysis and is taken into account in Section 22.10.

22.9.1.3 Long-Term Source Term Sensitivity Evaluation

The intent of this sensitivity study is to evaluate the increase in radiological dose consequences beyond 72 hours for selected release categories from Section 9.

The following release categories show an increasing source term at 72 hours and were chosen for this sensitivity:

(1) Containment Bypass (BYP) – low pressure representative sequence

(2) Dry Core Concrete Interaction (CCID)

(3) Wet Core Concrete Interaction (CCIW) – low and high pressure representative sequences

(4) Vacuum Breaker Containment Overpressure (OPVB) – low and high pressure representative sequences

(5) Early Loss of CHR Containment Overpressure (OPW1)

(6) Late Loss of CHR Containment Overpressure (OPW2)

Once the long-term source terms were quantified for these release categories, the offsite consequences were calculated and compared to the baseline Revision 2 results to complete the sensitivity in Section 22.10.

Table 22.9-2 shows the radionuclide source terms produced in this sensitivity study.

Figures 22.9-1 through 22.9-8 show the cesium iodine (CsI) release fractions over time.

22.9.2 Conclusions

The release sequence class redistribution evaluation shows that the current representative sequences presented in the Revision 2 source terms section (Section 9) remain valid.

The core inventory evaluation was used as part of the long-term source term sensitivity, which will be used in Section 22.10 to show that offsite consequences are not significantly impacted by minor changes in core inventory.

The long-term source term sensitivity shows updated source terms that account for extended analysis durations with conservative, bounding assumptions. It will be shown in Section 22.10 that even with these increased release fractions, the offsite consequences are not significantly impacted.

None of the PRA results and insights presented in DCD Chapter 19 is affected by the design and modeling changes in the source term analysis since Revision 2 of the PRA.

Table 22.9-1

Release Category Sequence Class Review

Rev 2 Result			Rev 3 Result
Source Term	Representative Release Category	MAAP CASE	Sequence Review
1	BOC	BOCsd_nIN_R1	Release categories BOCsd_nIN_R1 and BOCdr_nIN_R1 of Rev 2, are still reasonable representative cases for BOC category.
2		BOCdr_nIN_R1	
3	BYP	T_nIN_BYP_R1	In Rev 2, the highest class I sequence contribution to the BYP category was 3.5% in terms of frequency. In Rev 3, the highest class I sequence contribution to this release category is now 0.3%. It is judged that Rev 2 release category, T_nIN_BYP_R1, is still a reasonable representation.
4		T_nDP_nIN_BYP_R1	In Rev 2, class IV had higher percentage than class III, 30.7% vs. 6.3%, frequency contribution in the BYP category. Class III category was selected as the representative case. In Rev 3, class III and class IV have about the same percentage, 10.6% vs. 14.9%. It is judged that Rev 2 release category, T_nDP_nIN_BYP_R1, is still a reasonable representation.
5	CCID	T_nIN_nD_CCID_R1	In Rev 2, the highest class I sequence contribution to this release category was 50.9%. In Rev 3, the highest class I frequency contribution to this release category is now 55.8%. Rev 2 release category, T_nIN_nD_CCID_R1, is still a reasonable representation.
6		T_nDP_nIN_nD_CCID_R1	In Rev 2, class IV had higher percentage than class III in this release category, 28.67% vs. 20.14%. Class III was selected for MAAP run in Rev 2. In Rev 3, class IV now is substantially higher than class III, 35.9% vs. 8.6%, i.e., class IV now contributes more than in Rev 2 PRA. However, given the low frequency of this category, 9.76E-13/yr, It is judged that T_nDP_nIN_nD_CCID_R1 is still a reasonable representation case with different frequency.
7	CCIW	T_nIN_CCIW_R1	In Rev 2, the highest class I frequency contribution to this release category was 43.6%. In Rev 3, the highest class I frequency contribution to this release category is 69.4%. Considering the results from Table 22.9-1 above, Rev 2 MAAP case, T_nIN_CCIW_R1, is still a reasonable representation.
8		T_nDP_nIN_CCIW_R1	In Rev 2, class III had higher percentage in this release category than class IV, 37.4% over 18.5%. In Rev 3, class IV has higher percentage than class III, 23.8% over 6.8%. It is judged that T_nDP_nIN_CCIW_R1 is still a reasonable representation case.
9	EVE	T_nIN_nD_EVE_R1	In Rev 2, the highest class I frequency contribution to this release category was 96.3%. In Rev 3, the highest class I frequency contribution to this release category is 98.1%. Rev 2 release category, T_nIN_nD_EVE_R1, is still a reasonable representation.
10	FR	T-AT_nIN_nCHR_FR_R1	In Rev 2, 100% of this category was class II-b. In Rev 3, class I is dominating with 79.6%. Class II-b is now 20%. Considering potential early timing of release, Class IV release category, T-AT_nIN_nCHR_FR_R1, is still a reasonable representation.
11	OPVB	T_nDP_nIN_VB_R1	In Rev 2, class II-a was dominant at 62.4% and class I was 37.5%. In Rev 3, 100% of OPVB is from class II-a. It is judged that sequences T_nDP_nIN_VB_R1 and T_nIN_VB_R1 are still reasonable representations, with low to high pressure sequence range.

Table 22.9-1

Release Category Sequence Class Review

Rev 2 Result			Rev 3 Result
Source Term	Representative Release Category	MAAP CASE	Sequence Review
12		T_nIN_VB_R1	
13	OPW1	T_nDP_nIN_nCHR_W1_R1	100% of OPW1 is from class II-a in both Rev 2 and Rev 3. Sequence T_nDP_nIN_nCHR_W1_R1 is still a reasonable representation.
14	OPW2	T_nDP_nIN_nCHR_W2_R1	In Rev 3, over 97% of OPW2 is from class II-a. In Rev 2, 100% was from class II-a. Sequence T_nDP_nIN_nCHR_W2_R1 is still a reasonable representation.
15	TSL	T_AT_nIN_TSL2x_R1	Sequence T_AT_nIN_TSL2x_R1 was selected in Rev 2 as representative because the core damage time is expected to be relatively early for ATWS sequences. Also in Rev 2, the area of containment leakage corresponding to the maximum allowable Technical Specification leakage rate was doubled to produce the representative source term used for this release category. This is even more conservative in Rev 3, since in Rev 5 of the DCD, the maximum containment leakage rate was reduced from 0.5% to 0.4% per day. As such, this sequence is still considered as adequate representative sequence.

Table 22.9-2

Sensitivity Study – Source Terms

Case	#	Xe/Kr	CsI	TeO2	SrO	MoO2	CsOH	BaO	La2O3	CeO2	Sb	Te2	UO2	Time (Hr)
T_nIN_BYP_R1a[1]	3	9.71E-01	5.37E-01	1.68E-01	4.49E-03	7.14E-02	3.22E-01	1.43E-02	1.82E-04	8.54E-04	3.11E-01	8.25E-05	5.20E-06	138.89
T_nIN_nD_CCID_R1a	5	9.04E-01	1.69E-01	1.52E-01	2.18E-07	3.12E-07	2.45E-01	4.71E-06	1.59E-08	1.71E-08	2.77E-01	8.32E-07	9.94E-08	138.89
T_nIN_CCIW_R1a	7	9.96E-01	9.09E-03	7.51E-05	7.08E-08	2.20E-07	1.27E-02	1.06E-06	9.96E-09	1.39E-08	3.88E-01	9.75E-07	1.45E-08	277.78
T_nDP_nIN_CCIW_R1a	8	9.96E-01	3.06E-01	4.04E-02	2.71E-06	2.23E-06	9.73E-02	4.02E-06	2.60E-06	2.62E-06	1.15E-01	5.28E-07	1.55E-08	277.78
T_nIN_VB_R1a	12	9.97E-01	2.66E-01	7.90E-03	1.00E-06	3.04E-07	1.19E-01	4.92E-07	1.01E-07	6.90E-07	3.85E-01	1.13E-05	6.49E-09	277.78
T_nDP_nIN_VB_R1a	11	9.97E-01	6.64E-01	4.86E-02	5.58E-04	1.93E-06	1.17E-01	2.93E-04	4.57E-06	1.08E-04	4.07E-01	5.32E-03	8.72E-07	277.78
T_nDP_nIN_nCHR_W1_R1a	13	1.00E+00	6.42E-01	1.90E-01	9.07E-04	2.49E-07	2.00E-01	4.15E-04	3.20E-06	1.27E-04	1.34E-01	1.72E-07	6.22E-07	224.56
T_nDP_nIN_nCHR_W2_R1a	14	9.92E-01	7.03E-01	1.29E-01	9.65E-04	2.54E-07	1.72E-01	4.82E-04	3.14E-06	1.30E-04	2.71E-01	8.13E-08	6.32E-07	277.78

[1] The suffix “a” is to differentiate these “long-term” source term MAAP cases from the baseline cases in Section 9

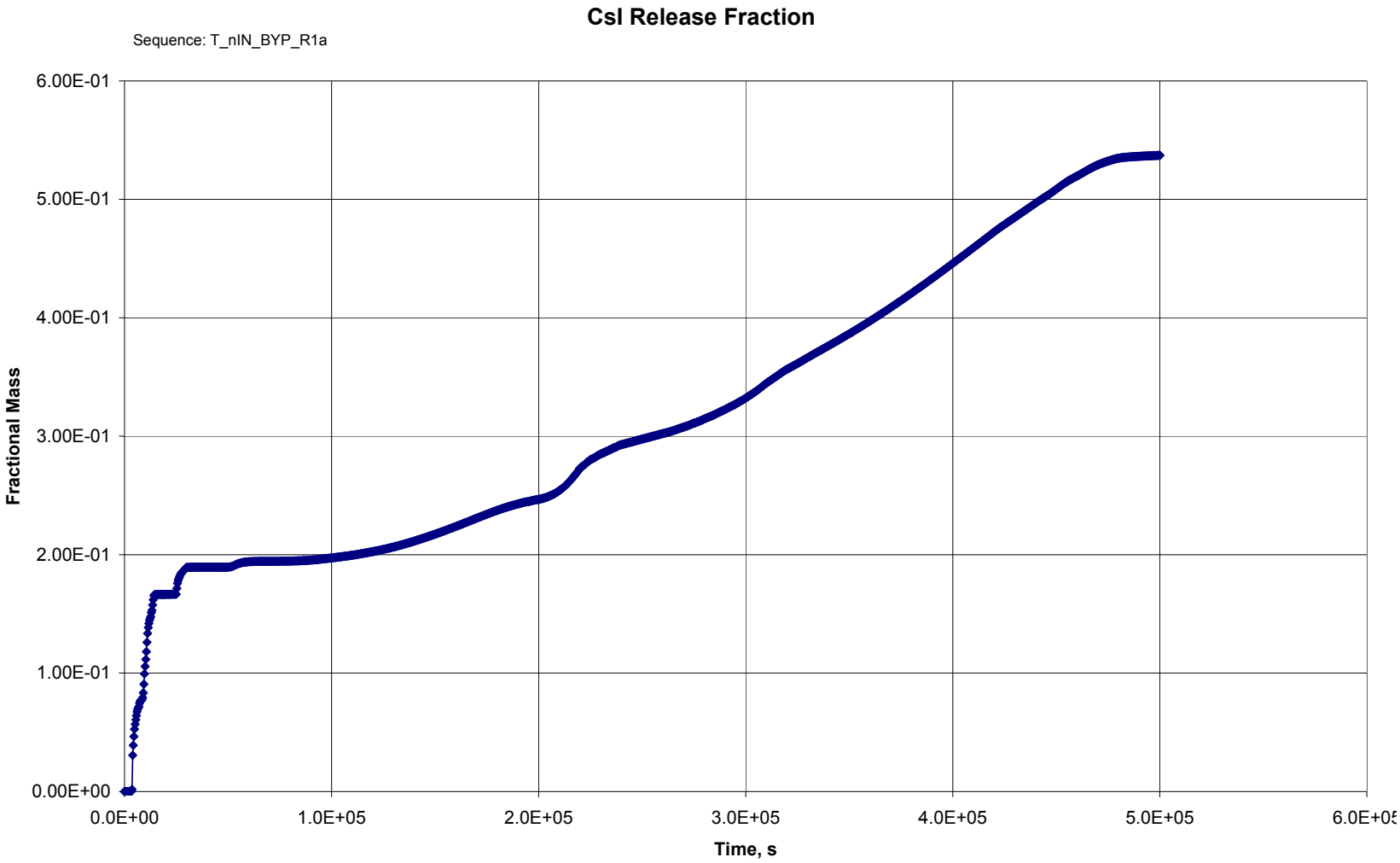

Figure 22.9-1. Containment Bypass (Low Pressure) – T_nIN_BYP_R1a

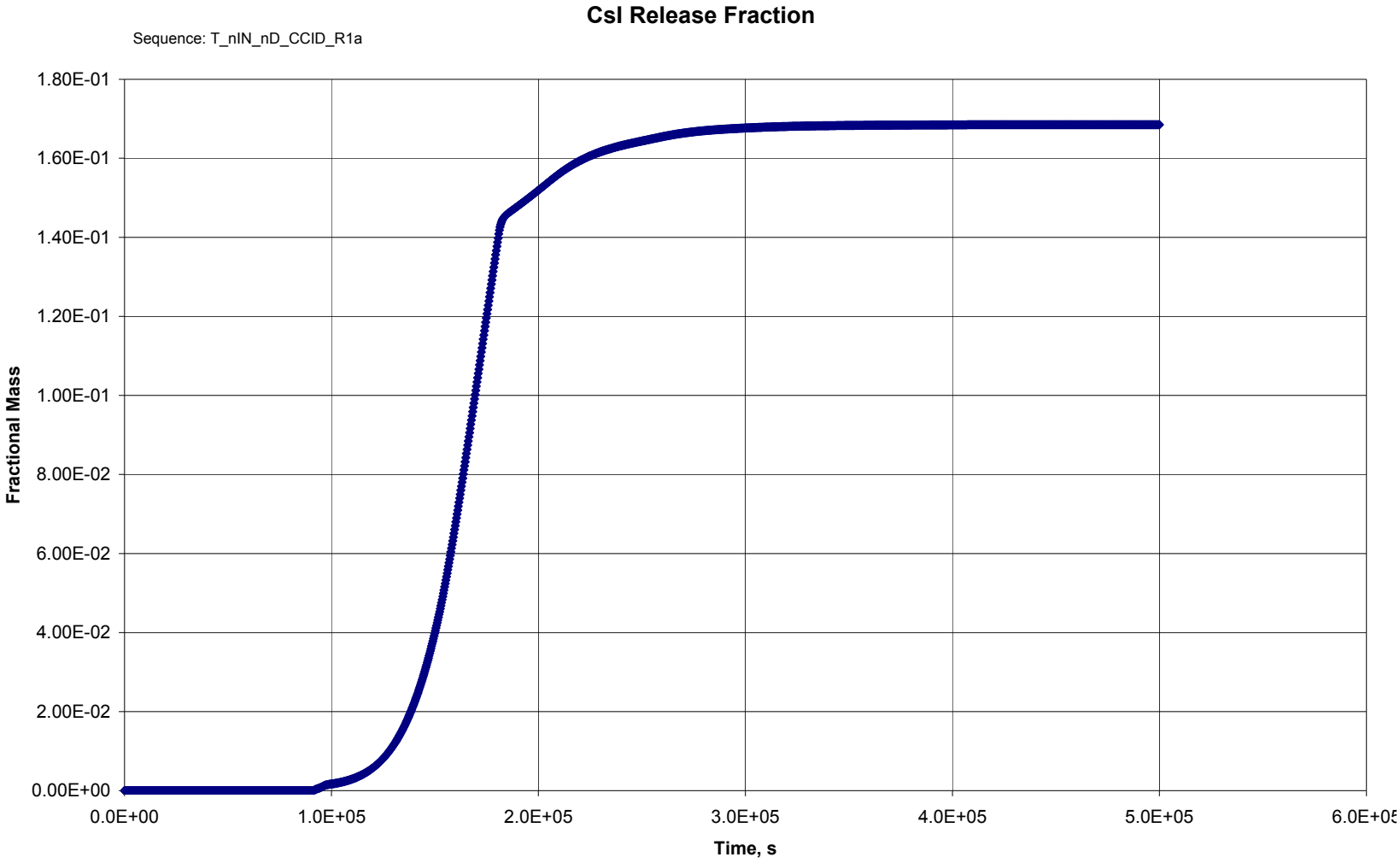

Figure 22.9-2. Dry Core-Concrete Interaction – T_nIN_nD_CCID_R1a

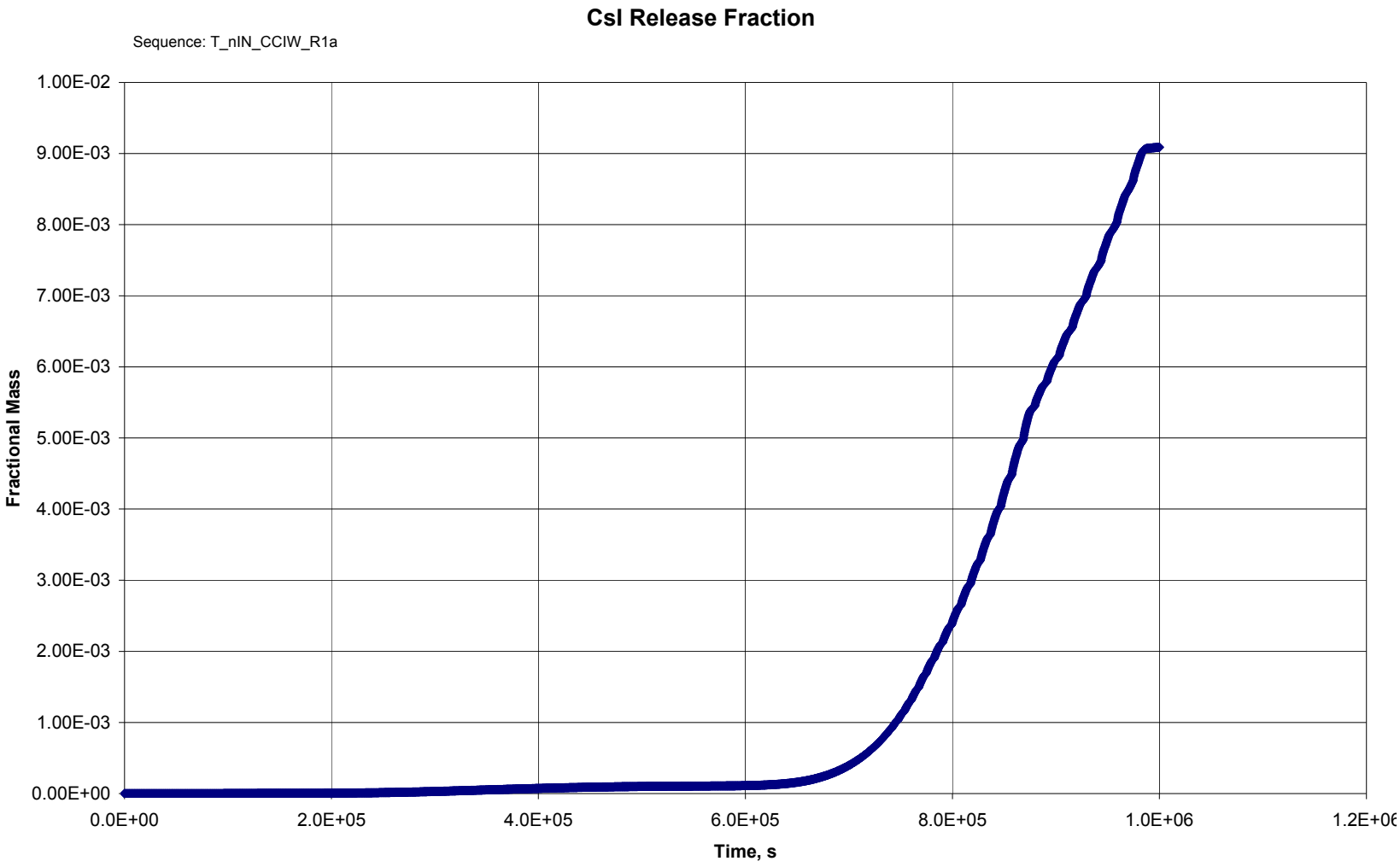

Figure 22.9-3. Wet Core-Concrete Interaction (Low Pressure) – T_nIN_CCIW_R1a

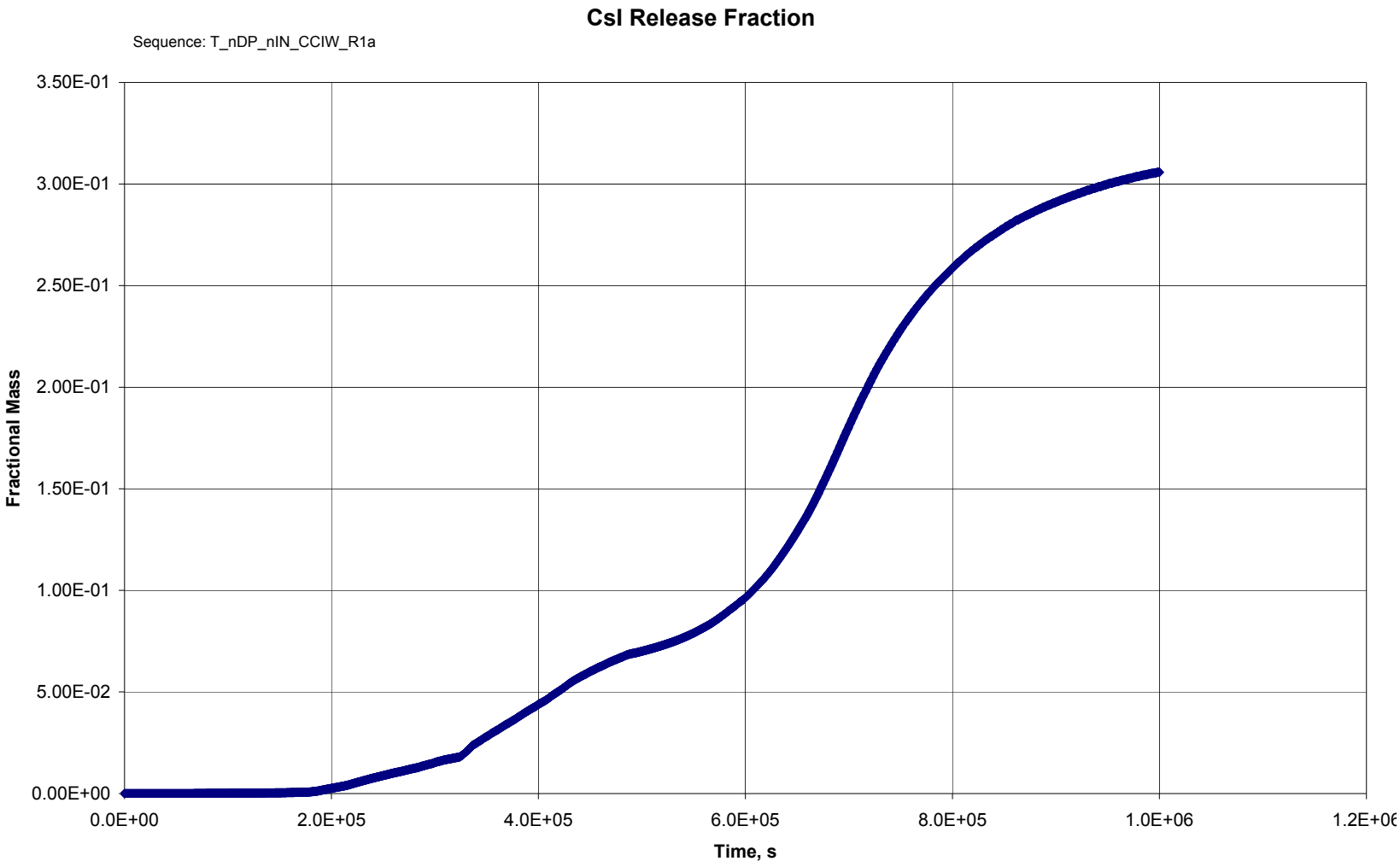

Figure 22.9-4. Wet Core-Concrete Interaction (High Pressure) – T_nDP_nIN_CCIW_R1a

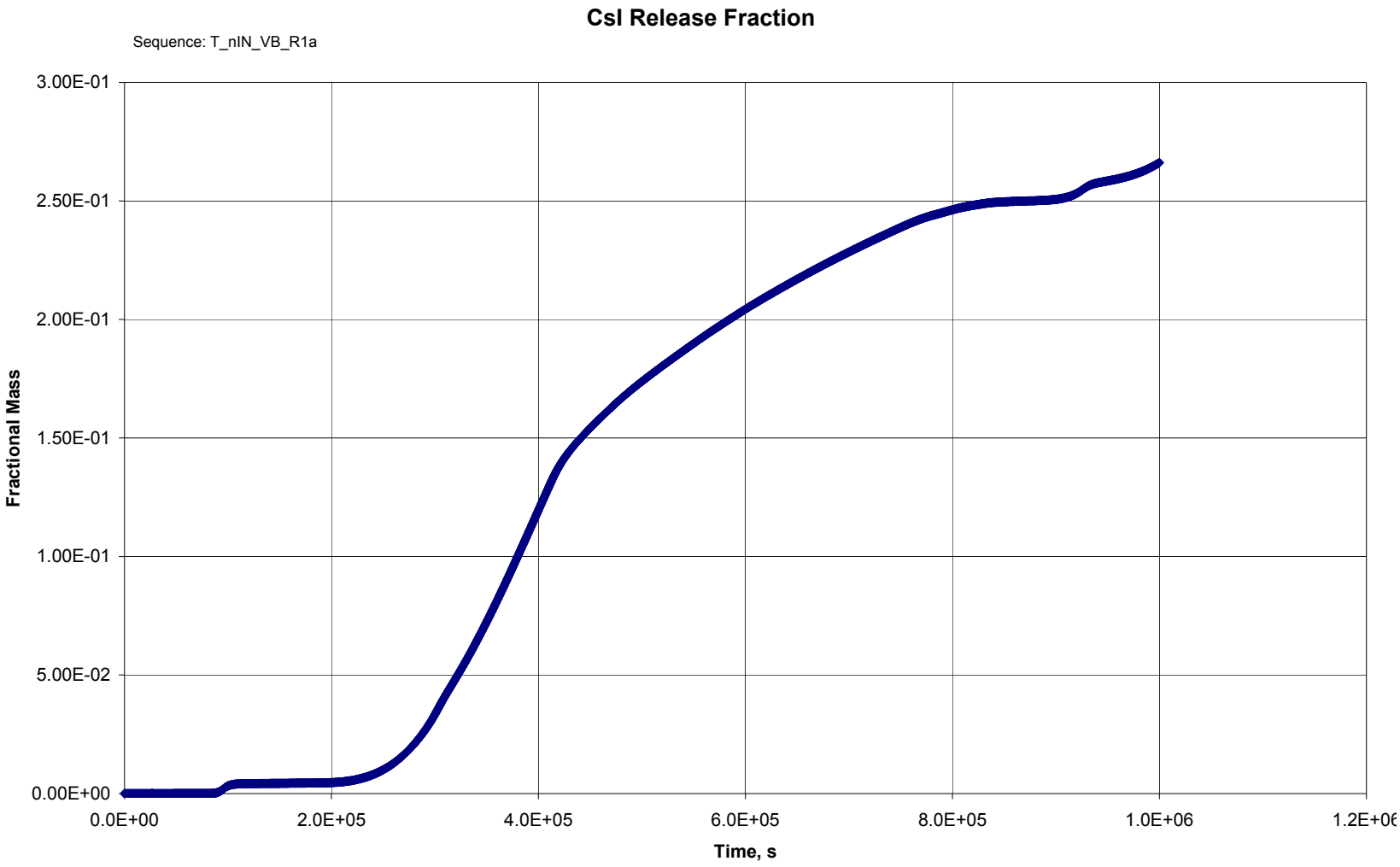

Figure 22.9-5. Vacuum Breaker Containment Overpressure (Low Pressure) – T_nIN_VB_R1a

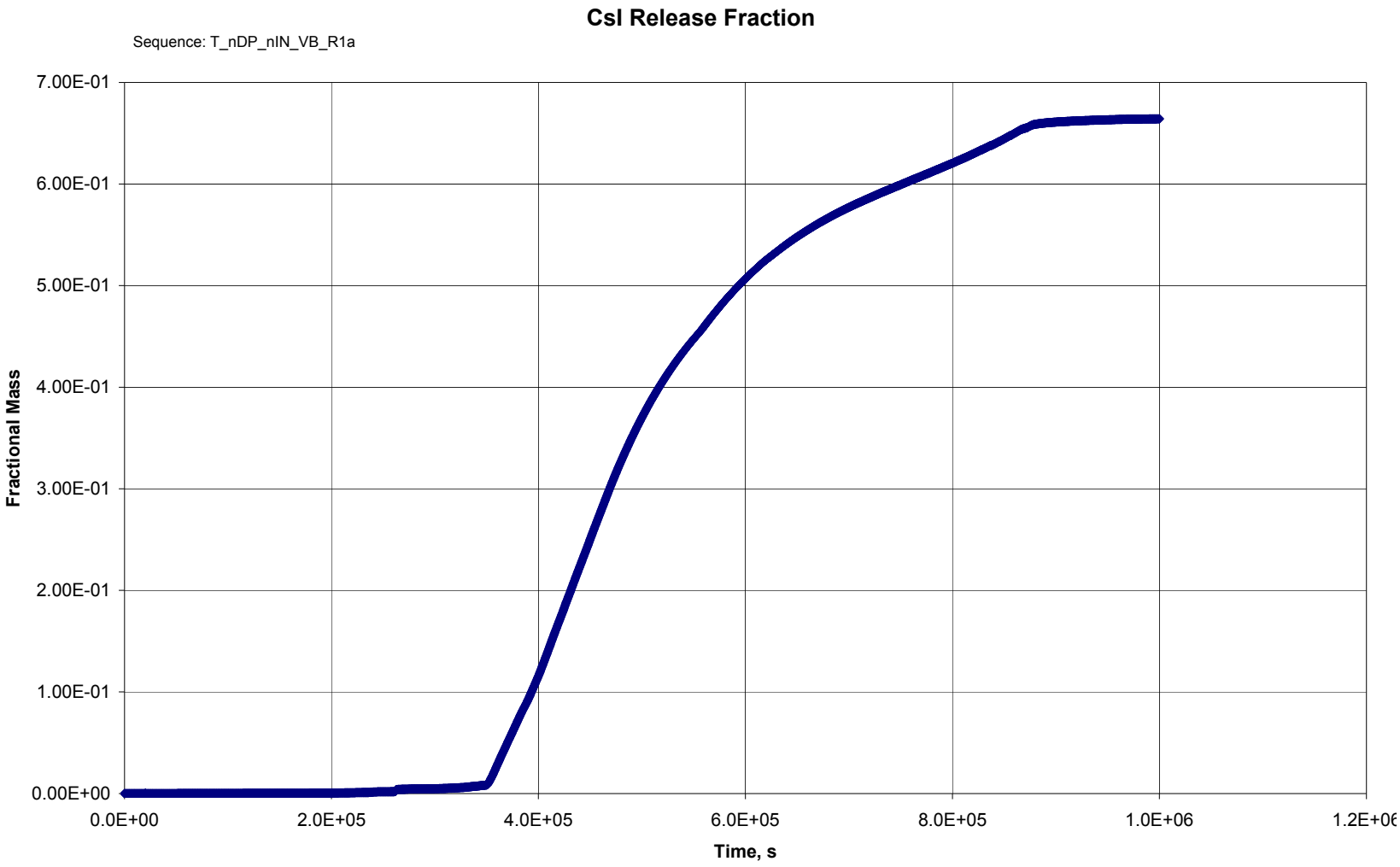

Figure 22.9-6. Vacuum Breaker Containment Overpressure (High Pressure) – T_nDP_nIN_VB_R1a

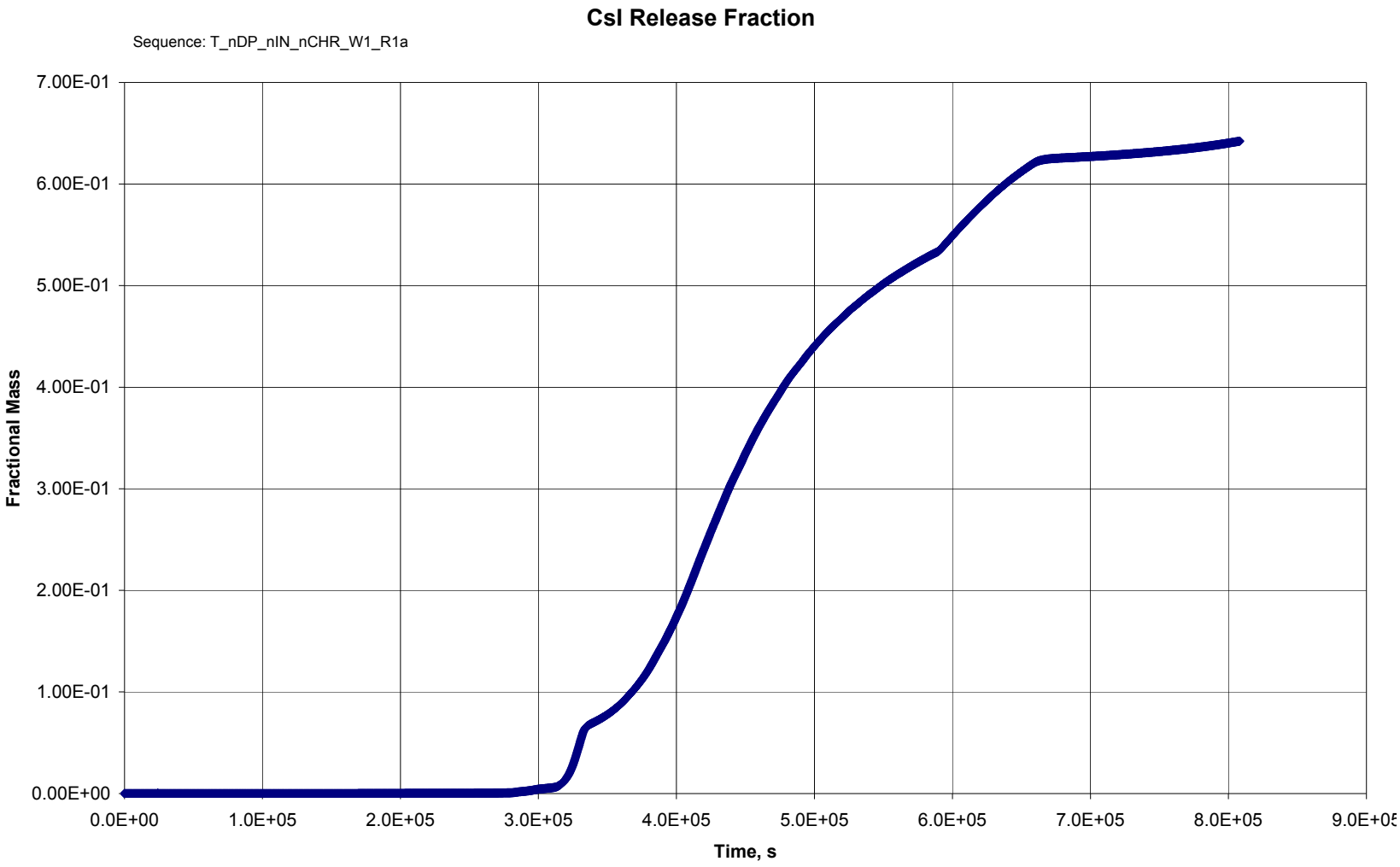

Figure 22.9-7. Early Loss of CHR Containment Overpressure – T_nDP_nIN_nCHR_W1_R1a

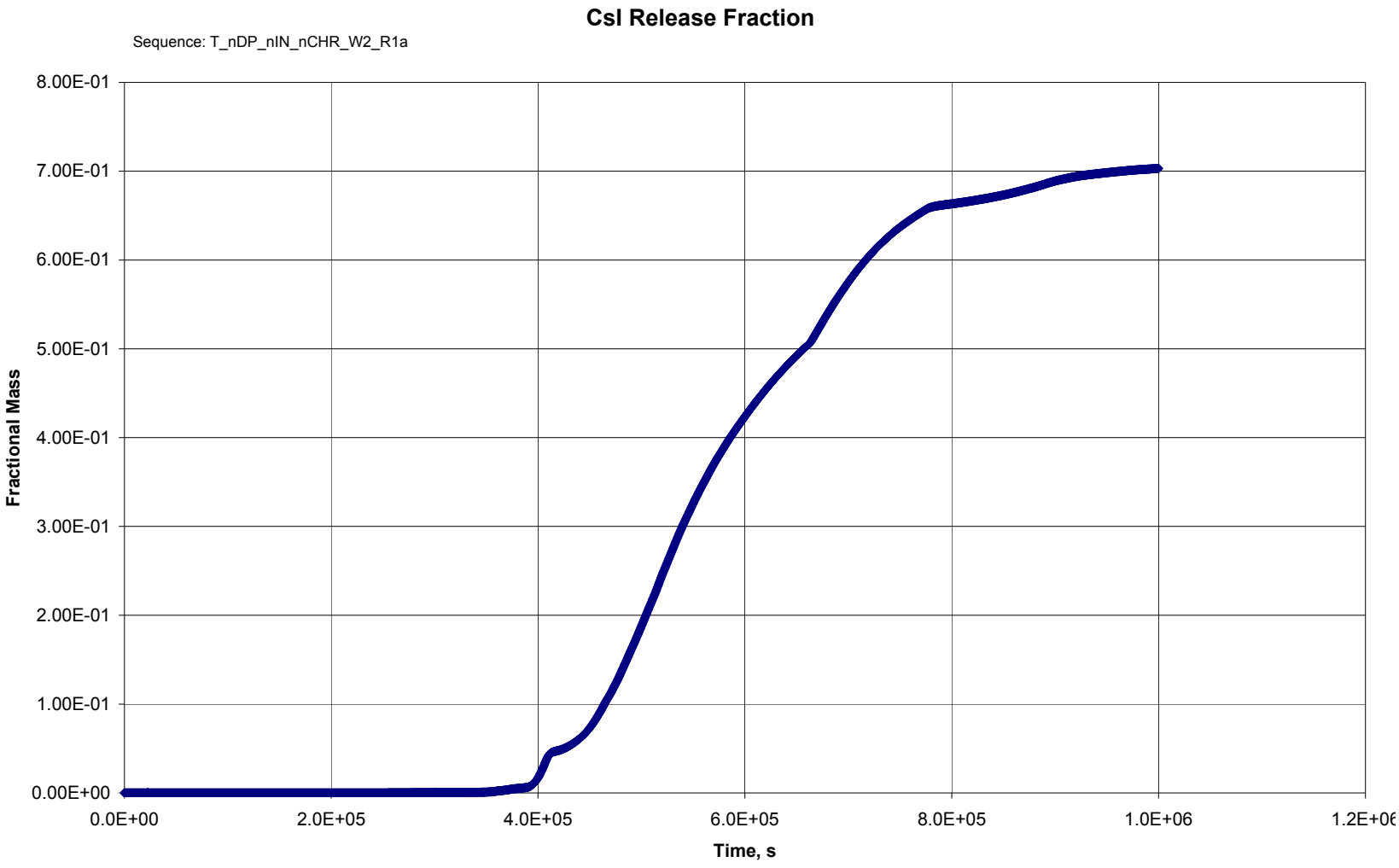

Figure 22.9-8. Late Loss of CHR Containment Overpressure – T_nDP_nIN_nCHR_W2_R1a

22.10 OFFSITE CONSEQUENCES

The offsite consequences section takes outputs from the Containment Analysis (Section 22.8) and the Source Term (Section 22.9) calculation. A sensitivity has been done to study the effect of the long-term source terms produced in Section 22.9. The baseline offsite consequences have also been re-quantified to show the effect of the new release frequencies. Overall, it will be shown that the design and modeling changes made since Revision 2 of the PRA do not significantly affect the offsite consequences analysis.

22.10.1 Overview

In Section 22.10.1.1, the long-term source term sensitivity evaluation will confirm that the Consequence Analysis conclusion in Section 10 of NEDO-33201 is bounding and valid even with this very conservative source term. In addition, it is assumed that no equipment recovery or evacuation takes place, even though the scenario evolves over a long (>100 hours) time period.

In Section 22.10.1.2, new offsite consequence results, based on the Section 22.8 release frequencies, will be compared to results of Rev 2 Consequence Analysis will be used as a measure of the impact of the release category frequency changes.

22.10.1.1 Long-Term Offsite Consequences Sensitivity

The intent of this sensitivity study is to evaluate the radiological dose consequences beyond 72 hours. The long-term source terms calculated in Section 22.9 were used as inputs for this sensitivity; the updated core inventory parameters were used as well. All other inputs were the same as those used in the Revision 2 offsite consequence analysis, the results of which are reproduced in Table 22.10-2 (Case 1).

(1) Radiological Consequence Results – Table 22.10-1 shows the consequence results based on the long-term source term sensitivity for elevated release with plume and buoyant effect.

(2) Impact Conclusion – As seen in Table 22.10-2 (Case 4), the three risk measures are within the same order of magnitude as the results in Section 10. All results are well within the NRC risk goals.

22.10.1.2 Baseline Offsite Consequence Sensitivity

Offsite consequences were calculated using the new release frequencies from Section 22.8. The following cases, shown in Table 22.10-2, were calculated to examine the effect of design and modeling changes to the baseline offsite consequence results:

(1) Case 2 – 100% sequence fractions were used for every representative sequence. This technique effectively doubles the release frequency for release categories with two representative sequences and produces bounding offsite consequence results

(2) Case 3 – Sequence fractions based on actual release category frequencies in Section 22.8 were used. Otherwise, the same as Case 2.

As expected, the Case 2 consequences are more severe than Case 3; Case 3, which uses the actual representative sequence contribution fractions, shows consequences that are very similar to the Revision 2 results (Case 1).

22.10.2 Conclusions

This section studied the potential affect of the design and modeling changes on the offsite consequences analysis. A sensitivity study was also conducted to show the consequence results with the long-term radiological source term input parameters.

The results show that the calculated offsite consequence risk is negligibly affected by the design and modeling changes implemented since Revision 2 of the PRA. Additionally, the long-term source term sensitivity shows that the increase in offsite consequences is minor even with the bounding radiological inputs.

Overall, the analysis presented in Section 10 is still an appropriate representation of offsite consequence risk for ESBWR; the PRA insights and assumptions documented in DCD Chapter 19 are not affected by the changes since Revision 2 of the PRA.

Table 22.10-1

Long-Term Source Term Sensitivity Study – Consequence Results (Elevated Release With Plume and Buoyant Effect)

Source Term	Release Category	MAAP CASE	Release Frequency (/yr)	Individual Risk (0-1 mile)	Weighted Individual Risk	Weighted Individual Risk Contribution	Societal Risk (0-10 miles)	Weighted Societal Risk	Weighted Societal Risk Contribution	Prob. of Dose > .2 Sv (0-0.5 mile)	Weighted Prob of Exceedance	Weighted Dose Contribution	Sequence Fraction
1	BOC	BOCsd_nIN_R1	4.97E-11	1.15E-01	2.86E-12	3.20%	1.49E-02	3.70E-13	2.63%	1.00E+00	2.49E-11	2.28%	50.0%
2		BOCdr_nIN_R1		8.42E-02	2.09E-12	2.34%	1.25E-02	3.11E-13	2.20%	1.00E+00	2.49E-11	2.28%	50.0%
3	BYP	T_nIN_BYP_R1	4.54E-11	1.11E-01	1.51E-14	0.02%	1.72E-02	2.34E-15	0.02%	1.00E+00	1.36E-13	0.01%	3.1%
4		T_nDP_nIN_BYP_R1		1.07E-01	4.84E-12	5.42%	5.11E-02	2.31E-12	16.42%	1.00E+00	4.53E-11	4.15%	96.9%
5	CCID	T_nIN_nD_CCID_R1	9.76E-13	1.04E-01	5.66E-14	0.06%	1.24E-02	6.75E-15	0.05%	1.00E+00	5.45E-13	0.05%	85.7%
6		T_nDP_nIN_nD_CCID_R1		7.37E-02	3.18E-14	0.04%	9.52E-03	4.11E-15	0.03%	1.00E+00	4.31E-13	0.04%	14.3%
7	CCIW	T_nIN_CCIW_R1	9.94E-11	1.04E-01	7.13E-12	7.98%	1.11E-02	7.61E-13	5.40%	1.00E+00	6.86E-11	6.29%	90.5%
8		T_nDP_nIN_CCIW_R1		9.37E-02	2.89E-12	3.23%	1.07E-02	3.30E-13	2.34%	1.00E+00	3.08E-11	2.83%	9.5%
9	DCH	T_nDP_nIN_nD_DCH_R1	1.00E-15	1.06E-01	1.06E-16	0.00%	1.30E-02	1.30E-17	0.00%	1.00E+00	1.00E-15	0.00%	100%
10	EVE	T_nIN_nD_EVE_R1	6.04E-10	1.06E-01	6.40E-11	71.58%	1.35E-02	8.15E-12	57.87%	1.00E+00	6.04E-10	55.39%	100%
11	FR	T-AT_nIN_nCHR_FR_R1	6.02E-11	7.77E-02	2.92E-12	3.26%	7.18E-03	2.70E-13	1.91%	9.95E-01	3.74E-11	3.43%	50.0%
12		T-AT_nIN_nCHR_FR50_R1		8.45E-02	4.23E-17	0.00%	8.05E-03	4.03E-18	0.00%	1.00E+00	5.00E-16	0.00%	50.0%
13	OPVB	T_nDP_nIN_VB_R1	1.00E-15	1.07E-01	7.49E-15	0.01%	1.69E-02	1.18E-15	0.01%	1.00E+00	7.00E-14	0.01%	5.0%
14		T_nIN_VB_R1		9.11E-02	1.21E-13	0.14%	8.94E-03	1.19E-14	0.08%	1.00E+00	1.33E-12	0.12%	95.0%
15	OPW1	T_nDP_nIN_nCHR_W1_R1	1.00E-15	1.09E-01	1.49E-12	1.67%	1.73E-02	2.37E-13	1.68%	1.00E+00	1.37E-11	1.26%	100%
16	OPW2	T_nDP_nIN_nCHR_W2_R1	2.42E-13	1.04E-01	9.60E-13	1.07%	1.37E-02	1.26E-13	0.90%	1.00E+00	9.23E-12	0.85%	100%
17	TSL	T_AT_nIN_TSL2x_R1	1.12E-08	0.00E+00	0.00E+00	0.00%	1.06E-04	1.19E-12	8.46%	2.04E-02	2.29E-10	21.03%	100%
Total	--	--	1.21E-08	--	8.94E-11	100.00%	--	1.41E-11	100.00%	--	1.09E-09	100.00%	--

Table 22.10-2
Updated Risk Measures

Cases	Description	Weighted Individual Risk	Weighted Societal Risk	Weighted Probability of Exceedance	Comment
1	Baseline Section 10 Results – Table 10.5-1 (Elevated Release With Plume and Buoyant Effect, 72 hours)	8.7E-11	1.6E-11	1.10E-09	Baseline case for comparison
2	Revision 3 release frequencies, 100% (bounding) release fractions, ground release, 24 hours	7.20E-11	8.88E-12	2.01E-09	Some release category frequencies decreased, some increased. However, setting release fraction to 100% for all representative sequences increases results.
3	Revision 3 release frequencies, baseline Revision 3 release fractions, ground release, 24 hours	6.29E-11	7.59E-12	1.91E-09	Without the bounding release frequencies, offsite consequence decreases as expected.
4	Sensitivity Results (Elevated Release With Plume and Buoyant Effect, Greater than 128 hours)	8.94E-11	1.41E-11	1.09E-09	Results closely match baseline Revision 2 (Case 1); this shows that results are mostly dependent on release frequency, which did not change significantly from Revision 2 to Revision 3. The increase in source term for this case did not results in significantly higher consequences.
	Comparison with NRC Risk Goals	< 3.9E-7	< 1.7E-6	< 10E-6	All cases are well within risk goals.

22.11 UNCERTAINTY AND SENSITIVITY ANALYSIS

This subsection evaluates the impact of the DCD Revision 5 design changes and PRA Revision 3 modeling changes on the Uncertainty and Sensitivity Analysis.

22.11.1 Overview

The Revision 3 baseline Level 1 (L1) and Level 2 (L2) PRA models have been updated to reflect design changes and incorporate modeling changes in support DCD Revision 5. As demonstrated in Subsections 22.7 and 22.8, the Revision 3 baseline PRA results have not changed significantly from the previous revision. The PRA insights and conclusions documented in DCD Chapter 19, Revision 5, have not been affected by the Revision 3 design and modeling changes.

As part of the documentation of the Revision 3 PRA model, the system importance analysis and focus sensitivities were performed. In addition, a sensitivity was conducted to evaluate the impact of the wet core-concrete interaction (CCIW) failure mode.

22.11.2 System Importance

The system importance sensitivity was conducted to evaluate the impact of individual systems on Revision 3 of the L1 PRA model and core damage frequency (CDF). Using the Revision 3 PRA model described in 22.7 and the methodology defined in 11.3.1.15, these system importance analyses were conducted. The system flag files were updated to reflect the system design and modeling changes implemented in the revision 3 PRA model. The individual system analyses were run using the Revision 3 L1 model at a truncation of 1E-14 with the additional flag files. Results for the system importance sensitivity are shown in Table 22.11-1.

In evaluating the CDF results obtained from the individual systems importance with the L1 PRA model, values for RAW and F-V were calculated and are provided in Table 22.11-1. The criteria described in Section 11.2 were applied to the RAW and F-V results to determine system importance rankings. Based on the RAW values, 26 of the 39 systems/functions evaluated were found to be risk significant based on exceeding a RAW value of 5. In some cases, a truncation level of 1E-13 or less was used in determining RAW values for some systems when cutsets generated exceeded the limitations of the quantification tools. Based on the F-V values, 9 of the 39 systems/ functions evaluated were found to be risk significant based on exceeding a F-V value of 0.01. The ranking of system importance based on RAW values is contained in Table 22.11-2 and rankings based on F-V values are contained in Table 22.11-3.

22.11.3 Focus and RTNSS Sensitivity – Level 1 and Level 2

A focus evaluation and a series of sensitivities were conducted on Revision 3 of the L1 and L2 PRA model. The intent of these focus sensitivities was to develop a better understanding of safety-related systems and systems included in the regulatory treatment of non-safety systems (RTNSS) program. The focused studies also provide insights related to the CDF and large release frequency (LRF) for the L1 and L2 PRA model.

Using the Revision 3 of the PRA models described in 22.7 and 22.8, and the methodology defined in 11.3.3.1 and 11.3.4.1, these L1 and L2 focus and RTNSS sensitivities were conducted. The focus and RTNSS flag files were updated to reflect the system design and modeling changes

implemented in the Revision 3 PRA model. The sensitivity analyses were run using the Revision 3 PRA L1 and L2 model at a truncation of 1E-14 with the additional flag files. Results for the focus and RTNSS sensitivities are shown in Table 22.11-4.

The L1 focus generated a CDF of 2.62E-04/yr and the RTNSS generated a CDF of 4.57E-06/yr. The results for the L1 focus sensitivity showed significant impact to CDF with the failure of non-safety systems both with and without RTNSS. The inclusion of the RTNSS systems in the model reduces CDF by approximately two orders of magnitude compared to crediting safety-related systems only. Based on the L1 focus sensitivities CDF results, the NRC goal of 1E-04/yr CDF is met for the L1 RTNSS sensitivity, but is exceeded for the L1 focus sensitivity.

The L2 focus generated a non-Technical Specification Leakage (nTSL) release frequency of 2.49E-04/yr and a RTNSS nTSL release frequency of 1.24E-07/yr. The results for the focus sensitivity showed significant impact to nTSL release with the failure of non-safety systems both with and without RTNSS. Results showing nTSL for the focus L2 sensitivity are shown in Table 22.11-4. These results showed changes to the release categories. Based on the L2 focus and RTNSS sensitivities, the NRC goal of 1E-06/yr LRF is met for RTNSS but exceeded by the focus sensitivity.

Crediting the RTNSS systems in addition to all safety-related systems significantly improves plant response to initiating events, as shown by the RTNSS sensitivities. These findings are consistent with the results from previous PRA revisions and result in no new PRA insights.

22.11.4 CCIW Sensitivity

The current L2 model contains wet core-concrete interaction (CCIW) as a failure mode for the containment. The BiMAC test program and report have shown that the heat transfer/removal capability of the BiMAC design is more than adequate for all reasonable accident scenarios. The sensitivity was conducted to better understand the impact to nTSL and source terms by excluding this failure mode as “physically unreasonable.”

The sensitivity was conducted by creating flag files to set the CCIW failure events to FALSE for the quantification. The CCIW sensitivity was run using the Revision 3 PRA model at a truncation of 1E-15 with the additional flag files. In addition of the L2 PRA model, the impact of the removal of CCIW was also evaluated by using the focus and RTNSS models. The L2 CCIW sensitivity results are shown in Table 22.11-5.

By excluding the CCIW failure mode from the L2 analysis, the results show that the nTSL frequency and CCFP are both reduced due to the shift of the CCIW frequency to TSL. This reduction was most significant with for RTNSS model where the nTSL was reduced by about 36% from 1.24E-07/yr to 7.87E-08/yr. However, these reductions were not significant enough to impact the L1 and L2 focus results in meeting the NRC goals of 1E-04/yr CDF and 1E-06/yr LRF. No additional PRA insights were gained from the CCIW sensitivity.

22.11.5 Conclusions

None of the PRA results and insights presented in DCD Chapter 19 are affected by the additional sensitivities conducted on the Revision 3 of the PRA model.

Table 22.11-1

System Importance Results

System ID	System Name	Truncation	Results						Risk Significance[1]	
			# Cutsets	CDF (T)	# Cutsets	CDF (F)	RAW	FV	RAW	FV
B21	Automatic Depressurization System	1.00E-12	94259	9.43E-05	525	6.82E-09	10715	0.23	yes	yes
		1.00E-13	245504	9.40E-05	3407	7.61E-09	8914	0.28	yes	yes
		1.00E-14	636142	9.40E-05	23360	8.18E-09	8094	0.30	yes	yes
B32	Isolation Condenser System	1.00E-12	345792	1.14E-05	1002	8.73E-09	1298	0.01	yes	no
		1.00E-13	1718479	1.18E-05	7008	1.04E-08	1121	0.01	yes	no
		1.00E-14	error[2]	error	40164	1.14E-08	NA	0.02	---	no
C12	Control Rod Drive System	1.00E-12	1821	5.67E-08	554	6.68E-09	6	0.24	yes	yes
		1.00E-13	8320	5.87E-08	4564	7.72E-09	6	0.27	yes	yes
		1.00E-14	39393	5.97E-08	30460	8.49E-09	5	0.27	no	yes
C41	Standby Liquid Control System	1.00E-12	599	4.02E-07	1074	7.30E-09	46	0.17	yes	yes
		1.00E-13	4329	4.03E-07	7137	9.11E-09	38	0.14	yes	yes
		1.00E-14	31039	4.04E-07	43299	1.02E-08	35	0.12	yes	yes
C62	Nonsafety DCIS	1.00E-12	5941	4.24E-06	1001	8.40E-09	482	0.05	yes	yes
		1.00E-13	26306	4.24E-06	7048	1.01E-08	402	0.04	yes	yes
		1.00E-14	87371	4.25E-06	42160	1.11E-08	366	0.04	yes	yes
C63	Safety Related DCIS	1.00E-12	37071	5.01E-05	878	6.19E-09	5700	0.30	yes	yes
		1.00E-13	211635	5.02E-05	6515	7.77E-09	4761	0.26	yes	yes
		1.00E-14	1047433	5.02E-05	35773	8.66E-09	4325	0.25	yes	yes
C71	Reactor Protection System	1.00E-12	979206	2.58E-02	1026	8.78E-09	2937365	0.00	yes	no
		1.00E-13	error	error	7256	1.05E-08	NA	0.00	---	no
		1.00E-14	error	error	43418	1.16E-08	NA	0.00	---	no

Table 22.11-1

System Importance Results

System ID	System Name	Truncation	Results						Risk Significance[1]	
			# Cutsets	CDF (T)	# Cutsets	CDF (F)	RAW	FV	RAW	FV
C72	Diverse Protection System	1.00E-12	46315	3.18E-05	1001	7.92E-09	3609	0.10	yes	yes
		1.00E-13	170966	3.18E-05	7096	9.62E-09	3016	0.09	yes	yes
		1.00E-14	589175	3.18E-05	45152	1.07E-08	2739	0.08	yes	yes
C74	Safety System Logic & Control	1.00E-12	1026	3.71E-07	1026	8.79E-09	42	0.00	yes	no
		1.00E-13	7230	3.72E-07	7265	1.05E-08	35	0.00	yes	no
		1.00E-14	42619	3.73E-07	43531	1.16E-08	32	0.00	yes	no
E50 (INJ)	Gravity Driven Cooling System	1.00E-12	109166	1.13E-05	649	4.71E-09	1280	0.46	yes	yes
		1.00E-13	433830	1.14E-05	4392	5.78E-09	1079	0.45	yes	yes
		1.00E-14	error	error	24137	6.35E-09	NA	0.45	---	yes
E50 (EQU)	Gravity Driven Cooling System	1.00E-12	133318	1.59E-05	649	4.71E-09	1807	0.46	yes	yes
		1.00E-13	534949	1.60E-05	4392	5.78E-09	1520	0.45	yes	yes
		1.00E-14	2152138	1.61E-05	24137	6.35E-09	1525	0.45	yes	yes
G21	Feedwater & Auxiliary Pool Cooling System	1.00E-12	1183	9.13E-09	1002	7.64E-09	1	0.13	no	yes
		1.00E-13	8348	1.12E-08	6999	9.34E-09	1	0.11	no	yes
		1.00E-14	46819	1.24E-08	38389	1.03E-08	1	0.11	no	yes
G21 (LPCI)	Feedwater & Auxiliary Pool Cooling System	1.00E-12	1057	8.87E-09	893	7.70E-09	1	0.12	no	yes
		1.00E-13	7445	1.07E-08	6304	9.21E-09	1	0.13	no	yes
		1.00E-14	44489	1.17E-08	36648	1.01E-08	1	0.13	no	yes
G21 (SPC)	Feedwater & Auxiliary Pool Cooling System	1.00E-12	1031	8.80E-09	1028	8.80E-09	1	0.00	no	no
		1.00E-13	7312	1.06E-08	7252	1.05E-08	1	0.00	no	no
		1.00E-14	43957	1.16E-08	43408	1.16E-08	1	0.00	no	no

Table 22.11-1

System Importance Results

System ID	System Name	Truncation	Results						Risk Significance[1]	
			# Cutsets	CDF (T)	# Cutsets	CDF (F)	RAW	FV	RAW	FV
G31	Reactor Water Cleanup/ Shutdown Cooling System	1.00E-12	1048	8.83E-09	1028	8.80E-09	1	0.00	no	no
		1.00E-13	7385	1.06E-08	7252	1.05E-08	1	0.00	no	no
		1.00E-14	44114	1.17E-08	43477	1.16E-08	1	0.00	no	no
N21 (CST)	Condensate & Feedwater System	1.00E-12	2462	8.47E-08	995	8.66E-09	10	0.02	yes	yes
		1.00E-13	10399	8.70E-08	7105	1.04E-08	8	0.02	yes	yes
		1.00E-14	49958	8.82E-08	42428	1.14E-08	8	0.02	yes	yes
N21 (INJ)	Condensate & Feedwater System	1.00E-12	1030	8.80E-09	995	8.70E-09	1	0.01	no	no
		1.00E-13	7284	1.05E-08	7105	1.04E-08	1	0.02	no	no
		1.00E-14	43647	1.16E-08	42428	1.14E-08	1	0.02	no	no
N37	Turbine Bypass System	1.00E-12	1030	8.80E-09	1029	8.80E-09	1	0.00	no	no
		1.00E-13	7284	1.05E-08	7274	1.05E-08	1	0.00	no	no
		1.00E-14	43647	1.16E-08	43567	1.16E-08	1	0.00	no	no
N71	Circulating Water System	1.00E-12	1030	8.80E-09	1029	8.80E-09	1	0.00	no	no
		1.00E-13	7284	1.05E-08	7274	1.05E-08	1	0.00	no	no
		1.00E-14	43647	1.16E-08	43567	1.16E-08	1	0.00	no	no
P21	Reactor Component Cooling Water System	1.00E-12	3078	1.39E-07	1002	8.71E-09	16	0.01	yes	yes
		1.00E-13	14105	1.43E-07	6592	1.03E-08	14	0.02	yes	yes
		1.00E-14	56073	1.44E-07	34348	1.11E-08	12	0.04	yes	yes
P22	Turbine Component Cooling Water System	1.00E-12	3421	3.02E-07	1020	8.77E-09	34	0.00	yes	no
		1.00E-13	15243	3.05E-07	7178	1.05E-08	29	0.00	yes	no
		1.00E-14	74154	3.07E-07	43061	1.16E-08	26	0.01	yes	no

Table 22.11-1

System Importance Results

System ID	System Name	Truncation	Results						Risk Significance[1]	
			# Cutsets	CDF (T)	# Cutsets	CDF (F)	RAW	FV	RAW	FV
P41	Plant Service Water System	1.00E-12	6417	4.24E-06	964	8.57E-09	482	0.03	yes	yes
		1.00E-13	28375	4.25E-06	6841	1.02E-08	403	0.03	yes	yes
		1.00E-14	104263	4.25E-06	40219	1.12E-08	366	0.04	yes	yes
P51	Service Air System	1.00E-12	1029	8.80E-09	1029	8.80E-09	1	0.00	no	no
		1.00E-13	7274	1.05E-08	7262	1.05E-08	1	0.00	no	no
		1.00E-14	43567	1.16E-08	43506	1.16E-08	1	0.00	no	no
P52	Instrument Air System	1.00E-12	2816	1.08E-07	1029	8.80E-09	12	0.00	yes	no
		1.00E-13	12649	1.10E-07	7274	1.05E-08	10	0.00	yes	no
		1.00E-14	65598	1.12E-07	43555	1.16E-08	10	0.00	yes	no
P54	High Pressure Nitrogen Supply System	1.00E-12	1080	8.92E-09	1029	8.80E-09	1	0.00	no	no
		1.00E-13	7537	1.07E-08	7242	1.05E-08	1	0.00	no	no
		1.00E-14	44980	1.18E-08	43003	1.16E-08	1	0.00	no	no
R10	Electrical Power Distribution System	1.00E-12	40198	7.59E-07	1029	8.80E-09	86	0.00	yes	no
		1.00E-13	178585	8.00E-07	7263	1.05E-08	76	0.00	yes	no
		1.00E-14	750091	8.17E-07	43401	1.16E-08	NA	0.00	yes	no
R11	Medium Voltage Distribution System	1.00E-12	9826	5.07E-06	1029	8.80E-09	577	0.00	yes	no
		1.00E-13	46246	5.08E-06	7122	1.05E-08	482	0.00	yes	no
		1.00E-14	185012	5.09E-06	41704	1.15E-08	438	0.01	yes	no
R12	Low Voltage Distribution System	1.00E-12	4583	2.18E-07	1029	8.80E-09	25	0.00	yes	no
		1.00E-13	19305	2.24E-07	7274	1.05E-08	21	0.00	yes	no
		1.00E-14	77594	2.24E-07	43557	1.16E-08	19	0.00	yes	no

Table 22.11-1

System Importance Results

System ID	System Name	Truncation	Results						Risk Significance[1]	
			# Cutsets	CDF (T)	# Cutsets	CDF (F)	RAW	FV	RAW	FV
R13 (Safety)	Uninterruptible AC Power Supply System - Safety Related	1.00E-12	92546	3.06E-05	1029	8.80E-09	3480	0.00	yes	no
		1.00E-13	527079	3.07E-05	7274	1.05E-08	2916	0.00	yes	no
		1.00E-14	2574761	3.71E-05	43563	1.16E-08	3195	0.00	yes	no
R13 (NS)	Uninterruptible AC Power Supply System - NonSafety Related	1.00E-12	14467	1.73E-04	1019	8.72E-09	19620	0.01	yes	no
		1.00E-13	66909	1.73E-04	7225	1.05E-08	16376	0.01	yes	no
		1.00E-14	243356	1.73E-04	43264	1.15E-08	14866	0.01	yes	no
R16 (Safety)	Direct Current Power Supply - Safety Related	1.00E-12	52233	3.41E-07	1029	8.80E-09	39	0.00	yes	yes
		1.00E-13	349029	4.24E-07	7272	1.05E-08	40	0.00	yes	yes
		1.00E-14	error	error	43557	1.16E-08	NA	0.00	yes	yes
R16 (NS)	Direct Current Power Supply - NonSafety Related	1.00E-12	7219	5.27E-05	990	8.58E-09	5986	0.03	yes	no
		1.00E-13	28928	5.27E-05	7025	1.03E-08	4997	0.03	yes	no
		1.00E-14	154748	5.27E-05	42009	1.13E-08	4537	0.03	yes	no
R21	Standby On Site AC Power Supply	1.00E-12	1533	2.63E-08	841	8.40E-09	3	0.05	no	yes
		1.00E-13	8403	2.84E-08	5056	9.55E-09	3	0.09	no	yes
		1.00E-14	36306	2.91E-08	30321	1.03E-08	3	0.11	no	yes
T10	Containment System	1.00E-12	278084	5.24E-03	1028	8.80E-09	595999	0.00	yes	yes
		1.00E-13	2002588	3.87E-04	7251	1.05E-08	36670	0.00	yes	yes
		1.00E-14	error	error	43366	1.16E-08	NA	0.00	---	yes
T15	Passive Containment Cooling System	1.00E-12	203757	7.59E-06	1029	8.80E-09	863	0.00	yes	no
		1.00E-13	1133632	7.85E-06	7272	1.05E-08	745	0.00	yes	no
		1.00E-14	error	error	43519	1.16E-08	NA	0.00	---	no

Table 22.11-1

System Importance Results

System ID	System Name	Truncation	Results						Risk Significance[1]	
			# Cutsets	CDF (T)	# Cutsets	CDF (F)	RAW	FV	RAW	FV
T23	Suppression Pool System	1.00E-12	1080	9.00E-09	1029	8.80E-09	1	0.00	no	no
		1.00E-13	7716	1.09E-08	7274	1.05E-08	1	0.00	no	no
		1.00E-14	45587	1.20E-08	43567	1.16E-08	1	0.00	no	no
T31	Containment Inerting System	1.00E-12	1029	8.80E-09	1029	8.80E-09	1	0.00	no	no
		1.00E-13	7274	1.05E-08	7274	1.05E-08	1	0.00	no	no
		1.00E-14	43567	1.16E-08	43567	1.16E-08	1	0.00	no	no
U40	Reactor Building HVAC	1.00E-12	1048	8.83E-09	1029	8.80E-09	1	0.00	no	no
		1.00E-13	7385	1.06E-08	7274	1.05E-08	1	0.00	no	no
		1.00E-14	44114	1.17E-08	43567	1.16E-08	1	0.00	no	no
U43 (INJ)	Fire Protection System	1.00E-12	1948	1.54E-08	1027	8.79E-09	2	0.00	no	no
		1.00E-13	14432	1.88E-08	7235	1.05E-08	2	0.00	no	no
		1.00E-14	73265	2.05E-08	43006	1.16E-08	2	0.00	no	no
U43 (MKUP)	Fire Protection System	1.00E-12	8558	4.70E-08	1029	8.80E-09	5	0.00	yes	no
		1.00E-13	67295	6.34E-08	7264	1.05E-08	6	0.00	yes	no
		1.00E-14	363416	7.22E-08	43342	1.16E-08	6	0.00	yes	no

NOTES:

(1) Risk significance based on a Fussell-Vesely importance value > 0.01 and/or a risk achievement worth (RAW) value > 5.

(2) Values reported as error result from scenarios generating a number of cutsets in excess of the memory limitations of the model

Table 22.11-2

System Importance Results – RAW Rankings

System ID	System Name	Previous Result (Rev 2)		Current Result (Rev 3)	
		RAW	Ranking	RAW	Ranking
C71	Reactor Protection System	2423734**	1	2937365*	1
T10	Containment System	491857**	2	36670**	2
R13 (NS)	Uninterruptible AC Power Supply System - Non-Safety Related	1444	9	14866	3
B21	Automatic Depressurization System	7202	5	8094	4
R16 (NS)	Direct Current Power Supply - Non-Safety Related	172	15	4537	5
C63	Safety Related DCIS	4165	6	4325	6
R13 (Safety)	Uninterruptible AC Power Supply System - Safety Related	58805	3	3195	7
C72	Diverse Protection System	9606	4	2739	8
E50 (EQU)	Gravity Driven Cooling System	1638**	8	1525	9
B32	Isolation Condenser System	1681	7	1121**	10
E50 (INJ)	Gravity Driven Cooling System	1155**	10	1079**	11
T15	Passive Containment Cooling System	835**	11	745**	12
R11	Medium Voltage Distribution System	411	12	438	13
C62	Nonsafety DCIS	409	13	366	14 (tie)
P41	Plant Service Water System	404	14	366	14 (tie)

Table 22.11-2

System Importance Results – RAW Rankings

System ID	System Name	Previous Result (Rev 2)		Current Result (Rev 3)	
		RAW	Ranking	RAW	Ranking
R10	Electrical Power Distribution System	163	16	76**	16
R16 (Safety)	Direct Current Power Supply - Safety Related	89	17	40**	17
C41	Standby Liquid Control System	34	19	35	18
C74	Safety System Logic & Control	41	18	32	19
P22	Turbine Component Cooling Water System	29	20	26	20
R12	Low Voltage Distribution System	21	21	19	21
P21	Reactor Component Cooling Water System	13	22	12	22
P52	Instrument Air System	11	23	10	23
N21 (CST)	Condensate & Feedwater System	9	24	8	24
U43 (MKUP)	Fire Protection System - Makeup	---	---	6	25
C12	Control Rod Drive System	5	25	5	26

* Based on a truncation value of 1E-12

** Based on a truncation value of 1E-13

Table 22.11-3

System Importance Results - FV Rankings

System ID	System Name	Previous Results (Rev. 2)		Current Results (Rev. 3)	
		FV	Ranking	FV	Ranking
E50 (EQU)	Gravity Driven Cooling System	---	---	0.45	1 (tie)
E50 (INJ)	Gravity Driven Cooling System	0.45	1	0.45	1 (tie)
B21	Automatic Depressurization System	0.36	3	0.30	3
C12	Control Rod Drive System	0.24	6	0.27	4
C63	Safety Related DCIS	0.25	5	0.25	5
G21 (LPCI)	Feedwater & Auxiliary Pool Cooling System	0.12	7	0.13	6
C41	Standby Liquid Control System	0.12	9	0.12	7
R21	Standby On Site AC Power Supply	0.12	8	0.11	8
C72	Diverse Protection System	0.03	14	0.08	9

Table 22.11-4

Focus/RTNSS Sensitivity Results

Sensitivity Case	Focus & Sensitivity Results		
	CDF	nTSL	CCFP
Level 1 – Base (Revision 3)	1.21E-08/yr	8.99E-10/yr	0.074
FOCUS @ 1E-13	2.62E-04/yr	2.49E-04/yr	0.948
FOCUS@ 1E-14	2.62E-04/yr	2.49E-04/yr	0.948
RTNSS @ 1E-13	4.57E-06/yr	1.22E-07/yr	0.027
RTNSS @ 1E-14	4.57E-06/yr	1.24E-07/yr	0.027

Table 22.11-5

CCIW Sensitivity Results

Release Category	Level 1 - Rev. 3		Level 1 Focus - Rev. 3		Level 1 RTNSS - Rev. 3	
	L1	w/ CCIW PU	Focus	w/ CCIW PU	RTNSS	w/ CCIW PU
TSL	1.12E-08	1.13E-08	1.35E-05	1.66E-05	4.45E-06	4.49E-06
FR	7.51E-11	7.51E-11	1.80E-04	1.79E-04	1.71E-08	1.71E-08
OPW2	9.33E-12	9.33E-12	4.27E-06	4.24E-06	1.02E-09	1.03E-09
OPW1	1.37E-11	1.36E-11	2.38E-08	2.37E-08	4.50E-10	4.51E-10
OPVB	1.40E-12	1.40E-12	2.90E-08	2.89E-08	5.56E-10	5.57E-10
BYP	4.54E-11	4.53E-11	6.12E-05	6.12E-05	1.74E-08	1.75E-08
CCIW	9.94E-11		2.60E-06		4.51E-08	
CCID	9.76E-13	9.79E-13	5.18E-08	5.17E-08	8.65E-10	8.67E-10
EVE	6.04E-10	6.04E-10	3.30E-08	3.31E-08	3.09E-09	3.09E-09
BOC	4.97E-11	4.97E-11	6.65E-07	6.64E-07	3.81E-08	3.82E-08
CDF	1.21E-08	1.21E-08	2.62E-04	2.62E-04	4.57E-06	4.57E-06
CCFP	0.074	0.066	0.948	0.937	0.027	0.017
nTSL	8.99E-10	7.99E-10	2.49E-04	2.46E-04	1.24E-07	7.87E-08

22.12 PROBABILISTIC FIRE ANALYSIS

This subsection evaluates the impact of the DCD Revision 5 design changes and PRA Revision 3 modeling changes to the probabilistic fire analysis.

22.12.1 Overview

The Revision 3 baseline Level 1 and Level 2 PRA models have been updated to reflect design changes and incorporate modeling changes to support DCD Revision 5. As demonstrated in Subsections 22.7 and 22.8, the Revision 3 baseline PRA results have not changed significantly from the previous revision. The PRA insights and conclusions documented in DCD Chapter 19, Revision 5, have not been affected by the Revision 3 design and modeling changes.

The design changes in DCD Revision 5 that can potentially affect fire analysis are the updates of general arrangement drawings and fire areas, the addition of the ancillary diesel generators, the detail designs of the fire pump enclosure, the vacuum breaker isolation valve design update, and the addition of redundant divisions of Q-DCIS control to the ICS/PCCS cross-connection valves.

The PRA model changes in Revision 3 for enhancement have negligible impact on the fire analysis because the model enhancements do not affect the spatial arrangement and do not change the assumed separation criteria for the safety-related and the RTNSS systems. For non-RTNSS systems, a bounding approach has been taken in the fire analysis, which does not credit separation for these systems.

With the separation criteria implemented in the detail designs, which are reflected in DCD Revision 5 changes, the overall impact on fire PRA due to both the design and PRA model changes is not significant.

22.12.2 Significant Design and Model Changes

There have been design changes and development for DCD Revision 5 that affect the fire PRA model. These changes have been explained in detail throughout the system documentation, baseline Level 1 and Level 2 quantifications, and other earlier subsections of Section 22.

A qualitative assessment of external events impact has been documented in the subsections of Section 22 for system model updates, if applicable. DCD Tier 2 Revision 5 Subsection 9.5 and Appendix 9A document all the updates in fire protection system, fire area definitions and fire hazard analysis. The following subsections describe the design changes in DCD Revision 5 that can potentially affect fire analysis; changes that only affect fire area descriptions or titles are not listed.

22.12.2.1 Changes in Fire Areas

22.12.2.1.1 Changes in Nuclear Island Fire Areas

The following changes in DCD Revision 5 for nuclear island fire areas can potentially impact the fire analysis:

(1) North wall of fire area F2192, “Elevator A”, is changed from 3-hour rated to 1.5-hour rated fire barrier.

(2) Separate fire areas F3301 and F3140 have been defined for the N-DCIS room 3301 and Q-DCIS room 3140.

The second DCD Revision 5 change incorporates the PRA insights based on the fire analysis, which improves the ESBWR plant's mitigating capability for a fire in the subject Control Building DCIS rooms. Fire area F3301 has already been assumed in the Revision 2 fire PRA model.

22.12.2.1.2 Changes in Turbine Building Fire Areas

The following changes in DCD Revision 5 for Turbine Building fire areas can potentially impact the fire analysis:

(1) Replaced fire area F4100 with F4197, "Turbine Equipment", for the Turbine Building general areas.

(2) Deleted fire area F4103.

(3) Added new fire areas F4302 and F4303, "Instrument Air / Service Air Train A (or B)", which replaced fire areas F4350 and F4360 in DCD Revision 4, respectively.

(4) Deleted fire areas F4307.

(5) Added new fire area F4403, "Turbine Lube Oil", which replaced fire area F4308 in DCD Revision 4.

(6) Added new fire areas F4650 and F4660, "Chilled Water A (or B)", which replaced fire areas F4651 and F4661 in DCD Revision 4, respectively.

22.12.2.1.3 Changes in Electrical Building Fire Areas

The following changes in DCD Revision 5 for Electrical Building fire areas can potentially impact the fire analysis:

(1) Added a new fire area F5104, "Fire Protection Equipment", to replace fire area F5188 in DCD Revision 4.

(2) Added a new fire area F5151, "Batteries A", to replace fire area F5150 in DCD Revision 4.

(3) Added a new fire area F5153, "Diesel Generator A", to replace fire area F5154 in DCD Revision 4.

(4) Added a new fire area F5154, "Cable Chase Train A", which includes room 5154 originally included in deleted fire area F5450 in DCD Revision 4.

(5) Added a new fire area F5161, "Batteries B", to replace fire area F5160 in DCD Revision 4.

(6) Added a new fire area F5163, "Diesel Generator B", to replace fire area F5164 in DCD Revision 4.

(7) Added a new fire area F5164, "Cable Chase Train B", which includes room 5164 originally included in deleted fire area F5260 in DCD Revision 4.

(8) Added new fire areas F5201 through F5205 for design development. Two elevations in the Electrical Building have been deleted in DCD revision 5 (Figures 9A.2-27 for elevation

13000 and 9A.2-29 for elevation 22000). The new fire areas replace the following fire areas in DCD Revision 4:

a. F5201, "Switchgear, Lower Cable & Battery Charger I", replaces F5250, F5350 and F5450.

b. F5202, "Battery Charger C", replaces F5301.

c. F5203, "Lower Cable & Battery Charger III", replaces F5302.

d. F5204, "Switchgear, Lower Cable & Battery Charger II", replaces F5260, F5360 and F5460.

e. F5205, "Electronic Equipment", replaces F5303.

(9) Changed fire area F5250 name from "Lower Cable Spreading A" to "Day Tank A", which replaces fire area F5255 in DCD Revision 4.

(10) Added a new fire area F5251, "Diesel Generator Electrical & Control Equipment Room A", to replace fire area F5156 in DCD Revision 4.

(11) Changed fire area F5260 name from "Lower Cable Spreading B" to "Day Tank B", which replaces fire area F5265 in DCD Revision 4.

(12) Added a new fire area F5261, "Diesel Generator Electrical & Control Equipment Room B", to replace fire area F5166 in DCD Revision 4.

(13) Changed fire area F5350 name from "Lower Electrical Equipment A" to "Electrical Equipment A", which replaces fire area F5550 in DCD Revision 4.

(14) Changed fire area F5360 name from "Lower Electrical Equipment B" to "Electrical Equipment B", which replaces fire area F5560 in DCD Revision 4.

(15) Changed fire area F5450 name from "Upper Cable Spreading A" to "HVAC TSC & EER Equipment A", which replaces F5650 in DCD Revision 4.

(16) Changed fire area F5460 name from "Upper Cable Spreading B" to "HVAC TSC & EER Equipment B", which replaces F5660 in DCD Revision 4.

22.12.2.1.4 Changes in Other Fire Areas

The following changes have been incorporated in DCD Revision 5 for other fire areas that can potentially impact the fire analysis:

(1) Added the Ancillary Diesel Building (ADB) fire areas.

(2) Added the fire pump enclosure (FPE) fire areas.

(3) Added new fire area F9190, "Controlled Access", for room 9190, which is the enclosure for access tunnel stairs.

(4) Deleted fire area designator F7170 near the transformer area on Figure 9A.2-33.

(5) Deleted fire area designator F7300 near the Service Water and Water Treatment Building (SF/WT) on Figure 9A.2-33 to be consistent with the current design.

(6) Deleted fire areas F4251, F4252, F4261, F4262 from the yard area because the main feedwater pump ASD transformers are no longer required.

22.12.2.2 Changes Associated with the AC Power and UPS Systems

Per Subsection 22.4.14, two nonsafety-related ancillary diesel generators have been designed to provide additional independent sources of onsite AC power. The dependencies to the ancillary diesel generator buses are added in the following PRA systems:

- The RPV make-up pump
- Safety-related and nonsafety-related UPS buses (Ancillary diesel generator buses back up the 480 VAC buses that supply AC power to the UPS bypass transformers.)

The RPV make-up pump was previously designed as a diesel-driven pump, which was totally independent from the onsite and offsite AC power sources. The model change to power this pump with the ancillary diesel generator does not have significant risk impact because the ancillary diesel generators are totally independent from other onsite and offsite AC power sources.

22.12.2.3 Changes Associated with the Containment System

The following are the changes associated with the containment system (see subsection 22.4.18 for further documentation):

(1) Containment venting no longer depends on Q-DCIS and IAS.

(2) Isolation of MSIVs by DPS is now modeled.

(3) The nonsafety-related valves credited for RWCU/SDC BOC isolation now receive N-DCIS signal.

(4) The vacuum breaker isolation valve (VBIV) design has been specified and increases reliability of the steam suppression function of containment.

For the first three changes, the Revision 2 fire analysis is bounding and no update to the fire PRA model is necessary. The design change associated with VBIVs introduces new fire-induced failure modes.

The VBIV logic cabinets are assumed to be located as follows:

- VBIV 1 in fire area F1311
- VBIV 2 in fire area F1321
- VBIV 3 in fire area F1331

The fourth divisional room in the Reactor Building, fire area F1341, is assumed to not contain any VBIV logic components. Also important, all control and power cables are assumed to penetrate the drywell in the same room in which the respective VBIV logic cabinet exists and then be routed to the appropriate VBIV. These assumptions allow a fire in a single fire area to only affect at most one VBIV, except for the containment fire area, which is inerted during at-power operation.

22.12.2.4 Changes Associated with the ICS/PCCS Cross-Connection Valves

As discussed in subsection 22.4.2, the Revision 2 PRA had only one division of Q-DCIS signal to each of the B32-F104 (ICS/PCCS pool cross-connect) valves, which does not support the N-2

requirement for safety-related functions. With that arrangement, certain focused (no DPS credit) fire propagation scenarios failed the long-term pool make-up function by burning the two divisional rooms that controlled both valves to one half of the pools.

A design change in DCD Revision 5 specifies two diverse divisions to each of the valves on one side of the pool; for example, one valve receives Div 1/3, while the other receives Div 2/4. Since the valves are in parallel, this design satisfies N-2 design criteria.

22.12.3 Results Impact

The following subsections address the changes listed in subsection 22.12.2 by either quantitative or qualitative evaluations.

For completeness, Subsection 22.12.3.5 also qualitatively evaluates the seismic/fire interaction issues.

22.12.3.1 Quantitative and Qualitative Evaluations for Fire Area Changes

22.12.3.1.1 Evaluations for the Nuclear Island Fire Area Changes

For the changes identified in Subsection 22.12.2.1.1, a qualitative evaluation is deemed to be appropriate.

The first change associated with fire area F2192, Elevator A, has no impact on the Revision 2 fire analysis because F2192 was qualitatively screened in Table 12.6-2. The change has no impact on the screening basis.

The second change has no impact on the Revision 2 fire analysis because the fire PRA model has already assumed the separation of the two DCIS rooms.

22.12.3.1.2 Evaluations for the Turbine Building Fire Area Changes

For the changes identified in Subsection 22.12.2.1.2, the impact on the Revision 2 fire PRA model is evaluated as follows:

(1) Changes #1, 2 and 4 are resulted from the detail design for DCD Revision 5, which merged the feedwater pump area (F4103), turbine EHC (F4307) and turbine lube oil (F4308) areas into the turbine equipment area (i.e., Turbine Building general area F4100 in DCD Revision 4). Fire area F4100 has also been renamed to F4197 in DCD Revision 5. The Turbine Building general area is modeled conservatively by assuming that any fire can cause damage to all the components in this fire area, which consists of multiple floors and covers a large area on each floor. No credit for fire suppression is taken either, which is available for the areas with high combustible loading. Therefore, with the embedded conservatism, this DCD Revision 5 design change will not result in significant fire risk increases.

(2) Changes #3, 5 and 6 have no impact on the fire PRA model other than the fire area name changes.

Based on above evaluations, the fire risk for fire area F4197 has been quantitatively estimated with the following method:

(1) The Revision 2 fire PRA model was used.

(2) The ignition frequency for fire area F4197 was estimated as the sum of all the ignition frequencies for fire areas F4100, F4103, and F4307 in Revision 2 fire PRA model.

(3) The ignition frequency for fire area F4197 was further increased to account for the reactor feedwater pump (RFP) ASD power units. The RFP ASD power units do not require external transformers, which resulted in the deletion of the fire areas F4251, F4252, F4261 and F4262 in the yard area. For conservatism, the four RFP ASD power units are counted as four dry transformers (bin #23b in Table 12.7-1) although they are not typical of industry "power transformers".

(4) A fire in fire area F4197 is assumed to result in loss of feedwater.

(5) The damage states for all four fire areas in Revision 2 (as shown in Table 12.8-1) were combined to be the damage states for the new fire area F4197.

Based on the fire ignition frequencies in Table 12.7-4, the ignition source bins in Table 12.7-1, and the template for ignition frequency calculation in Table 12.7-3, the F4197 ignition frequency is calculated as:

%F4197

= %F4100 + %F4103 + %F4307 + Assumed ASD Ignition Sources

= 2.89E-02 + 1.47E-02 + 8.94E-04 + 4 / 65 * 9.99E-3

= 4.52E-2/yr

The sensitivity study case fire area F4197 encompasses the effects of the Revision 2 baseline fire areas F4100, F4103, and F4307. The fire propagation cases F4100_F4103 and F4103_F4100 no longer exist in the sensitivity case. Therefore, it is appropriate to compare the F4197 risk contribution in the sensitivity case with the total risk contributions from F4100, F4103, F4307, F4100_F4103 and F4103_F4100 in the Revision 2 baseline model.

Table 22.12-1 shows the sensitivity results, which are compared to the baseline results. The total CDF increase associated with the Turbine Building fire area changes is 1.01E-10/yr (or 1.3% of the Revision 2 total fire CDF). The total LRF (nTSL) increase associated with the changes is 2.69E-11/yr (or 5.6% of the Revision 2 total fire LRF).

More bounding assumptions were used in the Revision 2 baseline shutdown fire analysis. The fire area changes have no impact on these bounding assumptions. Therefore, no new analysis for shutdown fire analysis is required for the Turbine Building fire area changes.

Provided with the bounding assumptions for the Turbine Building fire scenarios, the risk increases associated with the Turbine Building fire area changes are not significant. The Turbine Building general area (turbine equipment area) is still one of the top fire risk contributors. No new fire PRA risk insight is identified with the fire area changes.

22.12.3.1.3 Evaluations for the Electrical Building Fire Area Changes

With the deletion of two elevations in the Electrical Building fire zone figures, the Electrical Building fire area designators have been changed to be consistent with their new elevations. For the changes identified in Subsection 22.12.2.1.3, the impact on the Revision 2 fire PRA model is evaluated as follows:

(1) Changes except for #4, 7 and 8 have no impact on the fire PRA model other than the fire area name changes.

(2) Changes #4 and 7 result in new fire areas F5154 and F5164, "Cable Chase Train A (or B)".

(3) In change #8, fire areas F5202, F5203 and F5205 have no impact on the fire PRA model other than the fire area name changes. Fire areas F5201 and F5204 replace several fire areas on multiple elevations in the Revision 2 fire PRA model. The Revision 2 fire PRA model has already assumed that no PRA component was located in the lower and upper cable spreading rooms, F5250, F5450, F5260, and F5460. Therefore, fire area F5201 actually replaces fire area F5350 in Revision 2 fire PRA model and fire area F5204 replaces F5360, which have no impact on the fire PRA model other than the fire area name changes.

Based on the above evaluation, only new fire areas F5154 and F5164 require additional analysis to estimate their fire risk impact. Per DCD Tier 2 Revision 5 Figure 9A.2-25, fire areas F5154 and F5164 can be considered as the extensions of cable tunnel fire areas F9150 and F9160 in the Electrical Building, respectively. The fire risk results associated with F9150 and F9160 can be conservatively used to show F5154 and F5164's fire risks because the Electrical Building cable chases should have less cable runs than the cable tunnels.

A review of the Revision 2 fire PRA model indicated that F9160 was one of the significant contributors to LRF (nTSL), which accounted for about 30% of total fire LRF (see Table 12.9-2). This was resulted by a conservative assumption that FMCRD power cables were routed through the cable tunnels. This fire risk insight was associated with the detailed design. The current detailed design has addressed this issue by not routing the FMCRD power cables all the way to the Electrical Building through the cable tunnels. (i.e., the FMCRD power cables are routed inside the Reactor Building while the 6.9 kV PIP bus cables are routed from the Electrical Building via the cable tunnels to the Reactor Building.) Therefore, the conservatism associated with the assumed Revision 2 FMCRD power cable routing has been removed.

The Revision 2 fire PRA model has been used to quantitatively estimate the fire risk changes associated with fire areas F9150, F9160 and the new Electrical Building fire areas F5154 and F5164. The damage states for fire areas F9150 and F9160 have been modified to remove the failures of FMCRD power cables.

By assuming that the new fire areas F5154 and F6164 have the same fire ignition frequencies as F9150 and F9160, respectively, the sensitivity study case results for the Electrical Building fire area changes are summarized in Table 22.12-2. With the removal of conservatism associated with the FMCRD power cable routing, the total risk contributions from the fire scenarios associated with fire areas F5154, F5164, F9150 and F9160 are:

- CDF contribution of 9.072E-10/yr (or 11.3% of total baseline fire CDF)
- LRF contribution of 6.158E-11/yr (or 12.7% of total baseline fire LRF)

Overall, the total CDF increase associated with the Electrical Building fire area changes is 3.16E-10/yr (or 3.9% of the Revision 2 total fire CDF). The total LRF (nTSL) associated with the changes has resulted in a reduction of 1.143E-10/yr (or a reduction of 23.6% of the Revision 2 total fire LRF).

More bounding assumptions were used in the Revision 2 baseline shutdown fire analysis. The new Electrical Building fire areas F5154 and F5164 can also be simulated as the extension of fire areas F9150 and F9160 in the shutdown fire model. The baseline shutdown fire propagation scenario associated with fire areas F9150 and F9160 has negligible contribution to the total baseline shutdown fire CDF and LRF. Therefore, it is concluded that the new fire areas F5154 and F5164 has negligible contribution to the total shutdown fire CDF and LRF.

By removing one of the bounding assumptions for the Electrical Building fire scenarios, the risk changes associated with the Electrical Building fire area changes are not significant. No new fire PRA risk insight is identified with the fire area changes.

22.12.3.1.4 Evaluations for Other Fire Area Changes

For the changes identified in Subsection 22.12.2.1.4, the impact on the Revision 2 fire PRA model is evaluated as follows:

(1) Change #1 added new fire areas for the detailed design in the new Ancillary Diesel Building (ADB). Multiple fire areas have been added with separation criteria implemented for the two trains. As discussed in Subsection 22.4.14.3.1, there are new fire ignition sources in the new structure housing the ancillary diesels. However, a fire in the ancillary diesel generator room should only affect one ancillary diesel generator and have negligible affect on the plant operation because this fire has no impact on the offsite power and standby diesel generators. Therefore, a postulated fire in the Ancillary Diesel Building has no impact on normal plant operation and thus can be screened out as a fire initiating event.

(2) Change #2 added multiple fire areas in the Fire Pump Enclosure (FPE) building. With separation criteria implemented in the detailed designs, a fire in any FPE room can only affect one fire protection pump. Therefore, a postulated fire in the FPE building has no impact on normal plant operation and thus can be screened out as a fire initiating event.

(3) Change #3 added new fire area F9190 for room 9190, which is the enclosure for access tunnel stairs. A postulated fire in this fire area has no impact on normal plant operation and thus can be screened out as a fire initiating event.

(4) Change #4 deleted fire area designator F7170 near the transformer area on Figure 9A.2-33. This is an editorial change that has no impact on fire PRA models.

(5) Change #5 deleted fire area designator F7300 near the Service Water and Water Treatment building (SF/WT) on Figure 9A.2-33 to be consistent with the current design. This change clarified the fire protection design in the SF/WT building, which resulted in the removal of another bounding assumption in the baseline fire PRA models.

Based on the above evaluation, only change #5 associated with the SF/WT fire areas need further analysis. All other changes have been qualitatively screened, which have negligible impact on the baseline fire PRA models.

DCD Tier 2 Subsection 9A.4.9, "Service Water/Water Treatment Building", states:

> "However, this building contains Service Water equipment, which has Regulatory Treatment of Non-Safety Systems (RTNSS) functions. Fire barriers of three hour minimum fire resistance rating shall be provided separating redundant RTNSS trains. The

basic fire protection features are presented in a method similar to that used for other buildings."

In Table 12.9-3, the shutdown fire risk from F7300 (SF/WT fire area in the baseline fire model) is about 27% of total baseline fire risks, which is a significant shutdown fire risk contributor. Note 2 for Table 12.9-3, "Shutdown Core Damage Frequency Due to Internal Fires", states:

> "Shutdown fire scenario for plant service water area (F7300) is conservatively assumed. The plant service water (PSW) system is part of RTNSS program. Therefore, a fire in a single fire area should not damage both PSW trains. With the final detailed design with separation criteria, this shutdown fire scenario should be screened."

Based on the above statements, the bounding assumption in the baseline fire PRA models should be removed, which assumed that a fire in the SF/WT area would damage all the Plant Service Water (PSW) components. This change results in a reduction in both fire CDF and LRF contribution from the SF/WT fire areas.

Because the baseline CDF and LRF values are bounding, only the shutdown fire risk associated with the SF/WT area is evaluated as follows:

(1) The assumed new fire areas F7300a and F7300b replace F7300 in the baseline fire models.

(2) It is assumed that only a fire propagation scenario between F7300a and F7300b can result in a shutdown fire initiating event. The total initiating shutdown fire scenario frequency for both propagation cases F7300a_F7300b and F7300b_F7300a under each mode is calculated as:

%F7300a_F7300b & %F7300b_F7300a

= 2 * 0.5 * %F7300 * 7.4E-3 (assuming separated by a fire door)

= %F7300 * 7.4E-3

(3) The fire propagation scenarios in the SF/WT building fail all the PSW components, which are the same as the damage states for baseline fire scenario F7300 under each mode. Therefore, the CCDP results for F7300 in Table 12.9-3 can be used for this sensitivity study.

Table 22.12-3 shows the sensitivity results with a total CDF of 5.56E-11/yr from the updated SF/WT fire areas, which is 0.2% of the total baseline shutdown CDF of 2.712E-8/yr. Comparing with a total contribution of 27% in the baseline shutdown CDF, this sensitivity study proved that the implementation of the separation criteria in SF/WT building for the PSW components has resulted in negligible shutdown risk contribution from the SF/WT fire areas.

22.12.3.2 Qualitative Evaluation for the AC Power and UPS Systems Changes

As discussed in subsection 22.12.3.1.4, a postulated fire in the Ancillary Diesel Building has no impact on normal plant operation and thus can be screened out as a fire initiating event. The other changes in the AC power system result in no change in plant general arrangement. The changes associated with the Electrical Building fire areas have been evaluated separately in Subsection 22.12.3.1.3.

The UPS system design changes result in no change in plant general arrangement. Therefore, the Revision 2 fire PRA analysis is bounding because the ancillary diesel generators add more redundancies to the AC power sources to the UPS buses.

22.12.3.3 Quantitative Evaluation for the Containment System Changes

The Revision 2 fire PRA model was used for the evaluation. To simulate failure of the VBIV during a Reactor Building divisional room fire, the following basic events are set to true as new flags for the affected fire scenarios:

Fire Scenarios	New Flags (Set to TRUE)	Basis
F1311	T10-UV_-RL-1	VBIV 1 control logic failed due to a fire in F1311
F1321	T10-UV_-RL-2	VBIV 2 control logic failed due to a fire in F1321
F1331	T10-UV_-RL-3	VBIV 3 control logic failed due to a fire in F1331

These flags fail the VBIV ability to isolate a leaking vacuum breaker when there is a fire in the room in which the VBIV logic resides. The Revision 2 VBIV were normally closed but they are normally open in Revision 3. Therefore, the "fail to open" failure mode of the Revision 2 valves was not failed in this sensitivity because that is no longer a valid failure mode.

The baseline, internal events fire results for these three fire scenarios as well as the applicable fire propagation scenario are shown in Table 22.12-1. The sensitivity results are also shown in this table. All quantifications were performed with a truncation limit of 1E-15/yr to be consistent with the baseline results.

As shown in Table 22.12-4, the CDF and nTSL release frequency increases associated with the new VBIV control logic cabinets are minimal. The increases can be attributed to the fact that these fires now fail the ability of the VBIV to isolation a leaking vacuum breaker. However, since the probability of a vacuum breaker leak is already low at 1E-4, and the fire initiating event frequencies are in the E-3 range, the overall effect is small as shown.

Compared to the Revision 2 baseline CDF and LRF (nTSL frequency) of 8.058E-9/yr and 4.834E-10/yr, respectively, the increases in both due to VBIV logic cabinets in the Reactor Building divisional rooms are negligible.

More bounding assumptions were used in the Revision 2 baseline shutdown fire analysis. For example, all shutdown fire CDF is assumed to be LRF. The VBIV changes have no impact on these bounding assumptions. Therefore, no new analysis for shutdown fire analysis is required for the VBIV changes.

The above sensitivity study assumed the separation of the new VBIV control logic cabinet, which is considered as a key PRA insight and assumption.

22.12.3.4 Qualitative Evaluation for the ICS/PCCS Cross-Connection Valves

As discussed in Subsection 22.4.2.3.1, the ICS/PCCS cross-connect valves now receive two divisions of Q-DCIS each instead of just one as in the Revision 2 PRA. This change eliminates the possibility that a fire propagation case alone can fail the pool make-up function because each side of the pool receives all four divisions.

Therefore, the Revision 2 fire PRA analysis is bounding and no additional analysis is performed.

22.12.3.5 Qualitative Evaluation for Seismic/Fire Interaction Issues

The Revision 2 fire analysis documented in Section 12 does not explicitly address the seismic/fire interaction issues, especially the possibility of seismically induced fires that are required for the internal fire technical elements in RG 1.200 Revision 1.

This subsection qualitatively evaluates the following four seismic/fire interaction issues:

(1) Seismically induced fires;

(2) Degradation of fire suppression systems and features;

(3) Spurious operation of suppression and or detection systems; and

(4) Degradation of manual firefighting effectiveness.

There are no accepted methods for quantifying the risk contribution of the above issues and the qualitative approach is considered acceptable.

22.12.3.5.1 Evaluation of Issue #1 – Seismically Induced Fires

Unique seismically induced fire ignition source scenarios may exist. However, a plant walkdown is impossible for ESBWR unit in the design certification phase. Therefore, the following qualitative evaluation is based on the ESBWR design requirements.

Per DCD Tier 2 Section 3.2, ESBWR structures, systems and components (SSCs) are categorized as safety-related (as defined in 10 CFR 50.2) or nonsafety-related. Safety-related SSCs conform to the quality assurance requirements of Appendix B to 10 CFR 50. Nonsafety-related SSCs have quality assurance requirements applied commensurate with the importance of the item's function. The quality assurance program is described in DCD Chapter 17.

The Seismic Category I structures, systems, and components are designed to withstand the appropriate seismic loads (as discussed in Section 3.7) in combination with other appropriate loads without loss of function or pressure integrity. The seismic classifications indicated in Table 3.2-1 are consistent with the guidelines of Regulatory Guide 1.29.

The ESBWR complies with 10 CFR 50, Appendix A, General Design Criterion (GDC) 2, as the safety-related SSCs are designed to withstand the effects of earthquakes without loss of capability to perform their safety-related functions. Specific requirements for seismic design and quality group classifications are identified for these ESBWR items commensurate with their safety classification. DCD Tier 2 Table 3.2-1 identifies these classifications for ESBWR structures, systems and components. DCD Tier 2 Table 3.2-2 lists the minimum safety class requirements.

Structures, systems and components that perform no safety-related function, but whose structural failure or interaction could degrade the functioning of a Seismic Category I item to an unacceptable level of safety or could result in incapacitating injury to occupants of the Main Control Room, are designated Seismic Category II. These items are designed to structurally withstand the effects of an SSE.

Structures, systems, and components that are not categorized as Seismic Category I or II are designated Seismic Category NS. NS (non-seismic) structures and equipment are designed for seismic requirements in accordance with the International Building Code (IBC).

Based on above ESBWR design requirements, the issue associated with the seismically induced fires has been adequately addressed.

22.12.3.5.2 Evaluation of Issue #2 – Degradation of Fire Suppression Systems and Features

After a postulated seismic event, the fire suppression systems and features are going to be degraded (e.g., rupture or unavailability). There is also a potential for common-cause failure of multiple fire suppression systems due to the seismically induced failure of supporting systems.

For ESBWR fire PRA analysis, a bounding approach is taken, which takes no credit for the fire suppression systems and features. Therefore, the effects of seismic-induced degradation of fire suppression systems and features have been addressed in the current fire PRA analysis.

22.12.3.5.3 Evaluation of Issue #3 – Spurious Operation of Suppression and or Detection Systems

Spurious operation during an earthquake could result in potential for flooding relative to water-based fire suppression systems, loss of habitability for gaseous suppression systems, and the potential for diversion of suppressants from areas where they might be needed. The spurious actuation of fire suppression systems has been evaluated in the internal flooding analysis. The potential diversion of suppressants has no impact on the current fire PRA analysis because no credit for fire suppression is taken.

22.12.3.5.4 Evaluation of Issue #4 – Degradation of Manual Fire Fighting Effectiveness

The effectiveness of manual fire fighting will be impacted after an earthquake. However, the degradation has no impact on the current fire PRA analysis because no credit for fire suppression is taken.

22.12.4 Conclusion

All the DCD Revision 5 design changes and the PRA Revision 3 model changes that can potentially impact the fire PRA models have been evaluated. Both qualitative and quantitative evaluations have been performed for the identified changes. None of the identified changes has significant impact on the Revision 2 fire PRA models. The majority of the changes have been implemented to enhance the plant's mitigating capability in a postulated fire scenario.

Based on the evaluations in the above subsections, one new key PRA insight / assumption has been identified:

(1) Control logic cabinets for each wetwell to drywell vacuum breaker isolation valve must be located in separate fire zones.

Table 22.12-1

Sensitivity Results for Turbine Building Fire Area Changes

Fire Scenarios	Baseline CDF (/yr)	Baseline nTSL (/yr)	Sensitivity CDF (/yr)	Sensitivity nTSL (/yr)	Change CDF (/yr)	Change nTSL (/yr)
F4100 / F4197	6.640E-10	5.85E-11	1.041E-09	9.032E-11	3.77E-10	3.18E-11
F4100_F4103	4.456E-12	3.47E-13	None	None	-4.46E-12	-3.47E-13
F4103	2.675E-10	4.36E-12	None	None	-2.67E-10	-4.36E-12
F4103_F4100	2.215E-12	1.75E-13	None	None	-2.21E-12	-1.75E-13
F4307	1.396E-12	7.44E-15	None	None	-1.40E-12	-7.44E-15
Sub-Total	9.396E-10	6.34E-11	1.041E-09	9.032E-11	**1.01E-10**	**2.69E-11**
Rev 2 Baseline Total	8.058E-09	4.834E-10	N/A	N/A	N/A	N/A
% of Rev 2 Baseline Total	11.7%	13.1%	12.9%	18.7%	**1.3%**	**5.6%**

Table 22.12-2

Sensitivity Results for Electrical Building Fire Area Changes

Fire Scenarios	Baseline CDF (/yr)	Baseline nTSL (/yr)	Sensitivity CDF (/yr)	Sensitivity nTSL (/yr)	Change CDF (/yr)	Change nTSL (/yr)
F5154	N/A	N/A	9.892E-11	9.760E-13	9.892E-11	9.760E-13
F5154_F5164	N/A	N/A	1.002E-10	1.228E-11	1.002E-10	1.228E-11
F5164	N/A	N/A	1.259E-10	1.676E-12	1.259E-10	1.676E-12
F5164_F5154	N/A	N/A	1.286E-10	1.586E-11	1.286E-10	1.586E-11
F9150	9.961E-11	1.460E-12	9.892E-11	9.760E-13	-6.850E-13	-4.839E-13
F9150_F9160	1.003E-10	1.267E-11	1.002E-10	1.228E-11	-5.000E-14	-3.851E-13
F9160	2.629E-10	1.455E-10	1.259E-10	1.676E-12	-1.370E-10	-1.438E-10
F9160_F9150	1.286E-10	1.624E-11	1.286E-10	1.586E-11	-2.000E-14	-3.822E-13
Sub-Total	5.913E-10	1.759E-10	9.072E-10	6.158E-11	**3.159E-10**	**-1.143E-10**
Rev 2 Baseline Total	8.058E-09	4.834E-10	N/A	N/A	N/A	N/A
% of Rev 2 Baseline Total	7.3%	36.4%	11.3%	12.7%	**3.9%**	**-23.6%**

Table 22.12-3

Shutdown Fire Sensitivity Results for SF/WT Building Changes

Sensitivity Shutdown (SD) Fire Initiating Event (IE)	Corresponding Baseline SD Fire IE	Baseline SD IE Frequency (/yr)	Sensitivity SD IE Frequency (/yr)	CCDP	Sensitivity SD CDF (/yr)
%F7300a_F7300b_M5	%F7300_M5	1.42E-04	1.05E-06	1.60E-06	1.69E-12
%F7300a_F7300b_M5O	%F7300_M5O	3.56E-05	2.64E-07	1.59E-06	4.18E-13
%F7300a_F7300b_M6U	%F7300_M6U	4.45E-05	3.29E-07	1.62E-04	5.35E-11

Table 22.12-4

Sensitivity Results for VBIV Changes

Fire Scenarios	Baseline CDF (/yr)	Baseline nTSL (/yr)	Sensitivity CDF (/yr)	Sensitivity nTSL (/yr)	Change CDF (/yr)	Change nTSL (/yr)
F1311	9.31E-10	1.16E-11	9.31E-10	1.43E-11	(None)	2.70E-12
F1321	9.22E-10	9.42E-12	9.23E-10	1.22E-11	1.00E-12	2.78E-12
F1331	3.58E-11	1.03E-12	3.59E-11	1.19E-12	1.00E-13	1.60E-13
F1311_F1331	1.48E-11	1.16E-12	1.54E-11	1.77E-12	6.00E-13	6.10E-13
Sub-Total	1.90E-09	2.32E-11	1.91E-09	2.95E-11	**1.70E-12**	**6.25E-12**
Rev 2 Baseline Total	8.058E-09	4.834E-10	N/A	N/A	N/A	N/A
% of Rev 2 Baseline Total	23.6%	4.8%	23.7%	6.1%	**<0.1%**	**1.3%**

22.13 PROBABILISTIC FLOOD ANALYSIS

This subsection evaluates the impact of the DCD Revision 5 design changes and PRA Revision 3 modeling changes have on the ESBWR Probabilistic Flood Analysis.

22.13.1 Overview

The Revision 3 baseline Level 1 and Level 2 PRA models have been updated to reflect design changes and incorporate modeling changes to support DCD Revision 5. As demonstrated in Subsections 22.7 and 22.8, the Revision 3 baseline PRA results have not changed significantly from the previous revision. The PRA insights and conclusions documented in DCD Chapter 19, Revision 5, have not been affected by the Revision 3 design and modeling changes.

Several design changes to the ESBWR have the potential to impact the flood analysis. In addition, the PRA model has been changed based on the Revision 3. Based on a qualitative review of these changes, the overall impact on the ESBWR probabilistic flood analysis is not significant.

22.13.2 ESBWR Design Changes

DCD changes that would impact the flood analysis include the addition of a new building with potential flood sources and the re-location of a second flood source.

An additional building, the Ancillary Diesel Building (ADC), had been added to the ESBWR site. The ADC building houses two ancillary diesel generators, two fuel oil tanks, and two related transformer/switch gear assemblies. A potential flooding scenario associated with the rupture of the fuel oil tanks would exceed a level of 1-foot in the ADC building. However, this ADC flooding scenario would not result in an initiating event. As a result, no PRA impact would be anticipated in association with flooding in the ADC building.

The Chilled Water Storage Tank (CWST) has been re-located from the Control Building to the Service Tunnel. In Revision 2 of the flood model, the CWST was screened from further analysis due to an insufficient volume of water. By relocating this tank to the Service Tunnel, a review of this screening shows that the CWST remains screened from further analysis due to an insufficient volume within the Service Tunnel as well. In addition, the Service Tunnel contains no PRA components and would have no impact of CDF.

22.13.3 PRA Model Changes

While system model changes have been included in Revision 3 of the PRA model, the Revision 3 baseline PRA results have not changed significantly from the previous revision. As a result, no significant impact to the flooding analysis is expected to occur from the Revision 3 changes.

22.13.4 Conclusion

Because the design changes associated with DCD Revision 5 and PRA Revision 3 did not directly impact the flooding analysis, the PRA insights associated with the Revision 2 flooding analysis remain the same. No additional PRA insights or assumptions have been identified.

22.14 HIGH WIND RISK ANALYSIS

This subsection evaluates the impact of the DCD Revision 5 design changes and PRA Revision 3 modeling changes have on the ESBWR High Wind Risk.

22.14.1 Overview

The Revision 3 baseline Level 1 and Level 2 PRA models have been updated to reflect design changes and incorporate modeling changes to support DCD Revision 5. As demonstrated in Subsections 22.7 and 22.8, the Revision 3 baseline PRA results have not changed significantly from the previous revision. The PRA insights and conclusions documented in DCD Chapter 19, Revision 5, have not been affected by the Revision 3 design and modeling changes.

Several design changes to the ESBWR have the potential to impact the high wind risk analysis. In addition, the PRA model has been changed based on the Revision 3. Using a qualitative review of these changes, the overall impact on the ESBWR high wind risk analysis is not significant.

Sensitivity analyses are included in the section to assess beyond design basis extreme wind conditions and the consideration of uncertainties for the robustness of buildings challenged up to their design basis.

22.14.2 ESBWR Design Changes

A review of the DCD Table 2.0-1 was conducted to evaluate changes and/or additions to the seismic classification of systems, structure and components. Several changes were noted, but none of these changes were found to impact the high wind risk analysis.

22.14.3 PRA Model Changes

While system model changes have been included in Revision 3 of the PRA model, the Revision 3 baseline PRA results have not changed significantly from the previous revision. As a result, no significant impact to the high wind risk analysis is expected to occur from these Revision 3 changes.

22.14.4 High Wind Sensitivities

Sensitivities were conducted on the high winds risk analysis to evaluate the impact of damage to site structures otherwise designed to withstand these extreme wind and tornado conditions.

ESBWR structures/components classified as Seismic Category I and II are designed to withstand extreme winds to 150 mph. According to the Saffir-Simpson scale, the extreme wind conditions for Category 5 hurricanes are greater than 155 mph. Although, the ESBWR Seismic Category I and II structures are also designed to withstand and tornado winds to 330 mph, a sensitivity on the hurricane high wind analysis assuming some site damage occurs was conducted.

Portions of the Fire Protection System (FPS) are classified as Seismic Category II including the motor-driven fire pumps. A sensitivity was performed using the failure of the Seismic Category II FPS components in addition to the failure of the other site components and structures already considered based on the ESBWR design basis. Using the Revision 2 high wind risk model, the results for the sensitivity are shown below. The sensitivities were performed with the FPS

components failed for only Category 5 hurricane events in Case 1 and with the FPS components failed for Category 3, 4 and 5 hurricanes. Results from the hurricane sensitivities show that very little impact to CDF results from the failure of all of the Seismic Category II FPS components. Because of the bounding nature of the hurricane data, similar impact to CDF is expected from the random failure of other Seismic Category II site systems/components.

HURRICANE SENSITIVITY

		Frequency	CDF	Change in CDF
Base Model - Rev. 2				
	Hurricane - Cat 345	1.52E-02	1.29E-09	
	TOTAL Hurricane		1.29E-09	---
Case 1 - w/ Cat. 5 damage				
	Hurricane - Cat 34	1.47E-02	1.25E-09	
	Hurricane - Cat 5 w/ FPS failure	4.96E-04	4.11E-11	
	TOTAL Hurricane		1.29E-09	8.44E-13
Case 2 - w/ Cat. 345 damage				
	Hurricane - Cat 345 w/ FPS failure	1.52E-02	1.30E-09	
	TOTAL Hurricane		1.30E-09	1.10E-11

A sensitivity was performed on the tornado analysis failing the same portions of the FPS classified as Seismic Category II. The results for the tornado sensitivity are shown below. The sensitivities were performed with the FPS components failed for only tornado events classified as Enhanced Fujita (EF) scale 4 and 5 tornados in Case 1. Results from the tornado sensitivity show no impact to CDF results from the failure of all of the Seismic Category II FPS components. Because of the bounding nature of the hurricane data, similar impact to CDF is expected from the random failure of other Seismic Category II site systems/components.

TORNADO SENSITIVITY

		Frequency	CDF	Change in CDF
Base Model - Rev. 2				
	Tornado - EF2/3	7.01E-06	4.64E-13	
	Tornado - EF4/5	3.81E-07	4.83E-11	
	TOTAL Tornado		4.88E-11	---
Case 1 - w/ EF4/5 damage				
	Tornado - EF2/3	7.01E-06	4.64E-13	
	Tornado - EF4/5 w/ FPS failure	3.81E-07	4.83E-11	
	TOTAL Tornado		4.88E-11	0.00E+00

22.14.5 Conclusions

Because the design changes associated with DCD Revision 5 and PRA Revision 3 did not directly impact the high wind analysis, the PRA insights associated with Revision 2 high wind analysis remain the same. Hurricanes remain the most risk significant component in the high winds risk analysis. In addition, sensitivities discussed in 22.14.4 indicate that assumptions used for the hurricane analysis are bounding. No additional PRA insights or assumptions have been identified.

22.15 SEISMIC MARGINS ANALYSIS

22.15.1 Overview

There is no change to the Seismic Margins Analysis methodology or assumptions; therefore there are no changes to this section. Any changes other than methodology or assumptions require as-built information that is not yet available.

22.15.2 Conclusion

No changes were made to the Seismic Margins Analysis section.

22.16 SHUTDOWN RISK

This subsection evaluates the impact of the DCD Revision 5 design changes and PRA Revision 3 modeling changes have on the ESBWR Shutdown Risk.

22.16.1 Overview

The Revision 3 internal events baseline Level 1 and Level 2 PRA models have been updated to reflect design changes and incorporate modeling changes to support DCD Revision 5. As demonstrated in Subsections 22.7 and 22.8, the Revision 3 baseline PRA results have not changed significantly from the previous revision. The PRA insights and conclusions documented in DCD Chapter 19, Revision 5, have not been affected by the Revision 3 design and modeling changes.

A complete shutdown PRA revision has not been completed. There have been design changes and development for DCD Revision 5 that affect the shutdown PRA model. These changes have been explained in detail throughout the system documentation and other earlier subsections of Section 22. The sections below in 22.16 provide a qualitative evaluation of the impact the Revision 3 model changes have on the shutdown risk. Additionally, a series of quantitative sensitivities are included examine the impact on shutdown risk associated with some changes associated with updated design and PRA modeling enhancements.

22.16.2 System Design and PRA Model Changes

22.16.2.1 Shutdown Initiating Events

There are no new shutdown initiating events identified for Revision 3. The events modeled and the initiating event frequencies applied to the Revision 2 model are all still applicable to the shutdown analysis.

Updated system drawings show that initiating event for the Instrument Line LOCA has likely been significantly reduced. All piping segments off the lower vessel and RWCU/SDC lines that were used to calculate the initiating event frequency have been moved. All the piping is now downstream of the system isolation valves. Now an initiating event from a line break would be automatically isolated. This change would either reduce the initiating event frequency, or add the isolation function as a mitigating feature to any accident sequence analysis. This change has not been accounted for in the shutdown analysis, or in the initiating event analysis (Section 22.2). The current treatment of the lines in the PRA model is conservative.

22.16.2.2 Modeled System Changes

Details of the changes made to the individual system models credited in the shutdown PRA are included in the previous subsections of Section 22.4. Table 22.16-1 lists the systems credited in the shutdown PRA. The table also summarizes the conclusions from the 22.4 sections for each system with respect to model changes and the risk impact of those changes. For more detailed analysis of the individual system changes, refer to the associated sections from 22.4.

Table 22.16-1

System Model Change Summary

System	NEDO Section	Scope of change/risk impact
ICS	22.4.2	Minor system changes, negligible risk impact
CRD	22.4.3	Minor changes, Slight risk/reliability improvement
FAPCS	22.4.7	Minor changes, negligible risk impact*
FPS	22.4.16	Significant system changes, negligible risk impact
RWCU/SDC	22.4.8	No changes
GDCS	22.4.6	Minor changes, negligible risk impact*
DPV/SRV	22.4.1	No changes
AC Power	22.4.14	Addition of Ancillary Diesels, slight risk improvement

* GDCS and FAPCS are now linked due to equalization being required for Suppression Pool Cooling (SPC). This has caused an increase in the risk significance of GDCS. This change has essentially no impact on shutdown since the FAPCS function of SPC is not credited.

22.16.2.3 Success Criteria & Accident Sequence Changes

22.16.2.3.1 Technical Specifications - Depressurization in Mode 5

Manual and Automatic Depressurization was credited for almost all Mode 5 sequences in the Revision 2 shutdown PRA model. It was assumed that until the reactor head was removed (the start of Mode 6), all 8 DPVs would be operable. The modeled success criterion for automatic depressurization was successful opening of any 4 out of 8 DPVs. This assumption had no documented basis since the Technical Specifications did not require DPV operability beyond Mode 4.

Concerns about shutdown modeling, specifically the lack of Tech Spec treatment for ADS in Mode 5, led to a revision of Tech Specs. The Tech Spec basis for GDCS in Mode 5 now requires 6 out of the 8 DPVs to be operable until the reactor head is removed. A sensitivity analysis is provided below to show the impact the more restrictive success criteria has on the shutdown results.

22.16.2.3.2 ICS Function With Elevated Water Level

Many current operating plants raise the water level in the vessel prior to vessel head removal during shutdown. This is done to reduce the dose associated with removal of the reactor head and other refueling activities. For the ESBWR, this evolution disables ICS as flooding the vessel above the ICS inlets will disable the system.

ICS is credited in all non-LOCA Mode 5 sequences. The system is one of only two passive safety systems operable during shutdown. Not having ICS available for a period of Mode 5 could significantly impact the shutdown risk results. The relatively low risk numbers associated with shutdown are primarily the result of ICS and GDCS. The other credited systems all require manual action and have much higher failure rates.

Flooding the vessel above the ICS inlet is not permitted during Mode 5. Technical Specifications require two ICS loops remain operable throughout the Mode (DCD Chapter 16, Tech Spec 3.5.5). In order to meet the Tech Specs, the reactor water level must remain below the ICS inlets until the vessel head closure bolts are de-tensioned (the start of Mode 6). The Revision 2 treatment of ICS in Mode 5 is accurate as modeled.

22.16.3 Results

The only significant change to the Revision 3 shutdown analysis is the change in ADS success criteria. The following sensitivity analysis shows the impact the change has on the shutdown results. The cases below were completed in support of the evaluation to ensure ADS function is included in Tech Specs for Mode 5. The shutdown PRA was quantified with a varying number of DPVs available.

The at power success criteria for ADS is any 4 of 8 DPVs successfully opening. The same success is assumed necessary for Mode 5. All 8 DPV valves were assumed available in the Revision 2 shutdown model. The following sensitivity cases were completed to show the impact on the shutdown results. The only variation in the cases is how many and which ADS valves are available.

1) Revision 2 base case – Assumes all 8 DPV valves operable, 4 out of 8 success criteria.
2) Only 4 DPVs available, success criteria is 4 out of 4 (valves A, B, C, D set to True)
3) Only 4 DPVs available, success criteria is 4 out of 4 (valves E, F, G, H set to True)
4) 6 out of 8 DPVs available, success criteria is 4 out of 6 (valves A & B set to True)
5) 6 out of 8 DPVs available, success criteria is 4 out of 6 (valves E & F set to True)

Cases 3 and 5 are done to ensure model symmetry and consistent treatment of the entire DPV valve group.

For all cases flag files were used to adjust the model treatment for the ADS valves. For example, if fault tree gate B21-F004E-AUTO is set to TRUE in a flag file, this sets DPV valve F004E to TRUE or failed for any case using that flag setting. The table below shows the results for the 5 cases listed above.

Table 22.16-1

ADS Sensitivity Results

Case	DPVs set to TRUE	Shutdown CDF
1	None	9.37E-09
2	F004A, F004B, F004C, F004D	1.04E-08
3	F004E, F004F, F004G, F004H	1.04E-08
4	F004A, F004B	9.37E-09
5	F004E, F004F	9.37E-09

The results show that the available number of DPVs does impact the results. Having only the minimum number of valves required to meet the success criteria results in a risk increase of about 12%. The cases with 6 ADS valves available show no notable increase in the results compared to the Revision 2 baseline case. The cutsets for cases 1, 4, and 5 are nearly identical. The top 200 cutsets are the same for all three cases. There is some variation in the results, but the difference between the base Revision 2 case and the cases 4 and 5 is 6.0E-13.

There is variation in results and cutsets between cases 2 and 3 and the other three runs. Any single DPV failure results in loss of ADS function for these most limiting cases. All the remaining cases are single failure proof, and generally only CCF failures show up in the cutsets.

The above results assisted in development of the Tech Spec update to ensure ADS availability during shutdown. With requirements to ensure 6 operable DPVs until the vessel head is removed, there is a negligible change in shutdown CDF for Revision 3.

22.16.4 Conclusion

There is a negligible change to the shutdown risk between the Revision 2 and Revision 3 ESBWR PRA models. The comparison of the Revision 2 and Revision 3 At-Power Internal Events PRA model results in section 22.7 shows the two models yield nearly identical results for CDF. The reason the quantitative results are also negligible for shutdown include:

- The systems credited in the shutdown model have, for the most part, had either no or minor model changes.
- The only system with a notable significant design change was FPS, and the quantitative results for that system did not change
- The Revision 2 model also credited ADS function in Mode 5 even though Tech Specs did not explicitly require it. Tech Specs have been updated to require ADS availability. Sensitivity analyses show results between the Revision 2 success criteria and the updated Tech Spec requirements are nearly identical.

The PRA insights and conclusions documented in DCD Chapter 19, Revision 2, have not been affected by the Revision 3 design and modeling changes with respect to the internal events shutdown PRA analysis. No additional PRA insights or assumptions have been identified.

22.17 RESULTS SUMMARY

22.17.1 Overview of Results and Insights

The PRA results encompass the entire quantified risk profile, which includes internal and external events (seismic events are treated separately in a margins analysis), severe accident progression analysis, and offsite consequence analysis for at-power and shutdown operating conditions.

External events were not changed in this revision; therefore, no discussion is included regarding them.

All changes have been specifically documented in subsections of Section 22. The purpose of this subsection is to summarize the results with the updated PRA model and to evaluate any significant changes and their effect, if any, on the overall PRA insights and conclusions.

22.17.2 At-Power Internal Events

Changes in plant design and modeling changes combined to result in a negligible change in both CDF and LRF values. The following sections summarize the changes.

22.17.2.1 Significant Core Damage Sequences – At Power Internal Events

The CDF for at-power internal events is 1.22 E-8/year. The top ten at-power internal event sequences are described below, on a functional level. This distillation of the PRA accident sequences is the important insights that represent the behavior of the ESBWR design in response to postulated accidents.

(1) T-IORV063

Inadvertent Opening of a Relief Valve

Scram is successful

High Pressure Injection fails

Depressurization is successful

Low Pressure Injection fails

(2) AT-T-GEN023

General Transient with ATWS

Scram fails

SLCS fails

(3) T-FDW050

Loss of Feedwater

Scram is successful

Isolation Condensers fail

Depressurization is successful

Low Pressure Injection fails

(4) AT-T-GEN026*

General Transient with ATWS

Scram fails

Feedwater pump runback fails

(5) T-IORV017

Inadvertent Opening of a Relief Valve

Scram is successful

High Pressure Injection fails

Depressurization is successful

Low Pressure Injection fails

(6) AT-T-GEN021

General Transient with ATWS

Scram fails

One or more SRVs sticks open

Failure to maintain RPV water level

(7) T-IORV065

Inadvertent Opening of a Relief Valve

Scram is successful

High Pressure Injection fails

Depressurization fails

(8) AT-T-LOPP013

Loss of Preferred Power with ATWS

Scram fails

One or more SRVs stick open

Failure to maintain level

(9) LL-S-FWB045

Line Break in Feedwater Line B

Scram is successful

LOCA depressurizes RPV – fails Feedwater

Low Pressure Injection fails

(10) T-LOPP050

Loss of Preferred Power

Scram is successful

Isolation Condensers fail

Depressurization is successful

Low Pressure Injection fails

*Added to list in Section 22.7

Removed from list in Section 22.7

(11) T-IORV018

Inadvertent Opening of a Relief Valve

Scram is successful

High Pressure Injection fails

Active Low Pressure Injection fails

Depressurization fails

These result changes are introduced mainly by the following model changes in Revision 3:

(1) The Section 22 master mutually exclusive cutset file adds a new mutually exclusive cutset for accident sequence T-IORV018 (described in subsection 22.7.1). This change renders more accurate quantification results in Revision 3, which reduced the CDF contribution from sequence T-IORV018 by about 5.4%. This covers almost all the reduction in CDF contribution for %T-IORV.

(2) The Section 22 DPS system model updated the load driver modeling (described in Table 22.7-1). This change results in relatively significant CDF contribution increase (about 5.2% of total CDF) for ATWS sequence AT-T-GEN026, in which the failure of feedwater runback function directly leads to core damage. Because initiating event %T-GEN probability is much higher than other initiating events in the T-GEN and AT-T-GEN sequences, the majority of the AT-T-GEN026 CDF contribution increase is associated with %T-GEN.

22.17.2.2 Significant Functions, SSCs, and Operator Actions – At-Power Internal Events

The list the significant components for at-power internal events is now contained in NEDO-33411.

A sensitivity study in Section 22.11 evaluates the risk importance values on a system level, with the following results:

Systems With F-V > 0.1

E50	Gravity Driven Cooling System
B21	Automatic Depressurization System
C12	Control Rod Drive System
C63	Safety-Related Distributed Control and Instrumentation
G21	Fuel & Auxiliary Pool Cooling System
R21	Standby On Site AC Power Supply
C41	Standby Liquid Control System

The following systems were removed from this list as a result of Section 22 Requantification and Sensitivity Study:

N21	Condensate & Feedwater System
C71	Reactor Protection System

There were no changes in the listed systems contained in Systems With RAW > 50 as a result of Revision 3 Requantification and Sensitivity Study:

22.17.2.3 Large Release Sequences –At Power Internal Events

The at-power internal events large release frequency (LRF) is 9.62 E-10/year.

22.17.2.4 Significant Large Release Sequences –At Power Internal Events

Overall, the direction of change was from larger source term categories to release categories with smaller source terms.

22.17.2.5 Significant Large Release - At-Power Internal Initiating Events

The primary contributor to non-TSL release, large LOCA in feedwater line B (%LL-S-FDWB), did not change significantly from Revision 2 to Revision 3. However, the number two and three contributors have changed.

In Revision 2 the second highest contributor was medium LOCA (%ML-L), which has been reduced because of the improved reliability in steam suppression (see Section 22.4.18); a medium LOCA plus failure of steam suppression leads to a class V core damage state. The third highest contributor was break outside containment in RWCU/SDC (%BOC-RWCU), which has been reduced because of increased reliability in RWCU/SDC isolation (see Section 22.4.18).

The main difference in Section 22 initiating event distribution (besides the reductions listed above) is the increased contribution from loss of preferred power. Grid-related loss of preferred power (%T-LOPP-GR) has increased from 1% to 5% of non-TSL release; switchyard centered (%T-LOPP-SC) and weather-related (%T-LOPP-WR) loss of preferred power have appeared as minor contributors. The increased LOPP contribution is expected because of the explicitly modeled ancillary diesel generator (ADG) support to the nonsafety-related uninterruptible power

supply during station blackout (SBO) (see Section 22.4.14, 22.4.15, and 22.4.17). Revision 2 assumed that the nonsafety-related UPS, which supports N-DCIS and DPS, would have power for 72 hours during SBO despite the fact that the nonsafety-related batteries last for only two hours.

22.17.2.6 Significant Large Release Functions, SSCs, and Operator Actions –At-Power Internal Events

No significant changes resulted from Section 22.

22.17.2.7 Containment Performance – At-Power Internal Events

The potential for containment failure due to combustible gas generation, containment bypass and overpressurization was evaluated. In addition, the frequency of containment failure events due to the phenomenological events discussed in Section 21 (CCIW, CCID, DCH, EVE) was determined. Because of the ESBWR design and reliability of containment systems, the most likely containment response to a severe accident is associated with successful containment isolation, vapor suppression and containment heat removal. As a result, the containment provides a highly reliable barrier to the release of fission products after a severe accident, with the dominant release category being that defined by Technical Specification leakage (TSL).

A containment penetration screening evaluation indicated that there are only a few penetrations that required isolation to prevent significant offsite consequences. All potential leakage paths feature multiple containment isolation valves. Thus, the probability of the bypass failure mode is dominated by common cause hardware failures, resulting in a calculated frequency of containment bypass about three orders of magnitude lower than the TSL release category.

The conditional containment failure probability is 7.9%, which meets the recommended goal of less than 10%.

22.17.2.8 Significant Offsite Consequences – At-Power Internal Events

The results show that the calculated offsite consequence risk is negligibly affected by the design and modeling changes implemented since Revision 2 of the PRA.

22.17.2.9 Summary of Important Results and Insights – At-Power Internal Events

The Section 22 Level 1 At-Power Internal Events PRA model has been updated to reflect design changes and incorporate modeling changes to support DCD Revision 5. The Section 22 baseline Level 1 PRA results have not changed significantly from the previous revision. The notable changes in CDF contributions with respect to initiating events, accident sequences, and top cutsets reflect both DCD Revision 5 system design changes and the PRA model changes. The notable changes in CDF contributions with respect to accident classes and subclasses with respect to lower drywell (LDW) water level are relatively more important, which are introduced by the PRA model enhancement in the Revision 3 event tree development and have no impact on the total CDF. Overall, the net effect of these notable changes results in negligible change in the total CDF.

22.17.3 At-Power External Events

External events were not requantified in Section 22; therefore, changes in risks due to external events initiated by fire, flood, and high winds are limited to qualitative considerations.

22.17.4 Shutdown Internal Events

22.17.4.1 Significant Core Damage Sequences – Shutdown Internal Events

The shutdown internal events model was not requantified for Section 22; therefore, only qualitative insights can be made.

22.17.4.2 Initiating Events – Shutdown Internal Events

There are no new shutdown initiating events identified for Section 22. The events modeled and the initiating event frequencies applied to the Revision 2 model are all still applicable to the shutdown analysis.

22.17.4.3 Results – Shutdown

The only significant change to the Section 22 shutdown analysis is the change in ADS success criteria.

22.17.5 Shutdown External Events

External events were not requantified in Section 22; therefore, changes in risks due to external events initiated by fire, flood, and high winds are limited to qualitative considerations.

22.17.6 Insights from Seismic Margins Analysis

The Seismic Margins Analysis is unchanged by this revision; therefore, there are no changes.

22.17.7 Summary of Important Results and Insights

Table 22.17.1-1 lists the CDF and LRF values for the quantified risk condition in Section 22 of the ESBWR PRA. It is important to restate that because the individual CDF values are developed with differing levels of conservatism, it is not meaningful to add CDF or LRF values to create total values.

Table 22.17.1-1

Results

Internal Events	Revision 2	Revision 3
At-Power CDF	1.22E-08	1.21E-08
At-Power LRF	9.62E-10	8.99E-10

22.18 PRA INSIGHTS AFFECTING ESBWR DESIGN

A systematic approach was used to define insights and assumptions, identify and evaluate their significance, and ensure that they are understood and preserved throughout the design phase of the ESBWR. The resulting PRA key insights and assumptions are documented in Table 22.18-1.

22.18.1 Conclusion

Section 22 has been updated to reflect design changes and incorporate modeling changes to support DCD Revision 5. The Section 22.7 and 22.8 baseline PRA results have not changed significantly from the previous revision and, as such, design features that contribute to the low core damage frequency and balanced risk profile of the ESBWR remain as well.

Table 22.18-1

Risk Insights and Assumptions

Insight or Assumption	Disposition
The containment provides a highly reliable barrier to the release of fission products after a severe accident, with the dominant release category being that defined by nominal allowed leakage. The ESBWR is designed to minimize the effects of pressurization due to direct containment heating (suppression pool – DCD Tier 2 6.2.1.1), ex-vessel steam explosions (GDCS pool gutter – DCD Tier 2 6.2.1.1.10.2), and core-concrete interaction (BiMAC – DCD Tier 2 19.3.2.6). The ESBWR containment is designed to a higher ultimate pressure than previous BWR containment designs.	Insight
The Level 3 results indicate that the offsite consequences due to internal at-power events are negligible. The results, including sensitivity studies, demonstrate that the estimated offsite consequences are less than the defined individual, societal, and radiation dose limits by several orders of magnitude.	Insight
The ESBWR incorporates redundancy and diversity in its design principles, and has used PRA insights during development to identify potential risks and to address them in the design phase. As such, the risks of core damage and offsite radiological consequences are very low. In addition, the risk profile is balanced such that there are no individual component failures or operator errors that contribute a proportionally significant risk. The relative risk significance of individual risk contributions from ESBWR SSCs and operator actions are very low, and are on the same order of magnitude, in some cases, of events that were previously excluded in LWR PRAs.	Insight
The design of the ESBWR reduces the possibility of a LOCA outside the containment by designing to the extent practical all piping systems, major system components (pumps and valves), and subsystems connected to the reactor coolant pressure boundary (RCPB) to an ultimate rupture strength at least equal to the full RCPB pressure.	Insight

Table 22.18-1

Risk Insights and Assumptions

Insight or Assumption	Disposition
Sensitivity study results indicate that changes in test and maintenance unavailability do not significantly impact the CDF or insights.	Insight
LOCA frequencies. For each pipe group, the number of lines, the number of sections (assessed on the basis of layout drawings), the frequency apportionments, and the final averaged frequencies. These data are binned into the LOCA initiator classes, as summarized in Section 2, Table 2.3-2. Sensitivity study results indicate that changes in the LOCA frequencies have the potential to impact CDF, but still maintain significant margin below the NRC safety goal guidelines.	Operational Program – Site Baseline PRA
Sensitivity study results indicate that changes in the human error failure probabilities, particularly pre-initiators, have the potential to impact CDF, but still maintain significant margin below the NRC safety goal guidelines.	Operational Program – Human Factors Engineering
Sensitivity study results indicate that squib valve failure rate estimates have the potential to impact CDF, but still maintain significant margin below the NRC safety goal guidelines.	Operational Program – Maintenance Rule
If automatic isolation fails to isolate an RWCU/SDC line break outside of containment, manual action to isolate the line is modeled in sequences that allow successful low pressure injection.	Operational Program – Procedure Development
If the containment is breached or is vented, GDCS injection fails to be sustained in long term sequences because condensate make-up to GDCS from PCCS is not available. An external injection source must be available in these sequences to ensure adequate core cooling.	Operational Program – Procedure Development

Table 22.18-1

Risk Insights and Assumptions

Insight or Assumption	Disposition
The design certification PRA uses conservative assumptions in the treatment of ATWS conditions. The following failures are assumed to lead directly to core damage: Feedwater runback ADS Inhibit Level control using Feedwater or CRD injection SLC The Site Baseline PRA will be refined to reflect operating procedures that will be developed to address the response to ATWS conditions in more detail.	Operational Program – Site Baseline PRA
Q-DCIS and N-DCIS are designed to high standards for reliability, including very reliable hardware and high quality software. The most dominant failure modes reside in the uncertainty in the treatment of software faults, including common cause software failures that either cause demanded actions to fail, or cause spurious actions.	Operational Program – Site Baseline PRA
GDCS faults are dominated by common cause failures of the check valves or the squib valves in the injection and equalize lines.	Operational Program – Maintenance Rule
CRD injection is assumed to be functional following a containment overpressurization failure due to the separation between the dominant containment failure locations (DCD a19C)and the location of CRD pumps and lines. This is an important assumption, based on the containment failure analysis, that supports the use of CRD in these sequences.	Operational Program – Site Baseline PRA

Table 22.18-1

Risk Insights and Assumptions

Insight or Assumption	Disposition
The following operator actions have the highest risk importance: Fail to recognize the need to depressurize Fail to recognize the need for IC/PCCS pool makeup Fail to recognize the need for makeup after depressurization Fail to restart feedwater pump after a feedwater runback These operator actions are based on conservative modeling methods and none are considered to be dominant contributors to CDF or LRF.	Operational Program – Human Factors Engineering
FAPCS and FPS injection capability provide adequate core cooling for transients given successful DPV or ADS valve operation, even if containment pressure is at the ultimate containment pressure.	Design Requirement (DCD Tier 2 Subsection 9.1.3.2)
The DPS cabinet is assumed to be located in a separate fire area in the control building. A preliminary fire PRA analysis model with DPS cabinet located inside room 3301 shows that the fire risk in fire area F3301 would be the dominant contributor to all fire risks due to the high failure probability of common cause failure of software for the safety –related system, the failure of DPS, and multiple nonsafety-related systems impacted by a fire in room 3301. With a separate fire area for the proposed DPS cabinet in the detailed design, the fire risk can be significantly reduced.	Design Requirement (DCD Tier 2 Section 1.0, F1.2-4)
The exposure of the distributed control and information system (Q-DCIS and N-DCIS) equipment to heat and smoke caused by a fire in a single fire area does not cause spurious actuations that could adversely affect safe shutdown.	Design Requirement (DCD Tier 2 Subsection 9.5.1.12)

Table 22.18-1

Risk Insights and Assumptions

Insight or Assumption	Disposition
The communication links between the main control room (MCR) and the Q-DCIS and N-DCIS rooms do not include any copper or other wire conductors that could potentially cause fire-induced spurious actuations that could adversely affect safe shutdown.	Design Requirement (DCD Tier 2 Subsection 9.5.1.12)
It is assumed that the doors that connect the Control and Reactor Buildings with the Electrical Building galleries are watertight, for flooding of the galleries up to the ground level elevation.	Design Requirement (DCD Tier 2 Subsection 3.4.1.4.3)
The Drywell Floor Drain Sump channels, which allow leakage on the lower drywell floor to flow into the sump, will prevent any molten debris, which reaches the inlet, from entering the sump.	Design Requirement (DCD Tier 2 Subsection 6.2.1.1.10.2)
Closure of both the equipment hatch and the personnel hatch can be performed from outside the lower drywell/containment.	Design Requirement (DCD Tier 2 Section 1.0, F1.2-2)
The high reliability of the leakage detection and isolation systems and RPV level instrumentation provide the basis for the screening of (1) shutdown LOCAs outside containment and (2) operator-induced losses of reactor vessel inventory during shutdown.	Design Requirement (DCD, Tier 2 Section 5.2.5)
The IC/PCCS Pool valves that provide make-up water from the equipment storage pool are powered from a reliable source of power, which is capable of long-term support.	Design Requirement (DCD Tier 2 Subsection 5.4.6.2.2)
Control logic cabinets for each of the containment vacuum breaker isolation valves must be located in separate fire zones.	Design Requirement (DCD Tier 2 Subsection 6.2.1.1.2)

Table 22.18-1

Risk Insights and Assumptions

Insight or Assumption	Disposition
Because of the high consequence of a RWCU/SDC line break outside containment this system is designed with an additional diverse, nonsafety-related valve that is used for line isolation. This valve is controlled by the nonsafety-related DCIS system and closes on the same signals that provide the safety-related isolation.	Design Requirement (DCD Tier 2 Subsection 5.4.8.1.2)
Power operated equipment and valves on lines attached to the RPV that require maintenance have maintenance valves installed such that freeze seals will not be required.	Design Requirement (DCD Tier 2 Subsection 5.2.3.1.1)
Separate common cause failure groups are assumed in the PRA model for safety-related versus nonsafety-related batteries and inverters.	Design Requirement (DCD Tier 2 Subsection 7.1.1)
A pneumatic accumulator and check valve are required to support the remote-manual and ADS-activated functions of the valve. The accumulator and check valve ensures that the valve opens via the pneumatic operator following a failure of the pneumatic pressure source.	Design Requirement (DCD Tier 2 Subsection 5.2.2.2.2)
The ATWS sequences experience core damage at high pressure because ADS is inhibited as part of the core damage mitigation effort. However, it is assumed that Emergency Operating Procedures (EOPs) will instruct the operator to depressurize after core damage has occurred in an attempt to preserve containment. It is shown in Appendix 8A that the frequency of ATWS sequences experiencing RPV rupture at high pressure is negligible, so only failures at low pressure were analyzed.	Operational Program – Procedure Development
Venting is assumed to occur when the containment pressure reaches 90% of the ultimate containment strength.	Operational Program – Procedure Development

Table 22.18-1

Risk Insights and Assumptions

Insight or Assumption	Disposition
During shutdown conditions, a continuous fire watch is required for the following scenarios with breached fire barriers for maintenance activities: The breaching of the fire door between fire areas F1152 and F1162 (the reactor building fire areas that house RWCU pumps). The simultaneously breaching of the multiple fire barriers that can open fire areas F3301 and F3302 (the N-DCIS room fire areas) to fire area F3100 (the corridor fire area) at the same time. Shutdown fire risks related to the fire barriers are evaluated and managed in accordance with the outage risk management program of 10CFR50.65(a)(4).	Operational Program – Maintenance Rule
All LOCAs below TAF during shutdown require closure of lower drywell hatch. The hatch can be opened during shutdown. If a break occurs in the lower drywell and the hatch is not closed, core damage is assumed to occur (once the water level reaches the bottom of the hatch, it is assumed that the door can not be closed and the leak not isolated).	Operational Program – Procedure Development
An important recovery action during shutdown is to recover at least one train after loss of both operating RWCU/SDCS trains. This is the primary method of residual heat removal. In the limiting case of loss of cooling, there are approximately 4 hours before boiling would occur. Therefore, there is ample time to restore RWCU/SDC or its supporting systems, such as Service Water or Reactor Component Cooling Water.	Operational Program – Procedure Development

Table 22.18-1

Risk Insights and Assumptions

Insight or Assumption	Disposition
During Mode 5, while preparing to remove the RPV head, RPV water level is raised to provide additional shielding for the personnel removing the head bolts. In BWRs, level is raised to approximately the level of the flange to maximize shielding. In the ESBWR, with its additional RPV height to accommodate the chimney, water level could be raised to a point below the vessel flange to achieve equivalent shielding protection for the workers. In addition, if water level is raised to below the ICS inlet lines, ICS can still be used to remove decay heat, in the event that shutdown cooling is lost during this time period. The duration of this configuration is estimated to be small, around 12 hours, so the overall risk contribution is small.	Operational Program – Procedure Development
The plant should not be in a Mode 6 Unflooded condition when a hurricane strike occurs. This is because in Mode 6 Unflooded the containment is open, the reactor vessel is open and the water above the core will not keep the core cool for an extended period of time.	Operational Program – Procedure Development
The dominant risk contributor with respect to shutdown modes is "Mode 6 Unflooded." This is consistent with the baseline shutdown CDF results since the isolation condenser system is not credited in the Mode 6 Unflooded event trees. Therefore, it is necessary to ensure the operability of the systems critical to decay heat removal function during this mode.	Operational Program – Maintenance Rule
It is assumed that the watertight doors are normally closed at power. Opening of the doors would generate an alarm in the Control Room, and procedures direct their immediate closure upon receipt of an alarm.	Operational Program – Human Factors Engineering (alarm), Procedure Development (response)

Table 22.18-1

Risk Insights and Assumptions

Insight or Assumption	Disposition
It is assumed that, during shutdown, manual and automatic depressurization (ADS) of the vessel are available while the vessel head is in place.	Operational Program - Technical Specification LCO 3.5.3
It is assumed that the actuation of the GDCS due to an RPV Level 1 water level signal is available during the entire shutdown period.	Operational Program - Technical Specification LCO 3.5.3
Procedures have provisions to prohibit coincident removal of the control rod and CRD of the same assembly.	Operational Program – Procedure Development
Contingency procedures provide core and spent fuel cooling mitigative actions during FMCRD replacement with fuel in the vessel.	Operational Program – Procedure Development
During shutdown conditions, in preparation for refueling, both trains of RWCU/SDC are functional while the unit is in either Mode 5 or Mode 6 until the reactor cavity is flooded. While one train may be removed from service when decay heat levels dictate, it is advantageous to maintain that train as functional for backup capability.	Operational Program – Procedure Development
The outage planning and control program is consistent with NUMARC 91-06.	Operational Program – Procedure Development
The FAPCS vessel injection manual isolation valve is a locked-open valve. While its open position is assured by administrative controls, it is an important valve whose failure to remain open could disable two active low pressure injection functions: FAPCS and FPS through FAPCS.	Operational Program – Human Factors Engineering

Table 22.18-1

Risk Insights and Assumptions

Insight or Assumption	Disposition
The PCCS pool drain line maintenance valves are locked-closed manual valves with position indication in the Main Control Room.	Operational Program – Human Factors Engineering

22.19 RELIABILITY AND MAINTAINABILITY

22.19.1 Overview

The objective of the Reliability Assurance Program is to ensure assumptions made in the Probabilistic Risk Assessment during the design phase, regarding component reliability and availability, are maintained valid throughout the life of the plant. The program is discussed in DCD Tier 2 Section 17.4.

In accordance with the objective of the program this section provides an example of the scope and frequency of on-going testing and maintenance activities expected to be performed on RTNSS equipment to achieve the objective discussed above. Specifics cannot be known until manufacturer and model information becomes available; therefore, this is provided for information only.

22.19.2 Conclusion

Section 22 has been updated to reflect design changes and incorporate modeling changes to support DCD Revision 5. These changes have been explained in detail throughout the system documentation in other subsections of Section 22. Since this section is an example and the above-mentioned restraints to specificity remain, no changes have been made as a result of this revision.

The PRA insights and conclusions documented in DCD Chapter 19, Revision 2, have not been affected by the Section 22 design and modeling changes and thus remain valid. No additional PRA insights or assumptions have been identified.

22.20 REGULATORY TREATMENT OF NON SAFETY SYSTEMS

Several changes to DCD Revision 5 provide additional design detail that affects RTNSS equipment. The complete analysis for RTNSS is described in DCD Appendix 19A, and it reflects DCD Revision 5. The Table 22.20-1 is a cross-reference that identifies the changes in RTNSS classifications between DCD Revisions 4 and 5. Figures 22.20-1, 2, and 3 have been revised from Section 20 to reflect changes in the dependencies between RTNSS functions.

Table 22.20-1

Changes to RTNSS Classification Between DCD Revisions 4 and 5

System	Description	DCD R4 Criterion	DCD R5 Changes	DCD R5 Criterion
ARI	Automatically depressurize scram header on ATWS signal	A	DPS – ARI Actuation	A
BiMAC	Provide core debris cooling in LDW through deluge valves	C	Reclassified as RTNSS D – Containment Performance	D
CB HVAC	Provide post 72-hour cooling for DCIS and Control Room habitability	B2	Not RTNSS - Not needed for Q-DCIS Cooling	N/A
Chilled Water System	Provide post 72-hour cooling for HVAC Provide cooling support for FAPCS	B2 C	Nuclear Island Chilled Water subsystem supports FAPCS	C
Control Room Area Ventilation	Portable Generator for post 72-hour ventilation	B1	Replaced with Ancillary AC Diesel Generator, which powers Q-DCIS after 72 hours	B
Diesel Fire Pump	Provide post 72-hour refill to PC/ICC and Spent Fuel pools	B1	No Change	B
Standby Diesel Generators	Provide power for post accident monitoring Provide power for FAPCS and support systems (Non-seismic PRA sequences)	B2 C	Provide power for FAPCS and its supporting systems	C

Table 22.20-1

Changes to RTNSS Classification Between DCD Revisions 4 and 5

System	Description	DCD R4 Criterion	DCD R5 Changes	DCD R5 Criterion
DPS	Diverse actuation of ECCS functions needed to meet Focused PRA goals – High Regulatory Oversight	C	DPS - GDCS Actuation	C
			DPS - ADS Actuation	C
			DPS - RWCU/SDC Isolation	C
			DPS - IC/PCC Pool Makeup Valve Actuation	C
Drywell Hatches	Provide boundary for recovering vessel level following a Shutdown LOCA below top of fuel event	C	Reclassified as Adverse Systems Interaction	E
EB HVAC	Provide post 72-hour cooling for DGs and 1E Electrical Distribution Provide support for electrical power to FAPCS	B2 C	No Change	C
External Connection	Provide post 7-day refill to PC/ICC and Spent Fuel pools	B1	Not RTNSS – Not required in first 7 days	N/A
FAPCS	Suppression pool cooling and low pressure coolant injection modes (Non-seismic PRA sequences)	C	No Change	C
FB HVAC	Provide cooling support for FAPCS	C	No Change	C
Feedwater Runback	Run FW demand to minimum on ATWS signal	A	DPS - Feedwater Runback Actuation	A

Table 22.20-1

Changes to RTNSS Classification Between DCD Revisions 4 and 5

System	Description	DCD R4 Criterion	DCD R5 Changes	DCD R5 Criterion
PAM Instruments (DCIS)	Provide post accident monitoring (use RG 1.97 to determine scope)	B2	Q-DCIS provides PAM, however, it does not need room cooling. Instead, local cooling will be provided by CRHAVS AHUs	B
PIP Buses	Provides post 72-hour AC power from standby diesel generators to support Post-Accident Monitoring, and FAPCS	B2 C	Support AC Power to FAPCS and its supporting systems	C
PSWS	Provide post 72-hour cooling for RCCWS Provide cooling support for FAPCS	C	No Change	C
RB HVAC	Provide post 72-hour cooling for DCIS	B2	Supports N – DCIS for FAPCS	C
RCCWS	Provide post 72-hour cooling for Chillers and DGs Provide cooling support for FAPCS	B2 C	No Change	C
SLCS Actuation	Backup actuation to initiate SLCS and isolate RWCU/SDC	B2 C	DPS described below	C
TB HVAC	Provide post 72-hour cooling for DCIS in Turbine Building Provide room cooling for RCCW pumps	B2 C	No longer needed for Q-DCIS Turbine Bldg cabinets. Needed for RCCW and NICWS local room coolers (to support FAPCS)	C

Table 22.20-1

Changes to RTNSS Classification Between DCD Revisions 4 and 5

System	Description	DCD R4 Criterion	DCD R5 Changes	DCD R5 Criterion
Motor-Driven RPV Makeup Pump	Not in R4	N/A	Motor-driven FPS Pump provides backup for IC/PCC Pools and Spent Fuel Pool refill	B
GDCS Deluge Valves	Not in R4	N/A	Support BiMAC operation	D
FPS to FAPCS Connection Piping	Not in R4	N/A	Supports cooling to IC/PCCS pools	B
Standby DG Auxiliaries	Not in R4	N/A	Supporting equipment for Standby DG	C
Ancillary Diesel Generators	Not in R4	N/A	Provide power for PCC Vent Fans, Motor-Driven FPS Pump, Q-DCIS	B
Ancillary AC Power Buses	Not in R4	N/A	480 VAC Buses for Ancillary Loads	B
Ancillary DG Fuel Oil Tank	Not in R4	N/A	Supports Ancillary DG	B
Ancillary DG Fuel Oil Transfer Pump	Not in R4	N/A	Supports Ancillary DG	B
DPS – ADS Inhibit	Not in R4	N/A	ATWS permissive for SLCS	A
DPS – Scram	Not in R4	N/A	Focused PRA DPS function - Low Regulatory Oversight	C

Table 22.20-1

Changes to RTNSS Classification Between DCD Revisions 4 and 5

System	Description	DCD R4 Criterion	DCD R5 Changes	DCD R5 Criterion
DPS- MSIV Closure	Not in R4	N/A	Focused PRA DPS function - Low Regulatory Oversight	C
DPS – SRV Actuation	Not in R4	N/A	Focused PRA DPS function - Low Regulatory Oversight	C
DPS – FMCRD Actuation	Not in R4	N/A	Focused PRA DPS function - Low Regulatory Oversight	C
DPS – ICS Actuation	Not in R4	N/A	Focused PRA DPS function - Low Regulatory Oversight	C
DPS – SLC Actuation on LOCA	Not in R4	N/A	Focused PRA DPS function - Low Regulatory Oversight	C
IC/PCC Pool Connection Valves	Not in R4	N/A	Specific inclusion of these valves as RTNSS	B
PCCS Vent Fans	Not in R4	N/A	Provide long-term reduction in containment pressure by redistributing non-condensable gases from the wetwell to the drywell	B
Passive Auto-Catalytic Recombiners	Not in R4	N/A	Provide long-term reduction in containment pressure by recombining radiolytic generated H2	B

Table 22.20-1

Changes to RTNSS Classification Between DCD Revisions 4 and 5

System	Description	DCD R4 Criterion	DCD R5 Changes	DCD R5 Criterion
Emergency Lighting	Not in R4	N/A	Post-accident monitoring support	B
N – DCIS	Not in R4	N/A	Supports DPS, FAPCS, and supporting equipment for FAPCS	C
CRHAVS Air Handling Units	Not in R4	N/A	Supports long term control room habitability	B
CRHAVS Air Handling Unit auxiliary heating and cooling	Not in R4	N/A	Supports cooling for post-accident monitoring equipment	B
RB HVAC Purge Exhaust Filters	Not in R4	N/A	Adverse System Interaction	E

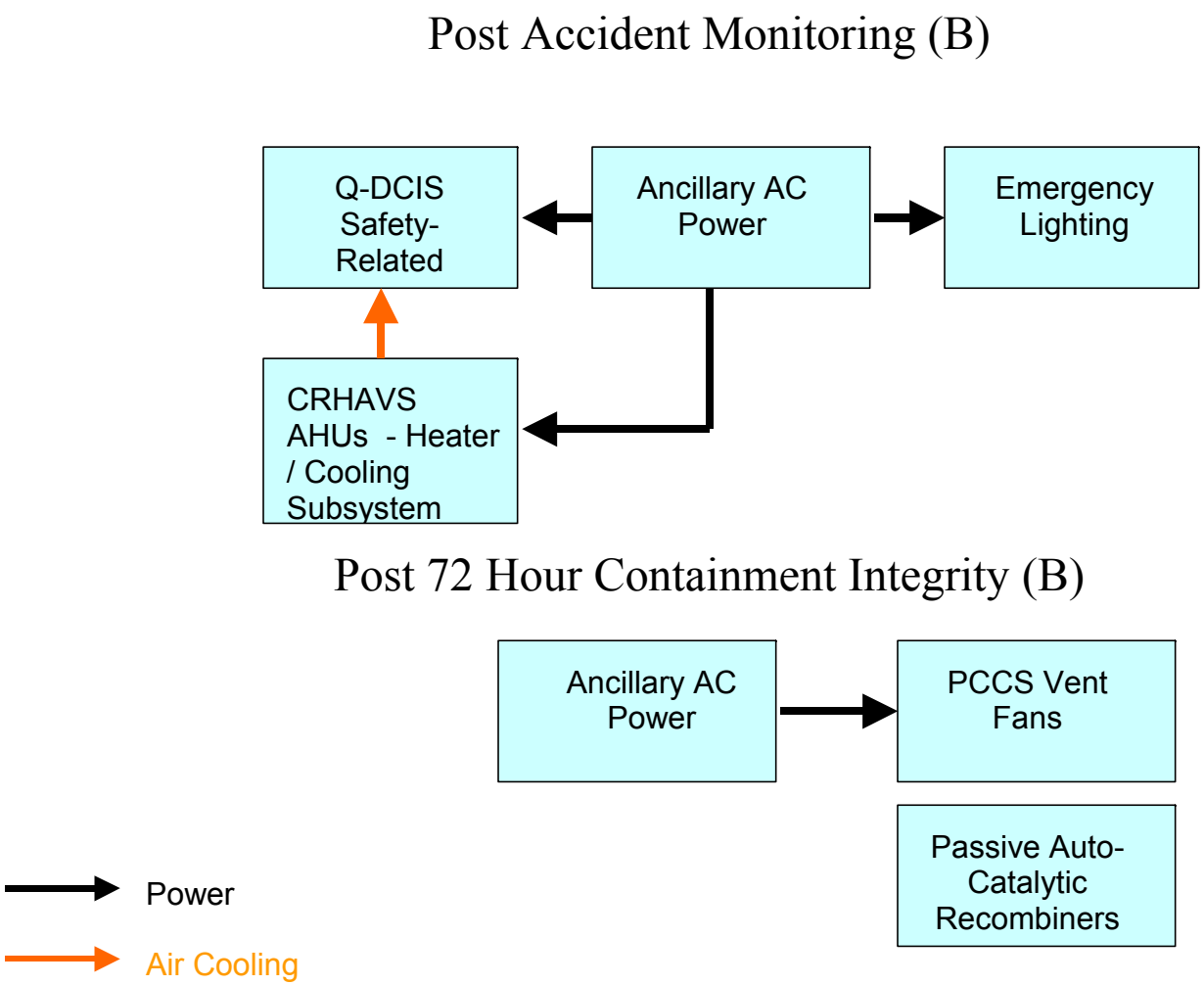

Figure 22.20-1
RTNSS Functional Relationships Supporting Post Accident Monitoring and Containment Integrity

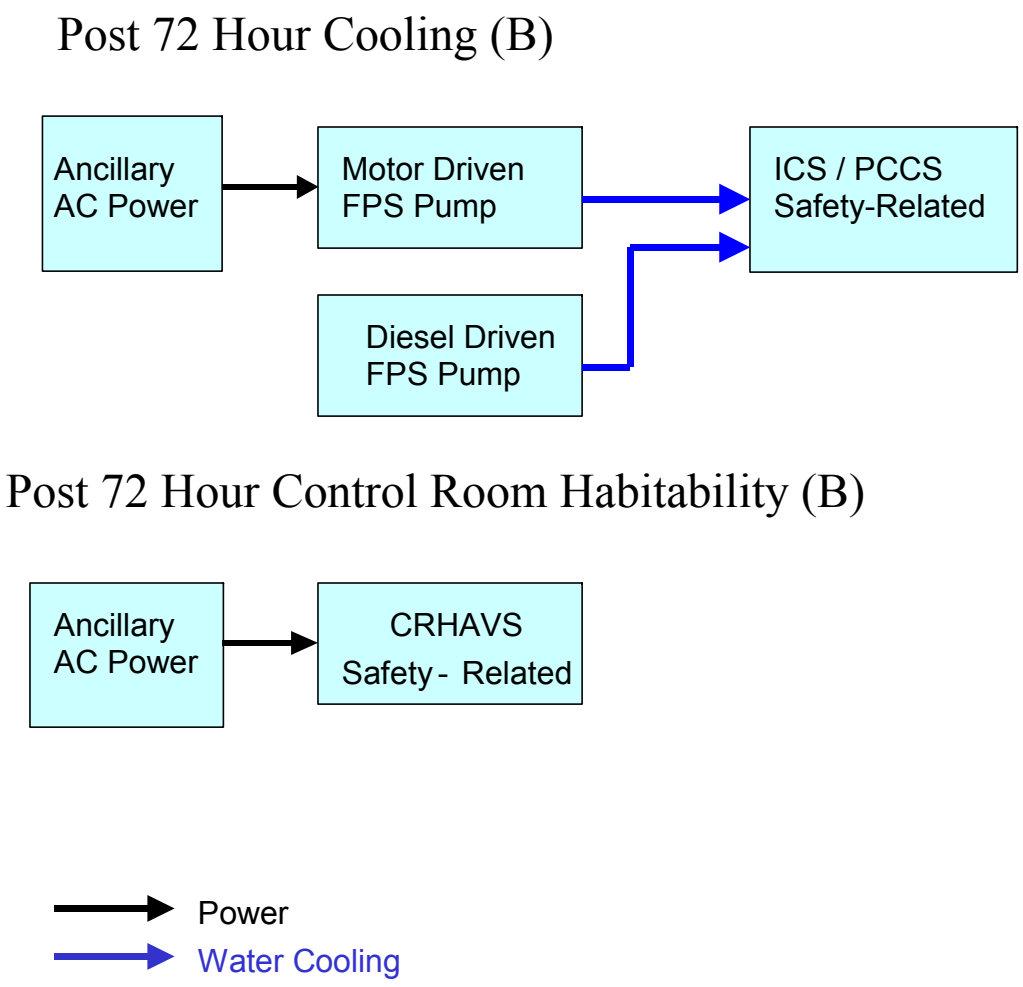

Figure 22.20-2
RTNSS Functional Relationships Supporting Post 72 hour Cooling & Control Room Habitability

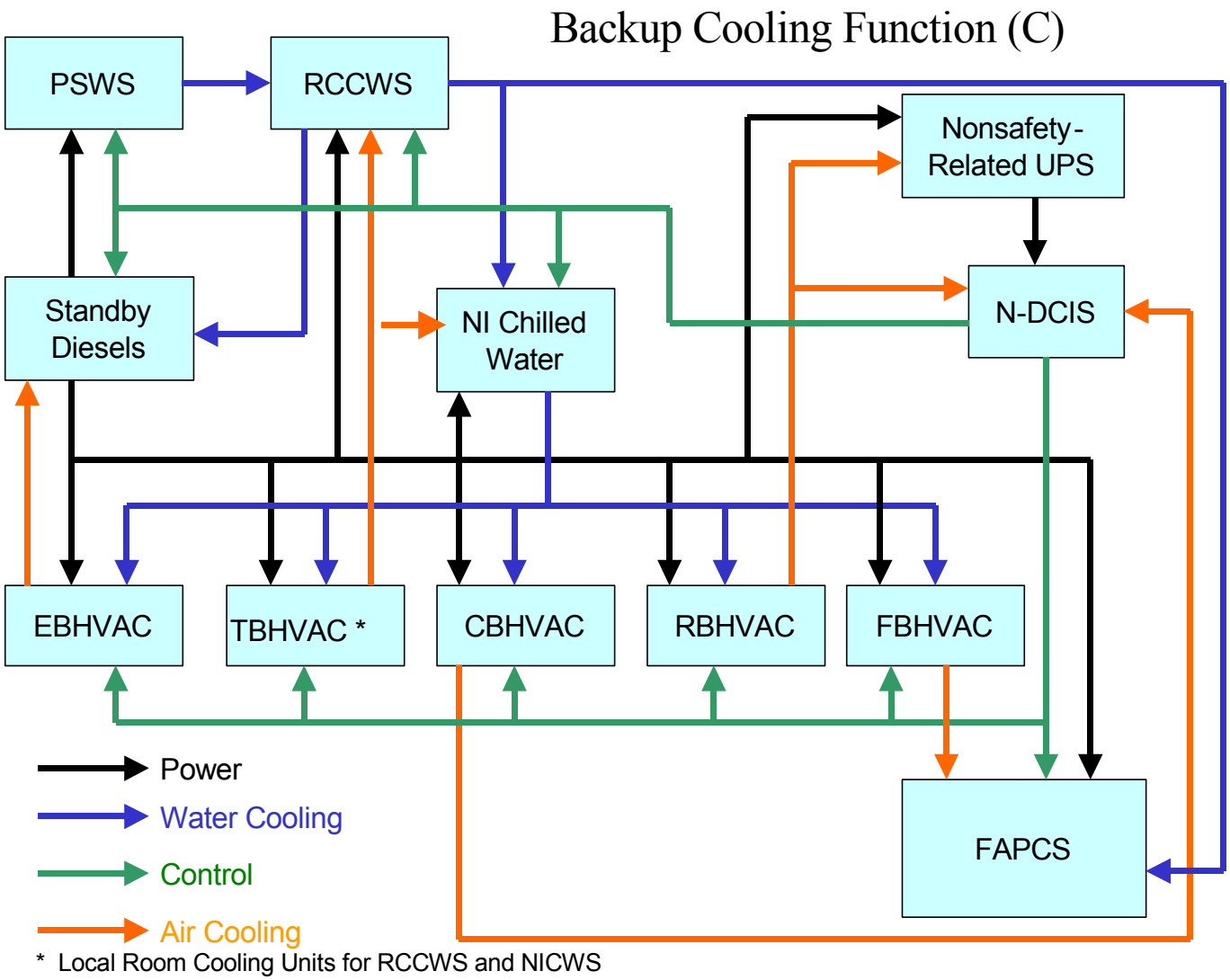

Figure 22.20-3
RTNSS Functional Relationships Supporting B

22.21 SEVERE ACCIDENT MANAGEMENT

ESBWR Severe Accident Management is described in PRA Section 21 and was reviewed using the ROAAM process. The methodology described in Revision 3 of Section 21 and associated appendices is still applicable to the analysis. Section 21 provides the basis of the containment event trees used in the Level 2 PRA. The purpose of this section is to illustrate any significant changes and their effect, if any, on the Severe Accident Management and conclusions.

22.21.1 Significant Design Changes

Design changes and development for DCD Revision 5 have been explained in detail throughout the earlier subsections of Section 22. These changes do not affect the ESBWR Severe Accident Management. The following change has been considered for impact on the ESBWR Severe Accident Management.

22.21.1.1 ESBWR Containment Ultimate Pressure Capability

The ultimate pressure capability of the ESBWR containment was re-analyzed and is described in DCD Appendix 19C. The results of the analysis is shown in Table 22.21.1.1-1.

This re-analysis shows a slight decrease in the limiting failure mode/structural component, DW Head Leakage due to Bolt Yielding, at 260°C (500°F) from 1.219 MPaG (176.8 psig) to 1.095 MPaG (158.8 psig). These values are at the 95% confidence value.

Table 22.21.1.1-1

DCD Table 19C-13 Summary of ESBWR Fragility for Over-Pressurization

Failure Mode	Failure Pressure Factor on P_d Followed by Gauge Pressure, MPaG (psig)					
	Ambient Conditions		260°C (500°F) Steady State		538°C (1000°F) Transient	
	Median	95%HC	Median	95%HC	Median	95%HC
DW Head Leakage due to Bolt Yielding	6.40	5.01	4.60	3.53	5.89	4.43
	1.983 (287.6)	1.552 (225.1)	1.426 (206.8)	1.095 (158.8)	1.826 (264.8)	1.374 (199.3)
Liner Tearing RCCV Wall at Top Slab	5.25	4.13	5.30	4.09	5.84	4.41
	1.628 (236.1)	1.280 (185.6)	1.643 (238.3)	1.267 (183.7)	1.810 (262.5)	1.368 (198.4)
EQ Hatch Leakage - Flange Separation	6.49	5.07	6.07	4.65	3.81	2.86
	2.012 (291.8)	1.573 (228.1)	1.882 (273.0)	1.443 (209.3)	1.181 (171.3)	0.888 (128.8)
RCCV Wall at Top Slab Connection	6.88	4.95	5.61	3.98	6.22	4.34
	2.133 (309.4)	1.536 (222.8)	1.741 (252.5)	1.234 (178.9)	1.928 (279.6)	1.346 (195.2)

22.21.2 Impact

The ultimate pressure capability of the ESBWR containment is compared to the containment pressures calculated in Sections 21.3.4.3 and 21.3.7, Quantification of DCH Loads, listed in Tables 21.3.4.3-6 and 21.3.4.3-6R. The calculated pressures are below the containment pressure capability of the ESBWR containment listed in Table 19C-13.

22.21.3 Conclusion

There have been no design changes or development for DCD Revision 5 that impact the ESBWR Severe Accident Management.

The ESBWR Severe Accident Management, PRA Section 21, does discuss the distribution of classes from the Level 1 PRA. The distribution of classes does change from Revision 2 of the Level 1 PRA to Revision 3 of the Level 1 PRA, see Section 22.7. However, the distribution of classes in Revision 3 of the Level 1 PRA is more consistent with the original distribution reviewed in the ROAAM process.