AREVA

COGEMA Mining, Inc.

Irigaray and Christensen Ranch Projects
U.S. NRC License Renewal Application
Source Material License SUA-1341

May, 2008

TABLE OF CONTENTS

1.0 Proposed Activities
- 1.1 Licensing Action Requested 1-1
- 1.2 Project and Ownership History 1-1
  - 1.2.1 Project Ownership History 1-1
  - 1.2.2 Location and Land Ownership 1-2
  - 1.2.3 Descriptions of Existing Facilities 1-4

2.0 Site Description and Characteristics
- 2.1 Area Location and Description 2-1
- 2.2 Land and Water Use and Ownership 2-1
  - 2.2.1 Area and Adjacent Lands 2-1
  - 2.2.2 Agriculture Activity 2-3
  - 2.2.3 Recreation 2-3
  - 2.2.4 Water Rights 2-4
  - 2.2.5 Protection of Other Mineral Resources 2-4
- 2.3 Regional Demography and Socioeconomics 2-6
  - 2.3.1 Demography 2-6
  - 2.3.2 Socioeconomics 2-6
- 2.4 Regional Historical, Archaeological, Architectural, Scenic, Cultural and National Landmarks 2-10
- 2.5 Climatology and Meteorology 2-11
  - 2.5.1 General Area Characteristics 2-11
- 2.6 Geology and Seismology 2-12
  - 2.6.1 Regional Geology 2-12
  - 2.6.2 Site Geology 2-12
  - 2.6.3 Seismology 2-12
- 2.7 Hydrology 2-12
  - 2.7.1 Groundwater 2-12
  - 2.7.2 Surface Water 2-14
- 2.8 Ecology 2-16
  - 2.8.1 Terrestrial Ecology 2-16
  - 2.8.2 Aquatic Ecology 2-18
- 2.9 Background Radiological Characteristics 2-18
- 2.10 Background Non-Radiological Characteristics 2-18

3.0 Description of Proposed Operations 3-1
- 3.1 Site Description and Facilities Layout 3-2
  - 3.1.1 Irigaray Site 3-2
  - 3.1.2 Christensen Ranch Site 3-3
- 3.2 Description of the Orebodies 3-6
  - 3.2.1 Ore Body 3-6
  - 3.2.2 Reserve Estimates 3-6
  - 3.2.3 Mine Unit Locations 3-7
- 3.3 Well Field Design, Construction and Operation 3-7
  - 3.3.1 Well Field Design 3-7
    - 3.3.1.1 Pattern Types - Past and Current 3-7
    - 3.3.1.2 Monitor Wells - Past and Current 3-10
  - 3.3.2 Well Construction and Completion Techniques 3-11
    - 3.3.2.1 Well Completion Techniques 3-11
    - 3.3.2.2 Well Integrity Testing Procedures 3-18
    - 3.3.2.3 Abandoned Exploration Drill Holes 3-19
  - 3.3.3 Well Field Operations 3-22
    - 3.3.3.1 Lixiviant Composition 3-22
    - 3.3.3.2 Anticipated Geochemical Reactions 3-22

TABLE OF CONTENTS

3.3.3.3 Well Field Piping, Instrumentation and Operation 3-23
3.3.3.4 Well Field Balance and Injection Pressures 3-26
3.3.3.5 Well Field Chlorination 3-26
3.3.3.6 Power Transmission and Communication Lines 3-27
3.3.3.7 Wellfields Maintenance 3-27
3.3.3.8 Subsidence Risk Due to Well Fields Operations 3-27
3.4 Uranium Recovery Processing Facilities 3-27
3.4.1 Irigaray Central Recovery Plant 3-28
3.4.1.1 General Arrangement 3-28
3.4.1.2 Ion Exchange\Lixiviant Makeup Circuit 3-29
3.4.1.3 Elution and Precipitation Circuit 3-31
3.4.1.4 Yellowcake Dewatering, Drying and Packaging 3-31
3.4.1.5 Vanadium Separation 3-33
3.4.1.6 Flow and Material Balance 3-34
3.4.1.7 Wastewater Management 3-34
3.4.1.8 Equipment, Instrumentation and Control 3-36
3.4.2 Christensen Ranch Satellite Plant 3-39
3.4.2.1 General Arrangement 3-39
3.4.2.2 Ion Exchange/Lixiviant Makeup Circuit 3-39
3.4.2.3 Flow and Material Balance 3-42
3.4.2.4 Wastewater Management 3-44
3.4.2.5 Satellite Plant Equipment, Instrumentation and Control 3-45
3.5 Access Roads 3-48
3.6 Construction Considerations 3-48
3.7 Development Schedule 3-48
4.0 Effluent Control Systems
4.1 Gaseous and Airborne Particulates 4-1
4.1.1 Christensen Ranch Satellite Facility 4-1
4.1.2 Irigaray Facility 4-2
4.2 Liquids and Solids 4-7
4.2.1 Christensen Ranch Site 4-7
4.2.1.1 Lined Evaporation Pond Design 4-7
4.2.1.2 Permeate Storage Pond Design 4-9
4.2.1.3 Spillage Containment System 4-10
4.2.1.4 Other Liquid Effluent Disposal Options 4-10
4.2.1.5 Solid Effluents and Waste Disposal 4-11
4.2.2 Irigaray Facility 4-11
4.2.2.1 Lined Evaporation Pond Design 4-11
4.2.2.2 Restoration Pond Design 4-13
4.2.2.3 Spillage Containment System 4-14
4.2.2.4 Other Liquid Effluent Disposal Options 4-14
4.2.2.5 Solid Effluents and Waste Disposal 4-14
4.3 Contaminated Equipment 4-15
5.0 Operations
5.1 Corporate Organization and Administrative Procedures 5-1
5.1.1 General Manager, ISL Operations 5-1
5.1.2 Wyoming Division Manager 5-2
5.1.3 Manager, ISL Environmental and Regulatory Services 5-2
5.1.4 Radiation Safety Officer 5-2
5.1.5 Environmental Specialist/RST 5-4
5.1.6 Radiation Safety Auditor 5-4
5.2 Management Control Program 5-4

TABLE OF CONTENTS

5.2.1 Operating Procedures 5-4
5.2.2 Safety and Environmental Review Panel 5-5
5.3 Management Audit and Inspection Program 5-5
5.4 Qualifications 5-7
5.5 Training 5-8
5.5.1 Training Program Content 5-8
5.5.2 Testing Requirements 5-9
5.5.3 On-The-Job Training 5-10
5.5.4 Refresher Training 5-10
5.5.5 Training Records 5-10
5.6 Security 5-11
5.6.1 Irigaray Site Security 5-11
5.6.2 Christensen Ranch Site Security 5-11
5.7 Radiation Safety Controls and Monitoring 5-12
5.7.1 Effluent Control Techniques 5-12
5.7.1.1 Gaseous and Airborne Particulates 5-12
5.7.1.2 Spill Contingency Plans 5-13
5.7.2 External Radiation Exposure Monitoring Program 5-15
5.7.2.1 Gamma Survey 5-15
5.7.2.2 Personnel Dosimetry 5-20
5.7.3 Airborne Radiation Monitoring Program 5-22
5.7.3.1 Airborne Uranium Particulate Monitoring 5-22
5.7.3.2 Radon Daughter Surveys 5-26
5.7.4 Exposure Calculations 5-28
5.7.4.1 Natural Uranium 5-28
5.7.4.2 Radon Daughter Exposure 5-33
5.7.4.3 Total Effective Dose Equivalent 5-36
5.7.4.4 Respiratory Protection Program 5-36
5.7.5 Bioassay Program 5-36
5.7.6 Contamination Control Program 5-39
5.7.7 Monitoring Program Summary 5-41
5.8 Environmental Monitoring Programs 5-44
5.8.1 Airborne Effluent and Environmental Monitoring Programs 5-44
5.8.2 Groundwater and Surface Water Monitoring Programs 5-61
5.8.2.1 Regional Groundwater Monitoring 5-61
5.8.2.2 Mine Unit Groundwater Monitoring 5-61
5.8.2.3 Upper Control Limits and Excursion Monitoring 5-72
5.8.2.4 Surface Water Monitoring 5-75
5.8.3 Evaporation Pond Leak Detection Monitoring 5-81
5.9 Quality Assurance Program 5-82
5.10 Reporting Procedures 5-83
5.10.1 Routine Reports 5-83
5.10.1.1 Semi-Annual Report 5-83
5.10.1.2 Annual Report 5-83
5.10.1.3 Mine Unit Data Submittals 5-84
5.10.2 Non-Routine Reports 5-86
6.0 Restoration and Reclamation Plans
6.1 Groundwater Restoration 6-1
6.1.1 Target Restoration Values 6-1
6.1.2 Restoration Processes 6-2
6.1.2.1 Groundwater Sweep 6-3
6.1.2.2 Reverse Osmosis/Permeate Injection Phase 6-5

TABLE OF CONTENTS

6.1.2.3 Recirculation 6-7
6.1.2.4 Stabilization Monitoring 6-7
6.1.3 Proposed Restoration Program 6-7
6.1.3.1 Restoration Schedule 6-8
6.1.3.2 Monitoring During Restoration 6-8
6.1.3.3 Determination of Restoration Success 6-9
6.1.4 Irigaray Restoration History 6-9
6.1.5 Christensen Ranch Restoration History 6-9
6.2 Decontamination and Decommissioning 6-12
6.2.1 Well Plugging and Abandonment 6-12
6.2.2 Records and Reporting Procedure 6-13
6.3 Surface Reclamation 6-13
6.4 Bonding Assessment 6-13
6.4.1 Bond Calculations 6-13
6.4.2 Final Surety Arrangements 6-14
7.0 Environmental Effects
7.1 Site Preparation and Construction 7-1
7.1.1 Process Facilities and Pond Construction 7-1
7.1.2 Wellfield Disturbances 7-2
7.2 Operational Impacts 7-2
7.2.1 Air Quality Impacts 7-2
7.2.2 Land Use Disturbance Impacts 7-3
7.2.3 Impacts to Water Resources 7-4
7.2.3.1 Groundwater Consumption 7-4
7.2.3.2 Groundwater Quality 7-4
7.2.3.3 Construction and Operations Impacts to Surface Water 7-5
7.2.4 Ecological Impacts 7-6
7.3 Radiological Impacts 7-7
7.3.1 Exposure Pathways 7-7
7.3.2 Exposures From Water Pathways 7-8
7.3.3 Exposures From Air Pathways 7-10
7.3.3.1 Source Term Estimates 7-10
7.3.3.1.1 Production Releases 7-11
7.3.3.1.2 Restoration Releases 7-12
7.3.3.1.3 New Wellfield Releases 7-12
7.3.3.1.4 Resin Transfer Releases 7-13
7.3.3.1.5 Radon-222 Release Summary 7-14
7.3.3.1.6 Other Airborne Radionuclide Releases 7-14
7.3.3.2 Receptors 7-14
7.3.3.3 Miscellaneous Parameters 7-16
7.3.3.4 Total Effective Dose Equivalent (TEDE) to Individual Receptors 7-16
7.3.3.5 Population Dose 7-18
7.3.3.6 Exposure to Flora and Fauna 7-18

7.3 References 7-19
7.4 Non-Radiological Effects 7-20
7.5 Effects of Accidents 7-20
7.5.1 Accidents Involving Radioactivity 7-20
7.5.1.1 Tank Failure 7-20
7.5.1.2 Pipe Failure 7-20
7.5.1.3 Lined Evaporation Ponds 7-21
7.5.1.4 Lixiviant Excursion 7-21

TABLE OF CONTENTS

7.5.2 Transportation Accidents 7-21
7.5.2.1 Accidents Involving Yellowcake Shipments 7-22
7.5.2.2 Accidents Involving Resin Transfers 7-23
7.5.2.3 Accidents Involving Shipments of Process Chemicals 7-24
7.5.2.4 Accidents Involving Radioactive Wastes 7-24
7.5.3 Other Accidents 7-24
8.0 Alternatives to Proposed Action 8-1
8.1 Alternative Lixiviant Chemistry 8-1
8.2 Waste Management Alternatives 8-1
8.3 Uranium Recovery Process Alternatives 8-1
8.4 Mining Alternatives 8-2
8.5 Alternative to No Licensing Action 8-2
9.0 Benefit-Cost Summary 9-1
9.1 General 9-1
9.2 Quantifiable Benefits and Costs 9-1
10.0 Environmental Approvals and Consultations 10-1
11.0 References 11-1

LIST OF FIGURES

2.1 Irigaray and Christensen Ranch Area- General Location Map 2-2
2.2 Population Centers Within a 50 Mile Radius of the Irigaray and Christensen Ranch Plant Sites 2-5
3.1 Irigaray and Christensen Ranch Permit Area ..... Pocket
3.2 Irigaray Project - General Location Map ..... Pocket
3.3 Christensen Ranch Area Facilities Location ..... Pocket
3.4 Typical Five Spot, Alternating of Staggered Line Drive Patterns With Corresponding Flow Lines 3-9
3.5 Typical Injection and Recovery Well Completion Intervals 3-14
3.6 Well Completion Method 1- Underreamed Intervals 3-15
3.7 Well Completion Method 2- Open Hole Intervals 3-16
3.8 Well Completion Method 3- Screened Intervals of Open Holes 3-17
3.9 Repair Method for Injection Wells 3-21
3.10 Irigaray Recovery Facility - General Diagram 3-30
3.11 Process Flow Sheet Irigaray Recovery Facility 3-35
3.12 Christensen Ranch Satellite Plant - General Arrangement Diagram 3-41
3.13 Process Flow Sheet Satellite Extraction Plant- Christensen Ranch Uranium Recovery Plant (Absorption Circuit) 3-43
3.14 Development Schedule 3-50
4.1 Drying/Packing Unit Schematic - Irigaray Process Plant 4-5
5.1 Radiation Safety/Environmental Protection Organizational Chart 5-3
5.2 Christensen Ranch Satellite Monitoring Facility In Plant Radiological Monitoring Locations 5-18
5.3 Irigaray Facility In Plant Radiological Monitoring Locations 5-19
5.4 Dry-Pack Level Air Sample Locations 5-25
5.5 Irigaray and Christensen Ranch Environmental Monitoring Station Locations ..... Pocket
6.1 Christensen Typical Restoration Process Flow Diagram 6-4
7.3-1 Human Exposure Pathways for Known and Potential Sources at the Christensen Ranch-Irigaray Uranium In-Situ Recovery Project 7-9

LIST OF TABLES

1.1 Irigaray Land Ownership 1-3
1.2 Christensen Ranch Land Ownership 1-4
2.1 Ranch and Town Populations Near Plant Sites 2-7
2.2 Other Uranium Solution Mining Operations 2-8
3.1 Estimated Mining Disturbance by Development Area - Christensen Ranch 3-4
3.2 Anticipated Geochemical Reactions During Mining 3-24
3.3 Irigaray Plant Equipment List 3-37
3.4 Christensen Ranch Operations Equipment List 3-46
4.1 Summary of Stack Emissions Survey Irigaray Dryer and Packaging Circuit 4-6
5.1 External Gamma Radiation Survey Summary 5-17
5.2 External Radiation Exposure Monitoring Summary 5-21
5.3 In-plant Airborne Uranium Monitoring Summary 5-24
5.4 In-plant Radon Daughter Monitoring Summary 5-27
5.5 Airborne Uranium Exposure Summary 5-30
5.6 Proposed Uranium Solubility Classifications 5-32
5.7 Annual Radon Daughter Exposure Results 5-35
5.8 Annual Total Effective Dose Equivalent Summary 5-37
5.9 Surface Contamination Survey Summary 5-42
5.10 Irigaray and Christensen Ranch Radiological Monitoring Program Summary 5-43
5.11 Irigaray Radon Gas Monitoring Summary 5-45
5.12 Christensen Ranch Radon Gas Monitoring Summary 5-46
5.13 Environmental Radon Release 5-47
5.14 Irigaray Environmental Air Particulate Monitoring Summary 5-49
5.15 Irigaray Annual Soil Sampling Program Summary 5-51
5.16 Christensen Ranch Annual Soil Sampling Program Summary 5-52
5.17 Irigaray Annual Vegetation Sampling Program Summary 5-53
5.18 Christensen Ranch Vegetation Sampling Program Summary 5-54
5.19 Irigaray Environmental Gamma Survey Summary 5-56
5.20 Christensen Ranch Environmental Gamma Survey Summary 5-57
5.21 Christensen Ranch Environmental Airborne Effluent Monitoring Program 5-59
5.22 Irigaray Environmental Airborne Effluent Monitoring Program 5-60
5.23 Regional Groundwater Monitoring Results 5-63
5.24 Irigaray and Christensen Environmental Groundwater and Surface Water Monitoring Program 5-68
5.25 Regional Surface Water Monitoring Results 5-76
6.1 Restoration Groundwater Monitoring Schedule and Analyses 6-10
7.3-1 Parameters used to estimate and characterize source terms at the Christensen Ranch 7-10
7.3-2 Estimated Radon-222 releases (Ci yr-1) from Christensen Ranch-Irigaray Facility 7-14
7.3-3 Estimated long-lived radionuclide releases (Ci yr-1) from Irigaray Facility 7-14
7.3-4 Christensen Ranch-Irigaray receptor names and locations 7-15
7.3-5 MILDOS-Area predicted radon-222 concentrations and estimated TEDE at directional receptors surrounding the Christensen Ranch-Irigaray uranium processing facility 7-17
7.3-6 Total Effective Dose Equivalent to the population from one year's operation at the Christensen Ranch-Irigaray Facility 7-18
7.3-7 Highest surface radionuclide concentrations resulting from Christensen Ranch-Irigaray uranium ISR operations 7-19

LIST OF APPENDICES

A Updates Water Rights
B Coal Bed Methane Impacts
C Wildlife Survey; Threatened & Endangered Species Report
D MILDOS Printout

1.0 PROPOSED ACTIVITIES

1.1 LICENSING ACTION REQUESTED

This application is made by COGEMA Mining, Inc. (COGEMA) for renewal the United States Nuclear Regulatory Commission (USNRC) Source Material License No. SUA-1341 for the continuation of in situ mining operations at the Irigaray/Christensen Ranch facilities located in Johnson and Campbell counties, Wyoming. The revisions reflected in this document are also being forwarded to the Wyoming Department of Environmental Quality (WDEQ) as an update to Permit to Mine No. 478, Amendment No. 2.

The renewal application has been prepared using suggested guidelines and standard formats from both state and federal agencies. The application is primarily structured in the USNRC format of Regulatory Guideline No. 3.46.

This renewal application essentially updates the Irigaray and Christensen Ranch commercial ISL uranium mining operations since 1998, the time of the last USNRC license renewal. This introductory section briefly summarizes the project ownership history and the projects themselves.

COGEMA requests that the license be re-issued for a ten year period, rather than a five year period, as it will be a performance based license which allows updating of the application for certain operations on an annual basis.

1.2 PROJECT AND OWNERSHIP HISTORY

1.2.1 PROJECT OWNERSHIP HISTORY

The Irigaray project was licensed for commercial ISL uranium operation in August 1978. The project was then owned and operated by Wyoming Mineral Corporation, a subsidiary of Westinghouse Electric Corporation. The Irigaray project was licensed to operate at an 800 gallon per minute (gpm) flow rate, using an ammonium bicarbonate lixiviant. Due to the difficulties with restoring formations mined with ammonia, the lixiviant was changed to sodium bicarbonate in 1980. The uranium (yellowcake) dryer at the Irigaray facility was operated non-continuously during 1980. Additionally, the use of sodium bicarbonate was discontinued in the uranium precipitation cycle in the processing plant in favor of precipitation with hydrogen peroxide. In 1982, operations ceased at the Irigaray plant and wellfields, and the facility was placed on standby status pending improvements in the uranium market.

In June of 1987, Malapai Resources Company (a subsidiary of Arizona Public Service) purchased the Irigaray site from Westinghouse and resumed operations. In 1988, Malapai

amended the WDEQ Permit 478 and USNRC SUA-1341 Irigaray permits and license to include the Christensen Ranch satellite ion exchange plant and associated mine units. The Irigaray process was then upgraded to include facilities for processing ion exchange resin from Christensen Ranch, and the flow rate of the Irigaray recovery plant was increased to a 2,400 gpm capacity. Although the dryer unit was available for processing the uranium, Malapai chose to ship a slurry product for economic reasons. Malapai Resources Company continued operations through February of 1990. Due to financial difficulties within Arizona Public Service, Malapai Resources Company was sold to Electricite de France (EdF), the French Nuclear utility, in September 1990. EdF chose not to operate the Irigaray site themselves, and selected another French company, Total Minerals Corporation (TOMIN), to be the operator of the Irigaray and Christensen Ranch projects. Effective September 20, 1990, all State and Federal permits and licenses formerly held by Malapai were transferred to TOMIN. TOMIN resumed operations of the Malapai properties in 1991.

In April 1993, a large stock exchange occurred in France between COGEMA and TOTAL (parent of Total Minerals Corporation), in which TOTAL acquired 10% of COGEMA stock and, in return, COGEMA acquired all of TOTAL's uranium properties in the world, plus stock in TOTAL. As a result, COGEMA acquired the operatorship of the EdF Malapai properties in Wyoming and Texas. The exchange was formalized in July, 1993, and in November, 1993 the name of Total Minerals Corporation was changed to COGEMA Mining, Inc. (COGEMA). COGEMA maintains its operational offices in Mills, Wyoming.

Operations continue under COGEMA management. Production with lixiviant injection ended in June, 2000, and activities for the past eight years have been devoted toward well fields restoration and site decommissioning (see section 1.2.3). The recent resurgence of the uranium mining industry led to COGEMA's decision to request a license amendment from the NRC to change the license from a decommissioning status to an operational status. That amendment request was submitted to the NRC in April, 2007. Pending approval of the amendment request, COGEMA has prepared this license renewal and mine permit update submittal.

Any future mine development at Irigaray likely would be a minimum of ten years from the point of operations restart at Christensen Ranch. Because of the uncertainty of future mine development at Irigaray and the need for a major plant re-construction to accommodate mining at Irigaray, future mine development at Irigaray is beyond the scope of activities addressed in this document. If further Irigaray development were placed on a faster track than currently anticipated, COGEMA would submit a license/permit revision to address the change.

1.2.2 LOCATION AND LAND OWNERSHIP

The Irigaray/Christensen Ranch project is an in-situ leach (ISL) uranium mining operation

located approximately 55 miles southeast of Buffalo, Wyoming, and 51 miles northeast of Midwest, Wyoming. The project is actually composed of two distinct areas. The first area, generally referred to as the Irigaray site or the Irigaray central plant, is located in southeast Johnson County, Wyoming. The uranium deposit is one of many located in the Powder River Basin in northeast Wyoming. The property consists of approximately twenty-eight square miles within Townships 45, 46, 47 North, Ranges 77 and 78 West. The current mine site is located within Sections 5, 8, 9 and 16 of Township 45 North, Range 77 West.

Lands which make up the approximately 21,100 acres of leases and Federal unpatented lode mining claims located in the Irigaray property are owned by the following:

TABLE 1.1
IRIGARAY LAND OWNERSHIP

SURFACE OWNERSHIP	MINERAL OWNERSHIP
L. Brubaker, et al.	Irigaray and BLM
Bureau of Land Management	Bureau of Land Management (BLM)
State of Wyoming	State of Wyoming
Streeter	BLM and Streeter

Land or mineral ownership of the Irigaray area has not changed significantly since the issuance of the Final Environmental Statement for the Irigaray Site, NUREG-0481, in 1978, nor are any future changes foreseen at this time. Maps of the surface and mineral ownership are discussed in Chapter 2.0, Section 2.1, "Site Location and Layout", of this renewal application.

The second area is the Christensen Ranch wellfield and satellite operation (ion exchange plant), which is located approximately 13 miles southeast of the Irigaray site. The Christensen Ranch operations consist of approximately 14,000 acres in Townships 44 and 45 North, Ranges 76 and 77 West in Johnson and Campbell Counties, Wyoming. COGEMA maintains approximately 600 unpatented lode mining claims and two State mining leases within and surrounding the Christensen Ranch area. Ownership of the property is as follows:

TABLE 1.2
CHRISTENSEN RANCH LAND OWNERSHIP

SURFACE OWNERSHIP	MINERAL OWNERSHIP
Bureau of Land Management (BLM)	BLM
State of Wyoming	State of Wyoming
John O. Christensen	John O. Christensen, et al. and BLM

1.2.3 DESCRIPTION OF EXISTING FACILITIES AND SITE STATUS

Roll-front uranium mineralization is present at the both the Irigaray and Christensen Ranch properties in the Wasatch formation. Remaining reserves on the entire Irigaray property controlled by COGEMA are approximately seven million pounds. Economic reserves remaining on the Christensen Ranch property are approximately nine million pounds in today's uranium market.

Previous mining operations at the Irigaray Site were conducted in twelve acres of wellfield (Production Units 1 through 5) in 1978 through 1981 by Westinghouse. Production Units 6 through 9 were operated by Malapai in 1987 through 1990, in addition to continued operations in Units 1 through 5. Restoration of Units 1 through 3 began in 1990 and stabilization monitoring ended at the beginning of 1994. Restoration in Units 4 and 5 began in 1992, was temporarily suspended in 1994, and resumed in April, 1995 in combination with restoration in Units 6 through 9. Restoration of all units was completed by late 2001. The final Wellfield Restoration Report, Irigaray Mine, July, 2004, was submitted to WDEQ on July 26, 2004. The Irigaray wellfields restoration was approved by WDEQ in 2005 (WDEQ/LQD letter, November 1, 2005), and subsequently approved by the NRC in 2006 (USNRC letter, September 20, 2006).

Operations at Christensen Ranch began in April, 1989 in Mine Unit 3. Operations were suspended in February, 1990 with the sale of the company. Operations in Mine Unit 3 resumed in 1992, and mining started in MU 2. MU 4 came on line in 1994, and MU 5 in 1995. MU 6 went into production in early 1997. All mining (lixiviant injection) ended by June, 2000. MUs 2, 3. and 4 went into restoration in 1997, and MUs 5 and 6 went into restoration in 2000. The restoration of all existing Christensen Ranch wellfields (including stability monitoring) was completed by 2006. The Wellfield Restoration Report, Christensen Ranch Project, Wyoming, March 5, 2008, was submitted to WDEQ and the NRC on April 8, 2008.

Plugging and abandonment of wells at Irigaray is 99% complete, and much of the decommissioning of the Irigaray wellfields surface facilities has been completed. The facilities in the Irigaray main plant building have been decommissioned (there remains only one tank used to hold waste water prior to transfer to an evaporation pond). The sand filter tanks and restoration IX columns have been removed from the Irigaray annex building. Five of seven evaporation ponds at Irigaray have been decommissioned (liners, leak detection systems, and contaminated underlying soil removed). All decommissioning activities that have been accomplished to date have been consistent with the approved Decommissioning Plan referenced in Condition 9.3 of license SUA-1341.

The recovery of the uranium market in recent years has prompted the decision to restart operations. In a letter to the NRC dated April 3, 2007, COGEMA requested an amendment of SUA-1341 to revert the project to an operating status. This renewal application is predicated upon final approval by the NRC of that amendment request.

Recently, various maintenance tasks have been completed on the remaining plant facilities at Irigaray and at the Christensen Ranch satellite ion exchange plant. These maintenance tasks have been accomplished in anticipation of a restart of operations. A resumption of mining would focus on Christensen Ranch with the transport of loaded resin to Irigaray for elution, precipitation, and yellowcake drying and packaging. Future operations at Christensen Ranch will include completion of MU 7, and the sequential development of MUs 8 through 12. COGEMA has submitted a baseline wellfield data package for MU 7 to WDEQ (COGEMA, June, 2007). Initial comments (November, 2007) were received from WDEQ regarding the MU 7 wellfield data package. COGEMA's response to those comments is pending. MUs 8 through 12 will each entail installation of monitor wells, baseline data collection, and submittal of a wellfield data package prior to any installation of production wells. Future operations also might include production from MUs 5 and possibly 6 (entailing re-entry to these previously restored well fields).

Initial restart activity will focus on well fields drilling beginning in September, 2008, and with an anticipated commencement of lixiviant injection by the second quarter of 2009. Production is scheduled to run for twelve years from the Christensen Ranch wellfields. Wellfield restoration is scheduled to occur in sequence as production from each wellfield is completed. Restoration of the final produced wellfield will be completed within three years of the end of production. Overall, remaining Christensen project life is about sixteen years. As noted above, any future development of remaining reserves at Irigaray would require a major re-construction of the Irigaray plant to replace the decommissioned circuits that previously supported mining at Irigaray. COGEMA would submit to the NRC and WDEQ a plan revision for such a facilities renovation well in advance of any work. Additional mining at Irigaray would require significant development work that would require up to four years before any mining occurred. If remaining reserves at Irigaray were developed, the overall project life could be extended an additional eight years. A life of mine schedule is

presented in Section 3 of this submittal.

Currently, processing facilities include the central plant at Irigaray which consists of circuits for Christensen loaded resin processing such as elution, precipitation and drying/packaging. The Christensen Ranch satellite extraction plant consists of an ion exchange circuit which will be operated at a flow rate of 4,000 gpm on an annual average, and a lixiviant makeup circuit. Water treatment processes such as reverse osmosis are used to clean well field bleed water for use in future restoration. Uranium-laden resin from the ion exchange columns will periodically be transferred to a tanker trailer and trucked to the Irigaray central plant for elution, final uranium precipitation, and drying.

Drying capability at the Irigaray plant is equivalent to approximately 2.5 million pounds throughput per year, exceeding projected wellfields production at Christensen Ranch. However, toll drying of other licensee's uranium may be considered in the future. Toll drying would effectively utilize the projected excess dryer capacity.

Wastewater disposal capability includes evaporation in lined ponds, storage of clean water (reverse osmosis permeate) in clay lined ponds, treatment and disposal via surface discharge under a WYPDES permit, and deep well injection. Application has been made to WDEQ for additional deep injection wells for waste disposal at Irigaray, but no action has been taken to date on the request. Solid wastes (non-radioactive) are transported to an industrial landfill, and byproduct materials are transported to Pathfinder Mines Corporation's Shirley Basin tailings facility for final burial.

A restoration/decommissioning/reclamation surety for the overall project is maintained in the form of a letter-of-credit in favor of the State of Wyoming. The amount of the surety is re-calculated in August of each year, based on the status of the project. The last submitted estimate included the decommissioning cost for a completed MU 7, thus covering the initial activity involved in a restart. Since no actual production is projected to occur until 2009, the impacts of production will be accounted for in the next re-evaluation of the surety estimate (August, 2008). The most current surety estimate is included with this renewal application.

2.0 SITE DESCRIPTION AND CHARACTERISTICS

2.1 AREA LOCATION AND DESCRIPTION

The Irigaray and Christensen Ranch permit areas contain approximately 15,000 acres located within the southern portion of the Powder River Basin. The Powder River Basin is a part of the Great Plains physiographic province and is a structural and topographic basin of approximately 64,750 km^2 (25,000 square miles) located in eastern Wyoming and southern Montana. The basin is bounded on the east by the Black Hills and on the west by the Bighorn Mountains. Its southern boundary is the Laramie Range and Hartville uplift and the Miles City Arch in Montana forms the basin's northern extent. The most dominant topographic features within the area are the Pumpkin Buttes. The Christensen Ranch area lies at the base of the North Pumpkin Butte to the northwest and is dissected by the Johnson/Campbell County line with portions of the area in each county. The Irigaray project is located approximately 5 miles to the northwest of the Christensen permit boundary (see Figure 2.1). Surface configurations of the properties are characterized by rolling uplands which are dissected by sharp, deeply cut drainages. The primary drainage within both the Irigaray and Christensen Ranch permit areas is Willow Creek (an ephemeral tributary to the Powder River) which enters the southeast corner of each property and proceeds through each in a northwesterly direction to the Powder River. Most drainage in the area flows into Willow Creek via a series of sharply cut side drainages which are normally dry. Elevations range from 1300 m (4300 feet) where Willow Creek leaves the area in the far northwest corner of the Irigaray permit area to almost 1585 m (5200 feet) where the eastern boundary of the Christensen Ranch permit boundary crosses the toe of the North Butte slope. Table Mountain is the high point between the two projects, located in the western part of the Christensen Ranch property at 1482 m (4861 feet) and the higher elevation in the southern parts of the area are around 1518 m (4980 feet).

2.2 LAND AND WATER USE AND OWNERSHIP

Surface ownership of the projects is approximately half privately owned and the other half BLM and State lands. Oil and coal bed methane production are the other major mineral activities in the area.

2.2.1 AREA AND ADJACENT LANDS

The Irigaray and Christensen Ranch project lands have historically been used for livestock grazing by both sheep and cattle. The Christensen Ranch no longer has any sheep and presently the lands are used for cattle grazing and mineral exploration/development. The

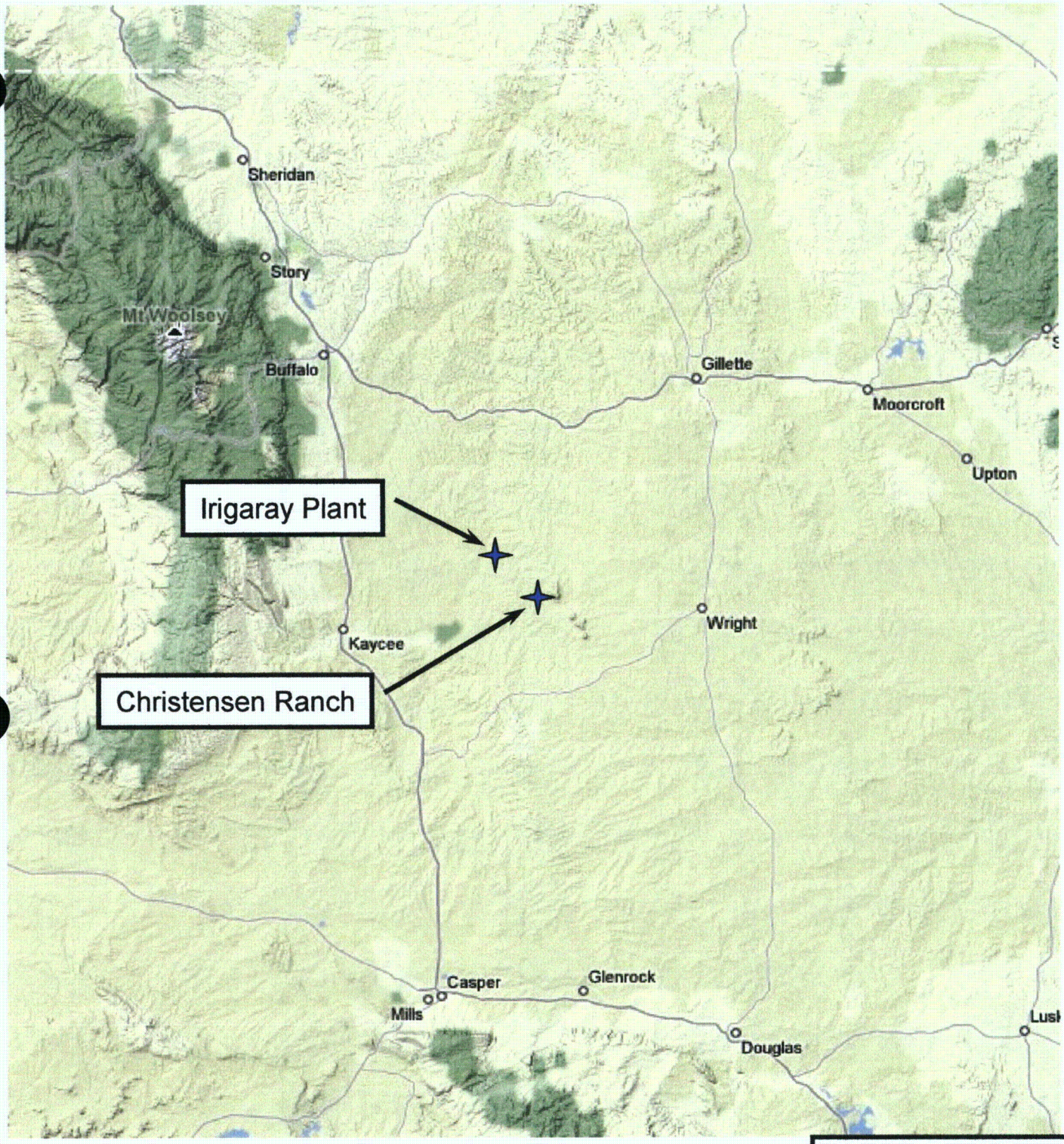

0 20 Miles 80 Miles

COGEMA MINING

Figure 2.1

Irigaray and Christensen Ranch Area

General Location Map

SUA 1341, May, 2008

use of the land for the immediate future includes in-situ uranium mining on a commercial scale (see Appendix D1 of the Irigaray and Christensen Ranch permit applications) and coal bed methane development. Presently, COGEMA holds leases and Federal lode claims for 1,847 acres at Irigaray and 7,894 acres at Christensen Ranch. Surface owner consent to develop commercial scale mines within the permitted areas has been obtained from the private landowners. Of the acres controlled by COGEMA, some 587 acres have been disturbed to date by project development (COGEMA annual report to WDEQ/LQD, August, 2007). Projected additional (future) disturbance at Christensen Ranch is estimated to total 541 acres. No further disturbance is projected at Irigaray unless additional wellfields are developed late in the life of the project. Subsequent to the mining activities the land will be returned to the pre-mining use of cattle grazing. The reclamation plan to be used to return the land to cattle grazing use after mining is included in Section 6 of this application. Names and addresses of the surface and mineral owners of record within the Irigaray and Christensen Ranch areas are given in each project's permit to mine applications in the Adjudication File, Appendix A. Names and addresses of the surface owners and mineral owners of record within one-half mile (.8 km) adjacent to the areas are also given in the Adjudication File, Appendix B. These appendices also list owners of record with valid legal estate in the permit areas and on adjacent lands. Appendix C of the Adjudication Files lists all lands included within permit areas by section, township and range and gives an acreage tabulation. The Christensen Ranch permit area contains approximately 14,000 acres, and the Irigaray permit area includes approximately 1,000 acres.

2.2.2 AGRICULTURE ACTIVITY

Livestock grazing is the main source of food production and agriculture activity in the area. Due to the short growing season the forage provided by natural vegetation, although nutritious, is very sparse. According to personnel from the U.S.D.A. Soil Conservation Service Office in Gillette, the stocking rate in the vicinity of the projects averages .28 (AUM), or animal units per acre per month, on range that is in good condition. Some of the better lands along Willow Creek in the northwestern portion of the Christensen Ranch project area are cut for native hay production. There is also a small hay field in the southeast corner of the Christensen Ranch project area where alfalfa and intermediate wheat grasses have been seeded for hay production. These areas average about 1 ton per acre and the hay is used for winter livestock feed. There are no known commercial row or grain crops within or adjacent to the projects.

2.2.3 RECREATION

The Irigaray and Christensen Ranch areas are not well suited for many recreational activities such as camping, fishing, picnicking, hiking, skiing and snowmobiling, which are most often done in the national forest areas of the Bighorn Mountains over 50 miles (80 km) to the west of the sites. The area does, however, get some use by antelope and deer hunters during fall hunting seasons.

2.2.4 WATER RIGHTS

Water rights of record were obtained from the Wyoming State Engineer's Office for the project areas and adjacent areas within three miles for the initial permitting in 1977 (Irigaray) and 1988 (Christensen Ranch). Groundwater rights of record are listed, mapped and discussed for each project in Appendix D6 of the individual mine permit application documents. They include established groundwater rights for several domestic wells, livestock wells, several miscellaneous wells and industrial wells in and adjacent to the project areas. Current lists of groundwater rights within the permit area and within three miles of the permit area are presented in Appendix A of this document.

Surface water rights of record are listed, mapped and discussed in Appendix D6 of each project's mine permit application. Surface water rights in the area are generally livestock related. They include several surface water reservoirs ranging in capacities from 8.4 to 402 acre feet. Most of these reservoirs are adjacent to the project areas. Current lists of surface water rights within the permit area and within three miles of the permit area are presented in Appendix A of this document.

2.2.5 PROTECTION OF OTHER MINERAL RESOURCES

Other mineral resources within the project area have not been affected by the ISL mining operations. Other uranium facilities in the vicinity are shown on Figure 2.2. Oil and gas production within and adjacent to the Christensen Ranch area include the Heldt draw unit of the Table Mountain oil field. There are 24 oil wells within the Christensen Ranch area; of these, 17 are currently producing and seven have been abandoned. There are no oil wells within the Irigaray project area. There are five coal bed methane (CBM) wells adjacent to Christensen Ranch MU 5 which were drilled in 2005. No production has occurred to date from these wells. There are three companies that plan on commencing CBM drilling in or adjacent to the permit area (both Christensen Ranch and Irigaray) later in 2008. COGEMA continues to work with owners of other mineral interests to obtain a mutually agreeable solution to any conflicts which arise. It is unlikely that any subsurface problems will be encountered with oil or gas wells because those in the area are much deeper than the uranium deposits. Potential hazards do exist with uranium well field installations around the oil field equipment, especially where oil and gas lines have been buried. In turn, future CBM development within or adjacent to existing COGEMA well fields presents potential hazards relative to buried pipelines and utilities. Appropriate considerations which include surveys of the buried equipment locations and well field engineering and planning in cooperation with the oil/gas field operators will be conducted so as to avoid potential hazards and conflicts in advance of well field installations or CBM drilling. Appendix B to this submittal consists of a discussion of potential CBM impacts on Christensen Ranch operations prepared by Hydro-Engineering, Casper, Wyoming.

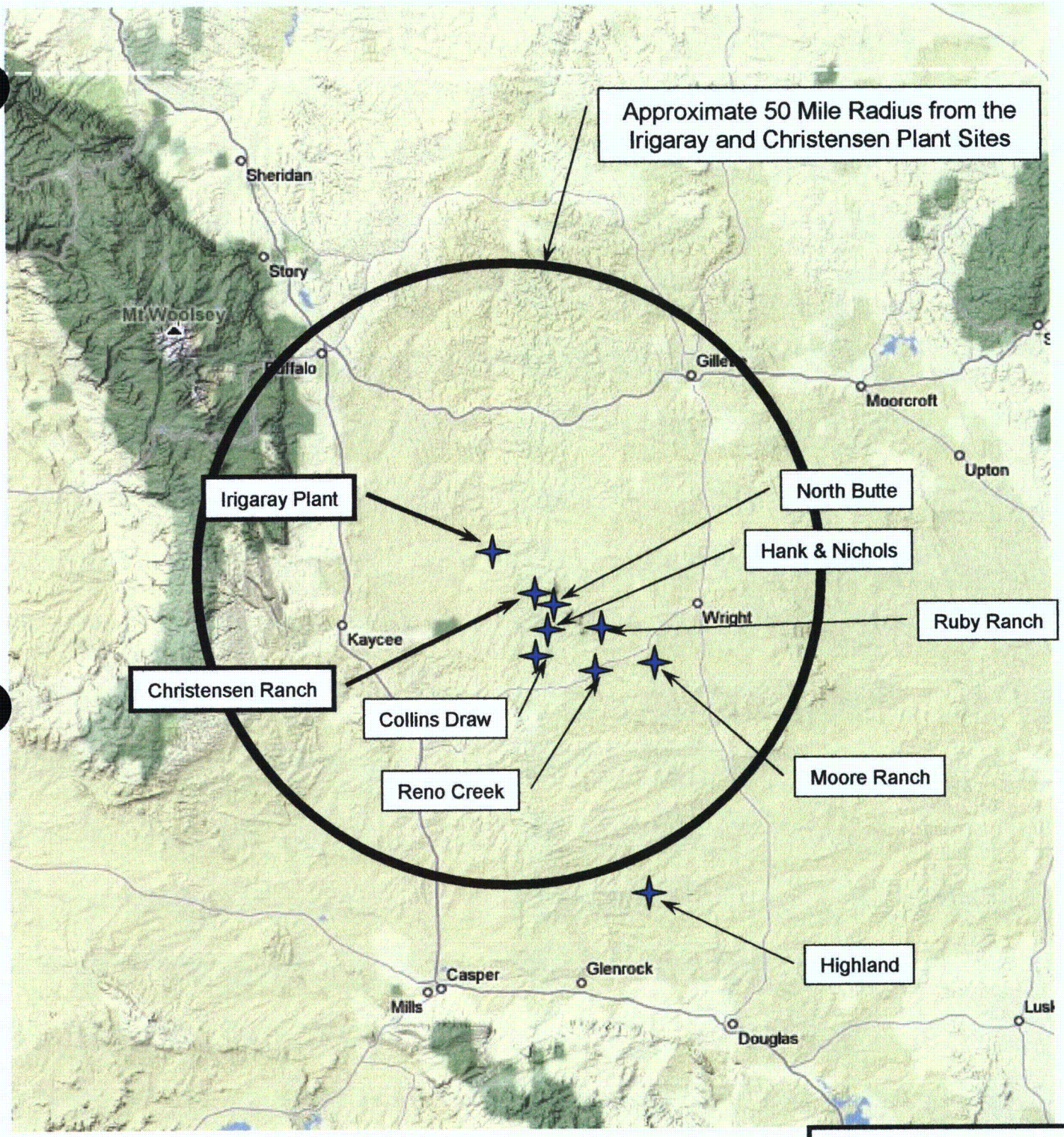

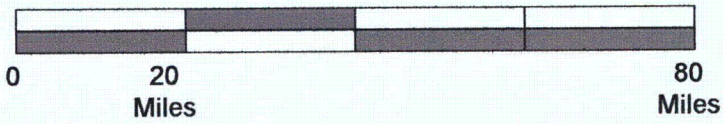

COGEMA MINING

Figure 2.2

Irigaray and Christensen Ranch Area

Population Centers Within a 50 Mile Radius

SUA 1341, May, 2008

2.3 REGIONAL DEMOGRAPHY AND SOCIOECONOMICS (POPULATION DISTRIBUTION)

2.3.1 DEMOGRAPHY

Both the Irigaray and Christensen Ranch areas are isolated from any significant population centers. The closest resident to the Christensen Ranch satellite plant site is the Christensen Ranch house and headquarters located approximately 3 miles southeast of the satellite plant site. The nearest residence to the Irigaray process plant is the Irigaray Ranch, located 4 miles to the north. There are five other known ranching operations scattered around the projects ranging from 4 miles to 14 miles straight line distance from each project's plant centers. These scattered ranch residences are typical of the ranch population in the Powder River Basin.

Additional populations surrounding the project areas are concentrated in small towns and settlements. Most of these are associated with local livestock interests, oil/gas production activities or coal mines in the area. Gillette, Buffalo, Kaycee, Midwest, Wright, and Edgerton are examples of towns or settlements within an 80 km (50 miles) radius of the site.

The vast majority of the population in the area is located within the larger towns. Figure 2.2 shows the locations of towns and settlements in relationship to an 80 km (50 miles) radius from each project's plant center. Populations of the nearby ranches, larger settlements, and towns are given in Table 2.1.

Transient population in the vicinity is primarily tourists who use the campgrounds, motels and other travel facilities along the main interstate highways. These include Interstate Highway 25 which is a north-south route between Casper and Buffalo, Wyoming, and Interstate Highway 90, an east-west route between Gillette and Buffalo, that provides access to the Bighorn Mountains, Yellowstone and Grand Teton National Parks in the western part of Wyoming.

Additionally, there are seven other uranium ISL operations proposed or located within a 50 mile radius of the Irigaray and Christensen Ranch projects. These operations are listed in Table 2.2.

2.3.2 SOCIOECONOMICS

There are three counties which have been affected to some degree by the Irigaray and Christensen Ranch operations. Although the project areas are located within Johnson and Campbell counties, the city of Casper, Wyoming, located in Natrona County, is the largest and closest industrial city to the site. Due to its industrial services and transportation facilities, COGEMA Mining, Inc. has established its operational headquarters in Casper.

TABLE 2.1

TABLE 2.2

OTHER URANIUM SOLUTION MINING OPERATIONS WITHIN A 50 MILE RADIUS OF THE IRIGARAY AND CHRISTENSEN RANCH PROJECTS[1]

Operation	Status & Date of Lic. Applic.	Direction and Distance from Christensen Ranch Plant
Cameco North Butte Project	Commercial ISL License Expansion (mid FY 09)	ESE 5 miles
Uranerz Energy Corp. Hank & Nichols Project	Commercial ISL Applic. New (submitted 12/07)	SSE 5 miles
Uranerz Energy Corp. Collins Draw	Commercial ISL Applic. New (FY 09)	SSE 11 miles
Uranium One Moore Ranch	Commercial ISL Applic. New (submitted 10/07)	SE 30 miles
Cameco Ruby Ranch	Commercial ISL Applic. New (FY 10)	ESE 14 miles
Strathmore Minerals Corp. Reno Creek Project	Commercial ISL Applic. New (FY 10)	ESE 21 miles
Power Resources, Inc. Highland Project	Commercial ISL License - operating -	SE 51 miles

[1]US NRC Website, Materials Facilities, Uranium Milling Facilities, Table: Expected Uranium Recovery Facility Applications/Restarts/Expansions, March 31, 2008.

The majority of all site employees (projected at 39 when operating) reside or will reside in Buffalo, Casper, Kaycee, Midwest, or Gillette, Wyoming. There are no other plants, schools, hospitals, sports facilities, parks or residential areas within 3.3 km or two miles of the project areas. According to the most recent county and community profile information from the Gillette-Campbell County, Buffalo-Johnson County and Casper-Natrona County areas, the majority of these services are contained within the three communities named, each of which is the county seat for the respective counties.

There are three county-wide school districts servicing the general population that provides workers at the Irigaray/Christensen Ranch project. Johnson County School District No. 1 had student enrollment of 1,274 in October, 2007, compared to 1,336 in 1998. Campbell County School District No. 1 had an October, 2007 enrollment of 7,589 versus 7,710 in 1998. Natrona County School District No. 1 had 11,604 students in October, 2007 compared to 12,271 in 1998. Most recent data for student to teacher ratios is from late 2006: Johnson County = 10.76; Campbell County = 14.83; and Natrona County = 13.90. Data on school districts enrollment is from the Wyoming Department of Education website, Data Collection and Education Statistics. With declining enrollments and low student to teacher ratios, it appears that the local school systems could readily absorb the minor number of additional students due to an increase of the labor force at Irigaray/Christensen Ranch. The anticipated increase of workers at the site with a resumption of operations would only be twenty-seven, most of which would already be residents of the three county region.

The closest medical facility to the projects is the 90 bed Campbell County Memorial Hospital located at Gillette, 43 miles to the north northeast of the Christensen Ranch. The Johnson County Memorial Hospital at Buffalo, 55 miles northwest of Irigaray, has a 29 bed capacity. There are 8 doctors and 3 dentists in the Buffalo area serving Johnson County and some 52 doctors and 17 dentists in the Gillette Campbell County area.

Based on the 2000 Census, there were 3,503 housing units in Johnson County, including Buffalo. 544 of those housing units were vacant, resulting in a homeowner vacancy rate of 1.8% and a rental vacancy rate of 3.8%. Also based on the 2000 Census Campbell County, including Gillette, had 13,288 housing units, of which 1,081 were vacant. The Campbell County homeowner vacancy rate was 1.2% while the rental vacancy rate was 9.0%. Since year 2000 there has been an overall strengthening of the economy, primarily due to a boom in the energy sector. Consequently, current overall housing vacancy rates can be assumed to be less than what was experienced in 2000.

Major industries listed for Johnson County include tourism, agriculture and oil/gas production, while Campbell County's major industries are coal mining, oil and gas production and agriculture. In November, 2007 Johnson County had a total labor force of 3,874 while Campbell County and Natrona County had labor forces of 26,155 and 40,493, respectively. Unemployment rates in November, 2007 were 3.6%, 2.1%, and 2.6% for Johnson, Campbell, and Natrona Counties, respectively. Labor force and unemployment

rate information is quoted from the Wyoming Department of Employment website, Local Area Unemployment Statistics.

2.5 CLIMATOLOGY AND METEOROLOGY

2.5.1 GENERAL AREA CHARACTERISTICS

The Irigaray and Christensen Ranch areas are classified as a semi-arid continental climate. Meteorological data collection sites operated by the National Oceanic and Atmospheric Administration (NOAA) in the vicinity of the area include: Midwest - 30 miles SW, Kaycee - 31 miles W, Gillette - 43 miles NE, Buffalo - 51 miles NW, and Casper - 68 miles SW. Records from these locations provide general long term weather data for areas surrounding the sites.

This regional data may be supplemented by meteorological data collected at industrial sites, primarily coal mines located east of the Christensen Ranch and generally south of Gillette. Meteorological monitoring was conducted at Irigaray for one full year, December 1980 through December 1981. This data provides insight to local conditions and has served as the primary source of meteorological information for the Irigaray and Christensen Ranch projects. Copies of the two semi-annual meteorological reports for the Irigaray Mine are provided for review in Appendix D4 of the Christensen Ranch permit application. No onsite meteorological data collection was required or done since the early 1980s. The historical meteorological data for the area was summarized in the "Permit to Mine No. 478, A-2 Update and U.S. NRC License Renewal Application: Source Material License SUA-1341, January 5, 1996." That summary found in Sections 2.5.2 through 2.5.5 of the

January, 1996 renewal document (pages 2-16 to 2-25, 2-26, and 2-27) will not be repeated here, but is incorporated by reference.

2.6 GEOLOGY AND SEISMOLOGY

2.6.1 REGIONAL GEOLOGY

The regional geology associated with the Irigaray and Christensen Ranch project areas was thoroughly discussed in "Permit to Mine No. 478, A-2 Update and U.S. NRC License Renewal Application: Source Material License SUA-1341, January 5, 1996." The reader is referred to Section 2.6.1 of that document (pages 2-25 and 2-28 to 2-29 for a discussion of the regional geology.

2.6.2 SITE GEOLOGY

The site geology associated with the Irigaray and Christensen Ranch projects was thoroughly discussed in "Permit to Mine No. 478, A-2 Update and U.S. NRC License Renewal Application: Source Material License SUA-1341, January 5, 1996", as revised September 3, 1997. The reader is referred to Section 2.6.2 of that document (pages 2-29 to 2-33 for a discussion of the site geology.

2.6.3 SEISMOLOGY

The seismology associated with the Irigaray and Christensen Ranch projects was discussed in "Permit to Mine No. 478, A-2 Update and U.S. NRC License Renewal Application: Source Material License SUA-1341, January 5, 1996", as revised September 3, 1997. The reader is referred to Section 2.6.3 of that document (page 2-33 for a discussion of the site seismology.

2.7 HYDROLOGY

2.7.1 GROUNDWATER

Extensive investigation of the groundwater systems at the Irigaray and Christensen Ranch project areas were conducted to assess the impact of the proposed in-situ mining activities during initial permitting. The studies included a review of the hydrogeology of the area, extensive aquifer testing and field sampling to determine water quality. At Christensen Ranch, initial investigations included the "L" sandstone (underlying aquifer), lower confining layer, the "K" sandstone (mineralized zone), upper confining layer and the "J" sandstone (overlying aquifer). Potentiometric surfaces were developed for each aquifer and recharge and discharge areas were researched. There were nine aquifer - aquitard investigations performed at six test sites within the Christensen Ranch permit area to define aquifer characteristics. There were 10 horizontal permeability tests performed within the "K" sandstone at different

locations within the permit area, to confirm permeability values calculated from pumping test data. Water quality was determined for the "K" sandstone, or mineralized aquifer, and the next overlying and underlying aquifer through a quarterly field sampling program using some 27 different wells at 10 different hydrologic test sites on the permit area. The water chemistry of the 3 aquifers sampled is summarized in Appendix D6 of the Christensen Ranch permit application.

Groundwater test site locations, methods and results of the aquifer tests and water quality sampling program for both Irigaray and Christensen Ranch are provided for review in Appendix D6 of each project's permit application.

In addition to the initial groundwater investigations done for permitting at each site, numerous hydrologic studies have been conducted at each site for the approval of individual production wellfields. These studies include detailed aquifer/aquitard properties analysis, confirmation of monitor well communication through pumping, and the sampling and water quality analysis of all monitor wells and ore zone restoration wells (baseline water quality wells). At Christensen Ranch, the following additional hydrologic and water quality investigations have been performed, and submitted to the DEQ and NRC on the following dates:

Mine Unit 2 South - November, 1992 (detailed aquifer analysis and baseline water quality)
Mine Unit 2 North - April, 1992 (detailed aquifer analysis and baseline water quality)
Mine Unit 3 - December, 1988 (baseline water quality)
Mine Unit 3 expansion - August, 1991 (baseline water quality)
Mine Unit 3 module 2 and 4A expansion - October, 1993 (baseline water quality)
Mine Unit 4 - April, 1994 (detailed aquifer analysis and baseline water quality)
Mine Unit 5 - February, 1995 (detailed aquifer analysis and baseline water quality)
Mine Unit 6 – September, 1996 (detailed aquifer analysis and baseline water quality, revised December, 1996)

In addition to the original hydrologic evaluations at the Irigaray property, the following hydrologic and water quality investigations have been performed, and submitted to the DEQ and NRC on or about the following dates:

Groundwater Properties of Production Units 6 through 9 - September, 1987
Groundwater Properties, 5I7 Test Site - November, 1987
Aquifer-Aquitard Characterization Production Units 2 and 3 - August, 1986
Aquifer-Aquitard Characterization Section 5 Test Site - March, 1987
Predicted Pumping Rates and Time for Restoration Sweep, Irigaray Units 1-9 - June, 1990
Production Unit 6 - April, 1988
Production Unit 7 - November, 1987
Production Unit 8 and 9 - January, 1988

All of the above studies previously submitted to the NRC and DEQ confirm and

substantiate the baseline hydrologic conditions established and discussed in Appendix D6 of both the Irigaray and Christensen license applications. This includes groundwater hydrologic characteristics such as directional gradient, transmissivities, permeabilities, storage coefficients, and the strong vertical anisotropy of the host K sandstone. All of the hydrologic testing conducted since the original application support the following generalizations:

- When stressed, the host K Sandstone and Upper Irigaray Sandstone responded as a single hydraulic unit with strong directional anisotropy.

- Monitoring of the overlying and underlying aquifers did not demonstrate any hydraulic connections to the K Sandstone. The lack of response attributable to the pumping of the K Sandstone indicates the presence of vertical isolation of the overlying and underlying aquifers.

- The confining layers separating the K Sandstone from other water-bearing strata act as continuous, low permeability barriers within each mine unit tested.

Groundwater quality data collected since the last license renewal has also been confirmed and substantiated to be essentially the same as that identified in Appendix D6 of the original applications. Groundwater generally tends to be classed as sodium-sulfate in the eastern half of Christensen Ranch, trending towards sodium bicarbonate in the western half of the licensed area. Irigaray groundwater is primarily sodium bicarbonate based. Although total dissolved solids concentrations in the western half of Christensen and all of Irigaray tend to average below drinking water standards, the water cannot be considered potable within the ore zones due to excessive concentrations of radium-226 and radon gas. Groundwater in the eastern half of Christensen demonstrates elevated levels of sodium-sulfate which cause the total dissolved solids concentrations to be greater than drinking water standards. In these areas (Mine Units 5, 6, and 7), the water is classified by the State of Wyoming as Class IV, Industrial Use.

To date groundwater usage in the vicinity of the Irigaray and Christensen Ranch license areas has not changed since the original issuance of the license. Groundwater usage has been limited to agricultural use (livestock), industrial use (uranium in situ mining, oil and gas development), and limited domestic use (Christensen Ranch house and Irigaray Ranch house). There are no new domestic or livestock developments in the area as the properties are located on the large Christensen and Irigaray ranches. With the completion of five coal bed methane (CBM) wells (as yet not produced) in the immediate vicinity of COGEMA's Christensen Ranch operations and plans to install a substantial number of CBM wells over the next few years in the vicinity of both Irigaray and Christensen Ranch, there will be significant changes to groundwater use in the general area, but the CBM groundwater withdrawals are not anticipated to have a significant impact on the Wasatch aquifer, the zone of completion for COGEMA's wells and local ranch wells. See Appendix B to this submittal.

2.7.2 SURFACE WATER

Surface water characteristics for the Irigaray project are described in Section D6 of the Irigaray permit application document. The descriptions are rather general, due to the relatively small size of the Irigaray project (less than 1,000 acres). Willow Creek, considered an intermittent stream, crosses the permit area to the north, and is the only surface water feature in the immediate vicinity of the permit area. Willow Creek flows northwesterly from the edge of the Irigaray permit area approximately two miles before its confluence with the Powder River. Water quality and available hydrologic characteristics for both Willow Creek and the Powder River are given in Section D6 of the Irigaray application document.

Regional and site specific surface water studies were conducted to develop quantitative and qualitative data and to assess the potential impact of the proposed mining operation on the surface water and drainage system within the Christensen Ranch permit area. The drainages basins within and adjacent to the area were mapped and described. They include 18 watersheds of the Willow Creek drainage basin which provide surface drainage for the majority of the area. Surface water bodies in the permit area and adjacent to it were characterized including Willow Creek, its primary tributaries and permanent stockponds. Drainage channel profiles were constructed for Willow Creek and its major tributaries.

Results indicate that drainages in the Christensen Ranch project area are ephemeral. Intermittent surface water occurs only in the extreme north west portion of the permit area. Flood frequency analyses were calculated from field data and indicate a range of flood events for the watershed.

Surface water quality was sampled along Willow Creek and its major tributaries. Appendix D6 of the Christensen permit application provides the surface water quality data. Drainage basin characteristics are also provided for review in Appendix D6, as well as sedimentation as related to the ongoing mining disturbance.

2.8 ECOLOGY (SOILS, VEGETATION AND WILDLIFE)

2.8.1 TERRESTRIAL ECOLOGY

A baseline soil study was conducted on the Christensen Ranch permit area during the fall of 1986. Soils were surveyed and sampled to the Order 1 level (approximately 8,548 acres) over the ore trend, proposed construction areas and along a 2,000 foot buffer zone, some of which could potentially be affected by mining activities. The remainder of the permit area (approximately 5,229 acres) was mapped at the Order 3 level. Soil investigations were conducted in accordance with Wyoming Department of Environmental Quality Guideline No. 1 (November 1984). The objective of this study includes the identification of quantitative and qualitative soil characteristics on the area for use in surface reclamation programs after mining has been concluded. Soils in the permit area generally pose no special problems and are rated as good for reclamation purposes. Area soils were correlated with U.S. Soil Conservation Service soil series criteria. There were 27 soils mapping units identified and soils ranged from shallow undeveloped to very deep well-developed soils which are characteristic of the area within the Powder River Basin where the Christensen Ranch permit area is located. The soils study also confirmed that there is no prime farmland in the area. Results of the study are provided for review in Appendix D7 of the Christensen permit application.

For the original Irigaray application, soil surveys were performed by the Soil Conservation Service (1977). Only the areas where building or pond construction was planned were sampled in any detail. In 1980, a new soil survey was conducted by Mine Reclamation Consultants, on non-disturbed areas adjacent to the wellfield areas, ponds and plant site. The new survey covered approximately 1,627 acres within and outside of the permit boundary. This survey is included in Appendix D7 of the Irigaray permit application, specifically in Attachment D-5.

In summary, fifteen soil map units comprised of nine soil series were delineated on the Irigaray survey area. Typical profiles were described and soil samples were obtained from pits representative of each soil series. As a result of the evaluation of the field laboratory data, the soils were placed in four suitability classes. Most of the surface and subsurface soil horizons rated fair to good as a source of topsoil material. Available topsoil generally increases from steeply sloping ridge top areas with 6 to 12 inches of suitable material to about 5 feet of good material in relatively level, low land areas. The survey also confirmed that there is no prime farm land within the Irigaray permit area.

Vegetation at both the Irigaray and Christensen Ranch areas is a typical northern plains short grass prairie forage characteristic of areas of low annual precipitation. Dominant plant species present are sagebrush, Western wheatgrasses, needlegrasses, Blue grama and Threadleaf sedge. Baseline vegetation field studies were conducted on the Christensen Ranch permit area during the fall of 1986 and spring of 1987. Principal tasks were to identify major vegetation types, determine vegetative species composition and

estimate vegetative cover and frequency. A composite reference area not to be disturbed by mining was selected as the basis for determining success of reclamation after mining. There were eight vegetation and land use types identified by the study and a total of 258 plant species identified on the study area. Vegetation in the permit area and one-half mile adjacent to it was mapped. There were no threatened or endangered plant species observed, however, seven noxious weed species and five primary selenium indicator species were encountered. A discussion of the grazing history on the study area was included. Results of the vegetation study are provided for review in Appendix D8 of the Christensen Ranch permit application.

In the original Irigaray permit application (1977), quantitative vegetation baseline data was not available for the permit area. Much of the permitted area was previously disturbed, therefore vegetation data from a study in T44N, R77W was presented. In 1979, a new vegetation study was performed on and adjacent to the Irigaray permit area. The study area encompassed approximately 4,700 acres within and adjacent to the permit area. Quantitative baseline data included cover, production density, species composition and frequency. Reference areas were also established. The results of this study are included in Appendix D8 of the Irigaray permit application, Attachment D-6.

A four season baseline wildlife study was conducted on the Christensen Ranch permit area and adjacent areas to evaluate any potential adverse impacts to the native fauna. The only species of commercial value in the vicinity are domestic, principally range cattle. Wildlife species with some recreational value include the pronghorn antelope, mule deer, cottontail rabbit, sage grouse and mourning dove, which are hunted. Non-game species are typical of the sage brush grassland habitat in the region. Searches for threatened and endangered wildlife were conducted. The only potential conflict identified was with the nesting site of a golden eagle pair, a species of high Federal interest. A special study was commissioned in 1987 to evaluate the potential for mining activities conflicting with the eagle pair. The results of the wildlife baseline study and golden eagle study are included in Appendix D9, as are discussions of other potential impacts and mitigation measures for wildlife during the mining operation.

Wildlife species at the Irigaray project site are very much the same as found on the Christensen project site, and are described in detail in Appendix D9 of the Irigaray permit application.

COGEMA annually conducted wildlife surveys on and proximate to the permit area for a number of years. The surveys consisted of big game surveys, sage grouse lek censuses, and nesting raptor surveys. The accumulated data showed no impacts attributable to the mine operations. Due to the termination of mining activities and the initiation of restoration/reclamation activities exclusively in 2001, all wildlife monitoring had been suspended. The big game surveys are permanently terminated. Anticipating a return to mining, wildlife surveys were reinitiated in 2007 and 2008. Sage grouse and raptor surveys have been conducted. Additionally, big game surveys were also performed despite the

deletion of that requirement. The 2007annual wildlife survey report is included with this submittal as Appendix C. In future years big game surveys will not be done.

Preparatory to the resumption of mining, COGEMA also commissioned an update report in early 2008 on the occurrence of threatened or endangered species of plants and animals in the vicinity of the mine permit area. No threatened or endangered species were identified in the recent re-evaluation. The report is included here also in Appendix C.

2.8.2 AQUATIC ECOLOGY

There is very little potential for aquatic life on the Irigaray and Christensen Ranch areas due to the intermittent and ephemeral nature of the drainage and relatively little surface water in the form of lakes or ponds. Two species of minnows, the plains minnow, Hybognathus placitus, and flathead minnow, Pimephales promelas, were trapped from the Willow Creek drainage in the northwest portion of the Christensen Ranch permit area. There are no known species of game fish in the immediate vicinity. Other aquatic life either observed or which could potentially occur on the area are listed in Appendix D9 of the Christensen Ranch permit application.

2.9 BACKGROUND RADIOLOGICAL CHARACTERISTICS

The reader is referred to Section 2.9 (pages 2-38 to 2-47) of "Permit to Mine No. 478, A-2 Update and U.S. NRC License Renewal Application: Source Material License SUA-1341, January 5, 1996" for a discussion of background radiological characteristics of the Christensen Ranch permit area.

2.10 BACKGROUND NON-RADIOLOGICAL CHARACTERISTICS

Background non-radiological characteristics of the site are discussed in depth in the applicable sections of Appendix D in both Irigaray and Christensen Ranch permit applications. Potentially toxic substances such as heavy metals in the surface and groundwater are presented in Appendix D6, Hydrology. Baseline water quality values for both surface and groundwater are also provided. Because of the relatively small surface disturbance necessary to construct the ISL facilities, very little atmospheric pollution in the form of dust and air particulates is produced. A significant change to the existing air quality in the vicinity is not anticipated.

3.0 DESCRIPTION OF PROPOSED OPERATIONS

In the past, COGEMA Mining, Inc. has operated the Irigaray central processing facility and associated well fields plus a satellite ion exchange plant and well fields located at the Christensen site. All existing well fields at the Irigaray site have been mined out and have undergone aquifer restoration. The "Wellfield Restoration Report, Irigaray Mine, July 2004" was submitted to WDEQ/LQD on July 26, 2004. DEQ issued in a letter to COGEMA dated November 1, 2005, a determination that the groundwater, as a whole, had been returned to its premining class of use, and authorized the abandonment of wells within the wellfields. The NRC concurred with DEQ's determination in a letter to COGEMA dated September 20, 2006. Mining and aquifer restoration have been completed in Mine Units 2 through 6 at the Christensen satellite operation. The "Wellfield Restoration Report, Christensen Ranch Project, Wyoming, March 5, 2008" was submitted to WDEQ/LQD and the NRC on April 8, 2008. Even though the recently submitted restoration report documents the restoration of MU 5 at Christensen Ranch, COGEMA is continuing to evaluate the potential for additional mining in MU 5.

Over 99% of the wells at Irigaray have been plugged and abandoned subsequent to the DEQ/LQD approval of the aquifer restoration for Irigaray. Over 60% of the pipelines that serviced the Irigaray well fields have been removed. Major components of the Irigaray processing plant have also been decommissioned and removed. At this juncture the only operable portions of the Irigaray plant consist of the elution, precipitation, drying, and packaging components. Future operations at Irigaray will consist of the continuation of plant activities for the processing of the Christensen ion exchange resins (elution), uranium precipitation, yellowcake drying, packaging and shipping. Eventually, additional mining is possible (but is not currently scheduled) at the Irigaray site within the current permit boundary plus areas to the north and south of the permit boundary. The Irigaray plant would require a major refurbishment to support any future Irigaray mining. The timing of the possible resumption of mining at Irigaray is discussed in more detail later within this chapter.

Future operations at Christensen will consist of continued well field installation and operation. In the original plan for Christensen, four satellite plants were anticipated for installation and operation. It is now planned that the entire Christensen ore body will be mined through the use of the one existing satellite plant connected to the various well fields by injection and recovery trunklines. This system worked well during operations in Mine Units 2 through 6. Booster pump stations are necessary along the trunklines to help move the solutions over the distance to and from the satellite plant. The current annual average capacity of the satellite plant is 4,000 gpm.

Mining operations at Christensen will continue with Mine Unit 7 (subject to LQD

approval), located in the North Prong geographical area of the Christensen permit boundary, and with a possible re-entry into Mine Unit 5. After Mine Unit 7, well fields will progress to either the Heldt Draw or Table Mountain geographical areas for Mine Units 8 through 12. The development schedule is discussed in more detail later within this chapter. The major components of the combined Irigaray and Christensen Ranch in-situ mining operations are: 1) the orebody; 2) the well fields; 3) the lixiviant injection circuit; 4) the uranium extraction circuit; 4) uranium precipitation, drying and packaging (Irigaray only); 6) wastewater management systems; and 7) aquifer restoration and surface reclamation. The physical descriptions and operating characteristics of these components and processes are provided in detail in the following sections. Wastewater management systems and aquifer restoration/surface reclamation are described in detail in Sections 4.0 and 6.0, respectively.

3.1 SITE DESCRIPTION AND FACILITIES LAYOUT

3.1.1 IRIGARAY SITE

The Irigaray site is located in Johnson County, approximately 90 miles NNE of Casper, Wyoming. The current operation consists of a 30-acre well field (undergoing decommissioning), uranium recovery plant with dryer, a well field restoration building, five evaporation ponds for wastewater disposal (the liners and any underlying contaminated soil have been removed from four of these ponds), and two restoration water storage ponds (one of which has had the liner and any underlying contaminated soil removed). The original pilot scale operation (517 test site) has been entirely decommissioned and the site reclaimed. The estimate of total acreage disturbed to-date by the Irigaray operations is approximately 133 acres.

The Irigaray portion of the WDEQ Permit No. 478 boundary encompasses 671.19 acres. The Irigaray property (mining claims, leases, etc.) consists of approximately three square miles within T45N, R77W and T46N R77W. The current mine permit area is located in portions of Sections 5, 8, 9 and 16 of T45N, R77W. Primary access roads are located in Sections 19, 29, 30 and 32, T46N, R77W as well as Sections 4, 5 and 9 of T45N, R77W.

The Irigaray processing plant will continue to serve as the uranium recovery plant for the Christensen Ranch satellite facility. The Irigaray Mine site is located about 13 road miles from the Christensen Ranch satellite plant location. The Irigaray plant site is located in Section 9 of Township 45 North, Range 77 West, Johnson County, Wyoming. The location of the Irigaray plant site in relation to the Christensen Ranch permit area, satellite plant site and the access road connecting the two facilities is shown on Figure 3.1 (in pocket). Figure 3.2 (in pocket) provides a facilities location map of the Irigaray permit area.

3.1.2 CHRISTENSEN RANCH SITE

The Christensen Ranch permitted area is an irregular shaped but contiguous land unit which encompasses 14,035.19 acres in Townships 44 and 45 North, Ranges 76 and 77 West in Johnson and Campbell Counties, Wyoming. Originally, the permit area was divided into four phases for the purposes of mine planning, with a satellite operation planned in each phase. This is no longer the case, as all well field development areas can be reached from the current satellite plant through trunkline connections. Existing facilities at Christensen include the satellite ion exchange plant and restoration facility, four lined brine evaporation ponds, one unlined permeate storage pond, two deep injection disposal wells and well fields consisting of Mine Units 2, 3, 4, 5, and 6, an office building, and warehouse. A second permeate storage pond is licensed, but not currently scheduled for construction. A number of wells had been installed in planned Mine Unit 7 in the mid 1990's.

Figure 3.1 shows the location of the Christensen Ranch permit area, in relation to the Irigaray site. The well field development areas shown in Figure 3.1 consist of the North Prong geographical area (Mine Unit 6 and future Mine Unit 7), the Heldt Draw area (future Mine Units 8 and 9) and the Table Mountain area (future Mine Units 10, 11 and 12). Existing Mine Units 2, 3, 4 and 5 are located in the Willow Creek geographical area. The development sequences for these areas are described in more detail in Section 3.7 of this chapter.

Figure 3.3 (in pocket) shows a detailed location map of all existing facilities at Christensen. The total estimate of acreage disturbed by existing operations is 454 acres. This acreage consists of approximately 14 acres for the plant and pond facilities, 275 acres of well field, pipeline corridors and staging areas, 36 acres of access roads, 10 acres of soil stockpiles (topsoil and subsoil), and 119 acres relating to future mine units delineation drilling, deep disposal well construction, and other miscellaneous facilities. Table 3.1 summarizes the potential disturbances for the remainder of the Christensen Ranch development areas.

In summary, the new estimate of lands to be disturbed during all mining operations within the Christensen Ranch area totals approximately 930 acres. The total disturbance is only 7% of the 14,035.19 acres within the entire permit area. The size and configuration of the permitted area is necessary to encompass access roads, monitoring locations and mining claims for potential development areas.

TABLE 3.1
ESTIMATED MINING DISTURBANCE BY DEVELOPMENT AREA
CHRISTENSEN RANCH

DEVELOPMENT AREA	LOCATION	DISTURBED AREA DESCRIPTION TYPE	ACRES	DISTURBED AREA (acres)	1988 ORIGINAL PERMIT ESTIMATE (acres)
Willow Creek (Existing Facilities)	T.44N., R.76W.: Secs. 5: W ½; 6,7,8: W ½; 17,18,19 & 20	Plant & Pond Facilities	19		
		Wellfield Mine Units 2-5	84		
		Peripheral Disturbance*	137		
		Access Roads	31		
		Soil Stockpiles	7	278	388
North Prong	T.44N., R.76W.: Secs. 3: W ½ W ½; 4,5: E 1/2; 8: E ½; 9,10: W ½ W ½; 16 & 21	Trunkline Access to Plant	10		
		Wellfield Mine Units 6 & 7	100		
		Peripheral Disturbance	140		
		Access Roads	30	280 (estimate)	518
Heldt Draw	T.45N., R.76W.: Secs.19: S ½ S ½; 30,31 & 32: SW ¼	Trunkline Access to Plant	10		
		Wellfield Mine Units 8 & 9	65		
	T.45N., R.77W.: Secs. 24: S ½ S ½; 25: N ½ N ½ SW ¼, SE ¼	Peripheral Disturbance	91		
		Access Roads	30	196 (estimate)	361

* Includes pipeline corridors, monitor well roads, wellfield roads, staging areas, and misc. disturbance associated with the wellfields and plant operations.

TABLE 3.1

ESTIMATED MINING DISTURBANCE BY DEVELOPMENT AREA
CHRISTENSEN RANCH
(continued)

DEVELOPMENT AREA	LOCATION	DISTURBED AREA DESCRIPTION TYPE	ACRES	DISTURBED AREA (acres)	1988 ORIGINAL PERMIT ESTIMATE (acres)
Table Mountain	T.44N., R.77W.: Secs. 1,2,3, 10: N ½; 11: N ½; 12: N ½ T.45N., R.77W.: Secs. 34: S ½ N ½, S ½; 35: S ½ N ½, S ½	Trunkline Access to Plant	10		
		Wellfield Mine Units 10, 11 & 12	75		
		Peripheral Disturbance	105		
		Access Roads	30	220 (estimate)	434

Christensen Ranch Permitted Area	(acres)	=	14,080
1988 Estimate of Disturbance	(acres)	=	1,701
2008 Estimate of Disturbance	(acres)	=	974

3.2 DESCRIPTION OF THE OREBODIES

3.2.1 ORE BODY

Uranium deposits amenable to solution mining are generally associated with relatively shallow aquifers which are confined by impermeable stratigraphic units. Uranium was transported to these locations as a soluble anionic complex by the natural movement of oxygenated groundwaters. Uranium deposition occurs in areas where chemical conditions change from an oxidizing to a reducing state. This condition produces a roll front deposit with uranium concentrated at the interface between the oxidized and unoxidized sandstones. This interface is commonly called the redox interface.

The orebodies at both the Irigaray and Christensen Ranch projects are typical roll front deposits. Uranium minerals occur as sand grain coatings and interstitial fillings in medium to fine-grained sandstones and arkosic sandstones of the Eocene Wasatch Formation. The uranium was derived from volcanics and granitic detritus by oxygen containing waters which leached and transported it via aquifers to where the oxidation potential of the groundwater was overcome by the reducing conditions in the aquifer. At that point, the uranium and some other dissolved metals became insoluble and precipitated as coatings and interstitial fillings in the aquifer.

The redox interface is more commonly termed a roll front. The roll front is actually a zone but relative to the broad extent of the aquifer; it is quite confined. This zone is represented by a sinuous and narrow area in plain view along which the commercial uranium occurrences are found as discontinuous masses. The roll fronts are found in more than one layer of an aquifer particularly where that aquifer is broken up by stratigraphic units (mudstones and/or siltstones) which are relatively impervious to the passage of groundwater. The roll fronts, therefore, converge and diverge causing variations in the concentrations of uranium in a given area. Detailed geologic characterization of the Irigaray and Christensen Ranch areas is provided in Appendix D5, Geology, of each permit application.

3.2.2 RESERVE ESTIMATES

Reserve estimates are calculated from exploration drill holes, as well as ore body delineation holes drilled during well field installation. Recent ore reserve evaluations have demonstrated that in today's market, approximately 9 million pounds of reserves exist on the Christensen Ranch project, with an additional 7 million pounds of reserves present on the Irigaray property. Previous ore reserve calculations for Christensen Ranch identified up to 34 million pounds of uranium using lower grade-thickness cutoff, which is not economical in today's uranium market.

3.2.3 MINE UNIT LOCATIONS

Each mine unit at Christensen is sized to recover approximately 1 million pounds of uranium. Assuming 50% to 60% recovery of the in-place reserves, each production unit could contain up to 2 million pounds of uranium reserves. The mine unit locations are described as follows:

	Section and Subdivision
Past Operating Units:	
Unit 2	Section 6 - NW 1/4 and SE 1/4 , T44N, R76W
Unit 3	Section 7 - N 1/2 and SE 1/4, T44N, R76W
Unit 4	Section 7 - SE 1/4, Section 18 - NE 1/4 and SE 1/4, T44N, R76W
Unit 5	Section 17 - SE 1/4, Section 20 - NE 1/4, Section 21 - NW 1/4, and Section 16 - W 1/2, T44N, R76W
Unit 6	Section 4 - W 1/2, Section 9 - W 1/2, T44N, R76W
Planned Units:	
Unit 7	Section 4 - E 1/2, Section 3 - W 1/2, Section 9 - E 1/2, Section 10 - NW 1/4, T44N, R76W
Unit 8	Section 25 - E 1/2, T45N, R77W; Section 30 - W 1/2, T45N, R77W
Unit 9	Sections 30 and 31, T45N, R76W
Units 10, 11,12	Sections 34 and 35, T45N, R77W; Sections 1 and 2, T44N, R77W

Exact locations of planned units will depend upon mine planning within the above areas.

3.3 WELL FIELD DESIGN, CONSTRUCTION AND OPERATION

3.3.1 WELL FIELD DESIGN

3.3.1.1 Pattern Types - Past and Current

During past operations at Irigaray and Christensen Ranch, well fields were sized so that each mine unit was capable of supplying a flow rate of 2500 gpm to the processing plant. Uranium recovery ranged from 300,000 to 500,000 pounds per mine unit.

Newer mine units, such as Units 4, 5, and 6 at Christensen Ranch, and future mine units are designed to recover approximately 1,000,000 pounds of uranium each. Final boundaries of future mine units will be verified during the actual well field installation.

When designing a well field, development holes are drilled perpendicular to the strike of mineralization. Ore grade and thickness are determined by gamma logging. Data from the development holes is then evaluated to determine minable areas. Development holes are then completed as either injection or recovery wells. Any sub-economic grade holes are sealed with abandonment mud or cement slurry.

Mine units consist of groups of cells or well patterns installed to correspond to the geometry of the orebody. Well patterns include five-spot patterns, alternating line drives and staggered line drives depending on the size and shape of the deposit. The tendency of the roll fronts to change direction abruptly typically result in irregularity of the pattern shapes.

A single five-spot pattern is roughly rectangular and consists of four injection wells surrounding one center recovery well. Spacing between the corner injection wells is typically 85 feet although it ranges from 50 to 100 feet depending upon the topography and ore characteristics.

Alternating line drives are used in areas where very narrow portions of the roll fronts occur. An alternating line drive is simply a line of wells spaced along the strike of the ore. One well will be an injector, the next a recovery well, the next an injector, etc. The well function may be reversed or changed at appropriate times to improve mining or restoration efficiency. A staggered line drive is used where a roll front is too wide for an alternating line drive. Essentially, the injection wells are on one side of the roll front, and midway between them, on the opposite side of the front, are the recovery wells. Well functions are reversed at appropriate times.

The typical five-spot pattern, alternating and staggered line drive patterns and examples of their corresponding flow lines are shown in Figure 3.4.

In the late 1970's, the Irigaray well fields were developed using a seven-spot pattern (one producing well with six injection wells, in roughly a hexagonal pattern). These patterns were later converted to five-spot patterns during operations in the 1980's and 1990's. Future development at Irigaray and Christensen Ranch will use a combination of the above patterns.

Through the use of a combination of the above patterns, a typical ratio of production wells to injection wells ranges from 1:1.2 to 1:1.3. To date, this has resulted in the completion of 853 production wells and 1,125 injection wells in the Christensen Ranch

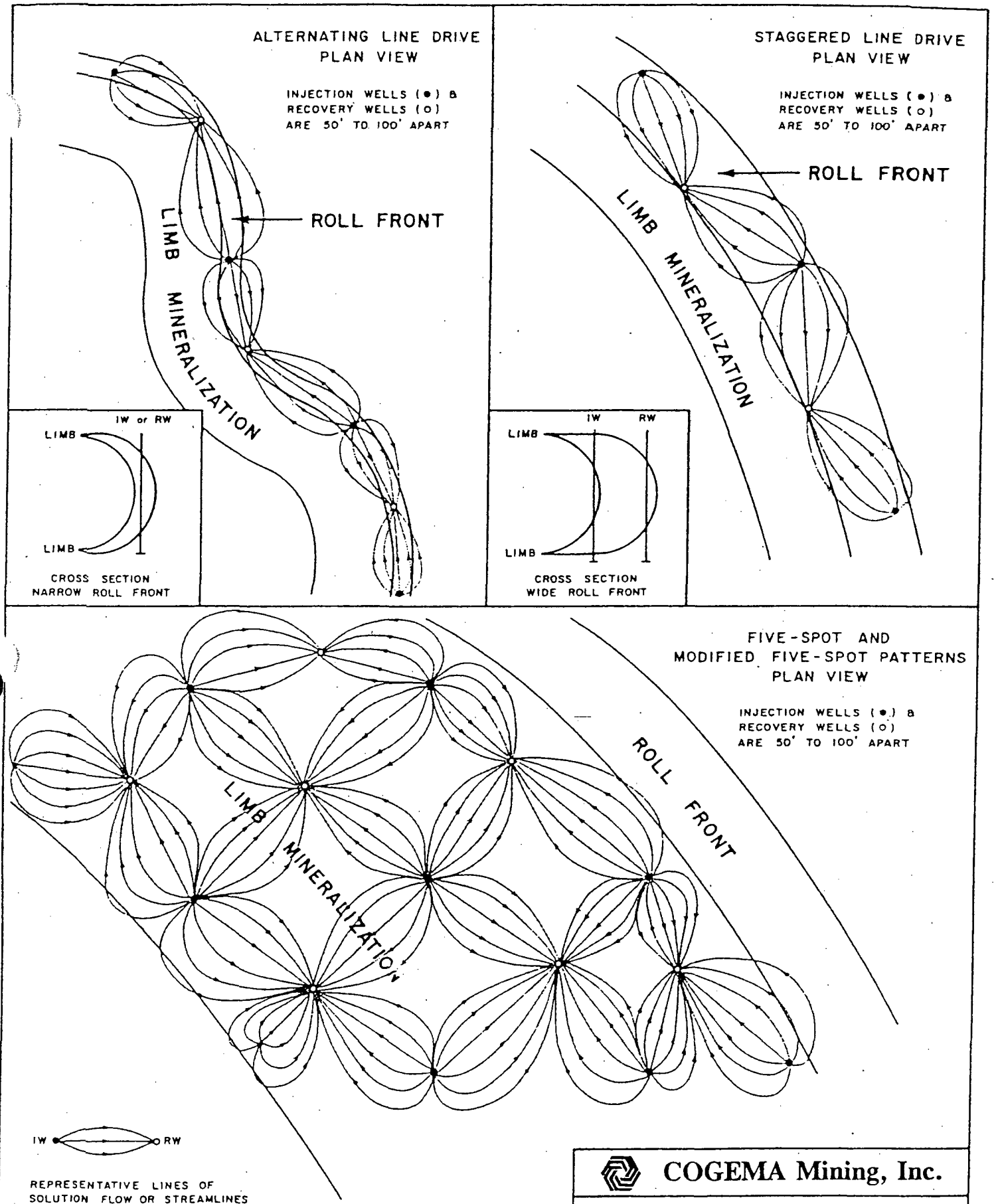

COGEMA Mining, Inc.

TYPICAL FIVE-SPOT,
ALTERNATING & STAGGERED
LINE DRIVE PATTERNS
WITH CORRESPONDING FLOW LINES

SUA-1341, May, 2008

DATA BY: WDC	SCALE: NONE	FIGURE: 3.4
DRAFTED BY: mll	DATE: 12-31-87	

Mine Units 2, 3, 4, 5, and 6, providing a ratio of 1:1.32 (producers to injectors). At Irigaray, the number of producers compared to injectors was lower (424 and 640, respectively), thus providing a ratio of 1:1.51, largely due to the installation of seven-spot patterns.

3.3.1.2 Monitor Wells - Past and Current

After delineation of the mine unit boundaries, monitor wells are installed around the perimeter of the well pattern areas to detect any horizontal migrations of injection solutions, or excursions, during operations. At Irigaray, monitor wells were located at a distance of 400 feet from the edge of the well pattern areas and were spaced 400 to 600 feet apart. As more operational data was collected over the years, monitor well spacing on the perimeters of the well pattern areas has become more sophisticated, and is now based on hydrologic parameters of the mining formation, including gradient and transmissivities, and the ability to retrieve excursions within a 60 day regulatory time frame.

Based upon detailed studies of the hydrologic characteristics of the mining aquifers at both the Irigaray and Christensen Ranch sites, perimeter ore zone monitor wells will be located as follows:

1. Downgradient from the well field, where the well field orientation with the groundwater flow direction forms an angle greater than 45 degrees: 300 feet from the well field edge, spaced 300 feet apart.

2. Upgradient from the well field, where the well field orientation with the groundwater flow direction forms an angle greater than 45 degrees: 500 feet from the well field edge, spaced 500 feet apart.

3. Sides of the well field, which form angles with the flow direction of less than 45 degrees: 500 feet from the well field edge, spaced 500 feet apart.

Perimeter ore zone monitor wells within the trend of the orebody will eventually be abandoned or incorporated into the well field pattern as mining progresses. Ore zone monitor wells will have a completion interval which encompasses the same completed intervals of the adjacent mine unit wells.

Monitor wells are also installed within the mine unit boundaries to monitor for potential excursions to the aquifers overlying and underlying the host ore aquifer. Shallow monitor wells are completed in the first continuous overlying aquifer above the ore aquifer that exhibits at least 10 feet of thickness and a permeability that will allow the

production of enough water for sampling. At the Irigaray site, the shallow aquifer is designated as the "Unit 1 Sand"; at the Christensen Ranch site, the "J" sandstone unit of the stratgraphic column is typically the shallow monitor zone. Deep monitor wells are completed in the first continuous underlying aquifer that exhibits at least 10 feet of thickness and a permeability that will allow the production of enough water for sampling. These are termed the lower Irigaray sandstone and the "L" sandstone unit at the Christensen Ranch site. If there is no appropriate aquifer to monitor below 50 feet of the top of the confining shale underlying the production zone, deep monitor wells will not be installed. One shallow and one deep monitor well will be installed within the mine unit boundaries for each three and one-half (3.5) acres of installed pattern area, where an appropriate monitor zone exists.

In the past, due to problems with improperly sealed exploration drill holes and poor well casing integrity, shallow excursions occurred at the Irigaray site. As a result, shallow monitor wells were installed within the existing well fields at a spacing of approximately one well per acre, or greater in some areas. However, in future Irigaray mine units (if further development occurs), it is proposed to complete these wells at the same frequency as at Christensen Ranch, or one well for each 3.5 acres of installed pattern area. This is now possible due to the superior well casing integrity testing procedures now in use, and the company's practice of sealing all exploration and delineation holes prior to operations.

Although not anticipated, if areas within any proposed mine units are encountered which exhibit very thin or absent confining layers, the company will evaluate the situation and may adjust the monitoring program accordingly. These adjustments may include the expansion of perimeter monitor well completion intervals to detect movement of lixiviant into areas not bounded by a confining layer (if the layer within the well field pinches out, for example) or the placement of overlying/underlying monitor wells in different stratigraphic horizons within the same well field. Additional operational controls may be instituted in the absence of a confining layer such as increased rates of over-recovery or decreased injection pressures.

3.3.2 WELL CONSTRUCTION AND COMPLETION TECHNIQUES

3.3.2.1 Well Completion Techniques

The vertical confinement of the injected fluids underground are controlled by the integrity of the overlying and underlying confining layers, the vertical permeability of the ore-bearing sands and the integrity of wells themselves. Descriptions of the well completion methods for recovery, injection and monitor wells are given below.

Injection and recovery wells are drilled and completed to similar specifications. This

allows for alternating the well function as necessary to improve mining or restoration efficiency. The completed interval in the injection and recovery wells is limited either to the intercepted mineralized zones or to the uppermost and lowermost depths of the ore in adjacent injection wells. An example of a uranium roll front deposit showing the typical completion intervals of injection and recovery wells is provided as Figure 3.5.

Wells are typically drilled with a rotary drill or similar technology such as reverse circulation drilling. A nominal 5" diameter pilot hole is first drilled from the surface through the ore zone and then logged with geophysical borehole logging equipment to provide a gamma ray log, resistivity log and self-potential log. If sufficient mineralization is not encountered to warrant well completion, the hole is plugged with cement slurry or abandonment gel over its entire depth. If abandonment muds are used, the hole is then capped with either a poured concrete plug at the top, terminating approximately two feet below the surface, or by placing a tapered cement cone at about the same depth. Each hole is then marked at the surface for identification.

If the hole meets the economic criteria, it is completed as a well by reaming to an approximate diameter of 9" (10" for nominal 6" casing) prior to casing installation. Injection and recovery wells are cased with nominal 5.6" O.D. (5.0" I.D.) or 6.6" O.D. (5.8" I.D.) SDR 17 polyvinylchloride (PVC) pipe. Past operational experience and numerous mechanical integrity tests have demonstrated the compatibility between injection fluids, formation fluids, process by-products, recovery fluids, and the glue used to join sections of PVC casing at Irigaray and Christensen Ranch.

The well casing is emplaced with PVC centralizers on the top and bottom casing sections and with additional centralizers uniformly spaced at maximum 40' intervals to keep the casing away from the side walls. Although the bottom of the casing can be left open for cementing, the more common practice is to attach a cap on the bottom joint of casing and drill 3/4" diameter weep holes a few inches above the cap.

Cementing is done with a drill rig or cementing unit. A calculated column of neat mixture of Type II or III sulfate resistant cement with a pozzolanic additive (probably 2% to 4% bentonite) is first placed in the casing. The cement has a weight of approximately 15 lbs. per gallon to provide sufficient fluidity to fill the annular space. The cement slurry is then forced up the casing annulus between the casing and the borehole wall by a calculated amount of displacement water. A wiper plug is used between the cement and the displacement water. When cement return is observed at the surface, the well is shut in to allow setting and curing (approximately 24 hours). Depending on conditions, additives may be used to hasten or extend cement setting time. Additional cement is then added to the well annular space at the surface to top off any void areas caused by the cement settling during curing.

After the cement has cured, the mineralized intervals of the well are made accessible to leaching solutions by either drilling through the bottom cement plug or by underreaming or perforating through the casing and cement. Figures 3.6, 3.7 and 3.8 show the three alternate well completion methods which are utilized. The drilling, logging, casing and cementing functions are essentially the same for all methods.

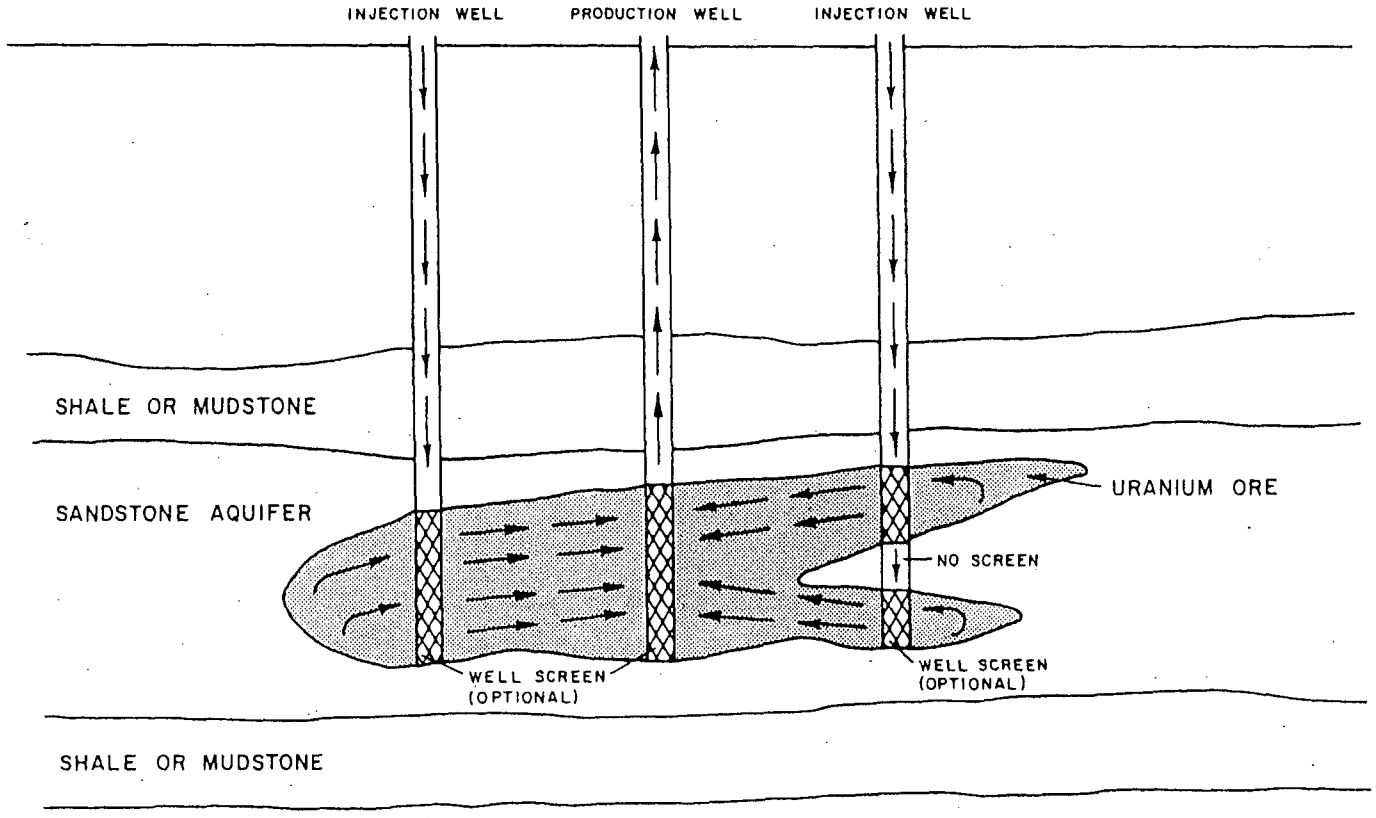

COGEMA Mining, Inc.

TYPICAL INJECTION & RECOVERY WELL COMPLETION INTERVALS

REVISED: 2-6-95	SCALE: NONE	FIGURE: 3.5
DRAWN BY: mll	DATE: 1-5-88	

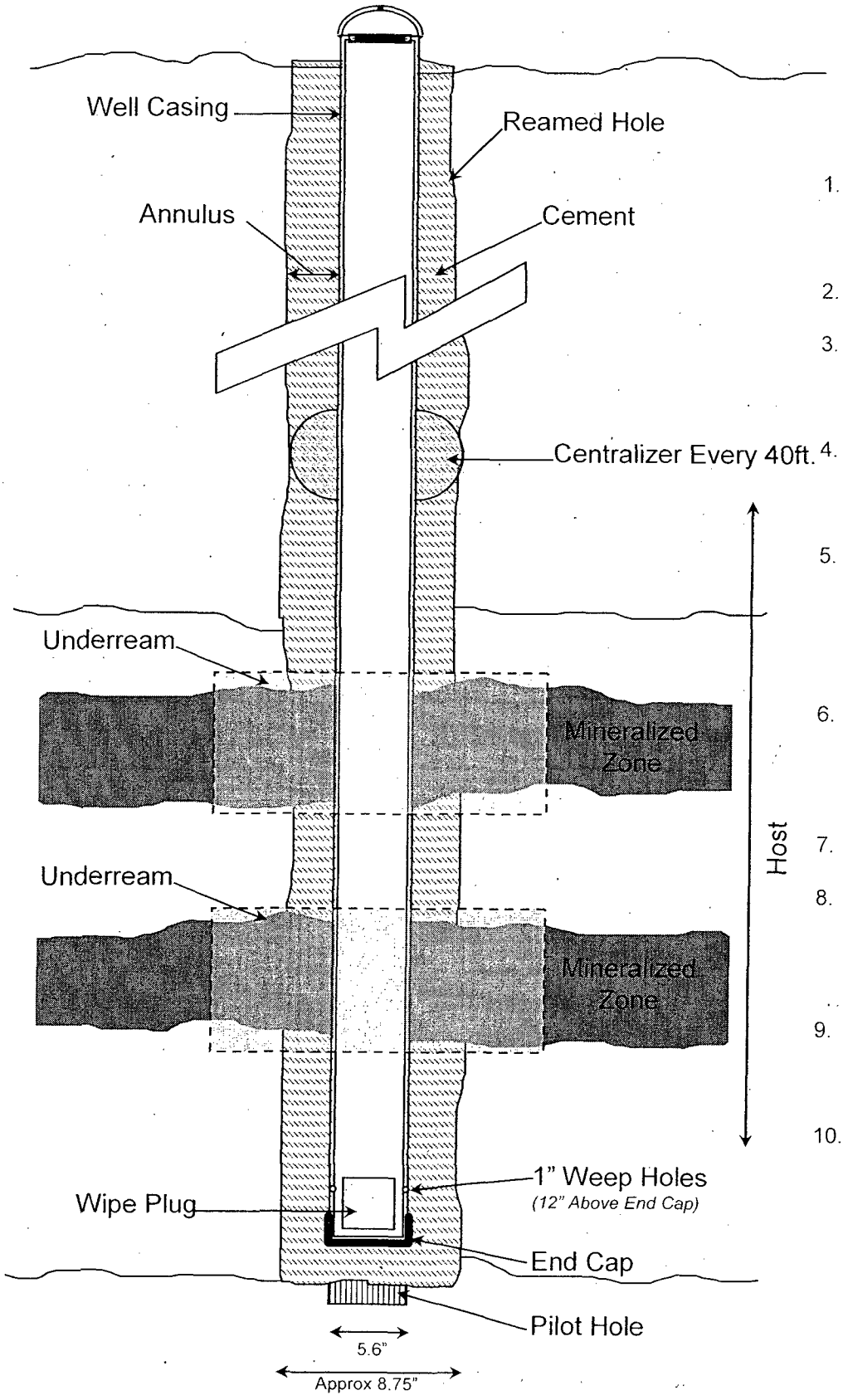

1. Drill a 5" diameter pilot hole through the mineralized zone.
2. Run geophysical log.
3. Calculate depth, thickness and grade of mineralized zone or zones.
4. Determine if the hole is to be completed, and if so, which zones are to be completed.
5. Ream the hole a nominal 8.75" in diameter to approximately 15' below the bottom of the mineralized zone.
6. Install 5" SDR 17 4.9"id casing approximately 10' below the bottom of the lowest completion interval.
7. Cement the annulus.
8. Drill out residual cement to approximately 5' below the bottom of the lowest completion.
9. Underream all mineralized intervals through casing and cement.
10. Airlift and swab casing until the well is cleaned.

COGEMA MINING

Figure 3.6

Well Construction Method 1

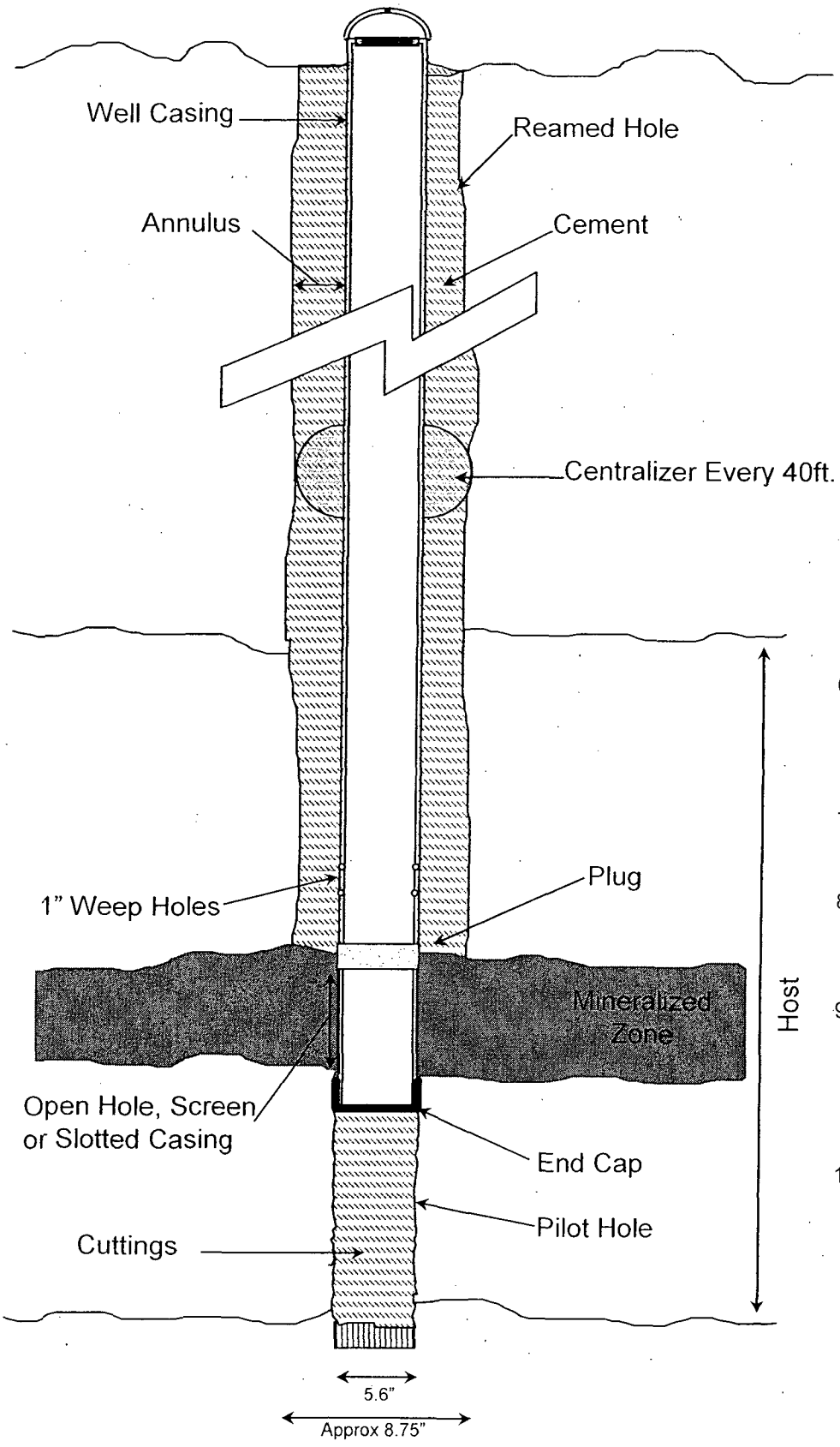

1. Drill a 5" diameter pilot hole through the mineralized zone.
2. Run geophysical log.
3. Calculate depth, thickness and grade of mineralized zone or zones.
4. Determine if the hole is to be completed, and if so, which zones are to be completed.
5. Ream the hole a nominal 8.75" in diameter through the mineralized zone.
6. Install 5" SDR 17 4.9"id casing to the top of the mineralized zone with a cement basket.
7. Cement the annulus. Shut well in.
8. Drill out residual cement inside the casing, plug and airflush.
9. Completion intervals will be approximately 20' to 200' per hole and will be left open hole or screened or slotted casing will be installed
10. Airlift and swab casing until the well is cleaned.

COGEMA MINING

Figure 3.7

Well Construction

Method 2

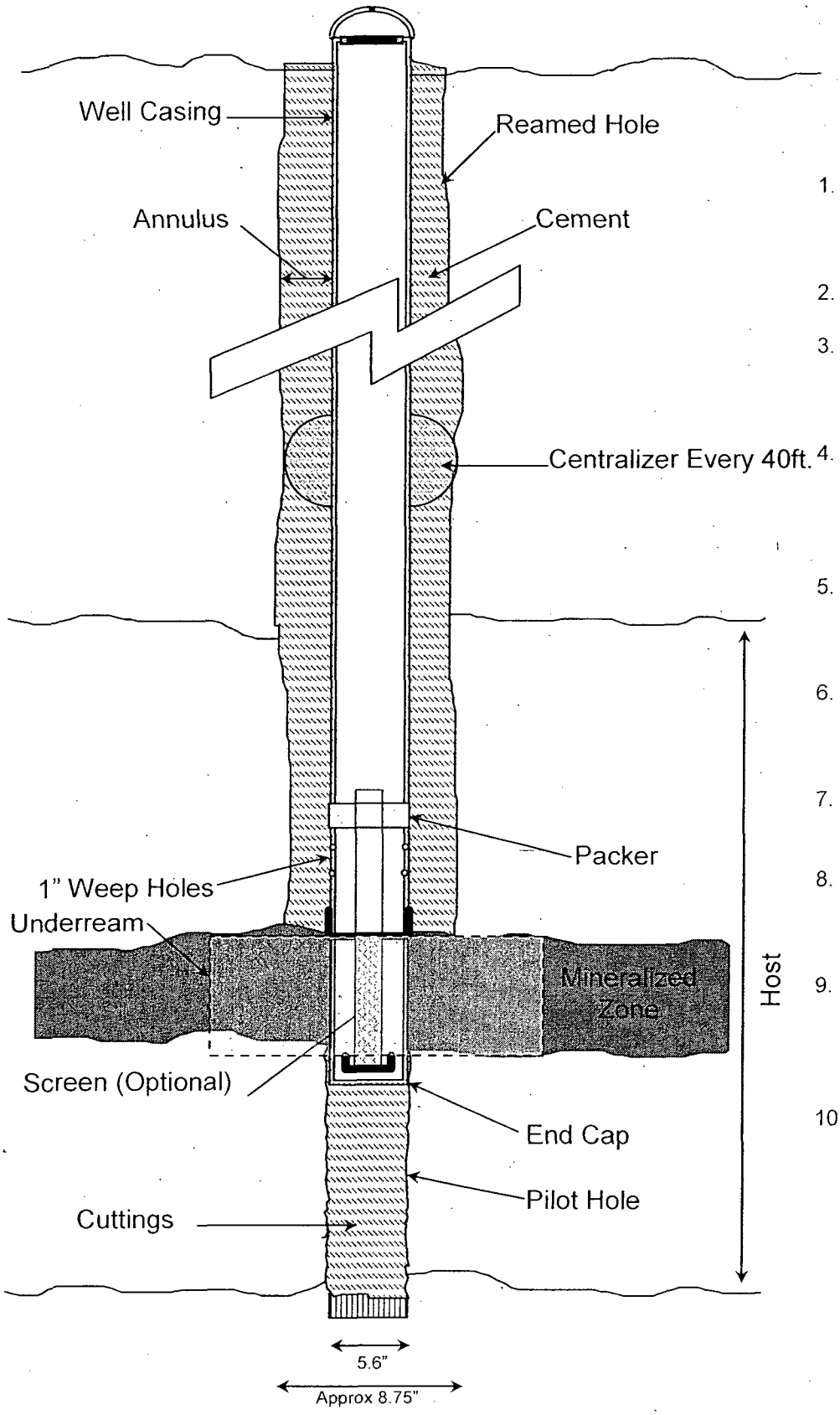

1. Drill a 5" diameter pilot hole through the mineralized zone.
2. Run geophysical log.
3. Calculate depth, thickness and grade of mineralized zone or zones.
4. Determine if the hole is to be completed, and if so, which zones are to be completed.
5. Ream the hole a nominal 8.75" in diameter through the mineralized zone.
6. Install 5" SDR 17 4.9"id casing to the top of the mineralized zone.
7. Cement the annulus. Shut well in.
8. Drill out residual cement inside the casing, and airflush.
9. Completion intervals will be approximately 20' to 200' per hole and will be underreamed or screened.
10. Airlift and swab casing until the well is cleaned.

COGEMA MINING

Figure 3.8

Well Construction Method 3

Underreaming is accomplished with a specialized tool utilizing retractable blades which is lowered downhole to the desired interval with the drill rig. The underreamer blades are activated with hydraulic pressure from the drilling rig pump and are held open by the weight of the drill string. The underreamer blades cut away the casing, cement and borehole wall to expose the mineralized part of the aquifer at the desired interval. When the pump pressure is released and the tool is withdrawn, the blades fold inward and remain in the collapsed position for the trip out of the well. The underreamed intervals are screened and/or gravel-packed if the formation is too poorly cemented or compacted to remain in place without support. An alternative to underreaming is to open mineralized zones by explosive or hydraulic perforating. The specific conditions encountered will determine which technique is most applicable.

Monitor wells are similarly constructed using primarily Methods 2 and 3 (Figures 3.7 and 3.8). If it becomes necessary to sample multiple horizons in a monitor well, the conventional casing, cementing and underreaming of intervals as described for injection and recovery wells are employed. The intervals selected for completion will correlate stratigraphically with injection-recovery intervals and may be isolated with packers for sampling of the appropriate groundwaters.

After a well is drilled and underreamed or completed "open hole", it is cleaned either by air flushing or swabbing techniques. Swabbing consists of the rapid raising and lowering of a tight fitting swab (similar to a hole wiper plug or a series of wiper plugs) within the casing with a pulling unit (Smeal) or drill rig. The vacuum created causes a very rapid inflow of water through the water-bearing open intervals. This inflow washes clay particles and other interstitial debris from the permeable strata, thereby promoting flow rates. Usually this step is followed by air flushing to remove any remaining particles from the well.

Other well cleaning techniques include injection of polyphosphates in aqueous solution. Polyphosphates disperse clays and permit their removal by swabbing and/or air flushing. If chemical precipitates such as calcite are plugging the aquifers the injection of acids (typically hydrochloric acid) or additives such as CO_2 gas, which reacts with water to form carbonic acid, may be required to solubilize the precipitates. These solutions are then washed from the formation by air flushing or swabbing or both.

3.3.2.2 Well Integrity Testing Procedures

All cased wells are tested for integrity after installation. Wells are also retested for integrity after undergoing any physical alteration from underreaming or after any

workover operation wherein the casing could be damaged. The integrity of operating wells will be routinely tested on a schedule of once every five years.

The integrity testing procedure involves the pressure testing of the well casing. The procedure is to set two inflated packers, one at the top of the interval being tested and one at the bottom, to seal the casing. A steel cable on a winch is used to connect the packer assemblies and run them into and out of the hole. High pressure nylon tubing is simultaneously extended and recovered on a reel. Nitrogen gas fed through the tubing inflates the packers after they are properly positioned. Prior to packer inflation, the casing is filled with water. An accumulator with an internal rubber bladder is used in combination with nitrogen tank to pressurize the water between the packers to the maximum operating pressure plus a 20% engineering safety factor.

Each well casing to be utilized for injection or recovery purposes is required to maintain the maximum operating pressure plus 20% for a ten minute period. If the measured pressure loss during the first ten minutes after pressurization is greater than 10% of the test pressure, the well is deemed suspect and must be retested. If, after successive attempts to reseat the packers the well leakage is still greater than 10% of the test pressure, the well is deemed incompetent. Incompetent wells needed for operational purposes will be repaired if possible or replaced and pass an integrity test before being placed into service. Integrity test records for all wells will be kept on file. Repairs may be accomplished for injection wells by inserting drop pipe (rated for at least 200 psi) into the failed casing to a depth below the casing failure and into the host mining zone. K packers, or other suitable packers, will be attached to the bottom of the drop pipe to seal water from entering the failed section of well casing. The void between the drop pipe and the original casing will be sealed with cement and/or bentonite. The drop pipe will then pass an integrity test before being placed into service. See Figure 3.9. Incompetent wells which are not repaired will be plugged and abandoned as described in Section 6.2.3.1.

Based on the depth of the ore zones and corresponding sandstone fracture pressures, the maximum operating pressure at the Irigaray site has been set at 120 psig. Accordingly, cased wells are tested at a pressure of 144 psig. At Christensen, the maximum operating pressure is 140 psi, and cased wells are tested at a pressure of 168 psig.

3.3.2.3 Abandoned Exploration Drill Holes

Approximately 8,000 exploration holes were drilled over the 14,000 acre Christensen Ranch permit area during the period of 1967 through 1986 to establish the uranium ore reserves. An equal number exist on the extended Irigaray property, north and south of the existing permit boundary. A listing of the Christensen Ranch holes and

their locations is given in Appendix D5, Geology, of the original permit application. A listing of exploration holes within the Irigaray permit area is also found in Appendix D5 of that original permit application.

In the case of Christensen Ranch, exploration holes that were drilled prior to 1979 were abandoned by sealing with drill and natural muds defined as drill muds commonly used to drill plug and core holes. No additional materials were added to increase viscosity. Holes drilled during and after 1979 were abandoned by sealing with fortified drill muds defined as T.D. or abandonment muds as required by Wyoming Statutes (W.S.) 35-11-404. Prior to commencement of mining, exploration holes drilled prior to 1979 which are within proposed mine unit boundaries will be relocated, to the extent possible, and resealed from total depth to the surface with approved abandonment muds or cement slurry, according to W.S. 35-11-404. All holes will be marked at the surface for future recognition. Any future drill holes completed but not developed for operational purposes will be sealed from total depth to the surface with approved abandonment muds or cement slurry, according to W.S. 35-11-404 and Section 8 of Chapter 11, Non-Coal Rules, DEQ Land Quality Division, May 3, 2005.

FIGURE 3.9

Repair Method for Injection Wells

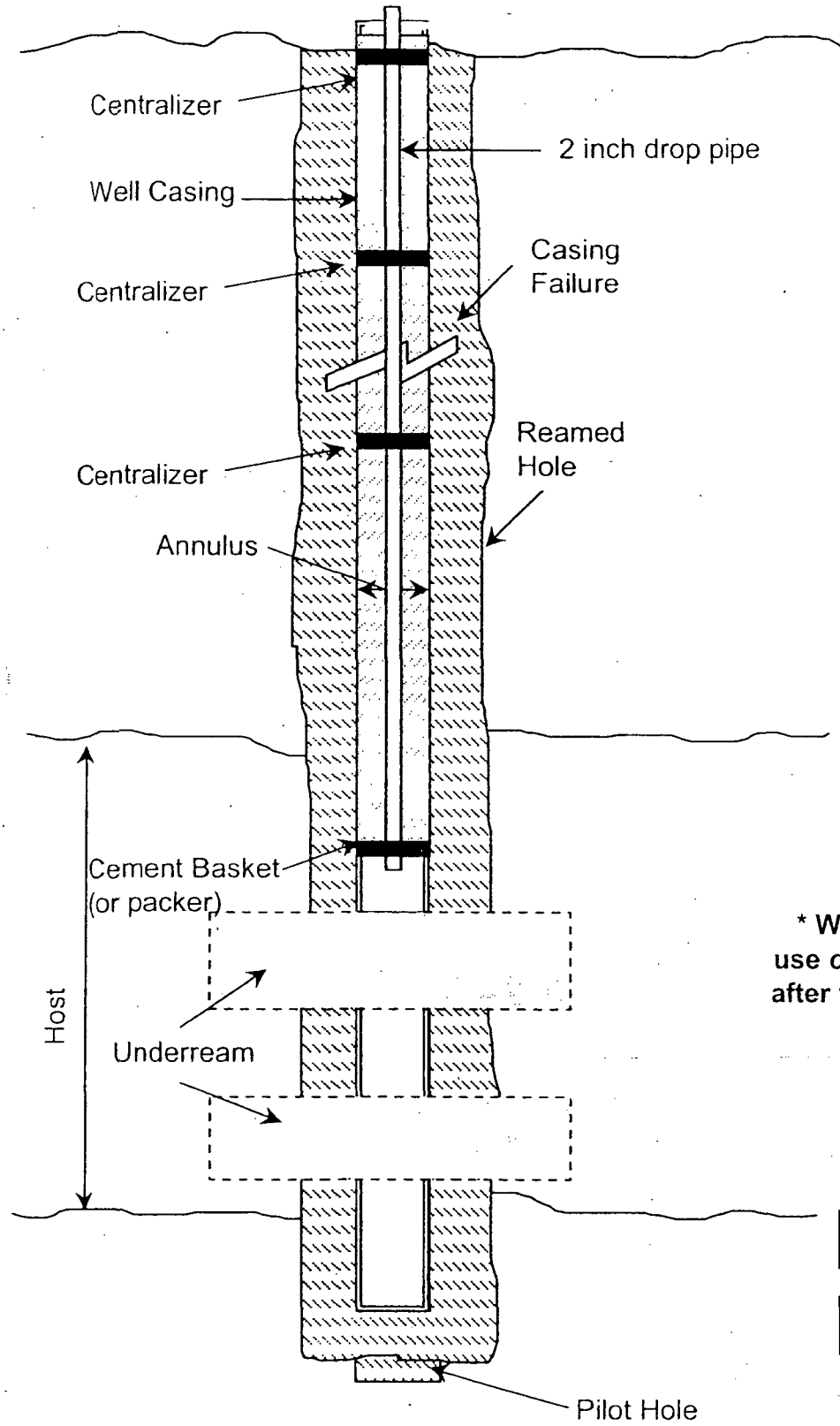

Procedure

1. Place a cement basket (or packer) onto the end of a 2" drop pipe.
2. Set bottom of drop pipe at a depth below the top of the host sand, using centralizers as needed. Attach 1" removable trim-line to drop pipe.
3. Pump cement slurry (and/or bentonite) via trim line into annulus between casing and drop pipe.
4. Integrity test the 2" drop pipe.

*** Well will be suitable for use *only* as an injection well after the repair is completed.**

Repair Cement and/or Bentonite

Cement

COGEMA Mining, Inc.

3.3.3 WELL FIELD OPERATIONS

3.3.3.1 Lixiviant Composition

The lixiviant is the mining solution which is used to solubilize the uranium from the ore deposit. The lixiviant composition is designed to reverse the natural geochemical conditions which led to the uranium deposition. After injection into the mineralized zone, the solution is pumped to the surface for uranium extraction. Following the removal of uranium, the groundwater is refortified with lixiviant and reinjected into the mineralized zone. This cycle continues until mining is complete.

The lixiviant used during operations consists of either sodium bicarbonate/carbonate or carbon dioxide gas (contributes a carbonate complex), using gaseous oxygen or hydrogen peroxide as the oxidant. Carbon dioxide gas will also be added for pH control, and as an additional source of carbonate during the use of sodium bicarbonate. Carbon dioxide gas, alone, is capable of contributing enough carbonate, which along with naturally occurring cations such as sodium, magnesium and calcium, is sufficient to complex the uranium. The lixiviant is made up and refortified on a batch basis, and added continuously to the injection stream.

Typical concentrations of chemical constituents in the lixiviant are given below:

Bicarbonate	1,500 to 3,000 mg/l
Oxygen	400 to 500 mg/l
Sodium	750 to 1,200 mg/l
pH	6.0 to 9.0 units

3.3.3.2 Anticipated Geochemical Reactions

The major geochemical reactions which occur during the mining operation are the oxidation and mobilization of the uranium ore. Oxidation is accomplished through the introduction of gaseous oxygen or hydrogen peroxide with the lixiviant-fortified injection stream. The uranium, existing in the insoluble +4 valence state, is oxidized to the more soluble +6 valence by the following reaction:

$$2(UO_2)\ (\text{solid}) + O_2\ (\text{Dissolved Oxygen}) = 2\ (UO_3)$$

Once the uranium has been oxidized to the +6 valence state, the complexing agent in the lixiviant (bicarbonate) aids in the mobilization or dissolution of the uranium. The following reactions are examples of the leaching process when using a bicarbonate lixiviant:

$$UO_3 + 2(MHCO_3) = M_2UO_2(CO_3)_2 + H_2O \text{ (where M is any monovalent cation)}$$

or

$$UO_3 + M(HCO_3)_2 = MUO_2(CO_3)_2 + H_2O \text{ (where M is any divalent cation)}$$

The uranium is then recovered from the solution in the ion exchange process of the satellite extraction plant.

Other geochemical reactions that are anticipated are the dissolution of other metals in the formation and the ion exchange of lixiviant cations with any clays present in the formation. Analysis of the recovered mining solutions indicate that trace metals such as arsenic, selenium, vanadium, aluminum, iron and manganese are liberated during the leaching process. The mobilization of these metals did not cause significant problems during the groundwater restoration phase at Irigaray, nor at the Christensen Willow Creek R & D test; a chemical reductant was used to reverse the oxidizing characteristics of the groundwater after mining and to precipitate the referenced metals underground at both sites. A summary of the changes in groundwater composition which occur during the mining process is provided in Table 3.2.

3.3.3.3 Well Field Piping, Instrumentation and Operation

In the well field, the uranium-laden (pregnant) solution is pumped from the recovery wells to the uranium-extraction circuit, located within satellite plant building at Christensen Ranch. Following uranium extraction from the pregnant mining solution, the barren solution is refortified and returned to the ore zone through the injection wells. A pressure controller is located downstream from the injection pumps to maintain injection pressures at allowable levels.

Injection solution is sent to the well field via pumps located at the satellite extraction plant. Flows from recovery wells are pumped to the plant by individual submersible pumps. Booster pumping stations may be installed in the well field trunklines where necessary. Future well field piping, instrumentation and operations at Irigaray will occur using the current procedures for Christensen Ranch, which are described in detail following.

TABLE 3.2

ANTICIPATED GEOCHEMICAL REACTIONS DURING MINING

CHANGES DUE TO REAGENTS ADDED DURING THE PROCESS:

All data in mg/l unless noted otherwise

	Pre-Mining Baseline*	Post-Mining Analyses*
Bicarbonate	118.0	1701.3
Chloride	7.2	152.3
pH, units	8.87	7.4
Sodium	136.0	780.0
Sulfate	194.8	387.3
TDS	425	2406.3

CHANGES DUE TO REACTION BETWEEN THE LIXIVIANT AND HOST ROCK:

	Pre-Mining Baseline	Post-Mining Analyses
Calcium	8.6	90.2
Magnesium	1.2	14.0
Potassium	2.6	5.4
Silica	9.11	22.0

CHANGES IN TRACE METAL COMPOSITIONS:

	Pre-Mining Baseline	Post-Mining Analyses
Aluminum	<0.10	0.66
Arsenic	<0.0025	0.148
Iron	<0.06	0.12
Manganese	<0.02	0.09
Selenium	<0.001	3.094
Vanadium	<0.10	2.61

CHANGES IN RADIONUCLIDE CONCENTRATIONS:

	Pre-Mining Baseline	Post-Mining Analyses
Uranium	0.0354	36.4
Radium-226, pCi/l	73.2	1225.7

* Results from the Christensen Ranch Willow Creek Research and Development test conducted in 1985-1986.

Christensen Ranch

Within each mine unit at Christensen Ranch, groups of approximately 40 recovery wells and 50 injection wells are piped individually with one inch to two inch polyethylene pipe into a central well field module building. The boundaries of each module within a mine unit are influenced greatly by topographic features. The flow capacity of each module typically ranges from 300 to 900 gpm.

Inside the module building, each individual well has a flow meter, a pressure gauge, and a manual valve to control the flow rate. The recovery wells are manifolded together on one side of the building and the injection wells are manifolded together on the opposite side. Flow meters giving both rate and totalizer readings are located on the six to eight inch diameter manifolds to record the combined recovery and injection flow. The module injection and recovery feeder lines are buried and connect to the main twelve to fourteen inch diameter trunklines which deliver the solution to and from the plant. It is possible to isolate each module from the main trunkline by closing a butterfly valve.

The recovery and injection flow meters connect via signal wires to remote collection devices. The instantaneous and totalized flow information is then entered directly into a computer data base for flow balancing. Remote transmitting units are used to transmit the data to a centralized location. The computer system is also used to flag abnormal flow values which could be indicative of a leak in the trunkline, or a problem with an individual well. Any irregularities will initiate inspection of the trunklines, feeder lines, or individual wells. Upon identification of a leak, relevant operations are curtailed until a repair is completed. A significant spill (>420 gallons if not into a draw or drainage) associated with a line leak of injection or recovery solution is documented regarding date of spill, nature and estimated quantity of lost fluid, soil sample results (if taken), results of any post remediation surveys (if taken), and posting on a map showing the spill location and impacted area. Any free standing fluid is contained and retrieved when feasible for proper disposal. Contaminated soils are excavated for proper disposal. The above documentation/steps are taken regarding a spill of <u>any</u> quantity of injection or recovery solution that enters a draw or drainage, or regarding a spill of any quantity of a solution other than recovery or injection solution. Documented spills are reported by telephone to the Wyoming DEQ and USNRC within 48 hours of the event.

Well field pipelines are buried a minimum of 18 inches below ground surface to inhibit freezing. Although this is well above the freeze depth, the solutions will be circulated constantly thus preventing freeze-up. The piping may also be insulated prior to burial. In the event of a power failure, auxiliary power will be available or carbon dioxide will be used to clear the pipelines. The shallow burial of the pipelines is for easier

placement and removal either for repair or final reclamation. Pipelines are pressure tested for leakage prior to final burial.

The materials of construction for the pipelines at Christensen range from PVC to HDPE, in sizes of four-inch to fourteen-inch. Individual well piping in the module buildings is typically two to three inch high quality rubber. In 1993, a series of failures of pipeline reducers occurred when Mine Unit 2 was brought on-line. The PVC reducers were manufactured so that the reduction, for example from a four inch line to an eight inch line, was so abrupt that turbulence in the line itself caused a breakage at the reducer. As a result, all of the pipeline reducers in question were replaced with a bell-type reducer that reduced the stress on the pipe and eliminated the failures. The use of bell-type reducers is now standard procedure for the pipe runs at Christensen Ranch.

3.3.3.4 Well Field Balance and Injection Pressures

Flow rates from individual recovery wells range from less than 5 gpm to 40 gpm. Injection flow rates are maintained at a balanced level somewhat lower than the recovery flow rates. An overall solution bleed from the total recovery flow is taken in the extraction plant prior to injection. The bleed consists of approximately 1% of the overall flow rate; therefore, the injection flows are always approximately 1% lower than the recovery flows. The 1% bleed should maintain a net inflow of native groundwater to the production zone thus controlling any potential migration of lixiviant outside of the well field.

Injection pressures are maintained well below formation fracture pressure. Based upon the results of prior operations in the area, injection pressures for operational purposes will be maintained at a maximum of 140 psig at Christensen Ranch. All injection and recovery wells at the Christensen SITE will be tested for integrity using the maximum operational pressure of 140, plus the 20% engineering safety factor (a total of 168 psig at Christensen).

On occasion, operational pressures in excess of the maximum occur as a result of routine maintenance activities such as filter changes, startup or shutdown procedures, etc., or from power surges (very common). These very short term pressure increases are unavoidable, but do not occur for any length of time that could cause problems. To date, these increases have not exceeded the maximum operating pressure plus the 20% engineering safety factor at either the Irigaray or Christensen Ranch sites.

3.3.3.5 Well Field Chlorination

In the case that bacterial action causes deleterious effects in the well fields during

operations such as slime formation, reduction in flow rates, etc., chlorination of the well fields will be necessary. Chlorination is accomplished by the addition of liquid sodium hypochlorite (NaOCl) or gaseous chlorine to the injection stream in concentrations sufficient to maintain an approximate 1.0% residual chlorine in the recovery solutions. The breakdown products of the sodium hypochlorite are sodium and chloride, which are constituents already found in the lixiviant circuit:

$$2NaOCl = 2\,Na^{+} + 2OCl^{-} = 2Na^{+} + O_2 + 2Cl$$

Chemically, the chlorine gas will react the same as the sodium hypochlorite with the advantage of eliminating the additional sodium contribution from the hypochlorite. The residual breakdown products of chloride, and sodium if hypochlorite is used, will be a very small percentage of the chloride and sodium concentrations already present in the lixiviant circuit. Chlorination was used at the Christensen Ranch, Mine Unit 3 operations, after satellite plant vessels brought up from Texas were determined to have caused bacterial induced decreases in injection flows.

3.3.3.6 Power Transmission and Communication Lines

Power is supplied to the Irigaray and Christensen Ranch satellite facilities by Power River Energy Corporation using established powerlines in the vicinity. Power supplied to the Irigaray and Christensen Ranch operations is through pole-supported overhead transmission lines. Powerline poles will conform to the specifications of Olendorff, et.al., 1981, "Suggested Practices for Raptor Protection on Powerlines". Secondary overhead transmission lines will carry power from each plant site to the well fields. The secondary lines will deliver power to transformers located within the well fields. The transformers then step down the voltage for delivery to the well field downhole submersible pumps. Powerlines from the transformers to the well fields may either be on the surface or buried. Telephone lines to each area are buried.

3.3.3.7 Well Fields Maintenance

Each production well is protected by a flange mechanism installed on the well head and by a fiberglass or plastic well house installed over each well. Each well house is clearly marked for ease of well identification. Debris or refuse are routinely removed from well fields to facilitate access by mobile equipment. Access is maintained to each well site to facilitate routine well maintenance or monitoring, including potential re-entry to a well by a drill rig. Well fields are periodically mowed to control vegetation growth.

3.3.3.8 Subsidence Risk Due to Well Fields Operations

The risk of surface ground subsidence due to in situ uranium extraction operations at the Irigaray/Christensen Ranch sites is virtually non-existent. This conclusion is based on the history of the site (there has never been any evidence of surface subsidence over the approximate 30 year operational life of the project) and geological and operational characteristics of the project. The depth of the uranium deposits typically is around 500 feet below the land surface with an average deposit thickness of only eight feet. The average ore body grade is 0.15% U3O8 by weight and the anticipated recovery will be in the range of 50% to 75%. Clearly, the volume of material removed from the formation by in situ mining can be considered trivial. Since the uranium originally was deposited on the individual grain surfaces and in the interstitial spaces of an existing sandstone, the subsequent removal of a portion of that material will simply return the sandstone to its pre-depositional status.

3.4 URANIUM RECOVERY PROCESSING FACILITIES

3.4.1 IRIGARAY CENTRAL RECOVERY PLANT

The Irigaray operation currently consists of an elution process, uranium precipitation circuit, yellowcake dewatering and drying circuit, yellowcake storage and the capability to package and ship either slurry or dried uranium product. The elution, precipitation and packaging/shipping portions of the Irigaray operation are used to process Christensen Ranch uranium-laden resin and uranium product. The Irigaray plant, therefore, serves as the central plant for the Christensen Ranch satellite plant. Additionally, the plant is equipped to receive, store and dry yellowcake slurry from other ISL operations. Plans include a future refurbishing of the Irigaray plant in order to conduct in situ mining of Irigaray well fields if uranium prices support the investment.

A description of each process at the Irigaray plant is provided as follows.

3.4.1.1 General Arrangement

Figure 3.10 depicts the general arrangement of the Irigaray central plant. When the Irigaray plant was first constructed in 1977, the main plant contained a 1,600 gpm up-flow capacity ion exchange circuit (operated at 800 gpm) with accompanying resin transfer and elution columns, precipitation system, calcium clarifiers, lixiviant make-up and the multi-hearth calciner for drying. In 1988, additional processing equipment was installed in the annex to the main plant, consisting of a 2,400 gpm ion exchange circuit (since decommissioned), elution circuit, precipitation circuit, and yellowcake dewatering capability (uranium thickeners and filter press). At the same time, the Christensen resin transfer and elution systems were installed in the annex. The portion of the plant termed "main plant" has not been used since 1982, and now houses only

the transfer water holding tank. The old portion of the plant is also used for storage of byproduct material, and will be used for a vanadium removal circuit or additional elution circuit facilities, if deemed necessary in the future.

3.4.1.2 Ion Exchange/Lixiviant Makeup Circuit

This circuit has been decommissioned at Irigaray.

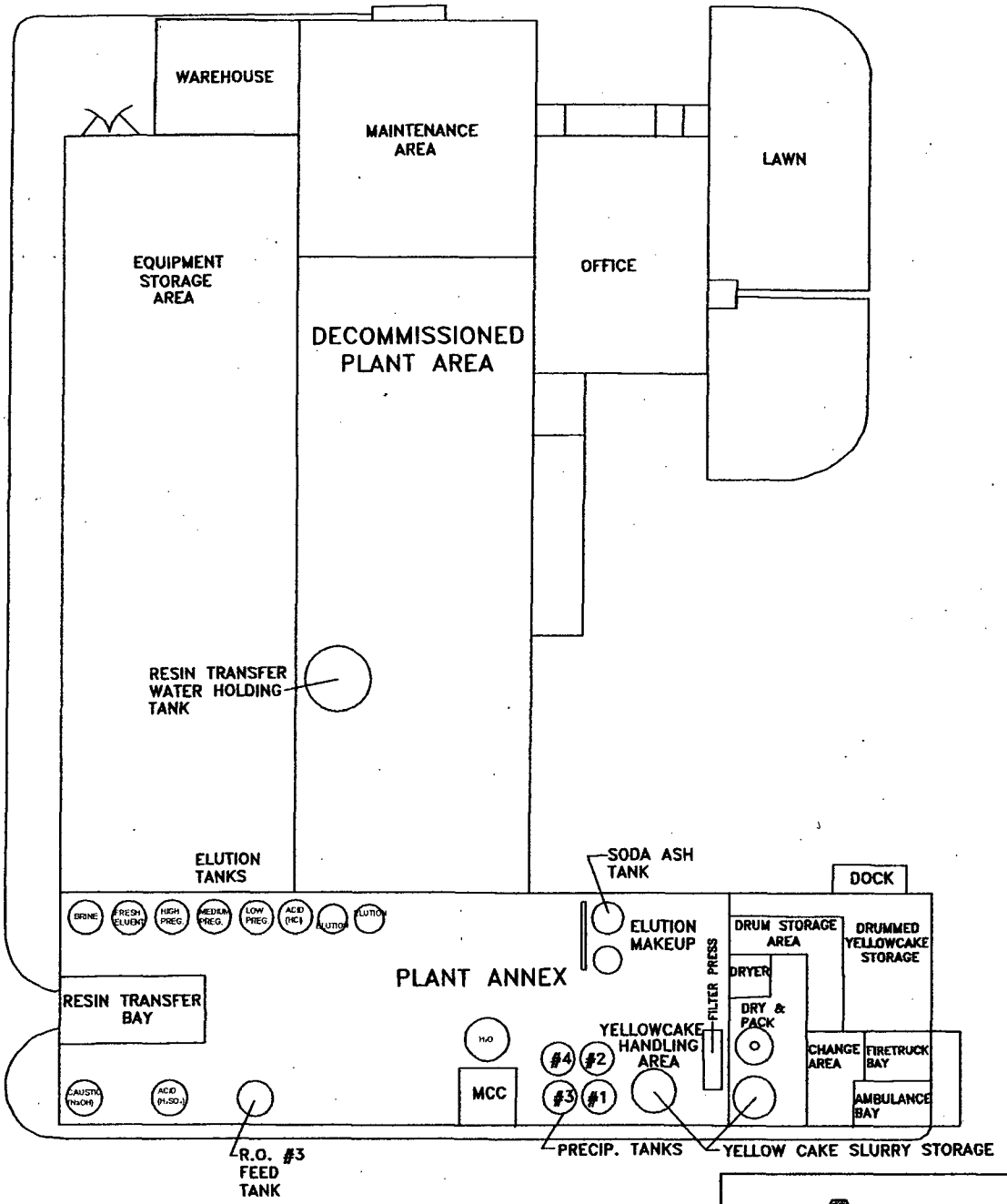

AREVA

COGEMA Mining, Inc.
Christensen Project

Figure 3.10
Irigaray Facility
General Arrangement Diagram

Geology: Enviro: Drafting: Date: May, 2008 Revision:	State: Wyoming County: Johnson: Scale: Drawing ID: Fig IR Plant.dwg

3.4.1.3 Elution and Precipitation Circuit

After the resin in one of the ion exchange vessels is essentially loaded with uranium, it is either transferred to another vessel, or is isolated from the normal process flow for further processing. The uranium is then stripped from the resin by a process called elution. In the elution process, the ion exchange resin is contacted with a strong sodium chloride (salt) solution which exchanges for the uranium and regenerates the resin in a process very similar to a home water softener. Sodium bicarbonate is then used to rinse the resin to keep the stripped uranium from precipitating in the vessel. The stripping solution concentrates the uranium to between 8 and 20 grams per liter, at which level it can be precipitated as a yellowcake product. After elution, the resin is placed back in service for additional uranium recovery.

The eluate from the resin elution circuit is then routed to the precipitation circuit. To initiate the precipitation cycle, hydrochloric acid is added to the uranium bearing solution to break down the uranyl carbonate present in the solution. Hydrogen peroxide is then added to the eluate to effect precipitation of the uranium. The last step of the precipitation process is to add caustic soda to neutralize the remaining acid in solution.

Resin from the Christensen Ranch site is first received in the annex on the west side of the building through large overhead doors. The resin trailer is backed into the building next to one resin elution column. The resin is then transferred from the trailer into the column via a flexible hose. The column of "loaded" resin is then eluted in place, such as described above. Once the resin is stripped of its uranium, it is then reconstituted using the above process. The resin is then transferred from the elution column back to an empty trailer for transport back to the Christensen Ranch facility.

3.4.1.4 Yellowcake Dewatering, Drying and Packaging Circuit

After precipitation, the yellowcake solution is then washed, filtered and allowed to settle prior to entering the drying and product packaging circuit. The yellowcake solution is first processed through a filter press where it is washed, to remove excess chlorides and other soluble contaminants, and then dewatered to a thickened slurry. The slurry is then stored in a yellowcake thickener, or other cone-bottomed tank. At this time the yellowcake slurry, approximately 30 to 50% solids, is either shipped off-site to a uranium refinery via a tanker trailer, or dried on-site.

When drying, the settled yellowcake slurry in the thickener or storage tank is then fed into the propane-fired multi-hearth dryer. There the slurry is dried at a low temperature (approximately 750° F) to a $UO_4 \cdot 2\ H_2O$ (uranate of peroxide) product. After cooling,

the dried uranium product is packaged in drums for shipment. The off-gas discharge from the dryer is scrubbed with a high intensity Venturi scrubber to remove contaminants prior to discharge to the atmosphere. The scrubber maintains a 95% to 99% efficiency for removal of uranium particulate. Spent scrubber solutions are recycled back to the precipitation circuit to recover uranium captured during the scrubbing. The stack discharge to the atmosphere consists of essentially water vapor and small quantities of uranium fines.

Packaging of the dried product occurs on a continuous basis during the drying campaign. The dried product exits the bottom hearth of the dryer through a delumper and a rotary valve into 55 gallon drums (DOT approved). The system is equipped with a dust collection baghouse for personnel protection and dried product recovery. Air from the baghouse dust collection system is routed to the off-gas line from the dryer, which is drawn into the high-intensity Venturi scrubber through an induction fan. Through the scrubber and induction fan system, a vacuum is created, thus containing airborne uranium inside the dryer enclosure.

The yellowcake dryer was installed at the Irigaray plant in 1979, and operated briefly through 1981. When the dryer was initially operated in 1980, the unit was operated as a calciner, i.e. high temperature fired. The yellowcake product was dried at approximately 1600° F, in order to "burn-off" contaminants in the yellowcake, such as ammonium and chlorides (ammonium bicarbonate was used in the precipitation system at that time). As our product is now precipitated with hydrogen peroxide, operations at such high temperatures are not necessary. The hydrogen peroxide precipitation technique forms a superiorly clean cake which is again washed in the filter press prior to drying. Few contaminants will be present when the yellowcake enters the dryer, which in turn will reduce emissions from the scrubber stack.

Based on a performance test of the scrubber after the dryer was refurbished and first started in December, 1994, the WDEQ issued Operating Permit No. OP-254 for the dryer emissions. Several conditions were placed on the permit including a 0.30 lb./hour restriction for particulate emissions from the scrubber, and the following limits for the scrubber pressure loss (or gain), and the scrubbing liquid flow rate:

Liquid Flow Range Allowance:	21.4 to 39.6 gpm
Gas Pressure Differential Range Allowance:	37.1 to 68.9 inches of water

COGEMA will abide by these permit conditions, unless future stack testing proves that different limits should be used and the WDEQ permit is amended.

Toll-drying of Yellowcake

The dryer was re-furbished in late 1994 and is used to dry yellowcake product from

Christensen Ranch. The dryer is capable of operating at a rate of 300 pounds per hour, or approximately 2.6 million pounds of throughput per year. The dryer is also permitted with the WDEQ for this rate through Operating Permit No. OP-254. It is estimated that during peak periods of production, the Christensen Ranch may produce up to 1 million pounds per year of uranium product which will be dried. COGEMA may wish to dry up to an additional 1.5 million pounds per year of yellowcake product from other uranium licensees. MILDOS modeling has been performed at the 2.5 million pound throughput and no significant increases in exposures to the general public have been seen as a result of this level of drying.

In the past the Irigaray plant received yellowcake slurry from our Texas operations for drying. Shipments of slurry were received in exclusive-use slurry transport trailers. Upon arrival, the slurry trailer entered the old portion of the plant through an overhead door directly adjacent to the northern-most yellowcake storage tank (see Figure 3.9, General Arrangement Diagram). The slurry was then pumped to one of the two yellowcake storage tanks (previous calcium clarifiers), using flexible hoses and a diaphragm pump. Excess decant and wash water from the unloading process was routed either to the on-site evaporation ponds as waste, or to the yellowcake processing area for filtration. Future receipt of outside yellowcake slurry likely would require the acquisition of additional storage tanks due to the loss of capacity from recent plant decommissioning activities.

3.4.1.5 Vanadium Separation

Recovery solution and yellowcake analysis from the Christensen Ranch operations has indicated that vanadium will co-leach with uranium during the mining process of portions of the Christensen Ranch ore body. Vanadium is also extracted onto the IX resin during the recovery solution processing. Vanadium is an undesirable constituent in the yellowcake product, therefore, it may become necessary to remove the vanadium prior to drying the Christensen Ranch yellowcake. This will only become necessary if the vanadium content reaches a level where the uranium refineries will penalize the product due to excessive levels of vanadium.

If vanadium removal from the Christensen Ranch product is necessary, a specialized circuit will be installed at the Irigaray central plant. Equipment required for the vanadium separation will consist of two precipitation tanks, two smaller tanks for chemical additions and solution overflow and a vanadium filter press. The vanadium separation equipment will be located in the old plant area next to one of the clarifier units used for yellowcake storage.

The vanadium removal process is very similar to that used for uranium processing. After elution of the Christensen resin, the high pregnant solution will be discharged from the elution unit to a high pregnant surge tank. The solutions would then be

transferred to a tank where uranium will initially be precipitated and vanadium will be separated through a series of chemical additions to reduce the amount of vanadium in the uranium precipitate. Following the initial uranium precipitation, overflow solutions will enter another tank for vanadium precipitation.

Vanadium will be precipitated as a calcium vanadate product. The vanadium product will then be filtered in a pressure filter press to make a filter cake which can be marketed for its vanadium value. The vanadium product will be drummed for storage and shipped on a batch basis. Removing the vanadium allows recycle of the remaining solution (supernate) to the fresh eluant makeup tank; a small portion of the solution may be sent to the evaporation pond.

Based upon vanadium levels present in the yellowcake product from the Christensen Ranch it is anticipated that approximately 60,000 pounds of vanadium product could be produced per year from Christensen Ranch solutions.

3.4.1.6 Flow and Material Balance

Figure 3.11 includes the flow and material balance for the Irigaray elution and precipitation circuits. As noted previously, the Irigaray mining-related facilities (injection solution handling and ion exchange circuits) have been decommissioned. Any future mining at Irigaray will require re-construction of those facilities. Restoration flows are addressed in Section 6.0 of this document.

3.4.1.7 Wastewater Management

Wastewater management at the Irigaray site is through evaporation in lined ponds. Currently, seven evaporation ponds (two of which are still lined) exist on the project. Five of the ponds have had the liners and underlying contaminated soil removed (the pond basins remain). Those ponds are currently not in use. If future waste water storage needs require it, four of the five decommissioned ponds could be placed back into service after re-construction (leak detection systems and liners installation). The remaining two lined ponds are available for other miscellaneous minor bleeds from the process plant, including resin wash water, yellowcake wash water, plant wash downs, etc. Details regarding the evaporation ponds are contained in Section 4.0 of this document.

Two deep disposal wells are licensed for construction at the Irigaray site (Permit UIC 91-247). To date, construction of neither well for additional wastewater disposal has been necessary. Permits for the wells will be maintained, in the case that the wells are deemed necessary.

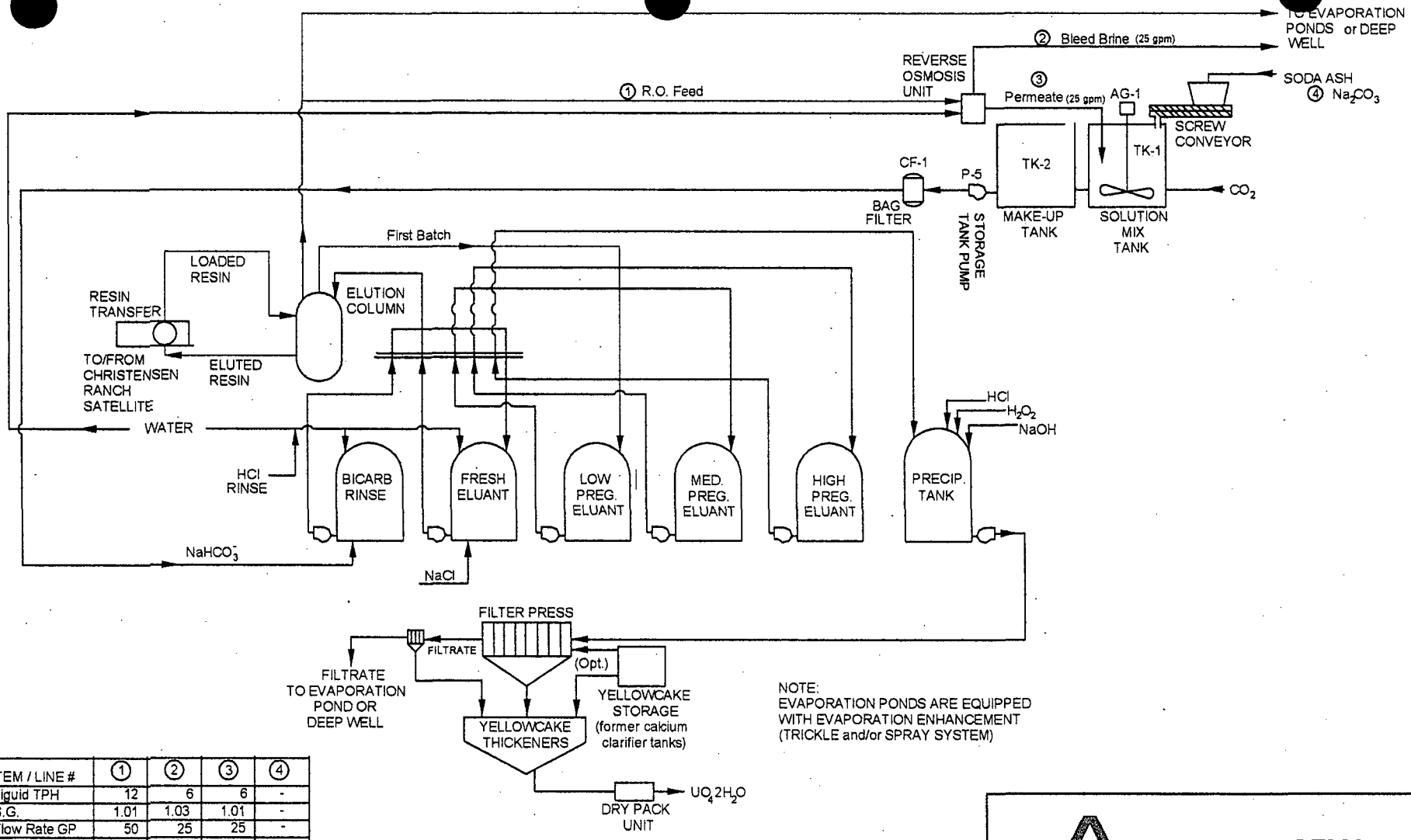

ITEM / LINE #	①	②	③	④
Liguid TPH	12	6	6	-
S.G.	1.01	1.03	1.01	-
Flow Rate GP	50	25	25	-
U3O8 lbs/hr	0.0	0.0	-	-
V lbs/hr	0.12	0.00	-	-
HCO3 lbs/hr	49	49	1.0	235
Na lbs/hr	23	23	.05	-
Cl lbs/hr	4	4	0.1	-
U3O8 ppm	1.0	2.0	-	-
V ppm	0.1	0.2	-	-
HCO3 ppm	1960	3920	78.4	-
Na ppm	800	1568	32	-
Cl ppm	170	333	7	-

AREVA

COGEMA Mining, Inc.
Christensen Project

Figure 3.11
Process Flow Sheet
Irigaray Extraction & Uranium Recovery Plant

Geology:
Enviro:
Drafting: RMO
Date: May 2008
Revision:

State: Wyoming County: Johnson:
Scale:
Drawing ID: Fig IR Flow Sheet.dwg

3.4.1.8 Equipment, Instrumentation and Control

A list of major equipment located at the Irigaray central recovery plant is presented in Table 3.3. The process plant is simplified in design to operate with minimal operator coverage.

Instrumentation is provided in the Irigaray plant to measure the following processes:

- wastewater output to the lined evaporation ponds
- high/low flow indicator alarms
- pressure indicators (including pressure gauges and controllers on injection flow lines)
- pH indicators
- tank level indicators
- flow indicators

The instrumentation is used to monitor the operational efficiency of the process.

Alarm systems are built into a number of plant circuits to alert personnel of high or low flow situations, abnormalities in the dryer area, etc. A listing of the alarms in the Irigaray process are as follows (all are audible with the exception of the computer flagging system):

- elution pump (when pump stops)
- dryer: drum high level, scrubber (high and low recirculation flow), scrubber (water level), scrubber (air pressure), combustion air failure, shaft cooling failure, main fuel (off), delumper high-low torque, burner flame failure, shaft (stopped), shaft (high temperature), furnace (low temperature)

TABLE 3.3

IRIGARAY PLANT EQUIPMENT LIST

Plant Area	Type	Detail	Number	Units
Main Plant				
	Tanks			
		25' dia x 15'	1.0	EA
	Misc			
		Compressor		
		Compressor 4'x6'x8'	1	EA
		Controls 6'x6'x6'	1	EA
		Gas Heater 2'x2'x2'	1	EA
		Waste Water Pump 3'x3'x6'	2	EA
		Compressor Tank	1	EA
	Main Plant Foundations and Floor			
		3.66CF/LF Footer 218'x80'	596	LF
		218' x 80' x 6" Floor	17,440	SF
	Main Plant Building			
		178' x 80' x 24' Steel Building	14,240	SF
		40' x 80' x 40' Steel Building	3,200	SF
Expansion Building				
	Tanks			
		RO Units 8"dia. x 22'	8	EA
		Caustic Storage 15"dia x 12'	1	EA
		Fresh Eluant 15' dia x 12'	1	EA
		Sulfuric Acid 10'dia x 12'	1	EA
		Fresh Water Tank 12' dia x 15'	1	EA
		Hydrogen Peroxide 6'dia x 8'	1	EA
		Precipitation Tanks 12'dia x 15'	4	EA
		Elution Tanks 6'dia x 12'	2	EA
		Acid Strip 12'dia x 10'	1	EA
		Eluant Tanks 12'dia x 15'	4	EA
		Brine 12'dia x 20'	1	EA
		RO Tanks 4'dia x 4'	2	EA

TABLE 3.3 (CONTINUED)

Plant Area	Type	Detail	Number	Units
Expansion Building				
	Tanks			
		Bicarb Makeup 12'dia x 15'	1	EA
		Soda Ash Silo 12'dia x 30' (Steel)	1	EA
		Yellowcake Slurry Silo 17'dia x 26' (Steel)	2	EA
		Flocculants Feed Tank 4' dia x 4' (Steel)	1	EA
		Scrubber Feed Tank 4' dia x 4' (Steel)	2	EA
		Water Tank 3' dia x 3'	1	EA
		Scrubber Water Tank	1	EA
	Misc			
		Hot Water Heater 200gal 3'dia x 5'	1	EA
		Hanging Space Heaters 3' x 3' x 3'	4	EA
		Blower 3' x 3' x 4'	1	EA
	Process Equipment			
		Filter Press 20' x 6' x15'	1	EA
		Dryer/Calciner 8' Dia x 15'	1	EA
		Compressor 3' x 4' x 8'	1	EA
	Pumps			
		Assorted Pumps 3' x 4' x 6'	3	EA
		RO Pumps	3	EA
	Foundations & Floors			
		230' x 80' Foundation @3.66CF/LF Footer	620	LF
		230' x 80' x 6" Concrete Floor	18,400	SF
		6" Below Concrete Dirt Removal	18,400	SF
	Building			
		228' x 80' x 24' Steel Building	18,240	SF
		70' x 80' x 35' Steel Building	5,600	SF
		Masonry Walls 593 LF x 12' High x 8"	7,116	SF

3.4.2 CHRISTENSEN RANCH SATELLITE PLANT

3.4.2.1 General Arrangement

The Christensen Ranch satellite plant is an ion exchange (IX) uranium extraction plant with capabilities for lixiviant make-up and water treatment. Figure 3.12 is the general arrangement diagram of the satellite plant. Solutions from the well field at Christensen are routed through the satellite plant IX system and stripped of uranium then refortified with lixiviant and sent back to the well field. When the resin in the lead IX column is fully-loaded with uranium, it is withdrawn from the column and placed in a specially designed low-profile tanker trailer for transport to the Irigaray central plant. A receiving elution column is located within the annex of the Irigaray plant into which the resin is unloaded. The uranium is then stripped from the resin using the standard eluant process described previously in Section 3.4.1.3. The stripped resin is then reloaded into the tanker trailer and transported back to the satellite extraction plant.

At the satellite plant, the stripped resin is transferred from the tanker trailer into the empty IX column. Resin is then extracted from the next loaded column and the process cycle is repeated. The number of resin hauls per 24-hour day ranges from one to two during full scale operations. Descriptions of the individual processes described above are addressed in the following sections.

3.4.2.2 Ion Exchange/Lixiviant Makeup Circuit

The satellite plant contains four IX trains (sets of columns) with each train having two fixed-bed columns connected in series. The columns in each train have individual capacities of approximately 600 gpm, thus providing a maximum 4,800 gpm capacity of the system. The plant will be operated at an annual maximum flow rate of 4,000 gpm. The columns are designed to process well field solutions containing 100 parts per million (ppm) of uranium as U_3O_8 over a period of two days without incurring high uranium tailings losses into the injected well field solutions. Since the concentration of uranium in the well field will realistically average approximately 60 ppm, and the plant will be operated at an average flow rate less than 4,000 gpm, some conservatism is built into the design and the plant should be able to operate without transportation of resin for two or more days in the event that winter weather limits access to the site.

A portion of the effluent from the IX circuit is withdrawn to ultimately provide the 1% bleed from the well field for lixiviant migration control and clean water for lixiviant makeup and resin transfer. Up to 160 gpm of barren effluent from the IX circuit is passed through a 160 gpm reverse osmosis (RO) unit. The concentrated salts or brine from the RO process (up to 40 gpm) will be sent to lined ponds for evaporation, or to the deep disposal well. Approximately 120 gpm of the clean product water or

permeate will be used for lixiviant makeup and resin transfer or recycled to the injection stream and sent back to the well field. The 40 gpm brine portion will constitute the 1% bleed from the well field for lixiviant migration control. A radium-226 adsorption column may be included in the line which will feed permeate to the unlined storage pond, for further radium-226 removal, if necessary.

The benefits of using RO treatment of the IX tails bleed are that pure water is recycled into the production stream and problems with calcium buildup during lixiviant makeup are avoided. This results in a cleaner plant operation with reduced solids generation.

The lixiviant makeup system consists of chemical mixing tankage and an outside storage silo for solid soda ash. Up to 120 gpm of permeate discussed above is used to mix the lixiviant. The lixiviant makeup system is operated manually by filling the makeup tank with permeate and adding sodium bicarbonate from the external silo. The pH of the resulting solution is lowered by adding carbon dioxide gas and the resulting mixture is pumped to a day tank for metering into the injection stream. The pH instrumentation in the makeup tank is monitored during lixiviant makeup. If CO_2 alone is used as the lixiviant, the lixiviant makeup system will be bypassed and the CO_2 gas will be added to the injection stream immediately prior to entry to the well field.

Chemicals utilized and stored at the satellite plant site consist of carbon dioxide gas, gaseous oxygen, hydrochloric acid and sulfuric acid (small quantities), solid soda ash or sodium bicarbonate and sodium chloride crystals. Propane for heating, as well as gasoline and diesel fuel, are also present on site. All chemical storage tanks outside of the plant building are bermed to contain the volume of their contents in the case of a tank rupture.

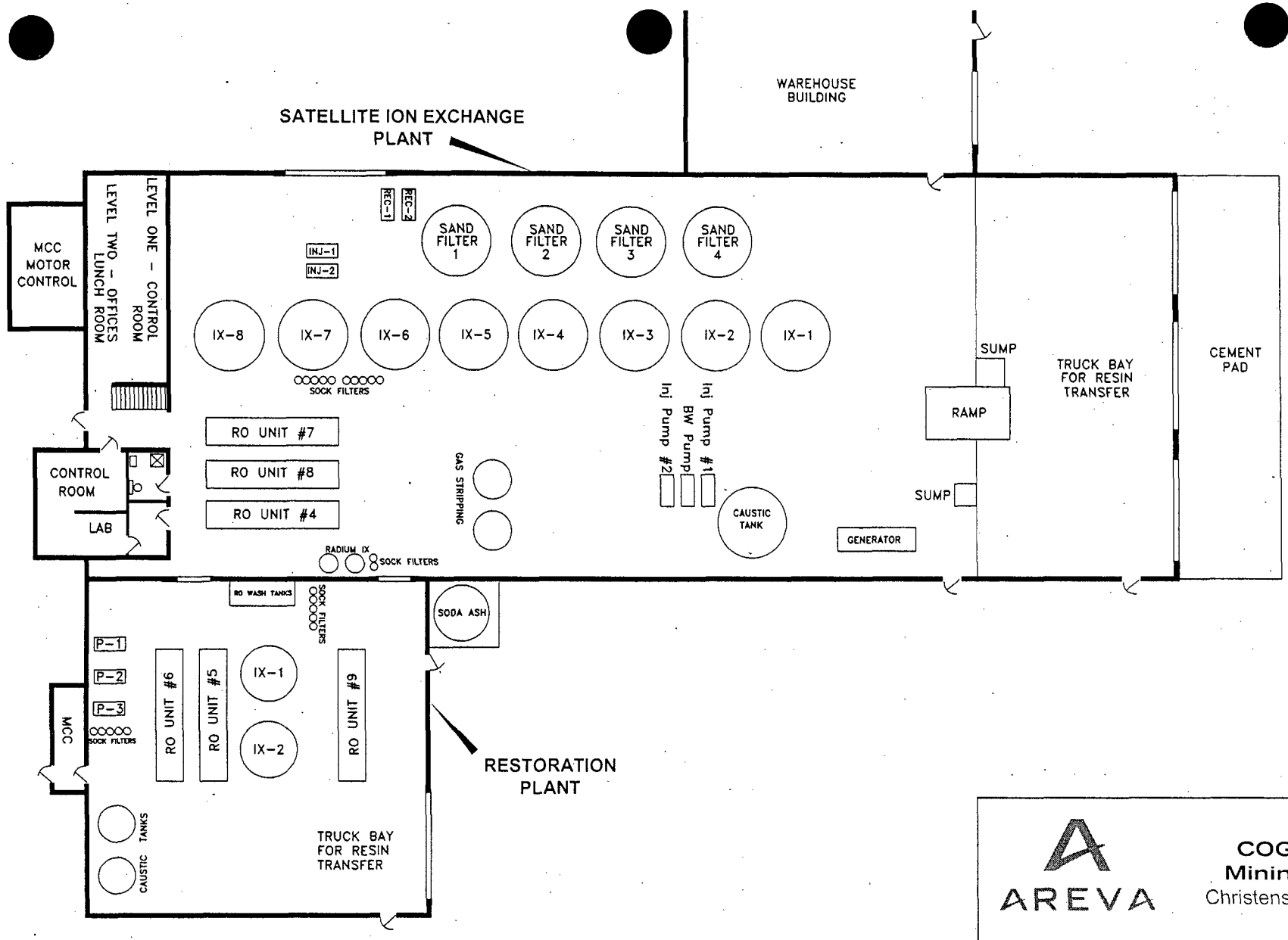

AREVA

COGEMA Mining, Inc.
Christensen Project

Figure 3.12
Christensen Satellite Plant
General Arrangement Diagram

Geology: Enviro: Drafting: RMO Date: May, 2008 Revision:	State: Wyoming County: Johnson: Scale: Drawing ID: Fig CR Plant.dwg

3.4.2.3 Flow and Material Balance

The overall material balance and flowsheet for the satellite extraction process is presented in Figure 3.13. Solutions from the well field first enter the backwash sand filters for removal of any loose sand/sediment particles or debris. Well field solutions are then piped into the four trains of IX columns. Solutions then flow through the IX columns where the uranium is adsorbed onto the resin beads. Loaded resin is shipped to the Irigaray central plant for further processing.

After uranium adsorption and lixiviant makeup, gaseous oxygen and carbon dioxide are added prior to reinjection into the well field. Additional filtering may be required prior to lixiviant injection in the form of cartridge or sand filters and is, therefore, noted as optional.

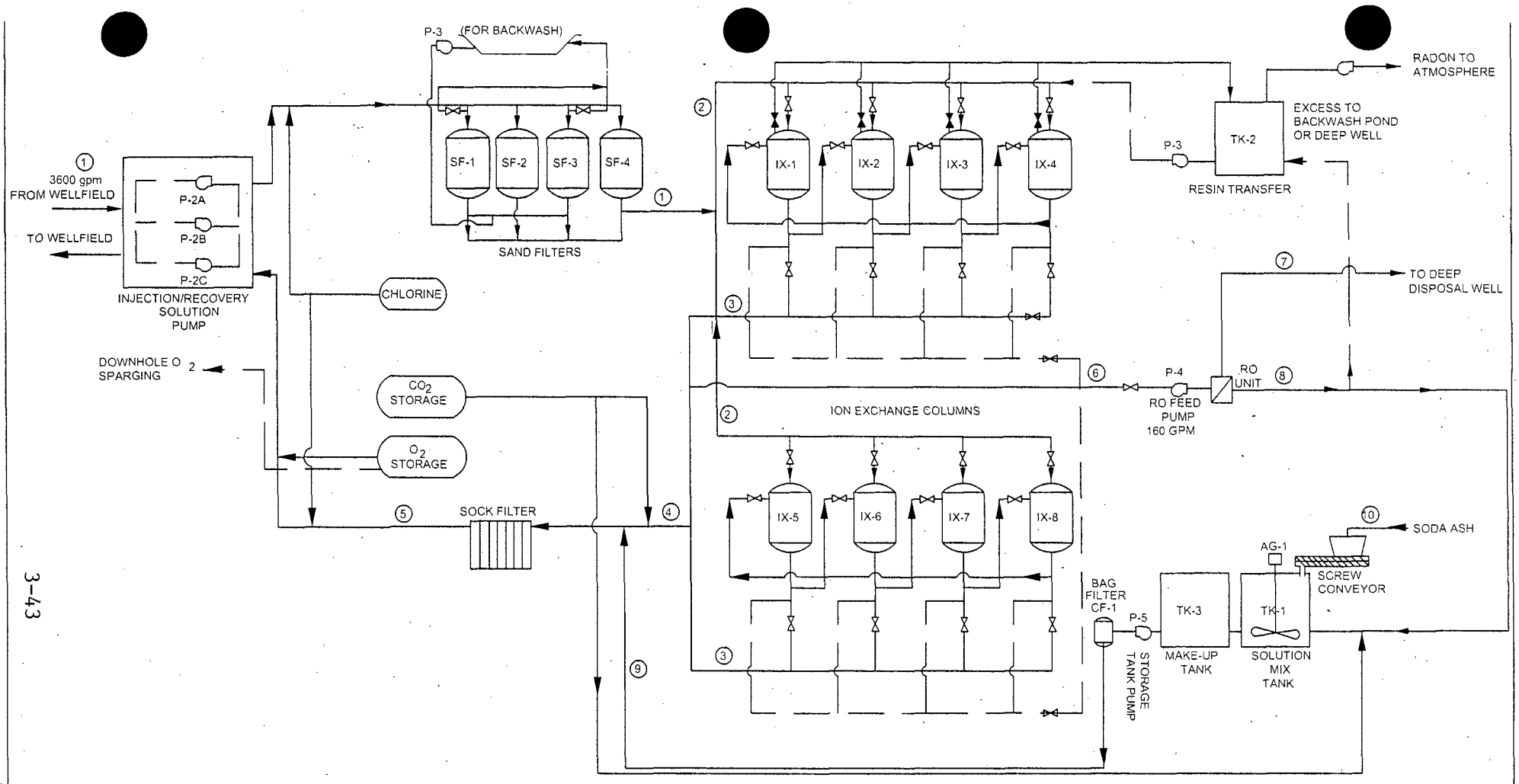

Flow line	Units	1	2	3	4	5	6	7	8	9	10
Liquid	tons/hr	1,011	506	506	971	1,021	40	11	30	32	-
Specific Gravity		1.01	1.01	1.01	1.01	1.03	1.01	1.06	1.01	1.06	-
Flow Rate	gpm	4,000	2,000	2,000	3,840	3,960	160	40	120	120	-
U3O8	lb/hr	120	60	1.0	1.9	2.0	-	0.2	-	-	-
V	lb/hr	1.50	0.75	0.10	0.19	0.20	-	0.02	-	-	-
HCO3	lb/hr	4,005	2,003	1,963	3,768	4,282	157	152	5	391	387
Na	lb/hr	1,602	801	801	1,538	1,586	64	62	1.9	1.9	-
Cl	lb/hr	320	160	170	327	337	14	13	0.4	0.4	-
U3O8	ppm	60	60	1.0	1.0	1.0	-	10.0	-	60	-
V	ppm	0.75	0.75	0.10	0.10	0.10	-	0.80	-	0.75	-
HCO3	ppm	2,000	2,000	1,960	1,960	2,160	1,960	7,605	78.4	2,000	-
Na	ppm	800	800	800	800	800	800	3,104	32	800	-
Cl	ppm	160	160	170	170	170	170	659	7.0	160	-

AREVA

COGEMA Mining, Inc.
Christensen Project

Figure 3.13
Process Flow Sheet
Satellite Extraction Plan
Christensen Ranch Uranium Recovery Plant
(Adsorption Circuit)

Geology:
Enviro:
Drafting: RMO
Date: May, 2008
Revision:

State: Wyoming County: Johnson:
Scale:
Drawing ID: Fig CR Process Flow.dwg

3.4.2.4 Wastewater Management

Two liquid waste streams are produced during the mining operations. The first stream is the 1% bleed taken in the plant for lixiviant control in the well field. The 40 gpm stream consists of the brine from the RO unit discussed above in the ion exchange/lixiviant makeup circuit section. The 40 gpm of brine (less than two percent of the total injection flow) will be sent to a lined evaporation pond or disposed via deep well injection. The permeate not used for lixiviant makup or process stream recycle, is currently stored in a compacted clay-bottomed pond adjacent to the plant site (a second pond is licensed, but not yet installed). Synthetic liners and leak detection systems are not necessary for the permeate storage ponds due to the good quality of the water; uranium and radium will meet NPDES surface discharge criteria for uranium mines after treatment through the IX systems, reverse osmosis unit and, if necessary, radium removal resin in the plant. Additionally, because the water source is process water, NRC standards in 10 CFR 20, Appendix B, Table 2 values for uranium and radium will be met for discharge into the pond. Anticipated water quality concentration ranges of the permeate storage pond solutions are:

	(All data in mg/l)
Bicarbonate	35 - 100
Chloride	15 - 45
Sulfate	1.5 - 10
Sodium	25 - 75
TDS	60 - 200
pH	6.0 - 8.0
Uranium	<0.10 - 2.0
Radium-226 (pCi/l)	<1.0 - 3.0

Design criteria for the permeate storage ponds are provided in Section 4.2.

The second stream produced during mining operations consists of sand filter backwash solutions, resin wash water, plant washdown waters and, on occasion, brine from the RO unit. This wastestream ranges from approximately 5 gpm up to 62.5 gpm (very short term basis) and is diverted to the lined brine ponds for evaporation. There are four lined brine evaporation ponds at the Christensen Ranch site. Two deep disposal wells are also available. Anticipated waste/brine concentration ranges are:

	(All data in mg/l)
Bicarbonate	1500 - 7500
Chloride	150 - 1200
Sulfate	450 - 12000
Sodium	800 - 7500
TDS	2000 - 205000
pH	6.0 -98.0

Uranium	<0.10 - 15
Radium-226 (pCi/l)	<1.0 - 1500

3.4.2.5 Satellite Plant Equipment, Instrumentation and Control

A list of the major equipment and instrumentation for the Christensen Ranch satellite plant is given in Table 3.4. The plant operates with minimal operator coverage.

Except for the lixiviant makeup system, the satellite plant has no tanks which can overtop or spill. The flow of solutions through the sand filters and IX columns is controlled by ratio controllers responding to flow elements from the recovery pumps. Flow to the plant is essentially maintained by the downhole submersible pumps in the wellfields, plus booster pumps along the main trunkline. The two recovery booster pumps in the plant are available to boost the solutions through the satellite plant.

The tails solution from the IX columns which is barren of uranium is piped into the inlet of two injection booster pumps which raise the pressure of the solution being injected into the well field. Lixiviant is introduced into the inlet of the booster pump to provide mixing. The lixiviant is piped into the line using a metering pump. Carbon dioxide and gaseous oxygen (or hydrogen peroxide) are added to the injection solution downstream of the injection booster pumps for in-line pH control and oxidation of the uranium ore. A pH probe controls the amount of carbon dioxide gas added to the injection solution. Operation and instrumentation for the lixiviant makeup system was discussed above in Section 3.4.2.2.

Transfer of resin from the IX columns to the tanker trailers is accomplished by an eductor system and permeate stored in the clean water storage tank inside the plant. Permeate levels in the tank are controlled by a high level controller; when the high level in the tank is reached, a valve in the feed line will close and the permeate will be discharged to the outside storage pond.

All lixiviant makeup activities are performed manually except for the filling of tanks with permeate. In the event of a spill, this solution is collected in the plant sump which discharges to the lined brine evaporation ponds. Instrumentation in the satellite plant is very simple. The plant is equipped with the following processes:

- high and low pressure indicator and alarm on the recovery and injection lines to and from the well fields
- high/low pressure indicator and alarm on the wastewater output to the lined evaporation ponds
- high pH alarm on the bicarbonate mix system (lixiviant makeup)
- other pH indicators
- tank level indicators
- flow indicators

TABLE 3.4

CHRISTENSEN PLANT EQUIPMENT LIST

Plant Area	Type	Detail	Number	Units
Satellite Plant				
	Tanks			
		RO Units 8" dia x 22'	18	EA
		IX Tanks 10' dia x 8'	6	EA
		Resin		
		Sand Filters 10' dia x 12'	4	EA
		Sand		
		IX Tanks 10' dia x 15'	2	EA
		Resin		
		Tanks 4' dia x 4'	2	EA
		Caustic Tank 3' dia x 3'	1	EA
		Process Water	1	EA
		Air Strip	2	EA
	Motors			
		Pump Motors	4	EA
			3	EA
			3	EA
			2	EA
			2	EA
	Pumps			
		Preg Sol'n Pumps	3	EA
		Injection Sol'n Pumps	3	EA
		Backwash Pumps	2	EA
		Sump Pumps	2	EA
	Generators			
		Onan 10x4x7	1	EA
		Caterpillar 12x5x8	1	EA
	Compressors			
			1	EA

TABLE 3.4 (CONTINUED)

Plant Area	Type	Detail	Number	Units
	Concrete Foundations			
		Process Plant		
		3.66CF/LF Footer	368	LF
		120' x 64' x 6" Floor	7680	SF
		Warehouse		
		3.66CF/LF Footer	148	LF
		44' x 30' x 6" Floor	1320	SF
		Loading Area		
		35' x 60' x 2' Floor	2100	SF
	Steel Buildings			
		Process Plant	7680	SF
		Warehouse	1320	EA
Restoration Building				
	Tanks			
		RO Units 8" x 22'	30	EA
		IX Tanks 12' dia x 8'	2	EA
		Resin		
		RO Wash 4'x2'x2'	1	EA
		RO Wash 3' dia 4'	1	EA
	Concrete Foundations			
		3.66CF/LF Footer	242	LF
		60' x61' x6" Floor	3660	SF
	Steel Buildings			
		60' x 61' x 22'	1	EA

3.5 ACCESS ROADS

The reader is referred to Section 3.5, Access Roads (pages 3-44 to 3-51) of "Permit to Mine No. 478, A-2, Update and U.S. NRC License Renewal Application: Source Material License SUA-1341, January 5, 1996" for a discussion of access road design and construction.

3.6 CONSTRUCTION CONSIDERATIONS

The reader is referred to Section 3.6, Construction Considerations (pages 3-44 to 3-57) of "Permit to Mine No. 478, A-2, Update and U.S. NRC License Renewal Application: Source Material License SUA-1341, January 5, 1996" for a discussion of topsoil handling during construction of such features as roads and well fields, surface drainage control, interim seeding, and fencing.

3.7 DEVELOPMENT SCHEDULE

As previously addressed, well field development at the Irigaray site occurred during the late 1970's and early 1980's. Restoration of these well fields has been completed. Continued development at Irigaray is potentially scheduled after the majority of the development at Christensen Ranch is completed. Because of the uncertainty of further Irigaray development, such development is beyond the scope of this renewal document.

Initial development of the Christensen Ranch began with the permit approval in 1988, and the installation of Mine Unit 3. This was followed by the development of Mine Unit 2 in 1992, Mine Unit 4 in 1994, Mine Unit 5 in 1995, and Mine Unit 6 in 1996. Mine Unit 1 has never been developed, as Mine Units 2 and 3 actually encompass the originally planned Unit 1. Mining was completed in all of these mine units, and the aquifer restoration has been completed (report submitted April 8, 2008). As noted previously, re-entering Mine Unit 5 for additional mining is being evaluated.

A mining and restoration timetable has been developed for all current and proposed mine units at the Christensen and Irigaray properties. This timetable is based on the following assumptions:

1. Each mine unit will be mined over a period of 3 to 4 years.

2. A buffer zone may be required between mine units undergoing mining and restoration.

3. The start of restoration of a specific mine unit will follow the completion of mining by approximately one year and will be accomplished within a

two to three year period.

4. Decommissioning of a particular mine unit will commence following regulatory approval of aquifer restoration and stability. Surface reclamation will then be accomplished in the mine unit within the first year after the completion of well abandonment and decommissioning.

Figure 3.14 provides the proposed mining and restoration sequence for Mine Units 7 through 12 at Christensen Ranch. Mine Units 10 through 13 are also presented for Irigaray as an acknowledgement of the possibility of further mining activity at Irigaray. The schedule accounts for approximately 16 years of mining and restoration if mining is limited to Christensen Ranch; an additional eight years would be entailed if mining returned to Irigaray. Time estimates include decommissioning/reclamation.

The mining and restoration sequence provided in Figure 3.14 may be affected by various influences. These influences typically involve longer (or shorter) than predicted mining or restoration times, the necessity to increase or curtail production or delays in well field installations. All of these influences interact to cause changes in the predicted mining and restoration sequence. To account for such changes, the mining and restoration schedule is updated each year in the annual report to the WDEQ and USNRC.

CHRISTENSEN and IRIGARAY
LIFE OF MINE
DEVELOPMENT, MINING, RESTORATION and RECLAMATION SCHEDULE

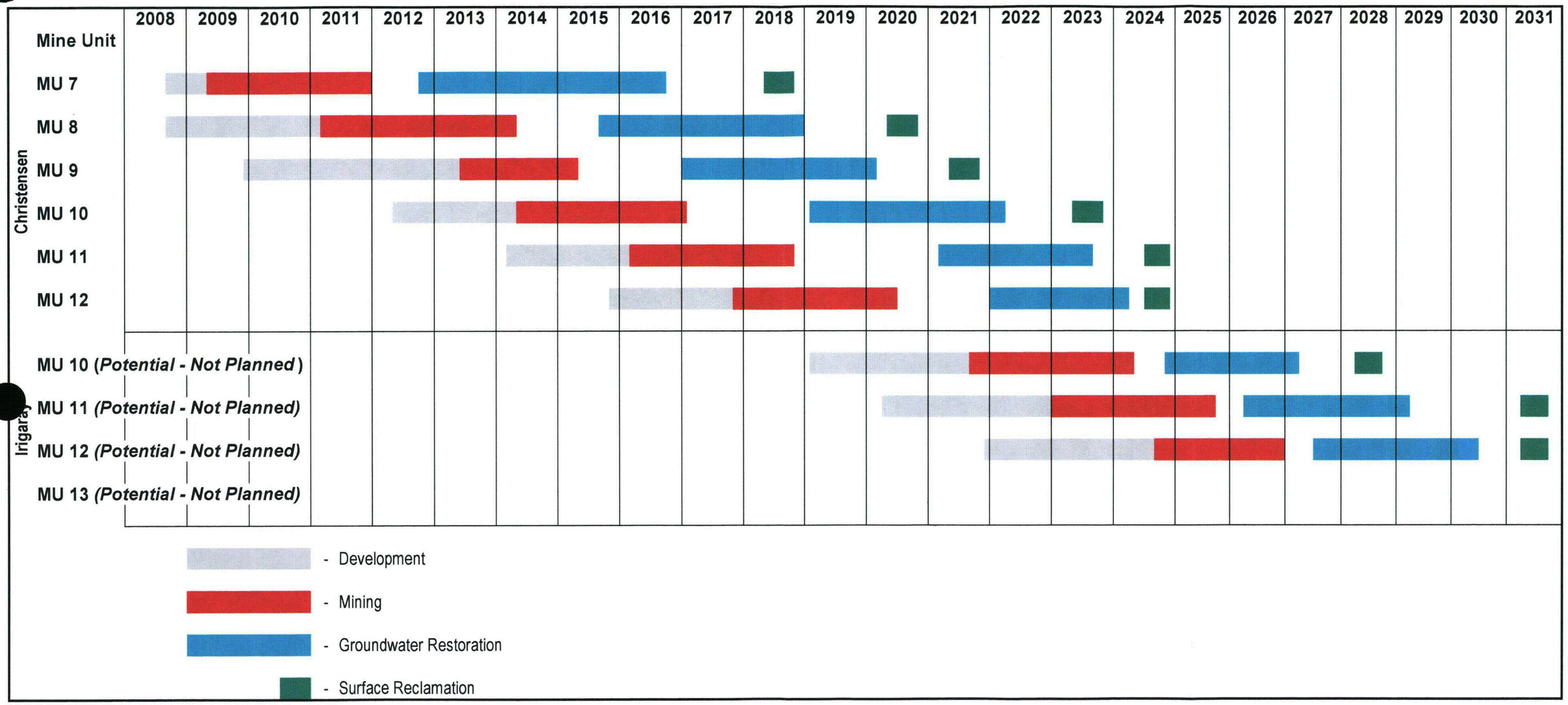

Development Schedule
Figure 3.14
SUA-1341, May, 2008

THIS PAGE IS AN OVERSIZED DRAWING OR FIGURE,

THAT CAN BE VIEWED AT THE RECORD TITLED:

DRAWING NO. FIGURE 3.1, "IRIGARAY & CHRISTENSEN RANCH PERMIT AREAS"

WITHIN THIS PACKAGE... OR BY SEARCHING USING THE DOCUMENT/REPORT NO. FIGURE 3.1

D-01

THIS PAGE IS AN OVERSIZED DRAWING OR FIGURE,

THAT CAN BE VIEWED AT THE RECORD TITLED:

DRAWING NO. FIGURE 3.2, "IRIGARAY PROJECT GENERAL LOCATION MAP PERMIT TO MINE #478"

WITHIN THIS PACKAGE... OR BY SEARCHING USING THE DOCUMENT/REPORT NO. FIGURE 3.2

D-02

4.0 EFFLUENT CONTROL SYSTEMS

4.1 GASEOUS AND AIRBORNE PARTICULATES

Historically, emissions from ISL mining operations are significantly lower than conventional mining and milling operations. The primary source of emissions from ISL operations are from the process plant and associated equipment. Because the Christensen Ranch satellite plant is strictly an ion exchange (IX) facility and will have no precipitation of uranium, the only significant radioactive airborne effluent will be Radon-222 gas. At the Irigaray facility, effluents are limited to the process facility and the drying/packaging unit.

4.1.1 CHRISTENSEN RANCH SATELLITE FACILITY

Radon gas is mobilized from the ore zone during the mining process and will be present in the recovery solutions when they enter the plant facility. The majority of the radon gas will remain in solution during the plant process because the IX trains are closed, pressurized systems. A limited amount of radon gas will be released in the lixiviant makeup tanks. These unpressurized tanks will be vented directly to the atmosphere outside of the plant building to minimize personnel exposure.

Another small release of radon gas can occur during the resin transfer from the loaded IX column to the resin tanker trailer. The IX column is vented to the atmosphere directly outside of the plant building to release the radon gas liberated during the transfer process. In addition to the tank ventilation, the plant building is equipped with exhaust fans to further remove radon that is released inside the building, on an as needed basis.

Since the satellite process is entirely a wet process and uranium is not concentrated on-site, there are no uranium particulate effluents from the facility. Spills inside the plant are immediately washed down which eliminates the potential for any buildup of radioactive particulates.

Sources of non-radiological particulate emissions are fugitive dust from vehicular traffic and minor soda ash releases during the filling of the outside storage silo. Particulate emissions from the processing facility primarily occur from the lixiviant make-up process, where soda ash (Na_2CO_3) is used to generate the sodium bicarbonate lixiviant. The soda ash is stored in an outside silo adjacent to the plant building, with access for receiving loads of soda ash. The silo is equipped with a baghouse dust collection system which routinely collects over 99% of the product particulate created during the addition of soda ash to the silo. Based on the receipt of thirty soda ash shipments per year during mining operations, 75,000 lbs/shipment, and a calculated loss of 500 lbs/shipment, it is estimated that approximately 7.5 tons/year of soda ash particulate is lost to the atmosphere during loading of the silo.

These emissions are considered minor and insignificant due to the limited traffic (in the case of fugitive dust) and the relatively low usage of soda ash (thirty shipments per year).

4.1.2 IRIGARAY FACILITY

The primary source of emissions from the Irigaray facility involve fugitive dust from vehicular traffic, release of radon gas from the Christensen Ranch resin processing, and the release of yellowcake particulate emissions through the dryer/packaging system. A total of 92.8 tons per year of air particulates originally was estimated to be emitted from processing and product drying activities at the Irigaray site. This compares with the previous total of 100 tons estimated in the 1979 WDEQ-AQD air permit application with the dryer operating only 25% of the time. The 92.8 tons per year is also based on full scale operations, including wellfield operations; emissions will be correspondingly smaller without any wellfield operations at Irigaray. Also, the emissions would be far less during restoration at Christensen Ranch due to fewer vehicles on the roads and limited plant processing at Irigaray.

Fugitive Dust

Potential particulate emissions from fugitive dust were originally estimated at 89.5 tons per year from the Irigaray facility. This included traffic on access roads within the permit boundary (37.9 tons/year) and wellfield roads (51.6 tons/year). Although the number of vehicles used as the basis for the fugitive dust emissions estimate is actually higher than current practice, COGEMA has used the same fugitive dust particulate emission estimate for the purposes of impacts evaluation.

Process Facility

Particulate emissions from the processing facility primarily occur from the solution make-up process (when in use), where soda ash (Na_2CO_3) is used. The soda ash is stored in an silo inside the plant building, with access for receiving loads of soda ash. Based on the receipt of less than one soda ash shipment per year during processing operations at 75,000 lbs/shipment, and the containment of the silo within the building, losses would be minimal.

Radon emissions from resin processing is another source of emissions within the process facilities. The majority of the emissions are from the top of the ion exchange columns, which are covered and vented to the atmosphere outside the plant building. The plant buildings are equipped with exhaust fans to remove radon that is released inside the plant building, on an as needed basis.

The final source of emissions in the process facility is yellowcake particulate emissions

from the drying/packaging circuit. When the dryer was first operated in 1980, the unit was operated as a calciner, i.e. high temperature fired. The yellowcake product was dried at approximately 1600° F, in order to "burn-off" contaminants in the yellowcake, such as ammonium and chlorides. Subsequently, the unit was operated at much lower temperatures, as there were no contaminants to burn-off. The hydrogen peroxide precipitation technique forms a superiorly clean cake, which is again washed in the filter press prior to drying. Few contaminants are present when the yellowcake enters the dryer, which in turn reduces emissions from the dryer.

The drying and packaging unit has three types of emissions: byproducts of combustion, volatilized solution residuals and uranium fines. The byproducts of combustion result from the 1,200,000+ BTU/hour drying unit. The unit is propane fired and is designed for 100% combustion. The air emissions resulting from the byproducts of combustion are CO_2, H_20, O_2, and N_2. Figure 4.1 is a simplified schematic of the drying and packaging unit.

The dryer will operate continuously, for up to 8,760 hours/year, to process uranium from Christensen Ranch operations. Additionally, in the future, uranium from other operators' facilities may be dried at Irigaray. Accordingly, an updated MILDOS evaluation was conducted in 2008 for an operation with a 2,500,000 pound dryer throughput. The results of the MILDOS evaluation are provided in Section 7.3 of this report. The dryer is currently permitted by the WDEQ for up to 2,628,000 pounds per year throughput.

To limit emissions of volatilized solution residuals and uranium fines, the exhaust system in the dryer/packaging area is equipped with a filtration/scrubber system. The filtration/scrubber system consists of two components which are described below.

Dryer Off-Gas System

The dryer at the Irigaray Site has an off-gas system that treats the exhaust gases using a wet approach Venturi scrubber. As the off-gases flow from the dryer to the Venturi scrubber, they are cooled in the connecting duct by the addition of ambient air to the duct.

The Venturi scrubber removes all particulates down to the sub-micron size. The cleaned gas exits the top of the separator through an induced draft fan and is discharged to the atmosphere through the stack. The top of the stack is 62 feet above the ground surface and 21 feet above the roof surface. The airflow in the stack is typically in the area of 2300 cfm (at standard temperature and pressure). Spent scrubber liquor is recycled to the main plant operation.

Packaging Dust Control

Uranium fines are generated during the product prying and packaging. Probably 75% to

80% of the uranium fines are generated from the packaging of the materials after drying, rather than from the dryer itself. The yellowcake solids exit the bottom of the dryer and are loaded into drums by a rotary valve. During the drum loading operation, the top of the drum is kept under negative pressure by the use of a drumhood fitted with a suction line. Any fugitive dust generated during the loading operation is captured by the hood and is transported by the suction line to a baghouse dust collector. The filtered air from the baghouse is combined with the dryer off-gas and goes to the Venturi scrubber for further cleaning. The bagfilters in the baghouse are cleaned by an air shock backflush which causes the solids to fall off the bagfilters to the bottom of the baghouse where they are discharged to a drum by a rotary valve.

Stack Emissions Surveys

Emissions from the dryer are monitored on a semi-annual basis through isokinetic stack testing. The WDEQ air permit for the dryer was based on the results of stack testing performed in 1980, when the dryer was initially operated. Stack emission surveys performed from 1994 through 2001 show that average total particulate emissions are less than twenty-five percent of the 1980 results, presumably due to the cleaner peroxide product now produced at Irigaray. The results of the 1980, and 1994 -2001 stack emissions tests are provided in Table 4.1.

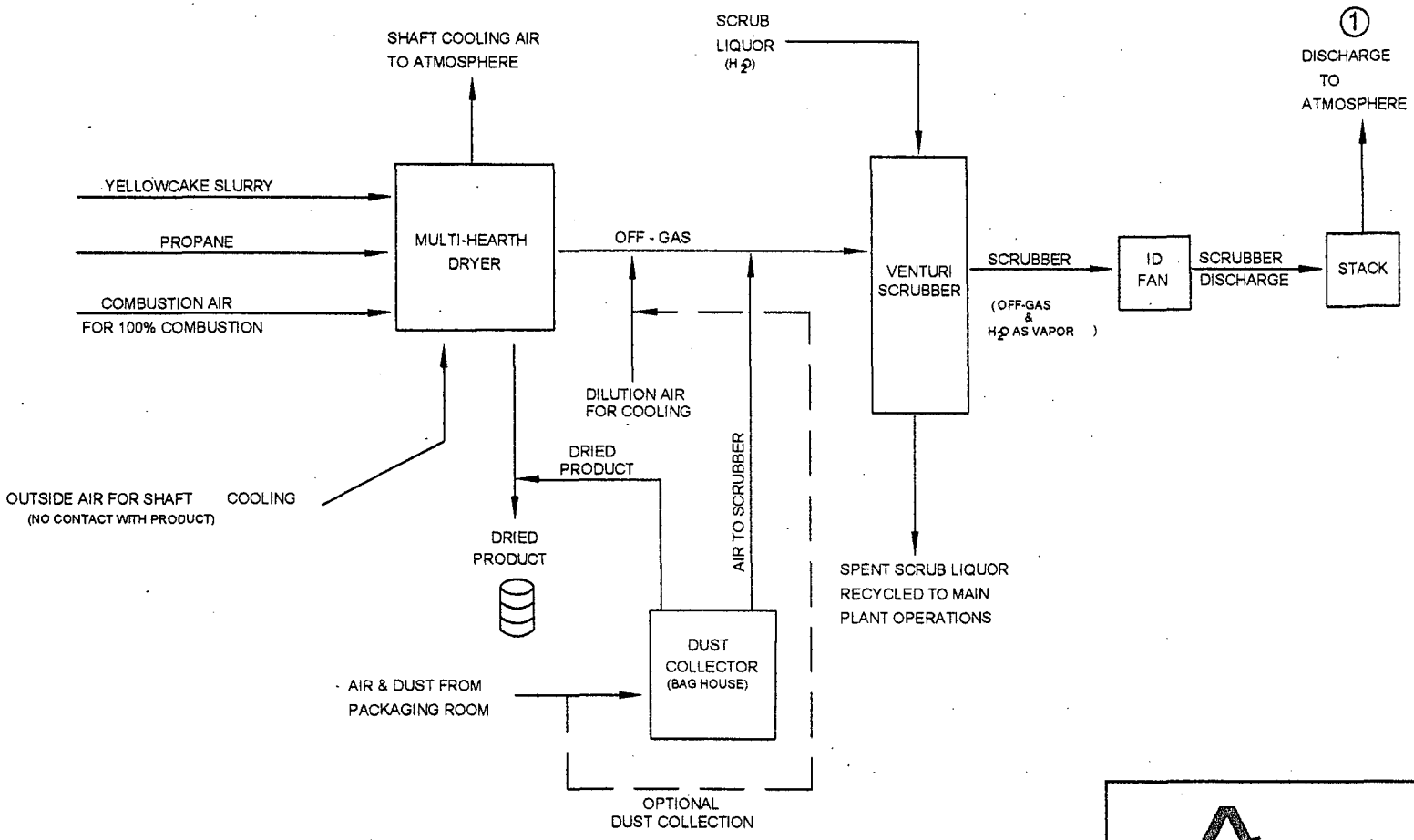

1 EMISSION POINT FOR DRYING & PACKAGING UNIT

AREVA

COGEMA Mining, Inc.
Christensen Project

Figure 4.1
Irigaray Process Unit
Drying/Packaging Unit Schematic

Geology: Enviro: Drafting: RMO Date: May, 2008 Revision:	State: Wyoming County: Johnson: Scale: Drawing ID: FIG IR Dryer Schematic.dwg

TABLE 4.1
SUMMARY OF STACK EMISSIONS SURVEY RESULTS
IRIGARAY DRYER AND PACKAGING CIRCUIT

Date	Emission[1]						
	Total Particulates (lbs./hr.)	% Permit Limit (0.30 lbs./hr.)	Unat Emissions (lbs./hr.)	Unat Conc. (µCi/ml)	Ra226 Conc. (µCi/ml)	Th230 Conc. (µCi/ml)	Pb210 Conc. (µCi/ml)
Dec. 1980	0.300	100	0.0180	1.62E-09	---	---	---
Dec. 1994	0.074	24.7	0.0047	3.06E-10	7.75E-13	6.70E-13	2.33E-12
Mar. 1995	0.149	49.7	0.0106	7.53E-10	3.86E-12	3.90E-12	3.93E-12
Sep. 1995	0.167	55.7	0.0050	3.37E-10	9.17E-13	<1.50E-12	<8.7E-13
Mar. 1996	0.056	18.7	0.0041	2.92E-10	1.51E-13	<1.13E-12	<1.13E-12
Sep. 1996	0.029	9.7	0.0035	2.04E-10	1.52E-12	1.68E-13	1.10E-12
May 1997	0.057	19.0	0.0059	4.28E-10	6.71E-13	1.34E-12	1.73E-12
Oct. 1997	0.065	21.7	0.0123	6.80E-10	2.51E-13	2.09E-12	3.35E-12
May 1998	0.084	28.0	0.0118	6.18E-10	2.50E-12	9.12E-13	ND
Oct. 1998	0.035	11.7	0.0063	3.08E-10	1.54E-12	1.21E-12	2.94E-11
Jun. 1999	0.070	23.3	0.0160	9.33E-10	9.46E-14	6.70E-13	7.82E-11
Dec. 1999	0.014	4.7	0.0107	6.67E-10	1.53E-13	9.01E-14	2.73E-12
May 2000	0.052	17.3	0.0073	5.73E-10	3.10E-13	3.30E-12	3.76E-11
Nov. 2001	0.071	23.7	0.0080	6.36E-10	<6.51E-13	<4.11E-12	<4.35E-13
Average[2]	0.071	23.7	0.008	5.18E-10	1.03E-12	1.62E-12	1.36E-11

[1]Emission data for each sample date are averages of two separate runs.

[2]Excludes the startup data from Dec. 1980.

4.2 LIQUIDS AND SOLIDS

4.2.1 CHRISTENSEN RANCH SITE

Liquid effluents from the operation are generated from both the mining and aquifer restoration processes. The restoration process and potential liquid effluents are discussed in Section 6 of this application.

Two liquid effluent streams are produced during the mining operations. The first stream is the typical 1% bleed (up to 40 gpm) taken from the plant process to control lixiviant migration in the wellfield. Several options are available for disposition of the bleed, including the following:

1. Direct injection into the deep disposal well (36 gpm).

2. Processing 160 gpm through the reverse osmosis unit, assuming a split of 75% permeate and 25% brine, with the following disposition: 120 gpm of high quality permeate to the permeate storage pond or to the lixiviant makeup system and reinjection; and 40 gpm brine to the deep disposal well, or to the evaporation ponds.

3. All or a portion of the bleed may go to the lined evaporation ponds.

The second liquid effluent stream from the process consists of the sand filter backwash solutions, resin transfer wash water, and plant washdown waters. These solutions comprise approximately 5 gpm, on a periodic basis, and are diverted to a lined solar evaporation pond or the deep disposal well after usage.

Sanitary wastes from the office facility are disposed of by a state approved septic tank/leach field system. Details of liquid effluent retention devices are provided in the following sections.

4.2.1.1 Lined Evaporation Pond Design

The lined solar evaporation ponds were initially designed to provide a surface area and capacity capable of evaporating a 5 gpm process effluent stream. The four pond system was based on two major design considerations. First, the pond system is capable of evaporating the process effluent over a ten year period. Secondly, the pond system is configured to have the capability for totally emptying the contents of one pond into the remaining pond(s).

The four lined solar evaporation ponds were designed to meet the requirements of the U.S.

Nuclear Regulatory Commission's Guideline 3.11 in regard to the use of synthetic or natural materials as liners for the construction of evaporation ponds for uranium recovery facilities. As discussed above, the ponds have the capacity to evaporate the process waste stream plus additional, emergency freeboard capacity to allow the dewatering of any one pond into the remaining pond(s). The four ponds are used to evaporate the process effluent stream, and are used as a source of backwash surge water for the plant sand filter system.

A computerized operation study was used to evaluate the inflow (process effluent and precipitation) and outflow (evaporation) from the system on a monthly basis for a period of ten years. Precipitation inflow to the ponds was limited to precipitation which falls on the area within the pond dikes since drainage ditches are provided to channel surface runoff around the ponds. Monthly evaporation rates for the area were used to optimize the design of the ponds.

The evaporation pond geometry chosen was necessitated by the gently sloping topography of the satellite plant area. Long, rectangular ponds placed parallel to the contours reduce the need for extremely large cuts or fills and minimize the amount of embankment storage. The four ponds have identical capacities and inside dimensions. The dimensions and pond capacities are as follows:

POND ID	NO.	SIZE (feet)	DEPTH (feet)	FREE-BOARD (feet)	CAPACITY AT OPERATING LEVEL (Acre-feet)	TOTAL CAPACITY (Acre-feet)
CR-1, CR-2, CR-3 and CR-4	4 total	100 X 400 each	9.5	2	5.51 each 11.02 - two 22.04 - four	7.68 each 30.72 - four

The liner consists of 36 mil (0.036 inch) reinforced Hypalon which is placed over leak detection media (sand or fine gravel). The sand drains to leak detection piping which consists of 30 inch diameter slotted PVC pipe in gravel-filled trenches at the perimeters of the pond bottoms. The base of the ponds are graded to slope toward the sides to facilitate the drainage of any leakage to the nearest collection pipe. The collection pipes are sloped in approximately 70-foot long sections on each side of the pond to drain the six sumps which serve as collection points for the leak detection system. Taps consisting of 4-inch

diameter PVC pipe are installed at each end of the sumps to allow inspection and sampling of the six sumps. The leak detection taps are tested on a weekly basis to check for potential pond leaks.

The use of leak detection sand beneath the Hypalon liners in the two constructed evaporation ponds eliminated the need for constructing vents in the liner material. Any gases produced under the liner are vented through the leak detection media. After construction, water placed in the ponds has prevented billowing or air foil effects.

4.2.1.2 Permeate Storage Pond Design

The permeate storage pond system at the Christensen Ranch satellite facility is designed to store high-quality, low-TDS permeate from the reverse osmosis process. The permeate quality will meet WYPDES water quality standards for surface discharge from uranium solution mines. Only one of the two ponds has been constructed to date; the other pond will be constructed on an as-needed basis.
Two trapezoidal storage ponds have been designed, each with a capacity of approximately 26 acre-feet. This capacity was designed initially to provide storage for a partial reverse osmosis bleed stream of approximately 25 gpm for about 1.3 years of plant operation neglecting evaporation. The stored permeate can be utilized for process solution makup, drilling water supply, wellfield restoration, deep well disposal, or if approved, for land application or surface discharge.

The permeate storage pond system consists of two earthen lined ponds with identical inside dimensions. The ponds do not require synthetic lining or leak detection systems since they are only used to store the reverse osmosis permeate, which meets WYPDES water quality limitations. Drainage ditches are used where required to channel surface runoff away from the ponds. The storage ponds were designed to have a normal operating depth of 16 feet with an additional 2 feet of freeboard for a total depth of 18 feet. The maximum depth of water storage behind the embankment is 10 feet resulting in a maximum embankment storage capacity of 19.2 acre-feet. The rest of the storage capacity is created by excavation below grade.

4.2.1.3 Spillage Containment System

The Christensen Ranch satellite plant building is constructed with a curbed concrete floor equipped with a floor drain and sump system to control and reclaim spill and washdown water. The sump system is equipped with a pump which delivers liquid contents to the lined evaporation pond system or back into the plant process circuit.

All liquid chemical storage tanks located outside of the plant building, such as for hydrochloric or sulfuric acid, gasoline or diesel fuel storage, are bermed to contain the contents of the tank should the vessel rupture.

4.2.1.4 Other Liquid Effluent Disposal Options

Other liquid effluent disposal options which COGEMA has considered for the Christensen Ranch satellite facility are surface discharge after treatment, deep injection well disposal and land application. Currently, COGEMA maintains a WYPDES permit for surface discharge of restoration solutions. COGEMA has also installed two licensed deep disposal wells for injection of well field bleed, reverse osmosis brine and other liquid effluents from the process plant. The disposal wells are discussed below.

On March 15, 1989, approval was received from WDEQ (permit UIC 88-545) and the USNRC (Condition No. 24 of SUA-1341) for a disposal wellfield for Christensen Ranch. The Christensen Ranch Disposal Wellfield authorized two injection sites: the Federal Holler Draw 7-B well in the center of NW1/4 Section 7, T44N, R76W (an existing oil well), and the Christensen 18-3 well in the NE1/4 NW 1/4 Section 18, T44N, R76W (a plugged and abandoned oil well) in Johnson County, Wyoming. In June, 1995, the WDEQ permit was modified to allow the construction of a new disposal well at the plant site in lieu of the existing Federal Holler Draw 7-B.

The originally permitted injection zone for COGEMA DW No. 1 was the entire thickness of the Teckla, Teapot and Parkman formations, ranging from approximately 7,500 feet below ground surface to a total depth of approximately 8,500 feet below ground surface.

Because of the poor performance of the injection zone COGEMA applied for and received approval for an amended injection zone in the Lance formation. COGEMA currently holds Permit No. UIC 00-340 that authorizes four Class I Non-Hazardous disposal wells located at the Christensen Ranch in-situ leach uranium mine in Johnson County, Wyoming. Two of these wells are installed and operating (COGEMA DW No. 1 and Christensen 18-3) and two are permitted but not yet installed (COGEMA DW No. 2 and DW No. 3).

The injection fluid for the two permitted disposal wells is specifically limited to fluids produced at the Irigaray or Christensen Ranch facilities with allowances to accept oil field or other solutions after approval by WDEQ. Based on the results of a step injection tests in the surface injection pressure is limited to 1,200 psi for COGEMA DW No.1 and 1,320 psi for Christensen 18-3. Annulus pressures are maintained in the range of 200 to 800 psi for both wells.

In order to prevent fracturing of the confining strata, injection volume and/or pressure are controlled and monitored. The injected fluid is analyzed and sampled quarterly for TDS, bicarbonate, carbonate, and total radium. Results of this testing are submitted in a quarterly report to WDEQ. Mechanical integrity tests of the wells are performed with the test reports submitted to the WDEQ for review and approval.

4.2.1.5 Solid Effluents And Waste Disposal

Minor amounts of solid wastes are produced during the satellite operation. Solid residues from the sand filter systems, tank sediments, and sump sediments, as a result of the process effluent stream, will remain in the lined evaporation ponds until final decommissioning. These materials will be designated as byproduct materials and will be disposed of in a USNRC approved disposal area.

Other solid wastes such as trash, spent resin, and contaminated equipment are generated during the mining process. Waste materials and trash which are not contaminated are disposed of in an off-site industrial land fill. Unusable contaminated equipment, spent resin, bag filters or other contaminated materials are stored in a secured area until final disposition in a USNRC approved disposal area.

COGEMA is currently authorized to dispose of byproduct materials in the Pathfinder Mines Corporation Shirley Basin tailings facility. COGEMA maintains a contract with Pathfinder for the disposal of such materials, and is currently shipping byproduct materials to Shirley Basin from both the Christensen Ranch and Irigaray facilities.

4.2.2 IRIGARAY FACILITY

4.2.2.1 Lined Evaporation Pond Design

There are a total of seven lined ponds permitted at the Irigaray site. These include five lined evaporation ponds and two lined restoration storage ponds. The five lined evaporation ponds were constructed in 1978 and 1979 under WDEQ Permit to Mine No. 478 and Source Material License SUA-1341, as were the two lined restoration ponds constructed in 1979.

Currently (May 2008), five of the lined ponds (Ponds A,C,D,E, and RA) have been decommissioned. The liners, leak detection system, and all contaminated materials have been removed and disposed of at the licensed Shirley Basin facility. The berms and supporting earthworks have been maintained intact. It is anticipated that a combination of ponds A,C,D, and RA will be re-installed as necessary to support the evaporative disposal of process water, up to 25gpm, resulting from resumption of uranium recovery operations. Capacities for the five lined evaporation ponds are as follows:

POND ID	SIZE	DEPTH (feet)	FREE-BOARD (feet)	FREE-BOARD CAPACITY (Acre/Ft)	TOTAL CAPACITY (Acre/Ft)	EVAP-ORATIVE CAPACITY (Acre/Ft/Yr.)
A[1]	160X390	6	2	6.3	10.0	6.12
B	250X250	6	2	6.3	9.9	6.02
C[1]	160X390	6	2	6.3	10.0	6.12
D[1]	250X250	6	2	6.3	9.9	6.02
E[1]	100X250	6	2	2.7	4.4	2.73

[1]Has been partially decommissioned and would require reconstruction of drain system and leak detection system, and re-installation of Hypalon liner prior to any further use.

4.2.2.2 Restoration Pond Design

Construction techniques for the two restoration storage ponds were essentially the same as for the lined evaporation ponds. As noted above Pond RA has been partially decommissioned and would require reconstruction prior to any future use. Capacities of these two ponds are as follows:

POND ID SIZE	DEPTH (feet)	FREE-BOARD (feet)	FREE-BOARD CAPACITY (Acre/Ft)	TOTAL CAPACITY (Acre/Ft)	EVAP-ORATIVE CAPACITY (Acre/Ft/Yr.)
RA[1] Polygonal	20	8	19.8	39.9	6.10
RB Polygonal	20	8	19.8	39.9	6.10

[1]Has been partially decommissioned and would require reconstruction of drain system and leak detection system, and re-installation of Hypalon liner prior to any further use.

4.2.2.3 Spillage Containment System

The Irigaray facility building is constructed with a curbed concrete floor equipped with a floor drain and central sump system to control and reclaim spill and washdown water. The sump system is equipped with a pump which delivers liquid contents to the lined evaporation pond system or back into the plant process circuit.

4.2.2.4 Other Liquid Effluent Disposal Options

Another liquid effluent disposal option which COGEMA has considered for the Irigaray site is deep well injection. On May 27, 1992, approval was received from WDEQ (permit UIC-247) and the USNRC (Condition No. 24 of SUA-1341) for a disposal wellfield for the Irigaray site. The Irigaray Disposal Wellfield consists of two injection sites, DW-1, located in the W1/2 NW1/4, Section 9, T45N, R77W, and DW-2, located in the E1/2 NE1/4, section 8, T45N, R77W, both in Johnson, County, Wyoming. To date neither well has been constructed. The injection fluid for these two wells is specifically limited to fluids produced at the Irigaray or Christensen Ranch facilities, with allowances to accept oil field or other solutions after approval by WDEQ. Specific allowances for certain industrial wastes are contained in the permit. Injected volume as currently permitted is 180 gallons per minute (6,171 barrels per day or 259,182 gallons per day) into each of the two wells.

4.2.2.5 Solid Effluents And Waste Disposal

Dissolved solids from all waste streams will be retained in lined evaporation ponds. All pond solids will eventually be transported to an off-site licensed tailing facility when final decommissioning is effected. After solid wastes in the evaporation ponds are removed, the Hypalon liners will also be removed to an off-site USNRC approved licensed tailings facility if contaminated. At that time, a gamma survey will be conducted to identify any contaminated surface present. If any contaminated material is found, this also will be removed to an off-site USNRC approved licensed tailing facility prior to final reclamation of the pond sites.

Chemicals separated by conventional water purification techniques, and further concentrated by evaporation, will be generated in the restoration program. Barium sludges will be present in the lined restoration pond. Since continuously better water quality is attained as restoration proceeds, a variable amount of waste solids will be generated throughout the restoration operation.

As previously stated, COGEMA maintains a contract for byproduct materials disposal with Pathfinder Mines Corporation, Shirley Basin tailings facility.

4.3 CONTAMINATED EQUIPMENT

The uranium recovery process does not use equipment such as wooden thickener tanks which could become contaminated with radium. Rather, the plant is constructed almost entirely of plastic, fiberglass and stainless steel, all of which can be cleaned of contamination to levels allowable for unrestricted use and removed from the site at the end of the mining activities. Alternately, process equipment may be transferred to another licensed operation site for re-use in similar uranium extraction operations. Equipment that is not decontaminated or transferred to another licensee will be shipped to a licensed disposal site (currently Shirley Basin).

Release of equipment and materials from the controlled areas shall be in accordance with "Guidelines for Decontamination of Facilities and Equipment Prior to Release for Unrestricted Use or Termination of Licenses for Byproduct or Source Materials, September 1984", issued by the U.S. Nuclear Regulatory Commission.

5.0 OPERATIONS

COGEMA Mining, Inc. (COGEMA) is a subsidiary of COGEMA Resources, Inc., a wholly owned subsidiary of AREVA NC, Inc. AREVA NC, Inc. is a United States subsidiary of COGEMA, S.A.E. located in France. COGEMA maintains a United States headquarters in Mills, Wyoming where site licensing actions originate. All COGEMA operations, including the Irigaray Mine and Christensen Ranch satellite operations, are conducted in conformance with applicable laws, regulations and requirements of the various regulatory agencies. Irigaray Mine and Christensen Ranch satellite operations under Mine Permit No. 478 shall be conducted in compliance with the conditions as stated in Section 9, Chapter 11, Noncoal In situ Mining, Department of Environmental Quality, Land Quality Division Rules, as adopted May 3, 2005. The responsibilities described below have been designed to both ensure compliance and further implement COGEMA's policy for providing a safe working environment with cost effective incorporation of the philosophy of maintaining radiation exposures as low as is reasonably achievable (ALARA).

5.1 CORPORATE ORGANIZATION AND ADMINISTRATIVE PROCEDURES

The COGEMA organizational chart, as it pertains to the responsibility for radiation safety and environmental protection at the Christensen Ranch satellite and Irigaray recovery facility is given as Figure 5.1. The personnel identified are responsible for the development, review, approval, implementation, and adherence to operating procedures, radiation safety programs, environmental and groundwater monitoring programs, as well as routine and non-routine maintenance activities. Specific responsibilities of the organization are provided below.

5.1.1 GENERAL MANAGER, OPERATIONS

The General Manager, Operations, has the overall responsibility for each level of management and the radiation, safety and environmental programs for all of COGEMA's in-situ leach uranium operations, including the Texas operations and the Irigaray and Christensen Ranch projects. The General Manager has responsibility for the mine development, engineering and operational procedures. These responsibilities include the development, review and implementation of all production related operating procedures and the implementation of safety programs, associated quality assurance programs and routine and non-routine maintenance activities. The General Manager has the authority to terminate immediately any or all portion(s) of the project that have been determined to be a threat to health or property as indicated in reports from the Radiation Safety Officer or his designee.

The General Manager works closely with the Manager, Environmental and Regulatory Affairs, the Radiation Safety Officer, and the Operations Manager to assure that all activities at each site are conducted in a safe, prudent and responsible manner in compliance with all applicable regulations. The General Manager reports to the President, COGEMA Mining, Inc. in Bessines Sur Gartempe, France.

5.1.2 OPERATIONS MANAGER

The Operations Manager is responsible for all operational aspects of the Irigaray and Christensen Ranch Sites. These aspects include the development, review and implementation of all operating procedures and implementation of safety programs, associated quality assurance programs and routine and non-routine maintenance activities. The Operations Manager is also responsible for adherence to all regulatory license conditions, stipulations and regulations. The Operations Manager has the authority to terminate immediately any or all portion(s) of the project that have been determined to be a threat to health or environment as indicated from the Radiation Safety Officer or Radiation Safety Technician. The Radiation Safety Officer, in addition to the Plant Foreman and the Maintenance Foreman, report directly to the Operations Manager. The Operations Manager reports to the General Manager.

5.1.3 MANAGER, ENVIRONMENTAL AND REGULATORY AFFAIRS

The Manager, Environmental and Regulatory Affairs, is responsible for the maintenance of all operational licenses and permits for continued mine operations including modifications, amendments and renewals. This individual also assists and guides the Radiation Safety Officer, if and when necessary, in his routine and special responsibilities. The Manager, Environmental and Regulatory Affairs has oversight for the development, review, approval, implementation and adherence to radiation safety programs, environmental and groundwater monitoring programs and associated quality assurance programs for the Wyoming sites. The Manager, Environmental and Regulatory Affairs has both the responsibility and authority to suspend, postpone or modify any work activity that is unsafe or potentially in violation of USNRC's regulations or license conditions, including the ALARA program. The Manager, Environmental and Regulatory Affairs reports to the General Manager.

5.1.4 RADIATION SAFETY OFFICER

The Radiation Safety Officer (RSO) has direct responsibility for the development, review, approval, implementation and adherence to radiation safety programs, industrial safety programs, environmental monitoring programs and associated quality assurance programs for the Irigaray and Christensen Ranch Sites.

FIGURE 5.1
COGEMA ORGANIZATION CHART

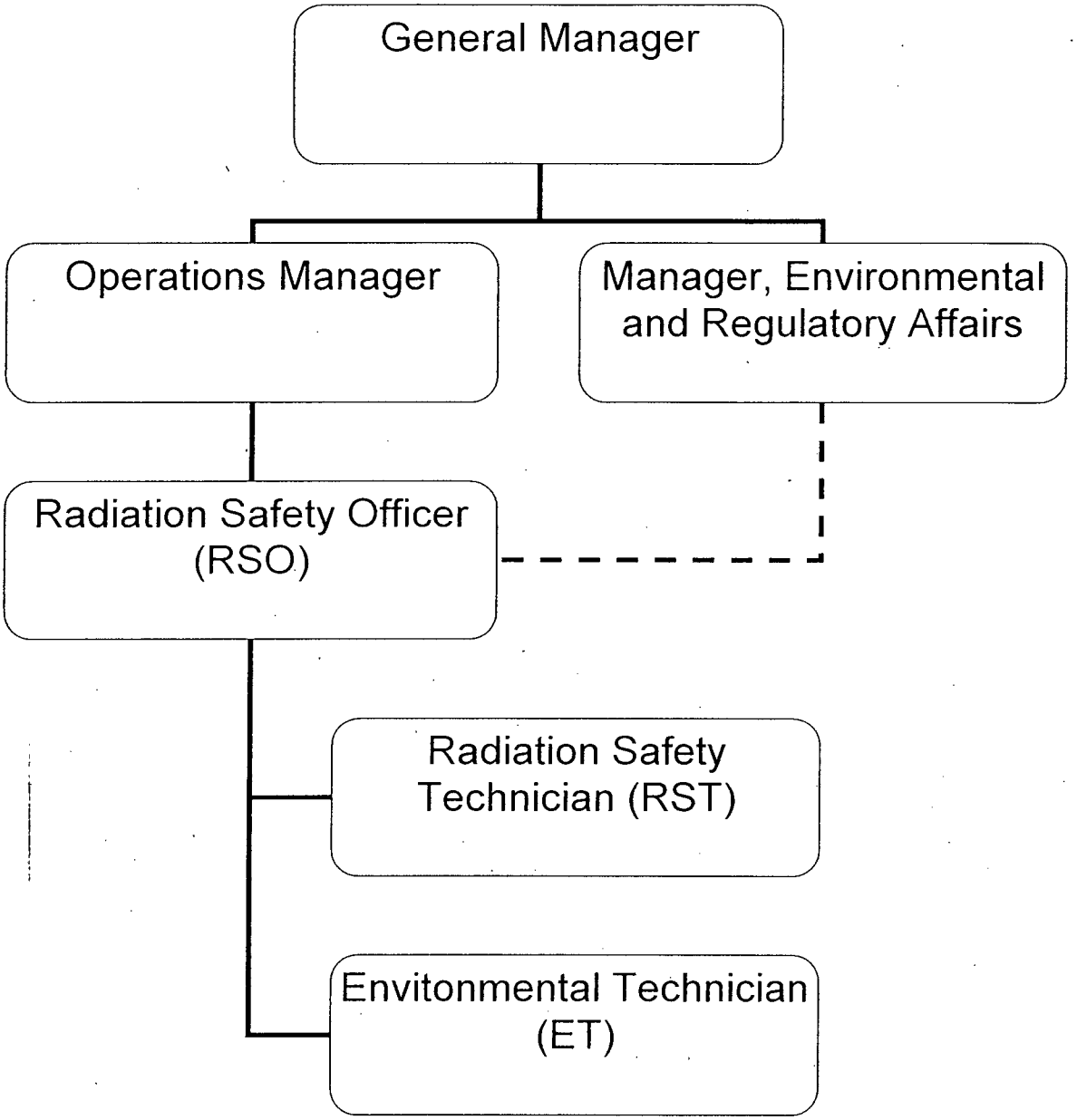

The RSO is also responsible for the collection and interpretation of all safety and environmental monitoring data, and the proper recording and reporting of such. The RSO conducts routine training programs for the supervisors and employees with regard to the proper application of radiation protection and industrial safety procedures. This individual is also responsible for the implementation of and adherence to all regulatory license requirements and fulfillment of reporting requirements. The RSO, with assistance from the Radiation Safety Technician (RST) or Environmental Technician, or other qualified designee, personally inspects facilities to verify compliance with all applicable health physics and radiation safety requirements. The RSO has both the responsibility and authority to suspend, postpone or modify any work activity that is unsafe or potentially a violation of USNRC's regulations or license conditions, including the ALARA program. The RSO reports directly to the Operations Manager.

5.1.5 RADIATION SAFETY TECHNICIAN (RST)

The Radiation Safety Technician (RST) assists the RSO with his routine radiation safety surveys, employee exposure records keeping, facility inspections, training, and industrial safety responsibilities. The RST reports directly to the RSO.

5.1.6 ENVIRONMENTAL TECHNICIAN

The Environmental Technician (ET) is responsible for the implementation of all environmental monitoring programs at both the Irigaray and Christensen Ranch sites. Specific duties include groundwater and surface water sampling, air monitoring and evaporation pond inspections. In addition, the ET is trained to act as an RST and may assist the RSO with the implementation of the radiological and industrial safety programs. The ET is responsible for the orderly collection and interpretation of all monitoring data. The ET reports directly to the RSO.

5.1.7 RADIATION SAFETY AUDITOR

COGEMA Mining, Inc. utilizes either the Manager, Environmental and Regulatory Affairs or an outside radiation protection auditing service to provide assurance that all radiation health protection procedures and license condition requirements are being conducted properly at the Irigaray and Christensen Ranch Sites. Any outside service used for this purpose is qualified in radiation safety procedures as well as environmental aspects of solution mining operations.

5.2 MANAGEMENT CONTROL PROGRAM

5.2.1 OPERATING PROCEDURES

Written standard operating procedures (SOPs) have been developed for all process activities, including those activities involving radioactive materials, for both the Irigaray and

Christensen Ranch facilities. Where radioactive materials handling is involved, pertinent radiation safety practices are incorporated into the SOP. Additionally, written SOPs have been developed for non-process activities including environmental monitoring, health physics procedures, emergency procedures, and general safety. Written SOPs have been developed, reviewed and approved by the appropriate supervisors including the RSO and the Manager, Environmental and Regulatory Affairs. All written SOPs are reviewed for radiological protection aspects and approved by the RSO prior to operations. Additionally, the RSO reviews all SOPs on an annual basis. Applicable current SOPs are referenced throughout this document. SOPs are revised as necessary to meet changing operational and regulatory requirements. Any revisions made to the SOPs are reviewed and approved by the RSO and appropriate supervisor prior to implementation. Written SOPs are kept in the areas of the plant facility where they are used by employees.

For the performance of non-routine work or maintenance activities where the potential for radiation exposure exists and for which written operating procedures have not been prepared, a radiation work permit (RWP) is required. The RWP specifies the necessary radiological safety precautions, equipment or specialized clothing, and radiological surveys required for performing the job. RWPs are issued by the RSO or his designee by way of specialized training.

5.2.2 SAFETY AND ENVIRONMENTAL REVIEW PANEL (SERP)

COGEMA currently possesses a Performance Based License (PBL) and desires to continue with a PBL as an outcome of this renewal application. COGEMA has a Safety and Environmental Review Panel (SERP) which functions to fulfill the requirements of existing license condition 9.4. The reader is referred to condition 9.4 of License Number SUA-1341, Docket No. 40-8502.

One member of the SERP shall have expertise in management and shall be responsible for managerial and financial approval changes; one member shall have expertise in operations and shall have responsibility for implementing any operational changes; and, one member shall be either the Radiation Safety Officer or equivalent (typically, the Manager, Environmental and Regulatory Affairs), for the responsibility of assuring changes conform to radiation safety and environmental requirements. Additional members may be included in the SERP as appropriate, to address technical aspects such as health physics, hydrology, engineering or other technical disciplines.

COGEMA currently has in place an SOP which outlines the SERP's responsibilities in conducting safety and environmental evaluations of changes to the application, tests or experiments to determine whether an amendment to the license is required.

5.3 MANAGEMENT AUDIT AND INSPECTION PROGRAM

The following internal inspections, audits and reports are performed for the Irigaray facility and Christensen Ranch satellite operations:

Daily

The RSO or a qualified designee conducts a daily documented walk-through inspection of the Irigaray plant during periods of dryer operation to determine that radiation control practices are being implemented appropriately.

Weekly

The RSO or a qualified designee conducts a weekly inspection of the process area to observe general radiation safety control practices and make or review required changes in procedures and equipment. Any items of non-compliance or other problems are reviewed with the Operations Manager or General Manager.

Monthly

The RSO provides a written summary of the month's radiological activities at the Christensen Ranch and Irigaray facilities. The report includes a review of all monitoring and exposure data for the month, a summary of worker protection activities, a summary of all pertinent radiation survey records, a discussion of any trends in the ALARA program, and a review of adequacy of the implementation of the USNRC license conditions. Recommendations are made for any corrective actions or improvements in the process or safety programs.

Annually

On an annual basis, an audit of the radiation protection and ALARA program is conducted and a written report of the results submitted to corporate management. The audit team consists of either the Manager, Environmental and Regulatory Affairs and/or the outside radiation safety auditor identified in Section 5.1.6, the RSO, and the Operations Manager. The RSO may accompany the audit team, but may not participate in the conclusions.

The annual ALARA audit report summarizes the following data:

1. Employee exposure records
2. Bioassay results
3. Inspection log entries and summary reports of mine and process inspections
4. Documented training program activities
5. Applicable safety meeting reports
6. Radiological survey and sampling data
7. Reports on any overexposure of workers
8. Operating procedures that were reviewed during this time period

The ALARA audit report specifically discusses the following:

1. Trends in personnel exposures
2. Proper use, maintenance and inspection of equipment used for exposure control
3. Recommendations on ways to further reduce personnel exposures from uranium and its daughters

The ALARA audit report is reviewed by the General Manager with the ALARA audit team. Implementations of the recommendations to further reduce employee exposures, or improvements to the ALARA program, are discussed at that time.

An audit of the Quality Assurance/Quality Control (QA/QC) program is also conducted on a biannual basis. The audit is performed by an individual qualified in analytical and monitoring techniques who does not have direct responsibilities in the areas being audited. The results of the QA/QC audit are documented and reported to the Manager, Environmental and Regulatory Affairs, the RSO and the General Manager. The RSO has the primary responsibility for the implementation of the QA/QC programs at the Irigaray and Christensen Ranch facilities.

5.4 QUALIFICATIONS

COGEMA Mining, Inc. project staff are highly experienced in the management of uranium development, mining and operations. The following minimum personnel specifications and qualifications are strictly adhered to.

The minimum qualifications for the Radiation Safety Officer (RSO) are as follows:

1. Education - A Bachelor's Degree or an Associate Degree in the physical sciences, industrial hygiene, environmental technology or engineering from an accredited college or university or an equivalent combination of training and relevant experience in uranium mill/solution mining radiation protection.

2. Health Physics Experience - A minimum of 1 year of work experience relevant to uranium mill/solution mining operations in applied health physics, radiation protection, industrial hygiene or similar work.

3. Specialized Training - A formalized, specialized course(s) in health physics specifically applicable to uranium milling/solution mining operations, of at least 4 weeks duration. The RSO attends refresher training on radiation health physics every two years.

4. Specialized Knowledge - The RSO, through classroom training and on-the-

job experience, possesses a thorough knowledge of the proper application and use of all health physics equipment used in the operation, the procedures used for radiological sampling and monitoring, methods used to calculate personnel exposures to uranium and its daughters, and a thorough understanding of the solution mining process and equipment used and how hazards are generated and controlled during the process.

The Radiation Safety Technician (RST) will have the following combinations of education, training and experience:

1. Education - An associate degree or 2 years or more of study in the physical sciences, engineering or a health-related field.

2. Training - At least a total of 4 weeks of generalized training in radiation health protection applicable to uranium mills/solution mining operations.

3. Experience - One year of work experience using sampling and analytical laboratory procedures that involve health physics, industrial hygiene, or industrial safety measures to be applied in a uranium mill/solution mining operation.

5.5 TRAINING

All site employees, and contracted personnel when present, at the Irigaray and Christensen Ranch ISL Project are administered a training program based upon the COGEMA Radiation Safety Training Plan covering radioactive material handling and radiological emergency procedures. This training program is administered in keeping with standard radiological protection guidelines. The technical content of the training program is under the direction of the Manager, Environmental and Regulatory Affairs. Training is conducted by the RSO.

5.5.1 TRAINING PROGRAM CONTENT

Visitors

Visitors to the Irigaray and Christensen Ranch ISL Project receive hazard training on the radiation safety requirements while in the restricted area and survey requirements upon leaving the restricted area.

Contractors

Contractors receive the same hazard training as visitors. In addition, contractors receive additional radiation safety training when applicable to their specific tasks.

Permanent Employees

The COGEMA Radiation Safety Training Program incorporates the following topics discussed in Regulatory Guide 8.31:

1. Fundamentals of health protection;
2. Personal hygiene at uranium mines;
3. Facility-provided protection;
4. Health protection measurements;
5. Mine emergency procedures.

As part of the employee initial training program, COGEMA issues to each new employee the following handouts:

1. Health Physics Manual for radiation training and decontamination procedures;
2. Regulatory Guide 8.29, "Instructions Concerning Risks From Occupational Radiation Exposure";
3. Regulatory Guide 8.13, "Instructions Concerning Prenatal Radiation Exposure"(females only);
4. Uranium-238 Decay Chain table;
5. Standard Operating Procedure HP-1, "Alpha Contamination Monitoring for Release From a Restricted Area";
6. Standard Operating Procedure HP-21, "Respiratory Protection Program" (applicable only to employees who need to be trained to wear a respirator and have been medically certified to do so).

In addition to the training described for all employees, certain employees receive additional training as follows:

Supervisors

Supervisors receive additional annual training relating to their supervisory responsibilities in the area of worker radiation protection.

RSTs

At least one week of generalized classroom training is provided to RSTs by an outside instructor who is a specialist in such training.

5.5.2 TESTING REQUIREMENTS

A written test relevant to the principles of radiation safety and health protection in uranium mining is administered at the end of the training course. Employees who fail the test are

retested after receiving additional training.

5.5.3 ON-THE-JOB TRAINING

RST

On-the-job training is provided to the RST in radiation exposure monitoring and exposure determination programs, instrument calibration, plant inspections, posting requirements, respirator programs and Health Physics Standard Operating Procedures.

During the first three months of employment the RST receives on-the-job training to conduct the following:

1. Daily facility radiation inspections in accordance with Standard Operating Procedure HP-16;
2. Air surveys for radon daughters and airborne uranium in accordance with Standard Operating Procedures HP-6 and HP-7;
3. Gamma, alpha and equipment release surveys in accordance with Standard Operating Procedures HP-2, HP-3, HP-8 and HP-10;
4. Survey instrument calibration checks and air sampling pump calibrations in accordance with Standard Operating Procedures HP-13, HP-14 and HP-15;
5. Maintenance and inspection of respirators in accordance with Standard Operating Procedure HP-22.

During the second three months of employment the RST receives on-the-job training to conduct the following:

1. Assign Radiation Work Permits in accordance with Standard Operating Procedure HP-11;
2. Calculate and document internal exposures in accordance with Standard Operating Procedure HP-5;
3. Determining radiological posting requirements in accordance with Standard Operating Procedure HP-24.

5.5.4 REFRESHER TRAINING

Following initial radiation safety training, all permanent employees receive on-going radiation safety training as part of the routine quarterly safety meetings. This on-going training is used to discuss problems and questions that have arisen in the past quarter, any relevant information or regulations that have changed, exposure trends and other pertinent topics.

5.5.5 TRAINING RECORDS

Records of training are kept for a period of five years for all process employees.

5.6 SECURITY

5.6.1 IRIGARAY SITE SECURITY

Entrances to the Irigaray Site are gravel roads to the north and south of the facility. Each entrance to the site is posted to alert visitors that any building or area within the facility may contain radioactive material and that permission is required prior to entry. In addition, the immediate mine permit area (WDEQ permit boundary) is fenced, with gates on each access route which can be locked. The plant site is within the fenced permit area and properly posted in accordance with 10 CFR § 20.1902 (e) and COGEMA Standard Operating Procedure HP-24, "Radiological Posting Requirements". Posting and warning signs are placed at conspicuous places around the perimeter of the site. All visitors to the Irigaray Site are required to register at the main office and are not permitted inside the plant or wellfield areas without proper authorization. Inexperienced visitors are escorted unless they are frequent visitors who have been instructed regarding areas to be avoided. The process plant is posted as a hard-hat and safety glasses area. Strict adherence to safety rules restricts unauthorized persons from access. The access road through the site often carries passing traffic (such as oil/gas workers) that are allowed through the property unimpeded since they have no contact with radioactive materials.

5.6.2 CHRISTENSEN RANCH SITE SECURITY

Security for the Christensen Ranch satellite facility is provided by the personnel working at the facility. Security has not been a problem at the facility due to the remote location and private access road. The access to the site is a gravel road to the south of the plant site. The entrance to the facility is posted to alert all visitors that any building or area within the facility may contain radioactive material and that permission is required prior to entry. The plant site is properly posted in accordance with 10 CFR § 20.1902 (e) and COGEMA Standard Operating Procedure HP-24, "Radiological Posting Requirements". Posting and warning signs are placed at conspicuous places around the perimeter of the site. The entrance to the site is equipped with a lockable gate. Pump houses in the wellfields which are near the county road and could be more easily accessed are equipped with a locking door with an access code to prevent access by unauthorized personnel.

All visitors to the Christensen Ranch satellite facility are required to report to the site office where they register and receive proper safety briefings prior to entering any process areas. Inexperienced visitors are escorted unless they are frequent visitors who have been instructed regarding areas to be avoided. The plant, wellfield and related mining activity areas are posted hard-hat and safety glasses areas. Pond areas are fenced and appropriately posted. Due to the anticipated increase in coal bed methane drilling/extraction activity in the general area, coal bed methane personnel will be proximate to COGEMA wellfields, but will not spend significant time actually in wellfields (it is

assumed that CBM personnel may have to travel by vehicles through the wellfields). The historically low exposure rates related to COGEMA wellfields would preclude the need to treat the wellfield as a formal restricted area. Posting header buildings as part of the restricted area (and controlling access to these buildings) will be sufficient. If CBM personnel will be traversing COGEMA wellfields, COGEMA will provide appropriate radiation safety training for those personnel. Pursuant to 10 CFR 20.1502, no exposure monitoring for transitory CBM personnel will be necessary.

5.7 RADIATION SAFETY CONTROLS AND MONITORING

COGEMA has a strong corporate commitment to and support for the implementation of the radiological control program at Irigaray and Christensen Ranch. This corporate commitment to ALARA has been incorporated into the radiation safety controls and monitoring programs described in the following sections. This license renewal application contains the results of the radiological control program since 1995. Each area in this section describes the historical program and the results of monitoring since 1995. Where the monitoring results indicate that the program should be modified, proposed changes in the program are also discussed.

5.7.1 EFFLUENT CONTROL TECHNIQUES

5.7.1.1 Gaseous And Airborne Particulates

Irigaray Gaseous and Airborne Particulate Control Techniques

Under routine production operations, there are two radioactive effluents at the Irigaray facility:

1. Release of Radon-222 gas from the elution columns;
2. Release of yellowcake through the multi-hearth dryer exhaust system.

Venting of non-pressurized tanks to the atmosphere outside of the plant building minimizes personnel exposure. The plant buildings are equipped with exhaust fans to remove radon that is released in the plant building, and are used on an as needed basis. No significant personnel exposure to Rn-222 gas has been noted during operation of the Irigaray facility. Results of radon daughter monitoring in the process areas are contained in Section 5.7.3.

The primary source of airborne particulates at the Irigaray facility is the multihearth dryer. The exhaust system for the multi-hearth dryer is equipped with a high intensity Venturi scrubber system to remove contaminants prior to discharge to the atmosphere. This system is designed to remove approximately 90 to 95% of particulates. Further information on the scrubber system was previously discussed in Section 4 of this renewal document. The efficiency of the scrubber system is demonstrated by the uranium concentration measured in the stack effluents. Stack tests conducted in 1995 through 2001 showed that

the particulate emissions from the dryer averaged less than two percent and a maximum of 4.4 percent of the standard allowable specified in COGEMA's Permit No. OP-254.

In the event that the yellowcake product is not dried and is stored in existing tanks and shipped as a slurry, the particulate emissions from the dryer are eliminated.

Christensen Ranch Gaseous and Airborne Particulate Control Techniques

The Christensen Ranch satellite facility produces one radioactive airborne effluent, Radon-222 gas, as a result of operations as previously discussed in Section 4. Radon-222 gas primarily remains in solution because the majority of the average 4,000 gpm plant flow is in a pressurized system. Radon gas emissions in the unpressurized lixiviant makeup circuit. will be nil since RO permeate water will be used to make the additional lixiviant. Regardless, unpressurized tanks are vented directly to the atmosphere outside of the plant building to minimize personnel exposures. Another potential release of radon gas may occur during the resin transfer from a loaded IX column to the resin tanker trailer. During this process, the IX column is also vented to the atmosphere directly outside of the plant building. No significant personnel exposure to Rn-222 gas has been noted during operation of the Christensen Ranch facility. Results of radon daughter monitoring in the process areas are contained in Section 5.7.3. As an additional protective measure, the plant building is equipped with area exhaust fans.

5.7.1.2 Spill Contingency Plans

Spills as a result of operations at the Christensen Ranch and Irigaray facilities were considered in the Environmental Assessment prepared by the USNRC in consideration of the 1996 license amendment application to allow the continuation of operations. COGEMA has developed SOPs which provide instructions for spill response. The following spill scenarios and associated engineering and administrative controls apply to operations at the Irigaray or Christensen Ranch facilities.

1. A spill of barren or pregnant lixiviant as a result of surface pipe failures. Leaks would be detected by a loss of injection pressure, direct observation of mine site personnel, or an imbalance in injection/recovery fluids. SOPs provide general instructions for detecting and responding to a spill in the well field. Spillage of leach solution which might result from accidental line ruptures or accidental spills should not degrade the surface soil. Any area affected by such an event would be readily identifiable and decontaminated. In the case that a line rupture or accidental spill does occur which causes the release of a significant amount of pregnant leach solution, dikes, ditches, or other small impoundments would be built by mine site personnel to keep the affected areas as small as possible. Clean-up of the spill consists of pumping the fluids with portable equipment back into the process area for recycle, to the sump system, directly to the ponds, or into a portable tank. Lixiviant spills would be limited to the Christensen Ranch facility.

2. A spill from chemical storage tanks. Spills of this type from tanks within the plant buildings would normally be collected by the building sumps and pumped to an appropriate receiving tank. External tanks are diked or bermed to contain the specific tank's capacity. Isolation of the leak or rupture would be performed by closing accessible isolation valves or turning off pumping systems to minimize the volume of the spill.

3. Waste pond leakage. The ponds are lined with hypalon or CPE and are installed with underliner inspection tubes. Weekly inspections are performed and documented. Leaks in ponds are reported in accordance with the SOPs.

4. Failure of a well casing. Such failures would usually occur during initial operation of a newly completed well due to improper completion. All wells undergo mechanical integrity testing following completion and are re-tested every five years of operation. Close monitoring of injection pressure and flow during initial operation would allow early detection of a leak. During normal operations, injection well pressures and flows are monitored and recorded at the manifolds located in the module buildings.

5. Transportation accidents. NUREG 0481 discusses the likelihood of a transportation accident involving shipments of yellowcake. Standard Operating Procedure E-11, "Transportation Accidents Involving Radioactive LSA Material" provides the COGEMA emergency action plan for responding to such an accident. E-11 provides instructions for proper packaging, documentation, driver emergency and accident response procedures and cleanup and recovery actions.

6. Failure of concrete foundation and subsequent tank spill. This is an unlikely occurrence but one which did occur at the Irigaray site in 1994. Moisture buildup underneath the building edge foundation weakened the underlying soils which eventually lost their load bearing capacity. A yellowcake thickener tank leg then punctured the concrete and fell over causing the contents to spill inside and outside of the building. In response to that incident the surface drainages around both plant sites, Irigaray and Christensen Ranch, were modified to keep water away from building foundations. More recently, deteriorating concrete building slabs have been replaced or repaired in order to keep spills or wash down water within the plants from seeping underneath the slabs. In the case of Irigaray, most of the uranium recovery circuits and attendant tanks have been removed (leaving only elution, precipitation, and drying). This Irigaray decommissioning activity has removed various potential sources of seepage that could impact the soils underlying the floor and foundation.

5.7.2 EXTERNAL RADIATION EXPOSURE MONITORING PROGRAM

5.7.2.1 Gamma Survey

Program Description

External gamma radiation surveys have been performed routinely on a monthly basis at the Irigaray and Christensen Ranch facilities. Surveys are performed at potential gamma sources such as tanks and filters. During the years of 1987 through 1993, COGEMA maintained an administrative action level of 1.0 mR/hr for gamma surveys. Since the establishment of the new 10 CFR 20, COGEMA has used an administrative action level of 2.0 mR/hr. When the action level is exceeded at any survey location, the survey frequency for areas exceeding the action level is increased to weekly. In any cases of unusual gamma increases, investigations are conducted and records are maintained of each investigation and the corrective action taken. If the results of a gamma survey identify areas where gamma radiation is in excess of levels that delineate a "radiation area", access to the area is restricted and the area is posted as required in 10 CFR §20.1902 (a).

External gamma surveys are performed with survey equipment which meets the following minimum specifications:

1. Range - Lowest range not to exceed 0.1 milliRoentgens per hour (mR/hr) full-scale with the highest range to read at least 5 mR/hr full scale;

2. Battery operated and portable;

Gamma survey instruments are routinely calibrated every twelve months and are operated in accordance with the manufacturer's recommendations. Instrument checks are performed each day that an instrument is used.

Historical Program Results

Table 5.1 summarizes the results of external gamma surveys performed since the time of the last license renewal in 1995. The table provides the annual average values for monthly surveys performed at the Irigaray and Christensen Ranch facilities.

The historical data indicates that the average exposure rates were relatively constant for the period 1995-2004. The period 2005-2007 saw lower gamma exposure rates at both Irigaray and Christensen Ranch due to the lack of process activities and, in the case of Irigaray, the decommissioning of portions of the plant which eliminated significant gamma sources such as the IX cells.

Proposed Gamma Survey Program

COGEMA proposes to continue the same gamma exposure monitoring program at Irigaray

and Christensen Ranch that has been performed to date consisting of the following:

- Gamma exposure rate surveys will be performed in areas which are accessible to personnel and which could potentially exceed the criteria for designation and posting as radiation areas. Based on operating experience, these areas include, but are not necessarily limited to, the filtration equipment, reverse osmosis units, and columns shown in Figures 5.2 and 5.3.Because these areas may vary depending upon operational activities, no permanent gamma monitoring locations have been specified.

- The consistency and extent of the survey data available since 1987 indicates that the frequency of surveys can be continued on a quarterly basis for routine surveys and monthly for areas over the 2.0 mRem/hr administrative limit without a reduction in radiological safety. COGEMA believes that this survey frequency schedule is frequent enough to detect changes in conditions. Additionally, these frequencies are more stringent than the schedule recommended in USNRC Regulatory Guide 8.30, "Health Physics Surveys in Uranium Mills". Changes which could affect gamma exposure radiological conditions would be reviewed by the Safety and Environmental Review Panel (SERP) under the Performance Based License. The SERP would recommend any additional monitoring requirements.

Gamma exposure rate surveys will be performed in accordance with the instructions currently contained in Standard Operating Procedure HP-2, "Gamma Exposure Rate Survey". Gamma survey instruments will be checked each day of use in accordance with the instructions currently contained in Standard Operating Procedure HP-14, "Instrument Performance Checks".

TABLE 5.1
EXTERNAL GAMMA RADIATION SURVEY RESULTS
(Average Annual Exposure Rate)

	Site: Irigaray	Site: Christensen Ranch
Year	mRem/hr	mRem/hr
1995	0.93	1.00
1996	0.88	0.50
1997	0.82	0.51
1998	0.85	0.58
1999	0.74	0.60
2000	0.79	0.50
2001	0.83	0.57
2002	0.78	0.46
2003	0.82	0.46
2004	0.77	0.28
2005	0.39	0.15
2006	0.19	0.19
2007	0.21	0.19
Average	0.69	0.46

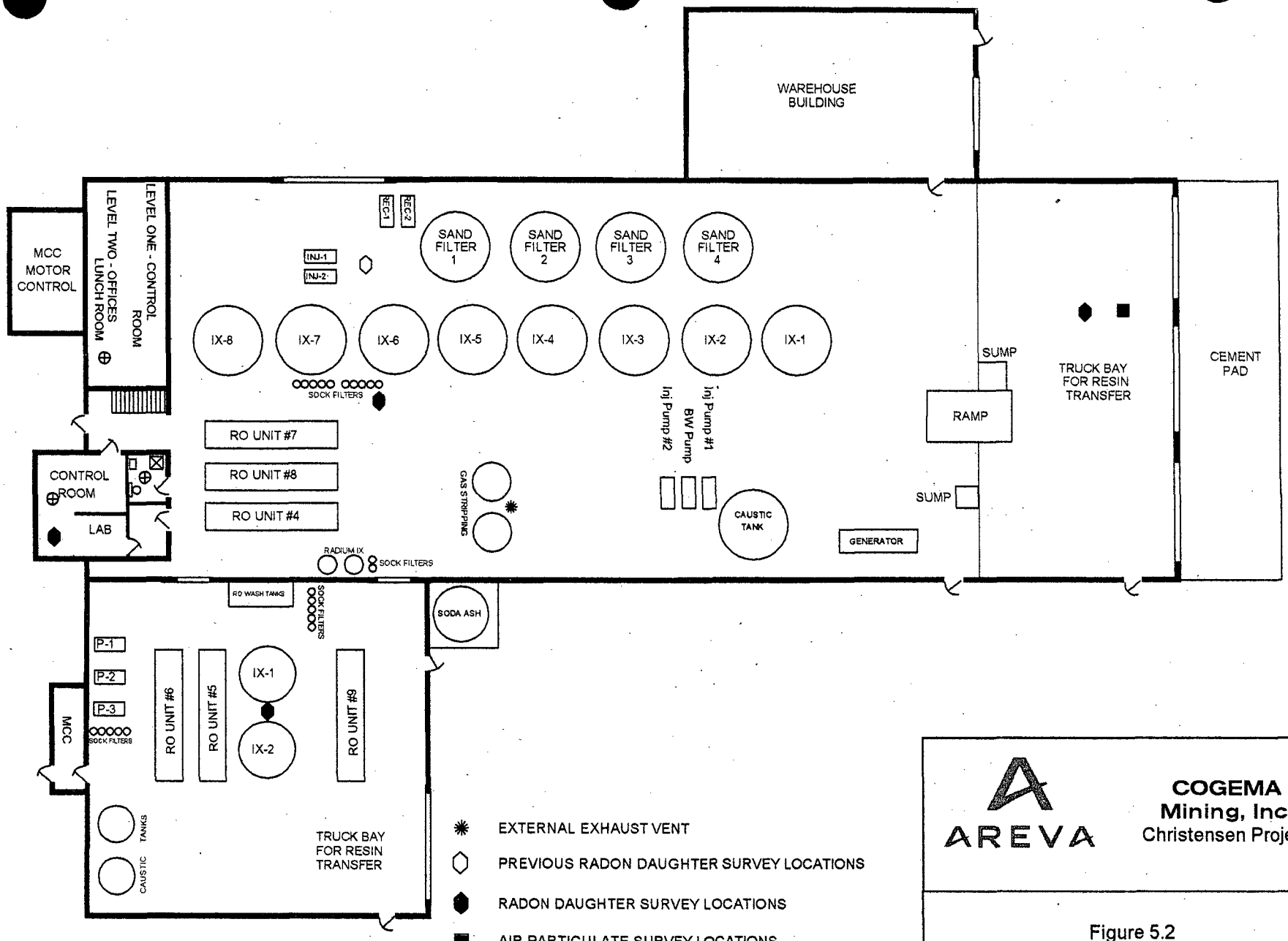
WAREHOUSE BUILDING
MCC MOTOR CONTROL
LEVEL ONE - CONTROL ROOM
LEVEL TWO - OFFICES LUNCH ROOM
REC-1
REC-2
INJ-1
INJ-2
SAND FILTER 1
SAND FILTER 2
SAND FILTER 3
SAND FILTER 4
IX-8
IX-7
IX-6
IX-5
IX-4
IX-3
IX-2
IX-1
SOCK FILTERS
RO UNIT #7
RO UNIT #8
RO UNIT #4
CONTROL ROOM
LAB
GAS STRIPPING
Inj Pump #2
BW Pump
Inj Pump #1
CAUSTIC TANK
GENERATOR
SUMP
RAMP
SUMP
TRUCK BAY FOR RESIN TRANSFER
CEMENT PAD
RADIUM IX
SOCK FILTERS
RO WASH TANKS
SOCK FILTERS
SODA ASH
P-1
P-2
P-3
MCC
SOCK FILTERS
RO UNIT #6
RO UNIT #5
IX-1
IX-2
RO UNIT #9
CAUSTIC TANKS
TRUCK BAY FOR RESIN TRANSFER
EXTERNAL EXHAUST VENT
PREVIOUS RADON DAUGHTER SURVEY LOCATIONS
RADON DAUGHTER SURVEY LOCATIONS
AIR PARTICULATE SURVEY LOCATIONS
ALPHA SWIPE SURVEY LOCATIONS
NOTE: RANDOM RADON DAUGHTER SAMPLES WILL ALSO BE COLLECTED IN THE WELLFIELD MODULE AS INSTRUCTED IN SOP HP-7.
AREVA
COGEMA Mining, Inc.
Christensen Project
Figure 5.2
Satellite Plant Facility
Radiological Monitoring Locations
Geology:
Enviro:
Drafting: RMO
Date: May, 2008
Revision:
State: Wyoming County: Johnson:
Scale:
Drawing ID: FIG CR Rad Monitor Locations

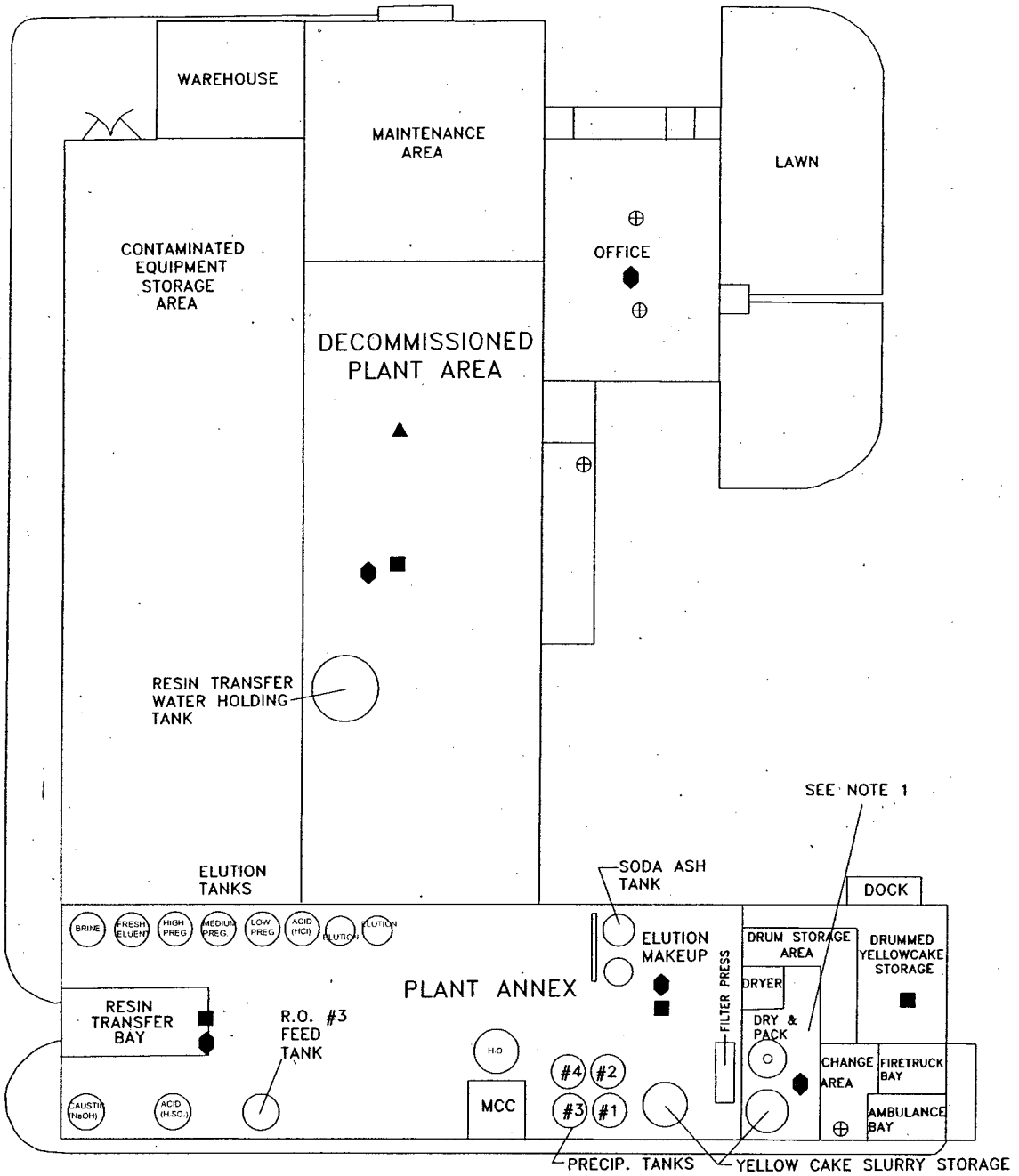

● RADON DAUGHTER SURVEY LOCATIONS

■ AIR PARTICULATE SURVEY LOCATIONS

⊕ ALPHA SWIPE SURVEY LOCATIONS

NOTE 1: DRYER AREA AIR MONITORING LOCATIONS ARE PROVIDED ON FIGURE 5.4.

AREVA

COGEMA Mining, Inc.
Irigaray Project

Figure 5.3
Irigaray Recovery Facility
Radiological Monitoring Locations

Geology: Enviro: Drafting: RMO Date: May 2008 Revision:	State: Wyoming County: Johnson: Scale: Drawing ID: FIG IR Rad Monitor Locations.dwg

5.7.2.2 Personnel Dosimetry

Program Description

Since 1987, all employees who were assigned full-time to the Irigaray and Christensen Ranch facilities were issued Thermoluminescent Dosimeters (TLD) for determination of external gamma exposure. TLDs have been provided by TMA Eberline which is accredited by NVLAP of the US Department of Commerce as required in 10 CFR § 20.1501. The TLDs were exchanged and read on a quarterly basis.

Historical Program Results

Table 5.2 contains a summary of the average and maximum annual exposure for all personnel at the Irigaray and Christensen Ranch facilities since 1995. As can be seen in Table 5.2, the average annual exposures at Irigaray and Christensen Ranch are well below 1% of the regulatory limits. The maximum annual individual exposures are well below 10% of the regulatory limit and indicate that exposures at Irigaray and Christensen Ranch are maintained ALARA.

Proposed Personnel Dosimetry Program

10 CFR §20.1502 (a)(1) requires exposure monitoring for "Adults likely to receive, in 1 year from sources external to the body, a dose in excess of 10 percent of the limits in §20.1201 (a)". Ten percent of the dose limit would correspond to a Deep Dose Equivalent (DDE) of 0.500 rem. Maximum individual annual exposures at the Irigaray and Christensen Ranch facilities since 1987 have been well below 10 percent of the limit. COGEMA believes that it is not likely that any employee will exceed 10 percent of the regulatory limit. Although monitoring of external exposure may not be required in accordance with §20.1201(a), COGEMA proposes to continue to issue TLDs to process employees (including laboratory personnel when in production) and exchange them on a quarterly basis. COGEMA discontinued TLD issuance to employees in other work categories at the time of the last license renewal approval by the NRC.

Results from TLD monitoring will be used to determine individual Deep Dose Equivalent (DDE) for use in determining Total Effective Dose Equivalent (TEDE) in accordance with the instructions currently contained in Standard Operating Procedure HP-5, "Internal and External Occupational Dose Calculations". Process employees will be issued personnel TLDs in accordance with the instructions currently contained in Standard Operating Procedure HP-9, "Personnel TLD Issue".

TABLE 5.2
EXTERNAL RADIATION EXPOSURE MONITORING RESULTS
(mRem/yr from Quarterly TLD Badges)

	Site: Irigaray		Site: Christensen Ranch	
Year	Average Annual Exposure (mRem/yr)	Max. Individual Annual Exposure (mRem/yr)	Average Annual Exposure (mRem/yr)	Max. Individual Annual Exposure (mRem/yr)
1995	39.3	216	10.5	11
1996	22.9	43	25	34
1997	26.4	64	11	11
1998	24.6	39	0	0
1999	60	102	0	0
2000	28	29	0	0
2001	43.1	85	27	84
2002	23	73	20.1	72
2003	4.7	14	4.5	7
2004	4.2	9	5	5
2005	9	22	1.5	5
2006	3.5	14	0	0
2007	4.8	12	2.5	5
$Average_1$	33.4	81.4	11.7	26.5
$Average_2$	5.2	14.2	2.7	4.4
Avg. Overall	22.6	55.5	8.2	18.0

$Average_1$ is the annual average for years 1995-2002.
$Average_2$ is the annual average for years 2003-2007.
Avg. Overall is the annual average for years 1995-2007.

5.7.3 IN-PLANT AIRBORNE RADIATION MONITORING PROGRAM

5.7.3.1 In-Plant Airborne Uranium Particulate Monitoring

Program Description

Monitoring for airborne uranium is performed routinely at Irigaray and Christensen Ranch through the use of area sampling and breathing zone sampling. The monitoring programs are described below.

Area Sampling

Area samples are collected monthly at the specified sample locations. Samples are collected using a glass fiber filter and a regulated air sampler such as an Eberline RAS-1 or equivalent. Sample volume is adequate to achieve the lower limits of detection (LLD) for uranium in air. Samplers are calibrated every six months using a digital mass flowmeter.

Measurement of airborne uranium is performed by gross alpha counting of the air filters using an alpha scaler such as a Ludlum Model 2000 or equivalent. Generally, the Derived Air Concentration (DAC) for soluble (D classification) natural uranium of 5 E-10 µCi/ml from appendix B to 10 CFR 20 is applied to the gross alpha counting results. This is a conservative method because the gross alpha results include Uranium-238 and several of its daughters (notably Ra-226 and Th-230) which are alpha emitters. An action level of 25% of the DAC for soluble natural uranium is established at the Irigaray and Christensen Ranch facilities. If an airborne uranium sample exceeds 25% of the DAC, an investigation is performed and sampling frequency is increased to weekly. The investigation and any corrective action taken are documented. Sample locations for the Christensen Ranch facility are shown on Figure 5.2; the Irigaray general plant sample locations are shown on Figure 5.3.

Continuous sampling in the dry-pack area is performed when the dryer is in operation. The air filters are collected weekly, as a minimum, for analysis. Sample locations for the dry-pack area are illustrated on Figure 5.4. Results are used to determine employee time weighted exposures (TWE). In the case of the dryer area air samples, a calculated DAC of 4.7E-10 uCi/ml Unat is utilized in personnel exposure calculation. The calculated DAC reflects the actual solubility of the dried yellowcake product. The product is composed of 85% Class D Unat and 15% Class W Unat. The evaluation process for the derivation of the calculated dried yellowcake DAC is discussed in Section 5.7.3.1 (pages 5-29 to 5-33) of the January 5, 1996 SUA-1341 license renewal application.

Breathing Zone Sampling

Breathing zone sampling is performed to determine individual exposure to airborne uranium during certain operations. Sampling is performed with an MSA pump or equivalent. The air filters are counted and compared to the DAC using the same method described for area sampling. Air samplers are calibrated at least every six months.

Historical Program Results

Table 5.3 provides the results of monitoring for airborne uranium from the period of 1995 through 2007. Average and maximum airborne gross alpha activity for this period shows concentrations of uranium which were very low percentages of the DAC. The data demonstrate that engineering controls were effective. The modest increase in airborne uranium in the last few years likely relates to various decommissioning activities being conducted at the time.

Proposed In-Plant Airborne Uranium Monitoring Program

COGEMA proposes to continue the same airborne uranium monitoring program at Irigaray and Christensen Ranch that has been performed to date.

Airborne sampling will be performed on a monthly basis in accordance with the instructions currently contained in Standard Operating Procedures HP-6, "Airborne Uranium Survey", HP-18, "Use of Breathing Zone Air Samplers" and HP-26, "Airborne Uranium Sampling/Exposure In The Dry-Pack Area." These Standard Operating Procedures implement the guidance contained in USNRC Regulatory Guide 8.25, "Air Sampling in the Workplace." HP-26 requires continuous sampling when the dryer is in operation. Sample frequency will return to monthly grab samples if the dryer is not in operation and final samples taken outside the furnace/drum loading rooms are less than 10% of the DAC for natural uranium.

Sampler calibration will be performed in accordance with the instructions currently contained in Standard Operating Procedure HP-13, "Calibration of Air Sampling Units With 47 mm Sample Filter Heads" and HP-15, "Calibration of Breathing Zone Air Sampling Pumps".

TABLE 5.3
INPLANT AIRBORNE URANIUM MONITORING SUMMARY

	Site: Irigaray				Site: Christensen Ranch			
	Average Airborne U Activity		Maximum Airborne U Activity		Average Airborne U Activity		Maximum Airborne U Activity	
Year	(μCi/ml)·E-12 gross α	%DAC[1]	(μCi/ml)·E-12 gross α	%DAC[1]	(μCi/ml)·E-12 gross α	%DAC[1]	(μCi/ml)·E-12 gross α	%DAC[1]
1995	0.42	0.08	2.60	0.52	0.62	0.12	3.40	0.68
1996	0.92	0.18	4.90	0.98	0.59	0.12	2.00	0.40
1997	0.91	0.18	4.00	0.80	0.77	0.15	1.30	0.26
1998	0.70	0.14	7.30	1.46	0.64	0.13	2.00	0.40
1999	1.10	0.22	5.40	1.08	0.53	0.11	1.40	0.28
2000	1.80	0.36	6.00	1.20	0.79	0.16	1.70	0.34
2001	1.10	0.22	3.60	0.72	1.00	0.20	2.30	0.46
2002	1.10	0.22	5.20	1.04	1.20	0.24	2.20	0.44
2003	1.40	0.28	3.50	0.70	0.82	0.16	2.90	0.58
2004	2.60	0.52	4.90	0.98	0.64	0.13	1.40	0.28
2005	2.30	0.46	6.70	1.34	1.40	0.28	3.60	0.72
2006	3.20	0.64	7.50	1.50	1.70	0.34	2.20	0.44
2007	2.60	0.52	10.20	2.04	4.30	0.86	16.00	3.20
Average	1.55	0.31	5.52	1.10	0.77	0.15	2.04	0.41

[1] DAC = 5E-10 μci/ml

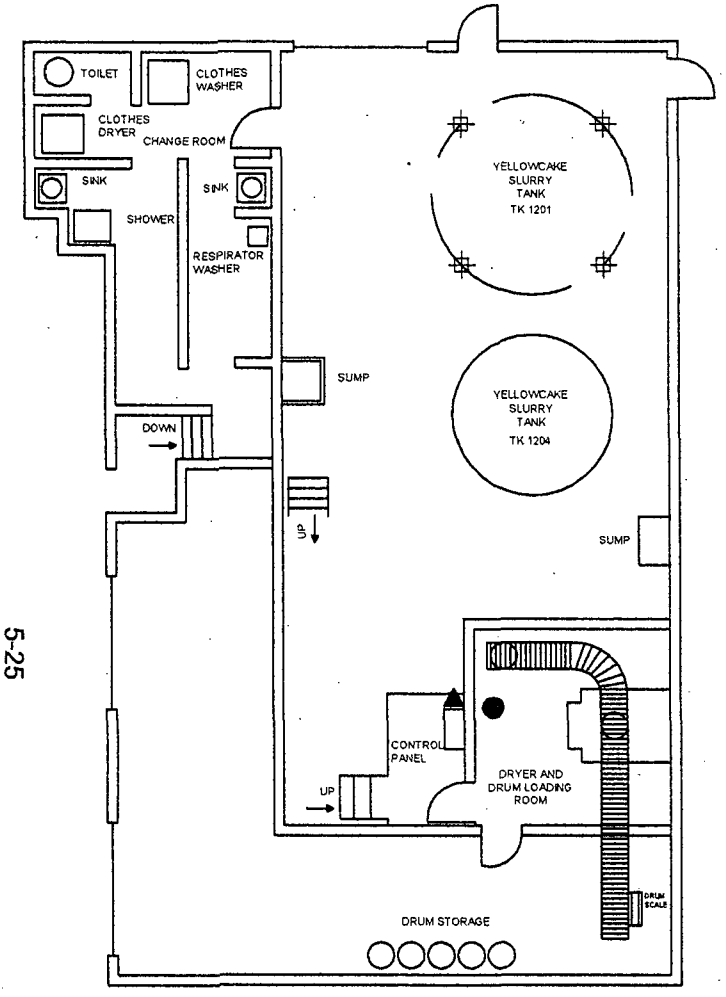

BOTTOM LEVEL

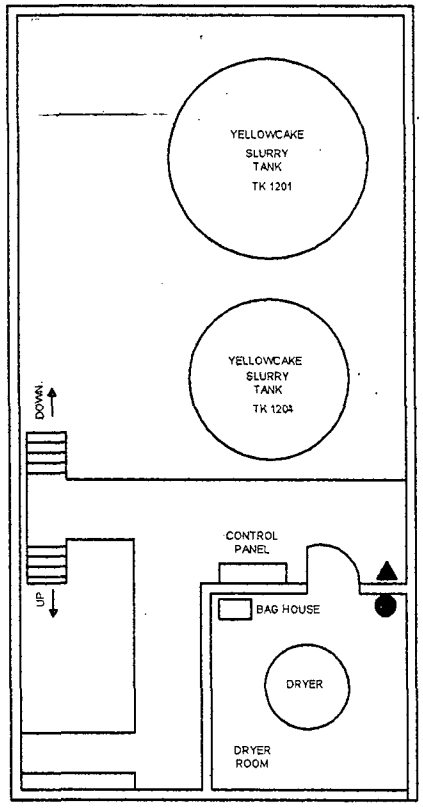

MID LEVEL

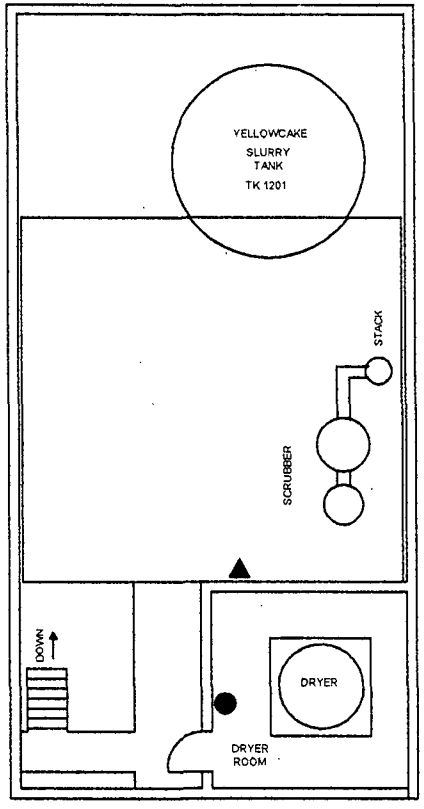

TOP LEVEL

AIR SAMPLE LOCATIONS

OUTSIDE DRYER AND DRUM LOADING ROOM ▲

INSIDE DRYER AND DRUM LOADING ROOM ●

AREVA

COGEMA Mining, Inc.
Christensen Project

Figure 5.4
Irigaray Project
Dry-Pack Level
Air Sample Locations

Geology: Enviro: Drafting: RMO Date: May, 2008 Revision:	State: Wyoming County: Johnson: Scale: Drawing ID: FIG IR Drypack Sample Locations.dwg

5.7.3.2 In-Plant Radon Daughter Surveys

Program Description

Since 1987, Radon daughter surveys have been conducted in the operating areas of the Irigaray and Christensen Ranch (since 1989) facilities on a monthly basis at the specified locations. Samples are collected with a low volume air pump and then analyzed with an alpha scaler using the Modified Kusnetz method described in ANSI-N13.8-1973. Air samplers are calibrated at least every six months.

Results of radon daughter sampling are expressed in Working Levels (WL) where one WL is defined as any combination of short-lived Rn-222 daughters in one liter of air, without regard to equilibrium, that emit 1.3 E5 MeV of alpha energy. The DAC limit from Appendix B to 10 CFR 20 for Rn-222 with daughters present is 0.33 WL. COGEMA has established an action level of 25% of the DAC or 0.08 WL. Radon daughter results in excess of the action level resulted in an investigation of the cause and an increase in the sampling frequency to weekly until the radon daughter levels do not exceed the action level.

Historical Program Results

Table 5.4 provides the results of monitoring for radon daughters from the period of 1995 through 2007. The annual average and maximum values are presented. The data show that the average radon daughter activity concentration at Irigaray and Christensen Ranch was generally less than 5% of the regulatory limit.

Proposed In-Plant Radon Daughter Monitoring Program

COGEMA proposes to continue the same radon daughter monitoring program at Irigaray and Christensen Ranch that has been performed to date, utilizing the locations shown in Figure 5.2 and Figure 5.3.

Routine radon daughter monitoring will be performed on a monthly basis in accordance with the instructions currently contained in Standard Operating Procedure HP-7, "Radon Daughter Survey." Air sampler calibration will be performed in accordance with the instructions currently contained in Standard Operating Procedure HP-15, "Calibration of Breathing Zone Air Sampling Pumps."

TABLE 5.4
INPLANT RADON DAUGHTER MONITORING SUMMARY

	Site: Irigaray				Site: Christensen Ranch			
	Average Radon Daughters		Maximum Radon Daughters		Average Radon Daughters		Maximum Radon Daughters	
Year	WL	%DAC[1]	WL	%DAC[1]	WL	%DAC[1]	WL	%DAC[1]
1995	0.006	1.8	0.025	7.6	0.007	2.1	0.140	42.4
1996	0.010	3.0	0.017	5.2	0.012	3.6	0.248	75.2
1997	0.010	3.0	0.079	23.9	0.007	2.1	0.033	10.0
1998	0.010	3.0	0.081	24.5	0.021	6.4	0.785	237.9
1999	0.013	3.9	0.098	29.7	0.007	2.1	0.180	54.5
2000	0.011	3.3	0.048	14.5	0.010	3.0	0.085	25.8
2001	0.010	3.0	0.044	13.3	0.009	2.7	0.326	98.8
2002	0.022	6.7	0.032	9.7	0.014	4.2	0.093	28.2
2003	0.014	4.2	0.065	19.7	0.008	2.4	0.070	21.2
2004	0.025	7.6	0.100	30.3	0.005	1.5	0.030	9.1
2005	0.009	2.7	0.030	9.1	0.006	1.8	0.030	9.1
2006	0.016	4.8	0.030	9.1	0.007	2.1	0.040	12.1
2007	0.009	2.7	0.030	9.1	0.007	2.1	0.100	30.3
Average	0.013	3.8	0.052	15.8	0.011	3.3	0.236	71.6

[1] DAC = 0.33 WL

5.7.4 EXPOSURE CALCULATIONS

Since January 1, 1994 COGEMA has determined internal exposures based upon the requirements of 10 CFR § 20.1204. Following is a discussion of the exposure calculation methods and results.

5.7.4.1 Natural Uranium Exposure

Internal exposure to airborne uranium is calculated using the DAC-hours formula:

$$I_u = \sum_{i=1}^{n} \frac{Xi * ti}{DAC * PF}$$

where:

I_u	=	uranium intake, DAC-hours
t_i	=	time that the worker is exposed to concentrations X_i (hr)
X_i	=	average concentration of uranium in the air near the worker's breathing zone, µCi/ml
DAC	=	the concentration value for the radioactive material from appendix B of Part 10 CFR 20, µCi/ml
PF	=	the respirator protection factor, if applicable
n	=	the number of exposure periods during the week or quarter

The DAC-hours for uranium are calculated on Time Weighted Exposure (TWE) forms and/or RWP Air Sample - Intake Calculation forms. The DAC-hours are totaled and entered onto each employee's Occupational Exposure Record. The regulatory limits are 2,000 DAC-hours per year.

The data required to calculate internal exposure to airborne natural uranium are determined as follows:

Time of Exposure Determination

A semi-annual time study is conducted at the Irigaray and Christensen Ranch facilities to

determine worker occupied locations and occupancy times. The time studies are documented and are used for the calculation of employee exposures, when actual recorded times are not available.

Airborne Uranium Activity Determination

Airborne uranium activity is determined from surveys performed as described in Section 5.7.3.1.

In addition to DAC-hour calculations, a calculation is performed to determine the intake of soluble uranium in milligrams (mg) using the following formula:

$$\text{uranium (mg)} = \frac{X_i * t_i * 1.77\ E9}{PF}$$

where:

X_i	=	average concentration of uranium in the air near the worker's breathing zone, µCi/ml
t_i	=	time that the worker is exposed to concentrations X_i (hr)
1.77 E9	=	factor equaling the breathing rate (1.2 E6 ml/hr) divided by the specific activity of natural uranium (6.77 E-4 µCi/mg)
PF	=	the respirator protection factor, if applicable

The intake limit is 10 milligrams soluble uranium per week which is more restrictive than the DAC-hours limit due to the chemical toxicity of uranium.

Historical Program Results

Table 5.5 summarizes maximum internal exposure results at Irigaray and Christensen Ranch from airborne uranium. The data shows that internal exposure at Irigaray and Christensen Ranch has been maintained ALARA. The maximum individual internal exposure to airborne uranium during the period from 1995 through 2007 was 1% of the allowable regulatory limit.

TABLE 5.5
ANNUAL AIRBORNE URANIUM EXPOSURE SUMMARY

Airborne Uranium Exposure Monitoring Period	Maximum Airborne Uranium Exposure (DAC-Hours)
1995	20.50
1996	5.33
1997	4.15
1998	3.83
1999	0.54
2000	0.68
2001	0.69
2002	0.48
2003	0.24
2004	0.25
2005	1.25
2006	1.90
2007	5.80
Average	3.51

Proposed Airborne Uranium Exposure Monitoring Program

COGEMA proposes to continue the same internal airborne uranium exposure calculation methods at Irigaray and Christensen Ranch that have been used to date and which are currently contained in Standard Operating Procedure HP-5, "Internal and External Occupational Dose Calculations". Exposures to airborne uranium will be compared to the DAC for the natural uranium solubility classification (D, or 85%D/15%W) that is appropriate for the material (see Table 5.6).

TABLE 5.6
PROPOSED URANIUM SOLUBILITY CLASSIFICATIONS
AND CORRESPONDING DAC, ALI AND AIRBORNE EFFLUENT CONCENTRATIONS
FOR COGEMA YELLOWCAKE PRODUCT

PROCESS PLANT AREA	URANIUM-NATURAL SOLUBILITY CLASSIFICATION	OCCUPATIONAL INHALATION VALUES		EFFLUENT CONCENTRATIONS
		ALI (µCi)	DAC (µCi/ml)	Air (µCi/ml)
All processes prior to the dryer	Class D	1E+0	5E-10	NA
Drum Packaging Room, Furnace Areas, Control Room	85% Class D 15% Class W	1E+0	4.7E-10	NA
Stack Discharge - Environmental Air Monitoring Stations	50% Class D 50% Class W	NA	NA	1.9E-12

5.7.4.2 Radon Daughter Exposure

Internal exposure to radon daughters is calculated using the DAC-hours formula:

$$I_r = \sum_{i=1}^{n} \frac{Wi * ti}{DAC * PF}$$

where:

I_r	=	radon daughters intake, DAC-hours
t_i	=	time that the worker is exposed to concentrations W_i (hr)
W_i	=	average number of working levels in the air near the worker's breathing zone during the time (t_i)
DAC	=	the concentration value for the radon daughters from Appendix B of Part 20, (0.33 working levels)
PF	=	the respirator protection factor, if applicable

The data required to calculate exposure to radon daughters are determined as follows:

Time of Exposure Determination

A semi-annual time study is conducted at the Irigaray and Christensen Ranch facilities to determine worker occupied locations and occupancy times. The time studies are documented and are used for the calculation of employee exposures, when actual recorded times are not available.

Radon Daughter Concentration Determination

Radon-222 daughter concentrations are determined from surveys performed as described in Section 5.7.3.2. The DAC-hours for radon daughters are calculated on Time Weighted Exposure (TWE) forms and/or RWP Air Sample - Intake Calculation forms. The DAC-hours are totaled and entered onto each employee's Occupational Exposure Record.

Historical Program Results

Table 5.7 summarizes the results of time weighted radon daughter exposure results at Irigaray and Christensen Ranch since 1995. The data show that internal exposure due to radon daughters at Irigaray and Christensen Ranch has been maintained ALARA. The maximum individual internal exposure to radon daughters during the period from 1995

through 2007 was 48 DAC-hours, or 2.4% of the annual limit.

Proposed Radon Daughter Exposure Monitoring Program

COGEMA proposes to continue internal radon daughter exposure calculation methods at Irigaray and Christensen Ranch that have been used to date, currently contained in Standard Operating Procedure HP-5, "Internal and External Occupational Dose Calculations". Exposures to radon daughters will be compared to the DAC for radon daughters from appendix B of 10 CFR 20 (0.33 WL).

TABLE 5.7
ANNUAL RADON DAUGHTER EXPOSURE RESULTS

Radon Daughter Exposure Monitoring Period	Maximum Individual Exposure (DAC-Hours)
1995	8.48
1996	47.83
1997	6.75
1998	37.53
1999	34.17
2000	7.38
2001	5.28
2002	7.64
2003	0.00
2004	0.00
2005	0.01
2006	0.00
2007	0.04
Average	11.93

5.7.4.3 Total Effective Dose Equivalent

Table 5.8 contains the Total Effective Dose Equivalent (TEDE) results for 1995 through 2007 for Irigaray and Christensen Ranch. 1999 was the last full year of production. As can be seen from the data the average dose was generally less than 2% of the regulatory limit of 5 Rem.

5.7.4.4 Respiratory Protection Program

Respiratory protective equipment has been supplied by COGEMA for activities where engineering controls may not be adequate to maintain acceptable levels of airborne radioactive materials or toxic materials. Use of respiratory equipment at Irigaray and Christensen Ranch has been in accordance with the procedures currently set forth in the following Standard Operating Procedures:

Standard Operating Procedure HP-21, "Respiratory Protection Program"
Standard Operating Procedure HP-22, "Respirator Maintenance".

The respirator program was designed to implement the guidance contained in USNRC Regulatory Guide 8.15, "Acceptable Programs For Respiratory Protection". The respirator program is administered by the Radiation Safety Officer (RSO).

5.7.5 BIOASSAY PROGRAM

Program Description

COGEMA has implemented a urinalysis bioassay program at the Irigaray and Christensen Ranch facilities that meets the guidelines contained in USNRC Regulatory Guide 8.22, "Bioassay at Uranium Mills." The primary purpose of the program is to detect uranium intake in employees who were regularly exposed to uranium. The bioassay program consists of the following elements:

1. Prior to assignment to either facility, all new employees are required to submit a baseline urinalysis sample.

2. During operations, urine samples are collected from process area workers on a monthly frequency and analyzed by an outside analytical laboratory for uranium content. Blank and spiked samples are also submitted to the laboratory with monthly employee samples as part of the Quality Assurance program. The measurement sensitivity for the analytical laboratory is 5 µg/l.

3. Action levels for urinalysis are established based upon Table 1 in USNRC Regulatory Guide 8.22, "Bioassay at Uranium Mills."

TABLE 5.8
ANNUAL TOTAL EFFECTIVE DOSE EQUIVALENT SUMMARY

Exposure Monitoring Period	Max. # of Employees	Average Exposure (rems)	Maximum Exposure (rems)
1995	50	0.11	0.83
1996	65	0.13	0.43
1997	53	0.26	0.28
1998	45	0.05	0.17
1999	40	0.14	0.18
2000	31	0.04	0.13
2001	36	0.04	0.12
2002	20	0.03	0.063
2003	22	0.007	0.03
2004	24	0.007	0.02
2005	15	0.01	0.02
2006	12	0.008	0.02
2007	12	0.008	0.02

Historical Program Results

Following is a summary of the results of the bioassay program since 1995.

1995

An average of 22 employees were monitored monthly. There were eight instances during the year when employees' samples exceeded 15 ug/l U. On one occasion the follow up sample still exceeded 15 ug/l U. With one possible exception all of the individuals who exceeded the action level were either operators on the yellowcake drypack or filter press, or were involved in maintenance in those areas prior to sample collection. In one instance sample contamination was suspected. The number of samples exceeding the action level prompted a switch to a disposable respirator hood when working in heavily contaminated environments.

1996

An average of 25 employees were monitored monthly. There were three samples exceeding 15 ug/l U. Two of these were from employees conducting maintenance work in the yellowcake dryer/packaging area. The third was attributed to contamination of the sample container.

1997

An average of 23 employees were monitored monthly. There were three samples exceeding 15 ug/l U: two were related to yellowcake dryer/packaging maintenance, the third was due to sample container contamination.

1998

An average of 17 employees were monitored monthly. Two samples exceeded 15 ug/l U. Both were from operators in the yellowcake dryer/packaging area; in one case a drum lid blew off of a drum in the drum room; there was excessive pressure buildup in the drum from oxygen generation due to the use of hydrogen peroxide in precipitation. The individual had yellowcake blown under his respirator and into his face. The initial urine sample after the event measured 846 ug/l U. Levels of U dropped off dramatically in follow up samples. No levels of albumin above normal were detected in any of the urine samples. The incident was fully documented to the NRC in a submittal by COGEMA dated May 15, 1998. As a result of the incident, the SOP was modified to instruct the operator to leave the lid off of the filled barrel for approximately four hours before sealing it in place. This allows the residually generated oxygen to fully vent before the lid is installed.

1999

An average of 20 employees were monitored monthly. There were no samples that exceeded 15 ug/l U.

2000

An average of 20 employees were monitored monthly. Two samples exceeded 15 ug/l U; both were attributed to sample bottle contamination.

2001-2007

An annual average of 11 employees were monitored monthly. Over that seven year span only two samples exceeded 15 ug/l U. On one occasion the worker had been washing down a yellowcake slurry trailer delivering material from COGEMA's Texas operation. In the other case the elevated reading was traced to sample bottle contamination.

Bioassay Quality Assurance Program Description and Historical Results

Elements of the Quality Assurance requirements for the Bioassay Program are based upon the guidelines contained in USNRC Regulatory Guide 8.22, "Bioassay in Uranium Mills". These elements include the following:

1. Each batch of samples submitted to the analytical laboratory is accompanied by two blind control samples. The control samples are from persons that had not been occupationally exposed and are spiked to a uranium concentration of 10 to 20 µg/l and 40 to 60 µg/l. The results of analysis for these samples are required to be within ± 30% of the spiked value. COGEMA has tracked the results of the blind spike analysis since 1987. All analytical results have fallen within the acceptable range.

2. The analytical laboratory spikes 10 to 30% of all samples received with known concentrations of uranium and the recovery fraction determined. Results are reported to COGEMA. All results have been within ± 30%.

Proposed Bioassay Program

COGEMA proposes to continue to implement the Bioassay Program described in this section in accordance with the guidance contained in USNRC Regulatory Guide 8.22, "Bioassay in Uranium Mills" and with the instructions currently contained in Standard Operating Procedure HP-4, "Bioassay Program".

5.7.6 CONTAMINATION CONTROL PROGRAM

COGEMA's contamination control program at Irigaray and Christensen Ranch consists of the following elements:

Surveys For Surface Contamination

COGEMA performs surveys for surface contamination in operating and clean areas of the Irigaray and Christensen Ranch facilities in accordance with the guidelines contained in USNRC Regulatory Guide 8.30, "Health Physics Surveys in Uranium Mills". Surveys for

removable alpha contamination in clean areas such as lunch rooms, change rooms and offices are conducted weekly.

Surveys For Contamination of Skin and Personal Clothing

Condition 10.11 of License SUA-1341 requires that all employees who do not shower prior to leaving the restricted area monitor themselves with an alpha survey instrument. All personnel leaving the restricted area are required to perform and document alpha contamination monitoring. In addition, personnel who could come in contact with potentially contaminated solutions outside a restricted area such as in the wellfields are required to monitor themselves prior to leaving that worksite. All personnel receive training in the performance of surveys for skin and personal contamination. Personnel are also allowed to conduct contamination monitoring of small, hand-carried items as long as all surfaces could be reached with the instrument probe and the item did not originate in yellowcake areas. All other items are surveyed as described in the next section.

As recommended in USNRC Regulatory Guide 8.30, "Health Physics Surveys in Uranium Mills", COGEMA conducts quarterly unannounced spot checks of personnel to verify the effectiveness of the surveys for personnel contamination. A minimum of 25% of the employees assigned to the mine site are surveyed, concentrating on plant operators and maintenance personnel. The purpose of the surveys is to ensure that employees were adequately surveying and decontaminating themselves prior to exiting the restricted areas.

Surveys of Equipment Prior to Release to an Unrestricted Area

Surveys of all items from the restricted areas with the exception of small. hand-carried items described above are performed by the RSO, radiation safety technician, or properly trained employees. The release limits are set by "Guidelines for Decontamination of Facilities and Equipment Prior to Release for Unrestricted Use or Termination of Licenses For Byproduct or Source Materials", NRC, September 1984. Surveys are performed with the following equipment:

1. Portable alpha count rate meter, Ludlum Model 3 or equivalent.

2. Portable GM survey meter with a beta/gamma probe with an end window thickness of not more than 7 mg/cm^2, Eberline Model E-120 with HP-190 probe or equivalent.

3. Swipes for removable contamination surveys as required.

Historical Program Results

Table 5.9 contains the results of the surface contamination monitoring program at the Irigaray and Christensen Ranch facilities since 1995. The table contains the average and maximum results from the weekly surveys. Table 5.9 and the quarterly spot checks of personnel

performed during the period (not summarized here) show that the program is effective.

Proposed Contamination Control Program

COGEMA proposes to implement the same Contamination Control program which is currently in use. The program has proven to be effective at controlling contamination of personnel and clean areas. The program will be implemented in accordance with the instructions currently contained in the following Standard Operating Procedures:

- Survey instruments will be calibrated and checked in accordance with the instructions contained in Standard Operating Procedure HP-14, "Instrument Performance Checks".

- Surveys for removable contamination will be performed in accordance with the instructions contained in Standard Operating Procedure HP-3, "Removable Alpha Surveys - Swipes".

- Surveys for alpha and beta/gamma contamination of items prior to release from restricted areas will be performed in accordance with the instructions contained in Standard Operating Procedure HP-10, "Equipment or Material Release to Unrestricted Areas".

- Surveys for removable alpha contamination will be performed in accordance with the instructions contained in Standard Operating Procedure HP-3, "Removable Alpha Surveys".

- Personnel monitoring will be performed in accordance with the instructions contained in Standard Operating Procedure HP-1, "Alpha Contamination Monitoring for Release From a Restricted Area."

5.7.7 MONITORING PROGRAM SUMMARY

Section 5.7 of this renewal application has reviewed the radiological monitoring data produced at Irigaray and Christensen Ranch for the years of 1995 through 2007. Each section discussed the historical results of the data with an emphasis on regulatory compliance and trend analysis to determine whether COGEMA's ALARA goals are being met. The existing program has met the ALARA goals, and COGEMA proposes the continuation of the existing radiation safety monitoring program. Table 5.10 provides a tabular summary of the current program as well as the regulatory guidance provided in USNRC Regulatory Guide 8.30, "Health Physics Surveys In Uranium Mills".

TABLE 5.9
SURFACE CONTAMINATION SURVEY SUMMARY
(Average annual & maximum annual removable alpha levels)

	Site: Irigaray		Site: Christensen Ranch	
	Annual Average	Annual Maximum	Annual Average	Annual Maximum
Year	(α dpm/100cm^2)	(α dpm/100cm^2)	(α dpm/100cm^2)	(α dpm/100cm^2)
1995	14	841	21	21
1996	16	301	7	46
1997	13	155	6	27
1998	11	93	6	20
1999	11	64	4	19
2000	12	49	6	43
2001	10	52	6	41
2002	8	33	5	16
2003	9	70	3	10
2004	10	33	5	20
2005	10	48	5	20
2006	13	48	4	14
2007	11	51	7	24
Average	11	141	7	25

Note: Regulatory limit is 1000 α dpm/100 cm^2 for removable contamination as specified in USNRC Regulatory Guide 8.30.

TABLE 5.10
IRIGARAY\CHRISTENSEN RANCH RADIOLOGICAL MONITORING PROGRAM SUMMARY

Type of Survey	Type of Area	Proposed Frequency	Reg. Guide 8.30 Recommended Frequency
Airborne Uranium	·Airborne radioactivity areas ·Other indoor process areas ·Special maintenance involving high airborne concentrations of yellowcake	·Weekly grab samples[1] ·Monthly grab samples ·Extra breathing zone grab samples	·Weekly grab samples ·Monthly grab samples ·Extra breathing zone grab samples
Radon daughters	·Areas that exceed 0.08WL ·Areas that exceed 0.03WL ·Areas below 0.03WL	·Weekly radon daughter grab samples ·Monthly radon daughter grab samples ·Monthly radon daughter grab samples	·Weekly radon daughter grab samples ·Monthly radon daughter grab samples ·Quarterly radon daughter grab samples
External radiation: Gamma	·Throughout mill ·Radiation areas	·Quarterly ·Monthly[2]	·Semiannually ·Quarterly
External radiation: Beta	·Where workers are in close contact with yellowcake	·Annually	·Survey by operation done once plus whenever procedures change
Surface contamination	·Yellowcake areas ·Eating rooms, change rooms, control rooms, office	·Daily walkthrough ·Weekly	·Daily ·Weekly
Skin and personal clothing	·Yellowcake workers who shower ·Yellowcake workers who do not shower	·Each exit from controlled area[3] ·Each exit from controlled area[3]	·Quarterly ·Each day before leaving
Equipment to be released	·Equipment to be released that maybe contaminated	·Detailed survey before release	·Once before release
Packages containing yellowcake	·Packages	·Detailed survey before release	·Spot check before release
Ventilation	·All areas with airborne radioactivity	·Daily walkthrough	·Daily
Respirators	·Respirator face pieces and hoods	·Before reuse	·Before reuse

Notes:
1 Increased sampling frequency based upon administrative action level of 25% of the MPC or DAC; Continuous sampling is performed in the dry-pack area during dryer operation
2 Increased gamma survey frequency performed at administrative action level of2.0 mR\hr
3 All employees required to survey upon exit; Quarterly spot checks of >25% process staff also conducted

5.8 ENVIRONMENTAL MONITORING PROGRAMS

5.8.1 AIRBORNE EFFLUENT AND ENVIRONMENTAL MONITORING PROGRAMS

Program Description and Historical Monitoring Results

The airborne effluent and environmental monitoring programs were designed to monitor the release of airborne radioactive effluents from the Irigaray and Christensen Ranch facilities. To evaluate the effectiveness of the effluent control systems, the results of the monitoring program were compared with the background levels and with regulatory limits.

Restricted Areas

COGEMA has established restricted areas to control radioactive materials. At the Christensen Ranch facility, the plant building, ponds, and the wellfield module (header) buildings are designated as restricted areas with appropriate signs in accordance with 10 CFR 20.1902(e) and with the words "ANY MATERIALS WITHIN THIS FACILITY MAY CONTAIN RADIOACTIVE MATERIAL." At Irigaray the designated restricted areas consist of the process portion of the plant building, approximately two thirds of the fenced storage area adjacent to the plant building, and the ponds. Signs are posted for these areas as described above. Temporary restricted areas may be established as required for areas at both sites which contain radioactive material.

Radon

The radon gas effluent released to the environment was monitored at five locations at the Irigaray facility (IR-1, IR-3, IR-4, IR-5 and IR-6) and at four locations at the Christensen Ranch facility (AS-1, AS-5a, AS-5b and AS-6) when production was ongoing. Monitoring was performed using Track-Etch radon cups provided by Landauer Corporation. The cups were exchanged on a quarterly basis. Standard Operating Procedure ENV-7, "Environmental Radon Detection" currently provides the instructions for radon gas monitoring. In addition to the manufacturer's Quality Assurance program, COGEMA exposed one duplicate radon Track Etch cup per quarter. Table 5.11 contains the results of radon monitoring for the Irigaray facility since 1995. Table 5.12 contains similar data for the Christensen Ranch facility. Note that environmental monitoring was suspended in part after 2001 since the project had entered restoration/decommissioning. Table 5.13 presents annual calculated radon release estimates for both sites for the period 1995 – 2000, the last production run prior to entering exclusively into restoration. Table 5.13 summarizes the information presented in the semiannual effluent reports over that time period. Calculation of the semiannual radon release was suspended after year 2000.

TABLE 5.11
IRIGARAY ENVIRONMENTAL RADON GAS MONITORING SUMMARY

Monitoring Period		Radon Level in pCi/l					
		Monitoring Site[1]					
Year	Qtr.	IR-1	IR-3	IR-4	IR-5	IR-6	IR-13
1995	1	0.6	1.0	0.9	0.7	0.8	ND
	2	2.2	1.1	1.4	0.9	1.0	1.5
	3	1.4	2.2	1.3	1.2	1.7	1.3
	4	2.3	3.1	1.4	1.8	1.5	1.2
1996	1	1.0	0.9	0.5	0.7	1.1	0.8
	2	1.0	1.3	1.2	0.8	0.9	1.2
	3	1.7	1.7	1.4	2.0	1.8	4.1
	4	4.0	3.6	3.6	ND	ND	ND
1997	1	0.6	0.9	0.6	0.7	0.7	0.8
	2	0.9	1.4	1.0	0.7	0.6	1.4
	3	0.8	0.9	0.9	0.7	2.3	1.3
	4	1.2	1.5	1.4	1.2	1.5	1.4
1998	1	0.9	0.9	0.8	0.4	0.7	0.8
	2	0.5	0.8	0.9	0.3	0.3	0.7
	3	0.5	1.0	1.0	0.4	0.6	1.0
	4	0.5	0.8	0.7	0.2	0.3	0.4
1999	1	1.1	1.7	1.5	0.5	1.1	1.1
	2	0.9	0.9	0.9	0.4	1.2	0.6
	3	1.3	2.0	1.7	0.9	1.4	1.1
	4	2.0	1.4	2.3	1.3	2.2	1.7
2000	1	1.9	1.8	2.2	1.8	2.1	3.2
	2	0.9	1.0	0.9	0.7	1.0	1.2
	3	1.0	1.4	1.7	1.3	1.3	1.1
	4	2.4	2.5	3.2	1.7	2.0	2.4
2001	1	1.7	2.0	1.4	1.9	1.6	1.3
	2	1.8	1.4	1.5	1.4	1.5	1.5
	3	1.1	0.9	1.4	1.0	0.6	1.3
	4	1.2	0.9	0.8	0.4	1.5	0.5
1995-2001	Average	1.3	1.5	1.4	1.0	1.2	1.3

[1] IR-1 is downwind of the restricted area.
IR-3 is upwind of the restricted area.
IR-4 is north of the restricted area near the 5I7 test site.
IR-5 is at the nearest residence, the Irigaray Ranch.
IR-6 is SE of the restricted area near the ridge road (background).
IR-13 is adjacent to the house trailer which provided on site housing for operators.

ND = No Data.

TABLE 5.12
CHRITENSEN ENVIRONMENTAL RADON GAS MONITORING SUMMARY

Monitoring Period		Radon Level in pCi/l			
		Monitoring Site[1]			
Year	Qtr.	AS-1	AS-5A	AS-5B	AS-6
1995	1	1.0	2.9	1.1	0.9
	2	1.2	1.1	1.2	6.2
	3	1.4	1.3	1.3	1.7
	4	1.2	1.0	1.5	1.4
1996	1	ND	0.8	1.0	1.0
	2	2.7	2.5	2.9	2.6
	3	2.3	2.2	2.3	2.6
	4	2.9	2.2	2.4	2.6
1997	1	0.8	1.0	1.1	0.4
	2	1.6	1.3	1.4	1.3
	3	1.2	0.9	0.7	0.8
	4	1.5	1.0	1.5	1.2
1998	1	0.7	1.3	1.3	1.0
	2	ND	1.0	0.7	0.3
	3	0.9	1.5	0.7	0.8
	4	0.7	0.7	0.6	0.8
1999	1	1.0	1.1	1.1	ND
	2	0.9	1.1	0.4	0.9
	3	1.0	1.1	1.2	1.3
	4	1.2	2.0	1.9	2.5
2000	1	3.3	2.4	2.4	2.2
	2	1.0	1.1	0.9	0.8
	3	1.0	0.9	0.8	1.7
	4	1.3	1.7	1.2	1.7
2001	1	1.7	1.8	2.6	1.5
	2	1.7	2.7	3.0	1.3
	3	1.1	2.1	2.5	1.0
	4	0.8	1.9	2.7	1.0
1995-2001	Average	1.4	1.5	1.5	1.5

[1] AS-1 is at Table Mountain (background).
AS-5A is upwind of the restricted area.
AS-5B is downwind of the restricted area.
AS-6 is at the nearest residence (Christensen Ranch).

ND = No Data.

5.13
ENVIRONMENTAL RADON RELEASE SUMMARY

Radon Release Calculation Period	Irigaray Radon Release[1] (Curies)	Christensen Ranch Radon Release[2] (Curies)
1995	58.5	739.8
1996	63.9	1125.1
1997	71.0	1231.7
1998	69.6	1384.4
1999	132.8	711.4
2000	214.5	434.0

1 Irigaray estimates based on 0.056 Ci/month/gpm for 1995 through 2nd Q, 1999. Release rate increased to 0.058 Ci/mo/gpm and then 0.059 Ci/month/gpm with transition to exclusive restoration in subsequent period.

2 Christensen Ranch estimates based on 0.027 Ci/month/gpm for 1995 through 2nd Q, 1999. Release rate increased to 0.034 Ci/mo/gpm and then 0.043 Ci/mo/gpm with transition to exclusive restoration in subsequent period.

Air Particulate

COGEMA performs high volume air particulate sampling at the Irigaray environmental monitoring stations on a continuous basis during dryer operations. Filters are changed weekly, then composited for quarterly analysis. Table 5.14 presents environmental air particulate monitoring data for 1995 through 2001 (the last sustained production run ended by June, 2000).

TABLE 5.14
IRIGARAY ENVIRONMENTAL AIR PARTICULATE MONITORING SUMMARY

MONITORING PERIOD AND CONSTITUENT	IR-1 DOWNWIND OF RESTRICTED AREA	IR-3 UPWIND OF RESTRICTED AREA	IR-13 EMPLOYEE HOUSE TRAILER	IR-5 IRIGARAY RANCH (NEAREST RESIDENT)	IR-6 RIDGE ROAD SE (BACKGROUND)
1995					
Uranium (uCi/ml)	1.13E-14	7.38E-15	2.94E-15	1.33E-15	7.87E-16
Thorium 230 (uCi/ml)	1.30E-16	1.22E-16	<1.0E-16	1.16E-16	<1.0E-16
Radium 226 (uCi/ml)	2.00E-16	3.06E-16	1.36E-16	1.02E-16	2.10E-16
Lead 210 (uCi/ml)	1.03E-14	1.07E-14	1.28E-14	8.75E-15	1.01E-14
1996					
Uranium (uCi/ml)	2.40E-14	3.48E-15	3.27E-15	4.13E-16	3.68E-16
Thorium 230 (uCi/ml)	1.30E-16	1.26E-16	<1.0E-16	1.21E-16	<1.0E-16
Radium 226 (uCi/ml)	3.07E-16	1.59E-16	2.02E-16	1.41E-16	1.18E-16
Lead 210 (uCi/ml)	1.51E-14	1.20E-14	1.26E-14	1.17E-14	1.29E-14
1997					
Uranium (uCi/ml)	7.02E-15	6.83E-15	2.43E-15	1.55E-15	4.33E-16
Thorium 230 (uCi/ml)	<1.0E-16	<1.0E-16	<1.0E-16	<1.0E-16	1.02E-16
Radium 226 (uCi/ml)	3.54E-16	1.82E-16	<1.0E-16	1.57E-16	1.15E-16
Lead 210 (uCi/ml)	1.03E-14	1.04E-14	1.14E-14	1.14E-14	1.24E-14
1998					
Uranium (uCi/ml)	2.22E-15	2.38E-15	7.82E-16	6.69E-16	4.76E-16
Thorium 230 (uCi/ml)	2.77E-16	1.20E-16	1.78E-16	3.10E-16	<1.0E-16
Radium 226 (uCi/ml)	1.64E-16	<1.0E-16	<1.0E-16	1.20E-16	1.30E-16
Lead 210 (uCi/ml)	1.37E-14	1.53E-14	1.54E-14	1.18E-14	1.33E-14
1999					
Uranium (uCi/ml)	1.38E-15	1.60E-15	7.05E-16	2.52E-16	8.22E-16
Thorium 230 (uCi/ml)	<1.0E-16	1.07E-16	<1.0E-16	1.08E-16	1.07E-16
Radium 226 (uCi/ml)	1.47E-16	<1.0E-16	2.97E-16	4.13E-16	1.61E-16
Lead 210 (uCi/ml)	1.13E-14	1.21E-14	1.14E-14	1.15E-14	1.06E-14
2000					
Uranium (uCi/ml)	7.35E-16	1.59E-15	2.08E-16	2.68E-16	5.50E-16
Thorium 230 (uCi/ml)	<1.0E-16	<1.0E-16	<1.0E-16	<1.0E-16	<1.0E-16
Radium 226 (uCi/ml)	<1.0E-16	<1.0E-16	<1.0E-16	1.14E-16	<1.0E-16
Lead 210 (uCi/ml)	7.04E-15	8.18E-15	7.64E-15	9.41E-15	1.73E-14
2001					
Uranium (uCi/ml)	1.28E-15	9.21E-16	4.48E-16	7.92E-16	2.43E-16
Thorium 230 (uCi/ml)	<1.0E-16	<1.0E-16	<1.0E-16	<1.0E-16	<1.0E-16
Radium 226 (uCi/ml)	1.83E-16	<1.0E-16	<1.0E-16	<1.0E-16	<1.0E-16
Lead 210 (uCi/ml)	1.26E-14	1.19E-14	1.24E-14	1.32E-14	1.20E-14
2005					
Uranium (uCi/ml)	3.01E-15	5.86E-15	2.28E-15	5.20E-16	4.61E-15
Thorium 230 (uCi/ml)	4.86E-16	4.86E-16	<4.79E-16	4.86E-16	<4.76E-16
Radium 226 (uCi/ml)	6.64E-16	5.77E-16	<4.79E16	4.86E-16	<4.76E-16
Lead 210 (uCi/ml)	6.45E-15	4.82E-15	5.65E-15	1.92E-14	5.21E-15

Soil and Vegetation

Soil and vegetation samples from Irigaray and Christensen Ranch were collected on an annual basis at the nine air quality sampling station locations. Sampling was normally performed in July in accordance with Standard Operating Procedure ENV-8, "Soil and Vegetation". The samples were collected at the five air quality monitoring sites at Irigaray (IR-1, IR-3, IR-4, IR-5 and IR-6) and at the four air quality monitoring sites at Christensen Ranch (AS-1, AS-5a, AS-5b and AS-6) using the following procedures:

- Soil A minimum of two pounds of soil was collected within a ten square foot section surrounding the sample point. The sample consisted of a composite of five to ten individual locations where the sample was taken from the top two inches of the surface. Soil was analyzed for natural uranium, radium-226, thorium-230 and lead-210. The results of annual soil sampling at the Irigaray and Christensen Ranch facilities is presented in Tables 5.15 and 5.16, respectively. No trends are apparent. Note that the annual environmental soil sampling was suspended after the project went exclusively into restoration.

- Vegetation A minimum of one pound of vegetation was collected at each site. The materials collected were primarily the seed/flower head and leafy portions of grasses and forbs along with young shoots of shrubs. Vegetation was analyzed for natural uranium, radium-226, thorium-230 and lead-210. The results of annual vegetation sampling at the Irigaray and Christensen Ranch facilities is presented in Tables 5.17 and 5.18, respectively. No trends are apparent. Note that annual environmental vegetation sampling was suspended after the project went exclusively into restoration.

TABLE 5.15
IRIGARAY ANNUAL SOIL SAMPLING SUMMARY

Location[1]	Year	U (pCi/g)	Ra-226 (pCi/g)	Th-230 (pCi/g)	Pb-210 (pCi/g)
IR-1	1995	2.80	1.30	0.80	0.00
	1996	2.56	1.20	0.70	0.60
	1997	2.80	1.60	0.83	0.80
	1998	5.48	1.30	0.80	0.70
	1999	3.38	1.10	0.93	1.01
	2000	4.50	1.32	0.90	1.52
	Average	**3.59**	**1.30**	**0.83**	**0.77**
IR-3	1995	419	1.1	0.5	2.1
	1996	77.2	1.3	0.7	1.4
	1997	7.03	1.1	0.71	0.5
	1998	9.21	1.2	0.5	0.4
	1999	10.4	0.96	0.55	0.44
	2000	11.1	0.83	0.64	0.5
	Average	**88.99**	**1.08**	**0.60**	**0.89**
IR-4	1995	1.4	1	1.9	2.1
	1996	0.54	1.1	0.6	0.1
	1997	0.45	0.9	0.52	1
	1998	0.62	0.8	0.5	1
	1999	0.43	0.87	0.52	1.13
	2000	0.53	0.82	0.65	1.38
	Average	**0.66**	**0.92**	**0.78**	**1.12**
IR-5	1995	1.4	1	0.5	0.4
	1996	0.61	0.7	0.5	0.8
	1997	0.75	0.9	0.64	1.1
	1998	0.76	0.6	0.6	0.4
	1999	0.64	0.7	0.32	1.12
	2000	0.67	0.67	0.43	1.01
	Average	**0.81**	**0.76**	**0.50**	**0.81**
IR-6	1995	1.5	1.3	0.8	1.3
	1996	0.9	1.1	0.5	1
	1997	1.01	1.8	0.76	0.7
	1998	1.09	1.1	0.8	0.6
	1999	0.72	0.88	0.42	0.93
	2000	0.98	1.07	0.95	0.74
	Average	**1.03**	**1.21**	**0.71**	**0.88**

[1] IR-1 is downwind of the restricted area.
IR-3 is upwind of the restricted area.
IR-4 is north of the restricted area near the 517 test site.
IR-5 is at the nearest residence, the Irigaray Ranch.
IR-6 is SE of the restricted area near the ridge road (background).

TABLE 5.16
CHRISTENSEN RANCH ANNUAL SOIL SAMPLING SUMMARY

Location[1]	Year	U (pCi/g)	Ra-226 (pCi/g)	Th-230 (pCi/g)	Pb-210 (pCi/g)
AS-1	1995	1.00	1.40	1.00	0.90
	1996	0.92	0.90	0.60	0.90
	1997	0.69	0.90	0.57	0.50
	1998	0.92	1.10	0.70	0.80
	1999	0.63	0.75	0.53	0.58
	2000	0.70	0.70	0.65	0.66
	Average	**0.81**	**0.96**	**0.68**	**0.72**
AS-5A	1995	1.00	1.00	0.70	1.70
	1996	1.14	1.30	0.70	0.80
	1997	2.12	1.40	1.17	1.00
	1998	2.74	1.40	0.90	1.00
	1999	1.98	1.46	0.80	0.79
	2000	2.65	1.54	1.05	0.92
	Average	**1.94**	**1.35**	**0.89**	**1.04**
AS-5B	1995	0.90	1.30	0.20	1.80
	1996	1.40	1.20	0.80	0.70
	1997	0.78	1.20	0.71	<0.05
	1998	1.65	1.30	1.00	0.70
	1999	1.07	1.12	0.57	0.64
	2000	1.39	1.20	0.83	0.43
	Average	**1.20**	**1.22**	**0.69**	**0.72**
AS-6	1995	1.50	1.40	0.50	1.50
	1996	1.07	1.30	0.70	0.10
	1997	0.97	1.20	0.67	1.10
	1998	2.49	3.10	2.00	1.30
	1999	4.69	8.85	3.31	2.12
	2000	1.14	0.99	0.88	1.12
	Average	**1.98**	**2.81**	**1.34**	**1.21**

[1] AS-1 is at Table Mountain (background).
AS-5A is upwind of the restricted area.
AS-5B is downwind of the restricted area.
AS-6 is at the nearest residence (Christensen Ranch).

TABLE 5.17
IRIGARAY ANNUAL VEGETATION SAMPLING SUMMARY

Location[1]	Year	U (μCi/kg)	Ra-226 (μCi/kg)	Th-230 (μCi/kg)	Pb-210 (μCi/kg)
IR-1	1995	1.7E-05	1.9E-07	2.2E-06	6.0E-07
	1996	1.2E-03	1.2E-04	7.5E-05	7.5E-05
	1997	3.1E-04	1.1E-04	2.9E-05	5.4E-05
	1998	1.1E-03	3.6E-05	4.6E-06	1.2E-04
	1999	7.4E-05	6.2E-06	6.1E-06	2.2E-05
	2000	1.2E-04	1.3E-06	1.2E-06	7.0E-05
	Average	**4.7E-04**	**4.6E-05**	**2.0E-05**	**5.7E-05**
IR-3	1995	1.8E-05	2.9E-07	1.1E-07	1.7E-06
	1996	3.7E-04	5.7E-04	1.9E-05	4.4E-04
	1997	1.6E-03	7.1E-05	2.0E-05	4.0E-05
	1998	1.3E-03	5.2E-05	2.9E-05	1.3E-04
	1999	6.0E-05	2.1E-06	2.8E-06	<1.4E-06
	2000	1.9E-04	7.4E-06	<4.2E-07	4.4E-05
	Average	**5.9E-04**	**1.2E-04**	**1.2E-05**	**1.1E-04**
IR-4	1995	1.5E-05	2.2E-07	7.0E-07	1.0E-06
	1996	6.7E-05	9.5E-05	3.4E-05	1.4E-04
	1997	2.7E-05	2.3E-05	7.1E-06	4.1E-05
	1998	2.6E-04	8.2E-05	8.4E-05	1.5E-04
	1999	2.7E-05	7.2E-06	3.3E-06	3.8E-05
	2000	1.5E-04	6.4E-06	5.2E-06	8.1E-05
	Average	**9.1E-05**	**3.6E-05**	**2.2E-05**	**7.5E-05**
IR-5	1995	5.0E-07	2.5E-07	0.0E+00	8.0E-07
	1996	4.1E-05	1.3E-05	5.3E-05	3.9E-05
	1997	4.4E-06	9.7E-07	< 3.3E-07	3.1E-05
	1998	2.0E-05	1.1E-05	8.5E-06	4.2E-05
	1999	5.2E-03	6.0E-06	4.9E-06	4.5E-05
	2000	1.6E-05	5.6E-06	<4.2E-07	<2.1E-06
	Average	**8.8E-04**	**6.1E-06**	**1.1E-05**	**2.7E-05**
IR-6	1995	3.0E-07	3.5E-07	2.0E-07	2.0E-07
	1996	7.5E-05	6.2E-05	2.4E-05	1.1E-04
	1997	8.3E-05	5.0E-05	2.4E-05	1.0E-04
	1998	5.9E-05	1.9E-05	2.4E-06	8.4E-05
	1999	3.9E-05	1.4E-05	7.7E-06	2.9E-05
	2000	3.6E-05	2.0E-06	1.2E-06	4.8E-05
	Average	**4.9E-05**	**2.5E-05**	**9.9E-06**	**6.2E-05**

[1] IR-1 is downwind of the restricted area.
IR-3 is upwind of the restricted area.
IR-4 is north of the restricted area near the 5I7 test site.
IR-5 is at the nearest residence, the Irigaray Ranch.
IR-6 is SE of the restricted area near the ridge road (background).

TABLE 5.18
CR ANNUAL VEGETATION SAMPLING SUMMARY

Location[1]	Year	U (μCi/kg)	Ra-226 (μCi/kg)	Th-230 (μCi/kg)	Pb-210 (μCi/kg)
AS-1	1995	7.00E-07	3.30E-07	1.10E-06	6.00E-07
	1996	2.40E-05	3.30E-05	4.20E-05	3.40E-05
	1997	7.50E-05	5.70E-05	2.30E-05	1.50E-04
	1998	3.30E-05	2.30E-05	2.26E-05	1.40E-04
	1999	1.10E-05	7.70E-06	3.10E-06	4.80E-05
	2000	2.40E-05	1.20E-06	<4.2E-07	<2.1E-06
	Average	**2.8E-05**	**2.0E-05**	**1.5E-05**	**6.2E-05**
AS-5A	1995	6.00E-07	3.10E-07	7.00E-07	6.00E-07
	1996	3.50E-05	2.40E-05	1.50E-05	7.70E-05
	1997	1.10E-04	2.50E-04	5.30E-05	9.00E-05
	1998	5.67E-06	5.60E-07	<2.20E-07	1.20E-05
	1999	8.90E-06	1.43E-05	2.70E-06	5.00E-05
	2000	6.50E-05	2.40E-06	1.40E-06	4.20E-05
	Average	**3.8E-05**	**4.9E-05**	**1.2E-05**	**1.1E-04**
AS-5B	1995	8.00E-07	3.00E-07	4.00E-07	1.10E-06
	1996	3.90E-05	2.40E-05	1.50E-05	4.80E-05
	1997	3.60E-05	3.20E-05	1.50E-05	3.20E-05
	1998	6.64E-06	7.50E-06	5.30E-06	1.80E-05
	1999	1.50E-05	1.13E-05	3.40E-06	4.70E-05
	2000	1.30E-05	1.40E-06	<4.2E-07	<2.1E-06
	Average	**1.8E-05**	**1.3E-05**	**6.6E-06**	**2.5E-05**
AS-6	1995	4.00E-07	2.00E-07	7.00E-07	1.20E-06
	1996	1.50E-04	9.70E-05	3.60E-05	8.40E-05
	1997	2.30E-05	1.20E-05	4.70E-05	6.30E-05
	1998	3.23E-06	2.10E-05	1.96E-05	1.10E-04
	1999	8.20E-06	8.90E-06	5.00E-06	4.40E-05
	2000	1.20E-05	1.90E-06	<4.2E-07	3.70E-05
	Average	**3.3E-05**	**2.4E-05**	**1.8E-05**	**5.7E-05**

[1] AS-1 is at Table Mountain (background).
AS-5A is upwind of the restricted area.
AS-5B is downwind of the restricted area.
AS-6 is at the nearest residence (Christensen Ranch).

Direct Radiation

Environmental gamma radiation levels were monitored continuously at the nine air quality monitoring stations (see Figure 5.5) in accordance with the instructions currently contained in Standard Operating Procedure ENV-6, "Environmental Gamma Detection." Gamma radiation was monitored through the use of thermoluminescent dosimeters (TLDs) obtained from Eberline Instrument Corporation. TLDs were exchanged on a quarterly basis. In addition to the Quality Assurance performed by Eberline, COGEMA provided one blind duplicate TLD per quarter. Results of the annual gamma radiation monitoring are shown in Tables 5.19 and 5.20. No trends are apparent.

TABLE 5.19
IRIGARAY ENVIRONMENTAL GAMMA MONITORING SUMMARY
As Measured by TLD Badges at Monitoring Locations

Monitoring Period		Gamma Radiation in mrem/quarter					
		Monitoring Site[1]					
Year	Qtr.	IR-1	IR-3	IR-4	IR-5	IR-6	IR-13
1995	1	54.2	40.6	33.6	31.8	33.8	N/D
	2	59.2	40.8	34.4	29.4	33.2	N/D
	3	45.2	40.2	30.8	27.4	30.6	N/D
	4	47.4	41.6	33.8	27.8	34	23.2
	Annual Sum	**206.0**	**163.2**	**132.6**	**116.4**	**131.6**	**23.2**
1996	1	52.6	52.8	42.6	39	41	44.8
	2	51	45.8	36.4	30.6	35.4	37
	3	39.8	32	27	25.2	25.8	27.6
	4	39.6	33.8	32.6	30.4	33.2	43
	Annual Sum	**183.0**	**164.4**	**138.6**	**125.2**	**135.4**	**152.4**
1997	1	63.9	55.2	31	29.4	37.4	40.4
	2	62.2	49.4	27	26.8	29.8	27.8
	3	40.2	53.4	34.6	32	34.6	37
	4	56.6	55.8	45.8	33	41.2	39.8
	Annual Sum	**222.9**	**213.8**	**138.4**	**121.2**	**143.0**	**145.0**
1998	1	96.6	69.2	44.8	40.4	43.2	47.6
	2	94.2	64	41.2	35.6	36.8	36
	3	66.8	66.4	46	39.2	41.8	53.8
	4	37.4	49.2	31.2	26.2	31.2	32.6
	Annual Sum	**295**	**248.8**	**163.2**	**141.4**	**153**	**170**
1999	1	61.4	89	63.2	49.6	60.2	64
	2	39.2	54	35.8	32	32.8	41.2
	3	47.8	58	43.4	39.4	45.2	49.8
	4	43.4	47.4	37.2	36	38	38.6
	Annual Sum	**191.8**	**248.4**	**179.6**	**157**	**176.2**	**193.6**
2000	1	36.6	54.6	38	30.4	38.6	41
	2	40.6	49.8	34.4	30.8	30	33.2
	3	51.4	50.4	38.8	N/D	33.4	42.2
	4	23	34	29	26	29	29
	Annual Sum	**151.6**	**188.8**	**140.2**	**87.2**	**131**	**145.4**
2001	1	30	38	45	31	34	37
	2	34	47	38	35	38	40
	3	39	43	33	30	34	35
	4	46	51	41	35	39	40
	Annual Sum	**149**	**179**	**157**	**131**	**145**	**152**
1995-2001	**Avg. Annual**	**199.9**	**200.9**	**149.9**	**132.0**	**145.0**	**159.7**

[1] IR-1 is downwind of the restricted area. N/D = No Data.
IR-3 is upwind of the restricted area.
IR-4 is north of the restricted area near the 5I7 test site.
IR-5 is at the nearest residence, the Irigaray Ranch.
IR-6 is SE of the restricted area near the ridge road (background).
IR-13 is adjacent to the house trailer which provided on site housing for operators.

TABLE 5.20
CHRISTENSEN RANCH ENVIRONMENTAL GAMMA MONITORING SUMMARY
As Measured by TLD Badges at Monitoring Locations

Monitoring Period		Gamma Radiation in mrem/quarter			
		Monitoring Site[1]			
Year	Qtr.	AS-1	AS-5A	AS-5B	AS-6
1995	1	35	40	46.6	40.2
	2	33.8	36.8	35.2	32.4
	3	32.4	36.6	37.2	39.2
	4	36	36	37.4	34.8
	Annual Sum	**137.2**	**149.4**	**156.4**	**146.6**
1996	1	42	44.8	46.8	46
	2	33.6	35.4	40	37
	3	21.4	26	23.6	29.2
	4	29.2	34.6	42	41
	Annual Sum	**126.2**	**140.8**	**152.4**	**153.2**
1997	1	37.6	44.4	42.2	45
	2	26.4	33.4	31	29
	3	31	37.6	34	33.8
	4	40.2	38.2	46.4	42
	Annual Sum	**135.2**	**153.6**	**153.6**	**149.8**
1998	1	39.6	49.6	50.6	42.6
	2	35	41.8	35.4	43.6
	3	44	47	44.2	42.4
	4	31.2	33	N/D	34.2
	Annual Sum	**149.8**	**171.4**	**130.2**	**162.8**
1999	1	58.2	70.2	N/D	72.6
	2	34.2	38.8	37.6	37.4
	3	43.4	49.4	48.6	49.4
	4	-1	43.4	40.2	44.2
	Annual Sum	**134.8**	**201.8**	**126.4**	**203.6**
2000	1	35.6	39.6	37.8	41.6
	2	36.4	35.2	34.8	37.6
	3	44	45.6	37	47.4
	4	26	25	30	31
	Annual Sum	**142**	**145.4**	**139.6**	**157.6**
2001	1	36	36	37	32
	2	36	43	38	43
	3	33	36	35	37
	4	37	43	39	2.9
	Annual Sum	**142**	**158**	**149**	**114.9**
1995-2001	**Avg. Annual**	**138.2**	**160.1**	**150.2**	**157.0**

[1] AS-1 is at Table Mountain (background).
AS-5A is upwind of the restricted area.
AS-5B is downwind of the restricted area.
AS-6 is at the nearest residence (Christensen Ranch).
N/D = No Data.

Proposed Airborne Effluent and Environmental Monitoring Program

COGEMA proposes to resume the Airborne Effluent and Environmental Monitoring Program described in this section. A summary of the proposed airborne effluent and environmental monitoring program is provided in Tables 5-21 and 5-22.

TABLE 5.21
CHRISTENSEN RANCH ENVIRONMENTAL AIRBORNE EFFLUENT MONITORING PROGRAM

		SAMPLE COLLECTION				SAMPLE ANALYSIS	
MONITORED CONSTITUENT	NO.	LOCATION	TYPE	FREQUENCY	METHOD	FREQUENCY	PARAMETER
Air (Radon)	4	1) One directly upwind from restricted area boundary, AS5a 2) One downwind from restricted area boundary, AS5b 3) John Christensen Ranch (nearest residence), AS6 4) Table Mountain (remote background), AS1	Continuous	Quarterly exchange of cups	Terradex Trac-Etch Type F1 Cups or equivalent	Quarterly	Rn-222
Soils and Vegetation	4	Same locations as for radon (above)	Grab	Annually	Composite Sample	Annually	Uranium Ra-226 Th-230 Pb-210
Direct Radiation	4	Same locations as for radon (above)	Continuous	Quarterly exchange of dosimeters	Continuous passive integrating dosimeters, Eberline Ruggedized Environmental Spherical or equivalent	Quarterly	External gamma ray exposure rate

TABLE 5.22
IRIGARAY ENVIRONMENTAL AIRBORNE EFFLUENT MONITORING PROGRAM

		SAMPLE COLLECTION				SAMPLE ANALYSIS	
MONITORED CONSTITUENT	NO.	LOCATION	TYPE	FREQUENCY	METHOD	FREQUENCY	PARAMETER
Air (Radon)	5	1) One directly upwind from restricted area boundary, IR-3 2) One downwind from restricted area boundary, IR-1 3) North Access Road, IR-4 (5I7 Test Site) 4) Irigaray Ranch, IR-5 5) Ridge Road Southeast, IR-6	Continuous	Quarterly exchange of cups	Terradex Trac-Etch Type F1 Cups or equivalent	Quarterly	Rn-222
Air (Particulate)	5	Same locations as for radon (above). Employee house trailer, IR-13, may be substituted for IR-4	Continuous during dryer operation	Weekly	Composite air filter sample	Quarterly	Uranium, Ra-226, Th-230, Pb-210
	1	Yellowcake dryer stack	Isokinetic	Semi-Annually	40 CFR 60	Semi-Annually	Uranium Release Rates
Soils and Vegetation	5	Same locations as for radon (above)	Grab	Annually	Composite Sample	Annually	Uranium, Ra-226, Th-230, Pb-210
Direct Radiation	5	Same locations as for radon (above)	Continuous	Quarterly exchange of dosimeters	Continuous passive integrating dosimeters, Eberline Ruggedized Environmental Spherical or equivalent	Quarterly	External gamma ray exposure rate

5.8.2 GROUNDWATER AND SURFACE WATER MONITORING PROGRAM

Program Description

During past operations at the Irigaray and Christensen Ranch facilities, a detailed water sampling program was conducted to identify any potential impacts to water resources of the area. COGEMA's operational water monitoring program included the evaluation of groundwater on a regional basis, groundwater within individual well fields within the permit or licensed area and surface water on a regional and site specific basis. These programs are described in more detail following.

5.8.2.1 Regional Groundwater Monitoring

Historical Results

Five stock watering and domestic water wells are located within two kilometers of the Christensen Ranch mining area and one well is located near Irigaray that have been routinely sampled. Baseline data from these wells were collected prior to mining for reference to operational sampling results. Grab samples of groundwater from these wells were collected on a quarterly frequency when the wells were operational, with the exception of Willow No. 2 at Irigaray, where there is only a semi-annual sampling requirement. Groundwater monitoring results were submitted in the semi-annual activity and monitoring reports submitted to NRC. A summary table of regional groundwater monitoring results for Irigaray and Christensen Ranch since 1995 can be found in Table 5.23 As can be seen from Table 5.23, no variances are seen which can be attributed to the mining operations.

Proposed Program

COGEMA proposes to institute the same regional groundwater monitoring program during future operations. Table 5.24 summarizes the proposed regional groundwater sampling program.

5.8.2.2 Mine Unit Groundwater Monitoring

Historical Results

Since existing wellfields restoration has been completed and approved by DEQ and the NRC for the Irigaray property, this discussion focuses on the Christensen Ranch operation. The Christensen Ranch monitor wells are completed in a minimum of three different stratigraphic horizons for monitoring the containment of mining solutions in the wellfields during operations. The ore zone wells have the same completed ore zone interval within the host sandstone (K sandstone) as the adjacent production and injection wells so as to

intercept and detect any migration of mining solutions. In addition, monitor wells are completed in the overlying and underlying aquifers directly above and below the ore zone sandstone for detection of any vertical migration of mining solutions. Installed monitor well spacing and frequency at Christensen is as follows:

	Distance From Well Field (feet)	Spacing Between Monitoring Wells (feet)
Ore Zone, Downgradient	300	300
Ore Zone, Sides	500	500
Ore Zone, Upgradient	500	500
Overlying Monitor Wells	One well per 3.5 acres of well field pattern area	
Underlying Monitor Wells	One well per 3.5 acres of well field pattern area	

Monitor Well Baseline Water Quality

After delineation of the mine unit boundaries, monitor wells have been installed according to the previously noted spacing and frequency. After completion, wells were washed out and developed (by air flushing or pumping) until water quality in terms of pH and specific conductivity appeared stable and consistent with the anticipated quality of the area. After development, wells were sampled to obtain baseline water quality.

Table 5.23
REGIONAL GROUNDWATER MONITORING RESULTS

Location	Year	Quarters	U (μCi/ml)	Ra_{226} (μCi/ml)	Th_{230} (μCi/ml)	Pb_{210} (μCi/ml)	Po_{210} (μCi/ml)
Willow No. 2 (Irigaray)	1995	1 & 2	<2.0E-10	<2.0E-10	<2.0E-10	1.90E-09	<1.0E-9
		3 & 4	<2.0E-10	<2.0E-10	<2.0E-10	1.40E-09	<1.0E-9
	1996	1 & 2	<6.8E-10	<9.0E-10	<1.5E-9	<6.3E-9	<2.0E-9
		3 & 4	<6.8E-10	<6.0E-10	<7.0E-10	<7.6E-9	<2.2E-9
	1997	1 & 2	<7.0E-10	<1.5E-09	2.80E-09	<5.6E-09	<4.4E-09
		3 & 4	8.00E-10	<2.0E-10	<1.0E-09	<1.0E-09	<1.0E-09
	1998	1 & 2	<2.0E-10	<2.0E-10	<2.0E-10	<1.0E-09	<1.0E-09
		3 & 4	<2.0E-10	<2.0E-10	<2.0E-10	<1.0E-09	<1.0E-09
	1999	1 & 2	<2.0E-10	<2.0E-10	<2.0E-10	<1.0E-09	<1.0E-09
		3 & 4	<2.0E-10	<2.0E-10	<2.0E-10	<1.0E-09	<1.0E-09
	2000	1 & 2	3.00E-10	<2.0E-10	<2.0E-10	<1.0E-09	<1.0E-09
		3 & 4	3.00E-10	1.10E-09	<2.0E-10	<1.0E-09	<1.0E-09
	2001	1 & 2	<0.2E-09	<2.0E-10	<0.2E-09	<1.0E-09	<1.0E-09
		3 & 4	<0.2E-09	<2.0E-10	<0.2E-09	<1.0E-09	<1.0E-09
	2002	---	<0.2E-09	<2.0E-10	<0.2E-09	<2.7E-09	<2.7E-09
	2003	---	<2.0E-10	7.00E-10	<2.0E-10	<2.7E-09	<2.7E-09
	2004	---	<0.2E-09	3.00E-10	2.00E-10	<2.7E-09	<2.7E-09
	2005	---	<2.0E-10	<2.0E-10	<2.0E-10	4.80E-09	<1.0E-09
	2006	---	<2.0E-10	<2.0E-10	<2.0E-10	<1.0E-09	<1.0E-09
	2007	---	<2.0E-10	<1.0E-9	<2.0E-10	<1.0E-09	<1.0E-09
Christensen Ranch No. 3	1995	1	1.20E-08	1.50E-09	<2.0E-10	1.90E-09	<1.0E-09
		2	9.50E-09	3.20E-09	6.00E-10	1.70E-09	8.00E-10
		3	1.50E-08	1.10E-09	<2.0E-10	5.60E-09	<1.0E-09
		4	1.80E-08	1.50E-09	<2.0E-10	<1.0E-09	6.00E-10
	1996	1	1.60E-08	1.60E-09	<1.4E-9	<6.3E-9	<2.6E-9
		2	1.60E-08	<1.8E-9	<1.4E-9	<6.0E-9	<2.3E-9
		3	1.40E-09	1.70E-09	<7.0E-10	<7.6E-9	<2.9E-9
		4	1.50E-08	1.60E-09	<5.0E-10	8.00E-09	<1.7E-9
	1997	1	1.60E-08	1.10E-09	1.50E-09	<5.3E-09	<1.5E-09
		2	<7.0E-10	2.20E-09	1.10E-09	9.60E-09	<2.4E-09
		3	9.10E-09	<1.5E-9	<1.3E-9	<5.6E-09	2.70E-09
		4	1.60E-08	1.20E-09	<2.0E-10	<1.0E-09	6.50E-09
	1998	1	2.40E-08	1.40E-09	<2.0E-10	6.80E-09	5.50E-09
		2	1.70E-08	1.60E-09	<2.0E-10	4.50E-09	4.90E-09
		3	1.70E-08	1.70E-09	<2.0E-10	<1.0E-09	2.40E-09
		4	1.70E-08	1.10E-09	<2.0E-10	<1.0E-09	<1.0E-09
	1999	1	1.60E-08	9.00E-10	<2.0E-10	<1.0E-09	<1.0E-09
		2	1.40E-08	1.10E-09	<2.0E-10	<1.0E-09	5.20E-09
		3	1.77E-08	1.00E-09	<2.0E-10	<1.0E-09	<1.0E-09
		4	1.60E-08	<2.0E-10	<2.0E-10	<1.0E-09	<1.0E-09
	2000	1	1.39E-08	9.00E-10	<2.0E-10	<1.0E-09	<1.0E-09
		2	1.81E-08	8.00E-10	<2.0E-10	<1.0E-09	<1.0E-09
		3	1.70E-08	1.10E-09	<2.0E-10	<1.0E-09	<1.0E-09

		4	1.20E-08	8.00E-10	<2.0E-10	<1.0E-09	<1.0E-09
	2001	1	1.69E-08	1.60E-09	<2.0E-10	<1.0E-09	<1.0E-09
		2	1.49E-08	1.30E-09	<2.0E-10	<1.0E-09	<1.0E-09
		3	2.29E-08	2.20E-09	<2.0E-10	<1.0E-09	<1.0E-09
		4	1.88E-08	7.00E-10	<2.0E-10	<1.0E-09	<1.0E-09
	2002	---	1.65E-08	7.00E-10	<2.0E-10	<2.7E-09	<2.7E-09
	2003	---	1.60E-08	1.70E-09	<2.0E-10	<2.7E-09	3.10E-09
	2004	---	9.70E-09	1.80E-09	<2.0E-10	<2.7E-09	<2.7E-09
	2005	---	1.00E-08	1.00E-09	<2.0E-10	<1.0E-09	<1.0E-09
	2006	---	1.00E-09	<2.0E-10	<2.0E-10	<1.0E-09	<1.0E-09
	2007	---	1.60E-08	2.00E-09	<2.0E-10	<1.0E-09	<1.0E-09
Ellendale No. 4 (Christensen)	1995	1	<2.0E-10	4.00E-10	<2.0E-10	<1.0E-09	<1.0E-09
		2	1.30E-08	5.00E-09	5.00E-10	1.80E-09	5.00E-10
		3	1.10E-09	2.00E-10	<2.0E-10	1.20E-09	1.50E-09
		4	6.80E-10	1.40E-09	<2.0E-10	<1.0E-09	<1.0E-09
	1996	1	<6.8E-10	<9.0E-10	<1.5E-09	<6.3E-09	<3.2E-09
		2	<6.8E-10	<1.8E-09	3.50E-09	<6.0E-09	<2.4E-09
		3	<6.8E-10	6.80E-08	<8E-10	<7.6E-09	<5.5E-09
		4	<6.8E-10	<1.1E-09	2.70E-09	7.00E-09	<2.5E-09
	1997	1	8.00E-10	1.20E-09	<1.8E-09	<5.3E-09	<2.8E-09
		2	<7.0E-10	<1.1E-09	2.10E-09	8.80E-09	<3.2E-09
		3	<7.0E-10	<1.5E-09	<1.2E-09	<5.6E-09	<5.2E-09
		4	9.40E-10	<2.0E-10	<2.0E-10	<1.0E-09	2.00E-09
	1998	1	1.70E-09	<2.0E-10	<2.0E-10	<1.0E-09	<1.0E-09
		2	3.30E-09	<2.0E-10	<2.0E-10	<1.0E-09	<1.0E-09
		3	5.00E-10	<2.0E-10	<2.0E-10	6.20E-09	6.70E-09
		4	<2.0E-10	<2.0E-10	<2.0E-10	<1.0E-09	7.50E-09
	1999	1	7.00E-10	<2.0E-10	<2.0E-10	<1.0E-09	<1.0E-09
		2	5.00E-10	<2.0E-10	<2.0E-10	<1.0E-09	<1.0E-09
		3	7.00E-10	<2.0E-10	<2.0E-10	<1.0E-09	<1.0E-09
		4	7.00E-10	<2.0E-10	<2.0E-10	<1.0E-09	<1.0E-09
	2000	1	6.00E-11	<2.0E-10	<2.0E-10	<1.0E-09	<1.0E-09
		2	9.00E-10	6.00E-10	<2.0E-10	<1.0E-09	<1.0E-09
		3	1.00E-09	<2.0E-10	<2.0E-10	<1.0E-09	<1.0E-09
		4	1.10E-09	<2.0E-10	<2.0E-10	<1.0E-09	<1.0E-09
	2001	1	7.00E-10	<2.0E-10	<2.0E-10	<1.0E-09	<1.0E-09
		2	6.00E-10	<2.0E-10	<2.0E-10	<1.0E-09	<1.0E-09
		3	1.30E-09	<2.0E-10	<2.0E-10	<1.0E-09	<1.0E-09
		4	7.00E-10	<2.0E-10	<2.0E-10	<1.0E-09	<1.0E-09
	2002	---	1.10E-09	<2.0E-10	<2.0E-10	<2.7E-09	<2.7E-09
	2003	---	<2.0E-10	2.00E-10	<2.0E-10	<2.7E-09	<2.7E-09
	2004	---	5.40E-10	5.00E-10	<2.0E-10	<2.7E-09	<2.7E-09
	2005	---	NST	NST	NST	NST	NST
	2006	---	4.00E-10	1.20E-06	<2.0E-10	<1.0E-09	<1.0E-09
	2007	---	NST	NST	NST	NST	NST
Willow Corral	1995	1	<2.0E-10	2.00E-10	<2.0E-10	<1.0E-09	<1.0E-09

No. 32 (Christensen)		2	<6.8E-10	1.90E-09	5.00E-10	2.20E-09	1.00E-09
		3	2.70E-10	<2.0E-10	<2.0E-10	<1.0E-09	<1.0E-09
		4	<6.8E-10	8.00E-10	<2.0E-10	<1.0E-09	4.00E-10
	1996	1	<6.8E-10	<9.0E-10	<1.4E-09	<6.3E-09	<2.9E-09
		2	<6.8E-10	<1.8E-09	<2.1E-09	<6.0E-09	<2.4E-09
		3	<6.8E-10	<6.0E-10	<6.0E-10	<7.6E-09	<3.2E-09
		4	<6.8E-10	<1.1E-09	<5.3E-10	<5.8E-09	<3.7E-09
	1997	1	<7.0E-10	8.00E-10	<1.3E-09	<5.3E-09	<1.9E-09
		2	<7.0E-10	<1.1E-09	3.00E-09	<6.4E-09	<3.0E-09
		3	<7.0E-10	<1.5E-09	1.70E-09	<5.6E-09	<3.5E-09
		4	7.40E-10	<2.0E-10	<2.0E-10	<1.0E-09	<1.0E-09
	1998	1	<2.0E-10	<2.0E-10	<2.0E-10	<1.0E-09	<1.0E-09
		2	<2.0E-10	<2.0E-10	<2.0E-10	<1.0E-09	<1.0E-09
		3	<2.0E-10	<2.0E-10	<2.0E-10	<1.0E-09	<1.0E-09
		4	<2.0E-10	<2.0E-10	<2.0E-10	<1.0E-09	<1.0E-09
	1999	1	<2.0E-10	<2.0E-10	<2.0E-10	<1.0E-09	<1.0E-09
		2	<2.0E-10	<2.0E-10	<2.0E-10	<1.0E-09	<1.0E-09
		3	2.00E-10	<2.0E-10	<2.0E-10	<1.0E-09	5.60E-09
		4	<2.0E-10	<2.0E-10	<2.0E-10	<1.0E-09	<1.0E-09
	2000	1	<2.0E-10	<2.0E-10	<2.0E-10	<1.0E-09	<1.0E-09
		2	<2.0E-10	<2.0E-10	<2.0E-10	<1.0E-09	<1.0E-09
		3	<2.0E-10	<2.0E-10	<2.0E-10	<1.0E-09	<1.0E-09
		4	<2.0E-10	8.00E-10	<2.0E-10	<1.0E-09	<1.0E-09
Willow Corral No. 32 (Christensen)	2001	1	<2.0E-10	8.00E-10	<2.0E-10	<1.0E-09	<1.0E-09
		2	<2.0E-10	<2.0E-10	<2.0E-10	<1.0E-09	<1.0E-09
		3	1.50E-09	<2.0E-10	<2.0E-10	<1.0E-09	<1.0E-09
		4	<2.0E-10	<2.0E-10	<2.0E-10	<1.0E-09	<1.0E-09
	2002	---	<2.0E-10	<2.0E-10	<2.0E-10	<2.7E-09	<2.7E-09
	2003	---	<2.0E-10	<2.0E-10	<2.0E-10	<2.7E-09	<2.7E-09
	2004	---	<2.0E-10	4.00E-10	<2.0E-10	<2.7E-09	<2.7E-09
	2005	---	NST	NST	NST	NST	NST
	2006	---	<2.0E-10	1.20E-08	<2.0E-10	<1.0E-09	<1.0E-09
	2007	---	<2.0E-10	<1.0E-09	<2.0E-10	<1.0E-09	<1.0E-09
First Artesian No. 1 (Christensen)	1995	1	<2.0E-10	1.00E-09	<2.0E-10	<1.0E-09	<1.0E-09
		2	<1.0E-10	2.98E-08	4.92E-08	8.70E-09	7.00E-09
		3	7.00E-09	7.00E-10	<2.0E-10	1.10E-09	1.80E-09
		4	2.70E-09	1.00E-09	<2.0E-10	3.00E-10	<1.0E-09
	1996	1	4.10E-09	<9.0E-10	<1.3E-09	<6.3E-09	<2.3E-09
		2	<6.8E-10	<1.8E-09	<2.0E-09	<6.0E-09	<2.3E-09
		3	6.80E-10	1.30E-09	<9.0E-10	<7.6E-09	<6.4E-09
		4	<6.8E-10	<1.1E-09	<4.7E-10	<5.8E-09	<2.4E-09
	1997	1	7.00E-10	1.00E-09	<1.9E-09	<5.3E-09	<1.5E-09
		2	7.40E-09	2.40E-09	3.20E-09	9.50E-09	<2.3E-09
		3	4.80E-09	<1.5E-09	<1.3E-09	<5.6E-09	<2.5E-09
		4	4.40E-09	<2.0E-10	<2.0E-10	<1.0E-09	<1.0E-09
	1998	1	6.00E-10	1.20E-09	<2.0E-10	<1.0E-09	<1.0E-09
		2	<2.0E-10	<2.0E-10	<2.0E-10	<1.0E-09	<1.0E-09
		3	<2.0E-10	<2.0E-10	<2.0E-10	<1.0E-09	<1.0E-09

		4	6.00E-08	6.00E-08	<2.0E-10	<1.0E-09	<1.0E-09
	1999	1	1.20E-09	<2.0E-10	<2.0E-10	<1.0E-09	<1.0E-09
		2	6.70E-09	<2.0E-10	<2.0E-10	<1.0E-09	<1.0E-09
		3	5.00E-10	<2.0E-10	<2.0E-10	<1.0E-09	<1.0E-09
		4	7.00E-10	<2.0E-10	<2.0E-10	<1.0E-09	<1.0E-09
	2000	1	7.00E-10	<2.0E-10	<2.0E-10	<1.0E-09	<1.0E-09
		2	<2.0E-10	<2.0E-10	<2.0E-10	<1.0E-09	<1.0E-09
		3	5.00E-10	<2.0E-10	<2.0E-10	<1.0E-09	<1.0E-09
		4	6.00E-10	3.00E-10	<2.0E-10	<1.0E-09	<1.0E-09
	2001	1	9.00E-10	<2.0E-10	<2.0E-10	<1.0E-09	<1.0E-09
		2	<2.0E-10	<2.0E-10	<2.0E-10	<1.0E-09	<1.0E-09
		3	9.50E-09	<2.0E-10	<2.0E-10	<1.0E-09	<1.0E-09
		4	3.00E-10	<2.0E-10	<2.0E-10	<1.0E-09	<1.0E-09
	2002	---	NST	NST	NST	NST	NST
	2003	---	NST	NST	NST	NST	NST
	2004	---	5.40E-10	3.00E-10	<2.0E-10	<2.7E-09	<2.7E-09
	2005	---	NST	NST	NST	NST	NST
	2006	---	6.00E-09	<2.0E-10	<2.0E-10	<1.0E-09	<1.0E-09
	2007	---	1.40E-08	<1.0E-09	<2.0E-10	<1.0E-09	<1.0E-09
Middle Artesian No. 2 (Christensen)	1995	1	NST	NST	NST	NST	NST
		2	3.80E-08	3.60E-09	2.00E-09	1.70E-09	7.00E-10
		3	NST	NST	NST	NST	NST
		4	NST	NST	NST	NST	NST
	1996	1	NST	NST	NST	NST	NST
		2	1.35E-08	<1.8E-09	<1.9E-09	<6.0E-09	<1.4E-09
		3	1.35E-08	1.10E-09	<7.0E-10	8.30E-09	<3.9E-09
		4	1.35E-08	<1.1E-09	<6.0E-10	7.60E-09	<1.9E-09
	1997	1	1.60E-08	<8.0E-10	1.40E-09	<5.3E-09	<2.8E-09
		2	<7.0E-10	1.30E-09	1.90E-09	1.10E-08	<3.3E-09
		3	6.80E-09	<1.5E-09	<6.0E-10	<5.6E-09	<2.4E-09
		4	1.00E-08	1.50E-09	<2.0E-10	<1.0E-09	<1.0E-09
	1998	1	NST	NST	NST	NST	NST
Middle Artesian No. 2 (Christensen)		2	6.50E-09	<2.0E-10	<2.0E-10	<1.0E-09	<1.0E-09
		3	1.00E-09	<2.0E-10	<2.0E-10	<1.0E-09	<1.0E-09
		4	9.10E-09	8.00E-08	<2.0E-10	<1.0E-09	<1.0E-09
	1999	1	6.20E-09	<2.0E-10	<2.0E-10	<1.0E-09	5.00E-09
		2	<2.0E-10	<2.0E-10	<2.0E-10	<1.0E-09	<1.0E-09
		3	6.00E-10	8.00E-10	<2.0E-10	<1.0E-09	<1.0E-09
		4	1.00E-09	3.10E-09	<2.0E-10	<1.0E-09	<1.0E-09
	2000	1	3.40E-09	7.00E-10	<2.0E-10	<1.0E-09	<1.0E-09
		2	7.50E-09	1.10E-09	<2.0E-10	<1.0E-09	<1.0E-09
		3	3.40E-09	<2.0E-10	<2.0E-10	<1.0E-09	<1.0E-09
		4	1.40E-09	<2.0E-10	<2.0E-10	<1.0E-09	3.00E-09
	2001	1	1.40E-09	6.00E-10	<2.0E-10	<1.0E-09	<1.0E-09
		2	3.30E-09	<2.0E-10	<2.0E-10	<1.0E-09	<1.0E-09
		3	4.20E-09	<2.0E-10	<2.0E-10	<1.0E-09	<1.0E-09

		4	2.90E-09	6.00E-10	<2.0E-10	<1.0E-09	<1.0E-09
	2002	---	2.10E-09	<2.0E-10	<2.0E-10	<2.7E-09	<2.7E-09
	2003	---	<2.0E-10	3.00E-10	<2.0E-10	<2.7E-09	<2.7E-09
	2004	---	1.00E-09	6.00E-10	3.00E-10	<2.7E-09	<2.7E-09
	2005	---	NST	NST	NST	NST	NST
	2006	---	<2.0E-10	1.00E-09	<2.0E-10	<1.0E-09	<1.0E-09
	2007	---	<2.0E-10	1.00E-09	<2.0E-10	<1.0E-09	<1.0E-09

NST = No Sample Taken.

Table 5.24
IRIGARAY AND CHRISTENSEN RANCH ENVIRONMENTAL GROUNDWATER AND SURFACE WATER MONITORING PROGRAMS

	SAMPLE COLLECTION				SAMPLE ANALYSIS	
CONSTITUENT	LOCATION	TYPE	FREQUENCY	METHOD	FREQUENCY	PARAMETER
Regional Groundwater	Christensen Ranch	Grab	Quarterly	Pumped or bailed; downhole submersible pump or windmill	Quarterly	Uranium, Ra-226, Th-230, Pb-210, Po-210, Water levels
	1. Christensen Ranch House No. 3					
	2. Ellendale No. 4					
	3. Willow Corral No. 32					
	4. First Artesian No. 1					
	Irigaray					
	1. Willow No. 2					
Groundwater	Monitor Wells:	BASELINE	4 samples each spaced two weeks apart	Downhole submersible pump	4 samples each spaced two weeks apart	One sample - Assay Suite A[1]
	Ore Zone Perimeter					Three samples Assay Suite B[2]
	Upper Aquifer	Grab				Water levels
	Lower Aquifer					
			Twice per month	Downhole submersible pump	Twice per month	Assay Suite C[3]
	Monitor Wells:	OPERATIONAL MONITORING				Water levels
	Ore Zone Perimeter					
	Upper Aquifer	Grab				

	Lower Aquifer	----------	4 samples each spaced two weeks apart	Downhole submersible pump		
		BASELINE			4 samples each spaced two weeks apart	Two samples - Assay Suite A[1]
	Mine Unit Baseline Wells (For definition of restoration goals)					Two samples - Assay Suite B[2]
		Grab				Water levels
Surface Water	Christensen Ranch	Grab	Quarterly on runoff event basis	Grab	Quarterly	Assay Suite B[2], Th-230, Pb-210, Po-210 and estimated flow rate
	1) CG-05: Upstream Willow Creek					
	2) GS-1: Downstream Willow Creek					
	3. GS-03: 250 yds downstream of PU-3 in Willow Creek					
	Irigaray					
	1. IR-5: Powder River at Irigaray Ranch					
	2. IR-9: Downstream Willow Creek					
	3. IR-14: Upstream Willow Creek					
	4. IR-17: 200 ft. east of Unit 1					

1. Assay Suite A = Ca, Mg, Na, K, CO_3, HCO_3, SO_4, Cl, NH_4 (as N), NO_2 + NO_3 (as N), F, Si, TDS, Conductivity, Total Alkalinity (as $CaCO_3$), pH, Al, As, Ba, Bo, Cd, Cr, Cu, Fe, Pb, Mn, Hg, Mo, Ni, Se, V, Zn, U, Ra-226.
2. Assay Suite B = TDS, SO_4, Cl, Conductivity, Total Alkalinity, pH, As, Se, U, Ra-226
3. Assay Suite C = Excursion parameters: Cl, Conductivity, Total Alkalinity

At Christensen Ranch, for future wellfields (M.U.8 and above) four baseline samples will be collected, with sample events spaced three months apart, encompassing one year. For baseline sampling, a minimum of two casing displacements will be evacuated from each well prior to sample collection. Samples will be analyzed for one full suite analysis and three short list analyses (see Table 5.24).

Mine Unit Baseline Water Quality

Baseline water quality is established for the mineralized zones to be mined within the host sandstone. As a basis for determining the groundwater quality restoration goals for a particular mine unit, COGEMA collects samples from representative injection or production wells at a density of one well for every three acres of wellfield pattern area. The wells chosen for baseline are evenly distributed over the wellfield area. Baseline water quality is established by collecting four quarterly samples over one year from each well and analyzing the samples for two full suite analyses and two short list analyses, as identified in Table 5.24. Water quality baseline sampling procedures were the same as those discussed for monitor wells.

Baseline water quality for a particular mine unit is established by combining the sample results from all mineralized zone wells within that mine unit and calculating an arithmetic average. Outliers are removed from the data base as described in the following section. The overall average baseline water quality results for a mine unit are used to define the restoration water quality target values for that particular mine unit.

Removal of Outliers from the Water Quality Data Base

Prior to any calculations for baseline mean, other statistics, or upper control limits, the water quality data base will be screened for outliers. Outliers are anomalously high or low values relative to the other values, which can compromise a data base. Outliers are typically caused by one of the following conditions:

- Transcription errors, either in the laboratory or in-house
- Analytical errors (multiplication errors, etc.)
- Incorrect units of measurements
- Sampling error

However, it is possible that the outlier is a true value, being caused by natural water quality variability, or geologic differences within the sampled aquifer. For this reason, the following procedures will be followed when analyzing the water quality data base for outliers:

- The data will first be screened visually, to identify obvious outliers, if present.
- The data will then be screened using a statistical analysis. COGEMA has used, and will continue to use, the tolerance-limit formula (Loftis, et al., 1987) as its method for outlier screening. This method is currently approved in the

WDEQ Permit to Mine, NRC license, and is recommended in the WDEQ Guideline No. 4 for In Situ Mining. The tolerance-limit method used by COGEMA is as follows:

$X \pm Ks$ Where:

X = sample mean

K = tolerance factor,
corresponding to
$\gamma = 0.99$ and
$\alpha = 0.001$

s = sample standard deviation

Once an outlier is identified, either by the visual screening, or by the tolerance-limit method, reasons for the outlier will be investigated. The analyzing laboratory will be contacted to see if the outlier could be a result of a calculation error, transcription error, or unit of measurement error. Errors in sampling will also be investigated. Hopefully, the error will be detected and the data point corrected. In a case where no explanation for the outlier can be reasonably found, the data point will be excluded if it fails the tolerance limit statistical screening.

The tolerance limit screening method is also useful with identifying separate water quality populations, such as found on occasion in the Christensen Ranch shallow monitor zones. In this case, separate upper control limits are set for these particular wells instead of the group upper control limit.

Operational Monitoring

Operational monitoring at both Irigaray and Christensen Ranch in the past has consisted of sampling the monitor wells on a twice per month basis and analyzing the samples for the excursion indicators chloride, conductivity and total alkalinity. Additionally, trend wells are sampled and analyzed at the operator's discretion. Typically, trend wells are sampled every two weeks, as monitor wells are, and analyzed for chloride. A discussion of the upper control limit calculations, as well as excursion verification procedures follows.

Proposed Program

Table 5.24 provides the groundwater sampling program proposed for ongoing mining

operations at Irigaray and Christensen Ranch, including baseline and operational monitoring. The program is consistent with the current Christensen Ranch program, which has worked well in the past. COGEMA proposes to continue using one well per three acres of installed pattern area, which is consistent with the WDEQ Guideline No. 4 for In Situ Mining. A density of ore zone baseline wells other than one well per three acres of installed pattern area may be proposed to LQD for an individual wellfield, but will require LQD approval prior to use.

5.8.2.3 Upper Control Limits and Excursion Monitoring

After baseline water quality was established for the monitor wells for a particular mine unit, upper control limits (UCLs) were set for certain chemical constituents which would be indicative of a migration of lixiviant from the well field. The constituents chosen for indicators of lixiviant migration at both Irigaray and Christensen Ranch, and for which UCLs were set, have been chloride, conductivity and total alkalinity. Chloride was chosen due to its low natural levels in the native groundwater and because chloride is introduced into the lixiviant from the ion exchange process (uranium is exchanged for chloride on the ion exchange resin). Chloride is also a very mobile constituent in the groundwater and will show up very quickly in the case of a lixiviant migration to a monitor well. Conductivity was chosen because it is an excellent general indicator of overall groundwater quality. Total alkalinity concentrations may be affected during an excursion as bicarbonate is the major constituent added to the lixiviant.

The following method has been followed for calculating upper control limits at Christensen Ranch:

- For each mine unit, the results from the baseline samples from all monitor wells in the same stratigraphic horizon were combined as a group and averaged arithmetically (sample mean). Average baseline concentrations were established separately for each stratigraphic monitor zone (perimeter ore zone, interior overlying and underlying aquifers). The average baseline values were then used to calculate upper control limits for the monitor zones associated with that mine unit. In other words, each monitor well within a particular stratigraphic zone has the same upper control limit concentrations.

- The above method of calculating group upper control limits was chosen for the Christensen Ranch mining areas due to the relatively small variability seen in baseline water quality results obtained in the Willow Creek R & D program and the Christensen baseline program especially in chloride and conductivity levels. Prior to upper control limit calculation, outliers were removed from the data set by using visual screening, and the tolerance limit method discussed above. Any data point which did not fall within the tolerance limits set by the test was considered suspect and was eliminated

for use in upper control limit calculation if no explanation could be found for the anomalous value.

If all four baseline sample results from an individual well would be eliminated by the tolerance limit process, the well would have its own set of UCLs based upon the average results of the four samples.

Upper control limits were then calculated as follows:

Chloride	-	Baseline mean plus 15 mg/l, or baseline mean plus five (5) standard deviations, whichever is greater
Conductivity	-	Baseline mean plus five (5) standard deviations
Total Alkalinity	-	Baseline mean plus five (5) standard deviations

After operations in Mine Unit 3 and 4 it became obvious that the upper control limit calculation for chloride (baseline mean plus five standard deviations) provided an upper control limit that was too restrictive, due to the relatively small variability in baseline chloride values. For Mine Unit 5, the chloride upper control limit was calculated as the baseline mean plus 15 mg/l. Control limits for conductivity and total alkalinity remained the same. This practice was approved by both the WDEQ and NRC for Mine Units 5 and 6.

Trend well action limits are set the same as for monitor well upper control limits.

The above described method of setting upper control limits will be continued for future Christensen Ranch mine units.

Christensen Ranch Mine Unit 7 monitor wells and their respective proposed upper control limits were proposed in the Mine Unit 7 wellfield baseline data package which was submitted to LQD on June 8, 2007. Initial review comments were received from LQD in a letter dated November 9, 2007. COGEMA's response to those comments is pending.

Excursion Verification and Corrective Action

During routine sampling, if two of the three UCL values are exceeded in a monitor well, the well is re-sampled within two days of the first sample and analyzed for the excursion indicators. If the second sample does not exceed two out of three UCLs, a third sample is taken within two days from the second sample. If neither the second or third sample results exceed two of the three UCLs, the first sample is considered in error.

If the second or third sample verify an exceedance of two out of the three UCLs, the well in question is placed on excursion status. Upon verification of the excursion, the WDEQ and USNRC are notified by telephone and e-mail within 24 hours and are notified in writing within 7 days.

When an excursion is verified, the following methods of corrective action are instituted (not necessarily in the order given; response is dependent upon the circumstances):

- A preliminary investigation is completed to determine the probable cause.
- Production and/or injection rates in the vicinity of the monitor well are adjusted as necessary to increase the net over-recovery, thus forming a hydraulic gradient toward the production zone.
- Individual injection wells are pumped to enhance recovery of mining solutions.
- Injection into the well field area adjacent to the monitor well is suspended. Recovery operations continue, thus increasing the overall bleed rate and the recovery of well field solutions.

In addition to the above corrective actions, sampling frequency of the monitor well on excursion status is increased to weekly. Uranium and pH are added to the routine analytical list of chloride, conductivity and total alkalinity. An excursion is considered concluded when the concentrations of excursion indicators do not exceed the criteria defining an excursion for three consecutive one-week samples.

Proposed Excursion Verification and Monitoring Program

The proposed excursion verification and monitoring program for the Christensen Ranch site is the same as noted above. The upper control limits for all monitor wells at the Christensen Ranch site will be calculated as follows:

Chloride -	baseline mean plus 15 mg/l, or baseline mean plus 5 standard deviations, whichever is greater
Total Alkalinity -	baseline mean plus 5 standard deviations

Conductivity - baseline mean plus 5 standard deviations

Group upper control limits for each stratigraphic unit within each mine unit will continue to be calculated as well. The method for removal of outliers from the water quality data base will also be the same as noted above.

5.8.2.4 Surface Water Monitoring

Program Description and Historic Results

The pre-operational water quality monitoring program assessed water quality and quantity for the Willow Creek drainage and tributaries within and immediately adjacent to the Irigaray and Christensen Ranch boundaries. During operations, COGEMA sampled four surface water locations at Irigaray and three at Christensen Ranch. Quarterly grab samples were taken from upstream (IR-14) and downstream (IR-9) Willow Creek monitoring stations at Irigaray. Additionally, a sample was collected quarterly at station IR-17, adjacent to the operating well fields. Annually, samples were also collected from the Powder River at the Irigaray Ranch, downstream from the confluence with Willow Creek (IR-5). At Christensen, samples were collected downstream from the well field operations (GS-01), upstream from the operations (CG-05) and adjacent to Mine Unit 3 (GS-03). Samples from all locations except IR-5 were obtained quarterly on a runoff event basis as Willow Creek is an ephemeral stream. IR-5 is obtained annually. Surface monitoring results are submitted in the semi-annual activity and monitoring reports submitted to the WDEQ and NRC. A summary of the post-1994 regional surface water monitoring results is given in Table 5.25

Proposed Surface Water Monitoring Program

No changes to the current surface water monitoring program are recommended. A summary of the proposed program is given in Table 5.24.

TABLE 5.25
REGIONAL SURFACE WATER MONITORING RESULTS

Location	Sample Date	U (μCi/ml)	Ra_{226} (μCi/ml)	Th_{230} (μCi/ml)	Pb_{210} (μCi/ml)	Po_{210} (μCi/ml)
IR-5	6/29/1995	5.80E-10	3.00E-10	<2.0E-10	1.10E-09	<1.0E-09
	7/16/1996	8.80E-09	4.20E-10	1.00E-09	<1.6E-09	3.40E-10
Irigaray - Powder	7/16/1997	5.00E-09	1.30E-09	<1.7E-09	<6.8E-09	<2.2E-09
River at the Irigaray	4/29/1998	4.00E-09	1.90E-09	<2.0E-10	<1.0E-09	<1.0E-09
Ranch	2/25/1999	6.40E-09	1.10E-09	<2.0E-10	<1.0E-09	<1.0E-09
	3/2/2000	2.98E-09	<2.0E-10	<2.0E-10	<1.0E-09	<1.0E-09
	4/25/2001	6.00E-09	<2.0E-10	<2.0E-10	<1.0E-09	1.40E-09
	6/18/2002	8.03E-09	6.00E-10	1.30E-09	<2.7E-09	<2.7E-09
	5/28/2003	3.90E-09	4.00E-09	<2.0E-10	<1.0E-09	<1.0E-09
	7/21/2004	8.00E-09	3.00E-10	<2.0E-10	<1.0E-09	<1.0E-09
	7/11/2005	8.60E-06	7.00E-07	<2.0E-10	<1.0E-09	<1.0E-09
	6/21/2006	7.50E-09	<2.0E-10	<2.0E-10	<1.0E-09	<1.0E-09
IR-5	7/3/2007	5.40E-09	<2.0E-10	<2.0E-10	<1.0E-09	<1.0E-09
IR-9	2/23/1995	1.70E-08	<2.0E-10	<2.0E-10	<1.0E-09	<1.0E-09
	5/24/1995	2.30E-08	2.30E-09	1.33E-08	2.80E-09	1.80E-09
Irigaray -	2/28/1996	2.44E-08	<9.0E-10	<1.3E-09	<6.3E-09	<1.9E-09
Downstream	5/30/1996	4.54E-08	<1.0E-09	<1.0E-09	<6.4E-09	<3.1E-09
Willow Creek	5/20/1997	3.50E-08	<1.0E-09	<1.1E-09	<8.7E-09	<1.6E-09
	3/11/1998	4.90E-08	<2.0E-10	<2.0E-10	<1.0E-09	<1.0E-09
	4/29/1998	4.08E-08	<2.0E-10	<2.0E-10	<1.0E-09	No Data
	7/23/1998	3.80E-09	4.00E-10	<2.0E-09	<1.0E-09	2.40E-09
	11/19/1998	3.30E-08	<2.0E-10	<2.0E-10	<1.0E-09	<1.0E-09
	2/4/1999	4.10E-08	<2.0E-10	<2.0E-10	<1.0E-09	2.40E-09
	5/7/1999	3.90E-09	<2.0E-10	<2.0E-10	<1.0E-09	<1.0E-09
	8/6/1999	4.51E-08	<2.0E-10	<2.0E-10	<1.0E-09	<1.0E-09
	10/8/1999	2.40E-08	4.00E-10	<2.0E-10	<1.0E-09	<1.0E-09
	3/2/2000	3.70E-08	<2.0E-10	<2.0E-10	<1.0E-09	<1.0E-09
	5/24/2000	3.95E-08	<2.0E-10	<2.0E-10	<1.0E-09	<1.0E-09
	7/27/2000	1.70E-07	2.50E-09	<2.0E-10	<1.0E-09	<1.0E-09
	10/31/2000	4.20E-09	5.00E-10	<2.0E-10	<1.0E-09	<1.0E-09
	7/12/2001	1.41E-08	4.00E-10	<2.0E-10	<1.0E-09	<1.0E-09
	2002	NO FLOW	----	----	----	----
	2003	NO FLOW	----	----	----	----
	2004	NO FLOW	----	----	----	----
	2005	NO FLOW	----	----	----	----
	2006	NO FLOW	----	----	----	----
IR-9	2007	NO FLOW	----	----	----	----
IR-14	2/23/1995	1.76E-08	2.00E-10	<2.0E-10	<1.0E-09	<1.0E-09

	5/24/1995	1.90E-08	1.00E-09	1.20E-09	2.20E-09	1.00E-09
Irigaray -	8/15/1995	1.80E-08	3.00E-10	<2.0E-10	3.50E-09	<1.0E-09
Upstream	2/28/1996	3.00E-08	<9.0E-10	<2.0E-10	<6.3E-09	<3.0E-09
Willow Creek	5/30/1996	4.27E-08	<1.0E-09	1.50E-09	<6.4E-09	<3.8E-09
	8/21/1996	1.63E-08	1.50E-09	<9.0E-10	<6.8E-09	<3.5E-09
	11/13/1996	1.15E-08	<1.1E-09	<4.7E-10	<5.8E-09	<3.6E-09
	1/29/1997	3.10E-07	1.90E-09	2.00E-09	<5.3E-09	<2.8E-09
	5/20/1997	1.90E-08	<1.0E-09	<7.0E-10	<8.7E-09	<1.6E-09
	7/16/1997	1.40E-08	6.00E-10	<1.9E-09	<6.8E-09	<2.6E-09
	10/16/1997	2.20E-08	<2.0E-10	<2.0E-10	<1.0E-09	5.50E-09
	3/12/1998	5.00E-08	<2.0E-10	<2.0E-10	<1.0E-09	<1.0E-09
	4/29/1998	2.82E-08	<2.0E-10	<2.0E-10	2.03E-08	<1.0E-09
	7/23/1998	1.70E-08	9.00E-10	<2.0E-09	<1.0E-09	<1.0E-09
	11/19/1998	3.00E-08	<2.0E-10	<2.0E-10	<1.0E-10	<1.0E-10
IR-14	2/4/1999	2.60E-08	<2.0E-10	<2.0E-10	<1.0E-09	<1.0E-09
	5/7/1999	3.20E-08	<2.0E-10	<2.0E-10	<1.0E-10	<1.0E-10
	8/6/1999	1.24E-08	<2.0E-10	<2.0E-10	<1.0E-09	<1.0E-09
IR-14	10/8/1999	1.20E-08	<2.0E-10	<2.0E-10	<1.0E-10	<1.0E-10
	3/2/2000	2.91E-09	<2.0E-10	<2.0E-10	<1.0E-09	<1.0E-09
Irigaray -	5/24/2000	8.60E-09	<2.0E-10	<2.0E-10	<1.0E-10	<1.0E-10
Upstream	7/27/2000	1.70E-08	2.20E-09	<2.0E-10	<1.0E-09	<1.0E-09
Willow Creek	10/31/2000	3.50E-08	8.00E-10	<2.0E-10	<1.0E-09	<1.0E-09
	7/12/2001	4.10E-09	4.00E-10	<2.0E-10	<1.0E-09	3.30E-09
	10/10/2001	1.15E-08	<2.0E-10	<2.0E-10	<2.7E-09	<1.0E-09
	6/18/2002	3.00E-08	<2.0E-10	<2.0E-10	<2.7E-09	<2.7E-09
	5/28/2003	2.81E-08	<2.0E-10	<2.0E-10	<1.0E-09	<1.0E-09
IR-14	7/21/2004	1.93E-08	<2.0E-10	<2.0E-10	<1.0E-09	<1.0E-09
IR-17	2/23/1995	2.51E-08	<2.0E-10	<2.0E-10	<1.0E-09	<1.0E-09
	5/24/1995	1.63E-08	2.20E-09	2.00E-10	1.50E-09	1.00E-09
Irigaray - 200' East	11/17/1995	2.10E-08	N/D	<2.0E-10	<1.0E-09	<1.0E-09
of Unit 1	2/28/1996	2.23E-08	<9.0E-10	<1.4E-09	<6.3E-09	<2.3E-09
	5/30/1996	3.79E-08	<1.0E-09	<1.0E-09	<6.4E-09	<3.6E-09
	8/21/1996	1.83E-08	<1.1E-09	<1.0E-09	<6.8E-09	<5.4E-09
	11/13/1996	1.83E-08	<1.1E-09	<5.1E-10	<5.8E-09	<3.0E-09
	1/29/1997	2.00E-08	<8.0E-10	<7.0E-10	<5.3E-09	<2.6E-09
	5/20/1997	1.80E-08	<1.0E-09	<1.5E-09	<8.7E-09	<2.9E-09
	7/16/1997	1.30E-08	<6.0E-10	<1.3E-09	6.80E-09	<1.8E-09
	10/16/1997	1.80E-08	<2.0E-10	<2.0E-10	<1.0E-09	<1.0E-09
	3/12/1998	2.34E-08	<2.0E-10	<2.0E-10	<1.0E-09	<1.0E-09
	4/29/1998	2.14E-08	<2.0E-10	<2.0E-10	5.10E-09	<1.0E-09
	7/23/1998	1.50E-08	<2.0E-09	<2.0E-09	<1.0E-09	3.10E-09
	11/19/1998	2.30E-08	<2.0E-10	<2.0E-10	<1.0E-10	<1.0E-10
	2/4/1999	1.90E-08	<2.0E-10	<2.0E-10	<1.0E-09	<1.0E-09
	5/7/1999	2.80E-08	<2.0E-10	<2.0E-10	<1.0E-10	<1.0E-10
	8/6/1999	1.79E-08	<2.0E-10	<2.0E-10	<1.0E-09	<1.0E-09

	10/8/1999	2.10E-08	<2.0E-10	<2.0E-10	<1.0E-10	<1.0E-10
	3/2/2000	1.85E-08	<2.0E-10	<2.0E-10	<1.0E-09	<1.0E-09
	5/24/2000	2.30E-08	<2.0E-10	<2.0E-10	<1.0E-10	<1.0E-10
	7/27/2000	2.00E-09	1.80E-09	<2.0E-10	<1.0E-09	<1.0E-09
	10/31/2000	2.20E-08	3.50E-09	<2.0E-10	<1.0E-09	<1.0E-09
	4/25/2001	2.37E-08	<2.0E-10	<2.0E-10	<1.0E-09	<1.0E-09
	7/12/2001	5.42E-09	3.00E-10	<2.0E-10	<1.0E-09	2.38E-08
	10/10/2001	1.76E-08	<2.0E-10	<2.0E-10	<2.7E-09	<1.0E-09
	6/18/2002	2.80E-08	<2.0E-10	1.10E-09	<2.7E-09	3.60E-09
	5/28/2003	2.03E-08	<2.0E-10	<2.0E-10	<1.0E-09	<1.0E-09
	7/21/2004	2.01E-08	<2.0E-10	<2.0E-10	<1.0E-09	<1.0E-09
	7/11/2005	1.40E-08	<2.0E-10	<2.0E-10	4.80E-09	<1.0E-09
	2006	NO FLOW	----	----	----	----
IR-17	7/3/2007	1.10E-08	<2.0E-10	<2.0E-10	<1.0E-09	<1.0E-09
GS-01	2/23/1995	4.00E-08	6.00E-09	<2.0E-10	1.10E-09	<1.0E-09
	5/24/1995	4.30E-08	1.00E-09	4.00E-10	3.50E-09	8.00E-10
Christensen -	11/17/1995	2.64E-08	2.00E-10	1.00E-09	No Data	2.00E-10
Downstream	2/28/1996	5.35E-08	<9.0E-10	<1.4E-09	<6.3E-09	<1.7E-09
Willow Creek	5/30/1996	4.10E-08	2.20E-09	1.40E-09	<6.4E-09	<4.3E-09
	8/21/1996	2.98E-08	<1.1E-09	<1.6E-09	<6.8E-09	<3.8E-09
	11/13/1996	2.78E-08	<1.1E-09	<5.1E-10	6.30E-09	<3.1E-09
	1/29/1997	4.80E-07	1.20E-09	<1.4E-09	<5.3E-09	<2.7E-09
	5/20/1997	7.20E-08	1.10E-09	2.30E-09	<8.7E-09	<2.0E-09
	7/16/1997	4.00E-07	<6.0E-10	2.00E-09	<6.8E-09	<1.1E-08
	10/16/1997	2.10E-07	<2.0E-10	<2.0E-10	1.00E-09	3.20E-09
GS-01	2/4/1998	1.63E-07	<2.0E-10	<2.0E-10	<1.0E-09	<1.0E-09
	4/29/1998	9.88E-08	<2.0E-10	<2.0E-10	<1.0E-09	<1.0E-09
GS-01	7/23/1998	4.90E-08	<2.0E-09	<2.0E-09	<1.0E-09	<1.0E-09
	11/19/1998	1.00E-07	<2.0E-10	<2.0E-10	<1.0E-10	3.40E-09
Christensen -	2/25/1999	9.10E-08	1.00E-09	<2.0E-10	<1.0E-09	<1.0E-09
Downstream	5/7/1999	6.80E-08	<2.0E-10	<2.0E-10	<1.0E-10	<1.0E-10
Willow Creek	8/6/1999	4.30E-08	<2.0E-10	<2.0E-10	<1.0E-09	<1.0E-09
	10/8/1999	1.20E-07	4.00E-10	<2.0E-10	<1.0E-10	<1.0E-10
	1/26/2000	6.23E-09	<2.0E-10	<2.0E-10	<1.0E-09	<1.0E-09
	5/24/2000	1.44E-07	<2.0E-10	<2.0E-10	<1.0E-10	<1.0E-10
	7/27/2000	2.30E-08	1.60E-09	<2.0E-10	<1.0E-09	4.70E-09
	10/31/2000	4.20E-08	<0.2E-09	<2.0E-10	<1.0E-09	<1.0E-09
	1/29/2001	1.32E-07	1.40E-09	<2.0E-10	<1.0E-09	<1.0E-09
	4/25/2001	3.64E-08	<2.0E-10	<2.0E-10	<1.0E-09	<1.0E-09
	7/12/2001	1.29E-08	5.00E-10	<2.0E-10	<1.0E-09	<1.0E-09
	6/18/2002	1.10E-07	7.00E-10	<2.0E-10	<2.7E-09	<2.7E-09
	5/28/2003	4.18E-08	<5.0E-10	<2.0E-10	<1.0E-09	<1.0E-09
	2004	NO FLOW	----	----	----	----
	2005	NO FLOW	----	----	----	----
	2006	NO FLOW	----	----	----	----

GS-01	2007	NO FLOW	----	----	----	----
GS-03	2/23/1995	2.64E-08	2.00E-10	<2.0E-10	<1.0E-09	<1.0E-09
	5/24/1995	5.48E-08	2.20E-09	1.00E-09	1.00E-09	5.00E-10
Christensen -	8/15/1995	4.47E-08	2.00E-10	<2.0E-10	3.20E-09	<1.0E-09
Willow Creek	11/17/1995	6.57E-08	3.00E-10	1.30E-09	<1.0E-09	2.00E-10
250 yds. Down-	2/28/1996	6.90E-08	<9.0E-10	<1.3E-09	<6.3E-09	<1.9E-09
stream from MU-3	5/30/1996	3.59E-08	2.00E-09	<4.0E-10	<6.4E-09	<4.6E-09
	8/21/1996	4.27E-08	<1.1E-09	<8.0E-10	<6.8E-09	<3.7E-09
	11/13/1996	2.30E-08	<1.1E-09	<5.4E-10	<5.8E-09	<3.1E-09
	1/29/1997	5.80E-07	<8.0E-10	1.50E-09	8.30E-09	<2.3E-09
	5/20/1997	3.70E-07	<1.0E-09	<9.0E-10	<8.7E-09	<2.5E-09
	7/16/1997	4.60E-07	8.00E-10	<1.1E-09	<6.8E-09	<2.1E-09
	10/16/1997	1.80E-07	7.00E-10	<2.0E-10	<1.0E-09	1.90E-09
	3/11/1998	2.92E-07	<2.0E-10	<2.0E-10	<1.0E-09	<1.0E-09
	4/29/1998	9.18E-08	<2.0E-10	<2.0E-10	<1.0E-09	3.10E-09
	7/23/1998	4.90E-07	<2.0E-10	<2.0E-10	1.30E-08	<2.3E-09
	11/19/1998	9.60E-08	<2.0E-10	<2.0E-10	<1.0E-10	<1.0E-10
	2/4/1999	2.40E-07	<2.0E-10	<2.0E-10	<1.0E-09	<1.0E-09
	5/7/1999	4.70E-08	<2.0E-10	<2.0E-10	<1.0E-10	<1.0E-10
	8/6/1999	9.80E-08	<2.0E-10	<2.0E-10	<1.0E-09	<1.0E-09
	10/8/1999	1.60E-07	<2.0E-10	<2.0E-10	<1.0E-10	<1.0E-10
	1/26/2000	2.21E-07	<2.0E-10	<2.0E-10	<1.0E-09	<1.0E-09
	5/24/2000	1.22E-07	<2.0E-10	<2.0E-10	<1.0E-10	<1.0E-10
	7/27/2000	1.50E-08	6.00E-10	<2.0E-10	<1.0E-09	<1.0E-09
	10/31/2000	1.60E-08	<2.0E-10	<2.0E-10	<1.0E-09	<1.0E-09
	1/29/2001	2.04E-08	1.20E-09	<2.0E-10	1.89E-08	<1.0E-09
	4/25/2001	1.57E-08	<2.0E-10	<2.0E-10	<1.0E-09	<1.0E-09
	7/12/2001	6.80E-09	<2.0E-10	<2.0E-10	<1.0E-09	2.70E-09
	10/10/2001	4.70E-09	<2.0E-10	<2.0E-10	<1.0E-09	<1.0E-09
	6/18/2002	1.50E-08	7.00E-10	<2.0E-10	<2.7E-09	<2.7E-09
	5/28/2003	4.93E-08	<6.0E-10	<2.0E-10	<1.0E-09	<1.0E-09
	2004	NO FLOW	----	----	----	----
	2005	NO FLOW	----	----	----	----
	2006	NO FLOW	----	----	----	----
GS-03	2007	NO FLOW	----	----	----	----
CG-05	5/24/1995	1.22E-08	1.30E-09	1.20E-09	4.50E-09	1.00E-09
	2/28/1996	2.23E-08	<9.0E-10	<1.4E-09	<6.3E-09	<2.4E-09
Christensen -	5/30/1996	2.57E-07	<1.0E-09	<1.0E-09	<6.4E-09	<2.7E-09
Willow Creek	8/21/1996	1.63E-08	<1.1E-09	<9.0E-10	<6.8E-09	<5.0E-09
Upstream	11/13/1996	1.76E-08	<1.1E-09	<9.6E-10	6.90E-09	<2.6E-09
	5/20/1997	1.20E-08	<1.0E-09	<1.7E-09	<8.7E-09	<1.7E-09
	10/16/1997	2.00E-08	<2.0E-10	<2.0E-10	<1.0E-09	<1.0E-09
	2/4/1998	2.60E-08	<2.0E-10	<2.0E-10	<1.0E-09	<1.0E-09

	4/29/1998	1.31E-08	<2.0E-10	<2.0E-10	8.50E-09	2.10E-09
	2/5/1999	1.70E-08	6.00E-10	4.00E-10	<1.0E-09	<1.0E-09
	5/7/1999	2.10E-08	<2.0E-10	<2.0E-10	<1.0E-10	<1.0E-10
	8/6/1999	2.04E-08	<2.0E-10	<2.0E-10	<1.0E-09	<1.0E-09
	10/8/1999	1.20E-07	4.00E-10	<2.0E-10	<1.0E-09	2.10E-08
	1/26/2000	3.18E-08	<2.0E-10	<2.0E-10	<1.0E-09	<1.0E-09
	5/24/2000	1.36E-08	<2.0E-10	<2.0E-10	<1.0E-09	<1.0E-09
	7/27/2000	2.10E-08	8.00E-10	<2.0E-10	<1.0E-09	<1.0E-09
	10/31/2000	6.70E-08	3.00E-10	<2.0E-10	<1.0E-09	<1.0E-09
	1/29/2001	5.33E-08	1.10E-09	<2.0E-10	<1.0E-09	<1.0E-09
	4/25/2001	2.24E-08	<2.0E-10	<2.0E-10	<1.0E-09	<1.0E-09
	7/12/2001	5.40E-09	<2.0E-10	<2.0E-10	<1.0E-09	<1.0E-09
	10/10/2001	6.57E-08	<2.0E-10	<2.0E-10	<1.0E-09	<1.0E-09
	6/18/2002	6.80E-09	5.00E-10	<2.0E-10	<2.7E-09	<2.7E-09
	5/28/2003	9.30E-09	<3.0E-10	<2.0E-10	<1.0E-09	<1.0E-09
	7/21/2004	3.30E-09	<2.0E-10	<2.0E-10	<1.0E-09	<1.0E-09
	7/11/2005	4.00E-09	8.00E-10	<2.0E-10	<2.7E-09	<1.0E-09
	6/21/2006	4.10E-09	<2.0E-10	<2.0E-10	<1.0E-09	<1.0E-09
CG-05	2007	NO FLOW	----	----	----	----

Note: Gaps in data due to a lack of surface water flow.

5.8.3 EVAPORATION POND LEAK DETECTION MONITORING

Ponds A, C, D, E, and RA at Irigaray have been decommissioned to the point of removing the accumulated bottom sludges, liners, leak detections systems, and residual contaminated soil under the liners. The decommissioned pond basins remain intact and available for potential reconstruction as lined systems. The remaining brine evaporation and restoration ponds at Irigaray and Christensen Ranch are lined and equipped with leak detection systems. During operations, the leak detection standpipes are checked for evidence of leakage on a weekly frequency. Visual inspection of the pond embankments, fences and liners and the measurement of pond freeboard are performed on the same frequency. Anytime six (6) inches or more of fluid is detected in a leak detection system standpipe, a sample of the solution is obtained and analyzed for chloride, conductivity, pH and uranium. Should the analyses indicate that the pond is leaking (by comparison to chemical analyses of pond water), the following actions are taken:

- The WDEQ and USNRC are notified by telephone within 48 hours of leak verification.

- The level of the leaking pond is lowered by transferring its contents into an adjacent pond, or a pond within the pond system. While lowering the water level in the pond, inspections of the liner are made to determine the cause and location of the leakage. The area of investigation first centers around the pond area specific for the particular standpipe which contains fluid. Each lined pond has six leak detection standpipes. Therefore, the area of leakage is readily identifiable.

- Once the source of the leakage is found, the liner is repaired and water is reintroduced to the pond to check the adequacy of the repair. Water in the leak detection standpipes is monitored on a daily basis while refilling the pond.

- A written report is submitted to the WDEQ and USNRC within 30 days of correcting the leakage. The report includes analytical data and describes the cause of the leakage, corrective actions taken and the results of those actions.

Because the permeate storage ponds are unlined and will contain water which meets NPDES surface discharge criteria, leak detection systems are not installed. Water quality in the permeate storage ponds is sampled on a quarterly frequency and analyzed for uranium, radium-226 (dissolved), pH, TDS, chloride, conductivity and zinc. Water quality in the brine evaporation ponds is sampled on a quarterly basis and analyzed for uranium, radium-226, pH, TDS, chloride, conductivity, sulfate, ammonium (NH4), nitrate (NO3) and

zinc. Results of the quarterly assays are reported to the WDEQ and NRC in the semi-annual reports.

COGEMA will maintain the same evaporation pond leak detection monitoring program, as is currently in place, for future operations.

5.9 QUALITY ASSURANCE PROGRAM

A quality assurance program has been in place at Irigaray and Christensen Ranch for all relevant operational monitoring and analytical procedures. The objective of the program has been to identify any deficiencies in the sampling techniques and measurement processes so that corrective action could be taken and to obtain a level of confidence in the results of the monitoring programs. The QA program provided assurance to both regulatory agencies and the public that the monitoring results were valid.

The QA program addresses the following:

- Formal delineation of organizational structure and management responsibilities. Responsibility for both review/approval of written procedures and monitoring data/reports is provided.

- Minimum qualifications and training programs for individuals performing radiological monitoring and those individuals associated with the QA program.

- Written procedures for QA activities. These procedures include activities involving sample collection, sample analysis, calibration of instrumentation, calculation techniques, data evaluation, and data reporting.

- Quality control (QC) in the laboratory. Procedures cover statistical data evaluation, instrument calibration, duplicate sample programs and spike sample programs. Outside laboratory QA/QC programs are included.

- Provisions for periodic management audits to verify that the QA program is effectively implemented, to verify compliance with applicable rules, regulations and license requirements, and to protect employees by maintaining effluent releases and exposures ALARA.

The Standard Operating Procedures developed by COGEMA are a critical step to insuring that quality assurance objectives are met. Current SOP's exist for a variety of areas, including but not limited to:

1. Environmental monitoring procedures.

2. Testing procedures.
3. Exposure procedures.
4. Equipment operation and maintenance procedures.
5. Employee health and safety procedures.
6. Incident response procedures.
7. Laboratory procedures.

Routine monitor well samples, pond leak samples, and some radiological survey samples are analyzed at the Christensen Ranch site laboratory. The quality assurance plan for this laboratory is detailed in Standard Operating Procedure ENV-22, "Laboratory Quality Assurance Program, Irigaray Mine Site."

5.10 REPORTING PROCEDURES

5.10.1 ROUTINE REPORTS

Routine reports and data submittals to the WDEQ and USNRC are described as follows.

5.10.1.1 Semi-Annual Report

Pursuant to 10 CFR 40, Section 40.64, a report will be submitted to the USNRC on a semi-annual basis outlining the results of the effluent and environmental monitoring programs described in Sections 5.8 and any other information required by license condition.

A report will also be submitted to the WDEQ on a semi-annual basis that will address the results of the operational groundwater monitoring program (monitor and trend well sample analyses and water levels in tabular form), summaries of the well integrity testing program, and an accounting of the total gallons injected and recovered. Normally, the WDEQ semi-annual report will be combined with the USNRC semi-annual report.

5.10.1.2 Annual Report

As required by W.S. 35-11-411, COGEMA will submit an annual report to the WDEQ. The report shall contain the following information:

1. Maps showing locations of all wells installed in conjunction with the mining activity and areas where groundwater restoration has been achieved or is taking place or planned to take place within the next year. The map also shows areas where mining is expected to commence during the next year.

2. The total quantity of recovery fluid injected and the total quantity of recovery fluid extracted during the annual reporting period for each mine unit including a description of how these quantities were determined.

3. Water quality monitoring program results including a map and description of excursions, if any occurred during the period, their location and extent.

4. An updated potentiometric surface map for all aquifers that are or may be affected by the mining operation.

In addition to the above information, COGEMA will use the annual report as the mechanism to update or revise the mine plan as operations progress. The annual report will contain the bond estimate for surface and aquifer restoration for the current and following year's operations. The USNRC will receive a copy of the WDEQ annual report.

An annual report will also be submitted to the USNRC which outlines any changes made to the operations and approved by the SERP, under the performance based license, during the past year. The annual report will include a summary of the changes and recommendations approved by the SERP, as well as copies of any pages of this application which are revised by the SERP. The annual report may be included with semi-annual report, or may be combined with the WDEQ annual report.

5.10.1.3 Mine Unit Data Submittals

Prior to the commencement of lixiviant injection into a new mine unit, certain baseline information will be collected. This information will be summarized in a baseline data package for submittal to the WDEQ for their approval of operations in the new mine unit. The package will not formally be submitted to the USNRC under the new performance based license, but will instead be evaluated by the SERP and will be available for review during an inspection.

COGEMA will establish baseline groundwater quality for each mine unit as previously discussed. Baseline data collection for each mine unit will begin as soon as the boundaries of a new unit are defined and monitor wells are installed. The mine unit baseline water quality will be submitted to the WDEQ as supplemental information to the original mine permit.

The data package submitted to the WDEQ for a particular mine unit will include:

1. Baseline water quality for the ore zone monitor wells, the overlying aquifer monitor wells, underlying aquifer monitor wells and the ore zone itself within the well field boundaries.

2. Results of a pumping test to demonstrate that the perimeter ore zone monitor wells are in communication with the mine unit ore zone wells.

3. Potentiometric surface maps for the ore zone, the overlying aquifer and the underlying aquifer as developed from pre-mining water levels.

4. Monitor well upper control limits.

5. Location and completion details for monitor wells and ore zone baseline water quality wells.

6. Average mine unit baseline water quality and proposed restoration target values.

7. If a mine unit is in an area where no previous baseline hydrologic data is available, the results of a multi-well aquifer test will be submitted. The test will define the aquifer properties within the affected area including average and directional transmissivity, permeabilities, hydrologic boundary conditions, and vertical confinement of the mining zone. An analysis of whether an excursion can be retrieved from a monitor well within the 60-day regulatory timeframe will be conducted, if the aquifer properties are significantly different than others identified in previous mine units.

The SERP review procedure for new mine units will involve the evaluation of the following information to assure that:

- The new mine unit is within the licensed area;
- Wells have been constructed pursuant to the application and applicable Standard Operating Procedures, including the spacing and density requirements for monitor wells;
- Mechanical integrity tests have been properly conducted for each operational well in the new mine unit;
- Baseline water quality has been properly established for all monitor and restoration wells;
- Upper Control Limits have been correctly established for monitor wells;
- Target Restoration Values have been established; and
- Hydrologic parameters have been confirmed.

The SERP will follow Standard Operating Procedure No. PBL-2, "Performance-Based License Condition: Revise and Evaluation of New Wellfields", for their detailed evaluation of the above information.

5.10.2 NON-ROUTINE REPORTS

In the event that a report of a non-routine incident becomes necessary, COGEMA will follow specific reporting procedures for that incident as identified by the particular regulatory agency. In most cases, both the WDEQ and NRC are notified by telephone or e-mail within 24 to 48 hours of verified monitor well excursions, pond leakage, significant spills, tank ruptures, or any other incidents that would trigger the reporting requirements provided in 10 CFR 20, Subpart M. Written reports will follow such telephone reports within the timeframes discussed in this application, or by other requirements imposed by the regulatory agency.

THIS PAGE IS AN OVERSIZED DRAWING OR FIGURE,

THAT CAN BE VIEWED AT THE RECORD TITLED:

DRAWING NO. FIGURE 5.5, "IRIGARAY & CHRISTENSEN RANCH ENVIRONMENTAL MONITORING STATION LOCATIONS"

WITHIN THIS PACKAGE... OR BY SEARCHING USING THE DOCUMENT/REPORT NO. FIGURE 5.5

D-03

6.0 RESTORATION AND RECLAMATION PLANS

6.1 GROUNDWATER RESTORATION

The restoration of the existing wellfields at Irigaray was successfully completed and reported to DEQ/LQD and the NRC in "Wellfield Restoration Report, Irigaray Mine", July 2004. The final groundwater restoration of the existing wellfields at Irigaray was approved by DEQ in a letter to COGEMA dated November 1, 2005, and by the NRC in a letter dated September 20, 2006. Subsequently, COGEMA proceeded to plug and abandon the Irigaray wells; that project is 99 percent complete at this time, and the decommissioning of the Irigaray wellfield surface facilities is ongoing. COGEMA also completed the groundwater restoration in all existing Christensen Ranch wellfields and reported the results of that restoration to the agencies in "Wellfield Restoration Report, Christensen Ranch Project, Wyoming", March 5, 2008. The report was submitted under cover of a COGEMA letter dated April 8, 2008. Review of that report by the agencies is pending.

6.1.1 TARGET RESTORATION VALUES

COGEMA's primary goal for restoration has been to return the quality of groundwater at the Irigaray and Christensen Ranch sites to baseline concentrations, using the best practicable technology and economic reasonableness. If the primary goal cannot be achieved, the groundwater, at a minimum, will be returned to the pre-mining use category.

Details of the establishment of baseline water quality in a particular mine unit were previously given in Section 5.8 of this application. In summary, groundwater baseline water quality is established for a mine unit by collecting samples from representative injection or recovery wells within that unit and arithmetically averaging the sample results, after outlier removal. The overall average result will be used as the baseline concentration.

Because of the number of sample results used for the average baseline determination, the spatial distance over which the samples were distributed, and the variability between sample results, the final restoration concentration achieved for a particular chemical constituent should be a function of the average baseline and the variability found between sample results used for baseline determination. Accordingly, the target restoration values will be a function of the average baseline, the range of results found in the baseline samples and the variability between sample results as defined by statistical methods agreed upon by the LQD and COGEMA. The range of individual restoration values achieved should fall between tolerance limits calculated with the mine unit baseline data base, using the same tolerance limit method previously provided in Section 5.8 under upper control limit calculations.

Target restoration values for the Christensen Ranch restoration program have been established in each individual baseline data package for Mine Units 2, 3, 4, 5, and 6 submitted to and approved by the regulatory agencies. Target values were set as the

baseline mean with an acceptable range provided by tolerance limits, to account for the baseline variability. This is necessary because we know that the exact average baseline value for a particular constituent will probably not be met at restoration, therefore the restored concentration should fall within a range of acceptable values around the mean baseline value. This range has been calculated with tolerance limits. This particular method for establishing target restoration values is currently under review by LQD and may be modified in the future to use statistical confidence limits for the mean instead of tolerance limits. For non-detectable values, the target is to restore to the same proportion of non-detectable values.

Secondary restoration target values are a function of the pre-mining use suitability criteria as established by the WDEQ. Most of the ore zone groundwater at Christensen Ranch had been classified by WDEQ as Class I Domestic, with the general exception of radium-226. Subsequently, the November 2001-issued joint WDEQ-LQD and Wyoming Water Quality Division Advisory Board policy regarding the non-treatability of radium in water (due to the problem of safe disposal of water treatment by-products) effectively resulted in the re-classification of Christensen wellfield (exempt aquifer) areas as Class IV. Other classifications at Christensen range from Class I, II, III and IV in the shallow zones, to Class I in the deep zones.

Target values for each individual Mine Unit at Christensen Ranch can be found in the individual baseline data packages for each mine unit and in the Christensen Ranch restoration report noted above.

6.1.2 RESTORATION PROCESSES

The restoration programs conducted in the past, and planned for the future involve essentially three phases of restoration processes. They are as follows:

1: Groundwater Sweep
2: Reverse Osmosis with Permeate Injection (includes metals reduction)
3: Groundwater Recirculation
4: Stabilization Monitoring

These phases of restoration have been shown to be effective in previous restoration efforts, including the 5I7 R & D site, the Irigaray E-Field restoration, Christensen Ranch Willow Creek R & D site, the Irigaray Units 1 through 9, and Christensen Ranch Units 2 through 6. The first three phases are active restoration processes. The last phase of restoration is the stability monitoring phase, where the groundwater is monitored for a minimum of nine months to assure that the restored concentrations are stable. A description of each restoration process is provided below.

6.1.2.1 Groundwater Sweep

The first step in the restoration process is to recall the mining solution from the periphery of the wellfields which has been affected by horizontal flaring. This process is termed groundwater sweep because the voids created within the ore zone aquifer during the removal of mining solutions are swept and filled with native groundwater. The goal of the groundwater sweep phase is to achieve an approximate 25% reduction in the conductivity (total dissolved solids indicator) of the composite wellfield groundwater, and return all mining solutions back to the wellfield.

Groundwater sweep is accomplished by pumping the recovery and injection wells within the wellfield with no re-injection of solutions (total water withdrawal). Wells used for the recovery may be varied during the pumping to achieve maximum flow distribution throughout the wellfield. Flow rates during groundwater sweep are dependent upon the sustainable yield of the ore zone aquifer, and will fluctuate as the program progresses. At Christensen Ranch all solutions recovered from the wellfield during the groundwater sweep phase are treated, temporarily stored in the evaporation ponds, and then injected down a deep disposal well. An alternative is to sufficiently treat the water in order to surface discharge under the WYPDES permit The solutions are treated for uranium, radium-226, and total suspended solids removal prior to discharge. Further explanation follows:

A typical groundwater sweep treatment process is shown in Figure 6.1 (Christensen Ranch Restoration Process Flow Diagram for Units 2 through 6). The process involves routing the recovered groundwater sweep solutions from the wellfields to a holding pond(s), where barium chloride will be added. Treatment with barium chloride will remove approximately 95% of the total radium-226 content by a reaction forming a barium sulfate/radium-226 co-precipitate. The barium treatment also assists with other metals reduction. Solutions in the holding pond will then be routed to the main processing plant for further treatment.

Within the process plant, the groundwater solutions from the pond will be filtered (total suspended solids removal) and then sent through the ion exchange columns for recovery of uranium. After the primary uranium removal, the solutions are sent to the treated water holding tanks, or to two optional circuits which are available to further reduce uranium and radium-226 concentrations as necessary to meet the requirements of the WYPDES permit. These optional circuits include additional barium chloride treatment and filtration through a filter press, and additional ion exchange treatment. Solutions stored in the treated water holding tanks are then released by pipeline to surface discharge.

Flow rates during groundwater sweep will vary, depending upon the aquifer properties. Flow rates typically begin around 200 to 300 gpm, then will decrease during the program due to the 100% consumptive removal.

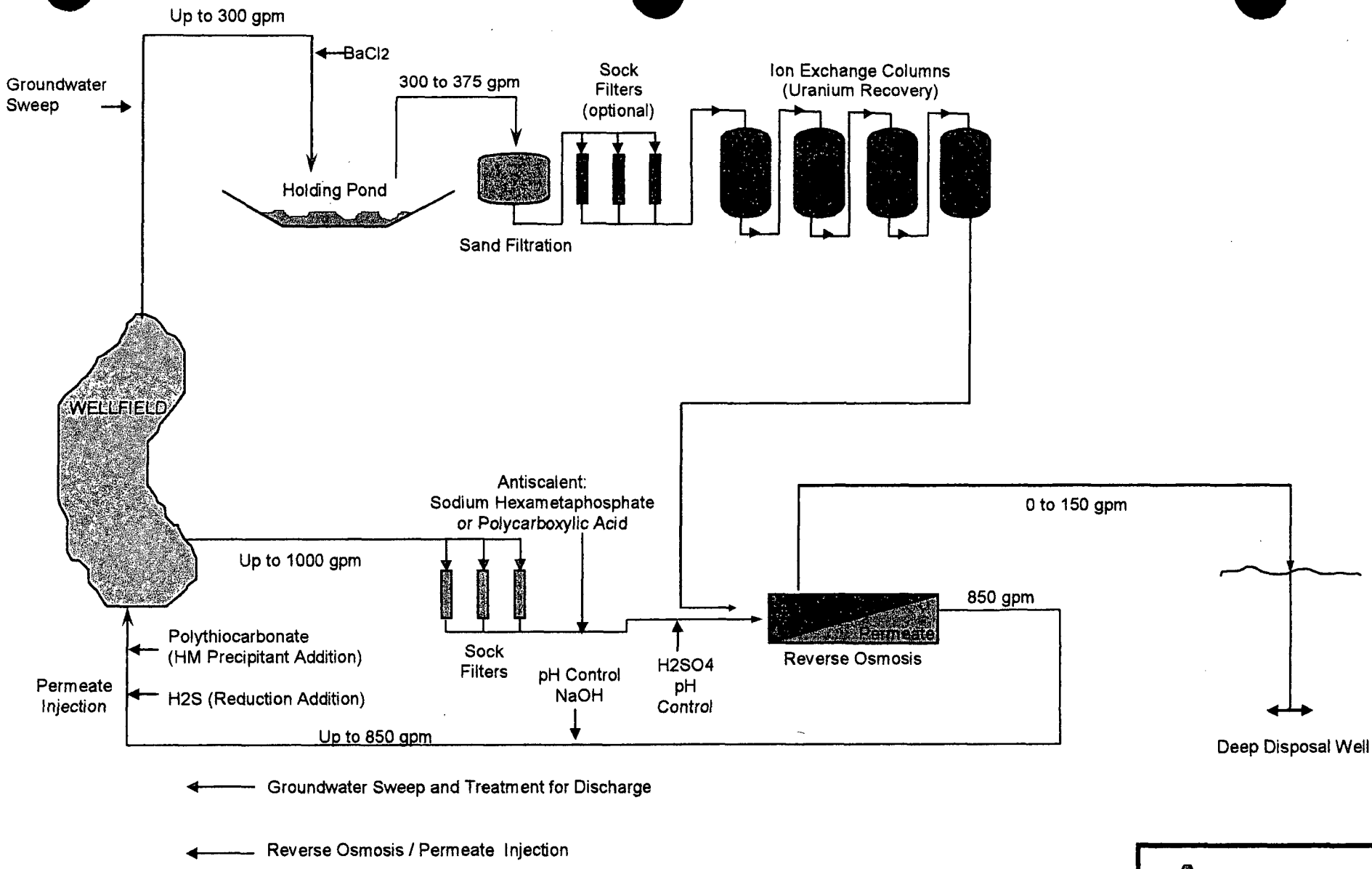

COGEMA MINING

Figure 6.1

Restoration Process Flow Diagram

6.1.2.2 Reverse Osmosis/Permeate Injection Phase

After the groundwater sweep phase is completed, the reverse osmosis/permeate injection phase will be initiated. In this phase, the groundwater is recovered from the well fields and treated in a reverse osmosis (RO) unit. The RO unit removes chemical constituents from the groundwater through a pressurized semi-permeable membrane system that yields a clean water product (permeate) and a product made up of concentrated ions (brine). All permeate produced from the RO process will be injected back into the wellfields. Brine solutions produced will be routed to holding ponds for treatment and then to a disposal well, or routed to other on-site ponds for evaporation. It is anticipated that 70% of the incoming flow will be processed into permeate, with 30% rejected as brine.
The goals of the RO/permeate injection phase are:

a) To reduce the total dissolved solids within the well field to baseline conditions;
b) To reduce trace metals and uranium concentrations to baseline conditions;
c) To return the aquifer pH to the baseline level of approximately 9.0.

During operation of the wellfield, solutions will be removed by way of the recovery wells and the permeate injected by way of the injection wells. Pattern changes may be made to accommodate better coverage in the wellfield (previous recovery wells converted to injectors, or injectors converted to recovery wells). A general wellfield overrecovery of approximately 30% will take place during this phase due to the rejection of 30% of the RO product water sent to the ponds as brine. The generalized overrecovery will be beneficial to the restoration as it will draw native unaffected groundwater into the wellfield area.

Figure 6.1 also shows a typical process flow diagram for the RO/permeate injection phase. The solutions incoming from the wellfield are routed directly to the RO units. The reverse osmosis units will typically be designed to accommodate a 500 gpm feed rate. As the RO unit has proven to be efficient at removing approximately 95% of all ions, additional uranium and radium-226 removal is not thought to be necessary. Wellfield flow rates during the RO/permeate injection phase will again vary based upon aquifer properties, but are expected to range from 200 to 500 gpm depending upon the size of the area undergoing restoration.

Operation of the RO unit requires chemical additions before and after processing. Prior to processing, antiscalants such as sodium hexametaphosphate or polycarboxylic acid are required to prevent fouling of the RO membranes. Additionally, pH control is required prior to the RO unit (sulfuric acid is added to create an acidic condition for processing), and after processing to raise the pH to baseline wellfield pH levels (addition of sodium hydroxide). Other additions to the permeate will consist of the addition of reducing chemicals for metals reduction underground, or the use of another heavy metal precipitant such as polythiocarbonate, if necessary (allowed for pilot use only in the Irigaray well fields). As the pH control of the injected permeate and metals reduction are key elements for the success

of the restoration program, these will be discussed in more detail following.

Control of Permeate Injection pH

In some mine units, the baseline groundwater pH approaches 9.0 standard units. In order to achieve this baseline value, adjustment of the permeate pH level prior to injection must be accomplished. Prior to injection, the permeate may be decarbonated in a stripping column to reduce the concentration of dissolved carbon dioxide in solution, which will in turn raise the pH. Sodium hydroxide (caustic soda) will be used to adjust the pH of the permeate stream to a pH of 9.5 prior to injection. The higher pH level for the permeate will not only bring the groundwater back to the baseline pH range, but could also in itself create a more reducing environment underground for chemical precipitation.

Metals Reduction

If the aquifer is left highly oxidized (which occurs during mining), metals and other constituents will continue to leach and remain at higher than desired levels during and after restoration. Accordingly, it may be necessary to alter the oxygenated environment during restoration by the addition of one or more of the chemical agents described below. The amount of chemical agent applied will ultimately depend upon the redox potential (Eh) of the well field at the time of the addition and the agent used as a reductant. The chemical agents that may be used as oxygen scavengers or metals reductants during the restoration process include primarily sulfur-based compounds, ranging from hydrogen sulfide gas (H_2S) and sodium sulfide _(Na_2S) to other sodium-sulfur reductants such as sodium bisulfite ($NaHSO_3$), sodium metabisulfite (NaS_2O_5) and sodium sulfite (Na_2S0_3). Hydrogen sulfide gas has been successfully used for restoration at Irigaray Units 1 through 9, and the Christensen Ranch Units 2 through 4, and sodium sulfide has been used as an oxygen scavenger in solutions prior to injection. The other sodium-sulfur compounds are expected to react similarly to the hydrogen sulfide gas and sodium sulfide. The choice of which reductant to use will be dependent upon the post-mining water quality, pH, Eh, and the type of metals to be reduced.

Additionally, another compound with the trade name of Thio-red II may be used. Thio-Red II is a liquid organo-sulfur polymer (polythiocarbonate). Thio-Red II has no hazardous ingredients or breakdown products; its affinity for heavy metals is a characteristic of the polythiocarbonate, which will not react with other cations. Theproduct is used by industry for heavy metals recovery from underground waters, waste oils, general wastewater treatment operations, and is used as a polishing agent for removing heavy metals for effluent discharge compliance. Bench scale testing of the Thio-Red II product was conducted at the Irigaray laboratory in 1990. No adverse reactions were noted either during introduction to lixiviant or permeate. In 1991, the DEQ and NRC approved Thio-Red II for use in a limited test area a Irigaray. However, the product was never tested at Irigaray. If the use of Thio-red II

were deemed necessary during future restoration at Christensen, the use would again be limited to one mine unit prior to full scale usage and would be subject to regulatory approval. The unit identified for testing would be chosen by COGEMA based upon water quality analysis. When using hydrogen sulfide gas as well as any other sulfur-based reductants that could result in some release of hydrogen sulfide gas, COGEMA will institute proper safety precautions. In April 1991, a hydrogen sulfide safety program was submitted to the WDEQ and NRC, and was approved by the NRC through license condition. This plan will be the basis for the safety procedures used during reductant usage, and will be updated on an ongoing basis as dictated by new technology or operational conditions.

6.1.2.3 Recirculation

At the completion of the permeate injection phase, the water quality in the vicinity of the injection wells will have the characteristics of the injected permeate. In order to homogenize the aquifer, the wellfield will be operated by withdrawing from the recovery wells and injecting the recovered solutions into the injections wells. No treatment of the circulated water would be performed with the exception that a small amount of reductant may be added to insure the depletion of oxygen during the process.

The recirculation phase may be operated for up to one pore volume. Minimal water discharges are planned to be produced during the recirculation, as the wellfield flow rates will be maintained in a balanced mode. The active restoration period will be completed at the end of the recirculation phase.

6.1.2.4 Stabilization Monitoring

A post-restoration stabilization monitoring period of nine months is typically instituted at the end of restoration. Within this time frame, the designated restoration wells are sampled at the beginning, then at the end of every three month period, providing a total of four samples during the nine month period of stability monitoring. The samples are analyzed for a full suite of chemical and radiological analyses. As the aquifer requires time to equilibrate after the active restoration, more frequent sampling of these wells is not recommended.

Monitor wells are typically sampled on a quarterly basis during the post-restoration stability period. Analyses include the three excursion parameters.

6.1.3 PROPOSED RESTORATION PROGRAM

The proposed restoration program for future mining activities at both Christensen Ranch and Irigaray is essentially identical to that approved for the Irigaray Units 4 through 9, "Aquifer Restoration and Wellfield Decommissioning, Units 4 through 9, March, 1995". Anticipated flow and volumes given below are considered typical and will vary depending upon local aquifer properties and the area undergoing restoration:

Treatment:	Groundwater Sweep
Flowrate:	Up to 300 gpm
Volume:	1 PVD
	Bleed to treatment, surface discharge, deep injection well, ponds, or other wastewater management practices approved in the future. Sweep solutions may be treated, stored and reinjected into other mine units undergoing restoration to minimize overall groundwater consumption and wastewater disposal volumes.

Treatment:	RO/permeate injection
Flowrate:	Up to 500 gpm
Volume:	5 PVD
	Brine to deep well injection, lined ponds, treatment and surface discharge or reinjection into another unit undergoing restoration, or other wastewater management practices approved in the future.

Treatment:	Recirculation
Flowrate:	Up to 500 gpm
Volume:	1 PVD

Treatment:	Stabilization Monitoring
Flowrate:	None
Time Period:	Minimum of 9 months

Groundwater volumes produced during restoration will depend upon the size of the mine unit and corresponding pore volume.

6.1.3.1 Restoration Schedule

It is anticipated that mining in a particular unit will be completed in a three year period. Restoration of a mine unit will typically follow completion of mining by approximately one year. If the mine unit is located adjacent to an active mining area or shares a trunkline with an active mining area, restoration may be delayed until the mining is accomplished in the adjacent unit or the trunkline is available for restoration. At that time, the mine unit in which production was just completed may serve as a buffer zone between the unit ready for restoration and another mine unit in a production mode. Restoration of each mine unit is designed to be accomplished within a two to three year period to keep up with the mining schedules. Mining and reclamation timetables for the Christensen Ranch area were previously discussed in Section 3.6.

6.1.3.2 Monitoring During Restoration

The proposed schedule for monitoring various recovery streams, designated restoration wells, and monitor wells for the well fields undergoing restoration is provided in Table 6.1.

6.1.3.3 Determination of Restoration Success

After the restoration in an area has been achieved, and the post-restoration stabilization monitoring program is completed, a report will be completed summarizing the results of the restoration program. The restoration results will be compared with the restoration target values (discussed in Section 6.1.1 above). The report will also provide the results of the stability monitoring program. The report will be submitted to the regulatory agencies for their review and approval. The acceptance of the well field restoration and stability success will be based on the ability to meet the goals of the restoration program and the lack of significant increasing trends during the stability monitoring period.

After concurrence from the WDEQ and USNRC that the restoration goals have been achieved and stability criteria have been met, decommissioning and surface reclamation of the restored area will be initiated as described in Sections 6.2 and 6.3.

6.1.4. IRIGARAY RESTORATION HISTORY

Please see the previously referenced Wellfield Restoration Report Irigaray Mine, July 2004, for a complete discussion of the groundwater restoration at Irigaray.

6.1.5 CHRISTENSEN RANCH RESTORATION HISTORY

Please see the previously referenced Wellfield Restoration Report, Christensen Ranch Project, Wyoming, March 5, 2008, for a complete discussion of the groundwater restoration to date at Christensen Ranch. The planned restoration program for future mine units at Christensen Ranch will be that described in Section 6.1.2, above. The program will be tailored to meet the individual characteristics of each mine unit, but will essentially follow Section 6.1.2.

TABLE 6.1
RESTORATION GROUNDWATER MONITORING SCHEDULE AND ANALYSES

RESTORATION PHASE	SAMPLE ORIGIN	FREQUENCY	ANALYTICAL PARAMETERS
Post-Mining	Designated Restoration Wells Ore Zone	Once	WDEQ Guideline 8*
	Monitor and Trend Wells Ore Zone Monitors Ore Zone Trends (if present) Coal Zone Trends (Irigaray only) Deep Zone Shallow Zone	Biweekly	Chloride, Conductivity, Total Alkalinity (monitor wells) Chloride (trend wells)
Restoration	Recovery Stream Composite	Weekly As Needed End of Each Pore Volume Displacement	HCO_3/CO_3, SO_4, Cl, Conductivity, pH, U_3O_8 Add Na, Ca, NH_4, TDS, etc. WDEQ Guideline 8*
	Designated Restoration Wells Ore Zone	End of Each Restoration Phase	WDEQ Guideline 8*
	Monitor Wells Ore Zone Deep Zone Shallow Zone	Monthly	Chloride, Conductivity, Total Alkalinity
	Trend Wells Coal Zone Trends (Irigaray only) Ore Zone Trends (if present)	Monthly (Groundwater Sweep Only)	Chloride
Post-Restoration	Designated Restoration Wells	Four Times	WDEQ Guideline 8*

Stability	Ore Zone Monitor Wells Ore Zone Deep Zone Shallow Zone	(Beginning, quarterly, and the end) Quarterly	Chloride, Conductivity, Total Alkalinity

* WDEQ Guideline 8 analysis consists of Ca, Mg, Na, K, CO_3, HCO_3, SO_4, Cl, NH_4 (N), NO_2 + NO_3, F, Si, TDS, Cond., Total Alk., Al, As, Ba, B, Cd, Cr, Cu, Fe, Pb, Mn, Hg, Mo, Ni, Se, V, Zn, U, and Ra-226.

6.2 DECONTAMINATION AND DECOMMISSIONING

The NRC approved a decommissioning plan for the Irigaray and Christensen Ranch sites (see Condition 9.3 of License SUA-1341). That plan is still applicable to the sites, and the reader is referred to that plan ("Decommissioning Plan for Irigaray and Christensen Ranch Projects", December, 2000, revised June 2001). Even with a resumption of production at Christensen Ranch, and resin elution, and concentrate precipitation, drying, and packaging at Irigaray, the referenced decommissioning plan would remain applicable at some future date. Prior to final decommissioning, a revision or update of the approved decommissioning plan will be submitted to the NRC and DEQ to reflect site changes (such as additional wellfields requiring decommissioning, or other site changes) and any changes in applicable regulatory requirements.

The approved decommissioning plan does not include details of the previously approved well plugging and abandonment procedures. That discussion is retained below.

6.2.1 Well Plugging and Abandonment

All wells no longer useful to continued mining or restoration operations will be abandoned. These include all injection and recovery wells, monitor wells and any other wells within the mine unit used for the collection of hydrologic or water quality data or incidental monitoring purposes. The only known exception at this time may be a well which could be transferred to the landowner for domestic or livestock use.

The objective of COGEMA's well abandonment program is to seal and abandon all wells in such a manner as to assure the groundwater supply is protected and to eliminate any potential physical hazard. The abandonment procedures contained herein are designed to comply with Wyoming Statute 35-11-404 and applicable regulations of the Department of Environmental Quality, Land and Water Quality Divisions and the Wyoming State Engineer's Office.

Three abandonment methods may be used depending upon costs at the time of decommissioning. The first method consists of placing bentonite chips in the bottom75 feet and upper 30 feet of the well with the intermediate volume filled with gravel. This method is currently used in the financial surety estimate for reclamation. A variation of this method may be used for wells with large completed intervals and/or open holes, whereby the lower portion would be filled with gravel instead of bentonite chips. When this variation is used, the lower 75 feet of bentonite chips will be started at least 10 feet below the bottom of the casing to insure sealing of the well annulus in addition to the lower casing. The second plugging method consists of placing bentonite chips throughout the entire well bore, without the use of any gravel filler. The third method consists of placing only cement

throughout the entire well bore. The cement mix would meet the same specifications given in Section 3.3.2.1 for well completions. After well plugging, the surface casing is cut off approximately two feet below the ground and a permanent tag identifying the well is attached to the top of the cement plug or cement cone. The hole where the surface casing was removed will be backfilled to the surface using local surface material. Surface reclamation will then be implemented. Records of abandoned wells will be tabulated and reported to the appropriate agencies after decommissioning. The tabulation will include the well name, permit number, total depth, aquifer or zone of completion, casing type and date and method of abandonment.

6.2.2 Records and Reporting Procedures

As noted in the approved decommissioning plan, within six months of the conclusion of site decommissioning and surface reclamation, a decommissioning report containing all applicable documentation will be submitted to the U.S. Nuclear Regulatory Commission and the Wyoming Department of Environmental Quality. Records of all contaminated materials transported to a licensed disposal site will be maintained for a period of five years or as otherwise required by applicable regulations at the time of decommissioning. A well abandonment report consistent with the requirements of Wyoming Statute 35-11-404(e) will be filed with the Administrator of the Land Quality Division and the State Engineer's Office upon completion of the decommissioning of all well fields.

6.3 SURFACE RECLAMATION

The reader is referred to Section 6.3 (pages 6-35 to 6-54) of the January 5, 1996 Irigaray-Christensen Ranch license renewal application (as revised in August, 2002) for a full discussion of surface reclamation for the sites.

6.4 BONDING ASSESSMENT

6.4.1 BOND CALCULATIONS

An up-to-date estimate for the restoration, decommissioning and surface reclamation at the Irigaray and Christensen Ranch sites is provided as Attachment 6.1. The cost assessment includes groundwater restoration, decontamination and decommissioning and surface reclamation costs for all areas affected to date by the installation and operation of the proposed mine plan through 2008 and into 2009. The detailed calculation utilized in determining the bonding requirements for the Irigaray/Christensen Ranch project are enclosed on Attachment 6.1. The estimate has been updated from the last submitted version (March 19, 2008) to reflect bringing Mine Unit 7 at Christensen Ranch into production, and by bringing the inflation adjustment forward through April, 2008.

6.4.2 FINAL SURETY ARRANGEMENTS

COGEMA currently maintains an irrevocable letter of credit number SB 22.737 issued by Credit Industriel et Commercial (CIC) in favor of the State of Wyoming for the purpose of complying with 10 CFR 40, Appendix A, Criterion 9 regarding restoration and reclamation costs.

ATTACHMENT 6.1
BONDING CALCULATIONS

Reclamation Bond Assumptions
Irigaray and Christensen Ranch ISL Projects
WDEQ Permit to Mine No. 478
NRC License SUA-1341
May 30, 2008

The bond estimate prepared in August, 2007 was based upon the 2005-2006 base-bond estimate where very detailed explanations were provided for the updated costs. Costs in the bond estimate are thoroughly detailed and have been developed by using either 1) COGEMA's actual costs, 2) a published reference source, or 3) quotes from local third-party contractors. The method by which unit rates and costs were derived is provided in the 2005-2006 estimate and is not repeated here.

There are only two changes to the enclosed bond estimate from the approved NRC surety in License Condition 9.5 of SUA-1341: the enclosed estimate reflects the completion of the abandonment of most of the wells at the Irigaray site (Worksheet 5), and it includes an inflation adjustment through April, 2008.

This estimate continues to reflect the installation of the remainder of the Christensen Ranch Mine Unit 7 wells, anticipating a return to an operational status of the license, as discussed in the approved surety submittal for 2006-2007. Restoration estimates for MU7 have not been included in this bond estimate since actual lixiviant injection into a completed MU7 would not occur prior to the next update of the surety estimate (August, 2008).

The resumption of mining at Christensen Ranch will also involve processing of the uranium at the Irigaray central plant facility. Reclamation of the Irigaray wellfield and other associated structures will continue. It should be noted that no technical changes to the mine or reclamation plan are envisioned for the resumption of operations.

Additional reclamation work that has been completed at Irigaray consists of the following:

- A total of 1,093 wells have been plugged and abandoned since the last approved surety update. Worksheet 5 of the bond estimate has been adjusted to reflect the plugging and abandonment of those wells.

No additional reclamation work completion is reflected in the estimate at Christensen Ranch.

Table 1, Summary:

- Table 1 is the summary of all the worksheets. Table 1 also indicates an inflation adjustment of 5.9 percent. The currently approved NRC bond reflects an inflation adjustment (CPI, All Urban Consumers) through September, 2006 (see CMI correspondence to the NRC dated February 16, 2007). The enclosed Table 1 updates the inflation adjustment through April, 2008.
- No other changes were made to the Table 1 format (no changes in contingencies, or miscellaneous additions to the bond).
- With the above changes the revised NRC bond amount is $9,549,520 (a decrease of $16,253).

COGEMA Mining, Inc.
SUMMARY OF RECLAMATION/RESTORATION BOND ESTIMATE, August 2007 - July 2008
WDEQ PERMIT NO. 478/USNRC LICENSE SUA-1341
TABLE 1

		WDEQ Estimate	NRC Estimate
I GROUNDWATER RESTORATION - Worksheet 1:		$3,124,253	$3,358,895
II DECOMMISSIONING AND SURFACE RECLAMATION:			
A. Process Plant(s) Equipment Removal and Disposal Worksheet 2		$184,990	$184,990
B. Plant Building(s) Demolition and Disposal Worksheet 3		$750,473	$750,473
C. Process Pond Sludge and Liner Handling Worksheet 4		$696,640	$696,640
D. Well Abandonment Worksheet 5		$578,779	$578,779
E. Wellfield Equipment Removal and Disposal Worksheet 6		$842,007	$842,007
F. Topsoil Replacement and Revegetation Worksheet 7		$942,469	$942,469
G. Miscellaneous Reclamation Activities Worksheet 8		$116,118	$116,118
Sub Total - Decommissioning and Surface Reclamation		$4,111,476	$4,111,476
TOTAL RESTORATION AND RECLAMATION		$7,235,729	$7,470,371
Adjustment for Inflation = 5.9% (Sep. 2006 CPI All Urban Consumers, 202.9, to April 2008, 214.8)		$424,372	$438,134
SUBTOTAL		$7,660,102	$7,908,505
Miscellaneous Costs Associated with Third Party Contractors			
	WDEQ / NRC		
Project Design	0.5% / 0%		
Contractor Profit & Mobilization	8% / 3%		
Pre-construction Investigation	1%		
Project Management	3% / 2%		
On-site monitoring	0.5%		
Site Security & Liability Assurance	1% / 0.0%		
Longterm Administration	2%		
Subtotal miscellaneous additions to bond	16.0% / 5.0%	$1,225,616	$395,425.25
SUBTOTAL		$8,885,718	$8,303,930
	WDEQ / NRC		
Contingency	4% / 15%	$355,429	$1,245,590
GRAND TOTAL RESTORATION AND RECLAMATION		$9,241,147	$9,549,520

COGEMA Mining, Inc.
2007 Restoration and Reclamation Costs
Wyoming Operations
WORKSHEET 1

GROUNDWATER RESTORATION	Irigaray Mine Unit(s) #1 Thru #5	Irigaray Mine Unit(s) #6 Thru #9	Christensen Mine Unit #2	Christensen Mine Unit #3	Christensen Mine Unit #4	Christensen Mine Unit #5	Christensen Mine Unit #6	Christensen Mine Unit #7	Christensen Mine Unit #8
Technical Assumptions:									
Wellfield Area (Ft²)	522720	784080	890000	798944	510088	1210968	2021243	1332936	1600000
Wellfield Area (Acres)	12.00	18.00	20.43	18.34	11.71	27.80	46.40	30.6	36.7
Affected Ore Zone Area (Ft²)	522720	784080	890000	798944	550193	1346004	2058344		
Avg Completed Thickness (Ft)	15.0	18.0	11.0	10.0	12.7	19.9	21.8		
Affected Volume:									
Factor For Vertical Flare	20%	20%	20%	20%	20%	20%	20%		
Factor For Horizontal Flare	20%	20%	20%	20%	20%	20%	20%		
Total Volume (Ft³)	11290752	20323353.6	14097600	11504793.6	10061929.6	38593685.7	64615534.85		
Porosity	26.0%	26.0%	26.0%	26.0%	26.0%	26.0%	26.0%		
Gallons Per Cubic Foot	7.48	7.48	7.48	7.48	7.48	7.48	7.48		
Gallons Per Pore Volume	21958254.49	39524858.1	27417012.5	22374522.6	19568440.7	75057000	125664292.2		
Number of Wells in Unit(s)									
Production Wells	150	274	153	185	105	217	202	155	
Injection Wells	310	330	173	277	128	277	244	170	
Monitor Wells	150	165	50	46	44	70	65	66	
Baseline Water Quality wells (prod or inj)	19	27	24	19	15	25	47		
Average Well Spacing (Ft)	35	35	85	70	85	85	100	100	
Average Well Depth (Ft)	250	250	345	300	430	450	520	550	
I GROUNDWATER SWEEP									
A. PLANT & OFFICE									
Operating Assumptions:									
Flowrate (gpm)			200	200	200	200	200		
PV's Required			1	1	1	1	1		
Total Gallons For Treatment			27417012.5	22374522.6	19568440.7	75057000	125664292.2		
Total KGals for Treatment			27417	22375	19568	75057	125664		
Cost Assumptions:									
Power									
Avg Connected Hp			40.00	40.00	40.00	40.00	40.00		
Kwh's/Hp			0.83	0.83	0.83	0.83	0.83		
$/Kwh			$0.0365	$0.0365	$0.0365	$0.0365	$0.0365		
Gallons Per Minute			200	200	200	200	100		
Gallons Per Hour			12000	12000	12000	12000	6000		
Cost Per Hour			1.21	1.21	1.21	1.21	1.21		
Cost Per Gallon			0.00010	0.00010	0.00010	0.00010	0.00020		
Cost Per KGal ($)			$0.101	$0.101	$0.101	$0.101	$0.202		
Chemicals									
Antiscalent ($/Kgals)			$0.0947	$0.0947	$0.0947	$0.0947	$0.0947		
Elution ($/KGals)			$0.099	$0.099	$0.099	$0.099	$0.099		
Repair & Maintenance ($/KGals)			$0.0379	$0.0379	$0.0379	$0.0379	$0.0379		
Analysis ($/KGals)			$0.131	$0.127	$0.115	$0.050	$0.056		
Total Cost Per KGal			$0.464	$0.460	$0.448	$0.383	$0.490		
Total Treatment Cost			$12,718	$10,291	$8,758	$28,713	$61,534		
Utilities									
Power ($/Month)			$65	$65	$65	$65	$65		
Telephone ($/Month			$500	$500	$500	$500	$500		
Time For Treatment									
Minutes For Treatment			137085	111873	97842	375285	628321		
Hours For Treatment			2285	1865	1631	6255	10472		
Days For Treatment			95	78	68	261	436		
Average Days Per Month			30.4	30.4	30.4	30.4	30.4		
Months For Treatment			3.1	2.6	2.2	8.6	14.3		
Utilities Cost ($)			$1,768	$1,443	$1,262	$4,841	$8,105		
TOTAL PLANT & OFFICE COST	$0	$0	$14,487	$11,734	$10,020	$33,554	$69,639	$0	$0
I GROUNDWATER SWEEP (Continued)									
B. WELLFIELD									
Cost Assumptions:									
Power									
Avg Flow/Pump (gpm)			20	20	20	20	20		
Avg Hp/Pump			3.00	3.00	3.00	3.00	3.00		
Avg # of Pumps Required			10.0	10.0	10.0	10.0	10.0		
Avg Connected Hp			25	25	25	25	25		
Kwh's/Hp			0.830	0.830	0.830	0.830	0.830		
$/Kwh			$0.0365	$0.0365	$0.0365	$0.0365	$0.0365		

COGEMA Mining, Inc.
2007 Restoration and Reclamation Costs
Wyoming Operations
WORKSHEET 1

GROUNDWATER RESTORATION	Irigaray Mine Unit(s) #1 Thru #5	Irigaray Mine Unit(s) #6 Thru #9	Christensen Mine Unit #2	Christensen Mine Unit #3	Christensen Mine Unit #4	Christensen Mine Unit #5	Christensen Mine Unit #6	Christensen Mine Unit #7	Christensen Mine Unit #8
Gallons Per Minute			200	200	200	200	200		
Gallons Per Hour			12000	12000	12000	12000	12000		
Cost Per Hour ($)			$0.76	$0.76	$0.76	$0.76	$0.76		
Cost Per Gallon ($)			$0.0001	$0.0001	$0.0001	$0.0001	$0.0001		
Cost Per KGal ($)			0.063	0.063	0.063	0.063	0.063		
Repair & Maintenance ($/KGals)			$0.289	$0.289	$0.289	$0.289	$0.289		
Total Cost Per KGal			$0.353	$0.353	$0.353	$0.353	$0.353		
TOTAL WELLFIELD COST	$0	$0	$9,665	$7,887	$6,898	$26,459	$44,298	$0	$0
TOTAL GROUND WATER SWEEP COST	$0	$0	$24,152	$19,622	$16,918	$60,012	$113,937	$0	$0
II REVERSE OSMOSIS									
A. PLANT & OFFICE									
Operating Assumptions:									
Flowrate (gpm)			500	500	500	500	500		
PV's Required			5.0	5.0	5.0	5.0	5.0		
Total Gallons For Treatment			137085062	111872613	97842203.3	375285000	628321460.9		
Total KGals for Treatment			137085	111873	97842	375285	628321		
Feed to RO (gpm)			500	500	500	500	500		
Permeate Flow (gpm)			375	375	375	375	375		
Brine Flow (gpm)			125	125	125	125	125		
Average RO Recovery			75.0%	75.0%	75.0%	75.0%	75.0%		
Cost Assumptions:									
Power									
Avg Connected Hp			560.00	560.00	560.00	560.00	560.00		
Kwh's/Hp			0.830	0.830	0.830	0.830	0.830		
$/Kwh			$0.0365	$0.0365	$0.0365	$0.0365	$0.0365		
Gallons Per Minute			500	500	500	500	500		
Gallons Per Hour			30000	30000	30000	30000	30000		
Cost Per Hour ($)			$16.97	$16.97	$16.97	$16.97	$16.97		
Cost Per Gallon ($)			$0.00057	$0.00057	$0.00057	$0.00057	$0.00057		
Cost Per KGal ($)			$0.566	$0.566	$0.566	$0.566	$0.566		
Chemicals									
Caustic Soda ($/KGals)			$0.018	$0.018	$0.018	$0.018	$0.018		
Antiscalent ($/Kgals)			$0.0947	$0.0947	$0.0947	$0.0947	$0.0947		
Elution ($/Kgals)			$0.099	$0.099	$0.099	$0.099	$0.099		
Repair & Maintenance ($/KGals)			$0.038	$0.038	$0.038	$0.038	$0.038		
Sampling & Analysis ($/KGals)			$0.090	$0.122	$0.092	$0.039	$0.032		
Total Cost Per KGal ($)			$0.905	$0.937	$0.907	$0.854	$0.847		
Total Pumping Cost ($)	$0	$0	$124,089	$104,788	$88,752	$320,397	$531,949		
Utilities									
Power ($/Month)			$65	$65	$65	$65	$65		
Propane ($/Month			$500	$500	$500	$500	$500		
Time For Treatment									
Minutes For Treatment			274170	223745	195684	750570	1256643		
Hours For Treatment			4570	3729	3261	12510	20944		
Days For Treatment			190	155	136	521	873		
Average Days Per Month			30.4	30.4	30.4	30.4	30.4		
Months For Treatment			6.3	5.1	4.5	17.1	28.7		
Utilities Cost ($)	$0	$0	$3,560	$2,882	$2,543	$9,662	$16,216		
TOTAL PLANT & OFFICE COST	$0	$0	$127,648	$107,670	$91,294	$330,059	$548,165	$0	$0
II REVERSE OSMOSIS (Continued)									
B. WELLFIELD									
Cost Assumptions:									
Power									
Avg Flow/Pump (gpm)			20.00	20.00	20.00	20.00	20.00		
Avg Hp/Pump			3.00	3.00	3.00	3.00	3.00		
Avg # of Pumps Required			25.0	25.0	25.0	25.0	25.0		
Avg Connected Hp			75.0	75.0	75.0	75.0	75.0		
Kwh's/Hp			0.830	0.830	0.830	0.830	0.830		
$/Kwh			$0.0365	$0.0365	$0.0365	$0.0365	$0.0365		
Gallons Per Minute			500	500	500	500	500		
Gallons Per Hour			30000	30000	30000	30000	30000		
Cost Per Hour ($)			$2.27	$2.27	$2.27	$2.27	$2.27		
Cost Per Gallon ($)			$0.0001	$0.0001	$0.0001	$0.0001	$0.0001		
Cost Per KGal ($)			$0.076	$0.076	$0.076	$0.076	$0.076		
Repair & Maintenance ($/KGals)			$0.289	$0.289	$0.289	$0.289	$0.289		

COGEMA Mining, Inc.
2007 Restoration and Reclamation Costs
Wyoming Operations
WORKSHEET 1

GROUNDWATER RESTORATION	Irigaray Mine Unit(s) #1 Thru #5	Irigaray Mine Unit(s) #6 Thru #9	Christensen Mine Unit #2	Christensen Mine Unit #3	Christensen Mine Unit #4	Christensen Mine Unit #5	Christensen Mine Unit #6	Christensen Mine Unit #7	Christensen Mine Unit #8
Total Cost Per KGal			$0.365	$0.365	$0.365	$0.365	$0.365		
TOTAL WELLFIELD COST	$0	$0	$50,000	$40,804	$35,687	$136,881	$229,172	$0	$0
Add for 1 PV of Hydrogen Sulfide gas reductant $0.863 per Kgal			$23,661	$19,309	$16,888	$64,774	$108,448		
TOTAL REVERSE OSMOSIS COST	$0	$0	$201,309	$167,783	$143,869	$531,714	$885,785	$0	$0
III WASTE DISPOSAL WELL									
Operating Assumptions:									
Annual Evaporation Capacity (Gals)			1,917,612	1,917,612	1,917,612	1,917,612	1,917,612		
Avg. Monthly Evap. Capacity (Gals)			159,801	159,801	159,801	159,801	159,801		
Total Disposal Requirement									
RO Brine Total Gallons			34,271,266	27,968,153	24,460,551	93,821,250	157,080,365		
RO Brine Total KGallons			34,271	27,968	24,461	93,821	157,080		
Brine Concentration Factor			60%	60%	60%	60%	60%		
Total Concentrated Brine (Gals)			20,562,759	16,780,892	14,676,330	56,292,750	94,248,219		
Months of RO Operation			6.3	5.1	4.5	17.1	28.7		
Average Monthly Reqm't (Gallons)			3,263,930	3,290,371	3,261,407	3,291,974	3,283,910		
Monthly Balance for DDW (Gals)			3,104,129	3,130,570	3,101,606	3,132,173	3,124,109		
Total WDW Disposal (Gallons)			19,556,013	15,965,907	13,957,226	53,560,153	89,661,930		
Total WDW Disposal (KGals)			19,556	15,966	13,957	53,560	89,662		
Cost Assumptions:									
Power									
Avg Connected Hp			100.00	100.00	100.00	100.00	100.00		
WDW Avg Connected Hp			180.00	180.00	180.00	180.00	180.00		
Kwh's/Hp			0.830	0.830	0.830	0.830	0.830		
$/Kwh			$0.0365	$0.0365	$0.0365	$0.0365	$0.0365		
Gallons Per Minute			150	150	150	150	150		
Gallons Per Hour			9000	9000	9000	9000	9000		
Cost Per Hour ($)			$8.48	$8.48	$8.48	$8.48	$8.48		
Cost Per Gallon ($)			$0.0009	$0.0009	$0.0009	$0.0009	$0.0009		
Cost Per KGal ($)			$0.943	$0.943	$0.943	$0.943	$0.943		
Chemicals ($/Kgals)									
RO Antiscalent ($/Kgals)			$0.190	$0.190	$0.190	$0.190	$0.190		
WDW Antiscalent ($/Kgals)			$0.237	$0.237	$0.237	$0.237	$0.237		
Sulfuric Acid ($/Kgals)			$0.534	$0.534	$0.534	$0.534	$0.534		
Corrosion Inhibitor			$0.000	$0.000	$0.000	$0.000	$0.000		
Algacide			$0.111	$0.111	$0.111	$0.111	$0.111		
Repair & Maint ($/Kgals)			$0.077	$0.077	$0.077	$0.077	$0.077		
Total Cost Per KGal			$2.092	$2.092	$2.092	$2.092	$2.092		
TOTAL WASTE DISPOSAL WELL COST			$40,902	$33,393	$29,192	$112,022	$187,529	$0	$0
IV STABILIZATION MONITORING									
Operating Assumptions:									
Time of Stabilization (mos)			9	9	9	9	9		
Frequency of Analysis (mos)			3	3	3	3	3		
Total Sets of Analysis			3	3	3	3	3		
Cost Assumptions:									
Generator Rental per sample set			$280	$280	$280	$280	$280		
Analytical costs per set			$3,600	$2,850	$2,250	$3,750	$7,050		
Total Sampling & Analysis Cost ($)			$11,640	$9,390	$7,590	$12,090	$21,990		
Utilities (Power + Telephone per month)			$565	$565	$565	$565	$565		
Total Utilities Cost ($)			$5,085	$5,085	$5,085	$5,085	$5,085		
TOTAL STABILIZATION COST	$0	$0	$16,725	$14,475	$12,675	$17,175	$27,075	$0	$0

V LABOR (Irigaray and Christensen Combined)			
Cost Assumptions	Cost/Hour	Hours/Year	Cost
Crew:			
1 Supervisor	$25.00	2080	$52,000
4 Operators	$20.00	2080	$166,400
2 Maintenance	$20.00	2080	$83,200
2 Vehicles	$12.00	2080	$49,920
Cost per Year			$351,520
Time Required - Years	1.6		
TOTAL RESTORATION LABOR COST	$562,432		

COGEMA Mining, Inc.
2007 Restoration and Reclamation Costs
Wyoming Operations
WORKSHEET 1

GROUNDWATER RESTORATION

	Irigaray Mine Unit(s) #1 Thru #5	Irigaray Mine Unit(s) #6 Thru #9	Christensen Mine Unit #2	Christensen Mine Unit #3	Christensen Mine Unit #4	Christensen Mine Unit #5	Christensen Mine Unit #6	Christensen Mine Unit #7	Christensen Mine Unit #8
	Irigaray Mine Unit(s) #1 Thru #9	Christensen Mine Unit #2 Thru #4	Total Christensen & Irigaray						
VI RESTORATION CAPITAL REQUIREMENTS									
I Deep Disposal Well(s) - new		$0							
II Plug and Abandon CR DW-1		$73,950							
III Plug and Abandon CR 18-3		$66,250							
IV 500 GPM Reverse Osmosis Unit		$0							
Total	$0	$140,200							

	Irigaray Mine Unit(s) #1 Thru #5	Irigaray Mine Unit(s) #6 Thru #9	Christensen Mine Unit #2	Christensen Mine Unit #3	Christensen Mine Unit #4	Christensen Mine Unit #5	Christensen Mine Unit #6	Christensen Mine Unit #7	Christensen Mine Unit #8	TOTAL
SUMMARY:										
I GROUNDWATER SWEEP	$0	$0	$24,152	$19,622	$16,918	$60,012	$113,937	$0		
II REVERSE OSMOSIS	$0	$0	$201,309	$167,783	$143,869	$531,714	$885,785	$0		
III WASTE DISPOSAL WELL	$0	$0	$40,902	$33,393	$29,192	$112,022	$187,529	$0		
IV STABILIZATION	$0	$0	$16,725	$14,475	$12,675	$17,175	$27,075	$0		
SUB TOTAL	$0	$0	$283,088	$235,273	$202,654	$720,923	$1,214,327	$0		$2,656,263
V LABOR										$562,432
VI CAPITAL										$140,200
TOTAL GROUNDWATER RESTORATION COST										**$3,358,895**
Credit for Completion of Groundwater Sweep (WDEQ)			$24,152	$19,622	$16,918	$60,012	$113,937	$0		$234,642
Credit for Completion of Reverse Osmosis (WDEQ)										$0
Credit Completion of Stabilization Monitoring (WDEQ)										$0
Credit Subtotal			$24,152	$19,622	$16,918	$60,012	$113,937	$0	$0	**$234,642**
GRAND TOTAL WDEQ	$0	$0	$258,936	$215,651	$185,735	$660,910	$1,100,389	$0	$0	**$3,124,253**
GRAND TOTAL NRC (no credi	$0	$0	$283,088	$235,273	$202,654	$720,923	$1,214,327	$0	$0	**$3,358,895**

COGEMA Mining, Inc.
2007 Restoration and Reclamation Costs
Wyoming Operations
WORKSHEET 2

PLANT EQUIPMENT REMOVAL AND DISPOSAL	Irigaray							Christensen				
	Maint Area & Laboratory	Main Process Building	Expansion Building	Resin +Sand Filter Media	Dry Pack Area	Restoration Building	Sub Total	Satellite Plant	Resin + Sand Filter Media	Restoration Extension	Wellfield Modules	Sub Total
Volume (Yds³)	40	0	180	110	40	0		91	197	42	55	
Quantity Per Truck Load (Yds³)	20	20	20	20	20	20		20	20	20	20	
Number of Truck Loads	2.0	0.0	9.0	5.5	2.0	0.0		4.55	9.9	2.1	2.8	
I Decontamination Cost												
Decontamination Cost ($/Load)	$435	$435	$435	$435	$435	$435		$435	$435	$435	$435	
Percent Requiring Decontamination	20.0%	100.0%	100.0%	0.0%	100.0%	100.0%		100.0%	0.0%	100.0%	100.0%	
Total Cost	$174	$0	$3,915	$0	$870	$0	$4,959	$1,979	$0	$914	$1,196	$4,089
II Dismantle and Loading Cost												
Cost Per Truck Load ($)	$650	$650	$650	$650	$650	$650		$650	$650	$650	$650	
Total Cost	$1,300	$0	$5,850	$3,575	$1,300	$0	$12,025	$2,958	$6,403	$1,365	$1,788	$12,513
III Oversize Charges												
Percent Requiring Permits	40.0%	40.0%	40.0%	0.0%	60.0%	40.0%		40.0%	0.0%	40.0%	0.0%	
Cost Per Truck Load ($)	$326	$326	$326	$326	$326	$326		$326	$326	$326	$326	
Total Cost	$261	$0	$1,174	$0	$391	$0	$1,826	$593	$0	$274	$0	$867
IV Transportation & Disposal												
A. Landfill												
Percent To Be Shipped	80.0%	80.0%	80.0%	0.0%	50.0%	80.0%		80.0%	0.0%	80.0%	80.0%	
Transportation Cost Per Truck Load	$160	$160	$160	$160	$160	$160		$160	$160	$160	$160	
Transportation Cost	$256	$0	$1,152	$0	$160	$0		$582	$0	$269	$352	
Disposal Fee Per Cubic Yard	$12.00	$12.00	$12.00	$12.00	$12.00	$12.00		$12.00	$12.00	$12.00	$12.00	
Disposal Cost ($)	$384	$0	$1,728	$0	$240	$0		$874	$0	$403	$528	
Total Cost	$640	$0	$2,880	$0	$400	$0		$1,456	$0	$672	$880	
B. Licensed Site												
Percent To Be Shipped	20.0%	20.0%	20.0%	100.0%	50.0%	20.0%		20.0%	100.0%	20.0%	20.0%	
Transportation Cost Per Truck Load	$1,000	$1,000	$1,000	$1,000	$1,000	$1,000		$1,000	$1,000	$1,000	$1,000	
Transportation Cost	$400	$0	$1,800	$5,500	$1,000	$0		$910	$9,850	$420	$550	
Disposal Cost Per Cubic Foot ($)	$11.00	$11.00	$11.00	$11.00	$11.00	$11.00		$11.00	$11.00	$11.00	$11.00	
Quantity Per Truck Load (Yds³)	20.0	20.0	20.0	20.0	20.0	20.0		20.0	20.0	20.0	20.0	
Quantity Per Truck Load (Ft³)	540	540	540	540	540	540		540	540	540	540	
Disposal Cost	$2,376	$0	$10,692	$32,670	$5,940	$0		$5,405	$58,509	$2,495	$3,267	
Total Cost Licensed Site	$2,776	$0	$12,492	$38,170	$6,940	$0		$6,315	$68,359	$2,915	$3,817	
Total Cost Transportation & Disposal	$3,416	$0	$15,372	$38,170	$7,340	$0	$64,298	$7,771	$68,359	$3,587	$4,697	$84,414
TOTAL COST	$5,151	$0	$26,311	$41,745	$9,901	$0	$83,108	$13,301	$74,762	$6,139	$7,681	$101,883
TOTAL COST - IRIGARAY AND CHRISTENSEN												$184,990

[redacted]MA Mining, Inc.
2007 Restoration and Reclamation Costs
Wyoming Operations
WORKSHEET 3

	Irigaray							Christensen						
	Maint Area & Laboratory	Warehouse & Offices	Main Process Building	Expansion Building	Dry Pack Area	Restoration Building	Sub Total	Satellite Plant	Wellfield Modules	Booster Pump Bldgs.	Restoration Extension	Office Building	Warehouse	Sub Total
BUILDING DEMOLITION AND DISPOSAL														
Structural Character	1 Story Steel Frame	1 Story Steel Frame	1 Story Steel Frame	1 Story Steel Frame	3 Story Steel/Masonry	1 Story Steel Frame		2 Story Steel Frame	1 Story Pre Fab (22)	1 Story Pre Fab (4)	2 Story Steel Frame	1 Story Pre-Fab	1 Story Steel Frame	
Demolition Volume (Ft³)	179400	108720	430400	386400	126000	69640		192000	95040	46720	72000	64800	11000	
Cost of Demolition Per Ft³	$0.1650	$0.1650	$0.1650	$0.1650	$0.1650	$0.1650		$0.1650	$0.1650	$0.1650	$0.1650	$0.1650	$0.1650	
Demolition Cost ($)	$29,601	$17,939	$71,016	$63,756	$20,790	$11,491	$214,592	$31,680	$15,682	$7,709	$11,880	$10,692	$1,815	$79,457
Factor For Gutting	15.0%	10.0%	30.0%	10.0%	20.0%	10.0%		20.0%	0.0%	0.0%	20.0%	10.0%	10.0%	
Cost For Gutting ($)	$4,440	$1,794	$21,305	$6,376	$4,158	$1,149	$39,221	$6,336	$0	$0	$2,376	$1,069	$182	$9,963
Weight (pounds)	158761	96212	380885	341947	111504	61628		169912	66660	28032	63717	38802	9735	
Weight per Truckload	40000	40000	40000	40000	40000	40000		40000	40000	40000	40000	40000	40000	
Number of Truckloads	4.0	2.4	9.5	8.5	2.8	1.5		4.2	1.7	0.7	1.6	1.0	0.2	
Transportation Cost per Truckload	$160	$160	$160	$160	$160	$160		$160	$160	$160	$160	$160	$160	
Transportation Cost ($)	$635	$385	$1,524	$1,368	$446	$247	$4,604	$680	$267	$112	$255	$155	$39	$1,507
Disposal Cost per Truckload (25 CY)	$300.00	$300.00	$300.00	$300.00	$300.00	$300.00		$300.00	$300.00	$300.00	$300.00	$300.00	$300.00	
Disposal Cost ($)	$1,191	$722	$2,857	$2,565	$836	$462	$8,632	$1,274	$500	$210	$478	$291	$73	$2,826
TOTAL COST	$35,867	$20,839	$96,701	$74,064	$26,230	$13,348	$267,050	$39,970	$16,448	$8,031	$14,989	$12,207	$2,108	$93,754
TOTAL COST IRIGARAY AND CHRISTENSEN														$360,804
CONCRETE DECONTAMINATION, DEMOLITION & DISPOSAL														
Area (Ft²)	8020	7100	17600	18400	5600	3600		9600	0	1440	3600	0	1000	
Average Thickness (Ft)	0.5	0.5	0.5	0.5	1	0.5		0.5	0.0	0.5	0.5	0.0	0.5	
Volume (Ft³)	4010	3550	8800	9200	5600	1800		4800	0	720	1800	0	500	
Percent Requiring Decontamination	0.0%	0.0%	100.0%	100.0%	100.0%	100.0%		100.0%	0.0%	100.0%	100.0%	0.0%	0.0%	
Percent Decontaminated	0.0%	0.0%	75.0%	75.0%	40.0%	75.0%		75.0%	0.0%	100.0%	100.0%	0.0%	0.0%	
Decontamination ($/Ft²)	$0.134	$0.134	$0.134	$0.134	$0.134	$0.134		$0.134	$0.134	$0.134	$0.134	$0.134	$0.134	
Decontamination Cost	$0	$0	$1,769	$1,849	$300	$362	$4,280	$965	$0	$193	$482	$0	$0	$1,640
Demolition ($/Ft²)	$3.05	$3.05	$3.05	$3.05	$3.05	$3.05		$3.05	$3.05	$3.05	$3.05	$3.05	$3.05	
Demolition Cost	$24,461	$21,655	$53,680	$56,120	$17,080	$10,980	$183,976	$29,280	$0	$4,392	$10,980	$0	$3,050	$47,702
Transportation & Disposal														
A. Onsite Disposal														
Percent to be Disposed Onsite	100%	100%	90%	90%	40%	90%		90%	0%	100%	100%	0%	100%	
Transportation Cost	$0	$0	$0	$0	$0	$0		$0	$0	$0	$0	$0	$0	
Disposal Cost per Cubic Foot	$0.230	$0.230	$0.230	$0.230	$0.230	$0.230		$0.230	$0.230	$0.230	$0.230	$0.230	$0.230	
Disposal Cost ($)	$922	$817	$1,822	$1,904	$515	$373	$6,353	$994	$0	$166	$414	$0	$115	$1,688
B. Licensed Site														
Percent to be Shipped	0%	0%	10%	10%	60%	10%		10%	100%	0%	0%	100%	0%	
Transportation Cost per Truckload	$1,000	$1,000	$1,000	$1,000	$1,000	$1,000		$1,000	$1,000	$1,000	$1,000	$1,000	$1,000	
Transportation Cost ($)	$0	$0	$1,630	$1,704	$6,222	$333	$9,889	$889	$0	$0	$0	$0	$0	$889
Disposal Cost per Cubic Foot	$3.70	$3.70	$3.70	$3.70	$3.70	$3.70		$3.70	$3.70	$3.70	$3.70	$3.70	$3.70	
Quantity Per Truck Load (Yds³)	20	20	20	20	20	20		20	20	20	20	20	20	
Quantity Per Truck Load (Ft³)	540	540	540	540	540	540		540	540	540	540	540	540	
Disposal Cost ($)	$0	$0	$3,256	$3,404	$12,432	$666	$19,758	$1,776	$0	$0	$0	$0	$0	$1,776
TOTAL COST	$25,383	$22,472	$62,156	$64,981	$36,550	$12,714	$224,255	$33,903	$0	$4,751	$11,876	$0	$3,165	$53,695
TOTAL COST IRIGARAY AND CHRISTENSEN														$277,951
SOIL REMOVAL & DISPOSAL														
Assume removal of 3" of Contaminated Soil under Primary Areas, Disposal at a Licensed facility.														
Removal with Loader ($75/hr) $75	$0	$0	$1,222	$1,278	$389	$250	$3,139	$667	$0	$0	$0	$0	$0	$667
Quantity to be Shipped (Ft³)	0	0	4400	4600	1400	900		2400	0	0	0	0	0	
Transportation Cost per Truckload	$1,000	$1,000	$1,000	$1,000	$1,000	$1,000		$1,000	$1,000	$1,000	$1,000	$1,000	$1,000	
Transportation Cost ($)	$0	$0	$8,148	$8,519	$2,593	$1,667	$20,926	$4,444	$0	$0	$0	$0	$0	$4,444
Disposal fee Per Cubic Foot($)	$3.70	$3.70	$3.70	$3.70	$3.70	$3.70		$3.70	$3.70	$3.70	$3.70	$3.70	$3.70	
Quantity per Truckload (Ft³)	540	540	540	540	540	540		540	540	540	540	540	540	
Disposal Cost ($)	$0	$0	$16,280	$17,020	$5,180	$3,330	$41,810	$8,880	$0	$0	$0	$0	$0	$8,880
Removal, NPDES Pts.														
Quantity to be Shipped (Ft³)			559					5,030						
Transportation Cost per Truckload	$1,000	$1,000	$1,000	$1,000	$1,000	$1,000		$1,000	$1,000	$1,000	$1,000	$1,000	$1,000	

MA Mining, Inc.
Restoration and Reclamation Costs
Wyoming Operations
WORKSHEET 3

	Irigaray							Christensen						
	Maint Area & Laboratory	Warehouse & Offices	Main Process Building	Expansion Building	Dry Pack Area	Restoration Building	Sub Total	Satellite Plant	Wellfield Modules	Booster Pump Bldgs.	Restoration Extension	Office Building	Warehouse	Sub Total
Transportation Cost ($)	$0	$0	$1,035	$0	$0	$0	$1,035	$9,315	$0	$0	$0	$0	$0	$9,315
Disposal fee Per Cubic Foot($)	$3.70	$3.70	$3.70	$3.70	$3.70	$3.70		$3.70	$3.70	$3.70	$3.70	$3.70	$3.70	
Quantity per Truckload (Ft³)	540	540	540	540	540	540		540	540	540	540	540	540	
Disposal Cost ($)	$0	$0	$2,068	$0	$0	$0	$2,068	$18,611	$0	$0	$0	$0	$0	$18,611
Total Cost	$0	$0	$28,753	$26,816	$8,161	$5,247	$68,978	$41,917	$0	$0	$0	$0	$0	$41,917
TOTAL COST	$0	$0	$28,753	$26,816	$8,161	$5,247	$68,978	$41,917	$0	$0	$0	$0	$0	$41,917
TOTAL COST IRIGARAY AND CHRISTENSEN														$110,895

RADIATION SURVEY														
Area required (acres)	0.18	0.16	0.40	0.42	0.13	0.08		0.22	0.00	0.03	0.08	0.00	0.02	
Survey Cost ($/acre)	$520.00	$520.00	$520.00	$520.00	$520.00	$520.00		$520.00	$520.00	$520.00	$520.00	$520.00	$520.00	
TOTAL SURVEY COST ($)	$96		$210	$220	$67	$43	$636	$115	$0	$17	$43	$0	$12	$187

TOTAL COST	$61,346	$43,311	$187,820	$166,082	$71,008	$31,352	$560,919	$115,906	$16,448	$12,799	$26,908	$12,207	$5,285	$189,554
TOTAL COST IRIGARAY AND CHRISTENSEN														$750,473

COGEMA Mining, Inc.
2007 Restoration and Reclamation Costs
Wyoming Operations
WORKSHEET 4

POND RECLAMATION COST	Irigaray							Christensen					
	Pond A	Pond B	Pond C	Pond D	Pond E	Pond RA	Pond RB	Brine Pond 1	Brine Pond 2	Brine Pond 3	Brine Pond 4	Permeate Pond	
POND SLUDGE:													
Average Sludge Depth (Ft)		0.156					0.156	0.166	0.222	0.143	0.068	0.000	
Average Area of Sludge (Ft^2)		50,604					50,604	20,909	20,909	20,909	20,909	-	
Volume of Sludge (Ft^3)		7,907					7,907	3,466	4,651	2,983	1,414	-	
Volume of Sludge (Yds^3)		293					293	128	172	110	52	0	
Volume of Sludge Per Truck Load (Yds^3)		20.0					20.0	20.0	20.0	20.0	20.0	20.0	
# of Truck Loads of Sludge		14.7					14.7	6.4	8.6	5.5	2.6	0.0	
Sludge Handling Cost Per Load ($)		$240.00					$240.00	$240.00	$240.00	$240.00	$240.00	$240.00	
Total Sludge Handling Cost ($)	$0	$3,528	$0	$0	$0	$0	$3,528	$1,536	$2,064	$1,320	$624	$0	
Transportation & Disposal													
Percent To Be Shipped to Licensed Site		100.0%					100.0%	100.0%	100.0%	100.0%	100.0%	100.0%	
Transportation Cost per Truckload		$1,000					$1,000	$1,000	$1,000	$1,000	$1,000	$1,000	
Transportation Cost ($)		$14,700					$14,700	$6,400	$8,600	$5,500	$2,600	$0	
Disposal Cost Per Cubic Foot ($)		$11.00					$11.00	$11.00	$11.00	$11.00	$11.00	$11.00	
Quantity Per Truck Load (Yds^3)		20.0					20.0	20.0	20.0	20.0	20.0	20.0	
Quantity Per Truck Load (Ft^3)		540					540	540	540	540	540	540	
Disposal Cost ($)		$87,318					$87,318	$38,016	$51,084	$32,670	$15,444	$0	
Total Transportation & Disposal ($)	$0	$102,018	$0	$0	$0	$0	$102,018	$44,416	$59,684	$38,170	$18,044	$0	
TOTAL SLUDGE COST ($)	$0	$105,546	$0	$0	$0	$0	$105,546	$45,952	$61,748	$39,490	$18,668	$0	$376,950
POND LINER:													
Total Pond Area (Acres)		1.72					2.17	1.10	1.10	1.10	1.10	0.00	
Total Pond Area (Ft^2)		74923.2					94525.2	47916	47916	47916	47916	0	
Factor For Sloping Sides		20.0%					20.0%	20.0%	20.0%	20.0%	20.0%	0.0%	
Total Liner Area (Ft^2)		89908					113430	57499	57499	57499	57499	0	
Liner Thickness (Millimeters)		30					30	30	30	30	30	0	
Liner Thickness (Inches)		0.1181					0.1181	0.1181	0.1181	0.1181	0.1181	0	
Liner Thickness (Ft)		0.0098					0.0098	0.0098	0.0098	0.0098	0.0098	0	
"Swell" Factor		25.0%					25.0%	25.0%	25.0%	25.0%	25.0%	0.0%	
Liner Volume (Ft^3)		1101					1390	704	704	704	704	0	
Truck Loads of Liner		2.0					2.6	1.3	1.3	1.3	1.3	0.0	
Liner Handling Cost ($)													
Labor Crew Cost per Hour ($)		$90					$90	$90	$90	$90	$90	$0	
Hours per Load		2.0					2.0	2.0	2.0	2.0	2.0	0.0	
Liner Handling Cost Per Load ($)		$180.00					$180.00	$180.00	$180.00	$180.00	$180.00	$0.00	
Total Liner Handling Cost ($)	$0	$360	$0	$0	$0	$0	$468	$234	$234	$234	$234	$0	
Transportation & Disposal													
Percent To Be Shipped to Licensed Site		100.0%					100.0%	100.0%	100.0%	100.0%	100.0%	100.0%	
Transportation Cost per Truckload		$1,000					$1,000	$1,000	$1,000	$1,000	$1,000	$1,000	
Transportation Cost ($)		$2,000					$2,600	$1,300	$1,300	$1,300	$1,300	$0	
Disposal Cost Per Cubic Foot ($)		$11.00					$11.00	$11.00	$11.00	$11.00	$11.00	$11.00	
Quantity Per Truck Load (Ft^3)		540					540	540	540	540	540	540	
Disposal Cost ($)		$11,880					$15,444	$7,722	$7,722	$7,722	$7,722	$0	
Total Transportation & Disposal ($)	$0	$13,880	$0	$0	$0	$0	$18,044	$9,022	$9,022	$9,022	$9,022	$0	
TOTAL LINER COST ($)	$0	$14,240	$0	$0	$0	$0	$18,512	$9,256	$9,256	$9,256	$9,256	$0	$69,776
POND BACKFILL:													
Backfill required (Yds^3)	8740	8580	8740	8580	2517	14617	16319	9048	9048	9048	9048	18070	
Backfill Cost ($/$Yd^3$)	$2.00	$2.00	$2.00	$2.00	$2.00	$2.00	$2.00	$2.00	$2.00	$2.00	$2.00	$2.00	
TOTAL BACKFILL COST ($)	$17,480	$17,160	$17,480	$17,160	$5,034	$29,234	$32,638	$18,096	$18,096	$18,096	$18,096	$36,140	$244,710
RADIATION SURVEY													
Areal required (acres)		1.72		1.72			2.17	1.10	1.10	1.10	1.10	0	
Survey Cost ($/acre)	$520.00	$520.00	$520.00	$520.00	$520.00	$520.00	$520.00	$520.00	$520.00	$520.00	$520.00	$520.00	
TOTAL SURVEY COST ($)	$0	$894	$0	$894	$0	$0	$1,128	$572	$572	$572	$572	$0	$5,204
LEAK DETECTION SYSTEM REMOVAL													
Volume of Gravel and Piping (Ft^3) (Assume 3")													
Quantity per Truckload (Ft^3)													
Quantity to be Shipped to Licensed Site (Loads)													
Transportation Cost per Truckload													
Transportation Cost ($)													
Handling Cost per load													
Disposal Fee per Cubic Foot ($)													
Disposal Cost ($)													

COGEMA Mining, Inc.
2007 Restoration and Reclamation Costs
Wyoming Operations
WORKSHEET 4

	Irigaray							Christensen					
POND RECLAMATION COST	Pond A	Pond B	Pond C	Pond D	Pond E	Pond RA	Pond RB	Brine Pond 1	Brine Pond 2	Brine Pond 3	Brine Pond 4	Permeate Pond	
TOTAL LEAK DETECTION SYSTEM REMOVAL	$0	$0	$0	$0	$0	$0	$0	$0	$0	$0	$0	$0	$0
TOTAL POND RECLAMATION COST	$17,480	$137,840	$17,480	$18,054	$5,034	$29,234	$157,824	$73,876	$89,672	$67,414	$46,592	$36,140	$696,640

SUMMARY - IRIGARAY:

TOTAL SLUDGE COST ($)	$211,092
TOTAL LINER COST ($)	$32,752
TOTAL BACKFILL COST ($)	$136,186
TOTAL RADIATION SURVEY COST ($)	$2,916
LEAK DETECTION SYSTEM REMOVAL	$0
TOTAL POND RECLAMATION COST	$382,946

SUMMARY - CHRISTENSEN:

TOTAL SLUDGE COST ($)	$165,858
TOTAL LINER COST ($)	$37,024
TOTAL BACKFILL COST ($)	$108,524
TOTAL RADIATION SURVEY COST ($)	$2,288
LEAK DETECTION SYSTEM REMOVAL	$0
TOTAL POND RECLAMATION COST	$313,694
TOTAL PROJECT COST - CR and IR ($)	$696,640

COGEMA Mining, Inc.
2007 Restoration and Reclamation Costs
Wyoming Operations
WORKSHEET 5

WELL PLUGGING AND ABANDONMENT	Irigaray				Christensen			
	Mine Units #1 Thru #9	517 USMT Test Sites	Monitor/ Trend	Sub Total	Mine Units #2 Thru #7	Monitor/ Trend	Misc. Regional	Sub Total
Number of Wells	58	11	0	69	2379	327	137	2843
Average Depth	250	250	250		450	450	410	
Average Diameter	4.5	4.5	4.5		4.5	4.5	4.5	
Materials								
Bentonite Chips Required (Ft^3/Well)	11.4	11.4	11.4		11.4	11.4	11.4	
Bags of Chips Required/Well	15.0	15.0	15.0		16.0	16.0	15.0	
Cost Per Bag ($)	$4.50	$4.50	$4.50		$4.50	$4.50	$4.50	
Cost/Well Bentonite Chips ($)	$67.50	$67.50	$67.50		$72.00	$72.00	$67.50	
Gravel Fill Required (Ft^3/Well)	15.7	15.7	15.7		33.6	33.6	33.6	
Gravel Fill Required (Yd^3/Well)	0.58	0.58	0.58		1.24	1.24	1.24	
Cost of Gravel/Yd^3 ($)	$20.00	$20.00	$20.00		$20.00	$20.00	$20.00	
Cost/Well Gravel Fill ($)	$11.63	$11.63	$11.63		$24.89	$24.89	$24.89	
Cement Cone/Markers Req'd/Well	1.0	1.0	1.0		1.0	1.0	1.0	
Cost of Cement Cones/Markers ($)	$4.00	$4.00	$4.00		$4.00	$4.00	$4.00	
Total Materials Cost per Well	$83.13	$83.13	$83.13		$100.89	$100.89	$96.39	
Labor								
Hours Required per Well	1.0	1.0	1.0		1.0	1.0	1.0	
Labor Cost per Hour	$60.00	$60.00	$60.00		$60.00	$60.00	$60.00	
Total Labor Cost per Well ($)	$60.00	$60.00	$60.00		$60.00	$60.00	$60.00	
Equipment Rental								
Hours Required per Well	1.0	1.0	1.0		1.0	1.0	1.0	
Backhoe w/Operator Cost/Hr ($)	$38.50	$38.50	$38.50		$38.50	$38.50	$38.50	
Total Equipment Cost per Well ($)	$38.50	$38.50	$38.50		$38.50	$38.50	$38.50	
Total Cost per Well ($)	$181.63	$181.63	$181.63		$199.39	$199.39	$194.89	
TOTAL WELL ABANDONMENT COST ($)	$10,535	$1,998	$0	$12,532	$474,346	$65,200	$26,700	$566,246
GRAND TOTAL IRIGARAY AND CHRISTENSEN								$578,779

COGEMA Mining, Inc.
2007 Restoration and Reclamation Costs
Wyoming Operations
WORKSHEET 6

WELLFIELD EQUIPMENT REMOVAL & DISPOSAL	Irigaray Mine Unit(s) #1 Thru #9	Christensen Mine Units #2 Thru #4	Christensen Mine Unit #5	Christensen Mine Unit #6	Christensen Mine Unit #7	Christensen Mine Unit #8	Total Christensen & Irigaray
I Wellfield Piping							
A. Removal							
Length/Well (Ft)	100	300	300	300			
Total Number of Wells	602	1021	494	446			
Total Quantity (Ft)	60200	306300	148200	133800			
Cost of Removal ($/Ft)	$0.202	$0.202	$0.202	$0.202			
Cost of Removal ($)	$12,160	$61,873	$29,936	$27,028			$130,997
Average OD (Inches)	3.0	3.0	3.0	3.0			
Chipped Volume Reduction (Ft^3/Ft)	0.016	0.016	0.016	0.016			
Chipped Volume (Ft^3)	963	4,901	2,371	2,141			
Quantity Per Truck Load (Ft^3)	540	540	540	540			
Total Number of Truck Loads	1.8	9.1	4.4	4.0			
B. Survey & Decontamination							
Percent Requiring Decontamination	0%	0%	0%	0%			
Loads for Decontamination	0.0	0.0	0.0	0.0			
Cost for Decontamination ($/Load)	$435.00	$435.00	$435.00	$435.00			
Cost for Decontamination ($)	$0	$0	$0	$0			$0
C. Transport & Disposal							
1.) Landfill							
a. Transportation							
Percent To Be Shipped	0.0%	0.0%	0.0%	0.0%			
Loads To Be Shipped	0.0	0.0	0.0	0.0			
Transportation Cost per Load	$160	$160	$160	$160			
Transportation Cost ($)	$0	$0	$0	$0			$0
b. Disposal							
Disposal Fee Per Yd^3	$12.00	$12.00	$12.00	$12.00			
Yds^3 Per Load	20	20	20	20			
Disposal Cost ($)	$0	$0	$0	$0			
Total Cost - Landfill	$0	$0	$0	$0			$0
2.) Licensed Site							
a. Transportation							
Percent To Be Shipped	100.0%	100.0%	100.0%	100.0%			
Loads To Be Shipped	1.8	9.1	4.4	4.0			
Transportation Cost per Load	$1,000	$1,000	$1,000	$1,000			
Transportation Cost ($)	$1,800	$9,100	$4,400	$4,000			$19,300
b. Disposal							
Disposal Cost Per Ft^3	$11.00	$11.00	$11.00	$11.00			
Disposal Fee Per Yd^3	$297.00	$297.00	$297.00	$297.00			
Quantity Per Truck Load (Yds^3)	20	20	20	20			
Disposal Cost ($)	$10,692	$54,054	$26,136	$23,760			$114,642
Total Cost - Licensed Site	$12,492	$63,154	$30,536	$27,760			$133,942
Total Cost - Transport & Disposal	$12,492	$63,154	$30,536	$27,760			$133,942
Total Cost - WF Piping Removal & Disposal	$24,652	$125,027	$60,472	$54,788	$0	$0	$264,939
II Production Well Pumps							
A. Pump and Tubing Removal							
Number of Production Wells	424	443	217	202			
Cost of Removal ($/well)	$22.50	$22.50	$22.50	$22.50			
Cost of Removal ($)	$0	$9,968	$4,883	$4,545			$19,395
Number of Pumps Per Truck Load	180	180	180	180			
Number of Truck Loads (Pumps)	0.0	2.5	1.2	1.1			
B. Survey & Decontamination (Pumps)							
Percent Requiring Decontamination	50.0%	50.0%	50.0%	50.0%			
Loads for Decontamination	0.0	1.3	0.6	0.6			
Cost for Decontamination ($/Load)	$435.00	$435.00	$435.00	$435.00			
Cost for Decontamination ($)	$0	$566	$261	$261			$1,088
C. Tubing Volume Reduction & Loading							
Length per Well (Ft)	100	300	300	450			
Total Quantity (Ft)	42,400	132,900	65,100	90,900			
Cost of Removal ($/Ft)	$0.025	$0.025	$0.025	$0.025			
Cost of Removal ($)	$0	$3,323	$1,628	$2,273			$7,223
Average OD (Inches)	3.0	3.0	3.0	3.0			
Chipped Volume Reduction (Ft^3/Ft)	0.016	0.016	0.016	0.016			
Chipped Volume (Ft^3)	678	2,126	1,042	1,454			

COGEMA Mining, Inc.
2007 Restoration and Reclamation Costs
Wyoming Operations
WORKSHEET 6

WELLFIELD EQUIPMENT REMOVAL & DISPOSAL	Irigaray Mine Unit(s) #1 Thru #9	Christensen Mine Units #2 Thru #4	Christensen Mine Unit #5	Christensen Mine Unit #6	Christensen Mine Unit #7	Christensen Mine Unit #8	Total Christensen & Irigaray
Quantity per Truckload (Ft^3)	540	540	540	540			
Number of Truck Loads	1.3	3.9	1.9	2.7			
D. Transport & Disposal							
1.) Landfill							
a. Transportation							
Percent To Be Shipped (Pumps)	50.0%	50.0%	50.0%	50.0%			
Loads To Be Shipped	0.0	1.3	0.6	0.6			
Transportation Cost per Load	$160	$160	$160	$160			
Transportation Cost ($)	$0	$208	$96	$96			$400
b. Disposal							
Disposal Fee Per Yd^3	$12.00	$12.00	$12.00	$12.00			
Yds^3 Per Load	20	20	20	20			
Disposal Cost ($)	$0	$312	$144	$144			$600
Total Cost - Landfill	$0	$520	$240	$240			$1,000
2.) Licensed Site							
a. Transportation							
Percent To Be Shipped (Pumps)	50.0%	50.0%	50.0%	50.0%			
Percent To Be Shipped (Tubing)	100.0%	100.0%	100.0%	100.0%			
Loads To Be Shipped	1.3	5.2	2.5	3.2			
Transportation Cost per Load	$1,000	$1,000	$1,000	$1,000			
Transportation Cost ($)	$1,256	$5,188	$2,529	$3,243			$12,216
b. Disposal							
Disposal Cost Per Ft^3	$11.00	$11.00	$11.00	$11.00			
Disposal Fee Per Yd^3	$297.00	$297.00	$297.00	$297.00			
Quantity Per Truck Load (Yds^3)	20	20	20	20			
Disposal Cost ($)	$7,462	$30,815	$15,022	$19,265			$72,565
Total Cost - Licensed Site	$8,719	$36,003	$17,550	$22,509			$84,781
Total Cost - Transport & Disposal	$8,719	$36,523	$17,790	$22,749			$85,781
Total Cost - Pump Removal & Disposal	$8,719	$50,379	$24,561	$29,827	$0	$0	$113,486
III Surface Trunkline Piping							
A. Removal							
Total Quantity (Ft)	44700	0	0	0	0	0	
Cost of Removal ($/Ft)	$0.146	$0.146	$0.146	$0.146	$0.146	$0.146	
Cost of Removal ($)	$0	$0	$0	$0	$0	$0	$0
Average OD (Inches)	8.750	8.750	0.000	0.000	0.000	0.000	
Chipped Volume Reduction (Ft^3/Ft)	0.088	0.088	0.088	0.088	0.088	0.088	
Chipped Volume (Ft^3)	3934	0	0	0	0	0	
Quantity Per Truck Load (Ft^3)	540	540	540	540	0	0	
Total Number of Truck Loads	7.3	0.0	0.0	0.0	0.0	0.0	
B. Survey & Decontamination							
Percent Requiring Decontamination	0.0%	0.0%	0.0%	0.0%	0.0%	0.0%	
Loads for Decontamination	0.0	0.0	0.0	0.0	0.0	0.0	
Cost for Decontamination ($/Load)	$435.00	$435.00	$435.00	$435.00	$0.00	$0.00	
Cost for Decontamination ($)	$0	$0	$0	$0	$0	$0	$0
C. Transport & Disposal							
1.) Landfill							
a. Transportation							
Percent To Be Shipped	0.0%	0.0%	0.0%	0.0%	0.0%	0.0%	
Loads To Be Shipped	0.0	0.0	0.0	0.0	0.0	0.0	
Transportation Cost per Load	$160	$160	$160	$160	$0	$0	
Transportation Cost ($)	$0	$0	$0	$0	$0	$0	$0
b. Disposal							
Disposal Fee Per Yd^3	$12.00	$12.00	$12.00	$12.00	$0.00	$0.00	
Yds^3 Per Load	20	20	20	20	0	0	
Disposal Cost ($)	$0	$0	$0	$0	$0	$0	$0
Total Cost - Landfill	$0	$0	$0	$0	$0	$0	$0
2.) Licensed Site							
a. Transportation							
Percent To Be Shipped	100.0%	100.0%	100.0%	100.0%	100.0%	100.0%	
Loads To Be Shipped	7.3	0.0	0.0	0.0	0.0	0.0	
Transportation Cost per Load	$1,000	$1,000	$1,000	$1,000	$0	$0	
Transportation Cost ($)	$7,284	$0	$0	$0	$0	$0	$7,284
b. Disposal							
Disposal Cost Per Ft^3	$11.00	$11.00	$11.00	$11.00	$0.00	$0.00	
Disposal Fee Per Yd^3	$297.00	$297.00	$297.00	$297.00	$0.00	$0.00	

COGEMA Mining, Inc.
2007 Restoration and Reclamation Costs
Wyoming Operations
WORKSHEET 6

WELLFIELD EQUIPMENT REMOVAL & DISPOSAL	Irigaray Mine Unit(s) #1 Thru #9	Christensen Mine Units #2 Thru #4	Christensen Mine Unit #5	Christensen Mine Unit #6	Christensen Mine Unit #7	Christensen Mine Unit #8	Total Christensen & Irigaray
Quantity Per Truck Load (Yds³)	20	20	20	20	0	0	
Disposal Cost ($)	$43,270	$0	$0	$0	$0	$0	$43,270
Total Cost - Licensed Site	$50,554	$0	$0	$0	$0	$0	$50,554
Total Cost - Transport & Disposal	$50,554	$0	$0	$0	$0	$0	$50,554
Total Cost - Surface Trunkline Removal & Disposal	$50,554	$0	$0	$0	$0	$0	$50,554
IV Buried Trunkline							
A. Removal							
Total Quantity (Ft)	7300	11565	24500	47000	0	0	
Cost of Removal ($/Ft)	$3.12	$3.12	$3.12	$3.12	$3.12	$3.12	
Cost of Removal ($)	$22,776	$36,083	$76,440	$146,640	$0	$0	$281,939
Average OD (Inches)	8.750	8.750	8.750	12.000	12.000	12.000	
Chipped Volume Reduction (Ft³/Ft)	0.088	0.088	0.088	0.130	0.130	0.130	
Chipped Volume (Ft³)	642	1018	2156	6110	0	0	
Quantity Per Truck Load (Ft³)	540	540	540	540	0	0	
Number of Truck Loads	1.2	1.9	4.0	11.3	0.0	0.0	
B. Survey & Decontamination							
Percent Requiring Decontamination	0.0%	0.0%	0.0%	0.0%	0.0%	0.0%	
Loads for Decontamination	0.0	0.0	0.0	0.0	0.0	0.0	
Cost for Decontamination. ($/Load)	$435.00	$435.00	$435.00	$435.00	$0.00	$0.00	
Cost for Decontamination. ($)	$0	$0	$0	$0	$0	$0	$0
C. Transport & Disposal							
1.) Landfill							
a. Transportation							
Percent To Be Shipped	0.0%	0.0%	0.0%	0.0%	0.0%	0.0%	
Loads To Be Shipped	0.0	0.0	0.0	0.0	0.0	0.0	
Transportation Cost per Load	$160	$160	$160	$160	$0	$0	
Transportation Cost ($)	$0	$0	$0	$0	$0	$0	$0
b. Disposal							
Disposal Fee Per Yd³	$12.00	$12.00	$12.00	$12.00	$0.00	$0.00	
Yds³ Per Load	20	20	20	20	0	0	
Disposal Cost ($)	$0	$0	$0	$0	$0	$0	$0
Total Cost - Landfill	$0	$0	$0	$0	$0	$0	$0
2.) Licensed Site							
a. Transportation							
Percent To Be Shipped	100.0%	100.0%	100.0%	100.0%	100.0%	100.0%	
Loads To Be Shipped	1.2	1.9	4.0	11.3	0.0	0.0	
Transportation Cost per Load	$1,000	$1,000	$1,000	$1,000	$0	$0	
Transportation Cost ($)	$1,200	$1,900	$4,000	$11,300	$0	$0	$18,400
b. Disposal							
Disposal Cost Per Ft³	$11.00	$11.00	$11.00	$11.00	$0.00	$0.00	
Disposal Fee Per Yd³	$297.00	$297.00	$297.00	$297.00	$0.00	$0.00	
Quantity Per Truck Load (Yds³)	20	20	20	20	0	0	
Disposal Cost ($)	$7,128	$11,286	$23,760	$67,122	$0	$0	$109,296
Total Cost - Licensed Site	$8,328	$13,186	$27,760	$78,422	$0	$0	$127,696
Total Cost - Transport & Disposal	$8,328	$13,186	$27,760	$78,422	$0	$0	$127,696
Total Cost - Buried Trunkline Removal & Disposal	$31,104	$49,269	$104,200	$225,062	$0	$0	$409,635
V Manholes							
A. Removal							
Total Quantity	5	8	5	11	0	0	
Cost of Removal ($ Each)	$117.00	$117.00	$117.00	$117.00	$117.00	$117.00	
Cost of Removal ($)	$585	$936	$585	$1,287	$0	$0	$3,393
Quantity Per Truck Load	10	10	10	10	10	10	
Number of Truck Loads	0.5	0.8	0.5	1.1	0.0	0.0	
B. Survey & Decontamination							
Percent Requiring Decontamination	0.0%	0.0%	0.0%	0.0%	0.0%	0.0%	
Loads for Decontamination	0.0	0.0	0.0	0.0	0.0	0.0	
Cost for Decontamination ($/Load)	$435.00	$435.00	$435.00	$435.00	$0.00	$0.00	
Cost for Decontamination ($)	$0	$0	$0	$0	$0	$0	$0
C. Transport & Disposal							
1.) Landfill							
a. Transportation							
Percent To Be Shipped	0.0%	0.0%	0.0%	0.0%	0.0%	0.0%	
Loads To Be Shipped	0.0	0.0	0.0	0.0	0.0	0.0	
Transportation Cost per Load	$160	$160	$160	$160	$0	$0	

COGEMA Mining, Inc.
2007 Restoration and Reclamation Costs
Wyoming Operations
WORKSHEET 6

WELLFIELD EQUIPMENT REMOVAL & DISPOSAL	Irigaray Mine Unit(s) #1 Thru #9	Christensen Mine Units #2 Thru #4	Christensen Mine Unit #5	Christensen Mine Unit #6	Christensen Mine Unit #7	Christensen Mine Unit #8	Total Christensen & Irigaray
Transportation Cost ($)	$0	$0	$0	$0	$0	$0	$0
b. Disposal							
Disposal Fee Per Yd³ ($)	$12.00	$12.00	$12.00	$12.00	$0.00	$0.00	
Yds³ Per Load	20	20	20	20	0	0	
Disposal Cost ($)	$0	$0	$0	$0	$0	$0	$0
Total Cost - Landfill	$0	$0	$0	$0	$0	$0	$0
2.) Licensed Site							
a. Transportation							
Percent To Be Shipped	0.0%	0.0%	0.0%	0.0%	0.0%	0.0%	
Loads To Be Shipped	0.0	0.0	0.0	0.0	0.0	0.0	
Transportation Cost per Load	$1,000	$1,000	$1,000	$1,000	$0	$0	
Transportation Cost ($)	$0	$0	$0	$0	$0	$0	$0
b. Disposal							
Disposal Cost Per Ft³	$11.00	$11.00	$11.00	$11.00	$0.00	$0.00	
Disposal Fee Per Yd³	$297.00	$297.00	$297.00	$297.00	$0.00	$0.00	
Quantity Per Truck Load (Yds³)	20	20	20	20	0	0	
Disposal Cost ($)	$0	$0	$0	$0	$0	$0	$0
Total Cost - Licensed Site	$0	$0	$0	$0	$0	$0	$0
Total Cost - Transport & Disposal	$0	$0	$0	$0	$0	$0	$0
Total Cost Manhole Removal & Disposal	$585	$936	$585	$1,287	$0	$0	$3,393
TOTAL COST - WELLFIELD EQUIP REMOVAL & DISP	$115,614	$225,610	$189,819	$310,964	$0	$0	$842,007

COGEMA Mining, Inc.
2007 Restoration and Reclamation Costs
Wyoming Operations
WORKSHEET 7

TOPSOIL REPLACEMENT & REVEGETATION	Irigaray Mine Unit(s) #1 Thru #9	Christensen Mine Units #2 Thru #4	Christensen Mine Unit #5	Christensen Mine Unit #6	Christensen Mine Unit #7	Christensen Mine Unit #8	Total Christensen & Irigaray
I Process Plant and Office Building							
A. Topsoil Handling & Grading							
Affected Area (Acres)	5.0	2.5	0.0	0.0	0.0	0.0	
Average Affected Thickness (Ins)	12.0	12.0	0.0	0.0	0.0	0.0	
Topsoil Volume (Yds³)	8067	4033	0	0	0	0	
Unit Cost - Haul/Place ($/Yd³)	$2.00	$2.00	$2.00	$2.00	$2.00	$2.00	
Topsoil Handling Cost ($)	$16,133	$8,067	$0	$0	$0	$0	
Unit Cost - Grading ($/Ac)	$38.45	$38.45	$38.45	$38.45	$38.45	$38.45	
Grading Cost ($)	$192	$96	$0	$0	$0	$0	
Sub Total - Topsoil	$16,326	$8,163	$0	$0	$0	$0	$24,488
B. Radiation Survey & Soil Analysis							
Unit Cost ($/Ac)	$520.00	$520.00	$520.00	$520.00	$520.00	$520.00	
Sub Total - Survey & Analysis	$2,600	$1,300	$0	$0	$0	$0	$3,900
C. Revegetation							
Fertilizer ($/Ac)	$46.49	$46.49	$46.49	$46.49	$46.49	$46.49	
Seeding Prep & Seeding ($/Ac)	$168.68	$168.68	$168.68	$168.68	$168.68	$168.68	
Mulching & Crimping ($/Ac)	$276.54	$276.54	$276.54	$276.54	$276.54	$276.54	
Sub Total Cost/Acre	$491.71	$491.71	$491.71	$491.71	$491.71	$491.71	
Sub Total - Revegation	$2,459	$1,229	$0	$0	$0	$0	$3,688
Sub Total - Process Plant and Office Bldg.	$21,384	$10,692	$0	$0	$0	$0	$32,076
II Ponds							
A. Topsoil Handling & Grading							
Affected Area (Acres)	20.0	12.0	0.0	0.0	0.0	0.0	
Average Affected Thickness (Ins)	12	12	0	0	0	0	
Topsoil Volume (Yds³)	32267	19360	0	0	0	0	
Unit Cost - Haul/Place ($/Yd³)	$2.00	$2.00	$2.00	$2.00	$2.00	$2.00	
Topsoil Handling Cost ($)	$64,533	$38,720	$0	$0	$0	$0	
Unit Cost - Grading ($/Ac)	$38.45	$38.45	$38.45	$38.45	$38.45	$38.45	
Grading Cost ($)	$769	$461	$0	$0	$0	$0	
Sub Total - Topsoil	$65,302	$39,181	$0	$0	$0	$0	$104,484
B. Radiation Survey & Soil Analysis							
Unit Cost ($/Ac)	$520.00	$520.00	$520.00	$520.00	$520.00	$520.00	
Sub Total - Survey & Analysis	$10,400	$6,240	$0	$0	$0	$0	$16,640
C. Revegation							
Fertilizer ($/Ac)	$46.49	$46.49	$46.49	$46.49	$46.49	$46.49	
Seeding Prep & Seeding ($/Ac)	$168.68	$168.68	$168.68	$168.68	$168.68	$168.68	
Mulching & Crimping ($/Ac)	$276.54	$276.54	$276.54	$276.54	$276.54	$276.54	
Sub Total Cost/Acre	$491.71	$491.71	$491.71	$491.71	$491.71	$491.71	
Sub Total - Revegation	$9,834	$5,901	$0	$0	$0	$0	$15,735
Sub Total - Ponds	$85,537	$51,322	$0	$0	$0	$0	$136,858
III Wellfields							
A. Topsoil Handling & Grading							
Affected Area (Acres)	40.0	55.0	30.0	50.0	35.0	40.0	
Average Affected Thickness (Ins)	3.5	0.0	0.0	0.0	0.0	0.0	
Topsoil Volume (Yds³)	18822	0	0	0	0	0	
Unit Cost - Haul/Place ($/Yd³)	$2.00	$2.00	$2.00	$2.00	$2.00	$2.00	
Topsoil Handling Cost ($)	$37,644	$0	$0	$0	$0	$0	
Unit Cost - Grading ($/Ac)	$38.45	$38.45	$38.45	$38.45	$38.45	$0.00	
Grading Cost ($)	$1,538	$2,115	$1,154	$1,923	$1,346	$0	
Sub Total - Topsoil	$39,182	$2,115	$1,154	$1,923	$1,346	$0	$45,719
B. Radiation Survey & Soil Analysis							
Unit Cost ($/Ac)	$520.00	$520.00	$520.00	$520.00	$0.00	$0.00	
Sub Total - Survey & Analysis	$20,800	$28,600	$15,600	$26,000	$0	$0	$91,000
C: Spill Cleanup							
Affected Area (Acres)		0.036	0	0	0	0	
Affected Area (ft²)		1,568	0	0	0	0	
Average Affected Thickness (ft)		0.25	0	0	0	0	
Affected Volume (ft³)		392	0	0	0	0	
Quantity per Truckload (ft³)		540	540	540	540	540	
Quantity to be Shipped (Loads)		0.7	0.0	0.0	0.0	0.0	
Transportation Cost per Load		$1,000	$1,000	$1,000	$1,000	$1,000	
Transportation Cost ($)		$726	$0	$0	$0	$0	
Handling Cost ($240/load)		$174	$0	$0	$0	$0	
Disposal Fee per Cubic Foot ($)		$3.70	$3.70	$3.70	$3.70	$3.70	
Disposal Cost ($)		$1,450	$0	$0	$0	$0	

COGEMA Mining, Inc.
2007 Restoration and Reclamation Costs
Wyoming Operations
WORKSHEET 7

TOPSOIL REPLACEMENT & REVEGETATION	Irigaray Mine Unit(s) #1 Thru #9	Christensen Mine Units #2 Thru #4	Christensen Mine Unit #5	Christensen Mine Unit #6	Christensen Mine Unit #7	Christensen Mine Unit #8	Total Christensen & Irigaray
Sub Total - Spill Cleanup	$0	$2,351	$0	$0	$0	$0	$2,351
D. Revegation							
Fertilizer ($/Ac)	$46.49	$46.49	$46.49	$46.49	$46.49	$46.49	
Seeding Prep & Seeding ($/Ac)	$168.68	$168.68	$168.68	$168.68	$168.68	$168.68	
Mulching & Crimping ($/Ac)	$276.54	$276.54	$276.54	$276.54	$276.54	$276.54	
Sub Total Cost/Acre	$491.71	$491.71	$491.71	$491.71	$491.71	$491.71	
Sub Total - Revegation	$19,668	$27,044	$14,751	$24,586	$17,210	$19,668	$122,928
Sub Total - Wellfields ($)	$79,651	$60,109	$31,505	$52,508	$18,556	$19,668	$261,997
IV Roads							
A. Topsoil Handling & Grading							
Affected Area (Acres)	25.0	20.0	15.0	21.0	0.0	0.0	
Average Affected Thickness (Ins)	12	12	12	12	12	12	
Topsoil Volume (Yds³)	40333	32267	24200	33880	0	0	
Unit Cost - Haul/Place ($/Yd³)	$2.00	$2.00	$2.00	$2.00	$2.00	$2.00	
Topsoil Handling Cost ($)	$80,667	$64,533	$48,400	$67,760	$0	$0	
Unit Cost - Grading ($/Ac)	$38.45	$38.45	$38.45	$38.45	$38.45	$38.45	
Grading Cost ($)	$961	$769	$577	$807	$0	$0	
Sub Total - Topsoil	$81,628	$65,302	$48,977	$68,567	$0	$0	$264,474
B. Radiation Survey & Soil Analysis							
Unit Cost ($/Ac)	$520.00	$520.00	$520.00	$520.00	$0.00	$0.00	
Sub Total - Survey & Analysis	$13,000	$10,400	$7,800	$10,920	$0	$0	$42,120
C. Revegation							
Fertilizer ($/Ac)	$46.49	$46.49	$46.49	$46.49			
Seeding Prep & Seeding ($/Ac)	$168.68	$168.68	$168.68	$168.68			
Mulching & Crimping ($/Ac)	$276.54	$276.54	$276.54	$276.54			
Sub Total Cost/Acre	$491.71	$491.71	$491.71	$491.71			
Sub Total - Revegation	$12,293	$9,834	$7,376	$10,326	$0	$0	$39,829
Sub Total - Roads ($)	$106,921	$85,537	$64,152	$89,813	$0	$0	$346,423
V Other							
A. Topsoil Handling & Grading							
Affected Area (Acres)	41.0	19.0	5.0	5.0	0.0	0.0	
Average Affected Thickness (Ins)	0.0	0.0	0	0	0	0	
Topsoil Volume (Yds³)	0	0	0	0	0	0	
Unit Cost - Haul/Place ($/Yd³)	$2.00	$2.00	$2.00	$2.00	$2.00	$2.00	
Topsoil Handling Cost ($)	$0	$0	$0	$0	$0	$0	
Unit Cost - Grading ($/Ac)	$38.45	$38.45	$38.45	$38.45	$38.45	$0.00	
Grading Cost ($)	$1,576	$731	$192	$192	$0	$0	
Sub Total - Topsoil	$1,576	$731	$192	$192	$0	$0	$2,692
B. Radiation Survey & Soil Analysis							
Unit Cost ($/Ac)	$520.00	$520.00	$520.00	$520.00	$0.00	$0.00	
Sub Total - Survey & Analysis	$21,320	$9,880	$2,600	$2,600	$0	$0	$36,400
C. Revegation							
Fertilizer ($/Ac)	$46.49	$46.49	$46.49	$46.49	$0.00	$0.00	
Seeding Prep & Seeding ($/Ac)	$168.68	$168.68	$168.68	$168.68	$0.00	$0.00	
Mulching & Crimping ($/Ac)	$276.54	$276.54	$276.54	$276.54	$0.00	$0.00	
Sub Total Cost/Acre	$491.71	$491.71	$491.71	$491.71	$0.00	$0.00	
Sub Total - Revegation	$20,160	$9,342	$2,459	$2,459	$0	$0	$34,420
Sub Total - Other	$43,057	$19,953	$5,251	$5,251	$0	$0	$73,511
VI Remedial Action							
A. Topsoil Handling & Grading							
Affected Area (Acres)	65.5	54.3	25.0	38.0	17.5	20.0	
Average Affected Thickness (Ins)	0.0	0.0	0.0	0.0	0.0	0.0	
Topsoil Volume (Yds³)	0	0	0	0	0	0	
Unit Cost - Haul/Place ($/Yd³)	$0.00	$0.00	$0.00	$0.00	$0.00	$0.00	
Topsoil Handling Cost ($)	$0	$0	$0	$0	$0	$0	
Unit Cost - Grading ($/Ac)	$0.00	$0.00	$0.00	$0.00	$0.00	$0.00	
Grading Cost ($)	$0	$0	$0	$0	$0	$0	
Sub Total - Topsoil	$0	$0	$0	$0	$0	$0	$0
B. Radiation Survey & Soil Analysis							
Unit Cost ($/Ac)	$0.00	$0.00	$0.00	$0.00	$0.00	$0.00	
Sub Total - Survey & Analysis	$0	$0	$0	$0	$0	$0	$0
C. Revegation							
Fertilizer ($/Ac)	$46.49	$46.49	$46.49	$46.49	$46.49	$46.49	
Seeding Prep & Seeding ($/Ac)	$168.68	$168.68	$168.68	$168.68	$0.00	$0.00	
Mulching & Crimping ($/Ac)	$276.54	$276.54	$276.54	$276.54	$0.00	$0.00	
Sub Total Cost/Acre	$491.71	$491.71	$491.71	$491.71	$46.49	$46.49	

COGEMA Mining, Inc.
2007 Restoration and Reclamation Costs
Wyoming Operations
WORKSHEET 7

TOPSOIL REPLACEMENT & REVEGETATION	Irigaray Mine Unit(s) #1 Thru #9	Christensen Mine Units #2 Thru #4	Christensen Mine Unit #5	Christensen Mine Unit #6	Christensen Mine Unit #7	Christensen Mine Unit #8	Total Christensen & Irigaray
Sub Total - Revegation	$32,207	$26,675	$12,293	$18,685	$814	$930	$91,603
Sub Total - Remedial Action	$32,207	$26,675	$12,293	$18,685	$814	$930	$91,603
TOTAL COST - TOPSOIL & REVEGETATION	$368,756	$254,288	$113,201	$166,257	$19,369	$20,598	$942,469

COGEMA Mining, Inc.
2007 Restoration and Reclamation Costs
Wyoming Operations
WORKSHEET 8

	MISCELLANEOUS RECLAMATION	Irigaray Mine Unit(s) #1 Thru #9	Christensen Mine Units #2 Thru #4	Christensen Mine Unit #5	Christensen Mine Unit #6	Christensen Mine Unit #7	Christensen Mine Unit #8	Total Christensen & Irigaray
I	Fence Removal & Disposal							
	Quantity (Feet)	15240	35260	20000	9000	0	0	
	Cost of Removal/Disposal ($/Ft)	$0.68	$0.68	$0.68	$0.68	$0.68	$0.68	
	Cost of Removal/Disposal ($)	$10,363	$23,977	$13,600	$6,120	$0	$0	$54,060
II	Powerline Removal & Disposal							
	Quantity (Feet)	9450	10565	18000	18000	0	0	
	Cost of Removal/Disposal ($/Ft)	$0.00	$0.00	$0.00	$0.00	$0.00	$0.00	
	Cost of Removal/Disposal ($)	$0	$0	$0	$0	$0	$0	$0
III	Powerpole Removal & Disposal							
	Quantity	25	30	60	60	0	0	
	Cost of Removal/Disposal ($/Each)	$0.00	$0.00	$0.00	$0.00	$0.00	$0.00	
	Cost of Removal/Disposal ($)	$0	$0	$0	$0	$0	$0	$0
IV	Transformer Removal & Disposal							
	Quantity	0	1	0	18	3	0	
	Cost of Removal/Disposal ($/Each)	$2,525	$2,525	$2,525	$619	$619	$619	
	Cost of Removal/Disposal ($)	$0	$2,525	$0	$11,142	$1,857	$0	$15,524
V	Booster Pump Assembly Removal & Disposal							
	Quantity	0	6	5	5	0	0	
	Cost of Removal/Disposal ($/Each)	$248	$248	$248	$248	$248	$248	
	Cost of Removal/Disposal ($)	$0	$1,488	$1,240	$1,240	$0	$0	$3,968
VI	Culvert Removal & Disposal							
	Quantity (Feet)	150	1200	1000	1000	0	0	
	Cost of Removal/Disposal ($/Ft)	$3.48	$3.48	$3.48	$3.48	$3.48	$3.48	
	Cost of Removal/Disposal ($)	$522	$4,176	$3,480	$3,480	$0	$0	$11,658
VII	Guardrail Removal							
	Quantity (Feet)	200	3000	0	0	0	0	
	Cost of Removal/Disposal ($/Ft)	$6.44	$6.44	$6.44	$6.44	$6.44	$6.44	
	Cost of Removal/Disposal ($)	$1,288	$19,320	$0	$0	$0	$0	$20,608
VIII	Low Water Stream Crossing							
	Quantity	0	1	1	0	0	0	
	Cost of Removal/Disposal ($/Each)	$4,500	$4,500	$4,500	$4,500	$4,500	$4,500	
	Cost of Removal/Disposal ($)	$0	$4,500	$4,500	$0	$0	$0	$9,000
IX	Utilities Cost							
	Quantity (Mos)	0	8	4	4	4	0	
	Cost Per Month ($/Month)	$65	$65	$65	$65	$65	$65	
	Total Cost ($)	$0	$520	$260	$260	$260	$0	$1,300
	TOTAL MISCELLANEOUS COST	$12,173	$56,506	$23,080	$22,242	$2,117	$0	$116,118

7.0 ENVIRONMENTAL EFFECTS

The environmental monitoring programs are used to ensure that the potential sources of land, water and air pollution are controlled and monitored. The program is presented in Section 5.O, Operations.

This section discusses and describes the degree of unavoidable environmental change, the short term and long term impacts due to the operation, and the consequences of possible accidents at the Irigaray and Christensen Ranch sites.

7.1 SITE PREPARATION AND CONSTRUCTION

All major facilities have been constructed at the Irigaray site including the process plant, ponds, roads and nine production well fields (which are now being decommissioned). Additional well fields may be constructed within the current permit boundary, and in the long term, outside of the permitted area, but any potential new wellfield development at Irigaray is beyond the scope of this license renewal submittal. Other construction at Irigaray may include the installation of a deep disposal well (two are presently permitted).

The Christensen Ranch satellite plant and most of the support facilities have already been constructed, including five out of six permitted ponds, and two deep injection wells for wastewater disposal. Five mine units have been constructed, but have undergone restoration. A report on the completed restoration of those mine units (2 through 6) has been submitted to the WDEQ and the NRC. Additionally, future mine units will be constructed in the Heldt Draw, North Prong, and Table Mountain areas. The original application for Christensen Ranch called for satellite plants at each of these areas. However, after eleven plus years of operational experience, COGEMA plans to operate only the existing satellite plant, using buried pipelines to connect with the future well field areas. Other potential construction planned for Christensen Ranch are roads to the new mine units, and the installation of the three remaining ponds for wastewater disposal.

Soils and vegetation will be affected by the construction and installation of the remaining lined evaporation and permeate storage impoundments at Christensen Ranch, as well as the installation of new mine units and construction of access routes. Construction of these facilities will have the primary effect of changing the present land use from cattle grazing and incidental wildlife use to a temporary mining use in the areas of potential disturbance. These facilities will create relatively small disturbances which are temporary in nature and which will be reclaimed to the original land use characteristics according to the Reclamation Plan. Increased sedimentation during construction will be temporary and will be minimized by the stabilization of the disturbed areas with seeding of an interim seed mix. Stabilization of the areas disturbed during ongoing operations is discussed in Section 3. Consequently, while the disturbances associated with the mining operations are unavoidable, there will be no long term irreversible effects from the preparation and construction of the various components of the mining operation. It is probable that the irregular and often narrow well field disturbances may, in some cases, enhance wildlife habitat for certain species by creating an increased edge effect along the perimeter and by adding temporary diversity to the area. Domestic livestock grazing may be temporarily interrupted on the operating areas.

7.1.1 PROCESS FACILITIES AND POND CONSTRUCTION

The Irigaray/Christensen Ranch terrain will be disturbed temporarily where the ponds and plant

facilities are placed, along sections of newly constructed access roads and where buried process lines are installed. Estimates and actual acreage of disturbance are provided for Irigaray and Christensen Ranch sites in Section 3.0. After groundwater restoration has been accomplished, the facilities will be decommissioned as described in the approved decommissioning plan (COGEMA, 2000). The surface disturbances will be reclaimed according to the reclamation plan described in Section 6.3 of the January, 1996 license renewal document.

7.1.2 WELL FIELD DISTURBANCES

Well field installations at the Irigaray site consist of 30 acres of production well fields, and a small area associated with the 5I7 R&D site (less than one acre of well field area). The existing Irigaray production wellfields are currently being decommissioned, and the 5I7 R&D site has been decommissioned.

Well field installations at the Christensen Ranch site will cause the majority of the surface disturbance created during mining. Well field mine units will, however, be disturbed to a lesser degree than other installations and will be withdrawn from grazing for a shorter period of time than other facilities. The surface disturbance of well field mining units will be reclaimed and returned to grazing use sequentially once the groundwater restoration has been approved. Mine units will continue to be installed to achieve and maintain the plant recovery rate (maximum of 4,000 gpm at Christensen). When the initial mine unit is depleted (mined out), restoration will commence and will continue sequentially as areas are mined out. The mining sequence will continue through the completion of mining, with the mine units being rotated back to various stages of restoration, and surface reclamation returning them to livestock production.

The total area disturbed by well fields at any given time will vary according to the mining schedule and the size of the mine units in operation. The amount of disturbance in a given well field will depend on surface relief and the degree of disturbance necessary for efficient installation and operation of the mine unit.

Each unit will be disturbed for approximately six years before surface reclamation is conducted. This time includes approximately three years for mining, and up to three years for groundwater restoration and stability monitoring. After surface reclamation has been achieved, the areas will be returned to grazing use.

7.2 OPERATIONAL EFFECTS

7.2.1 AIR QUALITY IMPACTS

The impacts of operations at the Irigaray site upon the air quality in the area are minimal. Fugitive dust will be released during travel on access roads to the site and within the well field areas. The amount of fugitive dust released during operations at the Irigaray recovery facility, where traffic in the past was greater than that for the current Christensen operations, was calculated to be 89.5 tons/year (particle size <30 μm) within the permit boundary. (Reference: Section M2, WDEQ Application for Permit to Mine, No. 478). This estimate can be used as a worst-case estimate for the Christensen Ranch operations because of the small number of employees commuting to the site and the limited scope of the process operations and requirements. Computer modeling conducted in 1978 of the Irigaray particulate emissions showed that the maximum total predicted concentrations due to all influences, including fugitive dust and uranium particulate from the Irigaray dryer, was only

32 g/m^3 (includes a background of 20 g/m^3). This is well below the most restrictive secondary National Ambient Air Quality Standard of 60 g/m^3. The Christensen Ranch total particulate emissions should be well below the Irigaray estimates. Efforts to reduce fugitive dust are made when it becomes apparent that it is a problem. This has been accomplished by applying dust control media (only water to date) to the access roads.

Installation of future facilities at the Christensen Ranch plant site will contribute some amount of fugitive dust to the atmosphere during the construction period. This contribution will be localized and temporary, therefore, should not significantly affect air quality in the region. The release of diesel emissions from drilling and construction equipment will be minor and of short duration.

Air quality at the site and surrounding areas has not been impacted by operational activities. There have been no atmospheric emissions from the facility other than fugitive dust, some soda ash emissions during loading of the silo and radon gas, which will be discussed in Section 7.3 following. The following table estimates the total emissions from the Irigaray facility assuming dryer operations at 8,760 hours per year.

	1979 CT-223 Permit Application Estimates (tons/year)	**Updated Permit Application Estimates (tons/year)**
Fugitive Dust	89.5	89.5
Process Plant	60.55	2.0
Drying and Packaging	5.8	1.3
TOTAL	**155.85**	**92.8**

Actual dryer stack emissions testing has shown that the 1.3 tons/year estimate for total particulate is in fact high, with true emissions averaging 0.31 tons/year. This is based on an average emission rate of 0.071 lbs/hr and assuming full time dryer operation (8,760 hours/year). Actual annual hours of dryer operation have been much lower; rarely has the dryer operated full time.

7.2.2 LAND USE DISTURBANCE IMPACTS

At the Irigaray site, the primary impact has been the loss of grazing capacity during the life of the project, which is still a minimal impact. A total of seven animal unit months has been removed from use, a loss of grazing capacity that would support approximately five cows per year. With successful reclamation, this grazing land should be returned to its original capacity.

The primary unavoidable impact caused by operation of the Christensen Ranch project is the removal of up to a total of 1,000 acres of rangeland out of livestock grazing use over a period of 25 to 30 years. Of the total acres of potential disturbance within all mining areas, only approximately 50% may be disturbed at any one time. All of the impacts are considered temporary and reversible by returning the land to its former grazing use through post-mining surface reclamation.

The overall long term effects of the in-situ mining operation at the Irigaray and Christensen Ranch sites are minimal as compared to conventional uranium mining methods because there is no long

term stability of uranium ore tailings and waste required. Potentially, there may be limited conflicts with, or impacts to, coal bed methane (CBM) extraction activities in the area. Generally, CBM impacts in terms of additional land disturbance will be additive to uranium extraction impacts. Cummulative impacts are discussed in Section 2.0.

7.2.3 IMPACTS TO WATER RESOURCES

Potential impacts to water resources from mining and restoration operations include: 1) groundwater consumption; 2) declines in groundwater quality; 3) impacts to surface water from construction or decommissioning activities; and 4) impacts to surface water from accidents. These potential impacts to water resources in the area of the Irigaray/Christensen Ranch area are expected to be minimal, as summarized in the following sections. Impacts to water resources are described in detail in Appendix D6, Hydrology of both the Irigaray WDEQ Application and the Christensen Ranch Amendment Application.

7.2.3.1 Groundwater Consumption

At Christensen Ranch, the maximum total consumptive use of groundwater as a result of mining and restoration of one mine unit is estimated to range from 70 million gallons to 150 million gallons or 215 to 460 acre-feet. In the original Christensen Ranch mine permit amendment application, it was estimated that a total of 8,480 acre-feet to 8,960 acre-feet would be consumptively used for mining and restoration of all mine units. The water withdrawn from the ore zone aquifer consists of bleed water from the mining operation for lixiviant migration control and bleed water from the restoration process. Although the number and size of mine units has been decreased since the original application, the potential consumption has remained essentially the same because the estimate to complete mining in a unit has now increased to up to three years per mine unit.

Impact from the consumptive uses are considered to be temporary and should be mitigated by the withdrawal of the groundwater over the extended period of approximately twenty five years. The primary potential impact will be the temporary lowering of water levels in wells completed in the production zone aquifer in the immediate vicinity of the well fields. Water levels will be monitored during both mining and restoration to assess the amount of drawdown in surrounding wells. Additionally, COGEMA will attempt to minimize the groundwater consumption during restoration, when the majority of the water is withdrawn, by utilizing state of the art technology. Impacts of CBM extraction activity upon groundwater use are addressed in Appendix B of this submittal.

7.2.3.2 Groundwater Quality

Impacts to groundwater are associated with consumptive use and temporary degradation of water quality. Potential groundwater quality impacts from operations at Irigaray and Christensen Ranch are associated with 1) uncontrolled excursions, 2) liner failures in the evaporation ponds, 3) accidental leaks or spills of process solutions, and 4) improper or incomplete groundwater restoration. Additionally, local groundwater quality will be temporarily lowered by the mining process in the vicinity of the well fields. Potential impacts to groundwater quality are discussed:

Excursions

Migrations of lixiviant from the well fields, or excursions, occur during the mining operations due to varying aquifer properties and fluctuations in well field operations. The monitoring systems described in Section 5.0 ensure that any excursion from the well field are detected before lixiviant migrates a significant distance from the production zone. Operations at the Irigaray and Christensen

Ranch sites have demonstrated that this type of monitoring system is effective and that excursions can be controlled. Excursions within the ore zone are typically identified and controlled within a several week (and sometimes days) period.
At Christensen Ranch, several excursions to the ore zone have occurred and have all been controlled.

Waste Disposal Ponds

Liquid and solid wastes are temporarily stored in lined solar evaporation ponds. A leak detection system installed under the ponds ensures that any failure in the lining will be detected before solutions migrate significant distances from the pond area. At both the Irigaray and Christensen Ranch areas, the impact of pond leakage, should it occur, is expected to be small because of the dry strata beneath the ponds and the large vertical distances to groundwater. At Irigaray five ponds were decommissioned prior to the decision to restart production. If any of these ponds are rebuilt, new liners and leak detection systems will be installed.

Since the last license renewal there have been two incidents of pond leakage , both involving brine Pond 4 at Christensen Ranch. On November 15, 2004, a number of holes were found in the pond liner. The holes were repaired. The cause was traced to dragging a discharge line across the liner. The other problem with Pond 4 was discovered on March 16, 2005. There was a separation of a liner seam at a pond corner. That seam separation was repaired. The separation was caused by the weight of accumulated sediments in the pond that placed excessive strain on the liner at the corner..

Accidental Leaks or Spills

Accidental leaks or spills of process chemicals could potentially infiltrate shallow aquifers and locally reduce groundwater quality. Any leaks or spills would probably not be of a sufficient volume to significantly degrade near surface groundwater quality. The potential for these chemicals to migrate into deeper strata is also considered very low due to the large vertical distance between the near surface aquifers and the lower aquifers.

Spills within the well field areas do occur on occasion. The spills are typically a result of an injection line separation inside or adjacent to the mine unit module buildings, as these lines are pressurized and have connections to other piping or valves at the surface. Spills of injection solution are barren of uranium, but do contain radium-226. Spill locations are mapped and soil samples collected when a spill occurs. Soil analyses from past spills indicate that radium-226 does not tend to adsorb in the soil, and the soils have otherwise been unaffected.

Restoration

Should groundwater restoration be incomplete, groundwater quality could be locally degraded. Previous restoration conducted at both Irigaray and Christensen Ranch has shown that the return of groundwater quality to near baseline conditions is feasible. The restoration of the Irigaray wellfields has been approved by both WDEQ and the NRC. The reader is referred to the restoration reports for Irigaray (COGEMA, 2004) and Christensen Ranch (2008) for complete discussions of wellfield restoration success.

7.2.3.3 Construction and Operations Impacts to Surface Water

The activities that could potentially impact surface water in the Irigaray/Christensen Ranch area

include construction and operation of the well fields, pipelines, process plants and access roads. Other operational impacts could include accidental occurrences such as leaks or breaks in pipelines, spills or an evaporation pond overtopping.

Construction Impacts

Normal construction activities within the well fields, process plants and along the pipeline courses and roads may increase the sediment yield of the areas so disturbed. However, the relative sizes of these disturbances are minor compared to the size of the permitted areas and to the size of the watersheds. Most of the disturbed areas are revegetated with an interim seed mixture following the completion of construction. Thus, the effects of increased sediment yield will be short term.

Operational Impacts

The process plants are equipped with a spillage containment system. The curbed plant foundation and pumpable sumps will ensure that leaks or spills within the plants do not leave the plant area. Monitoring of evaporation ponds ensures that the ponds are not overfilled and that leaks, eroded areas, liner damage, or other potential problems, are detected.

Accidental spills of mining solutions, chemicals, fuels or loaded resin are mitigated by immediate remedial action such as containment within earthen berms (where possible) or and/or retrieving the solutions with pumping units. The immediate surface water in the area of both Irigaray and Christensen Ranch, Willow Creek, is an ephemeral stream as are its tributaries. If a spill occurred which reached Willow Creek during a period of flow, the spilled material would be diluted and dispersed. Also, the soils of the licensed area are generally dry and have a high specific retention capacity. Spills to the soil are rapidly absorbed and the dry streambed will not enhance the transport of the solids or liquids. Thus, the impact of any occurrence is likely to remain in close proximity to the site and make remedial action easier and more effective.

Spills that have occurred over the past years have not impacted Willow Creek.

Decommissioning and Reclamation

Sediment yields and total runoff will increase for a very short period of time during and immediately following decommissioning and reclamation activities. The relative area of such disturbances to the area of the watersheds is quite small. In addition, well field decommissioning and reclamation will be on-going throughout the operational life, thus reducing the amount of area to be reclaimed at the end of final operations. Thus, the impacts to surface waters within and adjacent to the licensed area will not be significant because of their short duration and the limited areal extent of the disturbance.

7.2.4 ECOLOGICAL IMPACTS

Principal impacts on terrestrial biota will be caused by the disturbance of soils and vegetation during construction of the facilities. The greatest effect created by this disturbance will be the setting back of plant succession within the area of disturbance. This impact is only temporary and disturbances will be reclaimed using state of the art surface reclamation practices to re-establish the native plant community giving consideration to forage production, ground cover and species diversity.

7.3 RADIOLOGICAL EFFECTS

COGEMA Mining, Inc. (COGEMA) is proposing to operate a uranium in-situ recovery facility with a production and restoration flow of approximately 3000 and 500 gallons per minute (gpm), respectively. An assessment of the radiological effects of the Christensen Ranch-Irigaray facility (the Facility) must consider the types and potential consequences of radiological emissions and potential pathways present.

The Facility will use fixed-bed pressurized down flow ion exchange columns to separate uranium from the pregnant production fluid and treat restoration solutions. The uranium contained in the regenerant from the production ion exchange columns will be precipitated and subsequently vacuum dried.

In addition to ion exchange treatment, the groundwater restoration process will use reverse osmosis to remove the dissolved solids. Liquid and solid waste disposal will occur via direct deep well injection, placement into new or existing surface impoundments, or offsite disposal at an appropriate licensed disposal facility.

The Facility will consist of a main processing plant (Irigaray) and a satellite facility (Christensen Ranch), where an ion exchange system similar to the one described above will operate. The resin from the satellite facility will be transferred to the main processing plant for elution. An average of 1 resin transfer per day from the satellite facility is anticipated. Uranium precipitation, drying, and packaging operations will be conducted at the main processing plant.

The drying and packaging operation at Irigaray will be conducted under vacuum; as such, the only significant routine emission at the Facility will be radon-222 gas. Radon-222, a decay product of radium-226, is dissolved in the lixiviant as it travels through the ore to a production well where it is brought to the surface. The concentration of radon-222 in the production solution and estimated releases were calculated using the methods found in US NRC Regulatory Guide 3.59, "Methods for Estimating Radioactive and Toxic Airborne Source Terms for Uranium Milling Operations" (NRC 1987) and NUREG 1569 "Standard Review Plan for In Situ Leach Uranium Extraction License Applications" (NRC 2003). The details of and assumptions used in these calculations are found in Section 7.3.3

MILDOS-AREA (see Appendix D for the MILDOS printout) was used to model radiological impacts on human and environmental receptors (e.g., air and soil) using site-specific release estimates, meteorological and population data, and other parameters. The estimated radiological impacts resulting from routine site activities are compared to applicable public dose limits as well as naturally occurring background levels.

7.3.1 Exposure Pathways

Figure 7.3-1 presents exposure pathways from all potential sources at the Facility. The predominant pathways for planned and unplanned releases are identified. Atmospheric radon-222 is expected to be the predominant pathway for impacts on human and environmental media. Impacts of Radon-222 releases can be expected in all quadrants surrounding the Facility, the magnitude of which is driven predominantly by wind direction and atmospheric stability. As a noble gas, radon-222 itself has very little radiological impact on human health or the environment. Rather, it is the radon-222 decay products that are of concern. Radon-222 has a relatively short half-life (3.8 days) and its decay products are short-lived, alpha-emitting,

nongaseous radionuclides. Figure 7.3-1 shows that all exposure pathways, with the possible exception of absorption, can be important depending on the environmental media impacted.

7.3.2 Exposures from Water Pathways

The mining solutions in the ore zone will be controlled and adequately monitored to ensure that migration does not occur. The overlying aquifer will also be monitored.

The primary method of waste disposal at the Facility will be by deep well injection or placement in surface impoundments. Two licensed deep injection well exists at the Facility.

The uranium ion exchange, precipitation, drying and packaging facilities will be located on curbed concrete pads to prevent any liquids from entering the environment. Solutions used to wash down equipment will drain to a sump and either be pumped back into the processing circuit or disposal well. The pads will be of sufficient size to contain the contents of the largest tank in the event of a rupture.

No routine liquid environmental discharges, other than waste disposal via deep well injection or lined surface impoundment, are planned and as such, no definable water-related pathways for routine operations exist. There is a surface discharge permit for Christensen Ranch, but any such discharge would be limited in volume and consist of very clean permeate water from reverse osmosis treatment.

Figure 7.3-1
Human Exposure Pathways for Known and Potential Sources at the Christensen Ranch-Irigaray Uranium In-Situ Recovery Project

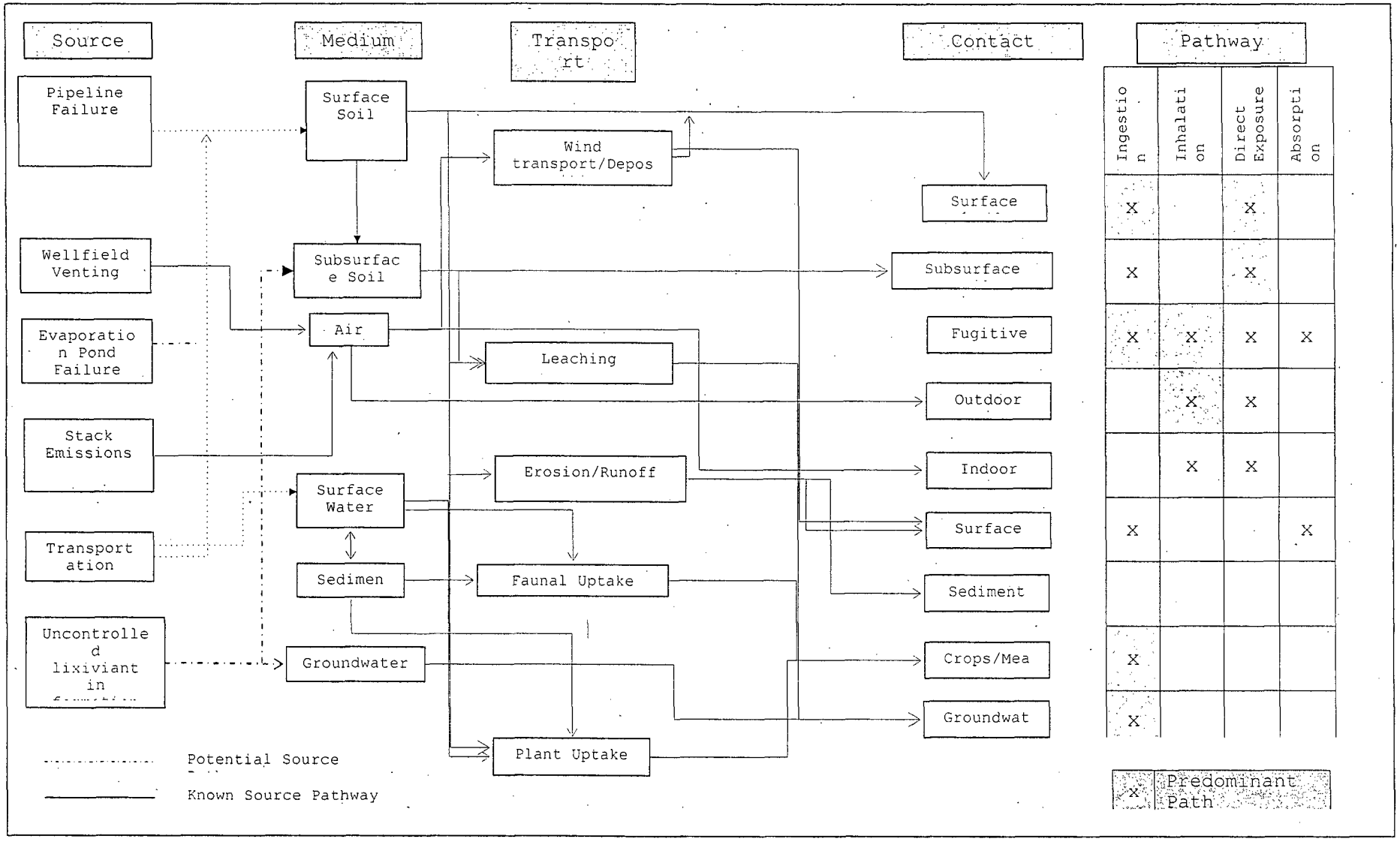

7.3.3 Exposures from Air Pathways

The only significant sources of radionuclide emission are radon-222 released into the atmosphere through a vent system in the satellite plant and from wellfield production and restoration activities. As shown in Figure 7.3-1, atmospheric releases of radon-222 can result in radiation exposure via three pathways: inhalation, ingestion, and external exposure. The Total Effective Dose Equivalent (TEDE) to a hypothetical person living at receptor locations surrounding the facility as well as actual residences was estimated using MILDOS-Area.

7.3.3.1 Source Term Estimates

The source terms used to estimate radon-222 releases from the Facility include two well fields in production, two restoration well fields, one new well field, and the satellite processing facility. The radon-222 releases from these source terms are calculated using methods described in Sections 7.3.3.1.1 through 7.3.3.1.4 below. For the Christensen Ranch area, mine units 10-12 and 7 were chosen based on their proximity to site boundaries and predominant wind directions. The parameters used to characterize and estimate releases are provided in Table 7.3-1.

Table 7.3-1
Parameters used to estimate and characterize source terms at the Christensen Ranch - Irigaray uranium in-situ recovery facility.

Parameter	Value	Unit	Source
Average ore grade	0.094	%	Application
Ore radium-226 concentration	265	$pCi\ g^{-1}$	Reg. Guide 3.59
Mined area	1.6E+05	$m^2\ y^{-1}$	Application
Average lixiviant flow	1.36E+04	$L\ m^{-1}$	Application
Average restoration flow	1.89E+03	$L\ m^{-1}$	Application
Operating days per year	365	days	Full-time operation assumed
Ore formation thickness	3.7	meters	Application
Ore formation porosity	0.28		Application
Ore formation rock density	1.91	$g\ cm^{-3}$	Estimated
Average residence time for lixiviant	8.7	days	Application
Average residence time for restoration solutions	30	days	Application
Average mass of ore material in mud pit	5.2E+05	g	Estimate based on planned activities

Number of mud pits generated per year	300		Estimate based on planned activities
Storage time in mud pits	14	days	Estimate based on planned activities
Radon-222 emanating power	0.2		Reg. Guide 3.59
Radon-222 release rates	0.1	y^{-1}	Estimate based on process
Resin porosity	0.4		NUREG 1569
Ion exchange column volume	1.42E+04	L	Estimate based on planned activities
Number of resin transfers per day (Christensen Ranch only)	1		Estimate based on planned activities
Stack height	16	m	Application
Stack diameter	0.3	m	Application
Stack velocity	11	$m\ s^{-1}$	Application

7.3.3.1.1 Production Releases

Currently, plans are to have up to two wellfield areas that potentially could be mined concurrently. The potential radon-222 releases from the production well fields were estimated using methods described in NRC Regulatory Guide 3.59 as follows:

Radon-222 released (equilibrium condition) to production fluid from leaching is calculated using Equation 1:

$$G = R\rho E \frac{(1-p)}{p} x10^{-6} \qquad \text{(Equation 1)}$$

Where:

G = radon-222 released ($Ci\ m^{-3}$)
R = radium content of ore (pCi/g)
E = emanating power
ρ = rock density ($g\ cm^{-3}$)
p = formation porosity

The yearly radon-222 released to the production fluid is calculated using Equation 2:

$$Y = 1.44GMD(1 - e^{-\lambda t}) \qquad \text{(Equation 2)}$$

Where:

Y	=	yearly radon-222 released to production fluid (Ci yr^{-1})
G	=	radon-222 released at equilibrium (Ci m^{-3})
M	=	lixiviant flow rate (L min^{-1})
D	=	production days per year (d)
λ	=	radon-222 decay constant (d^{-1})
t	=	lixiviant residence time
1.44	=	unit conversion factor

Using Equations 1 and 2 and the parameters in Table 7.3-1, the radon-222 release rate to production fluid is 1480 Ci yr^{-1}. NRC Regulatory Guide 3.59 assumes all radon-222 that is released to the production fluid is ultimately released to the atmosphere, which in the case of ion exchange columns operating at atmospheric pressure in an open system is an appropriate, conservative assumption. In cases where pressurized ion exchange columns are used and wellfields are operated under pressure, the majority of radon released to the production fluid stays in solution and is not released. Fugitive radon-222 is released from occasional well field venting for sampling events, small unavoidable leaks in well field and ion exchange equipment, and maintenance of well field and ion exchange equipment. For this reason, an annual release of 10% of the radon-222 from the production fluid is assumed to occur in the well fields. An additional 10% release in the ion exchange circuit is assumed. This release includes any releases from the worst case bleed stream (125 gallons per minute). Given these assumptions, the annual radon-222 released from production in the wellfields and the satellite facility is 148 and 133 Ci yr^{-1}, respectively. In the MILDOS-AREA model simulations, the wellfield release of 148 Ci yr^{-1} was distributed equally among Mine Areas 7 and 10-12.

7.3.3.1.2 Restoration Releases

Radon-222 releases resulting from wellfield restoration activities were estimated in the same manner as the production activities above (i.e. using Equation 2) but modified for the lower restoration flow rate and longer restoration fluid residence time, both of which are listed in Table 7.3-1. A 10% release in the wellfield, as in the production release, was assumed. A 100% release was assumed at the treatment facility since it is not known whether the restoration water treatment will be under pressure. These assumptions yield a radon-222 release rate of 26 Ci yr^{-1} in the wellfield and 231 Ci yr^{-1} at the satellite facility. In the MILDOS-AREA model simulations, the wellfield release of 26 Ci yr^{-1} was distributed equally among Mine Area 7 and 10-12.

7.3.3.1.3 New Well Field Releases

Radon-222 releases resulting from new wellfield development activities were estimated using methods described in NUREG-1569 as follows:

$$Rn_{nw} = E\lambda[Ra]TmNx10^{-12} \qquad \text{(Equation 3)}$$

Where:

Rn_{nw}	=	Radon-222 release rate from new well field (Ci yr^{-1})
E	=	emanating power
[Ra]	=	concentration of radium-226 in ore (pCi g^{-1})
λ	=	decay constant of radon-222
T	=	storage time in mud pit (d)

m	=	average mass of ore material in the pit (g)
N	=	number of mud pits generated per year
10^{-12}	=	unit conversion factor (Ci pCi^{-1})

Using Equation 3 and the parameters in Table 7.3-1, the yearly radon released from new well field development is 0.02 Ci yr^{-1}. In the MILDOS-AREA model simulations, the new wellfield release was assumed to occur at Mine Areas 7 and 10-12.

7.3.3.1.4 Resin Transfer Releases

The radon-222 release resulting from resin transfers from the Christensen Ranch satellite facility was estimated using methods described in NUREG-1569 as follows:

$$Rn_x = 3.65x10^{-10} F_i C_{Rn} \qquad \text{(Equation 4)}$$

Where:

Rn_x	=	Radon-222 release rate from resin transfers (Ci yr^{-1})
F_i	=	water discharge rate from resin unloading (L d^{-1})
C_{Rn}	=	Steady state radon-222 concentration in process water (pCi L^{-1})
$3.65x10^{-10}$	=	unit conversion factor (Ci pCi^{-1})(d yr^{-1})

The steady state radon-222 concentration in process water (C_{Rn}) was estimated from the following expression:

$$C_{Rn} = \frac{Y * 1.9x10^6}{M} \qquad \text{(Equation 5)}$$

Where:

C_{Rn}	=	Steady state radon-222 concentration in process water (pCi L^{-1})
Y	=	yearly radon-222 released to production fluid (Ci yr-^{1})
M	=	lixiviant flow rate (L min^{-1})
$1.9x10^6$	=	unit conversion factor (pCi Ci^{-1})(yr min^{1})

The water discharge rate from resin unloading (Fi) was estimated from the following expression:

$$F_i = N_i * V_i * P_i \qquad \text{(Equation 6)}$$

Where:

F_i	=	water discharge rate from resin unloading (L d^{-1})
N_i	=	Number of resin transfers per day
V_i	=	volume of resin in transfer (L)
P_i	=	porosity of resin

Using Equations 4 through 6 and the parameters in Table 7.3-1, the radon-222 released from resin transfers from the Christensen Ranch satellite facility is 0.42 Ci yr^{-1}. In the MILDOS-AREA model simulations, the resin transfer release was assumed to occur only at the Christensen Ranch satellite

plant site.

7.3.3.1.5 Radon-222 Release Summary

A summary of estimated radon-222 releases from the Facility is presented in Table 7.3-2. The source coordinates in Table 7.3-2 and 7.3-3 are relative to the Christensen Ranch satellite facility.

Table 7.3-2
Estimated Radon-222 releases (Ci yr^{-1}) from Christensen Ranch-Irigaray Facility.

			Radon-222 Releases (Ci yr^{-1})				
Location	**X (km)**	**Y (km)**	**Production**	**Restoration**	**Drilling**	**Resin Transfer**	**Total**
CR Mine Area 7	4.1	0.4	74	13	0.02	0	87.02
CR Mine Area 10-12	-3.1	1.7	74	13	0.02	0	87.02
CR Satellite Plant	0	0	133	231	0	0.42	364.42
Irigaray Thermal Dryer	-7.09	9.22	0	0	0	0	0
Total			281	257	0.04	0.42	538.46

Notes:
CR = Christensen Ranch

7.3.3.1.6 Other Airborne Radionuclide Releases

The yellow cake dryer stack at the Irigaray location will have minimal releases of long lived radionuclides including natural uranium, radium-226, thorium-230, and lead-210. The yellow cake dryer is a vacuum rotary type; resulting in minimal particulate emissions. The emission quantities of these radionuclides were taken from monthly release rates reported in "*Cogema Resources Company Yellow Cake Dryer Stack Test Report*" (WEST 2005) and scaled to reflect annual emission quantities. These quantities are summarized in Table 7.3-3.

Table 7.3-3
Estimated long-lived radionuclide releases (Ci yr^{-1}) from Irigaray Facility.

			Long-Lived Radionuclide Releases (Ci yr^{-1})			
Location	**X (km)**	**Y (km)**	**Natural Uranium**	**Radium-226**	**Thorium-230**	**Lead-210**
Irigaray Thermal Dryer	-7.09	9.22	0.009	2.6E-06	4.4E-06	1.1E-04

7.3.3.2 Receptors

The receptors used in the MILDOS-AREA simulations are presented in Table 7.3-4 and represent directional and residential receptors.

Table 7.3-4
Christensen Ranch-Irigaray receptor names and locations

Receptor	X (km)	Y (km)	Distance (km)
1. AS-1	-3.66	-0.46	3.69
2. AS-5A	0.01	-0.05	0.05
3. AS-5B	-0.01	0.01	0.02
4. AS-6	3.51	-3.73	5.12
5. 100 M North	0.00	0.10	0.10
6. 100 M East	0.10	0.00	0.10
7. 100 M South	0.00	-0.10	0.10
8. 100 M West	-0.10	0.00	0.10
9. 100 M Upwind	0.07	-0.07	0.10
10. 100 M Downwind	-0.07	0.07	0.10
11. 200 M North	0.00	0.20	0.20
12. 200 M East	0.20	0.00	0.20
13. 200 M South	0.00	-0.20	0.20
14. 200 M West	-0.20	0.00	0.20
15. 200 M Upwind	0.14	-0.14	0.20
16. 200 M Downwind	-0.14	0.14	0.20
17. 240 Deg @ 725 M	-0.72	-0.38	0.81
18. 270 Deg @ 5500 M	-5.49	0.00	5.49
19. 330 Deg @ 5100 M	-4.00	3.05	5.03
20. 345 Deg @ 2050 M	-0.84	1.83	2.01
21. 45Deg @ 3350 M	2.36	2.29	3.29
22. 80 Deg @ 4725 M	4.57	1.22	4.73
23. IR-1	-7.18	9.28	11.73
24. IR-3	-7.05	9.22	11.61
25. IR-4	-7.09	10.06	12.31
26. IR-5	-9.22	15.09	17.68
27 IR-6	-6.02	8.50	11.24
28. 50 M North of TD	-7.09	9.27	11.67
29. 50 M East of TD	-7.04	9.22	11.60
30. 50 M South of TD	-7.09	9.17	11.59
31. 50 M West of TD	-7.14	9.22	11.66
32. 50 M Upwind of TD	-7.05	9.19	11.58
33. 50 M Downwind of TD	-7.13	9.26	11.69
34. 100 M North of TD	-7.09	9.32	11.71
35. 100 M East of TD	-6.99	9.22	11.57
36. 100 M South of TD	-7.09	9.12	11.55
37. 100 M West of TD	-7.19	9.22	11.69
38. 100 M Upwind of TD	-7.02	9.15	11.53
39. 100 M Downwind of TD	-7.16	9.29	11.73
40. 200 M North of TD	-7.09	9.42	11.79
41. 200 M East of TD	-6.89	9.22	11.51
42. 200 M South of TD	-7.09	9.02	11.47
43. 200 M West of TD	-7.29	9.22	11.75
44. 200 M Upwind of TD	-6.95	9.08	11.43
45. 200 M Downwind of TD	-7.23	9.36	11.83
46. 500 M North of TD	-7.09	9.72	12.03
47. 500 M East of TD.	-6.59	9.22	11.33
48. 50 M South of TD	-7.09	8.72	11.24

Notes:
AS = Air monitoring station Deg = degrees
TD = Thermal dryer IR = Irigaray
M = meter

7.3.3.3 Miscellaneous Parameters

The meteorological data used in the MILDOS-AREA model is from the Joint Frequency Distribution data presented in Appendix D4 of the Mine Permit No. 478 Christensen Ranch amendment application (1988).

The population distribution used in the MILDOS-AREA model to estimate population doses is from the demographic information presented in Section 2.0 of this amendment application.

7.3.3.4 Total Effective Dose Equivalent (TEDE) to Individual Receptors

In order to show compliance with the annual dose limit found in 10 CFR 20.1301, COGEMA has demonstrated by calculation that the TEDE to the individual most likely to receive the highest dose from the Facility operation is less than 100 mrem per year. The results of the MILDOS-AREA simulation for each potential receptor location in Table 7.3-5 are presented in Table 7.3-6.

An evaluation of the TEDE follows:

1) The maximum TEDE of 5.8 mrem/yr, located 200 meters south of the Christensen Ranch satellite facility, is 5.8 percent of the public dose limit of 100 mrem/yr. However, no receptors are anticipated at this location since it is within the permit boundary. Occupationally exposed workers would be expected to be at this location for a fraction of their work time.

2) The TEDE to the site's nearest residents ranged from 0.2 to 1.1 mrem/yr.

3) The maximum percentage of the Effluent Concentration for radon-222 with daughters present (Effluent Concentration is 1×10^{-10} μCi ml^{-1}) is 78. This is projected to occur at 200 meters south of the Christensen Ranch satellite facility, which is well within the site boundary.

4) The effect of the Facility operation at any potential resident is less than or equal to 1.1 mrem/yr TEDE.

5) The contributions from long-lived radionuclide emissions from the thermal dryer stack at Irigaray were not significant and ranged from 0.003 to 1.3 mrem/yr to an adult. The highest dose estimate was 200 meters south of the Irigaray thermal dryer, which is within the permit boundary. This is well below public dose requirements in 40 CFR Part 190 and the 10 mrem/yr constraint rule in 10 CFR 20.1101, both of which exclude doses from radon-222.

6) Even if 100% of the radon-222 contained in production fluids were released to the atmosphere (i.e. 100% released instead of 10%), the TEDE at receptor locations surrounding the Facility would be less than the 100 mrem/yr public dose limit and the radon-222 air concentrations would be less than the radon-222 Effluent Concentration at boundary locations.

7) The air concentrations for long-lived radionuclides (uranium-228, thorium-230, radium-226, and lead-210) are well below their respective Effluent Concentrations at all receptor locations.

Table 7.3-5
MILDOS-Area predicted radon-222 concentrations and estimated TEDE at directional receptors surrounding the Christensen Ranch-Irigaray uranium processing facility.

Receptor	Distance (km)	Rn-222 Conc. ($\mu Ci\ ml^{-1}$)	% Effluent Conc.	TEDE ($mrem\ yr^{-1}$)
1. AS-1	3.69	3.4E-12	3.4	0.3
2. AS-5A	0.05	2.5E-11	25.0	1.9
3. AS-5B	0.02	1.4E-12	1.4	0.1
4. AS-6	5.12	2.6E-12	2.6	0.2
5. 100 M North	0.10	4.6E-11	46.0	3.5
6. 100 M East	0.10	2.1E-11	21.0	1.6
7. 100 M South	0.10	7.3E-11	73.0	5.5
8. 100 M West	0.10	7.4E-11	74.0	0.6
9. 100 M Upwind	0.10	2.8E-11	28.0	2.1
10. 100 M Downwind	0.10	3.1E-11	31.0	2.3
11. 200 M North	0.20	7.0E-11	70.0	5.2
12. 200 M East	0.20	2.8E-11	28.0	2.1
13. 200 M South	0.20	7.8E-11	78.0	5.8
14. 200 M West	0.20	1.5E-11	15.0	1.2
15. 200 M Upwind	0.20	3.7E-11	37.0	2.8
16. 200 M Downwind	0.20	6.5E-11	65.0	4.9
17. 240 Deg @ 725 M	0.81	5.6E-12	5.6	0.4
18. 270 Deg @ 5500 M	5.49	2.2E-12	2.2	0.2
19. 330 Deg @ 5100 M	5.03	1.3E-11	13.0	1.1
20. 345 Deg @ 2050 M	2.01	8.7E-12	8.7	0.7
21. 45Deg @ 3350 M	3.29	8.0E-12	8.0	0.6
22. 80 Deg @ 4725 M	4.73	8.7E-12	8.7	0.7
23. IR-1	11.73	2.9E-12	2.9	0.6
24. IR-3	11.61	2.9E-12	2.9	0.3
25. IR-4	12.31	6.7E-13	0.7	0.1
26. IR-5	17.68	1.5E-12	1.5	0.2
27. IR-6	11.24	3.2E-12	3.2	0.8
28. 50 M North of TD	10.42	2.9E-12	2.8	0.4
29. 50 M East of TD	12.03	2.9E-12	2.9	0.4
30. 50 M South of TD	11.60	2.9E-12	2.9	0.8
31. 50 M West of TD	11.59	2.9E-12	2.9	0.3
32. 50 M Upwind of TD	11.66	2.9E-12	2.9	0.4
33. 50 M Downwind of TD	11.58	2.9E-12	2.9	0.4
34. 100 M North of TD	11.69	2.9E-12	2.9	1.0
35. 100 M East of TD	11.71	2.9E-12	2.9	0.6
36. 100 M South of TD	11.57	3.0E-12	2.9	1.5
37. 100 M West of TD	11.55	2.9E-12	3.0	0.4
38. 100 M Upwind of TD	11.69	2.9E-12	2.9	0.7
39. 100 M Downwind of TD	11.53	2.9E-12	2.9	0.8
40. 200 M North of TD	11.73	2.8E-12	2.9	1.4
41. 200 M East of TD	11.79	2.9E-12	2.8	0.7
42. 200 M South of TD	11.51	3.0E-12	2.9	1.6
43. 200 M West of TD	11.47	2.9E-12	3.0	0.5
44. 200 M Upwind of TD	11.75	3.0E-12	2.9	0.9
45. 200 M Downwind of TD	11.43	2.9E-12	3.0	1.3
46. 500 M North of TD	11.83	2.7E-12	2.9	0.7
47. 500 M East of TD.	12.03	2.8E-12	2.8	0.5
48. 50 M South of TD	11.33	3.2E-12	2.8	0.8

7.3.3.5 Population Dose

The annual population dose commitment to the population in the region within 80 km of the Facility is also predicted by the MILDOS-AREA code. The results are listed in Table 7.3-6, where TEDE is expressed in units of person-rem/yr. For comparison, the dose to the population within 80 km of the Facility due to background radiation is included in the table. Background radiation doses are based on a North American population of 346 million and an average annual TEDE of 360 mrem (NCRP 1987).

The atmospheric release of radon also results in a dose to the population on the North American continent. This continental dose is calculated by comparison with a previous calculation based on a 1 kilocurie release near Casper, Wyoming. The results of these calculations are included in Table 7.3-6 and combined with dose to the region beyond 80 km of the Facility to arrive at the total radiological effects of one year of operation at the Facility.

The maximum radiological effect of the Facility operation would be to increase the TEDE of the continental population by 0.0000036 percent.

Table 7.3-6
Total Effective Dose Equivalent to the population from one year's operation at the Christensen Ranch-Irigaray Facility

Criteria	TEDE (person-rem/yr)
Dose received by population within 80 km of the Facility	0.08
Dose received by population beyond 80 km of the Facility	4.7
Total Continental Dose	4.8
Background North American Dose	1.2E+08
Fractional increase to background dose	1.4E-08

7.3.3.6 Exposure to Flora and Fauna

To estimate potential radiological impacts to flora and fauna, the most important pathway for exposure should be identified. The most significant planned atmospheric emissions from the Facility include natural uranium and radon-222; therefore the most important pathway for exposure to flora and fauna is deposition of natural uranium and radon-222 decay products on surface water, surface soils, and vegetation. MILDOS-AREA estimates radionuclide surface deposition rates as a function of distance from the source and at receptor locations and calculates ground surface concentrations. Table 7.3-7 presents the highest surface radionuclide concentrations predicted by MILDOS-AREA over a 5-year period. Soil concentrations were calculated based on a conservative assumption of 1.5 g cm^{-3} bulk soil density and a soil mixing zone of 15 cm.

Table 7.3-7
Highest surface radionuclide concentrations resulting from Christensen Ranch-Irigaray uranium ISR operations.

Radionuclide	Receptor Location	Surface Concentration (pCi/m^2)	Soil Concentration in upper 15 cm (pCi/g)
Uranium-238	No. 42. 200 M South of TD	1276	6E-03
Thorium-230	No. 42. 200 M South of TD	1.40	6E-06
Radium-226	No. 42. 200 M South of TD	0.83	4E-06
Polonium-218	No. 13. 200 M South	13.7	6E-05
Lead-214	No. 13. 200 M South	13.7	6E-05
Bismuth-214	No. 13. 200 M South	13.7	6E-05
Lead-210	25 Meters East of CR Satellite Facility	24	1E-04

Uranium-228 represents the radionuclide with the highest concentration (6E-03 pCi/g) which is at least an order of magnitude below most analytical laboratory detection limits. Site-specific surface soil (0-15 cm) data show that natural uranium ranges from 1.2 to 7.7 with a mean of 2.6 ± 1.5 pCi/g (COGEMA 2001). The increase in soil radioactivity is insignificant compared to site-specific background concentrations.

From this evaluation, the impact of operations at the Facility would be minimal and indistinguishable from current conditions.

REFERENCES

COGEMA 2001. COGEMA Mining Company, *Decommissioning Plan for Irigaray and Christensen Ranch Projects.*

Malapai Resources 1988. Application for In Situ Permit to Mine for Christensen Ranch, Wyoming Department of Environmental Quality, Approved Permit to Mine No. 478, 1977 (Amendment No. 2, 1988), Section D4, Meteorology.

NRC, 1987. U.S. Nuclear Regulatory Commission (NRC) Regulatory Guide 3.59, *Methods for Estimating Radioactive and Toxic Airborne Source Terms for Uranium Milling Operations.*

NRC, 2003. U.S. Nuclear Regulatory Commission (NRC) NUREG-1569, *Standard Review Plan for In-Situ Leach Uranium Extraction License Applications-Final Report, Appendix D, MILDOS-AREA: An Update with Incorporation of In-Situ Leach Uranium Recovery Technologies*

NCRP, 1987. National Council on Radiation Protection and Measurements (NCRP) Report No. 93, *Ionizing Radiation Exposure of the Population of the United States.*

WEST, 2005. Western Environmental Services Testing, Inc (WEST), *Cogema Resources Company, Yellow Cake Dryer Stack Test Report.*

7.4 NON-RADIOLOGICAL EFFECTS

The in-situ solution mine is by design a self-contained mining circuit. Wastes generated by the facility are contained and eventually removed to disposal elsewhere. The potential non-radiological effects of the operation include the possibility of lixiviant excursion, evaporation pond leakage and temporary disturbance of the land during site preparation, construction and operations. The effects of these possible occurrences are considered small as discussed in Section 7.2 above. The environmental monitoring programs given in Section 5.8 are designed to quickly identify any adverse conditions that may result during operations. No long term irreversible effects are anticipated.

7.5 EFFECTS OF ACCIDENTS

Accidents involving human safety associated with the in-situ uranium mining technology typically have far less severe consequences than accidents associated with underground and open pit mining methods. In-situ mining provides a higher level of safety for personnel and neighboring communities when compared to conventional mining methods or other energy related industries. Accidents that may occur are minor and are not catastrophic as would be the case for explosions at oil refineries or in equipment malfunctions or human error in the public transportation industries. Radiological accidents at the Irigaray/Christensen Ranch site, if they occur, would typically manifest themselves slowly and are, therefore, detectable in sufficient time to be safely and methodically corrected. The remote location of the site and the low level of radioactivity associated with the process both decrease the potential hazard of an accident to the general public.

7.5.1 ACCIDENTS INVOLVING RADIOACTIVITY

7.5.1.1 Tank Failure

Process fluids are contained in vessels and piping circuits within the process plant or in bermed outside storage tanks. The process plants have been designed to control and confine liquid spills should they occur. The plant building structure and concrete curb will contain liquid spills from the leakage or rupture of a process vessel and will direct any spilled solution to a floor sump. The floor sumps are equipped with a pump to transfer any spilled solutions back into the plant process or to the lined evaporation pond system. Consequently, the accident would be of short duration and the remedial procedure is incorporated into the process plant design.

All tanks in the process plant(s) are made of fiberglass or steel. Instantaneous failure is highly unlikely. Tank failure would more likely occur as a small leak in the tank. In this case, the tank would be emptied to below the leakage level and repaired. Procedures to be followed in the event of an uncontrolled liquid release in the plant area are described in Standard Operating Procedure E-1, Plant Solution Spills.

7.5.1.2 Pipe Failure

The rupture of a pipeline within the process plant is easily visible and can be repaired quickly. The

maintenance equipment within the satellite process plant will be adequate to handle this type of problem.

The rupture of an injection or recovery line between the plant and well field will result in either barren or pregnant leach solution contaminating the ground near the break. A large and sudden rupture will be detected by a drop in pressure in the system and interruptions in the flow of liquids. A small break will be detected visually during routine inspection of the lines. Any ground contamination will be removed to disposal. Procedures to be followed in the event of an uncontrolled liquid release in a well field are described in Standard Operating Procedure E-2, Well Field Solution Spills.

7.5.1.3 Lined Evaporation Ponds

An accident involving a leak in a solar evaporation pond is detectable via the leak detection system placed beneath the pond liner. If a pond leak does occur, the effects of the seepage will be mitigated by the natural clay content of the soils underlying the liner. The clays will absorb radium and other constituents contained in the seepage. Seepage from a pond leak should not affect the local groundwater system due to the large distance from ground surface to the water table. A breach in a pond berm is unlikely because of the design requirements which are incorporated to avoid such an occurrence. Leaks detected in site evaporation ponds have been discussed earlier in this section.

7.5.1.4 Lixiviant Excursion

Pre-mining hydraulic testing has defined the aquifer characteristics for the receiving strata or production zone at the site. The ore-bearing strata is physically and hydraulically separate from overlying and underlying aquifers. The well completion procedures used and the mechanical integrity testing for each injection well performed prior to leach solution injection ensure that injected solutions are contained within the well and are transmitted to the target production zone. The monitoring program for overlying and underlying aquifers is a backup check to ensure that the injection is controlled in this manner. Should an excursion occur, the excursion correction procedures outlined in Section 3.0 of this document will be instituted immediately.

Excursion parameter upper control limits for all aquifers are extremely close to baseline concentrations so that the slightest perturbation in water quality is detected and precautionary measures are taken. Because of the chemically conservative nature of the excursion parameters used, it would be extremely unlikely that at the time excursion correction procedures are instituted that any chemical parameter other than the excursion indicators will be different from baseline values. As such, no radiologic groundwater degradation should result when a well is in excursion status.

In the event that an excursion does occur and is accidentally undetected, concentrations of metals such as uranium, arsenic, selenium and radium-226 are likely to be low due to natural precipitation and adsorption onto clays. This phenomenon occurs because the metals, which are mobilized in the oxidized environment of the production zone, are selectively removed from solution via precipitation or adsorption as they move into the reduced environment outside of the production zone.

7.5.2 TRANSPORTATION ACCIDENTS

Transportation of materials to and from the Irigaray/Christensen Ranch site can be categorized as

follows: 1) shipments of yellowcake, 2) shipments of uranium-laden resin to the Irigaray recovery facility from Christensen Ranch; 3) shipments of barren, eluted resin from the Irigaray facility; 4) shipments of process chemicals or fuel from suppliers to the sites; and 5) shipments of radioactive waste from the sites to a licensed disposal facility. Accidents involving these transportation occurrences are discussed below.

7.5.2.1 Accidents Involving Yellowcake Shipments

Accidents involving yellowcake shipments can take two forms. The first would involve a shipment of dried yellowcake product being shipped from the Irigaray facility after processing. The second would involve the potential shipment of uranium oxide or yellowcake slurry, which could be product that is being shipped from another licensee to Irigaray for processing, or slurry being shipped from Irigaray to another processing location in the event that the dryer at Irigaray is not operational.

The dried yellowcake that is produced at the Irigaray Recovery facility will be shipped to a uranium hexafluoride conversion plant. The dried yellowcake product is generally packaged in 0.208 m^3 (55-gal), 18 gauge drums holding an average of 364 kg (800 lb) and classified by the Department of Transportation as Type A packaging (49 CFR Parts 171-189 and 10 CFR Part 71). It is shipped by truck to a conversion plant, which will transform the yellowcake to uranium hexafluoride for the enrichment step of the light water-cooled reactor fuel cycle. An average truck shipment contains approximately 45 drums, or 16 metric tons (17.5 tons) of dried yellowcake.

In the case of the slurry shipments, each shipment will contain approximately 14,000 pounds of U_3O_8. Shipments are made in COGEMA owned, exclusive use slurry transport trailers.

From published statistics, the probability of a truck accident is in the range of 1.0×10^{-6} to 1.6×10^{-6} per kilometer (1.6×10^{-6} to 2.6×10^{-6} per mile). Truck accident statistics include three categories of traffic accidents: collisions, noncollisions, and other events. Collisions involve interactions of the transport vehicle with other objects, whether moving vehicles or fixed objects. Noncollisions are accidents in which the transport vehicle leaves the transport path or deviates from normal operation in some way, such as by rolling over on its top and side. Accidents classified as other events include personal injuries suffered on the vehicle, records of persons falling from or being thrown against a standing vehicle, cases of stolen vehicles, and fires occurring in a standing vehicle.

The ability of materials and structures in the shipping package to resist the combined physical forces arising from impact, puncture, crush, vibration, and fire depends on the magnitude of the forces. These magnitudes vary with the severity of the accident, as does the frequency with which they occur. A generalized evaluation of accident risks by the USNRC classifies accidents into eight categories, depending upon the combined stresses of impact, puncture, crush, and fire. On the basis of this classification scheme, conditional probabilities (i.e., given an accident, the probabilities that the accident is of a certain magnitude) of the occurrence of the eight accident severities were developed. In order to assess the risk of a transportation accident, it is necessary to know the fraction of radioactive material that is released when involved in an accident of a given severity. Two models have been developed for this analysis. Model I assumes complete loss of the drum contents. Model II, based upon actual tests, assumes partial loss of the drum contents. The packaging is assumed to be Type A drums containing low specific activity (LSA) radioactive materials.

For Model I and Model II, the quantity of yellowcake in its dried form released to the atmosphere in

the event of a truck accident is estimated to be approximately 7,400 kg (16,200 lb) and 500 kg (1,100 lb) respectively. Most of the yellowcake released from the container would be deposited directly on the ground in the immediate vicinity of the accident. Some fraction of the released material, however, would be dispersed into the atmosphere. Additional details on this modeling can be found in the Irigaray Environmental Impact Statement, NUREG-0481. Slurry shipments, there would be no dust dispersion considerations as the uranium is contained on the slurry, thus the wet mixture creates no dust.

Standard Operating Procedure E-11, Transportation Accidents Involving Radioactive LSA Material, details procedures to be followed in the event of an emergency.

7.5.2.2 Accidents Involving Resin Transfers

COGEMA anticipates that two tanker truckloads of uranium-laden resin and two tanker truckloads of barren, eluted resin could be transported on a daily basis to Irigaray from the Christensen Ranch satellite plant. The resin is transported in a specially designed, low profile, 2,500 gallon capacity tanker trailers.

The worst case accident involving the resin transfer would involve the total wreckage of the transport truck and tanker trailer when carrying uranium laden resin and where all of the tank contents were spilled. Because the uranium adheres to the resin and the resin is in a wet condition during shipment, the radiological and environmental impacts of such a spill should be relatively minimal. The radiological or environmental impact of a similar accident with barren, eluted resin would be very minor. The primary environmental impact associated with either accident would be the salvage of soils impacted by the spill area and the subsequent damage to the topsoil and vegetation structure. Areas impacted by the removal of soil would be revegetated.

In the event of a transportation accident involving the resin transfer operation from Christensen Ranch to Irigaray, COGEMA will institute its emergency response plan for transportation accidents. To minimize the impacts from such an accident, the following procedures will be followed:

1. Each resin hauling truck will be equipped with a radio which can communicate with either the Irigaray recovery facility or the Christensen Ranch satellite plant. In the event of an accident and spill, the driver can radio to both sites to obtain help.

2. A check-in and check-out procedure will be instituted where the driver will call the receiving facility prior to departure from his location. If the resin shipment fails to appear within a set time, a crew would respond and search for the vehicle. This system will assure reasonably quick response time in the case that the driver is incapacitated in the accident.

3. Each resin transport vehicle will be equipped with an emergency contingency package whereby the driver could use the contained equipment to begin containment of any spilled material.

4. Both the Irigaray and Christensen facilities will be equipped with emergency response packages to quickly respond to a transportation accident.

5. Personnel at both the Irigaray and Christensen facilities, as well as the designated

truck drivers, will have specialized training to handle an emergency response to a transportation accident.

7.5.2.3 Accidents Involving Shipments of Process Chemicals

The probability of an accident involving the transfer of resin or any shipment of process chemicals is very low. Chemicals which will be shipped to the Irigaray/Christensen Ranch site may include soda ash, hydrochloric acid, sulfuric acid, sodium bicarbonate, carbon dioxide gas, gaseous oxygen, propane, diesel fuel and gasoline. An accident involving a supplier of any of the above chemicals would be handled according to the same emergency response plan as yellowcake or resin transfer accidents. Specialized training will be provided to employees as to the various precautions regarding the different chemicals which could be spilled. The impacts of such accidents should be relatively minor due to the mitigation provided by the emergency response plan.

7.5.2.4 Accidents Involving Radioactive Wastes

Radioactive solid byproduct material or unusable contaminated equipment generated during the operations will be transported to a licensed disposal site as needed and at the time of decommissioning. Because of the low radioactive concentrations involved, these shipments are considered to have minimum potential for significant impacts as a result of transportation accidents. The effects of an accident during the transportation of such waste will be mitigated by the emergency response plan for transportation accidents.

7.5.3 OTHER ACCIDENTS

Other potential accidents involving non-radiological materials are associated with the various chemical and fuel storage tanks maintained outside the process facilities. Each of the liquid chemical storage tanks will be surrounded by earthen berms. Each tank will be labeled to identify the solution within the tanks. In the event that a tank should instantaneously rupture, the solutions will be retained by the surrounding earthen berm placed around the tank for that purpose.

Fuel storage tanks are placed in an area remote from the building to avoid fire damage to the building or injury to workers in the unlikely event of combustion of the fuel.

A spill prevention, control and countermeasure (SPCC) plan is in place for the Irigaray and Christensen Ranch sites. Although EPA only requires this plan for oil or raw petroleum fuel products, COGEMA has expanded our plan to include all stored chemicals. The plan is addressed in Standard Operating Procedures SPCC-1, Inspection of Facilities, and SPCC-2, Spill Response.

8.0 ALTERNATIVES TO PROPOSED ACTION

The alternatives applicable to the Irigaray/Christensen Ranch site are: to mine by in situ methods using an alternative lixiviant chemistry; to dispose of liquid wastes by methods other than those currently available on site; to add the uranium elution and precipitation processes to the satellite facilities, thereby eliminating the resin haul to the Irigaray Recovery facility; to mine the ore body by conventional methods; or to not mine the property at all.

8.1 ALTERNATIVE LIXIVIANT CHEMISTRY

The Irigaray and Christensen Ranch ore bodies in earlier mine units were mined with sodium bicarbonate as the lixiviant. Both historical uranium recovery success and subsequent mine units restoration support the conclusion that sodium bicarbonate is an acceptable lixiviant for this site. There is no compelling reason to consider an alternate lixiviant.

8.2 WASTE MANAGEMENT ALTERNATIVES

Lined solar evaporation ponds, unlined clean water storage ponds, surface discharge (under a discharge permit) and deep well injection are used for the storage and disposal of waste water solutions from the mining and restoration operations at the collective Irigaray and Christensen Ranch sites. In light of the range of approaches already approved and utilized at the sites, additional alternatives to waste water disposal would not seem worth pursuing. COGEMA's operational experience with the two deep disposal wells at Christensen Ranch support the attractiveness of the development of additional deep disposal wells. An application has been submitted for two additional deep disposal wells for the Irigaray site that would be completed in the Lance formation. That application is currently under review, and its eventual fate is uncertain at this time.

COGEMA intends to transport all solid radioactive wastes off-site to a USNRC licensed disposal facility when final decommissioning occurs. Currently a contract is in place with Pathfinder Mines Corporation, Shirley Basin Tailings Facility for byproduct waste disposal. Should this USNRC licensed disposal facility not be available to COGEMA at the time of decommissioning, an alternative off-site disposal facility would have to be found.

8.3 URANIUM RECOVERY PROCESS ALTERNATIVES

At present, there is no uranium elution or precipitation capability proposed (or even contemplated) for the Christensen Ranch satellite facility. This capability may become desirable in the future when mining activities expand or a plant expansion becomes necessary at the Irigaray Recovery facility. The economics of placing the elution and

precipitation circuits at Christensen Ranch may be more favorable than those associated with an expansion of the Irigaray facility combined with the increase in the number of resin hauls and associated expense. It is also conceivable that the drying unit at Irigaray could be moved to Christensen Ranch as well. However, at this time the economics of future mining at Christensen Ranch favor the current configuration with a loaded resin haul to Irigaray for elution, precipitation, and drying of the final product.

8.4 MINING ALTERNATIVES

Because the Irigaray/Christensen Ranch property is now an established commercial solution mining site, there are no viable alternatives to the mining methods at this time. The current low price of uranium makes an established solution mining process very attractive and perhaps the only economical method of mining uranium at this time. The use of conventional mining methods (open pit or underground) for the Irigaray/Christensen Ranch site is presently considered not economically feasible. Generally, open pit mining is used for relatively moderate grade ore deposits close to the ground surface. The overburden to ore ratio under present economic conditions precludes the mining of the Christensen Ranch site using open pit methods. Underground mining is generally used for deeper, higher grade deposits. Due to the large capital investments and higher operating costs required for underground mining and open pit mining, as well as environmental disadvantages, neither method is considered to be economically feasible.

Environmental and socioeconomic advantages of the in situ leaching recovery method as compared with underground or open pit methods are:

1. minimal surface disturbance
2. less solid waste production (no mill tailings)
3. less air pollution
4. smaller radiological releases to the environment (short and long term)
5. ability to economically mine a lower grade of ore
6. a smaller capital investment
7. less risk to personnel
8. lower manpower requirements
9. ability to return groundwater to near pre-mining conditions.

8.5 ALTERNATIVE TO NO LICENSING ACTION

If the NRC chooses to deny the renewal of License SUA-1341 for production on a commercial scale, COGEMA would be forced to resume the decommissioning and reclamation of the site, leaving a valuable mineral unmined. This denial would also result in the loss of large investments incurred to date by COGEMA for the rights to and development of the Irigaray/Christensen Ranch site. COGEMA currently has contracts for

the sale of uranium to be used as fuel in nuclear reactors; the denial of the application will impair COGEMA's ability to deliver on their contracts.