AP1000 DOCUMENT COVER SHEET

TDC: _____ Permanent File: _____

AP1000 DOCUMENT NO.	REVISION	PAGE	ASSIGNED TO	OPEN ITEMS (Y/N)
APP-GW-GLR-134	5	1 of 804	W-Sisk	

ALTERNATE DOCUMENT NUMBER: TR-134 WORK BREAKDOWN #:

ORIGINATING ORGANIZATION: Westinghouse Electric Company

TITLE: **AP1000 DCD Impacts to Support COLA Standardization**

ATTACHMENTS:	DCP #/REV. INCORPORATED IN THIS DOCUMENT REVISION:
Attachment A and B, Integral to Documentt	None
CALCULATION/ANALYSIS REFERENCE: N/A	

ELECTRONIC FILENAME	ELECTRONIC FILE FORMAT	ELECTRONIC FILE DESCRIPTION
APP-GW-GLR-134_R5_Public.doc	Microsoft Word	

☒ **© 2008 WESTINGHOUSE ELECTRIC COMPANY LLC – WESTINGHOUSE NON-PROPRIETARY CLASS 3**

Class 3 Documents being transmitted to the NRC require the following two review signatures in lieu of a Form 36.

LEGAL REVIEW T. J. White\L.A. Campagna	SIGNATURE / DATE Lisa A Campagna 6-27-08
PATENT REVIEW Douglas Ekeroth/M. M. Corletti	SIGNATURE / DATE M.M. Corletti 6-27-08

☐ **© 2008 WESTINGHOUSE ELECTRIC COMPANY LLC – WESTINGHOUSE PROPRIETARY CLASS 2**

This document is the property of and contains Proprietary Information owned by Westinghouse Electric Company LLC and/or its subcontractors and suppliers. It is transmitted to you in confidence and trust, and you agree to treat this document in strict accordance with the terms and conditions of the agreement under which it was provided to you.

☐ **© 2008 WESTINGHOUSE ELECTRIC COMPANY LLC and/or STONE & WEBSTER, INC.**

WESTINGHOUSE PROPRIETARY CLASS 2 and/or STONE & WEBSTER CONFIDENTIAL AND PROPRIETARY

This document is the property of and contains Proprietary Information owned by Westinghouse Electric Company LLC and/or is the property of and contains Confidential and Proprietary Information owned by Stone & Webster, Inc. and/or their affiliates, subcontractors and suppliers. It is transmitted to you in confidence and trust, and you agree to treat this document in strict accordance with the terms and conditions of the agreement under which it was provided to you.

ORIGINATOR(S) Monte Bartley	SIGNATURE / DATE Monte D Bartley 6/27/08	
REVIEWER(S) Tamara Morante	SIGNATURE / DATE Tamara J Morante 6/27/08	
	SIGNATURE / DATE	
	SIGNATURE / DATE	
VERIFIER(S) Don Lindgren	SIGNATURE / DATE D G Lindgren 6/27/08	Verification Method: Independent Review

Plant Applicability: ☒ All AP1000 plants except: No Execptions

☐ Only the following plants:

APPLICABILITY REVIEWER** J. A. Speer	SIGNATURE / DATE James A Speer 6/27/08
RESPONSIBLE MANAGER* Robert Sisk	SIGNATURE / DATE Robert Sisk 6/27/08

* Approval of the responsible manager signifies that the document and all required reviews are complete, the appropriate proprietary class has been assigned, electronic file has been provided to the EDMS, and the document is released for use.

****** Electronically approved records are authenticated in the electronic document management system.***

APP-GW-GLR-134
Revision 5 **June 2008**

AP1000 Standard Combined License Technical Report

AP1000 DCD Impacts to Support COLA Standardization

Contains sensitive unclassified nonsafeguards information relative to the physical protection of an AP1000 nuclear plant that should be withheld from public disclosure pursuant to 10 CFR 2.390(d).

Westinghouse Electric Company LLC
Nuclear Power Plants
Post Office Box 355
Pittsburgh, PA 15230-0355

©2008 Westinghouse Electric Company LLC
All Rights Reserved

REVISION HISTORY

Revision	Author	Change Description
0	Monte Bartley	Original Issue
1	Monte Bartley	Incorporated Tier 1 changes related to the seismic design spectra changes to address hard rock high frequency exceedances and to provide conformance with previous DCD Tier 2 changes. The Revision 1 changes are contained in separate Attachment A and Attachment B sections at the end of the document.
2	Monte Bartley	Incorporated changes to address NRC acceptance issues. The Revision 2 changes are contained in separate Attachment A and Attachment B sections at the end of the document.
3	Monte Bartley	Incorporated changes to address NRC acceptance issues. The Revision 3 changes are contained in separate Attachment A and Attachment B sections at the end of the document.
4	Monte Bartley	Incorporated changes to address lateral variability interface, annex building office expansion, and clarification of condenser stack location. The Revision 4 changes are contained in separate Attachment A and Attachment B sections at the end of the document.
5	Monte Bartley	Incorporated changes to bound increased wet bulb temperature and annual precipitation. The Revision 5 changes are contained in separate Attachment A and Attachment B sections at the end of the document.

TABLE OF CONTENTS

REVISION HISTORY i
TABLE OF CONTENTS ii
LIST OF ATTACHMENTS iii
INTRODUCTION 1
REGULATORY IMPACT 1
DCD MARK-UP 2

LIST OF ATTACHMENTS

Attachment A – AP1000 DCD Impact Report
Sorted by DCD Chapter and Section in the order of Tier 1, Tier 2*, Tier 2

Attachment B – AP1000 DCD, Revision 16, Mark-Up pages
Sorted by DCD Chapter and Section in the order of Tier 1, Tier 2*, Tier 2

LIST OF TABLES

None

LIST OF FIGURES

None

INTRODUCTION

In support of the Combined License application pre-application activities, Westinghouse is submitting Technical Report APP-GW-GLR-134 (TR 134), "AP1000 DCD Impacts to Support COLA Standardization." The purpose of this technical report is to identify impacts to the "AP1000 Design Control Document," APP-GW-GL-700, Revision 16. The impacts, which occurred or were discovered subsequent to the submittal of the DCD in support of the AP1000 design certification amendment, may be in the form of: DCD discrepancies; responses to requests for additional information (RAIs) issued against prior technical reports, where those responses contain DCD changes; and correction of typographical errors and other minor corrections. This report addresses DCD Revision 16 impacts for Tier 1, Tier 2*, and Tier 2. This document is provided to track the DCD impacts and thereby maintain consistency between the AP1000 Design Certification Amendment Application and the COL applications that reference the AP1000 Design Certification Rulemaking. The impacts included in this document will be incorporated into the AP1000 DCD in a forthcoming revision.

The markups in "Attachment B" of this report are in addition to the changes indicated in "AP1000 Design Control Document," APP-GW-GL-700, Revision 16 (i.e., the change bars in "Attachment B" assume the changes identified in Revision 16 of the DCD have been made). Accordingly, the full set of changes from DCD Revision 15 are represented by the changes identified in DCD Revision 16 plus the changes identified in "Attachment B" of this report.

This report is submitted as part of the NuStart Standard Plant COL Project (Project Number 740). The information in this report is standard and is expected to apply to all COL applications referencing the AP1000 Design Certification. The impacts to DCD Revision 16 identified in this technical report are documented via attachments to the relevant RAI responses, and markups indicating DCD discrepancies along with their resolutions.

This technical report will be revised as necessary to address any future impacts to the DCD, and Westinghouse and the AP1000 Design Centered Work Group will continue working closely with the NRC Staff to coordinate updates. The technical report is intended to serve as a tracking matrix, linking each DCD Impact to the applicable supporting documentation provided in other technical reports and RAI responses (note that, for certain minor corrections such as editorial changes where no regulatory impact is anticipated, no supporting documentation reference is necessary).

REGULATORY IMPACT

Those portions of the design-related information contained in the AP1000 Design Control Document that have been approved and certified by the NRC are identified as "Tier 1." The technical and regulatory basis for the Tier 1 changes is provided in the referenced technical reports and RAI Responses in "Attachment A" of this report.

Those portions of the design-related information subject to the change process in Section VIII of the AP1000 design certification rule are identified as "Tier 2". The impacts identified as "Tier 2" have been evaluated using the 10 CFR 52 Appendix D Section VIII criteria to determine whether NRC prior approval is required. While the screening results indicate that prior approval would not be required for a COL applicant, Westinghouse is including these changes in the Design Certification Rulemaking Amendment Application to support standardization of the AP1000 design. The technical and regulatory bases for these changes are provided in the referenced technical reports and RAI responses in "Attachment A" of this report.

The identification of Tier 2* information in this technical report is consistent with the information contained in Table 1-1 of the "AP1000 Design Control Document," APP-GW-GL-700, Revision 16. The technical and regulatory basis for the Tier 2* changes is provided in the referenced technical reports and RAI Responses summarized in "Attachment A" of this report.

Additionally, those items identified as minor corrections include editorial changes and conforming or consistency changes which have no significant impact to the DCD. These changes are also described in "Attachment A" of this report.

DCD MARK-UP

"Attachment A" of this report contains a database report that identifies the impacts to Revision 16 of the DCD. The entries are sorted numerically, by Chapter and Section. Included with each item in the report is a list of related reference items and a description of the impact (as discussed above). The reference items include a sequential tracking number for each impact in the format "NRC*nnn*" (for cross-reference purposes), references to applicable technical reports, and references to previously submitted relevant RAI responses. The impacts also are ordered by Tier 1, Tier 2*, Tier 2.

"Attachment B" of this report contains the mark-up pages to "AP1000 Design Control Document," APP-GW-GL-700, Revision 16. The pages use a "track changes" format, showing deleted text with a "strike-through," new text underlined, vertical change bars in the left margin, and the sequential tracking number (NRC*nnn*) to the left of the change bar. The sequential tracking number links the change information contained in the database report from "Attachment A" to the location of the change in the DCD. The mark-up pages are sorted by Chapter and Section and grouped as Tier 1, Tier 2*, Tier 2.

REFERENCES

1. Westinghouse AP1000 document APP-GW-GL-700, Revision 16, "AP1000 Design Control Document."

ATTACHMENT A

Tier 1

Attachment A

AP1000 DCD Impact Report

APP-GW-GL-700, Revision 16, "AP1000 Design Control Document"

DCD Section	*Westinghouse Status*	*Tracking Number*	*DCD Category*	*Change Criteria*
2.2.1, Table 2.2.1-3	**Accepted for Revision 17**	**NRC176**	**Tier 1**	**NRC Prior Approval Required**

Description:

NRC175 contains corrections to Tier 1 Section 2.2.1 and Table 2.2.1-3 to be consistent with RAI-TR93-ICE2-07

Reference Information:

RAI-TR93-ICE2-07

DCD Section	*Westinghouse Status*	*Tracking Number*	*DCD Category*	*Change Criteria*
2.6.1-1	**Accepted for Revision 17**	**NRC078**	**Tier 1**	**Requires Prior NRC Approval**

Description:

NRC078 contains corrections to Figure 2.6.1-1 of DCD Revision 16 to be consistent with APP-GW-GLN-114 (TR114) and APP-GW-GLN-079 (TR79).

Reference Information:

APP-GW-GLN-079 (TR79), Rev 1; APP-GW-GLN-114 (TR114), Rev 0

Attachment A

AP1000 DCD Impact Report

APP-GW-GL-700, Revision 16, "AP1000 Design Control Document"

DCD Section	*Westinghouse Status*	*Tracking Number*	*DCD Category*	*Change Criteria*
3.5-5, 3.5-7	**Accepted for Revision 17**	**NRC051**	**Tier 1**	**Requires Prior NRC Approval**

Description:

NRC051 contains corrections to Tier 1 Table 3.5-5 and Table 3.5-7 of DCD Revision 16 to change "Technical Support Center" to "CSA".

Reference Information:

APP-GW-GLR-107 (TR107), Rev 1 **RAI-TR107-NSIR-02**

DCD Section	*Westinghouse Status*	*Tracking Number*	*DCD Category*	*Change Criteria*
3.5-5, 3.5-7, 7.5-1, 9.4, 9A, 11.5, 13.3, 14.2	**Accepted for Revision 17**	**NRC123 (Tier 1 - Chapt 3)**	**Tier 1**	**Requires Prior NRC Approval**

Description:

NRC123 contains corrections to change "technical support center" to "control support area" to be consistent with TR107, APP-GW-GLR-107.

Reference Information:

APP-GW-GLR-107 (TR107), Rev 1 **RAI-TR107-NSIR-02**

Attachment A

AP1000 DCD Impact Report

APP-GW-GL-700, Revision 16, "AP1000 Design Control Document"

DCD Section	*Westinghouse Status*	*Tracking Number*	*DCD Category*	*Change Criteria*
5.0-1	**Accepted for Revision 17**	**NRC144**	**Tier 1**	**Requires Prior NRC Approval**

Description:

NRC144 contains corrections to Tier 1 Table 5.0-1 of DCD Revision 16 to be consistent with TR122, APP-GW-GLN-122.

Reference Information:

APP-GW-GLN-122 (TR122),
Rev 0

ATTACHMENT A

Tier 2*

Attachment A

AP1000 DCD Impact Report

APP-GW-GL-700, Revision 16, "AP1000 Design Control Document"

DCD Section	*Westinghouse Status*	*Tracking Number*	*DCD Category*	*Change Criteria*
3H.5-9	**Accepted for Revision 17**	**NRC094 (Tier 2*)**	**Tier 2* (Star)**	**NRC Prior Approval Required**

Description:

NRC 094 contains corections to Figure 3H.5-9 sheet 1 and Figure 3H.5-12 of the DCD Revision 16 to be consistent with TR 57, APP-GW-GLR-045, Rev 0.

Reference Information:

APP-GW-GLR-045 (TR57), Rev 0

DCD Section	*Westinghouse Status*	*Tracking Number*	*DCD Category*	*Change Criteria*
4.1.1	**Accepted for Revision 17**	**NRC103 (Tier 2*)**	**Tier 2* (Star)**	**NRC Prior Approval Would Have Been Required**

Description:

NRC103 contains corrections to Tier 2 - Chapter 4 of DCD Revision 16 to be consistent with Technical Report TR30, APP-GW-GLN-013. [Note: This portion of Chapter 4 was Tier 2* (Star) in DCD Revision 15] - Sequential "Tracking Number" NRC103 also appears in the Tier 2 Impact Report. The actual changes are in the Attachment B, Tier 2 mark-up pages.

Reference Information:

APP-GW-GLN-013 (TR30), Rev 0

Attachment A

AP1000 DCD Impact Report

APP-GW-GL-700, Revision 16, "AP1000 Design Control Document"

DCD Section	*Westinghouse Status*	*Tracking Number*	*DCD Category*	*Change Criteria*
7.7.1.11	**Accepted for Revision 17**	**NRC111 (Tier 2*)**	**Tier 2* (Star)**	**NRC Prior Approval Required**

Description:

Corrections to Section 7.7.1.11 (Tier 2*), consistent with APP-GW-GLR-080, Rev.0 is included in Revision 16 of the DCD

Reference Information:

APP-GW-GLR-080 (TR80), Rev 0

ATTACHMENT A

Tier 2

Chapter 1

Attachment A

AP1000 DCD Impact Report

APP-GW-GL-700, Revision 16, "AP1000 Design Control Document"

DCD Section	*Westinghouse Status*	*Tracking Number*	*DCD Category*	*Change Criteria*
1.1.7	**Accepted for Revision 17**	**NRC130**	**Tier 2**	**NRC Prior Approval Not Required**

Description:

NRC130 contains an editorial correction (restoration to Rev 15 wording) due to the rejection of Technical Report APP-GW-GLR-036

Reference Information:

APP-GW-GLR-036 (TR01), Rev 0

DCD Section	*Westinghouse Status*	*Tracking Number*	*DCD Category*	*Change Criteria*
1.2	**Accepted for Revision 17**	**NRC106 (Chapt 1)**	**Tier 2**	**NRC Prior Approval Not Required**

Description:

NRC106 contains corrections to Figure 1.2-1, 5.1-2 and Figure 1.2-9. The basis for the change is TR36 APP-GW-GLR-016.

Reference Information:

APP-GW-GLR-016 (TR36), Rev 0

Attachment A

AP1000 DCD Impact Report

APP-GW-GL-700, Revision 16, "AP1000 Design Control Document"

DCD Section	Westinghouse Status	Tracking Number	DCD Category	Change Criteria
1.2	**Accepted for Revision 17**	**NRC107**	**Tier 2**	**NRC Prior Approval Not Required**

Description:

NRC107 contains corrections to Figure 1.2-9. The basis for the change is TR61 APP-GW-GLN-014.

Reference Information:

APP-GW-GLN-014 (TR 61), Rev 0

DCD Section	Westinghouse Status	Tracking Number	DCD Category	Change Criteria
1.3-1	**Accepted for Revision 17**	**NRC147**	**Tier 2**	**NRC Prior Approval Not Required**

Description:

NRC 147 contains changes to Table 1.3-1 sheet 1 to be consistent with Section 1.2.1.1.1.

Reference Information:

Attachment A

AP1000 DCD Impact Report

APP-GW-GL-700, Revision 16, "AP1000 Design Control Document"

DCD Section	Westinghouse Status	Tracking Number	DCD Category	Change Criteria
1.6-1	**Accepted for Revision 17**	**NRC153**	**Tier 2**	**NRC Prior Approval Not Required**

Description:

NRC 153 contains editorial changes to Table 1.6-1 sheet 12 to be consistent with APP-GW-GLR-080, Rev 0.

Reference Information:

APP-GW-GLR-080 (TR80), Rev 0

DCD Section	Westinghouse Status	Tracking Number	DCD Category	Change Criteria
1.7	**Accepted for Revision 17**	**NRC110**	**Tier 2**	**NRC Prior Approval Not Required**

Description:

NRC110 contains an editorial correction to reference Figure 7.2-1

Reference Information:

Attachment A

AP1000 DCD Impact Report

APP-GW-GL-700, Revision 16, "AP1000 Design Control Document"

DCD Section	*Westinghouse Status*	*Tracking Number*	*DCD Category*	*Change Criteria*
1.8-2, 4.4.7	**Accepted for Revision 17**	**NRC102 (Chapt 1)**	**Tier 2**	**NRC Prior Approval Not Required**

Description:

NRC102 contains corrections to Table 1.8-2 and Sub-section 4.4.7 of DCD Revision 16 to be consistent with Technical Report TR59, APP-GW-GLR-059 and TR130, APP-GW-GLR-130.

Reference Information:

APP-GW-GLR-059 (TR18), Rev 0,
APP-GW-GLR-130 (TR130), Rev 0

DCD Section	*Westinghouse Status*	*Tracking Number*	*DCD Category*	*Change Criteria*
1.8-2	**Accepted for Revision 17**	**NRC127**	**Tier 2**	**NRC Prior Approval Not Required**

Description:

NRC127 contains editorial changes to Table 1.8-2.

Reference Information:

Attachment A

AP1000 DCD Impact Report

APP-GW-GL-700, Revision 16, "AP1000 Design Control Document"

DCD Section	Westinghouse Status	Tracking Number	DCD Category	Change Criteria
1.8-2	**Accepted for Revision 17**	**NRC124**	**Tier 2**	**NRC Prior Approval Not Required**

Description:

NRC124 contains editorial changes to Table 1.8-1 sheet 12 to be consistent with APP-GW-GLR-012

Reference Information:

APP-GW-GLR-012 (TR72), Rev 0

DCD Section	Westinghouse Status	Tracking Number	DCD Category	Change Criteria
1.8-2	**Accepted for Revision 17**	**NRC175**	**Tier 2**	**NRC Prior Approval Not Required**

Description:

NRC175 contains corrections to Table 1.8-2 of DCD Revision 16 to be consistent with APP-GW-GLR-136 (TR136), Rev 0

Reference Information:

APP-GW-GLR-136 (TR136), Rev 0

AP1000 DCD Impact Report

APP-GW-GL-700, Revision 16, "AP1000 Design Control Document"

DCD Section	Westinghouse Status	Tracking Number	DCD Category	Change Criteria
1.8-2	**Accepted for Revision 17**	**NRC126**	**Tier 2**	**NRC Prior Approval Not Required**

Description:

NRC126 contains changes to Table 1.8-2 sheet 12 to be consistent with APP-GW-GLR-081 and APP-GW-GLR-090

Reference Information:

APP-GW-GLR-081 (TR81), Rev 0;
APP-GW-GLR-090 (TR90), Rev 0

DCD Section	Westinghouse Status	Tracking Number	DCD Category	Change Criteria
1.8-2	**Accepted for Revision 17**	**NRC125**	**Tier 2**	**NRC Prior Approval Not Required**

Description:

NRC124 contains changes to Table 1.8-2 sheet 12 to be consistent with APP-GW-GLR-010 and APP-GW-GLR-090

Reference Information:

APP-GW-GLR-010 (TR52), Rev 2,
APP-GW-GLR-090 (TR90), Rev 0

Attachment A

AP1000 DCD Impact Report

APP-GW-GL-700, Revision 16, "AP1000 Design Control Document"

DCD Section	*Westinghouse Status*	*Tracking Number*	*DCD Category*	*Change Criteria*
1.9.5.1.15, 3.9.6, 3.9-16, 5.2.4, 6.6	**Accepted for Revision 17**	**NRC148 (Chapt 1)**	**Tier 2**	**NRC Prior Approval Not Required**

Description:

NRC 148 contains changes to Sections 1.9.5.1.15, 3.9.3.4.3, 3.9.3.4.4, 3.9.6, 3.9.6.2, 3.9.6.2.1, 3.9.6.2.2, 3.9.6.2.3, 3.9.6.3, Table 3.9-16 and 6.6 of the DCD Revision 16 to be consistent with APP-GW-GLN-138

Reference Information:

APP-GW-GLN-138 (TR138), Rev 0

DCD Section	*Westinghouse Status*	*Tracking Number*	*DCD Category*	*Change Criteria*
1.9-1	**Accepted for Revision 17**	**NRC141**	**Tier 2**	**NRC Prior Approval Not Required**

Description:

NRC141 contains corrections to Table 1.9-1 to be consistent with APP-GW-GLN-141

Reference Information:

APP-GW-GLN-141 (TR141), Rev 0

AP1000 DCD Impact Report

APP-GW-GL-700, Revision 16, "AP1000 Design Control Document"

DCD Section	Westinghouse Status	Tracking Number	DCD Category	Change Criteria
1.9	**Accepted for Revision 17**	**NRC172**	**Tier 2**	**NRC Prior Approval Not Required**

Description:

NRC172 contains changes to Table 1.9-1 to be consistent with RAI-TR44-020.

Reference Information:

RAI-TR44-020

DCD Section	Westinghouse Status	Tracking Number	DCD Category	Change Criteria
1A	**Accepted for Revision 17**	**NRC140**	**Tier 2**	**NRC Prior Approval Not Required**

Description:

NRC140 contained the following changes based on technical report APP-GW-GLN-141:
Reg Guide 1.27, Conformance for Criteria C.4 added
Reg Guide 1.32, Change N/A to Exception and revised discussion. (Criteria is addressed in the Tech Specs Bases.)
Reg Guide 1.54, Corrected Title and Date.
Reg Guide 1.197, Added
Reg Guide 1.98, Typographical change "4.3 to 4.e"

Reference Information:

APP-GW-GLN-141 (TR141), Rev 0

AP1000 DCD Impact Report

APP-GW-GL-700, Revision 16, "AP1000 Design Control Document"

DCD Section	Westinghouse Status	Tracking Number	DCD Category	Change Criteria
1A	**Accepted for Revision 17**	**NRC105**	**Tier 2**	**NRC Prior Approval Not Required**

Description:

NRC105 contains corrections to remove the reference to NQA-2 in the discussion of Reg Guide 1.28. This change is to maintain consistency with APP-GW-GLR-109.

Reference Information:

APP-GW-GLR-109 (TR109), Rev 0

DCD Section	Westinghouse Status	Tracking Number	DCD Category	Change Criteria
1A	**Accepted for Revision 17**	**NRC060**	**Tier 2**	**NRC Prior Approval Not Required**

Description:

NRC060 contains changes to Reg Guide 1.44 to maintain consistency with APP-GW-GLN-141.

Reference Information:

APP-GW-GLN-141 (TR141), Rev 0

Chapter 2

Attachment A

AP1000 DCD Impact Report

APP-GW-GL-700, Revision 16, "AP1000 Design Control Document"

DCD Section	*Westinghouse Status*	*Tracking Number*	*DCD Category*	*Change Criteria*
2.5	**Accepted for Revision 17**	**NRC046**	**Tier 2**	**NRC Prior Approval Not Required**

Description:

NRC046 contains corrections to Section 2.5 of DCD Revision 16 to be consistent with technical report TR03, APP-GW-S2R-010

Reference Information:

APP-GW-S2R-010 (TR03), Rev 1 **RAI-TR03-019 R1**

DCD Section	*Westinghouse Status*	*Tracking Number*	*DCD Category*	*Change Criteria*
2.5.4.5.3	**Accepted for Revision 17**	**NRC049**	**Tier 2**	**NRC Prior Approval Not Required**

Description:

NRC049 contains corrections to Section 2.5.4.5.1 of DCD Revision 16 to be consistent with RAI-TR85-SEB1-38

Reference Information:

APP-GW-GLR-044 (TR85), Rev 0 **RAI-TR85-SEB1-38**

Attachment A

AP1000 DCD Impact Report

APP-GW-GL-700, Revision 16, "AP1000 Design Control Document"

DCD Section	Westinghouse Status	Tracking Number	DCD Category	Change Criteria
2-1	**Accepted for Revision 17**	**NRC129**	**Tier 2**	**NRC Prior Approval Not Required**

Description:

NRC129 contains an editorial clarification to Table 2-1 to change "none" to "negligible" for the Fault Displacement Potential.

Reference Information:

DCD Section	Westinghouse Status	Tracking Number	DCD Category	Change Criteria
Table 2-1	**Accepted for Revision 17**	**NRC171**	**Tier 2**	**NRC Prior Approval Not Required**

Description:

NRC171 contains additions to Table 2-1 to be consistent with RAI-TR85-SEB1-37.

Reference Information:

RAI-TR85-SEB1-37

Attachment A

AP1000 DCD Impact Report

APP-GW-GL-700, Revision 16, "AP1000 Design Control Document"

DCD Section	*Westinghouse Status*	*Tracking Number*	*DCD Category*	*Change Criteria*
2-1	**Accepted for Revision 17**	**NRC143**	**Tier 2**	**NRC Prior Approval Not Required**

Description:

NRC143 contains editorial corrections to Table 2-1 of DCD Revision 16 to be consistent with TR122, APP-GW-GLN-122.

Reference Information:

APP-GW-GLN-122 (TR122), Rev 0

Chapter 3

Attachment A

AP1000 DCD Impact Report

APP-GW-GL-700, Revision 16, "AP1000 Design Control Document"

DCD Section	Westinghouse Status	Tracking Number	DCD Category	Change Criteria
3.1.3	**Accepted for Revision 17**	**NRC154**	**Tier 2**	**NRC Prior Approval Not Required**

Description:

NRC 154 contains changes to Section 3.1.3 Criterion 20 - Protection Systems Function under AP 1000 Compliance of the DCD Revision to be consistent with APP-GW-GLR-080, Rev 0.

Reference Information:

APP-GW-GLR-080 (TR80), Rev 0

DCD Section	Westinghouse Status	Tracking Number	DCD Category	Change Criteria
3.2.2.5	**Accepted for Revision 17**	**NRC164**	**Tier 2**	**NRC Prior Approval Not Required**

Description:

NRC164 contains a correction to Section 3.2.2.5 identiying a random selection of welds for consistency with discussion in 3.2.2.5 and RG 1.26 assessment in Appendix 1A.

Reference Information:

AP1000 DCD Impact Report

APP-GW-GL-700, Revision 16, "AP1000 Design Control Document"

DCD Section	Westinghouse Status	Tracking Number	DCD Category	Change Criteria
3.2.3	**Accepted for Revision 17**	**NRC117**	**Tier 2**	**NRC Prior Approval Not Required**

Description:

NRC 117 contains corrections to Section 3.2.3 of the DCD Revision 16 changing the code reference for the inspection of pumps and valves to ASME Code, Section XI, Subsections IWB, IWC, and IWD to be consistent with DCD Section 6.6.

Reference Information:

DCD Section	Westinghouse Status	Tracking Number	DCD Category	Change Criteria
Table 3.2-3, Figure 3.8.2-4	**Accepted for Revision 17**	**NRC044**	**Tier 2**	**NRC Prior Approval Not Required**

Description:

NRC044 contains corrections to Table 3.2-3, Figure 3.8.2-4 of DCD Revision 16. The basis for the change is RAI-TR09-003.

Reference Information:

RAI-TR09-003

AP1000 DCD Impact Report

APP-GW-GL-700, Revision 16, "AP1000 Design Control Document"

DCD Section	Westinghouse Status	Tracking Number	DCD Category	Change Criteria
3.5.1.6	**Accepted for Revision 17**	**NRC075**	**Tier 2**	**NRC Prior Approval Not Required**

Description:

NRC 075 added the sentence "Aircraft crash probability and the effects of this hazard on the plant is determined as described in Section 2.2." to Section 3.5.1.6 for clarity.

Reference Information:

DCD Section	Westinghouse Status	Tracking Number	DCD Category	Change Criteria
3.7	**Accepted for Revision 17**	**NRC168**	**Tier 2**	**NRC Prior Approval Not Required**

Description:

NRC168 contains changes to Section 3.7 to be consisten with APP-GW-S2R-010 (TR3), Rev. 1

Reference Information:

APP-GW-S2R-010 (TR3), Rev. 1

AP1000 DCD Impact Report

APP-GW-GL-700, Revision 16, "AP1000 Design Control Document"

DCD Section	Westinghouse Status	Tracking Number	DCD Category	Change Criteria
3.8.2.1.5	**Accepted for Revision 17**	**NRC057**	**Tier 2**	**NRC Prior Approval Not Required**

Description:

NRC057 contains corrections to Section 3.8.2.1.5 of the DCD Revision 16 so that it now references Table 6.2.3-1.

Reference Information:

DCD Section	Westinghouse Status	Tracking Number	DCD Category	Change Criteria
3.8	**Accepted for Revision 17**	**NRC097**	**Tier 2**	**NRC Prior Approval Not Required**

Description:

NRC097 contains changes to the text of Section 3.8 of the DCD Revision 16 to be consistent with APP-GW-GLN-079 (TR79). It also contains figure changes in Section 3.8 of the DCD Revision 16 to be consistent with APP-GW-GLR-016 (TR 36).

Reference Information:

APP-GW-GLR-016 (TR36), Rev 0;
APP-GW-GLN-079 (TR79), Rev 1

AP1000 DCD Impact Report

APP-GW-GL-700, Revision 16, "AP1000 Design Control Document"

DCD Section	Westinghouse Status	Tracking Number	DCD Category	Change Criteria
3.8.2.1.6	**Accepted for Revision 17**	**NRC058**	**Tier 2**	**NRC Prior Approval Not Required**

Description:

NRC058 contains corrections to Section 3.8.2.1.6 of the DCD revision 16 so that it now references section 8.3.1.1.6.

Reference Information:

DCD Section	Westinghouse Status	Tracking Number	DCD Category	Change Criteria
3.8.2.6, 5.2-3	**Accepted for Revision 17**	**NRC093 (Chapt 3)**	**Tier 2**	**NRC Prior Approval Not Required**

Description:

NRC093 contains corrections to Section 3.8.2.6 and Figure 5.2-3 of DCD Revision 16 to be consistent with Technical Report TR113, APP-GW-GLN-113.

Reference Information:

APP-GW-GLN-113 (TR113), Rev 0

AP1000 DCD Impact Report

APP-GW-GL-700, Revision 16, "AP1000 Design Control Document"

DCD Section	Westinghouse Status	Tracking Number	DCD Category	Change Criteria
3.8.4.3.1.3	**Accepted for Revision 17**	**NRC059**	**Tier 2**	**NRC Prior Approval Not Required**

Description:

NRC059 contains corrections to Section 3.8.4.3.1.3 of the DCD Revision 16 so that it now references Table 2-1.

Reference Information:

DCD Section	Westinghouse Status	Tracking Number	DCD Category	Change Criteria
3.8.5.5.4	**Accepted for Revision 17**	**NRC134**	**Tier 2**	**NRC Prior Approval Not Required**

Description:

NRC 134 contains changes to Section 3.8.5.5.4 and Table 3.8.5-2 of the DCD Revision 16 to be consistent with RAI-TR85-SEB1-034, Rev 0. Deleted "Hard Rock Condition" from the title of Table 3.8.5-2 consistent with RAI-TR85-SEB1-028

Reference Information:

RAI-TR85-SEB1-028, RAI-TR85-SEB1-034

AP1000 DCD Impact Report

APP-GW-GL-700, Revision 16, "AP1000 Design Control Document"

DCD Section	Westinghouse Status	Tracking Number	DCD Category	Change Criteria
3.8	**Accepted for Revision 17**	**NRC056**	**Tier 2**	**NRC Prior Approval Not Required**

Description:

NRC056 contains changes to Table 3.8.2-1 in the DCD Revision 16 to be consistent with TR09, APP-GW-GLR-005.

Reference Information:

APP-GW-GLR-005 (TR09), Rev 1

DCD Section	Westinghouse Status	Tracking Number	DCD Category	Change Criteria
1.9.5.1.15, 3.9.3, 3.9.6, 3.9-16, 3D, 5.2.4, 6.6	**Accepted for Revision 17**	**NRC148 (Chapt 3)**	**Tier 2**	**NRC Prior Approval Not Required**

Description:

NRC 148 contains changes to Sections 1.9.5.1.15, 3.9.3.4.3, 3.9.3.4.4, 3.9.3, 3.9.6, 3.9.6.2, 3.9.6.2.1, 3.9.6.2.2, 3.9.6.2.3, 3.9.6.3, Table 3.9-16, 3D, and 6.6 of the DCD Revision 16 to be consistent with APP-GW-GLN-138, Rev 0

Reference Information:

APP-GW-GLN-138 (TR138), Rev 0

AP1000 DCD Impact Report

APP-GW-GL-700, Revision 16, "AP1000 Design Control Document"

DCD Section	Westinghouse Status	Tracking Number	DCD Category	Change Criteria
Table 3.9-17	**Accepted for Revision 17**	**NRC151**	**Tier 2**	**NRC Prior Approval Not Required**

Description:

NRC 151 contains changes to Table 3.9-17 of the DCD Revision 16 to be consistent with APP-GW-GLR-007.

Reference Information:

APP-GW-GLR-007 (TR27), Rev 1

DCD Section	Westinghouse Status	Tracking Number	DCD Category	Change Criteria
Appendix 3D	**Accepted for Revision 17**	**NRC062**	**Tier 2**	**NRC Prior Approval Not Required**

Description:

NRC062 updates page 3D-76 to remove reference to the technical specifications for in-service inspections. Format corrections were made to Table 3.11-1 sheet 31. Grammatical corrections were made to section 3D.6.3 and 3D.6.5.1. Correction made to Table 3.11-1 sheet 26 to be consistent with DCD Figure 5.4-7.

Reference Information:

AP1000 DCD Impact Report

APP-GW-GL-700, Revision 16, "AP1000 Design Control Document"

DCD Section	Westinghouse Status	Tracking Number	DCD Category	Change Criteria
3G	**Accepted for Revision 17**	**NRC041**	**Tier 2**	**NRC Prior Approval Not Required**

Description:

NRC041 contains editorial changes to Appendix 3G of the DCD Revision 16 to be consistent with RAI-TR03-013, Rev 1 and APP-GW-S2R-010, Rev 1.

Reference Information:

APP-GW-S2R-010 (TR03), Rev 1 **RAI-TR03-013 R1**

DCD Section	Westinghouse Status	Tracking Number	DCD Category	Change Criteria
3G	**Accepted for Revision 17**	**NRC011**	**Tier 2**	**NRC Prior Approval Not Required**

Description:

NRC011 contains changes to Appendix 3G of the DCD Revision 16 to be consistent with RAI-TR03-013, Rev A and APP-GW-S2R-010, Rev 1.

Reference Information:

APP-GW-S2R-010 (TR03), Rev 1 **RAI-TR03-013**

AP1000 DCD Impact Report

APP-GW-GL-700, Revision 16, "AP1000 Design Control Document"

DCD Section	Westinghouse Status	Tracking Number	DCD Category	Change Criteria
3G	**Accepted for Revision 17**	**NRC169**	**Tier 2**	**NRC Prior Approval Not Required**

Description:

NRC169 contains changes to Appendix 3G based on APP-GW-S2R-010 (TR03), Rev 1

Reference Information:

APP-GW-S2R-010 (TR03), Rev 1

DCD Section	Westinghouse Status	Tracking Number	DCD Category	Change Criteria
3I	**Accepted for Revision 17**	**NRC163**	**Tier 2**	**NRC Prior Approval Not Required**

Description:

NRC163 replaces "Bellefonte" in APP 3I with "Hard Rock High Frequency (HRHF)" Add figure updates per APP-GW-GLR-115 (TR115). Screening Process Group No. 3 under 3I.6.4 is revised per APP-GW-GLR-115 (TR115).

Reference Information:

APP-GW-GLR-115 (TR115), Rev 0

Chapter 4

Attachment A

AP1000 DCD Impact Report

APP-GW-GL-700, Revision 16, "AP1000 Design Control Document"

DCD Section	*Westinghouse Status*	*Tracking Number*	*DCD Category*	*Change Criteria*
4.1.1	**Accepted for Revision 17**	**NRC103**	**Tier 2**	**NRC Prior Approval Not Required**

Description:

NRC103 contains corrections to Chapter 4 of DCD Revision 16 to be consistent with Technical Report TR30, APP-GW-GLN-013.

Reference Information:

APP-GW-GLN-013 (TR30), Rev 0

DCD Section	*Westinghouse Status*	*Tracking Number*	*DCD Category*	*Change Criteria*
Table 4.2-6	**Accepted for Revision 17**	**NRC165**	**Tier 2**	**NRC Prior Approval Not Required**

Description:

NRC165 contains addition of fuel rod dia to Figure 4.2-6 to be consistent with RAI-TR18-SRSB-06

Reference Information:

RAI-TR18-SRSB-06

Attachment A

AP1000 DCD Impact Report

APP-GW-GL-700, Revision 16, "AP1000 Design Control Document"

DCD Section	*Westinghouse Status*	*Tracking Number*	*DCD Category*	*Change Criteria*
4.3.2.4.16	**Accepted for Revision 17**	**NRC160**	**Tier 2**	**NRC Prior Approval Not Required**

Description:

NRC160 contains corrections to Sub-section 4.3.2.4.16 of DCD Revision 16 to be consistent with Technical Report TR80, APP-GW-GLR-080.

Reference Information:

APP-GW-GLR-080 (TR80), Rev 0

DCD Section	*Westinghouse Status*	*Tracking Number*	*DCD Category*	*Change Criteria*
4.3.2.6.1, 9.1.6	**Accepted for Revision 17**	**NRC104 (Chapt 4)**	**Tier 2**	**NRC Prior Approval Not Required**

Description:

NRC104 contains changes to Section 4.3.2.6.1 to be consistent with APP-GW-GLR-030 (TR67). Note: The formula was inadvertently deleted in TR67 without the use of strikeout. The DCD Attachment A markup pages correctly shows the formula deletion by strikeout.

Reference Information:

APP-GW-GLR-030 (TR67), Rev 0

Attachment A

AP1000 DCD Impact Report

APP-GW-GL-700, Revision 16, "AP1000 Design Control Document"

DCD Section	Westinghouse Status	Tracking Number	DCD Category	Change Criteria
4.4.2.11.6	**Accepted for Revision 17**	**NRC167**	**Tier 2**	**NRC Prior Approval Not Required**

Description:

NRC167 contains corrections to Section 4.4.2.11.6 to change less than 22.45kW/ft to less than or equal to 22.5kW/ft. Add greater than to … melt is 22.5kW/ft… The basis for the change is RAI-TR18-SRSB-09

Reference Information:

RAI-TR18-SRSB-09

DCD Section	Westinghouse Status	Tracking Number	DCD Category	Change Criteria
Table 1.8-2, 4.4.7	**Accepted for Revision 17**	**NRC102 (Chapt 4)**	**Tier 2**	**NRC Prior Approval Not Required**

Description:

NRC102 contains corrections to Table 1.8-2 and Sub-section 4.4.7 of DCD Revision 16 to be consistent with Technical Report (TR18) APP-GW-GLR-059 and (TR130) APP-GW-GLR-130.

Reference Information:

APP-GW-GLR-059 (TR18), Rev 0;
APP-GW-GLR-130 (TR130), Rev 0

Attachment A

AP1000 DCD Impact Report

APP-GW-GL-700, Revision 16, "AP1000 Design Control Document"

DCD Section	*Westinghouse Status*	*Tracking Number*	*DCD Category*	*Change Criteria*
Table 4.4-1	**Accepted for Revision 17**	**NRC166**	**Tier 2**	**NRC Prior Approval Not Required**

Description:

NRC166 contains the addition of note m to Table 4.4-1 sheet 2 to be consistent with RAI-TR18-SRSB-10

Reference Information:

RAI-TR18-SRSB-10

Chapter 5

Attachment A

AP1000 DCD Impact Report

APP-GW-GL-700, Revision 16, "AP1000 Design Control Document"

DCD Section	*Westinghouse Status*	*Tracking Number*	*DCD Category*	*Change Criteria*
1.2-1, 5.1-2	**Accepted for Revision 17**	**NRC106 (Chapt 5)**	**Tier 2**	**NRC Prior Approval Not Required**

Description:

NRC106 contains corrections to Figure 1.2-1, 5.1-2 and Figure 1.2-9. The basis for the change is TR36 APP-GW-GLR-016.

Reference Information:

APP-GW-GLR-016 (TR36), Rev 0

DCD Section	*Westinghouse Status*	*Tracking Number*	*DCD Category*	*Change Criteria*
5	**Accepted for Revision 17**	**NRC115**	**Tier 2**	**NRC Prior Approval Not Required**

Description:

NRC115 contains editorial corrections to Sub-sections 5.2.1.3, 5.2.4.3 and Figure 5.3-6 of DCD Revision 16.

Reference Information:

Attachment A

AP1000 DCD Impact Report

APP-GW-GL-700, Revision 16, "AP1000 Design Control Document"

DCD Section	*Westinghouse Status*	*Tracking Number*	*DCD Category*	*Change Criteria*
1.9.5.1.15, 3.9.6, 3.9-16, 5.2.4, 6.6	**Accepted for Revision 17**	**NRC148 (Chapt 5)**	**Tier 2**	**NRC Prior Approval Not Required**

Description:

NRC 148 contains changes to Sections 1.9.5.1.15, 3.9.3.4.3, 3.9.3.4.4, 3.9.6, 3.9.6.2, 3.9.6.2.1, 3.9.6.2.2, 3.9.6.2.3, 3.9.6.3, 5.2.2.9, 5.2.4, 5.2.4.3, 5.2.4.5, 5.2.4.6, 5.4.9.4, 3.9.3, Table 3.9-16 and 6.6 of the DCD Revision 16 to be consistent with APP-GW-GLN-138

Reference Information:

APP-GW-GLN-138 (TR138), Rev 0

DCD Section	*Westinghouse Status*	*Tracking Number*	*DCD Category*	*Change Criteria*
5.2.2.9	**Accepted for Revision 17**	**NRC061**	**Tier 2**	**NRC Prior Approval Not Required**

Description:

NRC061 contains an editorial correction to Sub-section 5.2.2.9 of DCD Revision 16.

Reference Information:

APP-GW-GLN-138 (TR138), Rev 0

Attachment A

AP1000 DCD Impact Report

APP-GW-GL-700, Revision 16, "AP1000 Design Control Document"

DCD Section	Westinghouse Status	Tracking Number	DCD Category	Change Criteria
5.2.6.2	**Accepted for Revision 17**	**NRC089**	**Tier 2**	**NRC Prior Approval Not Required**

Description:

NRC089 contains corrections to Section 5.2.6.2 of DCD Revision 16.

Reference Information:

DCD Section	Westinghouse Status	Tracking Number	DCD Category	Change Criteria
5.2	**Accepted for Revision 17**	**NRC077**	**Tier 2**	**NRC Prior Approval Not Required**

Description:

NRC077 contains corrections to Table 5.2-1 of DCD Revision 16.

Reference Information:

APP-GW-GLN-009 (TR33), Rev 1

Attachment A

AP1000 DCD Impact Report

APP-GW-GL-700, Revision 16, "AP1000 Design Control Document"

DCD Section	*Westinghouse Status*	*Tracking Number*	*DCD Category*	*Change Criteria*
3.8.2.6, 5.2-3	**Accepted for Revision 17**	**NRC093 (Chapt 5)**	**Tier 2**	**NRC Prior Approval Not Required**

Description:

NRC093 contains corrections to Section 3.8.2.6 and Table 5.2-3 of DCD Revision 16 to be consistent with Technical Report TR113, APP-GW-GLN-113.

Reference Information:

APP-GW-GLN-113 (TR113), Rev 0

DCD Section	*Westinghouse Status*	*Tracking Number*	*DCD Category*	*Change Criteria*
5.3.4.7	**Accepted for Revision 17**	**NRC090**	**Tier 2**	**NRC Prior Approval Not Required**

Description:

NRC090 contains corrections to Sub-section 5.3.4.7 of DCD Revision 16.

Reference Information:

APP-GW-GLN-138 (TR138), Rev 0

AP1000 DCD Impact Report

APP-GW-GL-700, Revision 16, "AP1000 Design Control Document"

DCD Section	Westinghouse Status	Tracking Number	DCD Category	Change Criteria
5.3.6.5	**Accepted for Revision 17**	**NRC136**	**Tier 2**	**NRC Prior Approval Not Required**

Description:

NRC136 contains corrections to Section 5.3.6.5 of DCD Revision 16.

Reference Information:

APP-GW-GLR-060 (TR24), Rev 0

DCD Section	Westinghouse Status	Tracking Number	DCD Category	Change Criteria
5.4.2.2	**Accepted for Revision 17**	**NRC053**	**Tier 2**	**NRC Prior Approval Not Required**

Description:

NRC053 contains corrections to Sub-section 5.4.2.2 of DCD Revision 16.

Reference Information:

RAI-TR35-001 R1

Attachment A

AP1000 DCD Impact Report

APP-GW-GL-700, Revision 16, "AP1000 Design Control Document"

DCD Section	*Westinghouse Status*	*Tracking Number*	*DCD Category*	*Change Criteria*
5.4.9.4	**Accepted for Revision 17**	**NRC063**	**Tier 2**	**NRC Prior Approval Not Required**

Description:

NRC063 contains corrections to Sub-section 5.4.9.4 of DCD Revision 16.

Reference Information:

APP-GW-GLN-138 (TR138), Rev 0

Chapter 6

Attachment A

AP1000 DCD Impact Report

APP-GW-GL-700, Revision 16, "AP1000 Design Control Document"

DCD Section	*Westinghouse Status*	*Tracking Number*	*DCD Category*	*Change Criteria*
6.1.1.3	**Accepted for Revision 17**	**NRC174**	**Tier 2**	**NRC Prior Approval Not Required**

Description:

NRC174 contains corrections to Section 6.1.1.3 to be consistent with RAI-TR106-CIB1-01

Reference Information:

RAI-TR106-CIB1-01

DCD Section	*Westinghouse Status*	*Tracking Number*	*DCD Category*	*Change Criteria*
6.2.1.2.3.2	**Accepted for Revision 17**	**NRC088**	**Tier 2**	**NRC Prior Approval Not Required**

Description:

NRC088 contains corrections to Sub-section 6.2.1.2.3.2 of DCD Revision 16. The basis for the change to be consistent with APP-GW-GLR-016.

Reference Information:

APP-GW-GLR-016 (TR36), Rev 0

Attachment A

AP1000 DCD Impact Report

APP-GW-GL-700, Revision 16, "AP1000 Design Control Document"

DCD Section	*Westinghouse Status*	*Tracking Number*	*DCD Category*	*Change Criteria*
1.9.5.1.15, 3.9.6, 3.9-16, 5.2.4, 6.6	**Accepted for Revision 17**	**NRC148 (Chapt 6)**	**Tier 2**	**NRC Prior Approval Not Required**

Description:

NRC 148 contains changes to Sections 1.9.5.1.15, 3.9.3.4.3, 3.9.3.4.4, 3.9.6, 3.9.6.2, 3.9.6.2.1, 3.9.6.2.2, 3.9.6.2.3, 3.9.6.3, Table 3.9-16 and 6.6 of the DCD Revision 16 to be consistent with APP-GW-GLN-138

Reference Information:

APP-GW-GLN-138 (TR138), Rev 0

DCD Section	*Westinghouse Status*	*Tracking Number*	*DCD Category*	*Change Criteria*
Table 6.2.3-1	**Accepted for Revision 17**	**NRC087**	**Tier 2**	**NRC Prior Approval Not Required**

Description:

NRC087 contains corrections to Table 6.2.3-1 to clarify the isolation signal to signal valve CCS-PL-208 (changed from "SS" to "S") No change required to section 6.2.3.2.2.

Reference Information:

Attachment A

AP1000 DCD Impact Report

APP-GW-GL-700, Revision 16, "AP1000 Design Control Document"

DCD Section	*Westinghouse Status*	*Tracking Number*	*DCD Category*	*Change Criteria*
6.2.3-1	**Accepted for Revision 17**	**NRC150**	**Tier 2**	**NRC Prior Approval Not Required**

Description:

NRC150 contains corrections to Sub-section 6.2.3 (Table 6.2.3-1) of DCD Revision 16. Corrected valve tags for CAS and CCS in Table 6.2.3-1.

Reference Information:

DCD Section	*Westinghouse Status*	*Tracking Number*	*DCD Category*	*Change Criteria*
6.3.8.2	**Accepted for Revision 17**	**NRC137**	**Tier 2**	**NRC Prior Approval Not Required**

Description:

NRC137 contains corrections to Sub-section 6.3.8.2 of DCD Revision 16 to be consistent with APP-GW-GLR-079.

Reference Information:

APP-GW-GLR-079 (TR26), Rev 1

AP1000 DCD Impact Report

APP-GW-GL-700, Revision 16, "AP1000 Design Control Document"

DCD Section	Westinghouse Status	Tracking Number	DCD Category	Change Criteria
6.4.2.3	**Accepted for Revision 17**	**NRC068**	**Tier 2**	**NRC Prior Approval Not Required**

Description:

NRC068 contains corrections to Sub-section 6.4.2.3 of DCD Revision 16.

Reference Information:

DCD Section	Westinghouse Status	Tracking Number	DCD Category	Change Criteria
6.6.6	**Accepted for Revision 17**	**NRC092**	**Tier 2**	**NRC Prior Approval Not Required**

Description:

NRC092 contains corrections to Sub-section 6.6.6 of DCD Revision 16. Added reference to IWE-3000 and IWF-3000. Clarified wording.

Reference Information:

Chapter 7

Attachment A

AP1000 DCD Impact Report

APP-GW-GL-700, Revision 16, "AP1000 Design Control Document"

DCD Section	*Westinghouse Status*	*Tracking Number*	*DCD Category*	*Change Criteria*
7.1, 7.2, 7.3	**Accepted for Revision 17**	**NRC114**	**Tier 2**	**NRC Prior Approval Not Required**

Description:

NRC 114 contains changes to Sections 7.1.1, 7.1.2, 7.1.3, 7.1.7, 7.2.1, and 7.3.1 of the DCD Revision 16 to be consistent with APP-GW-GLR-080, Rev 0.

Reference Information:

APP-GW-GLR-080 (TR80), Rev 0

DCD Section	*Westinghouse Status*	*Tracking Number*	*DCD Category*	*Change Criteria*
7.3, 7.5	**Accepted for Revision 17**	**NRC112**	**Tier 2**	**NRC Prior Approval Not Required**

Description:

NRC 112 contains changes to Sections 7.1.3 and 7.3.1.2.17, Table 7.3-1 (sheet 6 and 8), Table 7.5-1 (sheet 2 of 12) and Table 7.5-7 (sheet 4 of 4) of DCD Revision 16 to be consistent with APP-GW-GLR-080, Rev 0.

Reference Information:

APP-GW-GLR-080 (TR80), Rev 0

AP1000 DCD Impact Report

APP-GW-GL-700, Revision 16, "AP1000 Design Control Document"

DCD Section	Westinghouse Status	Tracking Number	DCD Category	Change Criteria
7.2, 7.3	**Accepted for Revision 17**	**NRC111**	**Tier 2**	**NRC Prior Approval Not Required**

Description:

NRC 111 contains corrections to Sections 7.2.1.1.1, 7.2.1.1.3, and Table 7.3-1 (sheet 8 of 9), Table 7.3-2 (sheets 1 & 3 of 4), Table 7.3-4 (sheet 2 of 2) to be consistent with APP-GW-GLR-080, Rev.0.

Reference Information:

APP-GW-GLR-080 (TR80), Rev 0

DCD Section	Westinghouse Status	Tracking Number	DCD Category	Change Criteria
7.2-1	**Accepted for Revision 17**	**NRC138**	**Tier 2**	**NRC Prior Approval Not Required**

Description:

NRC 138 has changes to the notes of Figure 7.2-1 (sheet 20 of 20) to be consistent with RAI-TR97-ICE-03.

Reference Information:

RAI-TR97-ICE-03

AP1000 DCD Impact Report

APP-GW-GL-700, Revision 16, "AP1000 Design Control Document"

DCD Section	Westinghouse Status	Tracking Number	DCD Category	Change Criteria
Table 7.3-2	**Accepted for Revision 17**	**NRC081**	**Tier 2**	**NRC Prior Approval Not Required**

Description:

NRC 081 contains changes to Table 7.3-2 (Sheet 3) of the DCD Revision 16 where P-12 Functions (d) and (e) were changed to be consistent with APP-GW-GLR-080, Rev 0.

Reference Information:

APP-GW-GLR-080 (TR80), Rev 0

DCD Section	Westinghouse Status	Tracking Number	DCD Category	Change Criteria
Table 7.5-1, Table 7.5-7	**Accepted for Revision 17**	**NRC145**	**Tier 2**	**NRC Prior Approval Not Required**

Description:

NRC 145 contains changes to Table 7.5-1 (sheet 2) of the DCD revision 16 to be consistent with the corrected pressure range on steam line pressure from Table 7.3-4. Changes made to Table 7.5-1 Sheet 7 for the CMT Water Level Sensor ranges and MCR Pressure Relief Valve Status on Table 7.5-1 sheet 10. These changes are consistent with APP-GW-GLN-123 (TR123) and APP-GW-GLR-080 (TR080), Rev 0. Also Table 7.5-7(sheet 4 of 4) has MCR pressure relief isolation valve status added to be consistent with APP-GW-GLR-080, Rev 0.

Reference Information:

APP-GW-GLN-123 (TR123), Rev 0;
APP-GW-GLR-080 (TR80), Rev 0

AP1000 DCD Impact Report

APP-GW-GL-700, Revision 16, "AP1000 Design Control Document"

DCD Section	Westinghouse Status	Tracking Number	DCD Category	Change Criteria
Table 7.5-1	**Accepted for Revision 17**	**NRC084**	**Tier 2**	**NRC Prior Approval Not Required**

Description:

NRC 084 adds the line item RCS sampling line isolation valve status to Table 7.5-1 (sheet 9 of 12) of the DCD Revision 16 to be consistent with APP-GW-GLR-080, Rev 0

Reference Information:

APP-GW-GLR-080 (TR80), Rev 0

DCD Section	Westinghouse Status	Tracking Number	DCD Category	Change Criteria
Table 7.5-1, Table 7.5-8, 9.4.1.1.2, 9A	**Accepted for Revision 17**	**NRC052 (Chapt 7)**	**Tier 2**	**NRC Prior Approval Not Required**

Description:

NRC 052 has changes to Table 7.5-1 (sheet 12 of 12) and Table 7.5-8 of the DCD Revision 16 that changes technical support center to control support area to be consistent with RAI-TR107-NSIR-06.

Reference Information:

APP-GW-GLR-107 (TR107), Rev 1 **RAI-TR107-NSIR-06**

Attachment A

AP1000 DCD Impact Report

APP-GW-GL-700, Revision 16, "AP1000 Design Control Document"

DCD Section	Westinghouse Status	Tracking Number	DCD Category	Change Criteria
3.5-5, 3.5-7, 7.5-1, 9.4, 9A, 11.5, 13.3, 14.2	**Accepted for Revision 17**	**NRC123 (Chapt 7)**	**Tier 2**	**NRC Prior Approval Not Required**

Description:

NRC123 contains corrections to change "technical support center" to "control support area" to be consistent with TR107, APP-GW-GLR-107.

Reference Information:

APP-GW-GLR-107 (TR107), Rev 1 **RAI-TR107-NSIR-02, RAI-TR107-NSIR-06**

DCD Section	Westinghouse Status	Tracking Number	DCD Category	Change Criteria
7	**Accepted for Revision 17**	**NRC050 (Chapt 7)**	**Tier 2**	**NRC Prior Approval Not Required**

Description:

NRC050 contains corrections to change DCD text from "technical support center" to "control support area" in the DCD. The basis for the change is TR 107, APP-GW-GLR-107.

Reference Information:

APP-GW-GLR-107 (TR107), Rev 1 **RAI-TR107-NSIR-01, RAI-TR107-NSIR-06**

Chapter 8

Attachment A

AP1000 DCD Impact Report

APP-GW-GL-700, Revision 16, "AP1000 Design Control Document"

DCD Section	*Westinghouse Status*	*Tracking Number*	*DCD Category*	*Change Criteria*
8.1	**Accepted for Revision 17**	**NRC076**	**Tier 2**	**NRC Prior Approval Not Required**

Description:

NRC076 contains editorial corrections to facilitate site specific utility connections to be described in the FSAR by using standard wording. This change makes it such that DCD changes will not be required once FSAR information is provided.

Reference Information:

Chapter 9

Attachment A

AP1000 DCD Impact Report

APP-GW-GL-700, Revision 16, "AP1000 Design Control Document"

DCD Section	*Westinghouse Status*	*Tracking Number*	*DCD Category*	*Change Criteria*
13.6-1, 9.1.1.2	**Accepted for Revision 17**	**NRC128 (Chapt 9)**	**Tier 2**	**NRC Prior Approval Not Required**

Description:

NRC128 - Based on discussions with the NRC, the decision has been made to remove the closure of 13.6-1 to provide a plant specific physical security plan. The security plan is being provided as part of the COL applications. This editorial change is made to the DCD to enable the plant specific physical security plan to be addressed in the COLA. Section 9.1.1.2 reference changed for consistency.

Reference Information:

APP-GW-GLR-066 (TR94), Rev 1 **RAI-TR94-NSIR-01**

DCD Section	*Westinghouse Status*	*Tracking Number*	*DCD Category*	*Change Criteria*
9.1	**Accepted for Revision 17**	**NRC104 (Chapt 9)**	**Tier 2**	**NRC Prior Approval Not Required**

Description:

NRC104 contains changes to Section 9.1.1.3, 9.1.6.2 and 9.1.7 of the DCD Revision 16 to be consistent with APP-GW-GLR-030, Rev 0.

Reference Information:

APP-GW-GLR-030 (TR67), Rev 0

Attachment A

AP1000 DCD Impact Report

APP-GW-GL-700, Revision 16, "AP1000 Design Control Document"

DCD Section	*Westinghouse Status*	*Tracking Number*	*DCD Category*	*Change Criteria*
Table 9.1-4	**Accepted for Revision 17**	**NRC161**	**Tier 2**	**NRC Prior Approval Not Required**

Description:

NRC161 contains changes to Table 9.1-4 of the DCD Revision 16 to be consistent with APP-GW-GLR-019, Rev 2.

Reference Information:

APP-GW-GLN-019 (TR103), Rev 2

DCD Section	*Westinghouse Status*	*Tracking Number*	*DCD Category*	*Change Criteria*
9.3.6	**Accepted for Revision 17**	**NRC157**	**Tier 2**	**NRC Prior Approval Not Required**

Description:

NRC157 contains changes to Section 9.3.6.3.7, 9.3.6.4.5.1, 9.3.6.6.1.2, 9.3.6.7 anf Figure 9.3.6-1(Sheets 1 & 2) of the DCD Revision 16 to be consistent with APP-GW-GLR-080,Rev 0.

Reference Information:

APP-GW-GLR-080 (TR80), Rev 0

AP1000 DCD Impact Report

APP-GW-GL-700, Revision 16, "AP1000 Design Control Document"

DCD Section	Westinghouse Status	Tracking Number	DCD Category	Change Criteria
9	**Accepted for Revision 17**	**NRC050 (Chapt 9)**	**Tier 2**	**NRC Prior Approval Not Required**

Description:

NRC050 contains corrections to change DCD text from "technical support center" to "control support area" in the DCD. The basis for the change is TR 107, APP-GW-GLR-107.

Reference Information:

APP-GW-GLR-107 (TR107), Rev 1 **RAI-TR107-NSIR-01**

DCD Section	Westinghouse Status	Tracking Number	DCD Category	Change Criteria
9.4.1	**Accepted for Revision 17**	**NRC067**	**Tier 2**	**NRC Prior Approval Not Required**

Description:

NRC 067 contains changes to Section 9.4.1.1.1, 9.4.1.1.2, 9.4.1.2.1.2, 9.4.1.2.3.1, 9.4.1.4, 9.4.1.5, 9.4.12 and 9A.3.4.16 of the DCD Revision 16 to be consistent with RAI-TR107-NSIR-01.

Reference Information:

RAI-TR107-NSIR-01

Attachment A

AP1000 DCD Impact Report

APP-GW-GL-700, Revision 16, "AP1000 Design Control Document"

DCD Section	Westinghouse Status	Tracking Number	DCD Category	Change Criteria
3.5-5, 3.5-7, 7.5-1, 9.4, 9A, 11.5, 13.3, 14.2	**Accepted for Revision 17**	**NRC123 (Chapt 9)**	**Tier 2**	**update later**

Description:

NRC123 contains corrections to change "technical support center" to "control support area" to be consistent with TR107, APP-GW-GLR-107.

Reference Information:

APP-GW-GLR-107 (TR107), Rev 1 **RAI-TR107-NSIR-02**

DCD Section	Westinghouse Status	Tracking Number	DCD Category	Change Criteria
Table 7.5-1, 9.4.1.1.2, 9A	**Accepted for Revision 17**	**NRC052 (Chapt 9)**	**Tier 2**	**NRC Prior Approval Not Required**

Description:

NRC 052 contains changes to Section 9.4.1.2.1.2, 9.4.1.4, 9.4.12 and 9A.3.4.16 of the DCD Revision 16 to be consistent with RAI-TR107-NSIR-06.

Reference Information:

RAI-TR107-NSIR-06

AP1000 DCD Impact Report

APP-GW-GL-700, Revision 16, "AP1000 Design Control Document"

DCD Section	Westinghouse Status	Tracking Number	DCD Category	Change Criteria
9.5.2.5.3	**Accepted for Revision 17**	**NRC054**	**Tier 2**	**NRC Prior Approval Not Required**

Description:

NRC054 contains changes to Section 9.5.2.5.3 and 9.5.3 of the DCD Revision 16 to be consistent with RAI-TR107-NSIR-01.

Reference Information:

RAI-TR107-NSIR-01

DCD Section	Westinghouse Status	Tracking Number	DCD Category	Change Criteria
9.5.4-1	**Accepted for Revision 17**	**NRC072**	**Tier 2**	**NRC Prior Approval Not Required**

Description:

NRC 072 contains changes to Figures 9.5.4-1 (Sheets1,2,and3)of the DCD Revision 16 to delete Auxiliary Boiler out of the title.

Reference Information:

Chapter 10

Attachment A

AP1000 DCD Impact Report

APP-GW-GL-700, Revision 16, "AP1000 Design Control Document"

DCD Section	*Westinghouse Status*	*Tracking Number*	*DCD Category*	*Change Criteria*
10.2.1.2	**Accepted for Revision 17**	**NRC071**	**Tier 2**	**NRC Prior Approval Not Required**

Description:

NRC071 identifies an editorial correction (typo) in Section 10.2.1.2 of the DCD Revision 16. "The system provides extraction steam for six stages of regenerative feedwater heating." This should be seven stages of regenerative feedwater heating. The change was captured in APP-GW-GLN-018 (TR86), Rev 1

Reference Information:

APP-GW-GLN-018 (TR86), Rev 1

DCD Section	*Westinghouse Status*	*Tracking Number*	*DCD Category*	*Change Criteria*
10.4.7.2.2	**Accepted for Revision 17**	**NRC070**	**Tier 2**	**NRC Prior Approval Not Required**

Description:

NRC070 identifies an editorial correction (typo) in the Subsection 10.4.7.2.2 title of the DCD Revision 16. "High-Pressure Feedwater Heater" should be "High-Pressure Feedwater Heaters"

Reference Information:

APP-GW-GLN-018 (TR86), Rev 1

Attachment A

AP1000 DCD Impact Report

APP-GW-GL-700, Revision 16, "AP1000 Design Control Document"

DCD Section	*Westinghouse Status*	*Tracking Number*	*DCD Category*	*Change Criteria*
10.4.7.2.3.1.3	**Accepted for Revision 17**	**NRC066**	**Tier 2**	**NRC Prior Approval Not Required**

Description:

NRC066 identifies an editorial correction (typo) in Tier 2, Section 10.4.7.2.3.1.3 of the DCD Revision 16, "Feedwater is recirculated from downstream of the No. 6 feedwater heaters to the main condenser for cleanup and deaeration of the condensate and feedwater inventory." The reference should be to the No. 7 feedwater heaters. The change was captured in APP-GW-GLN-018 (TR86), Rev 1

Reference Information:

APP-GW-GLN-018 (TR86), Rev 1

Chapter 11

Attachment A

AP1000 DCD Impact Report

APP-GW-GL-700, Revision 16, "AP1000 Design Control Document"

DCD Section	*Westinghouse Status*	*Tracking Number*	*DCD Category*	*Change Criteria*
11.4.2.1	**Accepted for Revision 17**	**NRC122**	**Tier 2**	**NRC Prior Approval Not Required**

Description:

NRC122 contains an editorial correction to DCD Subsection 11.4.2.1, Rev. 16. In the 12th paragraph, the first sentence starting with, "A conservative estimate …", the last word in the sentence was changed from 'cycles' to 'system' for clarity.

Reference Information:

DCD Section	*Westinghouse Status*	*Tracking Number*	*DCD Category*	*Change Criteria*
11.4.2.4.2	**Accepted for Revision 17**	**NRC116**	**Tier 2**	**NRC Prior Approval Not Required**

Description:

NRC116 contains an editorial change; the inclusion of a numeric value could lead to confusion. The ability to ship wastes off-site will be appropriately regulated under existing regulations (eg: 10 CFR 61, 10 CFR 20.2002)

Reference Information:

AP1000 DCD Impact Report

APP-GW-GL-700, Revision 16, "AP1000 Design Control Document"

DCD Section	Westinghouse Status	Tracking Number	DCD Category	Change Criteria
11.5.5	**Accepted for Revision 17**	**NRC080**	**Tier 2**	**NRC Prior Approval Not Required**

Description:

NRC080 contains an editorial correction to Section 11.5.5 of the DCD "For further Regulatory Guide 1.97 information refer to Appendix 7A and Section 7.5." The reference should be to Appendix 1A not 7A.

Reference Information:

RAI-TR107-NSIR-01

DCD Section	Westinghouse Status	Tracking Number	DCD Category	Change Criteria
11.5.6	**Accepted for Revision 17**	**NRC050 (Chapt 11)**	**Tier 2**	**NRC Prior Approval Not Required**

Description:

NRC050 contains corrections to change DCD text from "technical support center" to "control support area" in the DCD. The basis for the change is TR 107, APP-GW-GLR-107.

Reference Information:

APP-GW-GLR-107 (TR107), Rev 1 **RAI-TR107-NSIR-01**

Attachment A

AP1000 DCD Impact Report

APP-GW-GL-700, Revision 16, "AP1000 Design Control Document"

DCD Section	*Westinghouse Status*	*Tracking Number*	*DCD Category*	*Change Criteria*
3.5-5, 3.5-7, 7.5-1, 9.4, 9A, 11.5, 13.3, 14.2	**Accepted for Revision 17**	**NRC123 (Chapt11)**	**Tier 2**	**NRC Prior Approval Not Required**

Description:

NRC123 contains corrections to change "technical support center" to "control support area" to be consistent with TR107, APP-GW-GLR-107.

Reference Information:

APP-GW-GLR-107 (TR107), Rev 1 **RAI-TR107-NSIR-02**

Chapter 12

Attachment A

AP1000 DCD Impact Report

APP-GW-GL-700, Revision 16, "AP1000 Design Control Document"

DCD Section	*Westinghouse Status*	*Tracking Number*	*DCD Category*	*Change Criteria*
12.2.1.2.4, Table 12.2-15, Table 12.2-18	**Accepted for Revision 17**	**NRC086**	**Tier 2**	**NRC Prior Approval Not Required**

Description:

The following changes are made to Chapter 12 to be consistent with changes made in Chapter 4 to the Ag-In-Cd rodlets. The basis for the change is APP-GW-GLR-059 (TR18) :

DCD Section 12.2.1.2.4 - change the second sentence of the second paragraph to read "The gray rods contain either type 304 stainless steel or Ag-In-Cd pellets in a stainless steel sleeve." i.e. add "in a stainless steel sleeve" to the sentence.

DCD Table 12.2-15 - The note at the bottom of the table should be changed to read "The absorber cross-sectional area is 0.130 square centimeters per rod and …"; i.e. the area is reduced from 0.589 to 0.130 sq. cm.

DCD Table 12.2-18 - The title of the table should be changed to read "IRRADIATED STAINLESS STEEL SOURCE STRENGTHS (0.12 WEIGHT PERCENT COBALT)" ; i.e. delete "TYPE 304" from the title. In addition, the last item in the note at the bottom of the table should be changed to read " - Gray rod sleeve - 0.606 cm2" - ; i.e. change "pellet - 0.589" to "sleeve - 0.606":

Reference Information:

APP-GW-GLR-059 (TR18), Rev 0

Chapter 13

Attachment A

AP1000 DCD Impact Report

APP-GW-GL-700, Revision 16, "AP1000 Design Control Document"

DCD Section	*Westinghouse Status*	*Tracking Number*	*DCD Category*	*Change Criteria*
13.6, 13.6.1	**Accepted for Revision 17**	**NRC128 (Chapt 13)**	**Tier 2**	**NRC Prior Approval Not Required**

Description:

NRC128 - Based on discussions with the NRC, the decision has been made to remove the closure of 13.6 and 13.6.1 to provide a plant specific physical security plan. The security plan is being provided as part of the R-COL. This editorial change is made to the DCD to enable the plant specific physical security plan to be addressed in the COLA.

Reference Information:

APP-GW-GLR-066 (TR94), Rev 1 **RAI-TR94-NSIR-01**

Chapter 14

Attachment A

AP1000 DCD Impact Report

APP-GW-GL-700, Revision 16, "AP1000 Design Control Document"

DCD Section	Westinghouse Status	Tracking Number	DCD Category	Change Criteria
3.5-5, 3.5-7, 7.5-1, 9.4, 9A, 11.5, 13.3, 14.2	**Accepted for Revision 17**	**NRC123 (Chapt 14)**	**Tier 2**	**NRC Prior Approval Not Required**

Description:

NRC123 contains corrections to change "technical support center" to "control support area" to be consistent with TR107, APP-GW-GLR-107 and RAI-TR107-NSIR-01.

Reference Information:

APP-GW-GLR-107 (TR107), Rev 1 **RAI-TR107-NSIR-01**

DCD Section	Westinghouse Status	Tracking Number	DCD Category	Change Criteria
14.2	**Accepted for Revision 17**	**NRC050 (Chapt 14)**	**Tier 2**	**NRC Prior Approval Not Required**

Description:

NRC050 contains corrections to change DCD text from "technical support center" to "control support area" in the DCD. The basis for the change is TR 107, APP-GW-GLR-107.

Reference Information:

APP-GW-GLR-107 (TR107), Rev 1 **RAI-TR107-NSIR-01**

Attachment A

AP1000 DCD Impact Report

APP-GW-GL-700, Revision 16, "AP1000 Design Control Document"

DCD Section	Westinghouse Status	Tracking Number	DCD Category	Change Criteria
14.3-2	**Accepted for Revision 17**	**NRC158**	**Tier 2**	**NRC Prior Approval Not Required**

Description:

NRC158 contains corrections to Table 14.3-2 to be consistent with APP-GW-GLR-080 (TR80)

Reference Information:

APP-GW-GLR-080 (TR80), Rev 0

DCD Section	Westinghouse Status	Tracking Number	DCD Category	Change Criteria
14.3-3	**Accepted for Revision 17**	**NRC096**	**Tier 2**	**NRC Prior Approval Not Required**

Description:

NRC096 contains editorial corrections to Tables 14.3-3 and Table 14.3-6 to be consistent with APP-GW-GLN-022 (TR97)

Reference Information:

APP-GW-GLN-022 (TR97), Rev 1

Attachment A

AP1000 DCD Impact Report

APP-GW-GL-700, Revision 16, "AP1000 Design Control Document"

DCD Section	Westinghouse Status	Tracking Number	DCD Category	Change Criteria
14.3	**Accepted for Revision 17**	**NRC098**	**Tier 2**	**NRC Prior Approval Not Required**

Description:

NRC098 contains editorial corrections to Table 14.3-7 to be consistent with APP-GW-GLN-122 (TR122)

Reference Information:

APP-GW-GLN-122 (TR122), Rev 0

DCD Section	Westinghouse Status	Tracking Number	DCD Category	Change Criteria
14.4.3	**Accepted for Revision 17**	**NRC029**	**Tier 2**	**NRC Prior Approval Not Required**

Description:

NRC029 contains editorial corrections to Section 14.4.3 to be consistent with APP-GW-GLR-038 (TR71B)

Reference Information:

APP-GW-GLR-038 (TR71B), Rev 1 **RAI-TR71B-001**

Chapter 15

Attachment A

AP1000 DCD Impact Report

APP-GW-GL-700, Revision 16, "AP1000 Design Control Document"

DCD Section	*Westinghouse Status*	*Tracking Number*	*DCD Category*	*Change Criteria*
15.0-4A, 15.0-6	**Accepted for Revision 17**	**NRC155**	**Tier 2**	**NRC Prior Approval Not Required**

Description:

NRC155 contains editorial changes to delete High neutron flux from Table 15.0-4a and to change P-8 interlock to P-10 interlock in Table 15.0-6. The basis for the change is APP-GW-GLR-080.

Reference Information:

APP-GW-GLR-080 (TR80), Rev 0

DCD Section	*Westinghouse Status*	*Tracking Number*	*DCD Category*	*Change Criteria*
15A	**Accepted for Revision 17**	**NRC142**	**Tier 2**	**NRC Prior Approval Not Required**

Description:

NRC142 contains corrections to be consistent with the changes made in Table 5.0-1, Table 2-1, and Table 14.3-7. Changes to 15A.3.3 are editorial and consistent with APP-GW-GLN-122. The basis for the changes is APP-GW-GLN-122.

Reference Information:

APP-GW-GLN-122 (TR122), Rev 0

Chapter 16

Attachment A

AP1000 DCD Impact Report

APP-GW-GL-700, Revision 16, "AP1000 Design Control Document"

DCD Section	*Westinghouse Status*	*Tracking Number*	*DCD Category*	*Change Criteria*
16: TS Table 3.3.1-1	**Accepted for Revision 17**	**NRC085**	**Tier 2**	**NRC Prior Approval Required**

Description:

NRC085 contains an editorial correction (typo) to remove the end bracket for the Reviewer's Note in Table 3.3.1-1 on page 3.3.1-11

Reference Information:

APP-GW-GLN-075 (TR74C), Rev 1

DCD Section	*Westinghouse Status*	*Tracking Number*	*DCD Category*	*Change Criteria*
16: TS 3.3.1	**Accepted for Revision 17**	**NRC173**	**Tier 2**	**NRC Prior Approval Required**

Description:

NRC173 contains pagination pointer corrections to Table 3.3.1-1 page 2 Function 6 & 7 to refer to Table 3.3.1-1 Page 5 of 5

Reference Information:

Attachment A

AP1000 DCD Impact Report

APP-GW-GL-700, Revision 16, "AP1000 Design Control Document"

DCD Section	*Westinghouse Status*	*Tracking Number*	*DCD Category*	*Change Criteria*
16: TS Table 3.3.2-1	**Accepted for Revision 17**	**NRC101**	**Tier 2**	**NRC Prior Approval Required**

Description:

NRC101 contains corrections to Table 3.3.2-1 page 10, and SR 3.8.1.2. The basis for the changes is APP-GW-GLR-064 (TR74A), Rev 0 and APP-GW-GLN-075 (TR74C), Rev 1

Reference Information:

APP-GW-GLR-064 (TR74A), Rev 0;
APP-GW-GLN-075 (TR74C), Rev 1

DCD Section	*Westinghouse Status*	*Tracking Number*	*DCD Category*	*Change Criteria*
16: TS 4.3.1, 4.3-1	**Accepted for Revision 17**	**NRC100**	**Tier 2**	**NRC Prior Approval Required**

Description:

NRC100 contains corrections (typos) to TS 4.3.1 and Figure 4.3-1 of DCD Revision 16. The word "an" in the following statement will be changed to the word "any" in DCD Revision 17. "New or partially spent fuel assemblies with an discharge burnup may be allowed unrestricted storage in Region 1 and defective Fuel Cells of Figure 4.3-1". Figure 4.3-1, the word "module" was misspelled.

Reference Information:

Attachment A

AP1000 DCD Impact Report

APP-GW-GL-700, Revision 16, "AP1000 Design Control Document"

DCD Section	*Westinghouse Status*	*Tracking Number*	*DCD Category*	*Change Criteria*
16: TS 5.3.1	**Accepted for Revision 17**	**NRC119**	**Tier 2**	**NRC Prior Approval Required**

Description:

NRC119 contains the addition of brackets to the entire second sentence of section 5.3.1 for clarity.

Reference Information:

DCD Section	*Westinghouse Status*	*Tracking Number*	*DCD Category*	*Change Criteria*
16: TS 5.5.1	**Accepted for Revision 17**	**NRC149**	**Tier 2**	**NRC Prior Approval Required**

Description:

NRC149 contains corrections to section 5.5.1 to change the reference from 10 CFR 20.106, which no longer exists, to 10 CFR 20.1302.

Reference Information:

Attachment A

AP1000 DCD Impact Report

APP-GW-GL-700, Revision 16, "AP1000 Design Control Document"

DCD Section	*Westinghouse Status*	*Tracking Number*	*DCD Category*	*Change Criteria*
16: TS 5.5.9	**Accepted for Revision 17**	**NRC162**	**Tier 2**	**NRC Prior Approval Required**

Description:

NRC162 contains an editorial correction (typo) to GTS 5.5.9 Table 3.9 dot 17 should be Table 3.9 dash 17

Reference Information:

DCD Section	*Westinghouse Status*	*Tracking Number*	*DCD Category*	*Change Criteria*
16: TS B.3.3.2	**Accepted for Revision 17**	**NRC156**	**Tier 2**	**NRC Prior Approval Required**

Description:

NRC156 contains corrections to B 2.2.1, B 3.3.2 Subsection 15, 15.a, 18.a, 18.f, and Action D.1 to be consistent with APP-GW-GLN-075 (TR74C), Rev 0

Reference Information:

APP-GW-GLN-075 (TR74C), Rev 0

Attachment A

AP1000 DCD Impact Report

APP-GW-GL-700, Revision 16, "AP1000 Design Control Document"

DCD Section	*Westinghouse Status*	*Tracking Number*	*DCD Category*	*Change Criteria*
16: TS B 3.4.8	**Accepted for Revision 17**	**NRC055**	**Tier 2**	**NRC Prior Approval Required**

Description:

NRC055 contains corrections to B 3.4.8 Surveillance Requirements based on (TR74C) APP-GW-GLN-075.

Reference Information:

APP-GW-GLN-075 (TR74C), Rev 1

Chapter 18

Attachment A

AP1000 DCD Impact Report

APP-GW-GL-700, Revision 16, "AP1000 Design Control Document"

DCD Section	*Westinghouse Status*	*Tracking Number*	*DCD Category*	*Change Criteria*
18.2.6.2	**Accepted for Revision 17**	**NRC152**	**Tier 2**	**NRC Prior Approval Not Required**

Description:

NRC152 contains changes to Section 18.2.6.2 in the DCD Revision 16 to be consistent with APP-GW-GLR-136. APP-GW-GLR-136 has been added as a reference in Section 18.2.7

Reference Information:

APP-GW-GLR-136 (TR136), Rev 0

DCD Section	*Westinghouse Status*	*Tracking Number*	*DCD Category*	*Change Criteria*
18.2	**Accepted for Revision 17**	**NRC065**	**Tier 2**	**NRC Prior Approval Not Required**

Description:

NRC065 contains an editorial correction to delete the parenthetical reference to Note 1, (1), in the box containing the words "Procedure Development" on DCD Figure 18.2-3

The basis for this deletion is Revision 1 of Technical Report 70, APP-GW-GLR-040, which closes COL Applicant actions with respect to Operating Procedure development. In addition, this deletion will ensure that Figure 18.2-3 of the DCD is consistent with Table 1.8-2 which clearly states that, with respect to COL Information Item 18.9-1, there are no COL Applicant or COL Holder actions required.

Reference Information:

APP-GW-GLR-040 (TR70), Rev 1

Chapter 19

Attachment A

AP1000 DCD Impact Report

APP-GW-GL-700, Revision 16, "AP1000 Design Control Document"

DCD Section	*Westinghouse Status*	*Tracking Number*	*DCD Category*	*Change Criteria*
19.58	**Accepted for Revision 17**	**NRC170**	**Tier 2**	**NRC Prior Approval Not Required**

Description:

NRC170 contains corrections to 19.58.2, 19.58.3, and 19.58.4 based on APP-GW-GLR-101 (TR101), Rev 1

Reference Information:

APP-GW-GLR-101 (TR101), Rev 1

DCD Section	*Westinghouse Status*	*Tracking Number*	*DCD Category*	*Change Criteria*
19.59-18	**Accepted for Revision 17**	**NRC159**	**Tier 2**	**NRC Prior Approval Not Required**

Description:

NRC159 contains corrections to Table 19.59-18 sheet 23 of DCD Revision 16 to be consistent with Technical Report TR80, APP-GW-GLR-080.

Reference Information:

APP-GW-GLR-080 (TR80), Rev 0

ATTACHMENT B

Tier 1

2.2.1 Containment System

Design Description

The containment system (CNS) is the collection of boundaries that separates the containment atmosphere from the outside environment during design basis accidents.

The CNS is as shown in Figure 2.2.1-1 and the component locations of the CNS are as shown in Table 2.2.1-4.

1. The functional arrangement of the CNS and associated systems is as described in the Design Description of this Section 2.2.1.

2. a) The components identified in Table 2.2.1-1 as ASME Code Section III are designed and constructed in accordance with ASME Code Section III requirements.

   b) The piping identified in Table 2.2.1-2 as ASME Code Section III is designed and constructed in accordance with ASME Code Section III requirements.

3. a) Pressure boundary welds in components identified in Table 2.2.1-1 as ASME Code Section III meet ASME Code Section III requirements.

   b) Pressure boundary welds in piping identified in Table 2.2.1-2 as ASME Code Section III meet ASME Code Section III requirements.

4. a) The components identified in Table 2.2.1-1 as ASME Code Section III retain their pressure boundary integrity at their design pressure.

   b) The piping identified in Table 2.2.1-2 as ASME Code Section III retains its pressure boundary integrity at its design pressure.

5. The seismic Category I equipment identified in Table 2.2.1-1 can withstand seismic design basis loads without loss of structural integrity and safety function.

6. a) The Class 1E equipment identified in Table 2.2.1-1 as being qualified for a harsh environment can withstand the environmental conditions that would exist before, during, and following a design basis accident without loss of safety function for the time required to perform the safety function.

   b) The Class 1E components identified in Table 2.2.1-1 are powered from their respective Class 1E division.

   c) Separation is provided between CNS Class 1E divisions, and between Class 1E divisions and non-Class 1E cable.

NRC 176

   d) <u>The non-Class 1E electrical penetrations identified in Table 2.2.1-1 as being qualified for a harsh environment can withstand the environmental conditions that would exist before, during and following a design basis accident without loss of containment pressure boundary integrity.</u>

Table 2.2.1-3 (cont.)
Inspections, Tests, Analyses, and Acceptance Criteria

Design Commitment	Inspections, Tests, Analyses	Acceptance Criteria
6.a) The Class 1E equipment identified in Table 2.2.1-1 as being qualified for a harsh environment can withstand the environmental conditions that would exist before, during, and following a design basis accident without loss of safety function for the time required to perform the safety function.	i) Type tests, analyses, or a combination of type tests and analyses will be performed on Class 1E equipment located in a harsh environment.	i) A report exists and concludes that the Class 1E equipment identified in Table 2.2.1-1 as being qualified for a harsh environment can withstand the environmental conditions that would exist before, during, and following a design basis accident without loss of safety function for the time required to perform the safety function.
	ii) Inspection will be performed of the as-installed Class 1E equipment and the associated wiring, cables, and terminations located in a harsh environment.	ii) A report exists and concludes that the as-installed Class 1E equipment and the associated wiring, cables, and terminations identified in Table 2.2.1-1 as being qualified for a harsh environment are bounded by type tests, analyses, or a combination of type tests and analyses.
6.b) The Class 1E components identified in Table 2.2.1-1 are powered from their respective Class 1E division.	Testing will be performed by providing a simulated test signal in each Class 1E division.	A simulated test signal exists at the Class 1E equipment identified in Table 2.2.1-1 when the assigned Class 1E division is provided the test signal.
6.c) Separation is provided between CNS Class 1E divisions, and between Class 1E divisions and non-Class 1E cable.	See Tier 1 Material, Table 3.3-6, item 7.d.	See Tier 1 Material, Table 3.3-6, item 7.d.
NRC 176 6.d) The non-Class 1E electrical penetrations identified in Table 2.2.1-1 as being qualified for a harsh environmental can withstand the environmental conditions that would exist before, during and following a design basis accident without loss of containment pressure boundary integrity.	i) Type tests, analyses, or a combination of type tests and analyses will be performed on non-Class 1E electrical penetrations located in a harsh environment.	i) A report exists and concludes that the non-Class 1E electrical penetrations identified in Table 2.2.1-1 as being qualified for a harsh environment can withstand the environmental conditions that would exist before, during, and following a design basis accident without loss of containment pressure boundary integrity.
	ii) Inspection will be performed of the as-installed non Class 1E electrical penetrations located in a harsh environment.	ii. A report exists and concludes that the as-installed non-Class 1E electrical penetrations identified in Table 2.2.1-1 as being qualified for a harsh environment are bounded by type tests, analyses, or a combination of type tests and analyses.

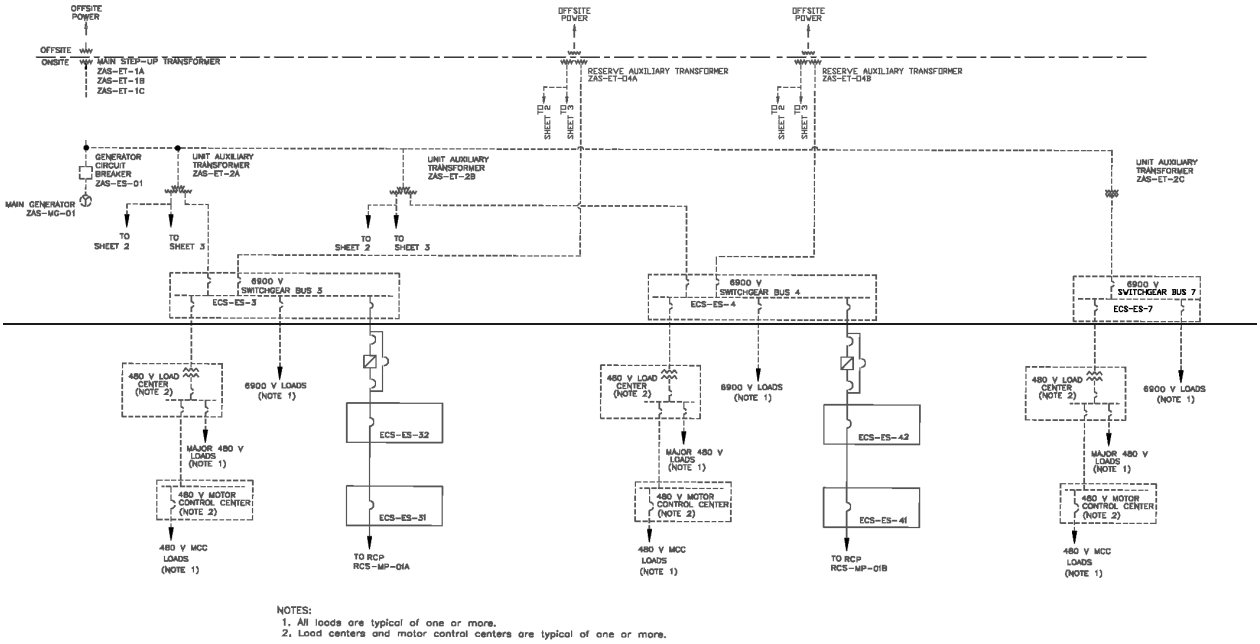

NOTES:
1. All loads are typical of one or more.
2. Load centers and motor control centers are typical of one or more.

NRC 078

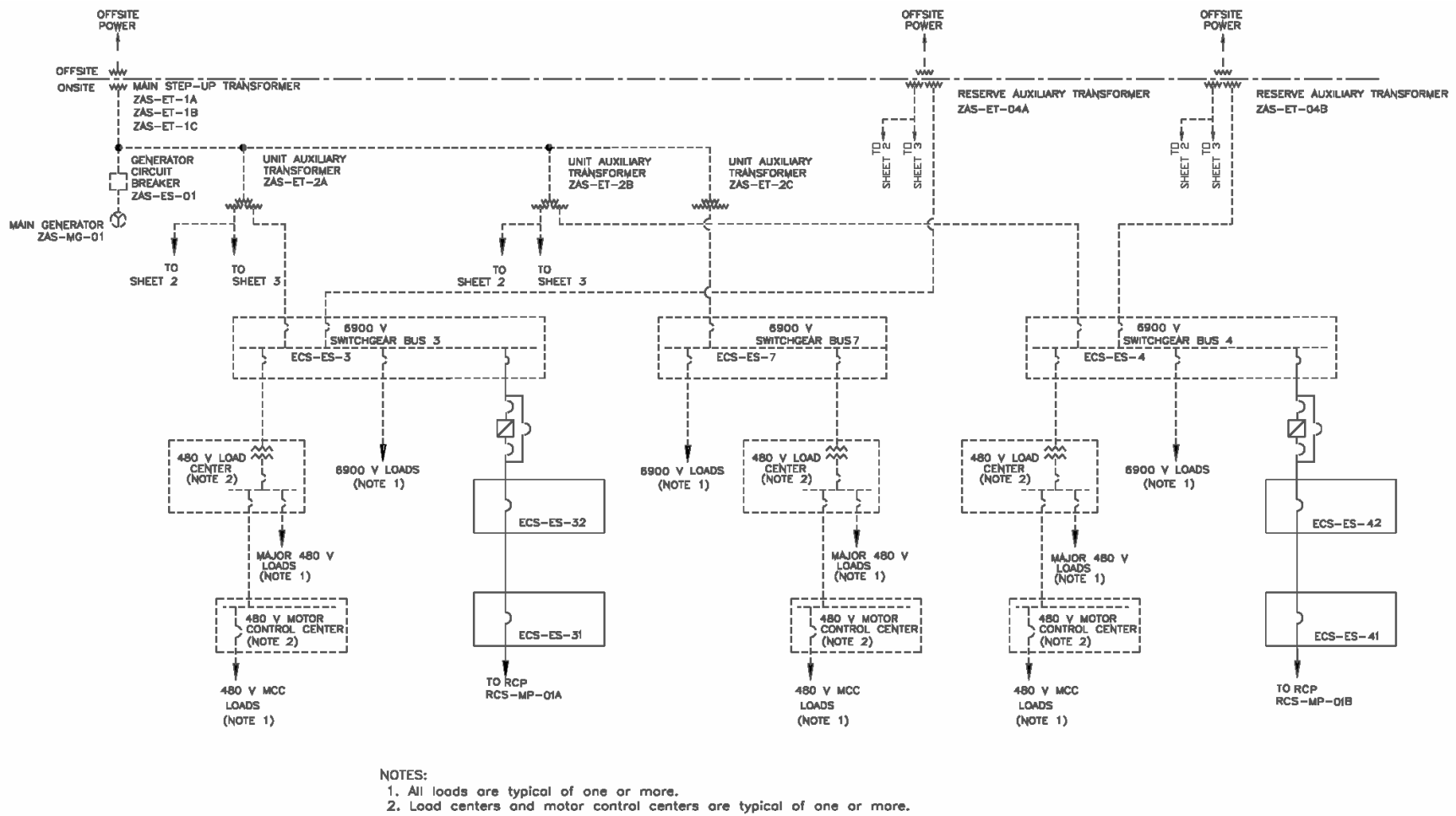

Figure 2.6.1-1 (Sheet 1 of 4)
Main ac Power System

Table 3.5-4
Airborne Radiation Monitors

Equipment List	Equipment No.
Fuel Handling Area Exhaust Radiation Monitor	VAS-RE-001
Auxiliary Building Exhaust Radiation Monitor	VAS-RE-002
Annex Building Exhaust Radiation Monitor	VAS-RE003
Health Physics and Hot Machine Shop Exhaust Radiation Monitor	VHS-RE001
Radwaste Building Exhaust Radiation Monitor	VRS-RE023

Table 3.5-5
Area Radiation Monitors

Primary Sampling Room Area Monitor	RMS-RE008
CSA~~Technical Support Center~~ Area Monitor	RMS-RE016
Main Control Room Area Monitor	RMS-RE010

NRC 051
NRC 123

Table 3.5-7 (cont.)

Component Name	Tag No.	Component Location
Wastewater Discharge Radiation Monitor	WWS-RE021	Yard/Turbine Building
Fuel Handling Area Exhaust Radiation Monitor	VAS-RE-001	Auxiliary Building
Auxiliary Building Exhaust Radiation Monitor	VAS-RE-002	Auxiliary Building
Annex Building Exhaust Radiation Monitor	VAS-RE003	Auxiliary Building
Health Physics and Hot Machine Shop Exhaust Radiation Monitor	VHS-RE001	Annex Building
Radwaste Building Exhaust Radiation Monitor	VRS-RE023	Radwaste Building
Primary Sampling Room Area Radiation Monitor	RMS-RE008	Auxiliary Building
CSA~~Technical Support Center~~ Area Radiation Monitor	RMS-RE016	Control Support Area~~Technical Support Center~~
Main Control Room Area Radiation Monitor	RMS-RE010	Auxiliary Building

NRC 051
NRC 123

Table 5.0-1 (cont.)
Site Parameters

Atmospheric Dispersion Factors (X/Q)	
Site Boundary (0-2 hr)	$\leq 1.0 \times 10^{-3}$ sec/m^3
Site Boundary (annual average)	$\leq 2.0 \times 10^{-5}$ sec/m^3
Low Population Zone Boundary	
0 - 8 hr	$\leq$ 5.0~~2.2~~ x 10^{-4} sec/m^3
8 - 24 hr	$\leq$ 3.0~~1.6~~ x 10^{-4} sec/m^3
24 - 96 hr	$\leq$ 1.5~~1.0~~ x 10^{-4} sec/m^3
96 - 720 hr	$\leq 8.0 \times 10^{-5}$ sec/m^3

NRC 144

ATTACHMENT B

Tier 2*

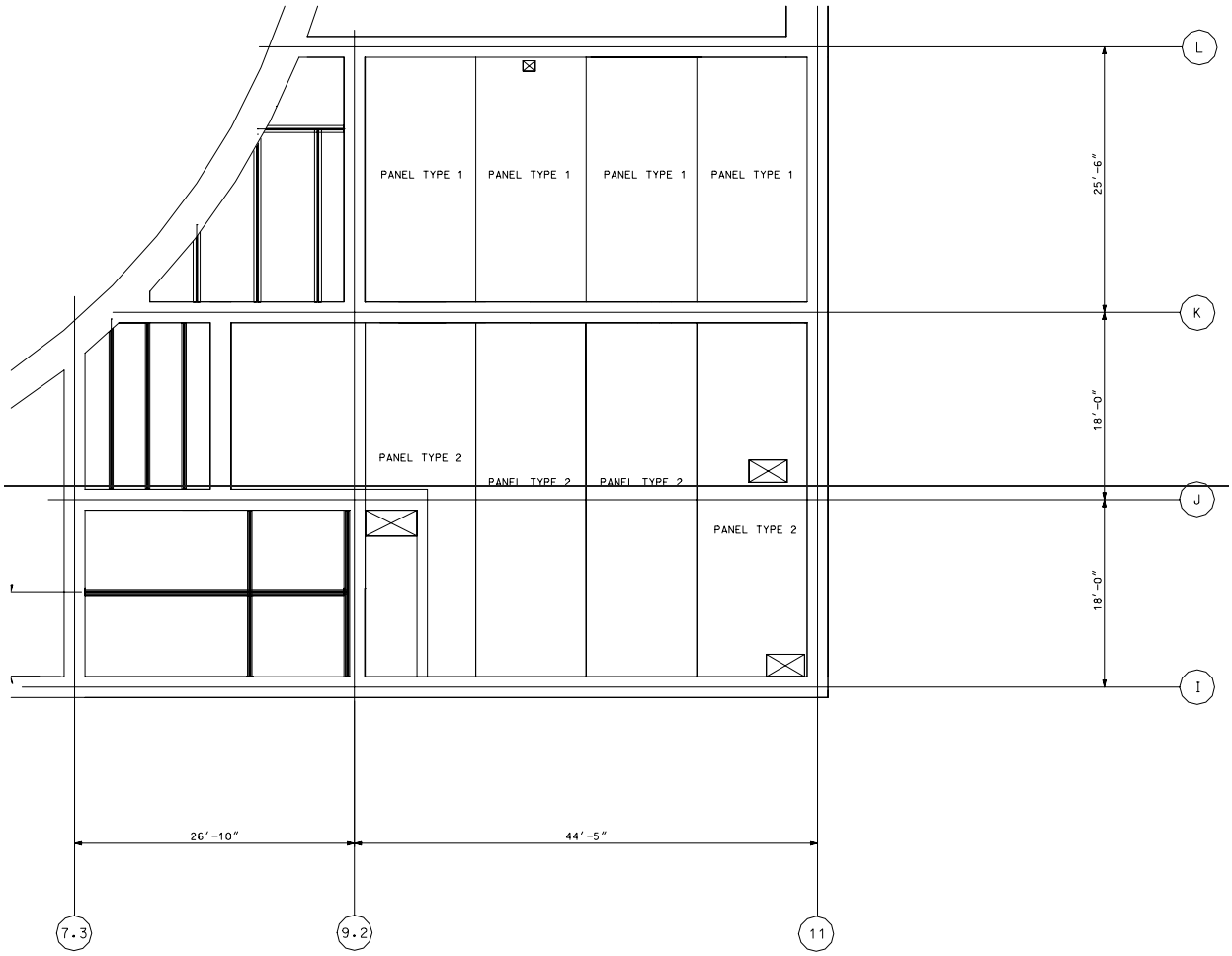

*NRC Staff approval is required prior to implementing a change in this information; see DCD Introduction Section 3.5.

NRC 094

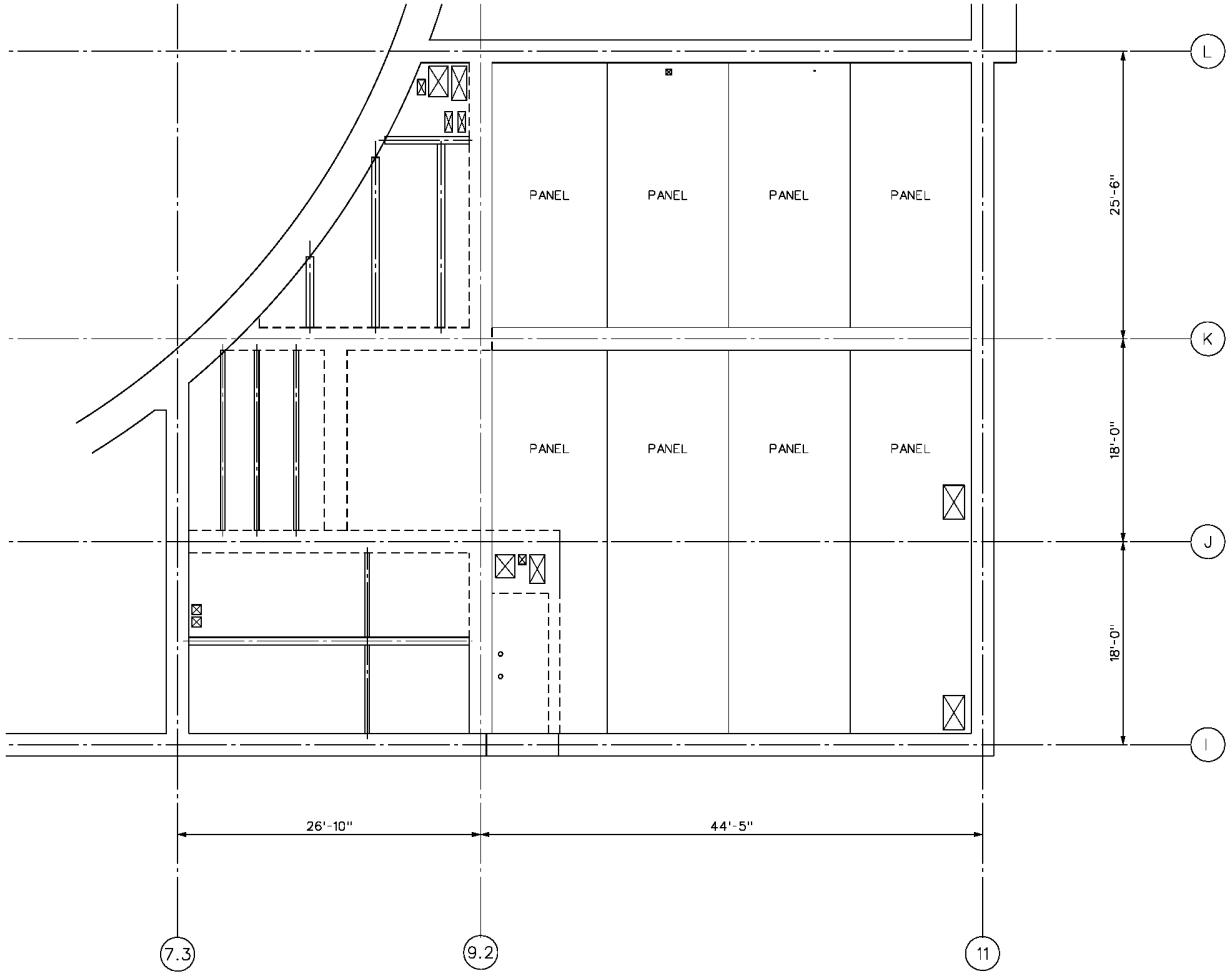

Figure 3H.5-9 (Sheet 1 of 3)

[*Auxiliary Building Finned Floor*]*

*NRC Staff approval is required prior to implementing a change in this information; see DCD Introduction Section 3.5.

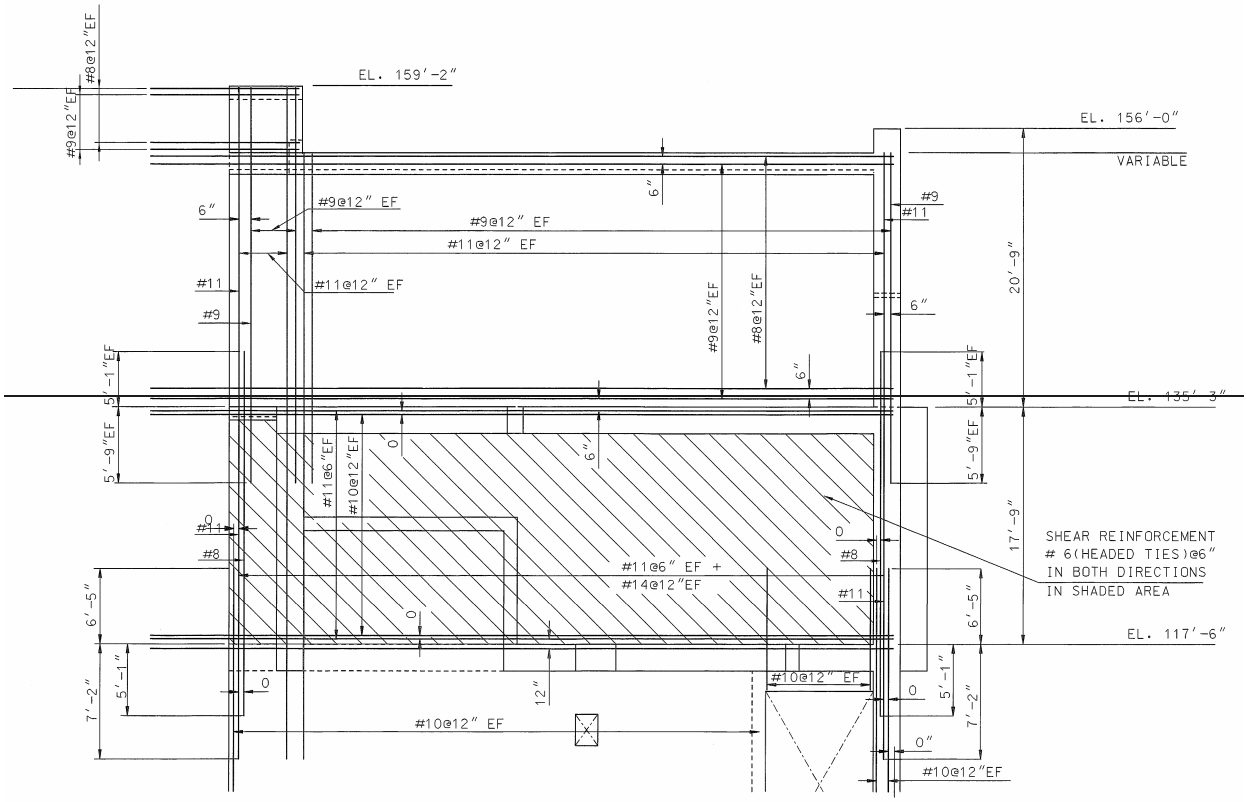

*NRC Staff approval is required prior to implementing a change in this information; see DCD Introduction Section 3.5.

NRC 094

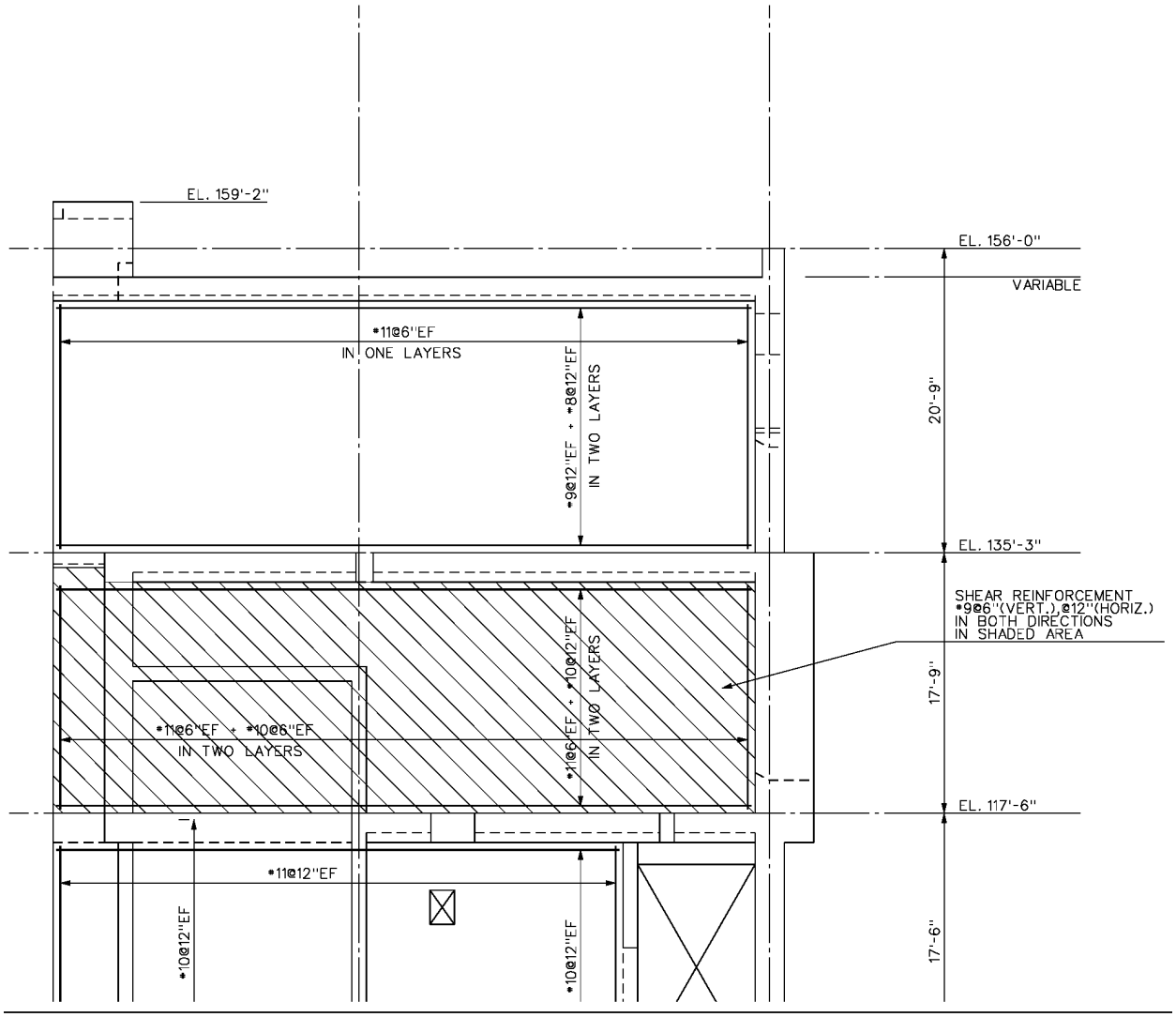

Figure 3H.5-12

[*Typical Reinforcement in Wall L*]*

*NRC Staff approval is required prior to implementing a change in this information; see DCD Introduction Section 3.5.

The diverse automatic actuations are:

- Trip rods via the motor generator set, trip turbine, initiate the passive residual heat removal, actuate core makeup tanks, and trip the reactor coolant pumps on low wide-range steam generator water level
- Open the passive heat removal discharge isolation valves and close the in-containment refueling water storage tank gutter isolation valves on high hot leg temperature
- Trip rods via the motor generator set, trip turbine, actuate the core makeup tanks, and trip the reactor coolant pumps on low pressurizer water level
- Isolate selected containment penetrations and start passive containment cooling water flow on high containment temperature

The selection of setpoints and time responses determine that the automatic functions do not actuate unless the protection and safety monitoring system has failed to actuate to control plant conditions. Capability is provided for testing and calibrating the channels of the diverse actuation system.

Manual Actuation Function

NRC 111

[*The manual actuation function of the diverse actuation system is implemented by hard-wiring the controls located in the main control room directly to the final loads in a way that completely bypasses the normal path through ~~the control room multiplexers~~, the protection and safety monitoring system cabinets, and the diverse actuation system automatic logic.*]*

The diverse manual functions are:

- Reactor and turbine trip
- Passive containment cooling actuation
- Core makeup tank actuation and reactor coolant pump trip
- Open stage 1 automatic depressurization system valves
- Open stage 2 automatic depressurization system valves
- Open stage 3 automatic depressurization system valves
- Open stage 4 automatic depressurization system valves
- Open the passive residual heat removal discharge isolation valves and close the in-containment refueling water storage tank gutter isolation valves
- Selected containment penetration isolation

*NRC Staff approval is required prior to implementing a change in this information; see DCD Introduction Section 3.5.

ATTACHMENT B

Tier 2

Chapter 1

TABLE OF CONTENTS

Section	Title	Page
CHAPTER 1	INTRODUCTION AND GENERAL DESCRIPTION OF THE PLANT	1.1-1
1.1	Introduction	1.1-1
1.1.1	Plant Location	1.1-1
1.1.2	Containment Type	1.1-1
1.1.3	Reactor Type	1.1-1
1.1.4	Power Output	1.1-1
1.1.5	Schedule	1.1-1
1.1.6	Format and Content	1.1-2
1.1.6.1	Regulatory Guide 1.70	1.1-2
1.1.6.2	Standard Review Plan	1.1-2
1.1.6.3	Text, Tables and Figures	1.1-2
1.1.6.4	Numbering of Pages	1.1-2
1.1.6.5	Proprietary Information	1.1-2
1.1.6.6	DCD Acronyms	1.1-2
1.1.7	Combined License Information	1.1-3
NRC 130 ~~1.1.8~~	~~References~~	~~1.1-3~~
1.2	General Plant Description	1.2-1
1.2.1	Design Criteria, Operating Characteristics, and Safety Considerations	1.2-1
1.2.1.1	Overall Plant	1.2-1
1.2.1.2	Reactor Coolant System Design	1.2-5
1.2.1.3	Steam and Power Conversion System Design	1.2-7
1.2.1.4	Auxiliary Fluid Systems Design	1.2-8
1.2.1.5	Electrical and Control Systems Designs	1.2-10
1.2.1.6	Plant Arrangement and Construction	1.2-12
1.2.2	Site Description	1.2-13
1.2.3	Plant Arrangement Description	1.2-15
1.2.4	Nuclear Island	1.2-15
1.2.4.1	Containment Building	1.2-15
1.2.4.2	Shield Building	1.2-18
1.2.4.3	Auxiliary Building	1.2-20
1.2.5	Annex Building	1.2-22
1.2.6	Diesel Generator Building	1.2-23
1.2.7	Radwaste Building	1.2-24
1.2.8	Turbine Building	1.2-24
1.2.9	Combined License Information	1.2-25
1.3	Comparisons With Similar Facility Designs	1.3-1
1.4	Identification of Agents and Contractors	1.4-1
1.4.1	Applicant – Program Manager	1.4-1
1.4.2	Other Contractors and Participants	1.4-1
1.4.2.1	Bechtel North American Power Corporation	1.4-1
1.4.2.2	Southern Electric International	1.4-2
1.4.2.3	Burns & Roe Company	1.4-2
1.4.2.4	Washington Group (MK-Ferguson Company)	1.4-2

1.1.7 Combined License Information

NRC 130

Combined License applicants referencing the AP1000 certified design will provide the ~~Generic~~ construction and startup schedule information. ~~for the AP1000 certified design is provided in APP-GW-GLR-036 (Reference 1).~~

~~1.1.8 References~~

~~1. APP-GW-GLR-036, "Construction Plan and Startup Schedule," Westinghouse Electric Company LLC.~~

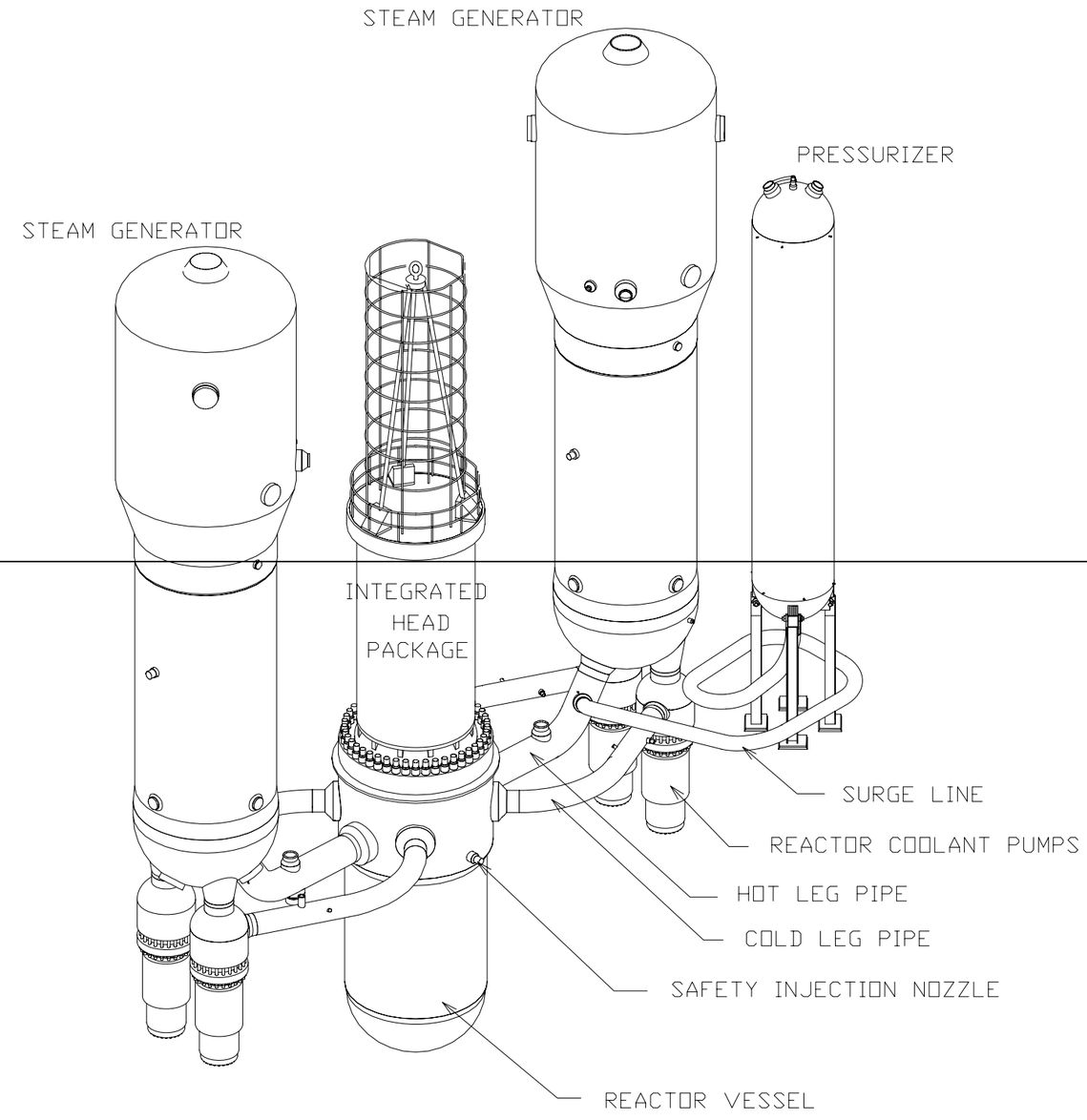
STEAM GENERATOR
PRESSURIZER
STEAM GENERATOR
INTEGRATED
HEAD
PACKAGE
SURGE LINE
REACTOR COOLANT PUMPS
HOT LEG PIPE
COLD LEG PIPE
SAFETY INJECTION NOZZLE
REACTOR VESSEL

NRC 106

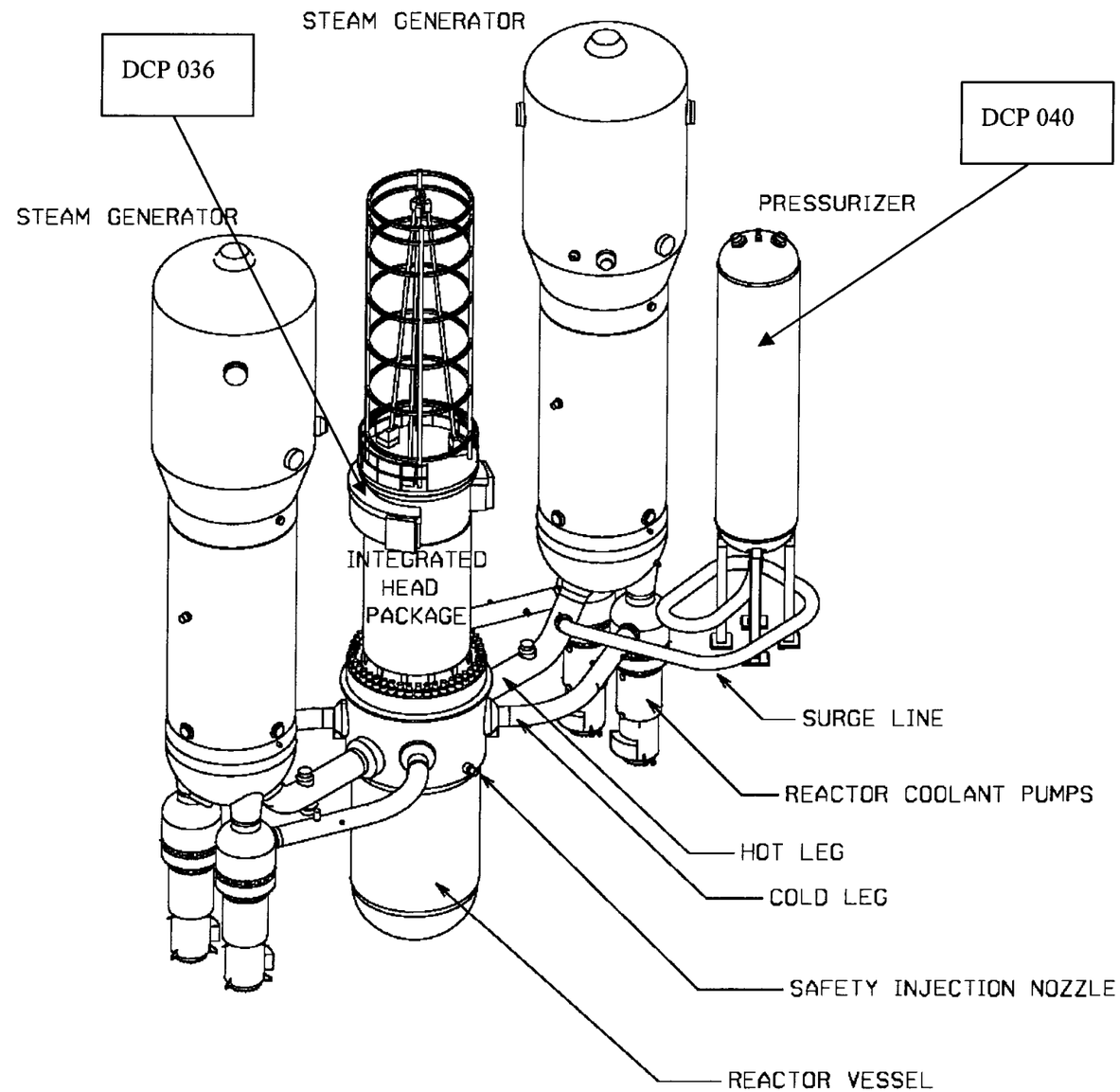

Figure 1.2-1

Reactor Coolant System

Security-Related Information, Withhold Under 10 CFR 2.390d

NRC 106
NRC 107

Figure 1.2-9

Nuclear Island General Arrangement Plan at Elevation 117′-6″ with Equipment

Table 1.3-1 (Sheet 1 of 6)

AP1000 PLANT COMPARISON WITH SIMILAR FACILITIES

Systems – Components	DCD	AP1000	AP600	Reference 2 Loop
Plant design objective	1.2	60 yrs	60 yrs	40 yrs
NSSS power	4.0	3,415 MWt	1,940 MWt	3,410 MWt
Core power	4.0	3,400 MWt	1,933 MWt	3,390 MWt
NRC 147 Net electrical output	1.2	≥1,000 MWe	600 MWe	1,075 MWe
Reactor operating pressure	5.1	2,250 psia	2,250 psia	2,250 psia
Hot leg temp	5.1	610°F	600°F	611°F (Cycle 1) 603°F (current)
Steam Generator Design pressure	5.4	1200 psia	1200 psia	1100 psia
Main feedwater temp	10.3	440°F	435°F	445°F
Core	4.0			
Number fuel assem.		157	145	217
Active fuel length		168 in	144 in	150 in
Fuel assembly array		17 x 17	17 x 17	16 x 16
Fuel rod OD		0.374 in	0.374 in	0.382 in
Number control assem.		53	45	83
– Absorber material		Ag-In-Cd	Ag-In-Cd	B_4C/Ag-In-Cd
Number gray rod assem.		16	16	8 (part length)
– Absorber material		SS-304/Ag-In-Cd	SS-304/Ag-In-Cd	Inconel 625/ B_4C
Avg linear power		5.707 kW/ft	4.10 kW/ft	5.34 kW/ft
Heat flux hot channel factor, FQ		2.60	2.60	2.35

Table 1.6-1 (Sheet 12 of 20)

MATERIAL REFERENCED

DCD Section Number	Westinghouse Topical Report Number	Title
6A	WCAP-15846 (P) WCAP-15862	WGOTHIC Application to AP600 and AP1000, Revision 1, March 2004
	WCAP-14135 (P) WCAP-14138	Final Data Report for Passive Containment Cooling System Large Scale Test, Phase 2 and Phase 3, Revision 3, November 1998
	WCAP-15613 (P) WCAP-15706	AP1000 PIRT and Scaling Assessment Report, March 2001
~~7.1~~	~~WCAP-13382 (P)~~ ~~WCAP-13391~~ ~~[*WCAP-13383*~~	~~AP600 Instrumentation and Control Hardware Description, May 1992~~ ~~*AP600 Instrumentation and Control Hardware and Software Design, Verification, and Validation Process Report, Revision 1, June 1996*]*~~
7.1	*[WCAP-14605 (P)* *WCAP-14606 (NP)*	*Westinghouse Setpoint Methodology for Protection Systems – AP600, April 1996]**
	~~[~~WCAP-16361-P WCAP-16361-NP	Westinghouse Setpoint Methodology for Protection Systems - AP1000, May 2006~~]*~~
	~~WCAP-14080 (P)~~ ~~WCAP-14081~~	~~AP600 Instrumentation and Control Software Architecture and Operation Description, June 1994~~
	[*WCAP-16096-NP-A*~~*CE-CES-195*~~	*Software Program Manual for Common Q Systems, Revision 01A, January 2004*~~*May 2000*~~]*
	[*WCAP-16097-P-A* ~~*CENPD-396-P (P)*~~ *WCAP-16097-NP-A*	*Common Qualified Platform, Revision 01, May 2003*~~*0*~~]*
	~~[*WCAP-15927*~~	~~*Design Process for AP1000 Common Q Safety Systems, August 2002*]*~~
	WCAP-15776	Safety Criteria for the AP1000 Instrumentation and Control Systems, April 2002
	WCAP-16675-P WCAP-16675-NP	AP1000 Protection and Safety Monitoring System Architecture Technical Report, February 2007
7.2	WCAP-16438-P WCAP-16438-NP	FMEA of AP1000 Protection and Safety Monitoring System, Revision 1, June 2006
	WCAP-16592-P WCAP-16592-NP	Software Hazards Analysis of AP1000 Protection and Safety Monitoring System, Revision 0, June 2006

NRC 153

NRC 153

NRC 153

(P) Denotes Document is Proprietary

*NRC Staff approval is required prior to implementing a change in this information; see DCD Introduction Section 3.5.

		WCAP-15776	Safety Criteria for the AP1000 Instrumentation and Control Systems, April 2002
NRC 153		WCAP-16097-P-A WCAP-16097-NP-A	Common Qualified Platform, Digital Plant Protection System, Appendix 3, May 2003
	7.3	WCAP-15776	Safety Criteria for the AP1000 Instrumentation and Control Systems, April 2002

*NRC Staff approval is required prior to implementing a change in this information; see DCD Introduction Section 3.5.

1.7 Drawings and Other Detailed Information

1.7.1 Electrical and Instrumentation and Control Drawings

Instrument and control functional diagrams, electrical one-line diagrams, and onsite standby diesel generator loading sequence and initiating circuit logic diagrams are listed in Table 1.7-1.

The legend for electrical power, control, lighting, and communication drawings are provided in Figure 1.7-1, sheets 1, 2, and 3. The index, notes, and symbols for instrument and control functional diagrams are provided in Figure 7.2~~1~~-1. NRC 110

1.7.2 Piping and Instrumentation Diagrams

Table 1.7-2 contains a list of piping and instrumentation diagrams (P&IDs) and the corresponding DCD figure numbers. The three letter system names are provided in Table 1.7-2. Figures appear at the end of the respective text section. The P&ID legend, Figure 1.7-2, sheets 1, 2, and 3, provides an explanation of AP1000 symbols and characters used in these DCD figures.

1.7.3 Combined License Information

This section has no requirement for additional information to be provided in support of the combined license application.

Table 1.8-2 (Sheet 4 of 13)

SUMMARY OF AP1000 STANDARD PLANT COMBINED LICENSE INFORMATION ITEMS

Item No.	Subject	Subsection	Addressed by Westinghouse Document	Action Required by COL Applicant	Action Required by COL Holder
3.8-2	Deleted Passive Containment Cooling System Water Storage Tank Examination	Deleted	APP-GW-GLR-021	N/A	N/A
3.8-3	Deleted As-Built Summary Report	Deleted	APP-GW-GLR-021	N/A	N/A
3.8-4	Deleted In-Service Inspection of Containment Vessel	Deleted	APP-GW-GLR-021	N/A	N/A
3.9-1	Reactor Internal Vibration Response	3.9.8.1	WCAP-16687-P	No	No
3.9-2	Design Specification and Reports	3.9.8.2	APP-GW-GLR-021	No	Yes
3.9-3	Snubber Operability Testing	3.9.8.3	N/A	Yes	–
3.9-4	Valve Inservice Testing	3.9.8.4	APP-GW-GLN-020	Yes	–
3.9-5	Surge Line Thermal Monitoring	3.9.8.5	N/A	Yes	–
3.9-6	Piping Benchmark Program	3.9.8.6	APP-GW-GLR-006	No	No
3.10-1	Experience-Based Qualification	3.10.6	APP-GW-GLN-006 APP-GW-GLR-031	No	No
3.11-1	Equipment Qualification File	3.11.5	APP-GW-GLN-110	No	Yes
4.2-1	Changes to Reference Reactor Design	4.2.5	APP-GW-GLR-059	No	No
4.3-1	Changes to Reference Reactor Design	4.3.4	APP-GW-GLR-059 APP-GW-GLR-119	No	No
4.4-1	Changes to Reference Reactor Design	4.4.7	~~N/A~~APP-GW-GLR-059 WCAP-16652-NP, Rev. 0	No~~Yes~~	No~~–~~

NRC 102
NRC 127

Table 1.8-2 (Sheet 5 of 13)

SUMMARY OF AP1000 STANDARD PLANT COMBINED LICENSE INFORMATION ITEMS

	Item No.	Subject	Subsection	Addressed by Westinghouse Document	Action Required by COL Applicant	Action Required by COL Holder
NRC 102 NRC 127	4.4-2	Confirm Assumptions for Safety Analyses DNBR Limits	4.4.7	~~N/A~~ APP-GW-GLR-059 WCAP-16652-NP, Rev. 0	~~Yes~~No	~~–~~Yes
	5.2-1	ASME Code and Addenda	5.2.6.1	N/A	Yes	–
	5.2-2	Plant Specific Inspection Program	5.2.6.2	N/A	Yes	–
	5.3-1	Reactor Vessel Pressure – Temperature Limit Curves	5.3.6.1	APP-GW-GLR-021	No	Yes
	5.3-2	Reactor Vessel Materials Surveillance Program	5.3.6.2	N/A	Yes	–
	5.3-3	Surveillance Capsule Lead Factor and Azimuthal Location Confirmation	5.3.6.3	APP-GW-GLR-023	No	No
NRC 127	5.3-4	Reactor Vessel Materials Properties Verification	5.3.6.4.1	N/A~~APP-GW-GLR-023~~	No	Yes
	5.3-5	Reactor Vessel Insulation	5.3.6.5	APP-GW-GLR-060	No	No
	5.3-6	Analysis of Reactor Vessel Insulation and Support Structure	5.3.6.4.2	APP-GW-GLR-060	No	No
	5.4-1	Steam Generator Tube Integrity	5.4.15	N/A	Yes	–
	6.1-1	Procedure Review for Austenitic Stainless Steels	6.1.3.1	N/A	Yes	–
	6.1-2	Coating Program	6.1.3.2	N/A	Yes	–
	6.2-1	Containment Leak Rate Testing	6.2.6	N/A	Yes	–
	6.3-1	Containment Cleanliness Program	6.3.8.1	N/A	Yes	–

Table 1.8-2 (Sheet 6 of 13)

SUMMARY OF AP1000 STANDARD PLANT COMBINED LICENSE INFORMATION ITEMS

NRC 127

Item No.	Subject	Subsection	Addressed by Westinghouse Document	Action Required by COL Applicant	Action Required by COL Holder
6.3-2	Verification of Containment Resident Particulate Debris Characteristics	6.3.8.2	APP-GW-GLR-079	No	No~~Yes~~
6.4-1	Local Hazardous Gas Services and Monitoring	6.4.7	N/A	Yes	–
6.4-2	Procedures for Training for Control Room Habitability	6.4.7	N/A	Yes	–
6.4-3	Main Control Room Inleakage Test Frequency	6.4.7	APP-GW-GLR-007	No	No
6.6-1	Inspection Programs	6.6.9.1	N/A	Yes	–
6.6-2	Construction Activities	6.6.9.2	N/A	Yes	–
7.1-1	Setpoint Calculations for Protective Functions	7.1.6.1	WCAP-16361-P	No	No
7.1-2	Resolution of Generic Open Items and Plant-Specific Action Items	7.1.6.2	APP-GW-GLR-017	No	No
7.2-1	FMEA for Protection System	7.2.3	WCAP-16438-P WCAP-16592-P	No	No
8.2-1	Offsite Electrical Power	8.2.5	N/A	Yes	–
8.2-2	Technical Interfaces	8.2.5	N/A	Yes	–
8.3-1	Grounding and Lightning Protection	8.3.3	N/A	Yes	–
8.3-2	Onsite Electrical Power Plant Procedures	8.3.3	N/A	Yes	–
9.1-1	New Fuel Rack	9.1.6.1	APP-GW-GLR-026	No	No

Table 1.8-2 (Sheet 8 of 13)

SUMMARY OF AP1000 STANDARD PLANT COMBINED LICENSE INFORMATION ITEMS

Item No.	Subject	Subsection	Addressed by Westinghouse Document	Action Required by COL Applicant	Action Required by COL Holder
9.5-7	Fire Resistance Test Data	9.5.1.8.8	APP-GW-GLR-019	No~~Yes~~	No~~–~~
9.5-8	Establishment of Procedures to Minimize Risk for Fire Areas Breached During Maintenance	9.5.1.8.7	N/A	Yes	–
9.5-9	Offsite Interfaces	9.5.2.5.1	N/A	Yes	–
9.5-10	Emergency Offsite Communications	9.5.2.5.2	N/A	Yes	–
9.5-11	Security Communications	9.5.2.5.3	N/A	Yes	–
9.5-12	Cathodic Protection	9.5.4.7.1	APP-GW-GLR-120	No	No
9.5-13	Fuel Degradation Protection	9.5.4.7.2	APP-GW-GLR-120	Yes	–
10.1-1	Erosion-Corrosion Monitoring	10.1.3	N/A	No~~Yes~~	Yes~~No~~
10.2-1	Turbine Maintenance and Inspection	10.2.6	APP-GW-GLN-018	No	Yes
10.4-1	Circulating Water Supply	10.4.12.1	N/A	Yes	–
10.4-2	Condensate, Feedwater and Auxiliary Steam System Chemistry Control	10.4.12.2	N/A	Yes	–
10.4-3	Potable Water	10.4.12.3	N/A	Yes	–
11.2-1	Liquid Radwaste Processing by Mobile Equipment	11.2.5.1	N/A	Yes	–
11.2-2	Cost Benefit Analysis of Population Doses	11.2.5.2	N/A	Yes	–
11.2-3	Identification of Ion Exchange and Adsorbent Media	11.2.5.3	APP-GW-GLR-008	No	No

Table 1.8-2 (Sheet 9 of 13)

SUMMARY OF AP1000 STANDARD PLANT COMBINED LICENSE INFORMATION ITEMS

Item No.	Subject	Subsection	Addressed by Westinghouse Document	Action Required by COL Applicant	Action Required by COL Holder
11.2-4	Dilution and Control of Boric Acid Discharge	11.2.5.4	APP-GW-GLR-014	No	No
11.3-1	Cost Benefit Analysis of Population Doses	11.3.5.1	N/A	Yes	–
11.3-2	Identification of Adsorbent Media	11.3.5.2	APP-GW-GLR-008	No	No
11.4-1	Solid Waste Management System Process Control Program	11.4.6	N/A	Yes	–
11.5-1	Plant Offsite Dose Calculation Manual (ODCM)	11.5.7	N/A	Yes	–
11.5-2	Effluent Monitoring and Sampling	11.5.7	N/A	Yes	–
11.5-3	10 CFR 50, Appendix I	11.5.7	N/A	Yes	–
12.1-1	ALARA and Operational Policies	12.1.3	N/A	Yes	–
12.2-1	Additional Contained Radiation Sources	12.2.3	N/A	Yes	–
12.3-1	Administrative Controls for Radiological Protection	12.3.5.1	N/A	Yes	~~Yes~~
12.3-2	Criteria and Methods for Radiological Protection	12.3.5.2	N/A	Yes	–
12.3-3	Groundwater Monitoring Program	12.3.5.3	N/A	Yes	–
12.3-4	Record of Operational Events of Interest for Decommissioning	12.3.5.4	N/A	Yes	–

NRC 127

Table 1.8-2 (Sheet 12 of 13)

SUMMARY OF AP1000 STANDARD PLANT COMBINED LICENSE INFORMATION ITEMS

	Item No.	Subject	Subsection	Addressed by Westinghouse Document	Action Required by COL Applicant	Action Required by COL Holder
	17.5-5	Maintaining Reliability of Risk-Significant SSCs	17.5.5	APP-GW-GLR-117	No	No
	17.5-6	Maintenance Activities Relevant to Maintenance Rule	17.5.6	APP-GW-GLR-117	No	No
	17.5-7	Operational Reliability Assurance Activities	17.5.7	APP-GW-GLR-117	No	No
	17.5-8	Operational Reliability Assurance Program Integration with Quality Assurance Program	17.5.8	N/A	Yes	–
NRC 124 NRC 127	18.2-1	Execution of the NRC Approved Human Factors Engineering Program	18.2.6.1	APP-GW-GLR-012~~N/A~~	No~~Yes~~	No~~–~~
NRC 175	18.2-2	Design of the Emergency Operations Facility	18.2.6.2	APP-GW-GLR-136~~N/A~~	Yes	No~~–~~
NRC 126 NRC 127	18.5-1	Task Analysis	18.5.4.1	APP-GW-GLR-081 APP-GW-GLR-090	No~~Yes~~	No~~–~~
NRC 125 NRC 127	18.5-2	Main Control Room	18.5.4.2	APP-GW-GLR-010 APP-GW-GLR-090	No~~Yes~~	No~~–~~
NRC 127	18.6-1	Plant Staffing	18.6.1	APP-GW-GLR-090~~N/A~~	Yes	–
	18.7-1	Execution and Documentation of the Human Reliability Analysis/Human Factors Engineering Integration	18.7.1	APP-GW-GL-011 APP-GW-GLR-090	No	No
NRC 127	18.8-1	Execution and Documentation of the Human System Interface Design Implementation Plan	18.8.5	APP-GW-GLR-082 APP-GW-GLR-090	No	No

Table 1.8-2 (Sheet 13 of 13)

SUMMARY OF AP1000 STANDARD PLANT COMBINED LICENSE INFORMATION ITEMS

Item No.	Subject	Subsection	Addressed by Westinghouse Document	Action Required by COL Applicant	Action Required by COL Holder
18.9-1	Procedure Development	18.9.1	APP-GW-GLR-040 APP-GW-GLR-090	No	No
18.10-1	Training Program Development	18.10.1	APP-GW-GLR-090~~N/A~~	Yes	–
18.11-1	Verification and Validation of AP1000 Human Factors Engineering Program	18.11.1	APP-GW-GLR-084 APP-GW-GLR-090	No	No
18.14-1	Human Performance Monitoring	18.14	APP-GW-GLR-090~~N/A~~	Yes	–
19.59.10-1	As-Built SSC HCLPF Comparison to Seismic Margin Evaluation	19.59.10.5	APP-GW-GLR-021	No	Yes
19.59.10-2	Evaluation of As-Built Plant Versus Design in AP1000 PRA and Site-Specific PRA External Events	19.59.10.5	APP-GW-GLR-101	Yes	Yes
19.59.10-3	Internal Fire and Internal Flood Analyses	19.59.10.5	APP-GW-GLR-021	No	Yes
19.59.10-4	Develop and Implement Severe Accident Management Guidance	19.59.10.5	APP-GW-GLR-070	Yes	–
19.59.10-5	Equipment Survivability	19.59.10.5	APP-GW-GLR-021	No	Yes
	Bulletins and Generic Letters (WCAP-15800, Revision 3, July 2004)	1.9.5.5	APP-GW-GLR-129	Yes~~No~~	No
	Unresolved Safety Issues and Generic Safety Issues	Table 1.9-2	APP-GW-GLR-129	Yes~~No~~	No

NRC 127

NRC 127

NRC 127

AP1000 Response:

The AP1000 safety-related passive systems include the following design features:

- The AP1000 does not include any safety-related pumps.
- The motor-operated valve design is simplified by extending opening and closing times and by using simplified, conservative valve designs.
- Safety-related motor-operated valves are designed to be cycled with the plant at power.
- Features are included in the design to provide proper operational testing of the appropriate check valves, motor-operated valves, and air-operated valves, including flow and differential pressure testing during shutdown conditions.

Subsection 3.9.8.4 defines the responsibility for the in-service testing program for ASME Code Class 1, 2, and 3 valves.

NRC 148

Subsection 3.9.6 summarizes the requirements for the in-service testing program, including industry standards and NRC recommendations. ~~A description of the in-service inspection program is included in the technical specifications provided in Chapter 16.~~ The AP1000 system and valve designs generally allow implementation of the NRC recommendations in Generic Letters 89-04 and 89-10. Requirements for nonsafety-related pumps and valves that support the operation of systems that preclude unnecessary operation of the safety-related passive systems are outlined in subsection 3.9.6.

The AP1000 in-service testing program provides for periodic testing of the safety-related passive system components. The safety-related passive system components and systems are designed to meet the intent of the ASME Code, Section XI, for in-service inspection.

The AP1000 is designed for the following basic types of in-service testing of safety-related components:

- Periodic functional testing of active components during power operation (such as cycling of specific valves)
- Periodic flow/differential pressure operability testing of active components
- Periodic leak testing of the containment isolation valves.
- Periodic system flow or heat transfer rate testing of passive safety-related injection or cooling features during plant shutdown

The passive system design includes specific features to support in-service test performance:

- Remotely operated valves can be exercised during plant operation.

Table 1.9-1 (Sheet 1 of 15)

REGULATORY GUIDE/DCD SECTION CROSS-REFERENCES

Division 1 Regulatory Guide		DCD Chapter, Section or Subsection
1.1	Net Positive Suction Head for Emergency Core Cooling and Containment Heat Removal System Pumps (Rev. 0, November 2, 1970)	This regulatory guide is not applicable to AP1000.
1.2	Withdrawn	
1.3	Assumptions Used for Evaluating the Potential Radiological Consequences of a Loss-of-coolant Accident for Boiling Water Reactors (Rev. 2, June 1974)	This regulatory guide is not applicable to AP1000.
1.4	Assumptions Used for Evaluating the Potential Radiological Consequences of a Loss-of-Coolant Accident for Pressurized Water Reactors (Rev. 2, June 1974)	The guidance of Reg. Guide 1.183, "Alternative Radiological Source Terms For Evaluating Design Basis Accidents At Nuclear Power Reactors" will be followed instead of Reg. Guide 1.4.
1.5	Assumptions Used for Evaluating the Potential Radiological Consequences of a Steam Line Break Accident for Boiling Water Reactors (Rev. 0, March 10, 1971)	This regulatory guide is not applicable to AP1000.
1.6	Independence Between Redundant Standby (Onsite) Power Sources and Between Their Distribution Systems (Rev. 0, March 10, 1971)	8.1 8.3.1 8.3.2 16.1 Bases
1.7	Control of Combustible Gas Concentration in Containment Following a Loss-of-Coolant Accident (Rev. 2, November 1978)	6.1.1 6.2.4 15.6.3 Appendix 15A
1.8	Qualification and Training of Personnel for Nuclear Power Plants (Rev. 3, 1 May 2000)	This regulatory guide is not applicable to AP1000 design certification.
1.9	Selection, Design, and Qualification of Diesel Generator Units Used as Onsite Electric Power Systems at Nuclear Power Plants (Proposed Rev. 3, November 1988)	This regulatory guide is not applicable to AP1000.
1.10	Withdrawn	
1.11	Instrument Lines Penetrating Primary Reactor Containment (Rev. 0, March 10, 1971)	3.6.2 6.2.3
1.12	Instrumentation for Earthquakes (Rev. 2, March 1997)	3.7.4

NRC 141

Table 1.9-1 (Sheet 2 of 15)

REGULATORY GUIDE/DCD SECTION CROSS-REFERENCES

Division 1 Regulatory Guide		DCD Chapter, Section or Subsection
1.13	Spent Fuel Storage Facility Design Basis (Proposed Rev. 2, December 1981)	9.1.2 9.1.3 9.1.4 16.1 Bases
1.14	Reactor Coolant Pump Flywheel Integrity (Rev. 1, August 1975)	5.4.1
1.15	Withdrawn	
1.16	Reporting of Operating Information - Appendix A Technical Specifications (Rev. 4, August 1975).	This regulatory guide is not applicable to AP1000 design certification.
1.17	Withdrawn	
1.18	Withdrawn	
1.19	Withdrawn	
1.20	Comprehensive Vibration Assessment Program for Reactor Internals During Preoperational and Initial Startup Testing (Rev.2, May 1976)	3.9.2 14
1.21	Measuring, Evaluating, and Reporting Radioactivity in Solid Wastes and Releases of Radioactive Materials in Liquid and Gaseous Effluents From Light-Water-Cooled Nuclear Power Plants (Rev. 1, June 1974)	11.5
1.22	Periodic Testing of Protection System Actuation Functions (Rev. 0, February 17, 1972)	7.1 7.2 7.4
1.23	Onsite Meteorological Program (Second Proposed Rev. 1, April 1986)	2.3
1.24	Assumptions Used for Evaluating the Potential Radiological Consequences of a Pressurized Water Reactor Radioactive Gas Storage Tank Failure (Rev. 0, March 23, 1972)	This regulatory guide is not applicable to AP1000.
1.25	Assumptions Used for Evaluating the Potential Radiological Consequences of a Fuel Handling Accident in the Fuel Handling and Storage Facility for Boiling and Pressurized Water Reactors (Rev. 0, March 23, 1972)	The guidance of Reg. Guide 1.183, “Alternative Radiological Source Terms For Evaluating Design Basis Accidents At Nuclear Power Reactors” will be followed instead of Reg. Guide 1.25.
1.26	Quality Group Classifications and Standards for Water-, Steam-, and Radioactive-Waste-Containing Components of Nuclear Power Plants (Rev. 3, February 1976)	3.2.2
1.27	Ultimate Heat Sink for Nuclear Power Plants (Rev. 2, January 1976)	6.2.2

NRC 141

Table 1.9-1 (Sheet 3 of 15)

REGULATORY GUIDE/DCD SECTION CROSS-REFERENCES

Division 1 Regulatory Guide		DCD Chapter, Section or Subsection
1.28	Quality Assurance Program Requirements (Design and Construction) (Rev. 3, August 1985)	2.5 17
1.29	Seismic Design Classification (Rev. 3, September 1978)	3.2.1
1.30	Quality Assurance Requirements for the Installation, Inspection, and Testing of Instrumentation and Electric Equipment (Rev. 0, August 11, 1972)	This regulatory guide is not applicable to AP1000 design certification.
1.31	Control of Ferrite Content in Stainless Steel Weld Metal (Rev. 3, April 1978)	4.5.1 4.5.2 5.2.3 5.3.2 6.1.1
1.32	Criteria for Safety-Related Electric Power Systems for Nuclear Power Plants (Rev. 2, February 1977)	8.1 8.2 8.3.1 8.3.2 16.1 Bases
1.33	Quality Assurance Program Requirements (Operation) (Second Proposed Rev. 3, November 1980)	3.11.2.1 3D.4.1.2 3D.6.4
1.34	Control of Electroslag Weld Properties (Rev. 0, December 28, 1972)	4.5.2 5.2.3 5.3.2
1.35	Inservice Inspection of Ungrouted Tendons in Pre-stressed Concrete Containments (Rev. 3, July 1990)	This regulatory guide is not applicable to AP1000.
1.35.1	Determining Prestressing Forces for Inspection of Prestressed Concrete Containments (Rev. 0, July 1990)	This regulatory guide is not applicable to AP1000.
1.36	Nonmetallic Thermal Insulation for Austenitic Stainless Steel (Rev. 0, February 23, 1973)	5.2.3 6.1.1
1.37	Quality Assurance Requirements for cleaning of Fluid Systems and Associated Components of Water-Cooled Nuclear Power Plants (Rev. 0, March 1973)	17
1.38	Quality Assurance Requirements for Packaging, Shipping, Receiving, Storage, and Handling of Items for Water-Cooled Nuclear Power Plants (Rev. 2, May 1977)	17
1.39	Housekeeping Requirements for Water-Cooled Nuclear Power Plants (Rev. 2, September 1977)	17

NRC 141

Table 1.9-1 (Sheet 4 of 15)

REGULATORY GUIDE/DCD SECTION CROSS-REFERENCES

Division 1 Regulatory Guide		DCD Chapter, Section or Subsection
1.40	Qualification Tests of Continuous-Duty Motors Installed Inside the Containment of Water-Cooled Nuclear Power Plants (Rev. 0, March 16, 1973)	This regulatory guide is not applicable to AP1000.
1.41	Preoperational Testing of Redundant Onsite Electric Power Systems to Verify Proper Load Group Assignments (Rev. 0, March 16, 1973)	14
1.42	Withdrawn	
1.43	Control of Stainless Steel Weld Cladding of Low-Alloy Steel Components (Rev. 0, May 1973)	5.2.3 5.3.2
1.44	Control of the Use of Sensitized Stainless Steel (Rev. 0, May 1973)	4.5.1 4.5.2 5.2.3 5.3.2 6.1.1 10.3
1.45	Reactor Coolant Pressure Boundary Leakage Detection Systems (Rev. 0, May 1973)	5.2.5 16.1 Bases
1.46	Withdrawn	
1.47	Bypassed and Inoperable Status Indication for Nuclear Power Plant Safety Systems (Rev. 0, May 1973)	6.3 7.2 7.3 7.4 7.5 8.3.2
1.48	Withdrawn	
1.49	Power Levels of Nuclear Power Plants (Rev. 1, December 1973)	16
1.50	Control of Preheat Temperature for Welding of Low-Alloy Steel (Rev. 0, May 1973)	5.2.3 5.3.2 6.1.1
1.51	Withdrawn	
1.52	Design, Testing, and Maintenance Criteria for Post Accident Engineered-Safety-Feature Atmosphere Cleanup System Air Filtration and Adsorption Units of Light-Water-Cooled Nuclear Power Plants (Rev. 2, March 1978)	~~6.5.1~~This regulatory guide is not applicable to AP1000.

NRC 141

NRC 141

Table 1.9-1 (Sheet 6 of 15)

REGULATORY GUIDE/DCD SECTION CROSS-REFERENCES

Division 1 Regulatory Guide		DCD Chapter, Section or Subsection
1.68	Initial Test Programs for Water-Cooled Nuclear Power Plants (Rev. 2, August 1978)	14 16.1 Bases
1.68.1	Preoperational and Initial Startup Testing of Feedwater and Condensate Systems for Boiling Water Reactor Power Plants (Rev. 1, January 1977)	This regulatory guide is not applicable to AP1000.
1.68.2	Initial Test Program to Demonstrate Remote Shutdown Capability for Water-Cooled Nuclear Power Plants (Rev. 1, July 1978)	14
1.68.3	Preoperational Testing of Instrument and Air Control Systems (Task RS 709-4) (Rev. 0, April 1982)	9.3.1 14
1.69	Concrete Radiation Shields for Nuclear Power Plants (Rev. 0, December 1973)	3.8.4 12.3
1.70	Standard Format and Content of Safety Analysis Reports for Nuclear Power Plants (Rev. 3, November 1978)	1.1
1.71	Welder Qualification for Areas of Limited Accessibility (Rev. 0, December 1973)	5.2.3.4.6
1.72	Spray Pond Piping Made From Fiberglass-Reinforced Thermosetting Resin (Rev. 2, November 1978)	This regulatory guide is not applicable to AP1000.
1.73	Qualification Tests of Electric Valve Operators Installed Inside the Containment of Nuclear Power Plants (Rev.0, January 1974)	3.11
1.74	Withdrawn	
1.75	Physical Independence of Electric Systems (Rev. 2, September 1978)	7.1 7.2 7.3 7.4 7.5 8.1 8.3.1 8.3.2 9.5.1
1.76	Design Basis Tornado for Nuclear Power Plants (Rev. 0, April 1974)	2.3 3.3

NRC 141

Table 1.9-1 (Sheet 7 of 15)

REGULATORY GUIDE/DCD SECTION CROSS-REFERENCES

Division 1 Regulatory Guide		DCD Chapter, Section or Subsection
1.77	Assumptions Used for Evaluating a Control Rod Ejection Accident for Pressurized Water Reactors (Rev. 0, May 1974)	The guidance of Reg. Guide 1.183, "Alternative Radiological Source Terms For Evaluating Design Basis Accidents At Nuclear Power Reactors" will be followed instead of Reg. Guide 1.77. 16.1 Bases
1.78	Evaluating the Habitability of a Nuclear Power Plant Control Room During a Postulated Hazardous Chemical Release (Rev. 1, December 2001)	2.2 6.4 9.4.1 9.5.1 16.1 Bases
1.79	Preoperational Testing of Emergency Core Cooling Systems for Pressurized Water Reactors (Rev. 1, September 1975)	14
1.80	Withdrawn	
1.81	Shared Emergency and Shutdown Electric Systems for Multi-Unit Nuclear Power Plant (Rev. 1, January 1975)	This regulatory guide is not applicable to AP1000.
1.82	Water Sources for Long Term Recirculation Cooling Following a Loss-of-Coolant Accident (Task 203-4) (Rev. 2, May, 1996)	6.3
1.83	Inservice Inspection of Pressurized Water Reactor Steam Generator Tubes (Rev. 1, July 1975)	5.4.2
1.84	Design and Fabrication Code Case Acceptability ASME Section III Division 1 (Rev. 32, June 2003)	4.5.1 4.5.2 5.2.1 5.2.3 10.3
1.85	Withdrawn	
1.86	Termination of Operating Licenses for Nuclear Reactors (Rev. 0, June 1974)	This regulatory guide is not applicable to AP1000 design certification.
1.87	Guidance for Construction of Class 1 Components in Elevated-Temperature Reactors (Rev. 1, June 1975)	This regulatory guide is not applicable to AP1000.
1.88	Withdrawn	

NRC 141

NRC 141

Table 1.9-1 (Sheet 8 of 15)

REGULATORY GUIDE/DCD SECTION CROSS-REFERENCES

Division 1 Regulatory Guide		DCD Chapter, Section or Subsection
1.89	Environmental Qualification of Certain Electric Equipment Important to Safety for Nuclear Power Plants (Task EE 042-2) (Rev. 1, June 1984)	3.11
1.90	Inservice Inspection of Prestressed Concrete Containment Structures With Grouted Tendons (Rev. 1, August 1977)	This regulatory guide is not applicable to AP1000.
1.91	Evaluations of Explosions Postulated to Occur on Transportation Routes Near Nuclear Power Plant Sites (Rev. 1, February 1978)	19.58
1.92	Combining Modal Responses and Spatial Components in Seismic Response Analysis (Rev. 1, February 1976)	3.7
1.93	Availability of Electric Power Sources (Rev. 0, December 1974)	8.1 8.3 16.1 Bases
1.94	Quality Assurance Requirements for Installation, Inspection, and Testing of Structural Concrete and Structural Steel During the Construction Phase of Nuclear Power Plants (Rev. 1, April 1976)	This regulatory guide is not applicable to AP1000 design certification.
1.95	Withdrawn	
1.96	Design of Main Steam Isolation Valve Leakage Control Systems for Boiling Water Reactor Nuclear Power Plants (Rev. 1, June 1976)	This regulatory guide is not applicable to AP1000.
1.97	Instrumentation for Light-Water-Cooled Nuclear Power Plants to Assess Plant and Environs Conditions During and Following an Accident (Rev. 3, May 1983)	7.5 18.8 16.1 Bases
1.98	Assumptions Used for Evaluating the Potential Radiological Consequences of a Radioactive Offgas System Failure in a Boiling Water Reactor (Rev. 0, March 1976)	This regulatory guide is not applicable to AP1000.
1.99	Radiation Embrittlement of Reactor Vessel Materials (Task ME 305-4) (Rev. 2, May 1988)	5.3.2 5.3.3 16.1 Bases
1.100	Seismic Qualification of Electric and Mechanical Equipment for Nuclear Power Plants (Task EE 108-5) (Rev. 2, June 1988)	3.10
1.101	Emergency Planning and Preparedness for Nuclear Power Reactors (Rev. 3, August 1992)	This regulatory guide is not applicable to AP1000 design certification.
1.102	Flood Protection for Nuclear Power Plants (Rev. 1, September 1976)	3.4

NRC 141

NRC 141

NRC 141

Table 1.9-1 (Sheet 9 of 15)

REGULATORY GUIDE/DCD SECTION CROSS-REFERENCES

Division 1 Regulatory Guide		DCD Chapter, Section or Subsection
1.103	Withdrawn	
1.104	Withdrawn	
1.105	Instrument Setpoints for Safety-Related Systems (Task 1C 010-5) (Rev. 3, December 1999)	7.1 16
1.106	Thermal Overload Protection for Electric Motors on Motor-Operated Valves (Rev. 1, March 1977)	8.1
1.107	Qualifications for Cement Grouting Tendons for Prestressing Tendons in Containment Structures (Rev. 1, February 1977)	This regulatory guide is not applicable to AP1000.
1.108	Withdrawn	
1.109	Calculation of Annual Doses to Man From Routine Releases of Reactor Effluents for the Purpose of Evaluating Compliance With 10 CFR Part 50 Appendix I (Rev. 1, October 1977)	11.3.3
1.110	Cost-Benefit Analysis for Radwaste Systems for Light-Water-Cooled Nuclear Power Reactors (Rev. 0, March 1976)	11.2 11.3
1.111	Methods for Estimating Atmospheric Transport and Dispersion of Gaseous Effluents in Routine Releases From Light-Water-Cooled Reactors (Rev. 1, July 1977)	2.3
1.112	Calculation of Releases of Radioactive Materials in Gaseous and Liquid Effluents From Light-Water-Cooled Power Reactors (Rev. 0-R, May 1977)	11.2.3 11.3.3
1.113	Estimating Aquatic Dispersion of Effluents From Accidental and Routine Reactor Releases for the Purpose of Implementing Appendix I (Rev. 1, April 1977)	This regulatory guide is not applicable to AP1000 design certification.
1.114	Guidance to Operators at the Controls and to Senior Operators in the Control Room of a Nuclear Power Unit (Rev. 2, May 1989)	This regulatory guide is not applicable to AP1000 design certification.
1.115	Protection Against Low-Trajectory Turbine Missiles (Rev 1, July 1977)	3.5 3.8.4
1.116	Quality Assurance Requirements for Installation, Inspection, and Testing of Mechanical Equipment and Systems (Rev. 0~~)~~-R, May 1977)	This regulatory guide is not applicable to AP1000 design certification.
1.117	Tornado Design Classification (Rev. 1, April 1978)	3.5 9.1.2

NRC 141

Table 1.9-1 (Sheet 10 of 15)

REGULATORY GUIDE/DCD SECTION CROSS-REFERENCES

	Division 1 Regulatory Guide		DCD Chapter, Section or Subsection
	1.118	Periodic Testing of Electric Power and Protection Systems (Rev. 3, April 1995)	7.1 8.1 8.3
	1.119	Withdrawn	
	1.120	Fire Protection Guidelines for Nuclear Power Plants (Rev. 1, November 1977)	9.5.1
NRC 141	1.121	Bases for Plugging Degraded PWR Steam Generator Tubes (Rev. 0, August 1976)	5.4.2 16.1 Bases
	1.122	Development of Floor Design Response Spectra for Seismic Design of Floor-Supported Equipment or Components (Rev. 1, February 1978)	3.7
	1.123	Withdrawn	
NRC 172	1.124	Service Limits and Loading Combinations for Class 1 Linear-Type Component Supports (Rev. 1, January 1978)	3.9.3, 9.1.2.1, 9.1.1.1
	1.125	Physical Models for Design and Operation of Hydraulic Structures and Systems for Nuclear Power Plants (Rev. 1, October 1978)	2.4
	1.126	An Acceptable Model and Related Statistical Methods for the Analysis of Fuel Densification (Rev. 1, March 1978)	4.2
	1.127	Inspection of Water-Control Structures Associated With Nuclear Power Plants (Rev. 1, March 1978)	This regulatory guide is not applicable to AP1000.
	1.128	Installation Design and Installation of Large Lead Storage Batteries for Nuclear Power Plants (Rev. 1, October 1978)	8.3.2
NRC 141	1.129	Maintenance, Testing, and Replacement of Large Lead Storage Batteries for Nuclear Power Plants (Rev. 1, February 1978)	16.1 Bases~~This regulatory guide is not applicable to AP1000 design certification.~~
	1.130	Service Limits and Loading Combinations for Class 1 Plate-and-Shell-Type Component Supports (Rev. 1, October 1978)	3.9.3
	1.131	Qualification Tests of Electric Cables, Field Splices and Connections for Light-Water-Cooled Nuclear Power Plants (Rev. 0, August 1977)	3.11
	1.132	Site Investigations for Foundations of Nuclear Power Plants (Rev. 1, March 1979)	This regulatory guide is not applicable to AP1000 design certification.
	1.133	Loose-Part Detection Program for the Primary System of Light-Water-Cooled Reactors (Rev. 1, May 1981)	4.4.6.4

Table 1.9-1 (Sheet 11 of 15)

REGULATORY GUIDE/DCD SECTION CROSS-REFERENCES

Division 1 Regulatory Guide		DCD Chapter, Section or Subsection
1.134	Medical Evaluation of Nuclear Power Plant Personnel Requiring Operator Licenses (Rev. 3, March 1998)	This regulatory guide is not applicable to AP1000 design certification.
1.135	Normal Water Level and Discharge at Nuclear Power Plants (Rev. 0, September 1977)	2.4
1.136	Material for Concrete Containments (Rev. 2, June 1981)	This regulatory guide is not applicable to AP1000.
1.137	Fuel-Oil Systems for Standby Diesel Generators (Rev. 1, October 1979)	9.5.4
1.138	Laboratory Investigation of Soils for Engineering Analysis and Design of Nuclear Power Plants (Rev. 0, April 1978)	This regulatory guide is not applicable to AP1000 design certification.
1.139	Guidance for Residual Heat Removal (Rev. 0, May 1978)	6.3 7.4
1.140	Design, Inspection, and Testing Criteria for Air Filtration and Adsorption Units of Normal Atmosphere Cleanup Systems in Light-Water-Cooled Nuclear Power Plants (Rev. 2, June 2001)	9.4.1 9.4.4 9.4.5 9.4.7 9.4.9 16.1 Bases
1.141	Containment Isolation Provisions for Fluid Systems (Rev. 0, April 1978)	6.2.4
1.142	Safety-Related Concrete Structures for Nuclear Power Plants (Other Than Reactor Vessels and Containments) (Rev. 1, October 1981)	3.8.3 3.8.4 3.8.5
1.143	Design Guidance for Radioactive Waste Management Systems, Structures, and Components Installed in Light-Water-Cooled Nuclear Power Plants (Rev. 1, October 1979)	3.8.4 10.4.8 11.2 11.3 11.4 11.5
1.144	Withdrawn	
1.145	Atmospheric Dispersion Models for Potential Accident Consequence Assessments at Nuclear Power Plants (Rev. 1, November 1982)	This regulatory guide is not applicable to AP1000 design certification.
1.146	Withdrawn	

NRC 141

Table 1.9-1 (Sheet 13 of 15)

REGULATORY GUIDE/DCD SECTION CROSS-REFERENCES

	Division 1 Regulatory Guide	DCD Chapter, Section or Subsection
1.159	Assuring the Availability of Funds for Decommissioning Nuclear Reactors (Rev. 0, August 1990)	This regulatory guide is not applicable to AP1000 design certification.
1.160	Monitoring the Effectiveness of Maintenance at Nuclear Power Plants (Rev. 2, March 1997)	This regulatory guide is not applicable to AP1000 design certification.
1.161	Evaluation of Reactor Pressure Vessels with Charpy Upper-Shelf Energy Less Than 50 Ft-Lb (Rev. 0, June 1995)	This regulatory guide is not applicable to AP1000 design certification.
1.162	Format and Content of Report for Thermal Annealing of Reactor Pressure Vessels (Rev. 0, February 1996)	This regulatory guide is not applicable to AP1000 design certification.
1.163	Performance Based Containment Leak-Test Program (Rev. 0, September 1995)	6.2 16.1 Bases
1.165	Identification and Characterization of Seismic Sources and Determination Safe Shutdown Earthquake Ground Motion (Rev. 0, March 1997)	
1.166	Pre-Earthquake Planning and Immediate Nuclear Power Plant Operator Postearthquake Actions (Rev. 0, March 1997)	This regulatory guide is not applicable to AP1000 design certification.
1.167	Restart of a Nuclear Power Plant Shut Down by a Seismic Event (Rev. 0, March 1997)	This regulatory guide is not applicable to AP1000 design certification.
1.168	Verification, Validation, Reviews, and Audits for Digital Computer Software Used in Safety Systems of Nuclear Power Plants (Rev. 0~~1~~, September 1997~~February 2004~~)	7
1.169	Configuration Management Plans for Digital Computer Software Used in Safety Systems of Nuclear Power Plants (Rev. 0, September 1997)	7
1.170	Software Test Documentation for Digital Computer Software Used in Safety Systems of Nuclear Power Plants (Rev. 0, September 1997)	7
1.171	Software Unit Testing for Digital Computer Software Used in Safety Systems of Nuclear Power Plants (Rev. 0, September 1997)	7

NRC 141

NRC 141

Table 1.9-1 (Sheet 14 of 15)

REGULATORY GUIDE/DCD SECTION CROSS-REFERENCES

	Division 1 Regulatory Guide	DCD Chapter, Section or Subsection
1.172	Software Requirements Specifications for Digital Computer Software Used in Safety Systems of Nuclear Power Plants (Rev. 0, September 1997)	7
1.173	Developing Software Life Cycle Processes for Digital Computer Software Used in Safety Systems of Nuclear Power Plants (Rev. 0, September 1997)	7
1.174	An Approach for using Probabilistic Risk Assessment in Risk-Informed Decisions On Plant-Specific Changes to the Licensing Basis (Rev. 0, July 1998)	This regulatory guide is not applicable to AP1000 design certification.
1.175	An Approach for Plant-Specific, Risk-Informed Decisionmaking: Inservice Testing (Rev. 0, July 1998)	This regulatory guide is not applicable to AP1000 design certification.
1.176	An Approach for Plant-Specific, Risk-Informed Decisionmaking: Graded Quality Assurance (Rev. 0, August 1998)	This regulatory guide is not applicable to AP1000 design certification.
NRC 141 1.177	An Approach for Plant-Specific, Risk-Informed Decisionmaking: Technical Specifications (Rev. 0, August 1998)	16.1 Bases~~This regulatory guide is not applicable to AP1000 design certification.~~
1.178	An Approach for Plant-Specific, Risk-Informed Decisionmaking: Inservice Inspection of Piping (Rev. 0, September 1998)	This regulatory guide is not applicable to AP1000 design certification.
1.179	Standard Format and Content of License Termination Plans for Nuclear Power Reactors (Rev. 0, January 1999)	This regulatory guide is not applicable to AP1000 design certification.
NRC 141 1.180	Guidelines for Evaluating Electromagnetic and Radio-Frequency Interference in Safety-Related Instrumentation and Control Systems (Rev. 0~~1~~, January 2000~~October 2003~~)	Appendix 3D
1.181	Content of the Updated Final Safety Analysis Report in Accordance with 10 CFR 50.71(e) (Rev. 0, September 1999)	This regulatory guide is not applicable to AP1000 design certification.
NRC 141 1.182	Assessing and Managing Risk Before Maintenance Activities at Nuclear Power Plants (Rev. 0, May 2000)	16.1 Bases~~This regulatory guide is not applicable to AP1000 design certification~~.

Table 1.9-1 (Sheet 15 of 15)

REGULATORY GUIDE/DCD SECTION CROSS-REFERENCES

Division 1 Regulatory Guide		DCD Chapter, Section or Subsection
1.183	Alternative Radiological Source Terms For Evaluating Design Basis Accidents At Nuclear Power Reactors (Rev. 0, July 2000)	2.3 4.2 6.5.1 15.4 15.6.3 15.7 16.1 Bases
1.184	Decommissioning of Nuclear Power Reactors (Rev. 0, August 2000)	This regulatory guide is not applicable to AP1000 design certification.
1.185	Standard Format and Content for Post-shutdown Decommissioning Activities Report (Rev. 0, August 2000)	This regulatory guide is not applicable to AP1000 design certification.
1.186	Guidance and Examples of Identifying 10 CFR 50.2 Design Bases (Rev. 0, December 2000)	This regulatory guide is not applicable to AP1000 design certification.
1.187	Guidance for Implementation of 10 CFR 50.59, Changes, Tests, and Experiments (Rev. 0, November 2000)	This regulatory guide is not applicable to AP1000 design certification.
1.189	Fire Protection for Operating Nuclear Power Plants (Rev. 0, April 2001)	This regulatory guide is not applicable to AP1000 design certification.
1.190	Calculational and Dosimetry Methods for Determining Pressure Vessel Neutron Fluence (Rev. 0, March 2001)	5.3.2.6.2.2
1.197	Demonstrating Control Room Envelope Integrity at Nuclear Power Reactors (Rev. 0, May 2003)	9.4.1

NRC 141

NRC 141

Criteria Section	Referenced Criteria	AP1000 Position	Clarification/Summary Description of Exceptions
NRC 140 C.4		Conforms	Technical Specifications exist for the passive containment cooling system and air inlet and air baffle.
Reg. Guide 1.28, Rev. 3, 8/85 – Quality Assurance Program Requirements (Design and Construction)			
General	ANSI/ASME N45.2-1977 ANSI/ASME NQA-1-1983 through NQA-1a-1983 Addenda	Conforms	The Westinghouse quality assurance program is described in Chapter 17. Refer to "Westinghouse Electric Company Quality Management System" (QMS) referenced therein for Westinghouse positions on regulatory guides within the scope of the quality assurance program. In some cases current industry consensus standards have replaced the standards specifically referenced by certain regulatory guides. In particular, the N45.2 series standards have been replaced by ASME NQA-1. Therefore, the "Quality Management System" may reference ASME NQA-1 ~~and NQA-2~~ rather than the N45.2 series standards when describing the Westinghouse position. QMS complies with ASME NQA-1-1994.
NRC 105			
2.	Criteria 17 10 CFR 50 Appendix B	Conforms	
Reg. Guide 1.29, Rev. 3, 9/78 – Seismic Design Classification			
C.1.a		Conforms	
C.1.b		Conforms	
C.1.c		Conforms	
C.1.d		Exception	The AP1000 normal residual heat removal system is nonsafety-related. The safety-related function of decay heat removal is provided by the safety-related passive residual heat removal heat exchanger of the passive core cooling system that is seismic Category I. The spent fuel pool cooling system does not have active components that are required for the safety-related decay heat removal function. This function is provided passively through a large heat sink of water in the pool. The spent fuel pool is sized to keep the fuel covered for at least 72 hours without active cooling or makeup following a loss of ac power sources. The 72-hour sizing calculation accounts for the maximum loss of water due to the rupture of non-seismic piping. seismic Category I components within the spent fuel pool cooling system include the

Criteria Section	Referenced Criteria	AP1000 Position	Clarification/Summary Description of Exceptions
Reg. Guide 1.30, Rev. 0, 8/72 – Quality Assurance Requirements for the Installation, Inspection, and Testing of Instrumentation and Electric Equipment			
General	ANSI/ASME N45.2.4-1972	N/A	Not applicable to AP1000 design certification. Section 17.5 defines the responsibility for the Quality Assurance program.
Reg. Guide 1.31, Rev. 3, 4/78 – Control of Ferrite Content in Stainless Steel Weld Metal			
General		Conforms	
C.1-5		Conforms	
Reg. Guide 1.32, Rev. 2, 2/77 – Criteria for Safety-Related Electric Power Systems for Nuclear Power Plants			
1.	IEEE Std. 308-1974	Exception	Regulatory Guide 1.32 endorses IEEE Std. 308-1974 (Reference 5), which has been superseded by IEEE Std. 308-1991(Reference 6). The AP1000 uses the latest version of the industry standards (as of 4/2001). This version is not endorsed by a regulatory guide but its use should not result in deviation from the design philosophy otherwise stated in Regulatory Guide 1.32. The guidelines are applicable to the Class 1E dc and UPS system only. There are no safety-related ac power systems in the AP1000.
1.a	Regulatory Guide 1.93	N/A	The AP1000 has no safety-related ac power system. Therefore, the guidelines specified in this criterion section recommending the availability of offsite power "within a few seconds" is not applicable.
1.b	IEEE Std. 308-1974, Section 5.3.4	Exception	See comment on Criterion Section 1.
NRC 140 1.c	IEEE Std. 450-1975	Exception~~N/A~~	Battery performance discharge test is per IEEE-Std 450-1995 as described in Bases for Technical Specification, Surveillance Requirement 3.8.7.6.~~Not applicable to AP1000 design certification. Section 13.5 defines the responsibility for development of procedures.~~
1.d	Regulatory Guide 1.6 Regulatory Guide 1.75	Exception	The guidelines are applicable to the Class 1E dc and UPS system only. There are no safety-related ac power systems in the AP1000.
1.e	Regulatory Guide 1.75	Exception	The guidelines are applicable to the Class 1E dc and UPS system only. There are no safety-related ac power systems in the AP1000.

Criteria Section	Referenced Criteria	AP1000 Position	Clarification/Summary Description of Exceptions
Reg. Guide 1.44, Rev. 0, 5/73 – Control of the Use of Sensitized Stainless Steel			
C.1-~~6~~2		Conforms	
C.3		Exception	Product forms with simple shapes are not corrosion tested provided they are water quenched following solution anneal. Cast metal and weld metal containing more than five percent delta ferrite also are not corrosion tested as they are not susceptible to sensitization.
C.4		Exception	Welding operations necessarily result in the weld heat affected zone (HAZ) being between the temperature of 800°F to 1500°F.
C.5		Conforms	
C.6		Exception	Extensive testing has been completed and documentation is available such that an intergranular corrosion test is not required for AP1000 welding procedures.
Reg. Guide 1.45, Rev. 0, 5/73 – Reactor Coolant Pressure Boundary Leakage Detection Systems			
C.1		Conforms	
C.2		Conforms	
C.3		Exception	The AP1000 reactor coolant pressure boundary leakage detection methods are selected and designed in accordance with the guidelines of this regulatory guide. No credit is taken for airborne particulate radiation measurement in quantifying the leak rate.
C.4		Conforms	
C.5		Conforms	
C.6		Exception	Airborne particulate radioactivity monitoring is not used to determine reactor coolant pressure boundary leakage.
C.7		Conforms	
C.8		Conforms	
C.9		Conforms	

NRC 060

Criteria Section	Referenced Criteria	AP1000 Position	Clarification/Summary Description of Exceptions
NRC 140 **Reg. Guide 1.54, Rev. 1, 7~~3~~/00 – Service Level I, II and III~~Quality Assurance Requirements for~~ Protective Coatings Applied to ~~Water-Cooled~~ Nuclear Power Plants**			
General	ASTM D 3843-00, ASTM D 3911-95, ASTM D 5144-00	Exception	Some coatings inside containment are nonsafety-related and satisfy appropriate ASTM Standards. See subsection 6.1.2 for additional information. Application is controlled by procedures using qualified personnel to provide a high quality product. The paint materials for coatings inside the containment are subject to 10 CFR Part 50 Appendix B Quality Assurance requirements. The quality assurance features of the AP1000 coatings systems are outlined in DCD subsection 6.1.2.1.6. Subsection 6.1.3 defines the responsibility for the coating program.
Reg. Guide 1.55 – Withdrawn			
Reg. Guide 1.56, Rev. 1, 7/78 – Maintenance of Water Purity in Boiling Water Reactors			
General		N/A	Applies to boiling water reactors only.
Reg. Guide 1.57, Rev. 0, 6/73 – Design Limits and Loading Combinations for Metal Primary Reactor Containment System Components			
General	ASME Code, Section III	Exception	The regulatory guide was issued in 1973. It refers to the ASME Code through the Summer 1973 Addenda. The acceptance criteria have been defined in greater detail in SRP 3.8.2. The AP1000 complies with the SRP acceptance criteria with the exception that the operating basis earthquake is excluded.
Reg. Guide 1.58 – Withdrawn			
Reg. Guide 1.59, Rev. 2, 8/77 – Design Basis Floods for Nuclear Power Plants			
C.1-4	Regulatory Guide 1.29	N/A	The maximum water level due to the probable maximum flood is established as a site interface in Chapter 2 and is used in the design of the AP1000. Subsection 2.4.1.2 defines the responsibility for addressing site-specific information on historical flooding and potential flooding factors.
Reg. Guide 1.60, Rev. 1, 12/73 – Design Response Spectra for Seismic Design of Nuclear Power Plants			
C.1		Conforms	
C.2		Conforms	

Criteria Section	Referenced Criteria	AP1000 Position	Clarification/Summary Description of Exceptions
Reg. Guide 1.186, Rev. 0, 12/00 – Guidance and Examples of Identifying 10 CFR 50.2 Design Bases			
General		N/A	Not applicable to AP1000 design certification. Subsection 1.9.1.5 defines the responsibility for Regulatory Guides not applicable to Design Certification.
Reg. Guide 1.187, Rev. 0, 11/00 – Guidance for Implementation of 10 CFR 50.59, Changes, Tests, and Experiments			
General		N/A	Not applicable to AP1000 design certification. Subsection 1.9.1.5 defines the responsibility for Regulatory Guides not applicable to Design Certification.
Reg. Guide 1.189, Rev. 0, 4/01 – Fire Protection for Operating Nuclear Power Plants			
General		N/A	Subsection 9.5.1 describes the AP1000 Fire Protection System. Subsection 9.5.1.8 defines the responsibility for completing a fire protection program.
Reg. Guide 1.190, Rev. 0, 4/01 – Calculational and Dosimetry Methods for Determining Pressure Vessel Neutron Fluence			
General		N/A	Subsection 5.3.2.6 describes the calculational and dosimetry methods for determining pressure vessel neutron fluence for the AP1000 subsection 5.3.6.4 defines the responsibility for reactor vessel materials properties verification.
Reg. Guide 1. 197, Rev. 0, 5/03 – Demonstrating Control Room Envelope Integrity at Nuclear Power Reactors			
General		Conforms	The design of the AP1000 control room and associated HVAC systems facilitates testing to demonstrate control room envelope integrity
C.1.1-2.6		N/A	Not applicable to AP1000 design certification. Section 13.5 defines the responsibility for procedures. Section 14.4 describes the responsibilities required to perform the AP1000 plant initial test program

NRC 140

Criteria Section	Referenced Criteria	AP1000 Position	Clarification/Summary Description of Exceptions
4.b-d		N/A	Not applicable to AP1000 design certification. Subsection 12.1.3 defines the responsibility for operational considerations of ALARA,
NRC 140 4.e~~3~~		Conforms	
Reg. Guide 8.10, Rev. 1-R, 5/77 – Operating Philosophy For Maintaining Occupational Radiation Exposures as Low as is Reasonably Achievable			
General		N/A	Not applicable to AP1000 design certification. Subsection 12.1.3 defines the responsibility for operational considerations of ALARA,
Reg. Guide 8.12 – Withdrawn			
Reg. Guide 8.13, Rev. 3, 6/99 – Instruction Concerning Prenatal Radiation Exposure			
General	10 CFR 19.12	N/A	Not applicable to AP1000 design certification. Subsection 12.1.3 defines the responsibility for operational considerations of ALARA, Section 13.5 defines the responsibility for administrative procedures.
Reg. Guide 8.14 – Withdrawn			
Reg. Guide 8.15, Rev. 1, 10/99 – Acceptable Programs for Respiratory Protection			
General	10 CFR 20.103	N/A	Not applicable to AP1000 design certification. Subsection 12.1.3 defines the responsibility for operational considerations of ALARA, See Section 12.3 for information on radiation protection design features. See Section 12.5 for information on health physics facilities. Section 13.5 defines the responsibility for administrative procedures.
Reg. Guide 8.19, Rev. 1, 6/79 – Occupational Radiation Dose Assessment in Light-Water Reactor Power Plants Design Stage Man-Rem Estimates			
General		Conforms	
Reg. Guide 8.38, Rev. 0, 6/93 – Control of Access to High and Very High Radiation Areas of Nuclear Plants			
General		Conforms	

Chapter 2

4. In lieu of (1) and (2) above, for a site where the nuclear island is founded on competent rock with shear wave velocity greater than 8000 feet per second and there are thin layers of soft material overlying the rock, the site-specific peak ground acceleration and spectra may be developed at the top of the competent rock and shown at the foundation level to be less than or equal to those given in Figures 3I.1-1 and 3I.1-2.

5. Foundation material layers are approximately horizontal (dip less than 20 degrees), and the median estimate of the low strain shear wave velocity of the soil below the foundation of the nuclear island is greater than or equal to 1000 feet per second.

6. For sites where the nuclear island is founded on soil, the median estimate of the strain-compatible soil shear modulus and hysteretic damping is compared to the values used in the AP1000 generic analyses shown in Table 3.7.1-4 and Figure 3.7.1-17. Properties of soil layers within a depth of 120 feet below finished grade are compared to those in the generic soil site analyses (soft soil, soft-to-medium soil, and upper bound soft-to-medium soil).

7. In lieu of (1) to (6) above, a site-specific evaluation can be performed as described in subsection 2.5.2.3.

Where features of the site are not within the parameters specified for the AP1000, site-specific soil structure interaction analyses may be performed using the 2D SASSI models described in Appendix 3G for variations in site conditions that can be represented in these models. Results should be compared to the results of the 2D SASSI analyses described in Appendix 3G. Such analyses may be used to demonstrate that local features, such as soil degradation properties or backfill, are bounded by the design cases. If the results are not clearly enveloped, then a 3D SASSI analysis may be required.

NRC 046

2.5.2.2 Site-Specific Seismic Structures

The AP1000 includes all seismic Category I structures, systems and components in the scope of the design certification.

2.5.2.3 Sites with Geoscience Parameters Outside the Certified Design

If the site-specific spectra at foundation level exceed the response spectra in Figures 3.7.1-1 and 3.7.1-2 at any frequency, or if soil conditions are outside the range evaluated for AP1000 design certification, a site-specific evaluation can be performed. This evaluation will consist of a site-specific dynamic analysis and generation of in-structure response spectra to be compared with the floor response spectra of the certified design at 5-percent damping. The site design response spectra at the foundation level in the free-field given in Figures 3.7.1-1 and 3.7.1-2 were used to develop the floor response spectra. They were applied at foundation level for the hard rock site and at finished grade level for the soil sites. The site is acceptable for construction of the AP1000 if the floor response spectra from the site-specific evaluation do not exceed the AP1000 spectra for each of the locations identified below:

Containment internal structures at elevation of reactor vessel support	Figure 3G.4-5
Containment operating floor	Figure 3G.4-6
Auxiliary building NE~~north east~~ corner at elevation 117′6″~~135′~~	Figure 3G.4-7
Shield building at fuel building roof	Figure 3G.4-8
Shield building roof	Figure 3G.4-9
Steel containment vessel at polar crane support	Figure 3G.4-10

NRC 046

Site-specific soil structure interaction analyses are performed using the 3D SASSI models described in Appendix 3G. The site-specific soil structure interaction analyses use the site-specific soil conditions (including variation in soil properties in accordance with Standard Review Plan 3.7.2). The three components of the site-specific ground motion time history must satisfy the regulatory requirements for statistical independence and enveloping of the site design spectra at 5% damping. Floor response spectra determined from the site-specific analyses should be~~are~~ compared against the design basis of the AP1000 described above. These evaluations and comparisons will be provided and reviewed as part of the Combined License application.

NRC 046

If the site-specific spectra at foundation level at a rock site exceed the response spectra in Figures 3I.1-1 and 3I.1-2 at any frequency, a site-specific evaluation can be performed similar to that described in Appendix 3I.

2.5.3 Surface Faulting Combined License Information

Combined License applicants referencing the AP1000 certified design will address the following surface and subsurface geological, seismological, and geophysical information related to the potential for surface or near-surface faulting affecting the site:

- Geological, seismological, and geophysical investigations
- Geological evidence, or absence of evidence, for surface deformation
- Correlation of earthquakes with capable tectonic sources
- Ages of most recent deformation
- Relationship of tectonic structures in the site area to regional tectonic structures
- Characterization of capable tectonic sources
- Designation of zones of quaternary deformation in the site region
- Potential for surface tectonic deformation at the site

2.5.4 Stability and Uniformity of Subsurface Materials and Foundations

Combined License applicants referencing the AP1000 certified design will address the following site-specific information related to the stability and uniformity of subsurface materials and foundations.

- Excavation

stratigraphic boundaries, lithologic changes, and unconformities, but most important, they should represent boundaries between layers having different shear wave velocities. Shear wave velocity is the primary property used for defining uniformity of a site.

The distribution of bearing reactions under the basemat is a function of the subgrade modulus, which in turn is a function of the shear wave velocity. The Combined License applicant shall demonstrate that the variation of subgrade modulus or shear wave velocity across the footprint is within the range considered for design of the nuclear island basemat. The farther that the non-uniform layer is located below the foundation, the less influence it has on the bearing pressures at the basemat. Lateral variability of the shear wave velocity at depths greater than 120 feet below grade (80 feet below the foundation) do not significantly affect the subgrade modulus.

If a site can be classified as uniform, it qualifies for the AP1000 based on analyses and evaluations performed to support design certification without additional site-specific analyses. For a site to be considered uniform, the variation of shear wave velocity in the material below the foundation to a depth of 120 feet below finished grade within the nuclear island footprint shall meet the criteria outlined below:

- The depth to a given layer indicated on each boring log may not fall precisely on the postulated "best-estimate" plane. The deviation of the observed layers from the "best-estimate" planes should not exceed 5 percent of the observed depths from the ground surface to the plane. If the deviation is greater than 5 percent, additional planes may be appropriate or additional borings may be required. This thereby diminishes the spacing.

- For a layer with a low strain shear wave velocity greater than or equal to 2500 feet per second, the layer should have approximately uniform thickness and should have a dip no greater than 20 degrees, and the shear wave velocity at any location within any layer should not vary from the average velocity within the layer by more than 20 percent.

- For a layer with a low strain shear wave velocity less than 2500 feet per second, the layer should have approximately uniform thickness and should have a dip no greater than 20 degrees, and the shear wave velocity at any location within any layer should not vary from the average velocity within the layer by more than 10 percent.

2.5.4.5.3.1 Site-Specific Subsurface Uniformity Design Basis

Many sites that do not meet the above criteria for a uniform site are acceptable for the AP1000. The key attribute for acceptability of the site for an AP1000 is the bearing pressure on the underside of the basemat. A site having local soft or hard spots within a layer or layers does not meet the criteria for a uniform site. Non-uniform soil conditions may also require evaluation of the AP1000 seismic response as described in subsection 2.5.2.3~~2~~. NRC 049

As described in subsection 3.8.5, the nuclear island foundation is designed specifically for bearing pressures of 120 percent of those of the uniform soil properties case. Evaluation criteria are defined to evaluate sites that do not satisfy the site parameters directly. The design basis provided below is included to provide a clear specification of the design commitment and evaluation criteria required to demonstrate that a site-specific application satisfies AP1000 requirements. Application of the

Table 2-1 (Sheet 1 of 3)

SITE PARAMETERS

Air Temperature	
Maximum Safety [(a)]	115°F dry bulb/80°F coincident wet bulb 85.5°F wet bulb (noncoincident)
Minimum Safety [(a)]	-40°F
Maximum Normal [(b)]	100°F dry bulb/80.1°F coincident wet bulb 80.1°F wet bulb (noncoincident) [(d)]
Minimum Normal [(b)]	-10°F
Wind Speed	
Operating Basis	145 mph (3 second gust); importance factor 1.15 (safety), 1.0 (nonsafety); exposure C; topographic factor 1.0
Tornado	300 mph
Seismic	
SSE	0.30g peak ground acceleration [(c)]
Fault Displacement Potential	~~None~~Negligible
Soil	
Average Allowable Static Bearing Capacity	Greater than or equal to 8,600 lb/ft^2 over the footprint of the nuclear island at its excavation depth
Maximum Allowable Dynamic Bearing Capacity for Normal Plus SSE	Greater than or equal to 35,000 lb/ft^2 at the edge of the nuclear island at its excavation depth
Shear Wave Velocity	Greater than or equal to 1,000 ft/sec based on low-strain best-estimate soil properties over the footprint of the nuclear island at its excavation depth
Lateral Variability	Soils supporting the nuclear island should not have extreme variations in subgrade stiffness Case 1: For a layer with a low strain shear wave velocity greater than or equal to 2500 feet per second, the layer should have approximately uniform thickness, should have a dip not greater than 20 degrees, and should have less than 20 percent variation in the shear wave velocity from the average velocity in any layer. Case 2: For a layer with a low strain shear wave velocity less than 2500 feet per second, the layer should have approximately uniform thickness, should have a dip not greater than 20 degrees, and should have less than 10 percent variation in the shear wave velocity from the average velocity in any layer (see subsection 2.5.4.5).

NRC 129

Table 2-1 (Sheet 2 of 3)

SITE PARAMETERS

Liquefaction Potential	None
NRC 171 Minimum Soil Angle of Internal Friction	Greater than or equal to 35 degrees below footprint of nuclear island at its excavation depth
Missiles	
Tornado	4000 - lb automobile at 105 mph horizontal, 74 mph vertical 275 - lb, 8 in. shell at 105 mph horizontal, 74 mph vertical 1 inch diameter steel ball at 105 mph horizontal and vertical
Flood Level	Less than plant elevation 100′
Ground Water Level	Less than plant elevation 98′
Plant Grade Elevation	Less than plant elevation 100′ except for portion at a higher elevation adjacent to the annex building
Precipitation	
Rain	19.4 in./hr (6.3 in./5 min)
Snow/Ice	75 pounds per square foot on ground with exposure factor of 1.0 and importance factors of 1.2 (safety) and 1.0 (non-safety)
Atmospheric Dispersion Values - χ/Q[(e)]	
Site boundary (0-2 hr)	$\leq 1.0 \times 10^{-3}$ sec/m^3
Site boundary (annual average)	$\leq 2.0 \times 10^{-5}$ sec/m^3
Low population zone boundary	
NRC 143 0 - 8 hr	$\leq$ 5.0~~2.2~~ x 10^{-4} sec/m^3
8 - 24 hr	$\leq$ 3.0~~1.6~~ x 10^{-4} sec/m^3
24 - 96 hr	$\leq$ 1.5~~1.0~~ x 10^{-4} sec/m^3
96 - 720 hr	$\leq 8.0 \times 10^{-5}$ sec/m^3
Population Distribution	
Exclusion area (site)	0.5 mi

Notes:

(a) Maximum and minimum safety values are based on historical data and exclude peaks of less than 2 hours duration.

(b) Maximum and minimum normal values are the 1 percent exceedance magnitudes.

(c) With ground response spectra as given in Figures 3.7.1-1 and 3.7.1-2. Seismic input is defined at finished grade except for sites where the nuclear island is founded on hard rock.

(d) The noncoincident wet bulb temperature is applicable to the cooling tower only.

(e) For AP1000, the terms “site boundary” and “exclusion area boundary” are used interchangeably. Thus, the χ/Q specified for the site boundary applies whenever a discussion refers to the exclusion area boundary.

Chapter 3

TABLE OF CONTENTS (Cont.)

Section	Title	Page
3G.4.2	3D SASSI Analyses	3G-7
3G.4.3	Seismic Analysis ~~Dynamic Results~~	3G-8
3G.4.3.1	Response Spectrum Analysis	3G-8
3G.4.3.2~~1~~	Absolute Accelerations	3G-8
3G.4.3.3	Seismic Response Spectrum	3G-8
3G.5	References	3G-8
APPENDIX 3H	AUXILIARY AND SHIELD BUILDING CRITICAL SECTIONS	3H-1
3H.1	Introduction	3H-1
3H.2	Description of Auxiliary Building	3H-1
3H.3	Design Criteria	3H-2
3H.3.1	Governing Codes and Standards	3H-3
3H.3.2	Seismic Input	3H-3
3H.3.3	Loads	3H-3
3H.3.4	Load Combinations and Acceptance Criteria	3H-7
3H.4	Seismic Analyses	3H-7
3H.4.1	Live Load for Seismic Design	3H-7
3H.5	Structural Design of Critical Sections	3H-8
3H.5.1	Shear Walls	3H-9
3H.5.1.1	Exterior Wall at Column Line 1	3H-10
3H.5.1.2	Wall at Column Line 7.3	3H-11
3H.5.1.3	Wall at Column Line L	3H-11
3H.5.1.4	Wall at Column Line 11	3H-11
3H.5.1.5	Shield Building Cylinder at Elevation 180′-0″	3H-12
3H.5.2	Composite Structures (Floors and Roof)	3H-12
3H.5.2.1	Roof at Elevation 180′-0″, Area 6 (Critical Section is between Col. Lines N & K-2 and 3 & 4)	3H-13
3H.5.2.2	Floor at Elevation 135′-3″, Area 1 (Between Column Lines M and P)	3H-14
3H.5.3	Reinforced Concrete Slabs	3H-14
3H.5.3.1	Tagging Room (Operations Work Area) Ceiling	3H-14
3H.5.4	Concrete Finned Floors	3H-15
3H.5.5	Structural Modules	3H-16
3H.5.5.1	West Wall of Spent Fuel Pool	3H-16
3H.5.6	Shield Building Roof	3H-17
3H.5.6.1	Tension Ring	3H-17
3H.5.6.2	Not Used	
3H.5.6.3	Exterior Wall of the Passive Containment Cooling System Tank	3H-17
APPENDIX 3I	EVALUATION FOR HIGH FREQUENCY SEISMIC INPUT	3I-1
3I.1	Introduction	3I-1
3I.2	High Frequency Seismic Input	3I-1

LIST OF TABLES (Cont.)

Table No.	Title	Page
3D.5-1	Normal Operating Environments (Sheets 1 – 3)	3D-40
3D.5-2	60-Year Normal Operating Doses	3D-43
3D.5-3	Abnormal Operating Environments Inside Containment	3D-44
3D.5-4	Abnormal Operating Environments Outside Containment	3D-45
3D.5-5	Accident Environments	3D-46
3D.6-1	Mechanical Equipment Components Requiring Environmental Qualification	3D-47
3D.B-1	Typical Class 1E Equipment Scope and Subprogram Allocation	3D-87
3D.B-2	Aging Mechanism Sequence	3D-88
3D.C-1	Radiation-Induced Degradation of Material Mechanical Properties (Sheets 1 – 2)	3D-93
3D.D-1	Activation Energies From Westinghouse Reports (Sheets 1 – 2)	3D-102
3G.1-1	Summary of Models and Analysis Methods (Sheets 1 – 3)	3G-10
3G.1-2	Summary of Dynamic Analyses and Combination Techniques	3G-13
3G.2-1	Steel Containment Vessel Lumped-Mass Stick Model (Without Polar Crane) Modal Properties (Sheet 1)	3G-14
3G.2-1	Steel Containment Vessel Lumped-Mass Stick Model (With Polar Crane) Modal Properties (Sheet 2)	3G-15
3G.2-2	Comparison of Frequencies for Containment Vessel Seismic Model	3G-16
3G.3-1	AP1000 ZPA for 2D SASSI Cases	3G-17
3G.4-1	Key Nodes at Location	3G-18
3H.5-1	Nuclear Island: Design Temperatures for Thermal Gradient	3H-18
3H.5-2	Not Used	
3H.5-3	Exterior Wall on Column Line 1 Details of Wall Reinforcement (Inch^2/foot)	3H-20
3H.5-4	Not Used	
3H.5-5	Interior Wall on Column Line 7.3 Details of Wall Reinforcement	3H-22
3H.5-6	Not Used	
3H.5-7	Interior Wall on Column Line L Details of Wall Reinforcement	3H-24
3H.5-8	Design Summary of Spent Fuel Pool Wall: Element No. 20477 (Sheet 1)	3H-25
3H.5-8	Design Summary of Spent Fuel Pool Wall: Element No. 10529 (Sheet 2)	3H-26
3H.5-9	Shield Building Roof Reinforcement Summary	3H-27
3H.5-10	Design Summary of Roof at Elevation 180′-0″, Area 6	3H-28
3H.5-11	Design Summary of Floor at Elevation 135′-3″ Area 1 (Between Column Lines M And P)	3H-29
3H.5-12	Design Summary of Floor at Elevation 135′-3″ Area 1 (Tagging Room Ceiling)	3H-30
3H.5-13	Design Summary of Floor at Elevation 135′-3″ Area 1 (Main Control Room Ceiling)	3H-31
3I.6-1	Potential Sensitive Equipment List	3I-8

LIST OF FIGURES

Figure No.	Title	Page
3.3-1	Velocity Pressure Variation with Radius from Center of Tornado	3.3-6
3.4-1	Nuclear Island Waterproofing MSE Wall Alternate	3.4-24
3.4-2	Nuclear Island Waterproofing Step Back Alternate	3.4-25
3.4-3	Nuclear Island Waterproofing Soil Nail Alternate	3.4-26
3.6-1	Typical U-Bar Restraint	3.6-53
3.6-2	Typical Energy Absorbing Material Restraint	3.6-54
3.6-3	Terminal Ends Definitions	3.6-55
3.7.1-1	Horizontal Design Response Spectra Safe Shutdown Earthquake	3.7-61
3.7.1-2	Vertical Design Response Spectra Safe Shutdown Earthquake	3.7-62
3.7.1-3	Design Horizontal Time History, "H1" Acceleration, Velocity & Displacement Plots	3.7-63
3.7.1-4	Design Horizontal Time History, "H2" Acceleration, Velocity & Displacement Plots	3.7-64
3.7.1-5	Design Vertical Time History Acceleration, Velocity & Displacement Plots	3.7-65
3.7.1-6	Acceleration Response Spectra of Design Horizontal Time History, "H1"	3.7-66
3.7.1-7	Acceleration Response Spectra of Design Horizontal Time History, "H2"	3.7-67
3.7.1-8	Acceleration Response Spectra of Design Vertical Time History	3.7-68
3.7.1-9	Minimum Power Spectral Density Curve (Normalized to 0.3g)	3.7-69
3.7.1-10	Power Spectral Density of Design Horizontal Time History, "H1"	3.7-70
3.7.1-11	Power Spectral Density of Design Horizontal Time History, "H2"	3.7-71
3.7.1-12	Power Spectral Density of Design Vertical Time History	3.7-72
3.7.1-13	Damping Values for Cable Trays & Supports	3.7-73
3.7.1-14	Nuclear Island Structures Dimensions	3.7-74
3.7.1-15	Strain Dependent Properties of Rock Material (Ref. 37)	3.7-75
3.7.1-16	Strain Dependent Properties of Soil Material (Ref. 38)	3.7-76
3.7.1-17	Generic Soil Profiles	3.7-77
3.7.2-1	Not Used	
3.7.2-2	Not Used	
3.7.2-3	Not Used	
3.7.2-4	Not Used	
3.7.2-5	Not Used	
3.7.2-6	Not Used	
3.7.2-7	Not Used	
3.7.2-8	Not Used	
3.7.2-9	Not Used	
3.7.2-10	Not Used	
3.7.2-11	Not Used	
3.7.2-12	Nuclear Island Key Structural Dimensions Plan at El. 66′-6″ (Sheet 1)	3.7-79
3.7.2-12	Nuclear Island Key Structural Dimensions Plan at El. 82′-6″ (Sheet 2)	3.7-81
3.7.2-12	Nuclear Island Key Structural Dimensions Plan at El. 100′-0″ & 107′-2″ (Sheet 3)	3.7-83
3.7.2-12	Nuclear Island Key Structural Dimensions Plan at El. 117′-6″ (Sheet 4)	3.7-85
3.7.2-12	Nuclear Island Key Structural Dimensions Plan at El. 135′-3″ (Sheet 5)	3.7-87

LIST OF FIGURES (Cont.)

Figure No.	Title	Page
3G.2-5A	Polar Crane Simplified Model	3G-24
3G.2-5B	Polar Crane Detailed Model	3G-25
3G.2-6	Reactor Coolant Loop Lumped-Mass Stick Model	3G-26
3G.2-7	Pressurizer Model	3G-27
3G.2-8	Core Makeup Tank Models	3G-28
3G.2-9	AP1000 Nuclear Island Solid-Shell Model (NI10)	3G-29
3G.2-10	Containment Internal Structure with the SCV, PC, Reactor Coolant Loop and Pressurizer	3G-30
3G.2-11	Soil Structure Interaction Model – NI20 Looking East	3G-31
3G.2-12	Coarse Model of Containment Internal Structures	3G-32
3G.3-1	Generic Soil Profiles	3G-33
3G.3-2	2D SASSI FRS – Node 41 X (ASB El. 99′)	3G-34
3G.3-3	2D SASSI FRS – Node 41Y (ASB El. 99′)	3G-35
3G.3-4	2D SASSI FRS – Node 120 X (ASB El. 179.6′)	3G-36
3G.3-5	2D SASSI FRS – Node 120 Y (ASB El. 179.6′)	3G-37
3G.3-6	2D SASSI FRS – Node 310 X (ASB El. 333.2′)	3G-38
3G.3-7	2D SASSI FRS – Node 310 Y (ASB El. 333.2′)	3G-39
3G.3-8	2D SASSI FRS – Node 411 X (SCV El. 200.0′)	3G-40
3G.3-9	2D SASSI FRS – Node 411 Y (SCV El. 200.0′)	3G-41
3G.3-10	2D SASSI FRS – Node 535 X (CIS El. 134.3′)	3G-42
3G.3-11	2D SASSI FRS – Node 535 Y (CIS El. 134.3′)	3G-43
3G.4-1	Auxiliary Shield Building “Rigid” Nodes at El. 135′	3G-44
3G.4-2	Auxiliary Shield Building “Flexible” Nodes at El. 135′	3G-45
3G.4-3	Excavated Soil	3G-46
3G.4-4	Additional Elements for Soil Pressure Calculations	3G-47
3G.4-5X	X Direction FRS for Node 130401 (NI10) or 1761 (N120) CIS at Reactor Vessel Support Elevation of 100′	3G-48
3G.4-5Y	Y Direction FRS for Node 130401 (NI10) or 1761 (N120) CIS at Reactor Vessel Support Elevation of 100′	3G-49
3G.4-5Z	Z Direction FRS for Node 130401 (NI10) or 1761 (N120) CIS at Reactor Vessel Support Elevation of 100′	3G-50
3G.4-6X	X Direction FRS for Node 105772 (NI10) or 2199 (N120) CIS at Operating Deck Elevation 134.25′	3G-51
3G.4-6Y	Y Direction FRS for Node 105772 (NI10) or 2199 (N120) CIS at Operating Deck Elevation 134.25′	3G-52
3G.4-6Z	Z Direction FRS for Node 105772 (NI10) or 2199 (N120) CIS at Operating Deck Elevation 134.25′	3G-53
3G.4-7X	X Direction FRS for Node 4724 (NI10) or 2078 (N120) ABC Control Room Side Elevation 116.50′	3G-54
3G.4-7Y	Y Direction FRS for Node 4724 (NI10) or 2078 (N120) ABC Control Room Side Elevation 134.88′	3G-55

LIST OF FIGURES (Cont.)

Figure No.	Title	Page
3G.4-7Z	Z Direction FRS for Node 4724 (NI10) or 2078 (N120) ABC Control Room Side Elevation 134.88′	3G-56
3G.4-8X	X Direction FRS for Node 5754 (NI10) or 2675 (N120) ABC Fuel Building Roof Elevation 179.19′	3G-57
3G.4-8Y	X Direction FRS for Node 5754 (NI10) or 2675 (N120) ABC Fuel Building Roof Elevation 179.19′	3G-58
3G.4-8Z	X Direction FRS for Node 5754 (NI10) or 2675 (N120) ABC Fuel Building Roof Elevation 179.19′	3G-59
3G.4-9X	X Direction FRS for Node 2862 (NI10) or 3329 (N120) ABC Shield Building Roof Elevation 327.41′	3G-60
3G.4-9Y	Y Direction FRS for Node 2862 (NI10) or 3329 (N120) ABC Shield Building Roof Elevation 327.41′	3G-61
3G.4-9Z	Z Direction FRS for Node 2862 (NI10) or 3329 (N120) ABC Shield Building Roof Elevation 327.41′	3G-62
3G.4-10X	X Direction FRS for Node 130412 (NI10) or 2788 (N120) SCV Near Polar Crane Elevation 244.00′	3G-63
3G.4-10Y	Y Direction FRS for Node 130412 (NI10) or 2788 (N120) SCV Near Polar Crane Elevation 244.00′	3G-63
3G.4-10Z	Z Direction FRS for Node 130412 (NI10) or 2788 (N120) SCV Near Polar Crane Elevation 244.00′	3G-63
3H.2-1	General Layout of Auxiliary Building	3H-32
3H.5-1	Nuclear Island Critical Sections Plan at El. 135′-3 (Sheet 1)	3H-33
3H.5-1	Nuclear Island Critical Sections Plan at El. 180′-0″ (Sheet 2)	3H-34
3H.5-1	Nuclear Island Critical Sections Plan Section A-A (Sheet 3)	3H-35
3H.5-2	Wall on Column Line 1 (Sheet 1)	3H-37
3H.5-2	Wall on Column Line 7.3 (Sheet 2)	3H-38
3H.5-2	Wall on Column Line L (Sheet 3)	3H-39
3H.5-3	Typical Reinforcement in Wall on Column Line 1	3H-40
3H.5-4	Typical Reinforcement in Wall 7.3	3H-41
3H.5-5	Concrete Reinforcement in Wall 11 (Sheet 1)	3H-42
3H.5-5	Concrete Reinforcement Layers in Wall 11 (Looking East) (Sheet 2)	3H-43
3H.5-5	Wall 11 at Main Steamline Anchor Section A-A (Sheet 3)	3H-44
3H.5-6	Auxiliary Building Typical Composite Floor	3H-45
3H.5-7	Typical Reinforcement and Connection to Shield Building	3H-47
3H.5-8	Auxiliary Building Tagging Room (Operation Work Area) Ceiling	3H-49
3H.5-9	Auxiliary Building Finned Floor (Sheets 1 – 3)	3H-51
3H.5-10	Spent Fuel Pool Wall Divider Wall Element Locations	3H-54
3H.5-11	Deleted	

AP1000 Compliance

The protection system is a microprocessor-based system that trips the reactor and actuates engineered safety features when predetermined limits are exceeded or when manually initiated.

The reactor trip portion of the protection system includes four independent, redundant, physically separated, electrically-isolated divisions. The coincidence circuits guard against the loss of protection or the generation of false protection signals due to equipment failures through the use of a two-out-of-four logic and built-in operational bypasses.

NRC 154

Independent, redundant, physically separated, electrically-isolated engineered safety features trains are provided. Signal conditioning for the plant sensors is provided. ~~Control and status signals are transmitted between the protection system and the main control room and the remote shutdown workstation and between the distributed logic circuits by internally redundant fiber optic data links.~~

See Chapter 7 for additional information concerning the design of the protection system.

Criterion 21 – Protection System Reliability and Testability

The protection system shall be designed for high functional reliability and in-service testability commensurate with the safety functions to be performed. Redundancy and independence designed into the protection system shall be sufficient to assure that (l) no single failure results in the loss of the protection function and (2) removal from service of any component or channel does not result in the loss of the required minimum redundancy unless the acceptable reliability of operation of the protection system can be otherwise demonstrated. The protection system shall be designed to permit periodic testing of its functioning when the reactor is in operation, including a capability to test channels independently to determine failures and losses of redundancy that may have occurred.

AP1000 Compliance

The protection system is designed for functional reliability and in-service testability. The design employs redundant logic trains and measurement and equipment diversity.

The protection system equipment includes integral testing circuits. System equipment, from input to output, in the protection cabinets and the engineered safety features cabinets, is tested. Simulated inputs replace the field signals. Outputs are monitored for validity. Manual and automatic testing is used to test the final stages of the reactor trip circuits and the reactor trip switchgear. Testing of cabinets and communications links verifies the functional operation of the equipment and the hardware. See Chapter 7 for further information concerning the test capabilities of the protection system.

Criterion 22 – Protection System Independence

The protection system shall be designed to assure that the effects of natural phenomena, and of normal operating, maintenance, testing, and postulated accident conditions on redundant channels do not result in the loss of the protection function or shall be demonstrated to be acceptable on

10 CFR 21 applies to Class B structures, systems, and components. Class B structures, systems, and components are seismic Category I and use codes and standards consistent with the guidelines for NRC Quality Group B. 10 CFR 50, Appendix B, and ASME Code, Section III, Class 2 or Class MC apply. ASME Code, Section III, Subsection NE applies to the containment vessel and guard pipes.

3.2.2.5 Equipment Class C

Class C is a safety-related class equivalent to ANS Safety Class 3. It applies to other safety-related functions required to mitigate design basis accidents and other design basis events. Minor leakage will not prevent Class C structures, systems, and components from meeting the safety-related function, either from the regard of radiation dose or system functioning.

This class also applies to equipment that, upon rupturing, would cause dose limits for unrestricted areas, as specified in 10 CFR 20, to be exceeded or would cause a loss of core cooling.

10 CFR 21 applies to Class C structures, systems, and components. Class C structures, systems, and components use codes and standards consistent with the guidelines for NRC Quality Group C. Class C structures, systems, and components are seismic Category I except those noted below which are not required to provide a safety-related function following a seismic event. 10 CFR 50, Appendix B and ASME Code, Section III, Class 3 apply. In addition to these requirements, for systems that provide emergency core cooling functions, full radiography in accordance with the requirements of ASME Code, Section III, ND-5222 of a random sample of welds will be conducted on the piping butt welds during construction. For Class C air and gas storage tanks fabricated without welding, ASME Code, Section VIII, Appendix 22 may be used in lieu of Section III, Class 3. 10 CFR 50, Appendix B requirements and 10 CFR 21 apply to the manufacture of safety-related air and gas storage tanks. For core support structures ASME Code, Section III, Subsection NG applies. For electrical systems, appropriate IEEE standards, including IEEE standard 323-74 (Reference 3) and IEEE standard 344-87 (Reference 4), apply.

NRC 164

Class C applies to structures, systems, and components not included in Class A or Class B that are designed and relied upon to accomplish one or more of the following safety-related functions:

- Provide safety injection or maintain sufficient reactor coolant inventory to allow for core cooling
- Provide core cooling
- Provide containment cooling
- Provide for removal of radiation from the containment atmosphere as necessary to meet the offsite dose limits
- Limit the buildup of radioactive material in the atmosphere of rooms and areas outside containment as necessary to meet the offsite dose limits

to. Sensing lines connected to the reactor coolant system pressure boundary are Class B if a suitable flow restrictor is provided.

The parts of the sensor, outside the pressure boundary, are designated Class C (1E) if they provide a safety-related function per subsection 3.2.2.1. They are Class D if the instrument supports Class D functions per subsection 3.2.2.6. Otherwise the parts are Class E.

3.2.2.9 Electrical Classifications

Safety-related electrical equipment is equipment Class C, as outlined in subsection 3.2.2.5, and is constructed to IEEE standards for Class 1E. The nonsafety-related electrical equipment and instrumentation is constructed to standards including non-Class 1E IEEE standards and National Electrical Manufacturers Association (NEMA) standards. Safety-related electrical equipment and instrumentation is identified in Section 3.11.

3.2.3 Inspection Requirements

Safety-related structures, systems, and components built to the requirements of the ASME Code, Section III, are required by 10 CFR 50.55a to have in-service inspections. The requirements of the in-service inspection program for ASME Code, Section III structures, systems, and components are found in Section XI of the ASME Code.

The following ASME standards apply to safety-related structures, systems, and components:

NRC 117

- Pumps (Class A, B, C) – ASME Code, Section XI, Subsections IWB, IWC, and IWD~~/ANSI OM Part 6~~

NRC 117

- Valves (Class A, B, C) – ASME Code, Section XI, Subsections IWB, IWC, and IWD~~/ANSI OM Part 10~~
- Equipment supports (Class A, B, C) – ASME Code, Section XI, Subsection IWF
- Metal containments and vessels – ASME Code, Section XI, Subsection IWE
- Other Class A components such as pipes and tanks – ASME Code, Section XI, Subsection IWB
- Other Class B components such as pipes and tanks – ASME Code, Section XI, Subsection IWC
- Other Class C components such as pipes and tanks – ASME Code, Section XI, Subsection IWD.

The inspection requirements, if applicable, for Class D structures, systems, and components are established by the designer for each structure, system, and component. These inspection requirements are developed so that the reliability of the structures, systems, and components is not degraded. The inspection requirements are included in the administratively controlled inspection or maintenance plans.

Table 3.2-3 (Sheet 1 of 65)

AP1000 CLASSIFICATION OF MECHANICAL AND FLUID SYSTEMS, COMPONENTS, AND EQUIPMENT

Tag Number	Description	AP1000 Class	Seismic Category	Principal Construction Code	Comments
Auxiliary Steam Supply System (ASS)					Location: Turbine Building
System components are Class E					
Steam Generator Blowdown System (BDS)					Location: Turbine Building
System components are Class E					
Compressed and Instrument Air System (CAS)					Location: Various
CAS-PL-V014	Instrument Air Supply Outside Containment Isolation	B	I	ASME III-2	
CAS-PL-V015	Instrument Air Supply Inside Containment Isolation	B	I	ASME III-2	
CAS-PL-V027	Containment Penetration Test Connection Isolation	B	I	ASME III-2	
CAS-PL-V204	Service Air Supply Outside Containment Isolation	B	I	ASME III-2	
CAS-PL-V205	Service Air Supply Inside Containment Isolation	B	I	ASME III-2	
CAS-PL-V219	Containment Penetration Test Connection Isolation	B	I	ASME III-2	
NRC 044 CAS-PY-C02	Containment Instrument Air Inlet Penetration	B	I	ASME III, 2~~MC~~	
NRC 044 CAS-PY-C03	Containment Service Air Inlet Penetration	B	I	ASME III, 2~~MC~~	
Balance of system components are Class E					
Component Cooling Water System (CCS)					Location: Auxiliary Building and Turbine Building
n/a	Heat Exchangers, CCS and SWS Side	D	NS	ASME VIII	
n/a	Pumps	D	NS	Hydraulic Institute Stds.	
n/a	Tanks	D	NS	ASME VIII	
n/a	Valves Providing CCS AP1000 Equipment Class D Function	D	NS	ANSI 16.34	
CCS-PL-V200	CCS Containment Isolation Valve - Inlet Line ORC	B	I	ASME III-2	
CCS-PL-V201	CCS Containment Isolation Valve - Inlet Line IRC	B	I	ASME III-2	

Table 3.2-3 (Sheet 2 of 65)

AP1000 CLASSIFICATION OF MECHANICAL AND FLUID SYSTEMS, COMPONENTS, AND EQUIPMENT

Tag Number	Description	AP1000 Class	Seismic Category	Principal Construction Code	Comments
Component Cooling Water System (Continued)					
CCS-PL-V207	CCS Containment Isolation Valve - Outlet Line IRC	B	I	ASME III-2	
CCS-PL-V208	CCS Containment Isolation Valve - Outlet Line ORC	B	I	ASME III-2	
CCS-PL-V209	Containment Isolation Valve Test Connection - Outlet Line	B	I	ASME III-2	
CCS-PL-V257	Containment Isolation Valve Test Connection - Inlet Line	B	I	ASME III-2	
NRC 044 CCS-PY-C01	Containment Supply Header Penetration	B	I	ASME III, 2~~MC~~	
NRC 044 CCS-PY-C02	Containment Return Header Penetration	B	I	ASME III, 2~~MC~~	
Balance of system components are Class E					
Condensate System (CDS)					Location: Turbine Building
System components are Class E					
Condenser Tube Cleaning System (CES)					Location: Turbine Building
System components are Class E					
Turbine Island Chemical Feed System (CFS)					Location: Turbine Building
System components are Class E					
Condenser Air Removal System (CMS)					Location: Turbine Building
n/a	Condenser Vacuum Breakers	E	NS	ANSI 16.34	
Balance of system components are Class D					
Containment System (CNS)					Location: Containment
CNS-MV-01	Containment Vessel	B	I	ASME III, MC	
CNS-MY-Y01	Equipment Hatch	B	I	ASME III, MC	
CNS-MY-Y02	Maintenance Hatch	B	I	ASME III, MC	
CNS-MY-Y03	Personnel Hatch - 135′-3″	B	I	ASME III, MC	
CNS-MY-Y04	Personnel Hatch - 107′-2″	B	I	ASME III, MC	
n/a	Spare Containment Penetrations	B	I	ASME III, MC	
Condensate Polishing System (CPS)					Location: Turbine Building
System components are Class E					

Table 3.2-3 (Sheet 4 of 65)

AP1000 CLASSIFICATION OF MECHANICAL AND FLUID SYSTEMS, COMPONENTS, AND EQUIPMENT

Tag Number	Description	AP1000 Class	Seismic Category	Principal Construction Code	Comments
Chemical and Volume Control System (Continued)					
CVS-PL-V092	Hydrogen Add Containment Isolation	B	I	ASME III-2	
CVS-PL-V094	Hydrogen Add IRC Isolation	B	I	ASME III-2	
CVS-PL-V096	Hydrogen Add Containment Isolation Test Connection	B	I	ASME III-2	
CVS-PL-V100	Makeup Line Containment Isolation Relief	B	I	ASME III-2	
CVS-PL-V136A	Demineralized Water System Isolation	C	I	ASME III-3	
CVS-PL-V136B	Demineralized Water System Isolation	C	I	ASME III-3	
CVS-PY-C01	Demineralizer Resin Flush Line Containment Penetration	B	I	ASME III, MC	
NRC 044 CVS-PY-C02	Letdown Line Containment Penetration	B	I	ASME III, ~~MC~~2	
CVS-PY-C03	Makeup Line Containment Penetration	B	I	ASME III, MC	
NRC 044 CVS-PY-C04	Hydrogen Add Line Containment Penetration	B	I	ASME III, 2~~MC~~	
Balance of system components are Class D or E					
Circulating Water System (CWS)			Location: Turbine Building and pump intake structure		
System components are Class E					
Standby Diesel and Auxiliary Boiler Fuel Oil System (DOS)			Location: Diesel Generator Building and yard		
n/a	Fuel Oil Transfer Package	D	NS	Manufacturer Std.	
n/a	Fuel Oil Storage Tanks	D	NS	API 650	
n/a	Fuel Oil Day Tanks	D	NS	ASME VIII	
n/a	Valves Providing DOS AP1000 Equipment Class D Function	D	NS	ANSI 16.34	
n/a	Ancillary Diesel Generator Fuel Tank	D	II	UL 142	
Balance of system components are Class E					

Table 3.2-3 (Sheet 5 of 65)

AP1000 CLASSIFICATION OF MECHANICAL AND FLUID SYSTEMS, COMPONENTS, AND EQUIPMENT

Tag Number	Description	AP1000 Class	Seismic Category	Principal Construction Code	Comments
Storm Drain System (DRS)					Location: Various
System components are Class E					
Demineralized Water Treatment System (DTS)					Location: Turbine Building
System components are Class E					
Demineralized Water Transfer and Storage System (DWS)					Location: Various
n/a	Condensate Storage Tanks	D	NS	API 650	
n/a	Valves Providing DWS AP1000 Equipment Class D Function	D	NS	ANSI 16.34	
DWS-PL-V244	Demineralized Water Supply Containment Isolation - Outside	B	I	ASME III-2	
DWS-PL-V245	Demineralized Water Supply Containment Isolation - Inside	B	I	ASME III-2	
DWS-PL-V248	Containment Penetration Test Connection Isolation	B	I	ASME III-2	
NRC 044 DWS-PY-C01	Containment Demineralized Water Supply Penetration	B	I	ASME III, 2~~MC~~	
Balance of system components are Class E					
Fuel Handling and Refueling System (FHS)					Location: Containment and Auxiliary Building
FHS-FH-02	Fuel Handling Machine	D	II/NS	AISC	
FHS-FH-52	Spent Fuel Assembly Handling Tool	D	II	AISC	
FHS-FS-01	New Fuel Storage Rack	D	I	Manufacturer Std.	
FHS-FS-02	Spent Fuel Storage Rack	D	I	Manufacturer Std.	
FHS-FT-01	Fuel Transfer Tube	B	I	ASME III Class MC	
FHS-MT-01	Spent Fuel Pool	C	I	ACI 349	ACI 349 Evaluation of Structural Boundary Only
FHS-MT-02	Fuel Transfer Canal	C	I	ACI 349	ACI 349 Evaluation of Structural Boundary Only

Table 3.2-3 (Sheet 6 of 65)

AP1000 CLASSIFICATION OF MECHANICAL AND FLUID SYSTEMS, COMPONENTS, AND EQUIPMENT

Tag Number	Description	AP1000 Class	Seismic Category	Principal Construction Code	Comments
Fuel Handling and Refueling System (Continued)					
FHS-MT-05	Spent Fuel Cask Loading Pit	C	I	ACI 349	ACI 349 Evaluation of Structural Boundary Only
FHS-MT-06	Spent Fuel Cask Washdown Pit	C	I	ACI 349	ACI 349 Evaluation of Structural Boundary Only
FHS-MY-Y01	Spent Fuel Transfer Gate	C	I	Manufacturer Std.	
FHS-MY-Y02	Spent Fuel Cask Loading Pit Gate	C	I	Manufacturer Std.	
FHS-PL-V001	Fuel transfer tube Isolation Valve	C	I	ASME-III-3	
FHS-PY-B01	Fuel Transfer Tube Blind Flange	B	I	ASME III-2	
Balance of system components are Class E					
Fire Protection System (FPS)					Location: Various
FPS-PL-V050	Fire Water Containment Supply Isolation	B	I	ASME III-2	
FPS-PL-V051	Fire Water Containment Test Connection Isolation	B	I	ASME III-2	
FPS-PL-V052	Fire Water Containment Supply Isolation - Inside	B	I	ASME III-2	
NRC 044 FPS-PY-C01	Fire Protection Containment Penetration	B	I	ASME III, 2~~MC~~	
Balance of system components are Class E					
Main and Startup Feedwater System (FWS)					Location: Turbine Building
n/a	Startup Feedwater Pumps	D	NS	Hydraulic Institute Standards	
n/a	Valves Providing SFW AP1000 Equipment Class D Function	D	NS	ANSI 16.34	
Balance of system components are Class E					

Table 3.2-3 (Sheet 13 of 65)

AP1000 CLASSIFICATION OF MECHANICAL AND FLUID SYSTEMS, COMPONENTS, AND EQUIPMENT

Tag Number	Description	AP1000 Class	Seismic Category	Principal Construction Code	Comments
Primary Sampling System (Continued)					
PSS-PL-V010B	Liquid Sample Line Containment Isolation IRC	B	I	ASME III-2	
PSS-PL-V011	Liquid Sample Line Containment Isolation ORC	B	I	ASME III-2	
PSS-PL-V012A	Liquid Sample Check Valve	C	I	ASME III-3	
PSS-PL-V012B	Liquid Sample Check Valve	C	I	ASME III-3	
PSS-PL-V023	Sample Return Line Containment Isolation ORC	B	I	ASME III-2	
PSS-PL-V024	Sample Return Containment Isolation Check IRC	B	I	ASME III-2	
PSS-PL-V046	Air Sample Line Containment Isolation ORC	B	I	ASME III-2	
PSS-PL-V076A	Containment Testing Boundary Isolation Valve	C	I	ASME III-3	
PSS-PL-V076B	Containment Testing Boundary Isolation Valve	C	I	ASME III-3	
PSS-PL-V082	Containment Isolation Test Connection Isolation Valve	C	I	ASME III-3	
PSS-PL-V083	Containment Isolation Test Connection Isolation Valve	C	I	ASME III-3	
PSS-PL-V085	Containment Isolation Test Connection Isolation Valve	B	I	ASME III-2	
PSS-PL-V086	Containment Isolation Test Connection Isolation Valve	C	I	ASME III-3	
PSS-PY-C01	Common Primary Sample Line Penetration	B	I	ASME III, MC	
PSS-PY-C02	Containment Atmosphere Sample Line Penetration	B	I	ASME III, MC	
NRC 044 PSS-PY-C03	Containment Atmosphere Sample Line Penetration	B	I	ASME III, 2~~MC~~	
Balance of system components are Class E					
Potable Water System (PWS)					Location: Various
System components are Class E					

Table 3.2-3 (Sheet 21 of 65)

AP1000 CLASSIFICATION OF MECHANICAL AND FLUID SYSTEMS, COMPONENTS, AND EQUIPMENT

Tag Number	Description	AP1000 Class	Seismic Category	Principal Construction Code	Comments
Passive Core Cooling System (Continued)					
PXS-PL-V232B	Accumulator B Fill/Drain Isolation	C	I	ASME III-3	
PXS-PY-C01	Nitrogen Makeup Containment Penetration	B	I	ASME III, 2~~MC~~	
Balance of system components are Class E					
Reactor Coolant System (RCS)					Location: Containment
RCS-MB-01	Steam Generator 1	A	I	ASME III-1	
RCS-MB-02	Steam Generator 2	A	I	ASME III-1	
RCS-MP-01A	SG 1 Reactor Coolant Pump	A	I	ASME III-1	
RCS-MP-01B	SG 1 Reactor Coolant Pump	A	I	ASME III-1	
RCS-MP-02A	SG 2 Reactor Coolant Pump	A	I	ASME III-1	
RCS-MP-02B	SG 2 Reactor Coolant Pump	A	I	ASME III-1	
RCS-MV-01	Reactor Vessel	A	I	ASME III-1	
RCS-MV-02	Pressurizer	A	I	ASME III-1	
RCS-MY-Y11	SG 1 Shell	B	I	ASME III-1	
RCS-MY-Y12	SG 1 Channel Head Divider Plate	B	I	ASME III-1	
RCS-MY-Y13	SG 1 Tube Bundle Support Assembly	C	I	ASME III, NG	
RCS-MY-Y14	SG 1 Steam Flow Limiting Venturi	B	I	ASME III, NG	
RCS-MY-Y15	SG 1 Feedwater Distribution Ring Supports	B	I	ASME III, NG	
RCS-MY-Y21	SG 2 Shell	B	I	ASME III-1	
RCS-MY-Y22	SG 2 Channel Head Divider Plate	B	I	ASME III-1	
RCS-MY-Y23	SG 2 Tube Bundle Support Assembly	C	I	ASME III, NG	
RCS-MY-Y24	SG 2 Steam Flow Limiting Venturi	B	I	ASME III, NG	
RCS-MY-Y25	SG 2 Feedwater Distribution Ring Supports	B	I	ASME III, NG	

NRC 044

Table 3.2-3 (Sheet 57 of 65)

AP1000 CLASSIFICATION OF MECHANICAL AND FLUID SYSTEMS, COMPONENTS, AND EQUIPMENT

Tag Number	Description	AP1000 Class	Seismic Category	Principal Construction Code	Comments
Main Control Room Emergency Habitability System (Continued)					
VES-PL-V038	Makeup Air Stop Valve	C	I	ASME III-3	
VES-PL-V040A	Air Tank Safety Relief Valve A	C	I	ASME III-3	
VES-PL-V040B	Air Tank Safety Relief Valve B	C	I	ASME III-3	
VES-PL-V041A	Air Tank Safety Relief Valve A	C	I	ASME III-3	
VES-PL-V041B	Air Tank Safety Relief Valve B	C	I	ASME III-3	
VES-PL-V043A	Differential Pressure Instrument Line Isolation Valve A	C	I	ASME III-3	
VES-PL-V043B	Differential Pressure Instrument Line Isolation Valve B	C	I	ASME III-3	
VES-PL-V044	Main Air Flowpath Isolation Valve	C	I	ASME III-3	
Containment Air Filtration System (VFS)			Location: Auxiliary Building and Annex Building		
NRC 044 VFS-PY-C01	Containment Supply Duct Penetration	B	I	ASME III, 2~~MC~~	
NRC 044 VFS-PY-C02	Containment Exhaust Duct Penetration	B	I	ASME III, 2~~MC~~	
VFS-MY-Y01	Containment Air Supply Debris Screen	C	I	ASME Sec. III Class 3	
VFS-MY-Y02	Containment Air Exhaust Debris Screen	C	I	ASME Sec. III Class 3	
VFS-PL-V001	Containment Isolation Test Connection	B	I	ASME III-2	
VFS-PL-V002	Containment Isolation Test Connection	C	I	ASME III-3	
VFS-PL-V003	Containment Purge Supply Containment Isolation Valve	B	I	ASME III-2	
VFS-PL-V004	Containment Purge Supply Containment Isolation Valve	B	I	ASME III-2	
VFS-PL-V006	Containment Isolation Test Connection	C	I	ASME III-3	

Table 3.2-3 (Sheet 62 of 65)

AP1000 CLASSIFICATION OF MECHANICAL AND FLUID SYSTEMS, COMPONENTS, AND EQUIPMENT

Tag Number	Description	AP1000 Class	Seismic Category	Principal Construction Code	Comments
Central Chilled Water System (Continued)					
NRC 044 VWS-PY-C01	Containment Chilled Water Supply Penetration	B	I	ASME III, 2~~MC~~	
NRC 044 VWS-PY-C02	Containment Chilled Water Return Penetration	B	I	ASME III, 2~~MC~~	
VWS-PL-V058	Fan Coolers Supply Containment Isolation	B	I	ASME III-2	
VWS-PL-V062	Fan Coolers Supply Containment Isolation	B	I	ASME III-2	
VWS-PL-V082	Fan Coolers Return Containment Isolation	B	I	ASME III-2	
VWS-PL-V086	Fan Coolers Return Containment Isolation	B	I	ASME III-2	
VWS-PL-V424	Containment Penetration Test Connection	B	I	ASME III-2	
VWS-PL-V425	Containment Penetration Test Connection	B	I	ASME III-2	
Balance of system components are Class E					
Annex/Auxiliary Nonradioactive Ventilation System (VXS) Location: Auxiliary Building and Annex Building					
n/a	Air Handling Unit Fans Providing AP1000 Equipment Class D Function	Note 2	NS	AMCA	
n/a	Dampers Providing VXS AP1000 Equipment Class D Function	Note 2	NS	ANSI/AMCA-500	
n/a	Exhaust Fan Providing Ancillary Diesel Room Ventilation	Note 2	NS	AMCA	
n/a	Fire Dampers	Note 3	NS	UL-555 or UL-555S	
n/a	Air Handling Units	L	NS	Manufacturer Std.	
n/a	Filters	L	NS	UL 900	
n/a	Fans, Ductwork	L	NS	SMACNA	
Balance of system components are Class E or Class L					

Table 3.2-3 (Sheet 64 of 65)

AP1000 CLASSIFICATION OF MECHANICAL AND FLUID SYSTEMS, COMPONENTS, AND EQUIPMENT

Tag Number	Description	AP1000 Class	Seismic Category	Principal Construction Code	Comments
Liquid Radwaste System (Continued)					
n/a	Ion Exchangers	D	NS	ASME VIII	
n/a	Filters	D	NS	ASME VIII	
n/a	Valves Providing WLS AP1000 Equipment Class D Function (local drain valves in Radwaste Building)	D	NS	ANSI 16.34	
WLS-PL-V055	Sump Discharge Containment Isolation IRC	B	I	ASME III-2	
WLS-PL-V057	Sump Discharge Containment Isolation ORC	B	I	ASME III-2	
WLS-PL-V067	RCDT Gas Outlet Containment Isolation IRC	B	I	ASME III-2	
WLS-PL-V068	RCDT Gas Outlet Containment Isolation ORC	B	I	ASME III-2	
WLS-PL-V071A	CVS Compartment to Sump	C	I	ASME III-3	
WLS-PL-V071B	PXS A Compartment to Sump	C	I	ASME III-3	
WLS-PL-V071C	PXS B Compartment to Sump	C	I	ASME III-3	
WLS-PL-V072A	CVS Compartment to Sump	C	I	ASME III-3	
WLS-PL-V072B	PXS A Compartment to Sump	C	I	ASME III-3	
WLS-PL-V072C	PXS B Compartment to Sump	C	I	ASME III-3	
NRC 044 WLS-PY-C02	Reactor Coolant Drain Tank WLS Connection Penetration	B	I	ASME III, 2~~MC~~	
NRC 044 WLS-PY-C03	Containment Sump Pumps Combined Discharge Penetration	B	I	ASME III, 2~~MC~~	
Balance of system components are Class E					
Radioactive Waste Drain System (WRS)					Location: Auxiliary Building
n/a	Pumps	D	NS	Manufacturer Std.	
n/a	Valves Providing WRS AP1000 Equipment Class D Function	D	NS	ANSI 16.34	

3.5.1.6 Aircraft Hazards

As described previously in Section 2.2, the site interface is established to address aircraft hazards as discussed in subsection 3.5.4. The AP1000 missile interface criteria are based on the tornado missiles described in subsection 3.5.1.4. Additional analyses are required to evaluate other site specific missiles. Aircraft crash probability and the effects of this hazard on the plant is determined as described in Section 2.2.

NRC 075

3.5.2 Protection from Externally Generated Missiles

Systems required for safe shutdown are protected from the effects of missiles. These systems are identified in Section 7.4. Protection from external missiles, including those generated by natural phenomena, is provided by the external walls and roof of the Seismic Category I nuclear island structures. The external walls and roofs are reinforced concrete. The structural design requirements for the shield building and auxiliary building are outlined in subsection 3.8.4. Openings through these walls are evaluated on a case-by-case basis to provide confidence that a missile passing through the opening would not prevent safe shutdown and would not result in an offsite release exceeding the limits defined in 10 CFR 100. The evaluation of site-specific hazards for external events that may produce missiles more energetic than tornado missiles is discussed in subsection 2.2.1.

Evaluation of turbine missiles is provided in subsection 3.5.1.3. Evaluation of tornado missiles is provided in subsection 3.5.1.4. Conformance with regulatory guide recommendations is provided in Appendix 1A.

3.5.3 Barrier Design Procedures

Missile barriers and protective structures are designed to withstand and absorb missile impact loads to prevent damage to safety-related components.

Formulae used for missile penetration calculations into steel or concrete barriers are the Modified National Defense Research Committee (NDRC) formula for concrete and either the Ballistic Research Laboratory (BRL) or Stanford formulae for steel.

Concrete (Modified NDRC Formula)

$$x = \left[4\,KNWd \left(\frac{V}{1000\,d} \right)^{1.8} \right]^{0.5} \qquad \text{for } \frac{x}{d} \le 2.0$$

$$x = KNW \left(\frac{V}{1000\,d} \right)^{1.8} + d \qquad \text{for } \frac{x}{d} > 2.0$$

where

x = penetration depth, inches
W = missile weight, lbs

NRC 168 For the design of seismic Category I structures, a set of six~~five~~ design soil profiles (that include hard rock) of various shear wave velocities is established from parametric studies as described in Appendix 3G. These six~~five~~ profiles are sufficient to envelope sites where the shear wave velocity of the supporting medium at the foundation level exceeds 1000 feet per second (see subsection 2.5.2). The design soil profiles include a hard rock site, a soft rock site, a firm rock site, an upper bound soft-to-medium soil site, a soft-to-medium soil site, and a soft soil site. The shear wave velocity profiles and related governing parameters of the six~~five~~ sites considered are as follows:

NRC 168

NRC 168

- For the hard rock site, an upper bound case for rock sites using a shear wave velocity of 8000 feet per second.
- For the firm rock site, a shear wave velocity of 3500 feet per second to a depth of 120 feet and base rock at the depth of 120 feet.
- For the soft rock site, a shear wave velocity of 2400 feet per second at the ground surface, increasing linearly to 3200 feet per second at a depth of 240 feet, and base rock at the depth of 120 feet.

NRC 168

- For the upper bound soft-to-medium soil site, a shear wave velocity of 1414 feet per second at ground surface, increasing parabolically to 3394 feet per second at 240 feet, base rock at the depth of 120 feet, and ground water at grade level. The initial soil shear modulus profile is twice that of the soft-to-medium soil site.
- For the soft-to-medium soil site, a shear wave velocity of 1000 feet per second at ground surface, increasing parabolically to 2400 feet per second at 240 feet, base rock at the depth of 120 feet, and ground water is assumed at grade level.
- For the soft soil site, a shear wave velocity of 1000 feet per second at ground surface, increasing linearly to 1200 feet per second at 240 feet, base rock at the depth of 120 feet, and ground water is assumed at grade level

The strain-dependent shear modulus curves for the foundation materials, together with the corresponding damping curves are taken from References 37 and 38 and are shown in Figures 3.7.1-15 and 3.7.1-16 for rock material and soil material respectively. The different curves for soil in Figure 3.7.1-16 apply to the range of depth within a soil column below grade. The strain-dependent soil material damping is limited to 15 percent of critical damping. The strain-dependent properties used in the SSI analyses for the safe shutdown earthquake are shown in Table 3.7.1-4 and Figure 3.7.1-17 for the firm rock, soft rock, upper bound soft-to-medium soil, soft-to-medium soil, and soft soil properties.

NRC 168

3.7.2 Seismic System Analysis

Seismic Category I structures, systems, and components are classified according to Regulatory Guide 1.29. Seismic Category I building structures of AP1000 consist of the containment building (the steel containment vessel and the containment internal structures), the shield building, and the auxiliary building. These structures are founded on a common basemat and are collectively known as the nuclear island or nuclear island structures. [*Key dimensions, such as thickness of the*

*NRC Staff approval is required prior to implementing a change in this information; see DCD Introduction Section 3.5.

Seismic systems are defined, according to SRP 3.7.2, Section II.3.a, as the seismic Category I structures that are considered in conjunction with their foundation and supporting media to form a soil-structure interaction model. The following subsections describe the seismic analyses performed for the nuclear island. Other seismic Category I structures, systems, equipment, and components not designated as seismic systems (that is, heating, ventilation, and air-conditioning systems; electrical cable trays; piping systems) are designated as seismic subsystems. The analysis of seismic subsystems is presented in subsection 3.7.3.

Seismic Category I building structures are on the nuclear island. Other building structures are classified nonseismic or seismic Category II. Nonseismic structures are analyzed and designed for seismic loads according to the Uniform Building Code (Reference 2) requirements for Zone 2A. Seismic Category II building structures are designed for the safe shutdown earthquake using the same methods and design allowables as are used for seismic Category I structures. The acceptance criteria are based on ACI 349 for concrete structures and on AISC N690 for steel structures including the supplemental requirements described in subsections 3.8.4.4.1 and 3.8.4.5. The seismic Category II building structures are constructed to the same requirements as the nonseismic building structures, ACI 318 for concrete structures and AISC-S355 for steel structures.

NRC 168 Separate seismic analyses are performed for the nuclear island for each of the six~~five~~ design soil profiles defined in subsection 3.7.1.4. The analyses generate one set of in-structure responses for
NRC 168 each of the design soil profiles. The six~~five~~ sets of in-structure responses are enveloped to obtain the seismic design envelope (design member forces, nodal accelerations, nodal displacements, and floor response spectra), which are used in the design and analysis of seismic Category I structures, components, and seismic subsystems.

Appendix 3G summarizes the types of models and analysis methods that are used in the seismic analyses of the nuclear island, as well as the type of results that are obtained and where they are used in the design. The seismic analyses of the nuclear island are summarized in a seismic analysis summary report. This report describes the development of the finite element models, the soil structure interaction and fixed base analyses, and the results thereof. ~~A separate report provides the floor response spectra for the nuclear island~~Seismic response spectra are given in Appendix 3G for the six key locations:

- Containment internal structures at reactor vessel support elevation 100.00'.
NRC 168 - Containment internal structures at operating deck elevation 134.25',
- Auxiliary shield building north east corner at control room floor elevation 116.50'.
- Auxiliary shield building corner of fuel building roof at shield building elevation 179.19'.
- Auxiliary shield building roof area elevation 327.41'.
- Steel containment vessel near polar crane elevation 224.000'.

3.7.2.1 Seismic Analysis Methods

Seismic analyses of the nuclear island are performed in conformance with the criteria within SRP 3.7.2.

Seismic analyses – using response spectra analysis the equivalent static acceleration method, the mode superposition time-history method, and the complex frequency response analysis method – are performed for the safe shutdown earthquake to determine the seismic force distribution for use

in the design of the nuclear island structures, and to develop in-structure seismic responses (accelerations, displacements, and floor response spectra) for use in the analysis and design of seismic subsystems.

3.7.2.1.1 Equivalent Static Acceleration Analysis

NRC 168

NRC 168

NRC 168

Equivalent static analyses, using computer program ANSYS (Reference 36), are performed to obtain the seismic forces and moments required only for the structural design of the ~~auxiliary building, the shield building, the~~ steel containment vessel and the nuclear island basemat (see subsection 3.8.2.4.1.1)~~, and the containment internal structures on the nuclear island~~. Equivalent static loads are applied to the finite element models using the maximum acceleration results from the time history analyses for the six~~four~~ design soil profiles. Accidental torsional moments are applied as described in subsection 3.7.2-11.

~~**Coupled Shield and Auxiliary Buildings on Fixed Base**~~

~~The analyses are performed using the three-dimensional, finite element model of the coupled shield and auxiliary buildings including the shield building roof. The effect of the containment internal structures are considered by inclusion of the shell models. The equivalent static accelerations are developed and discussed in Appendix 3G.~~

~~Equivalent static analyses are performed using the fixed-base, three-dimensional, finite element models fixed at elevation 63′ 6″. The support provided by the embedment below grade is not considered in these analyses.~~

~~**Containment Internal Structures**~~

~~Equivalent static analyses of the containment internal structures on a fixed base are performed using the three-dimensional, finite element model of the containment internal structures developed and discussed in Appendix 3G.~~

3.7.2.1.2 Time-History Analysis and Complex Frequency Response Analysis

Mode superposition time-history analyses using computer program ANSYS and complex frequency response analysis using computer program SASSI are performed to obtain the in-structure seismic response needed in the analysis and design of seismic subsystems. Three-dimensional finite element shell models of the nuclear island structures are used in conjunction with the design soil profiles presented in subsection 3.7.1.4 to obtain the in-structure responses. Stick models are coupled to the shell models of the concrete structures for the containment vessel, polar crane, reactor coolant loop, pressurizer, and core makeup tanks. Two models are used. The fine (NI10) model, as described in subsection 3G.2.2.1, is used to define the seismic response for the hard rock site. The coarse (NI20) model, as described in subsection 3G.2.2.2, is used for the soil structure interaction (SSI) analyses and is set up in both ANSYS and SASSI. The models and analyses are described in Appendix 3G.

For the hard rock site, the soil-structure interaction effect is negligible. Therefore, for the hard rock site, the nuclear island is analyzed as a fixed-base structure, using computer program ANSYS without the foundation media. The three components of earthquake (two horizontal and one vertical time histories) are applied simultaneously in the analysis. Since the NI10 finite element

model of the auxiliary and shield building uses shell elements to represent the 6-foot-thick basemat, the nodes of the basemat element are at the center of the basemat (elevation 63′-6″). The finite element model of the containment internal structures uses solid elements, which extend down to elevation 60′-6″. When the finite element models are combined and used in the time history analyses, the auxiliary building finite element model is fixed at the shell element basemat nodes (elevation 63′-6″) and the base of the containment internal structures is fixed at the bottom of the solid element base nodes (elevation 60′-6″). This difference in elevation of the base fixity is not significant since the concrete between elevations 60′-6″ and 63′-6″, below the auxiliary building, is nearly rigid. There is no lateral support due to soil or hard rock below grade. This case results in higher response than a case analyzed with full lateral support below grade.

3.7.2.1.3 Response Spectrum Analysis

NRC 168

Response spectral analysis is used~~Equivalent static acceleration and mode superposition time-history methods are primarily used~~ for the evaluation of the nuclear island structures. Response spectrum analyses is~~may be~~ used to perform an analysis of a particular structure or portion of structure using the procedures described in subsections 3.7.2.6, 3.7.2.7, and 3.7.3.

3.7.2.2 Natural Frequencies and Response Loads

NRC 168

Modal analyses are performed for the shell and lumped-mass stick models of the seismic Category I structures on the nuclear island, as described in Appendix 3G. Seismic response spectra at the six key locations (subsection 3.7.2) are given in~~Typical results are shown in~~ Appendix 3G.

3.7.2.3 Procedure Used for Modeling

Based on the general plant arrangement, three-dimensional, finite element models are developed for the nuclear island structures: a finite element model of the coupled shield and auxiliary buildings, a finite element model of the containment internal structures, a finite element model of the shield building roof, and an axisymmetric shell model of the steel containment vessel. These three-dimensional, finite element models provide the basis for the development of the dynamic model of the nuclear island structures.

The finite element models of the coupled shield and auxiliary buildings, and the containment internal structures are based on the gross concrete section with the modulus based on the specified compressive strength of concrete reduced by a factor of 0.8 to consider the effect of cracking as recommended in Table 6-5 of FEMA 356 (Reference 5).

Seismic subsystems coupled to the overall dynamic model of the nuclear island include the coupling of the reactor coolant loop model to the model of the containment internal structures, and the coupling of the polar crane model to the model of the steel containment vessel. The criteria used for decoupling seismic subsystems from the nuclear island model are according to Section II.3.b of SRP 3.7.2, Revision 2. The total mass of other major subsystems and equipment is less than one percent of the respective supporting nuclear island structures; therefore, the mass of other major subsystems and equipment is included as concentrated lumped-mass only.

The floor response spectra for the design of subsystems and components are generated by broadening the enveloped nodal response spectra determined for the hard rock site and soil sites.

The spectral peaks are broadened by ±15 percent to account for the variation in the structural frequencies, due to the uncertainties in parameters such as material and mass properties of the structure and soil, damping values, seismic analysis technique, and the seismic modeling technique. Figure 3.7.2-14 shows the broadening procedure used to generate the design floor response spectra. Spectral peaks at frequencies associated with fundamental soil structure interaction frequencies are reviewed. If there is a "valley" between peaks due to~~associated with~~ different soil profiles and not the building modal response, then this valley is filled by extending the broadening of the lower peak horizontally until it meets the broadened upper peak.

NRC 168

Floor response spectra for the auxiliary building are obtained from the three-dimensional model as described in Appendix 3G. These spectra are developed for the specific location in the auxiliary building. Where spectra at a number of nodes have similar characteristics, a single set of spectra may be developed by enveloping the broadened spectra at each of the nodes.

The safe shutdown earthquake floor response spectra for 5 percent damping, at representative locations of the coupled auxiliary and shield buildings, the steel containment vessel, and the containment internal structures are presented in Appendix 3G.

3.7.2.6 Three Components of Earthquake Motion

Seismic system analyses are performed considering the simultaneous occurrences of the two horizontal and the vertical components of earthquake.

In mode superposition time-history analyses using computer program ANSYS, the three components of earthquake are applied either simultaneously or separately. In the ANSYS analyses with the three earthquake components applied simultaneously, the effect of the three components of earthquake motion is included within the analytical procedure so that further combination is not necessary.

In analyses with the earthquake components applied separately and in the response spectrum and equivalent static analyses, the effect of the three components of earthquake motion are combined using one of the following methods:

- For seismic analyses with the statistically independent earthquake components applied separately, the time-history responses from the three earthquake components are combined algebraically at each time step to obtain the combined response time-history. This method is used in the SASSI analyses.

- The peak responses due to the three earthquake components from the response spectrum and equivalent static analyses are combined using the square root of the sum of squares (SRSS) method.

- The peak responses due to the three earthquake components are combined directly, using the assumption that when the peak response from one component occurs, the responses from the other two components are 40 percent of the peak (100 percent-40 percent-40 percent

- The structure is classified as seismic Category II and is analyzed and designed to prevent its collapse under the safe shutdown earthquake.

The structures adjacent to the nuclear island are the annex building, the radwaste building, and the turbine building.

3.7.2.8.1 Annex Building

NRC 168

The portion of the annex building adjacent to the nuclear island is classified as seismic Category II. The structural configuration is shown in Figure 3.7.2-19. The annex building is analyzed for the safe shutdown earthquake for the six~~five~~ soil profiles described in subsection 3.7.1.4. For the hard rock site, a range of soil properties is assumed for the layer above rock at the level of the nuclear island foundation. Seismic input is defined by response spectra applied at the base of a dynamic model of the annex building. The horizontal spectra are obtained from the 2D SASSI analyses and account for soil-structure and structure-soil-structure interaction. Input in the east-west direction uses the response spectra obtained from the two dimensional analyses for the annex building mat. Input in the north-south direction uses the response spectra obtained from the two dimensional analyses for the turbine building mat. Vertical input is obtained from 2D SASSI finite element soil-structure interaction analyses. The seismic response spectra input at the base of the annex building are the envelopes of the range of soil sites and also envelope the AP1000 design free field ground spectra shown in Figures 3.7.1-1 and 3.7-1-2. The envelope of the maximum building response acceleration values is applied as equivalent static loads to a more detailed static model.

The minimum space required between the annex building and the nuclear island to avoid contact is obtained by absolute summation of the deflections of each structure obtained from either a time history or a response spectrum analysis for each structure. The maximum displacement of the roof of the annex building is 1.6 inches in the east-west direction. The minimum clearance between the structural elements of the annex building above grade and the nuclear island is 4 inches.

3.7.2.8.2 Radwaste Building

The radwaste building is classified as nonseismic and is designed to the seismic requirements of the Uniform Building Code, Zone 2A with an Importance Factor of 1.25. As shown in the radwaste building general arrangement in Figure 1.2-22, it is a small steel framed building. If it were to impact the nuclear island or collapse in the safe shutdown earthquake, it would not impair the integrity of the reinforced concrete nuclear island. The minimum clearance between the structural elements of the radwaste building above grade and the nuclear island is 4 inches.

Three methods are used to demonstrate that a potential radwaste building impact on the nuclear island during a seismic event will not impair its structural integrity:

- The maximum kinetic energy of the impact during a seismic event considers the maximum radwaste building and nuclear island velocities. The total kinetic energy is considered to be absorbed by the nuclear island and converted to strain energy. The deflection of the nuclear island is less than 0.2″. The shear forces in the nuclear island walls are less than the ultimate shear strength based on a minus one standard deviation of test data.

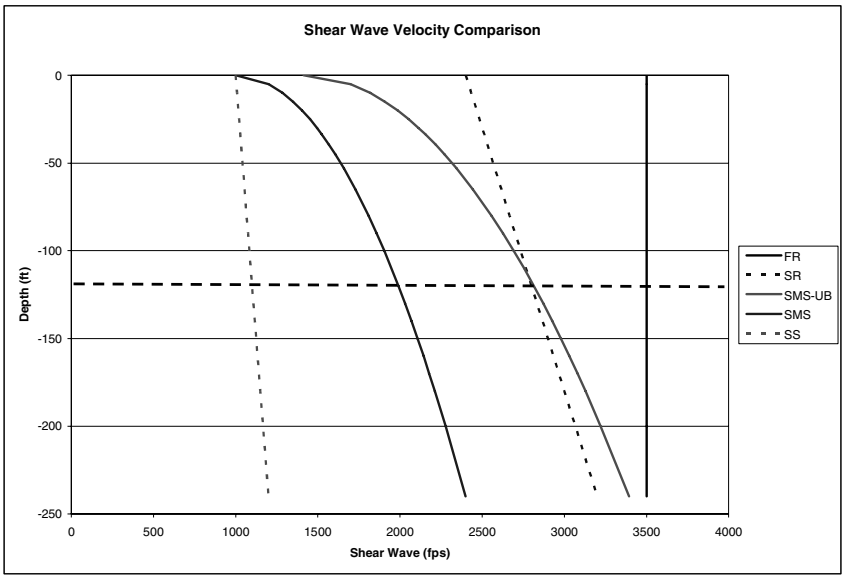

Initial Properties

NRC 168

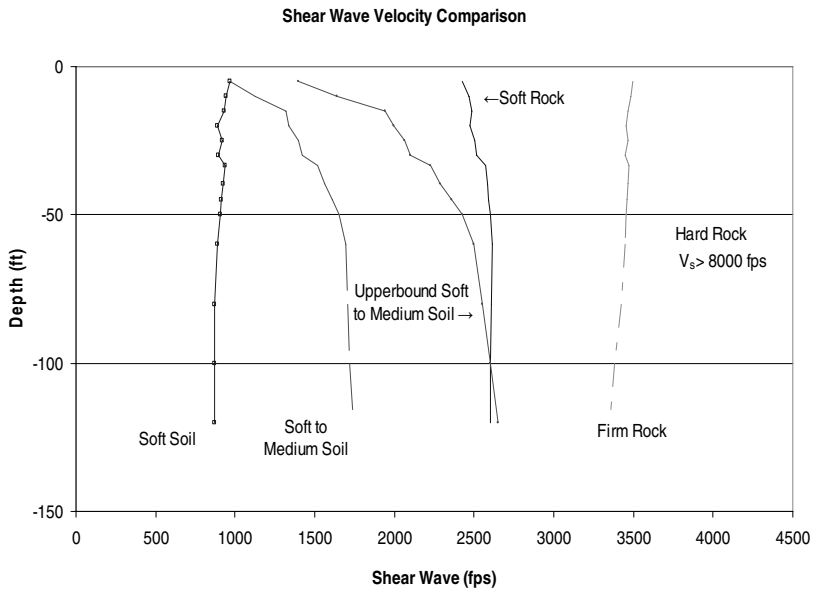

Strain-Iterated Shear Wave Velocity Profiles

Note: Fixed base analyses were performed for hard rock sites. These analyses are applicable for shear wave velocity greater than 8000 feet per second.

Figure 3.7.1-17

Generic Soil Profiles

of the doors within the lock. The airlocks extend radially out from the containment vessel through the shield building. They are supported by the containment vessel.

Each airlock has two double-gasketed, pressure-seated doors in series. The doors are mechanically interlocked to prevent simultaneous opening of both doors and to allow one door to be completely closed before the second door can be opened. The interlock can be bypassed by using special tools and procedures.

3.8.2.1.5 Mechanical Penetrations

NRC 057

The mechanical penetrations consist of the fuel transfer penetration and mechanical piping penetrations and are listed in Table 6.2.3-14.

Figure 3.8.2-4, sheet 1, shows typical details for the main steam penetration. This includes bellows to minimize piping loads applied to the containment vessel and a guardpipe to protect the bellows and to prevent overpressurization of the containment annulus in a postulated pipe rupture event. Similar details are used for the feedwater penetration.

Figure 3.8.2-4, sheet 2, shows typical details for the startup feedwater penetration. This includes a guardpipe to prevent overpressurization of the containment annulus in a postulated pipe rupture event. Similar details are used for the steam generator blowdown penetration.

Figure 3.8.2-4, sheet 3, shows typical details for the normal residual heat removal penetration. Similar details are used for other penetrations below elevation 107′-2″ where there is concrete inside the containment vessel. The flued head is integral with the process piping and is welded to the containment sleeve. The welds are accessible for in-service inspection. The containment sleeve is separated from the concrete by compressible material.

Figure 3.8.2-4, sheet 4 shows typical details for the other mechanical penetrations. These consist of a sleeve welded to containment with either a flued head welded to the sleeve (detail A), or with the process piping welded directly to the sleeve (detail B). Flued heads are used for stainless piping greater than 2 inches in nominal diameter and for piping with high operating temperatures.

Design requirements for the mechanical penetrations are as follows:

- Design and construction of the process piping follow ASME, Section III, Subsection NC. Design and construction of the remaining portions follow ASME Code, Section III, Subsection NE. The boundary of jurisdiction is according to ASME Code, Section III, Subsection NE.

- Penetrations are designed to maintain containment integrity under design basis accident conditions, including pressure, temperature, and radiation.

- Guard pipes are designed for pipe ruptures as described in subsection 3.6.2.1.1.4.

- Bellows are stainless steel or nickel alloy and are designed to accommodate axial and lateral displacements between the piping and the containment vessel. These displacements include

thermal growth of the main steam and feedwater piping during plant operation, relative seismic movements, and containment accident and testing conditions. Cover plates are provided to protect the bellows from foreign objects during construction and operation. These cover plates are removable to permit in-service inspection.

The fuel transfer penetration, shown in Figure 3.8.2-4, sheet 5, is provided to transfer fuel between the containment and the fuel handling area of the auxiliary building. The fuel transfer tube is welded to the penetration sleeve. The containment boundary is a double-gasketed blind flange at the refueling canal end. The expansion bellows are not a part of the containment boundary. Rather, they are water seals during refueling operations and accommodate differential movement between the containment vessel, containment internal structures, and the auxiliary building.

3.8.2.1.6 Electrical Penetrations

NRC 097 Figure 3.8.2-4, sheet 6, shows a typical 12-inch-diameter electrical penetration. The penetration assemblies consist of conductor~~three~~ modules (or medium voltage cable~~six~~ modules in a similar 18-inch-diameter penetration) passing through a bulkhead attached to the containment nozzle.

NRC 058 Electrical design of these penetrations is described in subsection 8.3.1.1.6~~5~~.

Electrical penetrations are designed to maintain containment integrity under design basis accident conditions, including pressure, temperature, and radiation. Double barriers permit testing of each assembly to verify that containment integrity is maintained. Design and testing is according to IEEE Standard 317-83 and IEEE Standard 323-74.

3.8.2.2 Applicable Codes, Standards, and Specifications

[*The containment vessel is designed and constructed according to the 2001 edition of the ASME Code, Section III, Subsection NE, Metal Containment, including the 2002 Addenda. Stability of the containment vessel and appurtenances is evaluated using ASME Code, Case N-284-1, Metal Containment Shell Buckling Design Methods, Class MC, Section III, Division 1, as published in the 2001 Code Cases, 2001 Edition, July 1, 2001.*]*

Structural steel nonpressure parts, such as ladders, walkways, and handrails are designed to the requirements for steel structures defined in subsection 3.8.4.

Section 1.9 discusses compliance with the Regulatory Guides and the Standard Review Plans.

3.8.2.3 Loads and Load Combinations

Table 3.8.2-1 summarizes the design loads, load combinations and ASME Service Levels. They meet the requirements of the ASME Code, Section III, Subsection NE. The containment vessel is designed for the following loads specified during construction, test, normal plant operation and shutdown, and during accident conditions:

D Dead loads or their related internal moments and forces, including any permanent piping and equipment loads

*NRC Staff approval is required prior to implementing a change in this information; see DCD Introduction Section 3.5.

3.8.2.4.2.4 Personnel Airlocks

The capacity of the personnel airlocks was determined by comparing the airlock design to that tested and reported in NUREG/CR-5118 (Reference 3). Critical parameters are the same, so the results of the test apply directly. In the tests the inner door and end bulkhead of the airlock withstood a maximum pressure of 300 psig at 400°F. The capacity of the airlock is therefore at least 300 psig at ambient temperature. The maximum pressure corresponding to Service Level C is conservatively estimated by reducing this capacity in the ratio of the minimum specified material yield to ultimate.

3.8.2.4.2.5 Mechanical and Electrical Penetrations

Subsections 3.8.2.1.3 through 3.8.2.1.6 describe the containment penetrations. Penetration reinforcement is designed following the area replacement method of the ASME Code. The insert plates and sleeves permit development of the hoop tensile yield stresses predicted as the limiting capacity in subsection 3.8.2.4.1. Capacities of the equipment hatch covers are discussed in subsection 3.8.2.4.2.3 and of the personnel airlocks in subsection 3.8.2.4.2.4.

Mechanical penetrations welded directly to the containment vessel are generally piping systems with design pressures greater than that of the containment vessel. Thicknesses of the flued head or end plate are established based on piping support loads or stiffness requirements. The capacities of these penetrations are greater than the capacity of the containment vessel cylinder.

Mechanical penetrations for the large-diameter high-energy lines, such as the main steam and feedwater piping, include expansion bellows. The piping and flued head have large pressure capability. The response of expansion bellows to severe pressure and deformations is described in NUREG/CR-5561 (Reference 4). The bellows can withstand large pressure loading but may tear once the containment vessel deflection becomes large. Testing reported in NUREG/CR-6154 (Reference 26) has shown that the bellows remain leaktight even when subjected to large deflections sufficient to fully compress the bellows. Such large deflections do not occur as long as the containment vessel remains elastic. As described in subsection 3.8.2.4.2.6, the radial deflection of the shell increases substantially once the containment cylinder yields. The resulting deflections are assumed to cause loss of containment function. The containment penetration bellows are designed for a pressure of 90 psig at design temperature within Service Level C limits, concurrent with the relative displacements imposed on the bellows when the containment vessel is pressurized to these magnitudes.

NRC 097

Electrical penetrations have a pressure boundary consisting of the sleeve and an end plate containing a series of modules. The electrical pressure boundary is designed and built to the requirements of the ASME Code, Section III, Class MC, Subsection NE. The pressure capacity of these elements is large and is greater than the capacity of the containment vessel cylinder at temperatures up to the containment design temperature. Electrical penetration assemblies are also designed to satisfy ASME Service Level C stress limits under a pressure of 90 psig at design temperature. Tests at pressures and temperatures representative of severe accident conditions are described in NUREG/CR-5334 (Reference 5), where typical nuclear industry~~the Westinghouse~~ penetrations were irradiated, aged, then tested. One design was tested to 13~~7~~5 psia at 7400°F. Other electrical penetration assemblies were tested to 75 psia at 400°F and 155 psia at 361°F~~higher pressures and temperatures~~. These tests showed that the electrical penetration

NRC 097

The deterministic severe accident pressure that can be accommodated according to the ASME Service Level C stress intensity limits and using a factor of safety of 1.67 for buckling of the top head is determined by the capacity of the 16-foot-diameter equipment hatch cover and the ellipsoidal head. The maximum capacity of the hatch cover, calculated according to ASME paragraph NE-3222, Service Level C, is 84 psig at an ambient temperature of 100°F and 81 psig at 300°F. When calculated in accordance with ASME Code, Case N-284, Service Level C, the maximum capacity is 126 psig at an ambient temperature of 100°F and 121 psig at 300°F. The maximum capacity of the ellipsoidal head is 104 psig at 100°F and 91 psig at 300°F.

The maximum pressure that can be accommodated according to the ASME Service Level C stress intensity limits, excluding evaluation of instability, is determined by yield of the cylinder and is 135 psig at an ambient temperature of 100°F and 117 psig at 300°F. This limit is used in the evaluations required by 10 CFR 50.34(f).

3.8.2.5 Structural Criteria

The containment vessel is designed, fabricated, installed, and tested according to the ASME Code, Section III, Subsection NE, and will receive a code stamp.

Stress intensity limits are according to ASME Code, Section III, Paragraph NE-3221 and Table NE-3221-1. [*Critical buckling stresses are checked according to the provisions of ASME Code, Section III, Paragraph NE-3222, or ASME Code Case N-284.*]*

3.8.2.6 Materials, Quality Control, and Special Construction Techniques

Materials for the containment vessel, including the equipment hatches, personnel locks, penetrations, attachments, and appurtenances meet the requirements of NE-2000 of the ASME Code. The basic containment material is SA738, Grade B, plate. The procurement specification for the SA738, grade B, plate includes supplemental requirements S1, Vacuum Treatment and S20, Maximum Carbon Equivalent for Weldability. This material has been selected to satisfy the
NRC 093 lowest service metal temperature requirement of -1~~8.~~5°F. This temperature is established by analysis for the portion of the vessel exposed to the environment when the minimum ambient air temperature is -40°F. Impact test requirements are as specified in NE-2000.

The containment vessel is coated with an inorganic zinc coating, except for those portions fully embedded in concrete. The inside of the vessel below the operating floor and up to 8 feet above the operating floor also has a phenolic top coat. Below elevation 100′ the vessel is fully embedded in concrete with the exception of the few penetrations at low elevations (see Figure 3.8.2-4, sheet 3 of 6, for typical details). Embedding the steel vessel in concrete protects the steel from corrosion.

The AP1000 configuration is shown in the general arrangement figures in Section 1.2 and in Figure 3.8.2-1. The exterior of the vessel is embedded at elevation 100′ and concrete is placed against the inside of the vessel up to the maintenance floor at elevation 107′-2″. Above this elevation the inside and outside of the containment vessel are accessible for inspection of the coating. The vessel is coated with an inorganic zinc primer to a level just below the concrete.

*NRC Staff approval is required prior to implementing a change in this information; see DCD Introduction Section 3.5.

NRC 059

N = Loads generated by the probable maximum precipitation (provided previously in Table 2.~~0~~-1).

3.8.4.3.1.4 Abnormal Loads

Abnormal loads are those loads generated by a postulated high-energy pipe break accident for pipes not qualified for leak-before-break. Abnormal loads include the following:

P_a = Pressure load within or across a compartment generated by the postulated break. The main steam isolation valve (MSIV) and steam generator blowdown valve compartments are designed for a pressurization load of 6 psi. The subcompartment design pressure bounds the pressurization effects due to postulated breaks in high energy pipe. Determination of subcompartment pressure loads is discussed in subsection 6.2.1.2.

T_a = Thermal loads under thermal conditions generated by the postulated break and including T_o. Determination of subcompartment temperatures is discussed in subsection 6.2.1.2.

R_a = Piping and equipment reactions under thermal conditions generated by the postulated break and including R_o. Determination of pipe reactions generated by postulated breaks is discussed in subsection 3.6.

Y_r = Load on the structure generated by the reaction on the broken high-energy pipe during the postulated break. Determination of the loads is discussed in Section 3.6.

Y_j = Jet impingement load on the structure generated by the postulated break. Determination of the loads is discussed in Section 3.6.

Y_m = Missile impact load on the structure generated by or during the postulated break, as from pipe whipping. Determination of the loads is discussed in Section 3.6.

3.8.4.3.1.5 Dynamic Effects of Abnormal Loads

The dynamic effects from the impulsive and impactive loads caused by P_a, R_a, Y_r, Y_j, Y_m, and tornado missiles are considered by one of the following methods:

- Applying an appropriate dynamic load factor to the peak value of the transient load
- Using impulse, momentum, and energy balance techniques
- Performing a time-history dynamic analysis

Elastoplastic behavior may be assumed with appropriate ductility ratios, provided excessive deflections will not result in loss of function of any safety-related system.

Dynamic increase factors appropriate for the strain rates involved may be applied to static material strengths of steel and concrete for purposes of determining section strength.

F_D = maximum dynamic lateral force, including dynamic active earth pressures
F_H = maximum lateral force due to all loads except seismic loads

The sliding resistance is based on the friction force developed between the basemat and the foundation. The governing friction value in the interface zone is a thin soil layer below the mudmat with an angle of internal friction of 35° giving a coefficient of friction of 0.70. The effect of buoyancy due to the water table is included in calculating the sliding resistance.

3.8.5.5.4 Overturning

The factor of safety against overturning of the nuclear island during a tornado or a design wind is shown in Table 3.8.5-2 and is calculated as follows:

$$F.S. = \frac{M_R}{M_O}$$

where:

F.S. = factor of safety against overturning from tornado or design wind
M_R = resisting moment
M_O = overturning moment of tornado or design wind

The factor of safety against overturning of the nuclear island during a safe shutdown earthquake is shown in Table 3.8.5-2 and is evaluated using the static moment balance approach assuming overturning about the edge of the nuclear island at the bottom of the basemat. The factor of safety is defined as follows:

NRC 134

$$\underline{F.S. = (M_R + M_P)/(M_O + M_{AO})}\ \cancel{F.S. = \frac{M_R}{M_O}}$$

where:

F.S. = factor of safety against overturning from a safe shutdown earthquake
M_R = nuclear island's resisting moment against overturning
M_O = maximum safe shutdown earthquake induced overturning moment acting on the nuclear island, applied as a static moment

NRC 134

$\underline{M_P}$ = <u>Resistance moment associated with passive pressure</u>
$\underline{M_{AO}}$ = <u>Moment due to lateral forces caused by active and overburden pressures</u>

The resisting moment is equal to the nuclear island dead weight, minus buoyant force from ground water table, multiplied by the distance from the edge of the nuclear island to its center of gravity. The overturning moment is the maximum moment about the same edge considering all of the soil cases including hard rock.

Table 3.8.2-1

LOAD COMBINATIONS AND SERVICE LIMITS FOR CONTAINMENT VESSEL

Load Description		Load Combination and Service Limit											
		Con	**Test**	**Des.**	**Des.**	**A**	**A**	**A**	**C**	**D**	**C**	**D**	**D**
Dead	D	x	x	x	x	x	x	x	x	x	x	x	x
Live	L	x	x	x	x	x	x	x	x	x	x	x	x
Wind	W	x				x							
Safe shutdown earthquake	E_s								x	x		x	x
Tornado	W_t										x		
Test pressure	P_t		x										
Test temperature	T_t		x										
Operating pressure	P_o										x		
Design pressure	P_d			x			x		x			x	
External pressure (2.9 psid)	P_e				x			x		x			
External pressure (0.9 psid)(3)	$\underline{P_e}$					x							x
Normal reaction	R_o				x	x		x		x	x		
Normal thermal	T_o				(4)	(5)		(4)		(4)	(4)		(5)
Accident thermal reactions	R_a			x			x		x			x	
Accident thermal	T_a			x			x		x			x	
Accident pipe reactions	Y_r											x	
Jet impingement	Y_j											x	
Pipe impact	Y_m											x	

NRC 056

Notes:

1. Service limit levels are per ASME-NE.
2. Where any load reduces the effects of other loads, that load is to be taken as zero, unless it can be demonstrated that the load is always present or occurs simultaneously with the other loads.
3. Reduced pressure of 0.9 psid at one hour in loss of all AC transient in cold weather.
4. Temperature of vessel is 70°F.
5. Temperature distribution for loss of all AC in cold weather.

NRC 134

Table 3.8.5-2

FACTORS OF SAFETY FOR FLOTATION, OVERTURNING AND SLIDING OF NUCLEAR ISLAND STRUCTURES

~~**HARD ROCK CONDITION**~~

Environmental Effect	Factor of Safety[(1)]
Flotation	
High Ground Water Table	3.7
Design Basis Flood	3.5
Sliding	
Design Wind, North-South	23.2
Design Wind, East-West	17.4
Design Basis Tornado, North-South	12.8
Design Basis Tornado, East-West	10.6
Safe Shutdown Earthquake, North-South	1.28[(2)]
Safe Shutdown Earthquake, East-West	1.34[(2)]
Overturning	
Design Wind, North-South	51.5
Design Wind, East-West	27.9
Design Basis Tornado, North-South	17.7
Design Basis Tornado, East-West	9.6
Safe Shutdown Earthquake, North-South	1.39
Safe Shutdown Earthquake, East-West	1.07[(3)]

Note:

1. Factor of safety is calculated for the soil and rock sites described in subsection 3.7.1.4. Minimum value for all sites is shown in this table.
2. Factor of safety is shown for soils below and adjacent to nuclear island having angle of internal friction of 35 degrees.

NRC 134

NRC 134

3. ~~The factor of safety of 1.07 does not consider active and passive soil pressures on the external walls below grade. When these soil pressures are considered for overturning (as they are in the sliding evaluation), the minimum factor of safety against overturning increases to 1.12. This factor of safety meets the requirement of 1.1 based on the conservative moment balance formula treating the seismic moment as static loads.~~ ASCE/SEI 43-05, Reference 46, recognizes that there is considerable margin beyond that given by the moment balance formula and permits a nonlinear rocking analysis. The nonlinear (liftoff allowed) time history analysis described in Appendix 3G~~.6~~ showed that the nuclear island basemat uplift effect is insignificant. Further, these analyses were performed for free field seismic ZPA input as high as 0.5g without significant uplift. Therefore the factor of safety against overturning is greater than 1.67 (0.5g/0.3g).

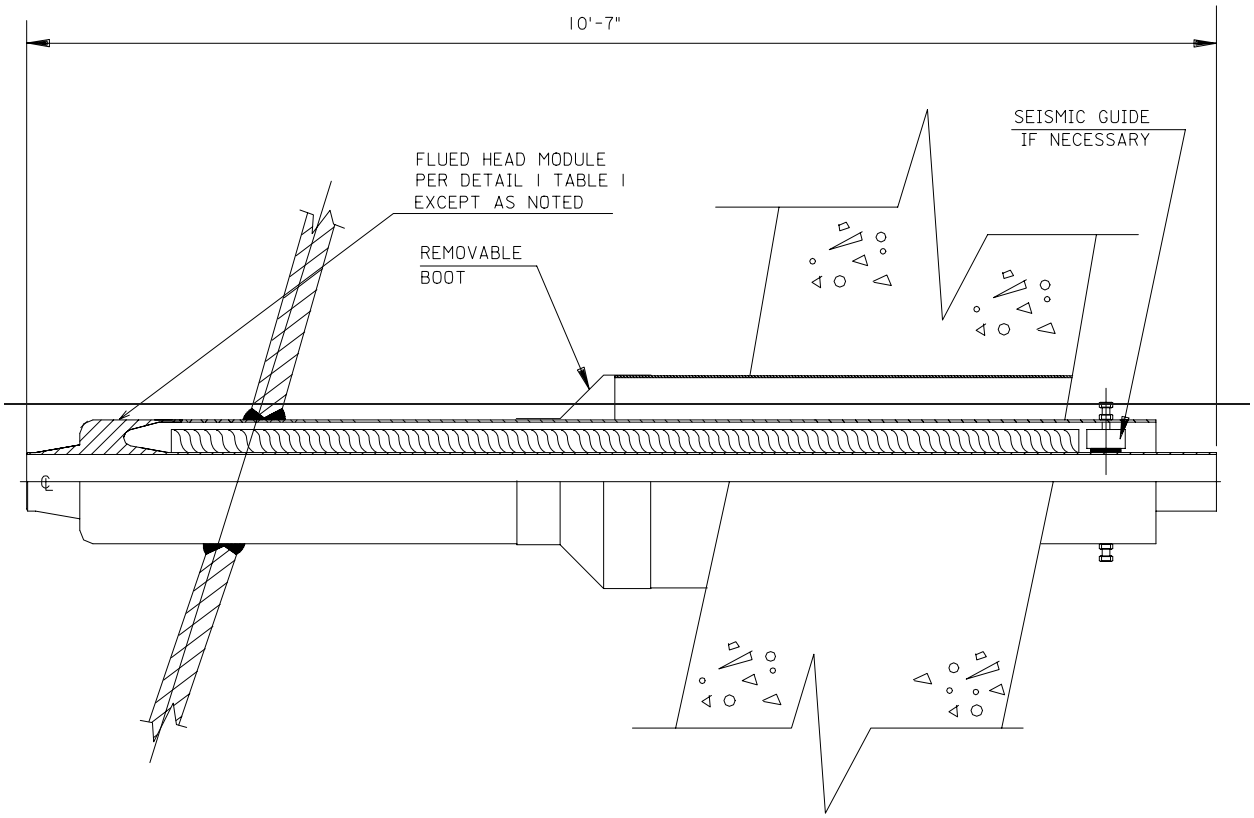
10'-7"
SEISMIC GUIDE
IF NECESSARY
FLUED HEAD MODULE
PER DETAIL 1 TABLE 1
EXCEPT AS NOTED
REMOVABLE
BOOT
℄

NRC 044

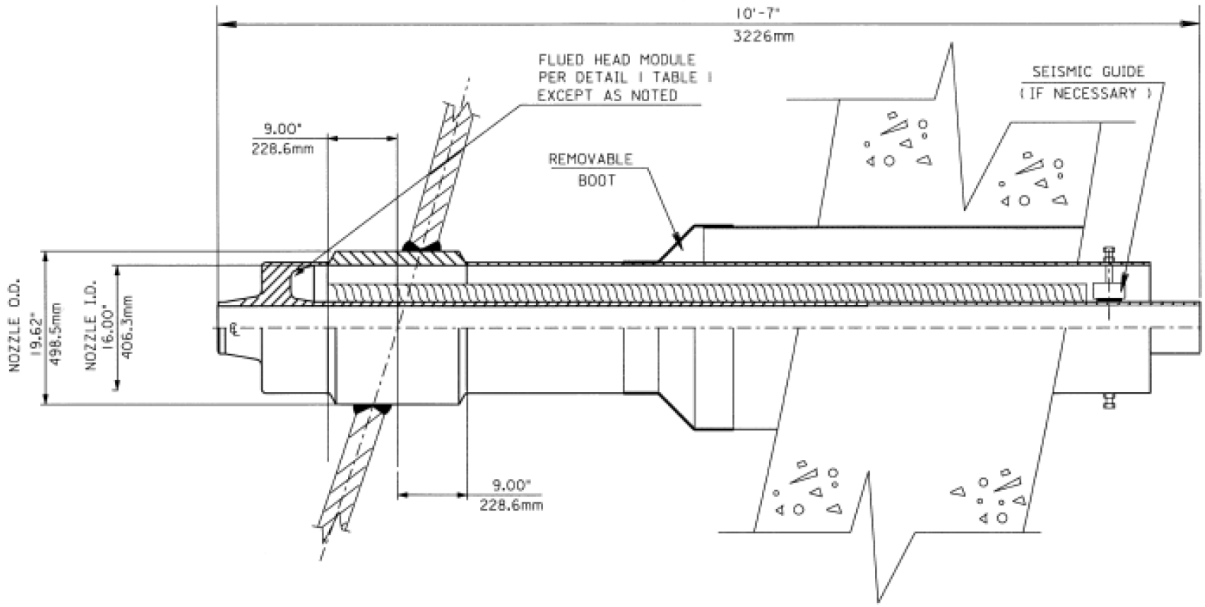

Figure 3.8.2-4 (Sheet 2 of 6)

Containment Penetrations Startup Feedwater

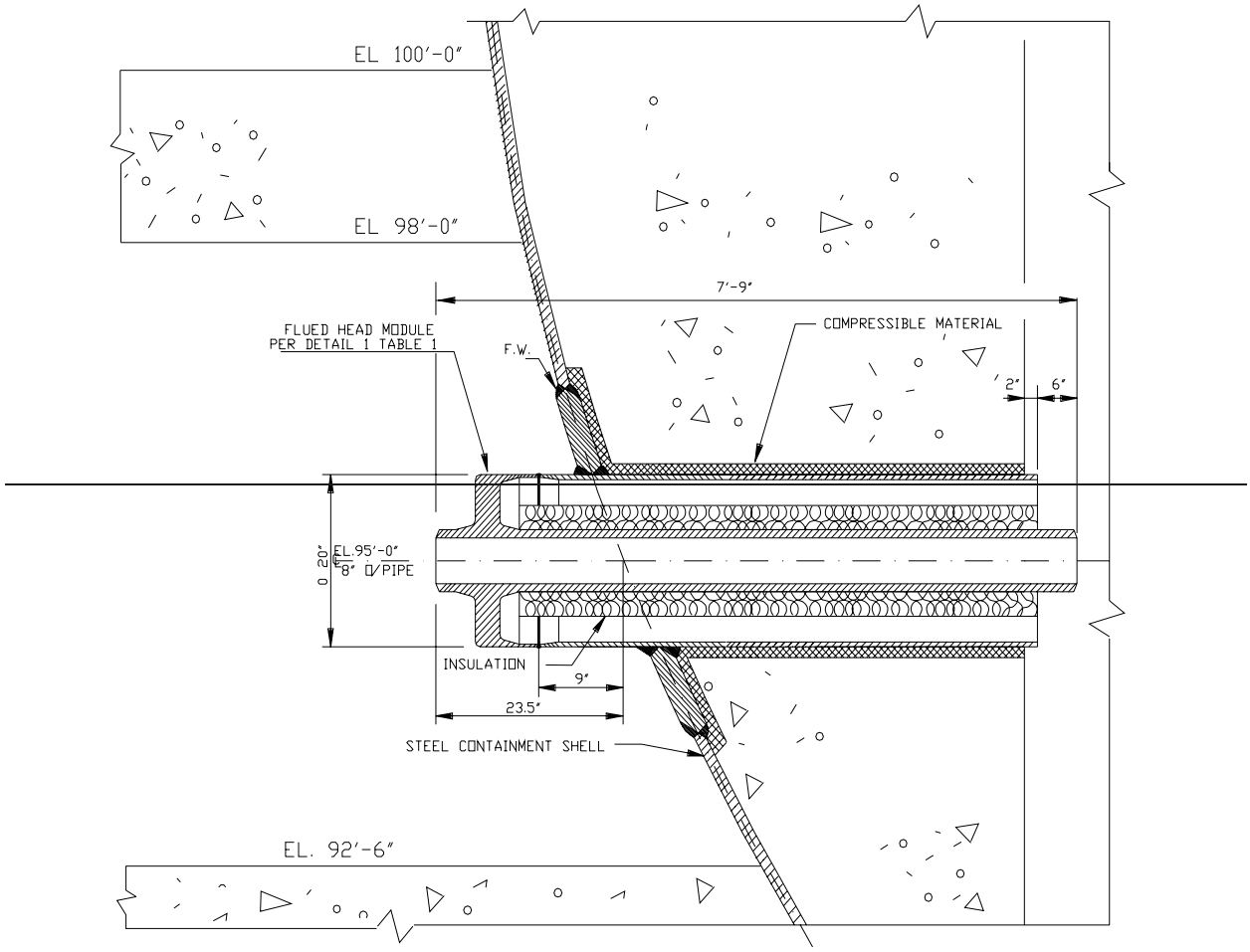
EL 100'-0"
EL 98'-0"
7'-9"
FLUED HEAD MODULE
PER DETAIL 1 TABLE 1
F.W.
COMPRESSIBLE MATERIAL
2"
6"
0.20"
EL.95'-0"
8" Ø/PIPE
INSULATION
9"
23.5"
STEEL CONTAINMENT SHELL
EL. 92'-6"

NRC 044

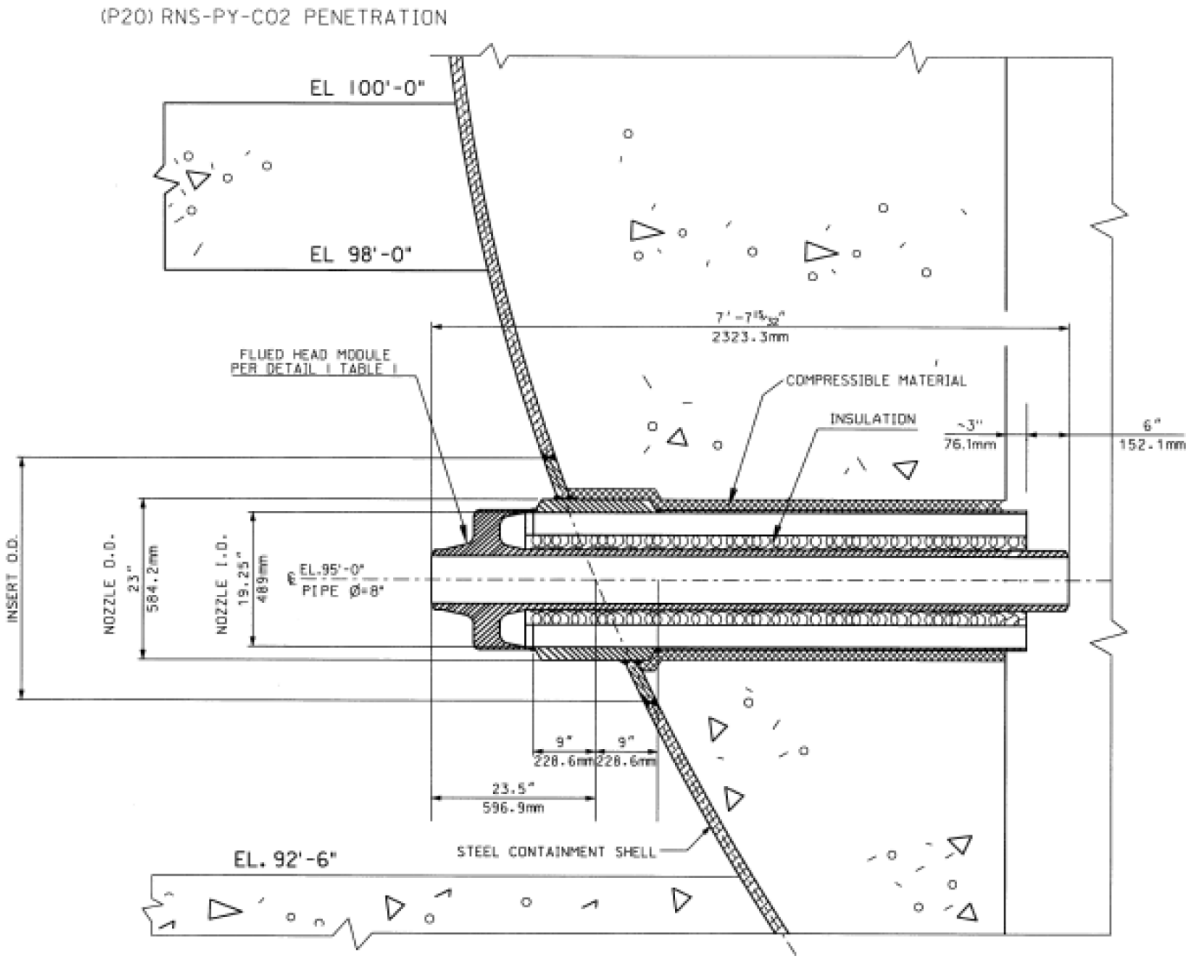

Figure 3.8.2-4 (Sheet 3 of 6)

Containment Penetrations Normal RHR Piping

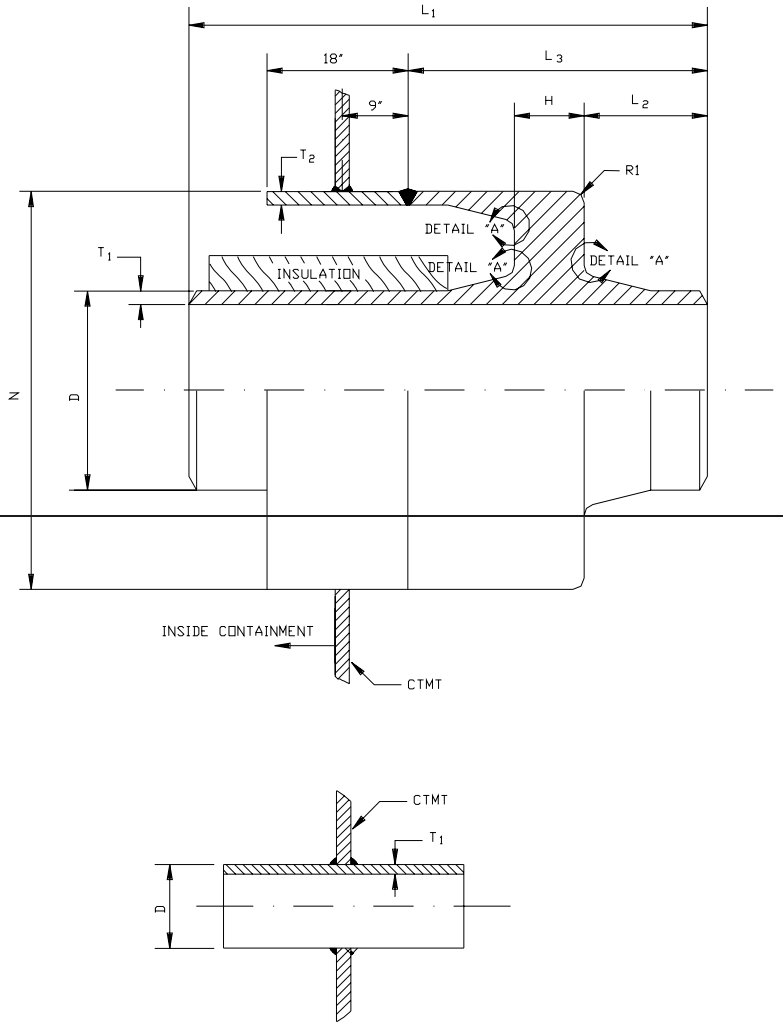
L1
18"
L3
9"
H
L2
T2
R1
DETAIL "A"
T1
INSULATION
DETAIL "A"
DETAIL "A"
N
D
INSIDE CONTAINMENT
CTMT
CTMT
T1
D

NRC 044

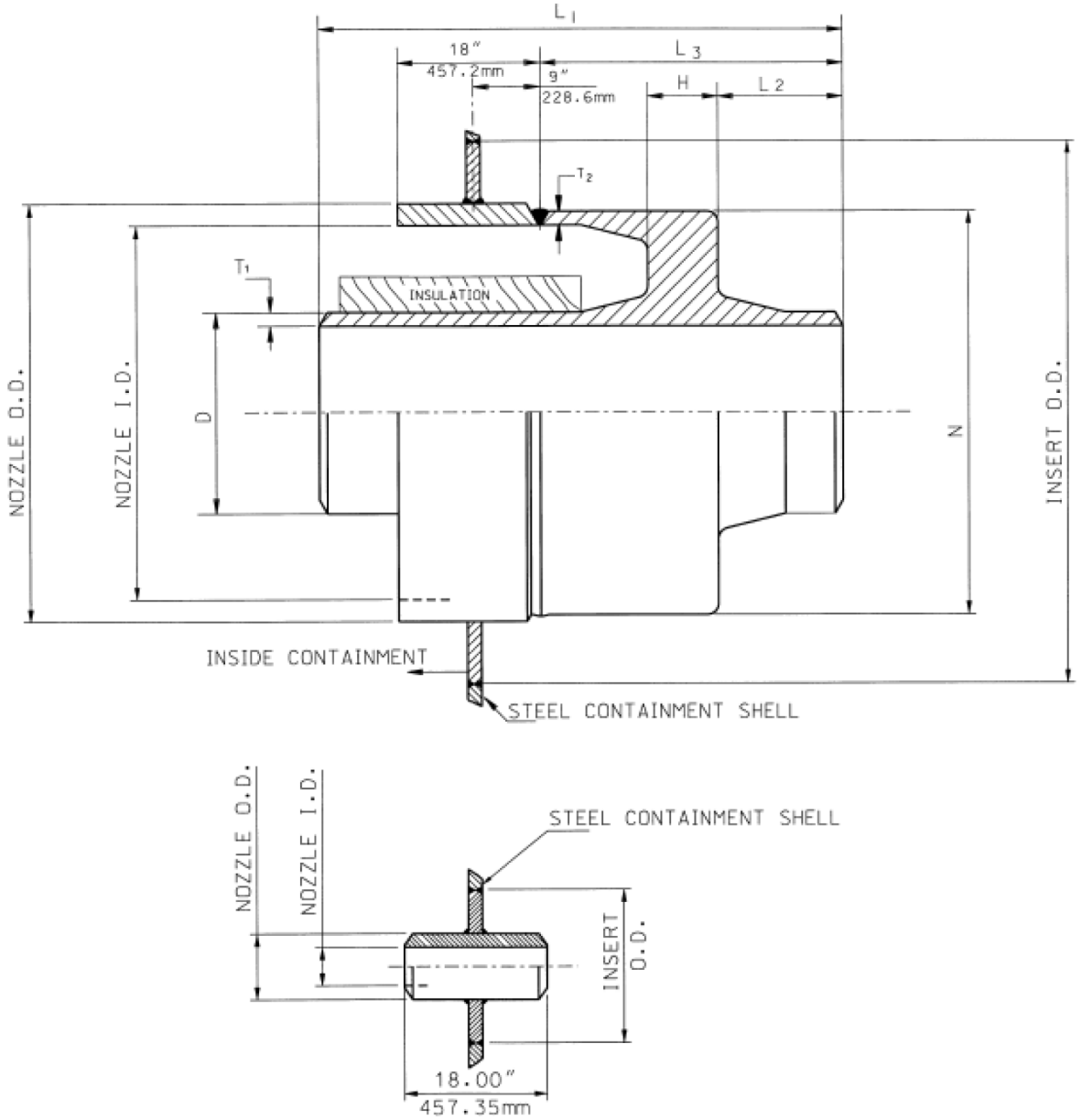

Figure 3.8.2-4 (Sheet 4 of 6)

Containment Penetrations

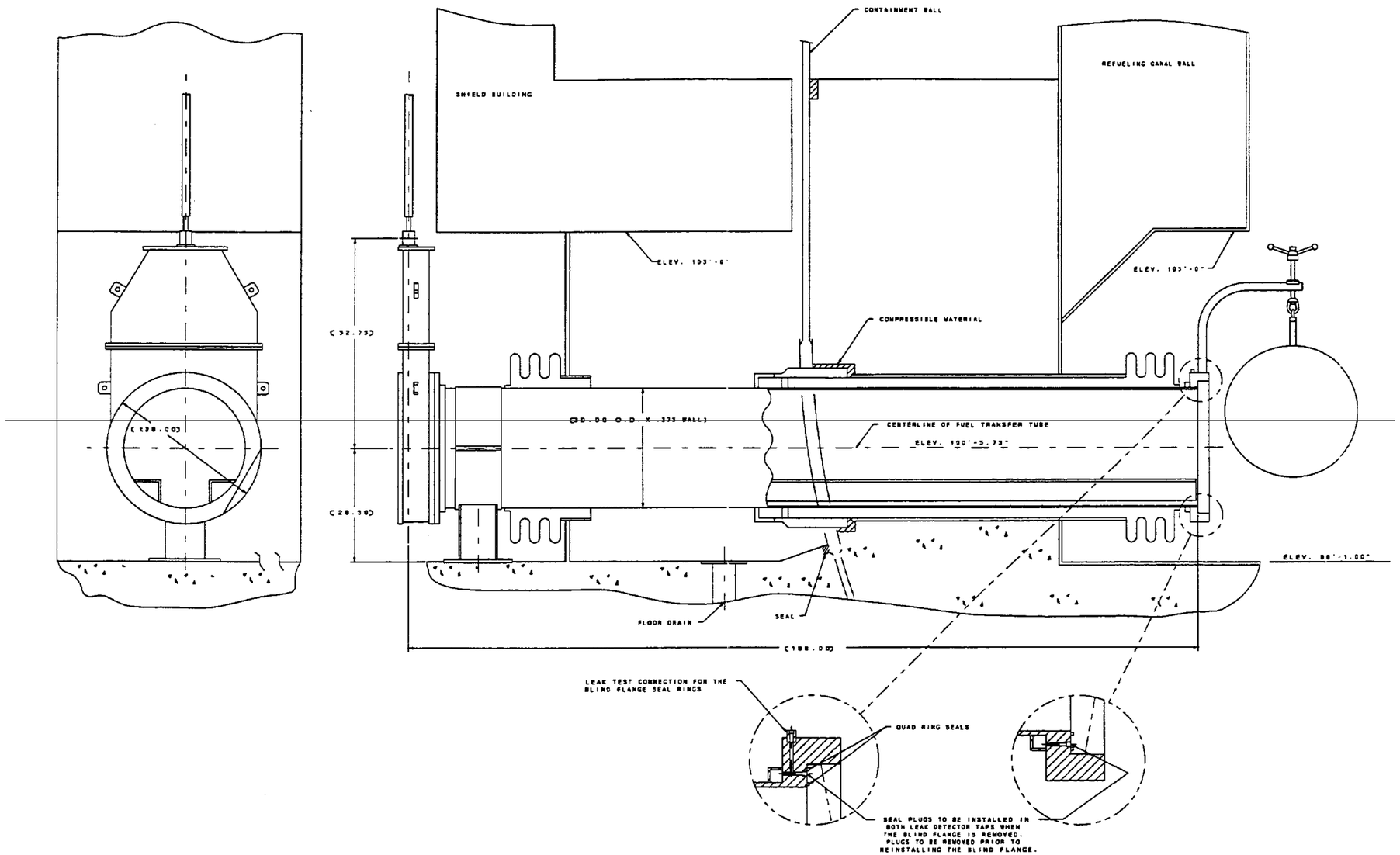
CONTAINMENT BALL
REFUELING CANAL BALL
SHIELD BUILDING
ELEV. 103'-0"
ELEV. 103'-0"
COMPRESSIBLE MATERIAL
(52.75)
(28.00)
CENTERLINE OF FUEL TRANSFER TUBE
ELEV. 100'-3.75"
(29.38)
ELEV. 98'-1.00"
FLOOR DRAIN
SEAL
(188.00)
LEAK TEST CONNECTION FOR THE BLIND FLANGE SEAL RINGS
QUAD RING SEALS
SEAL PLUGS TO BE INSTALLED IN BOTH LEAK DETECTOR TAPS WHEN THE BLIND FLANGE IS REMOVED. PLUGS TO BE REMOVED PRIOR TO REINSTALLING THE BLIND FLANGE.

NRC 044

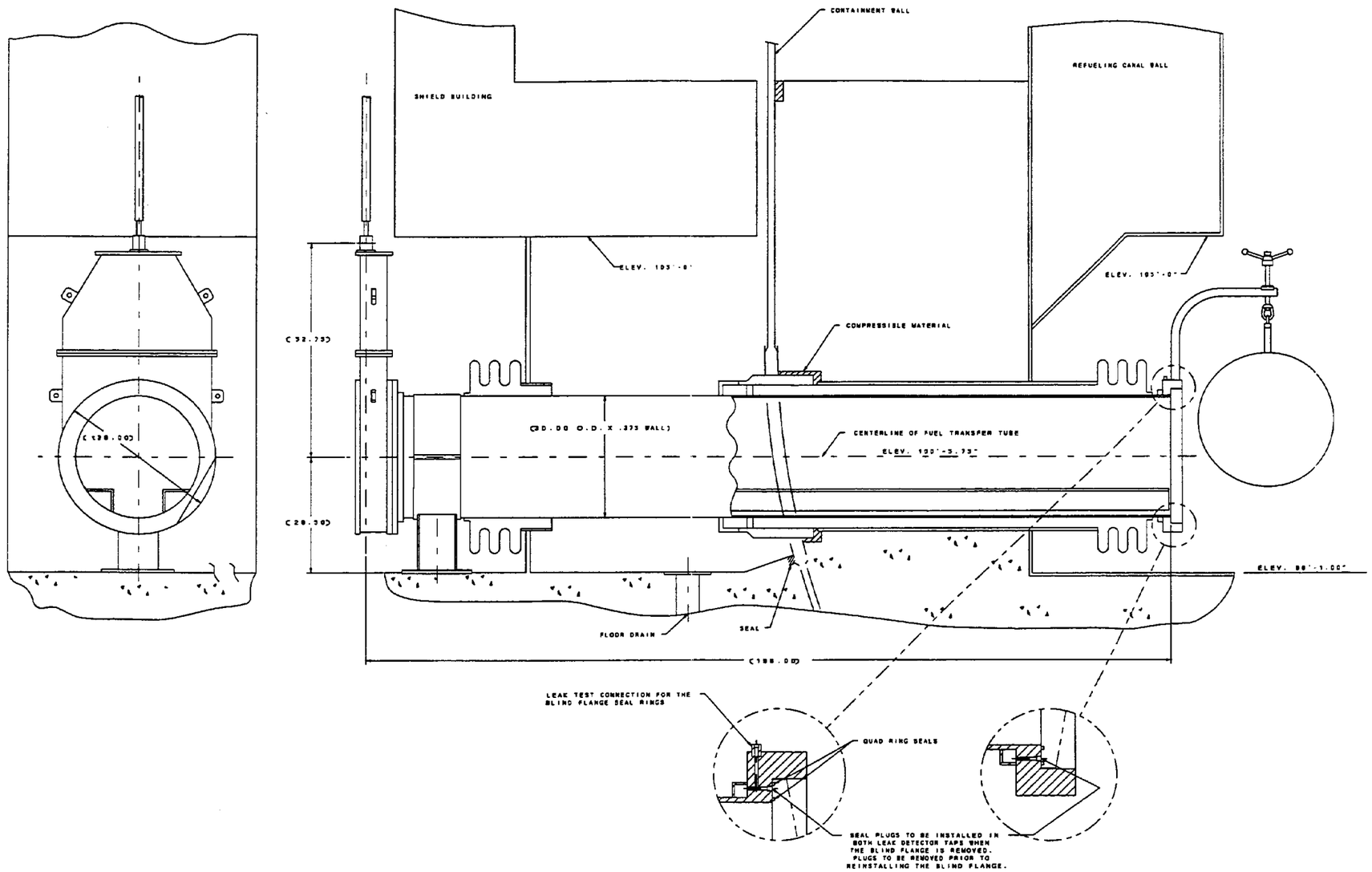

Figure 3.8.2-4 (Sheet 5 of 6)

Containment Penetrations
Fuel Transfer Penetration

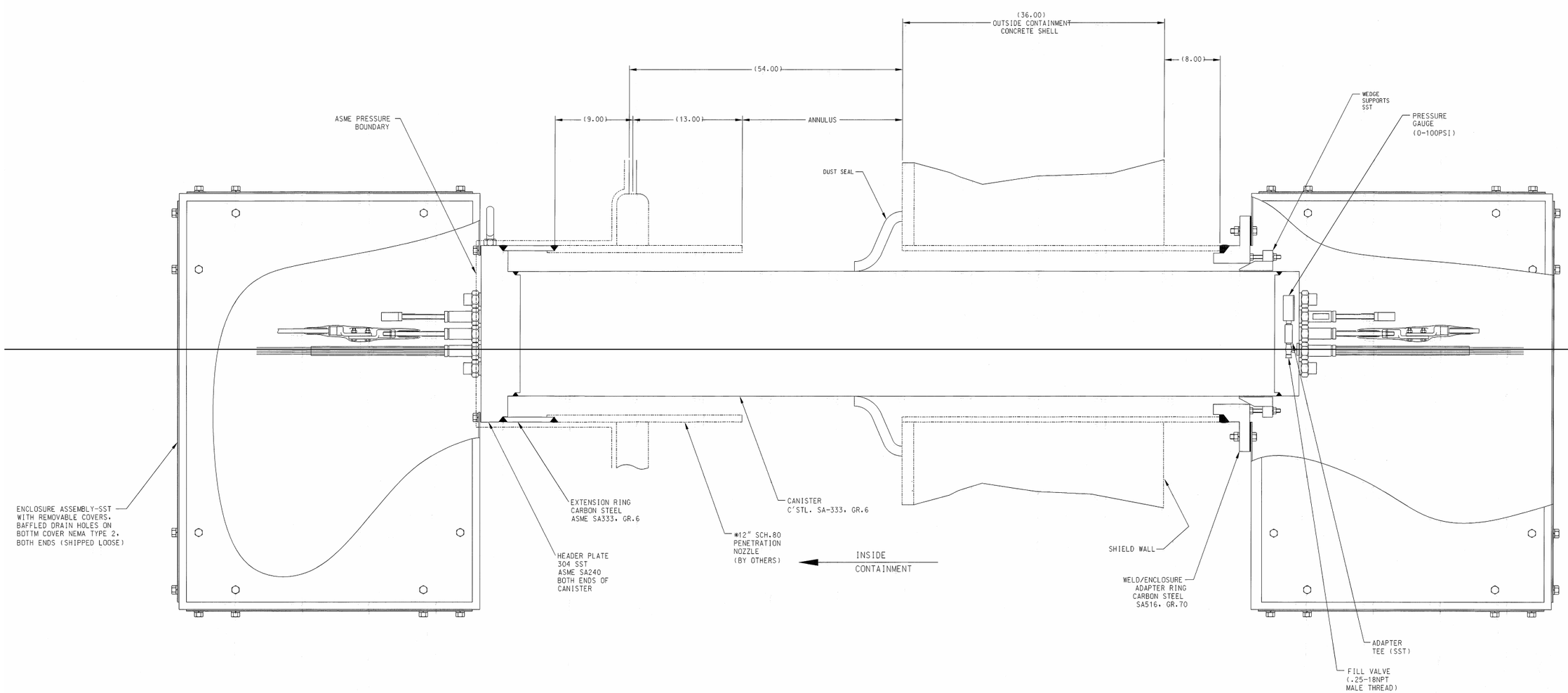
(36.00)
OUTSIDE CONTAINMENT
CONCRETE SHELL
(54.00)
(8.00)
(9.00)
(13.00)
ANNULUS
ASME PRESSURE
BOUNDARY
DUST SEAL
WEDGE
SUPPORTS
SST
PRESSURE
GAUGE
(0-100PSI)
ENCLOSURE ASSEMBLY-SST
WITH REMOVABLE COVERS,
BAFFLED DRAIN HOLES ON
BOTTM COVER NEMA TYPE 2,
BOTH ENDS (SHIPPED LOOSE)
EXTENSION RING
CARBON STEEL
ASME SA333, GR.6
HEADER PLATE
304 SST
ASME SA240
BOTH ENDS OF
CANISTER
*12" SCH.80
PENETRATION
NOZZLE
(BY OTHERS)
CANISTER
C'STL. SA-333, GR.6
INSIDE
CONTAINMENT
SHIELD WALL
WELD/ENCLOSURE
ADAPTER RING
CARBON STEEL
SA516, GR.70
ADAPTER
TEE (SST)
FILL VALVE
(.25-18NPT
MALE THREAD)

NRC 044

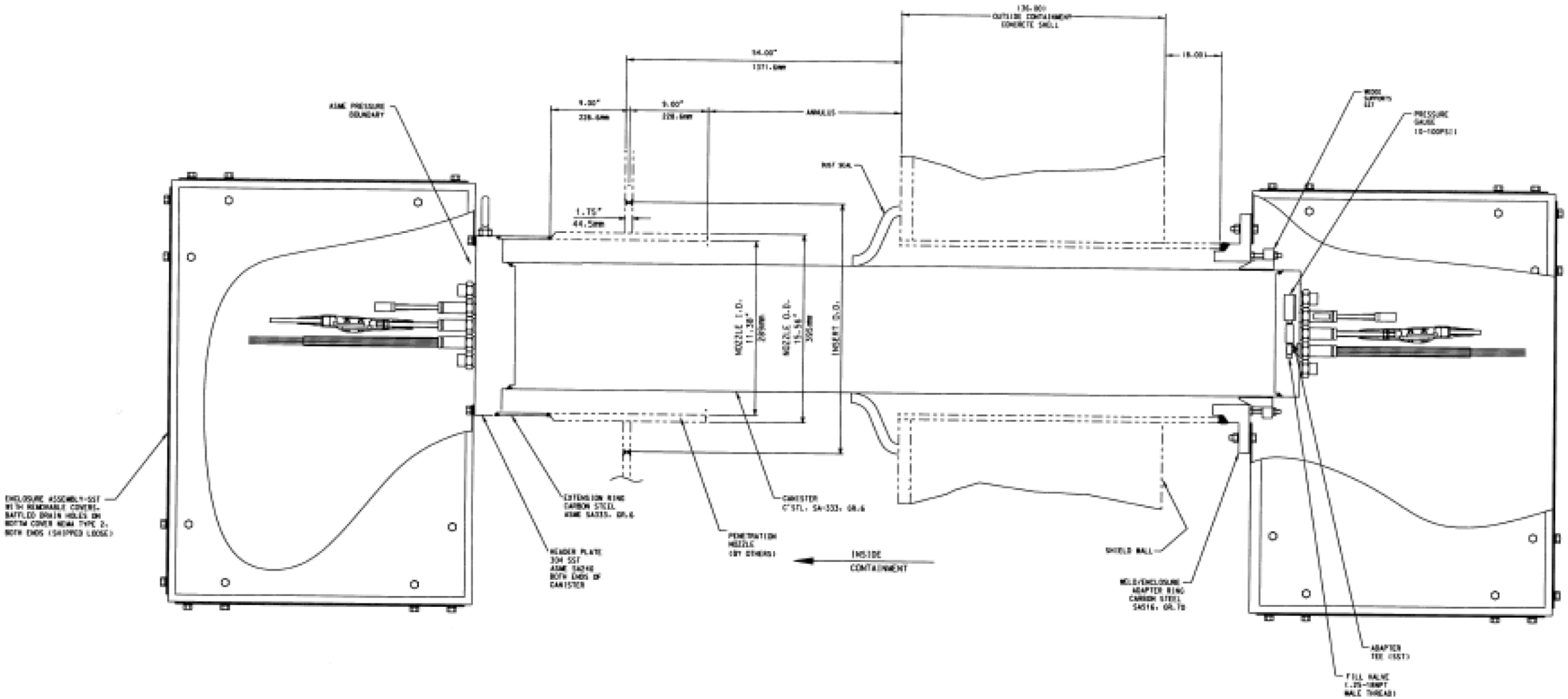

Figure 3.8.2-4 (Sheet 6 of 6)

Containment Penetrations
Typical Electrical Penetration

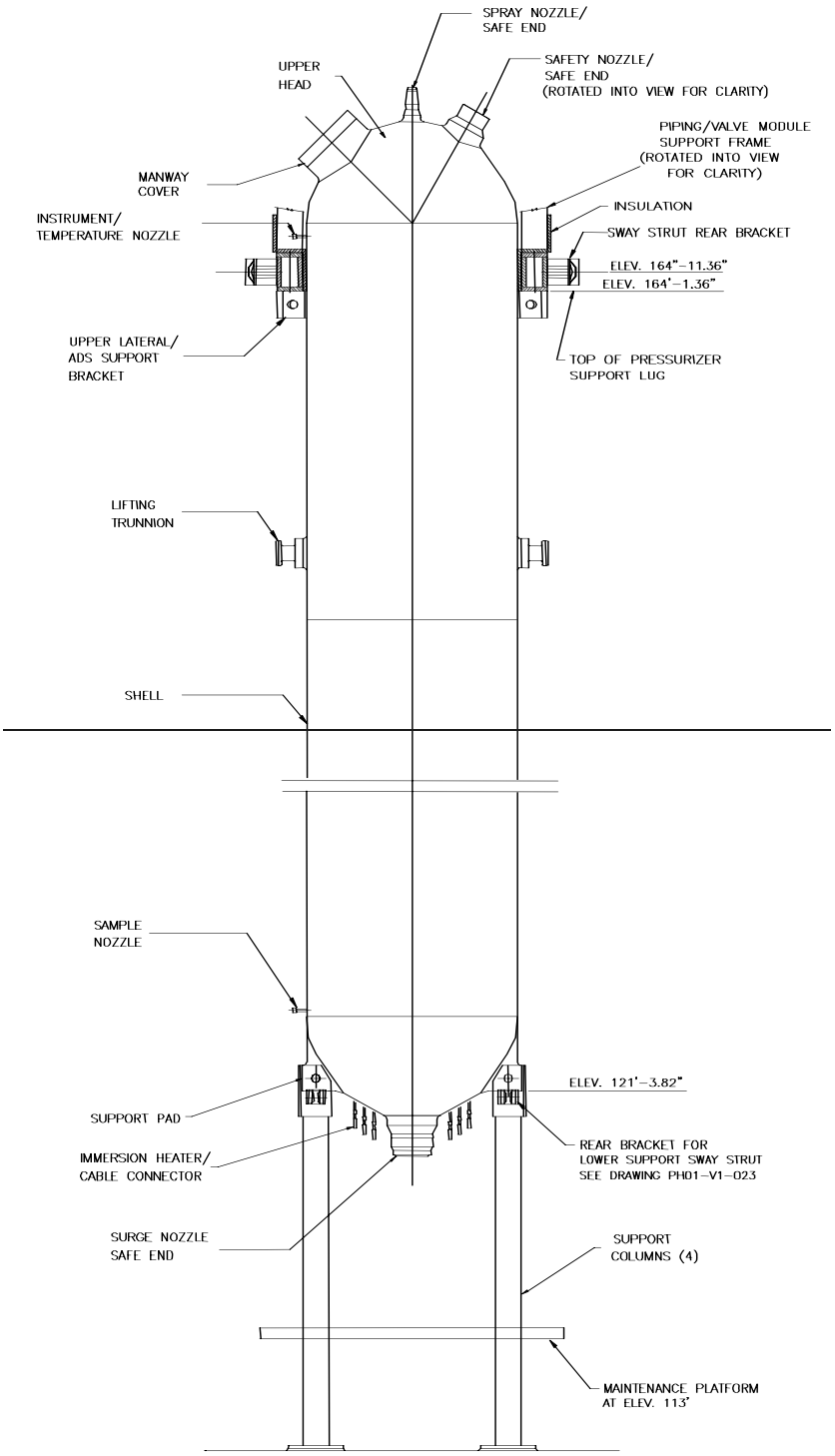
SPRAY NOZZLE/
SAFE END
UPPER
HEAD
SAFETY NOZZLE/
SAFE END
(ROTATED INTO VIEW FOR CLARITY)
PIPING/VALVE MODULE
SUPPORT FRAME
(ROTATED INTO VIEW
FOR CLARITY)
MANWAY
COVER
INSULATION
INSTRUMENT/
TEMPERATURE NOZZLE
SWAY STRUT REAR BRACKET
ELEV. 164"-11.36"
ELEV. 164'-1.36"
UPPER LATERAL/
ADS SUPPORT
BRACKET
TOP OF PRESSURIZER
SUPPORT LUG
LIFTING
TRUNNION
SHELL
SAMPLE
NOZZLE
ELEV. 121'-3.82"
SUPPORT PAD
IMMERSION HEATER/
CABLE CONNECTOR
REAR BRACKET FOR
LOWER SUPPORT SWAY STRUT
SEE DRAWING PH01-V1-023
SURGE NOZZLE
SAFE END
SUPPORT
COLUMNS (4)
MAINTENANCE PLATFORM
AT ELEV. 113'

NRC 097

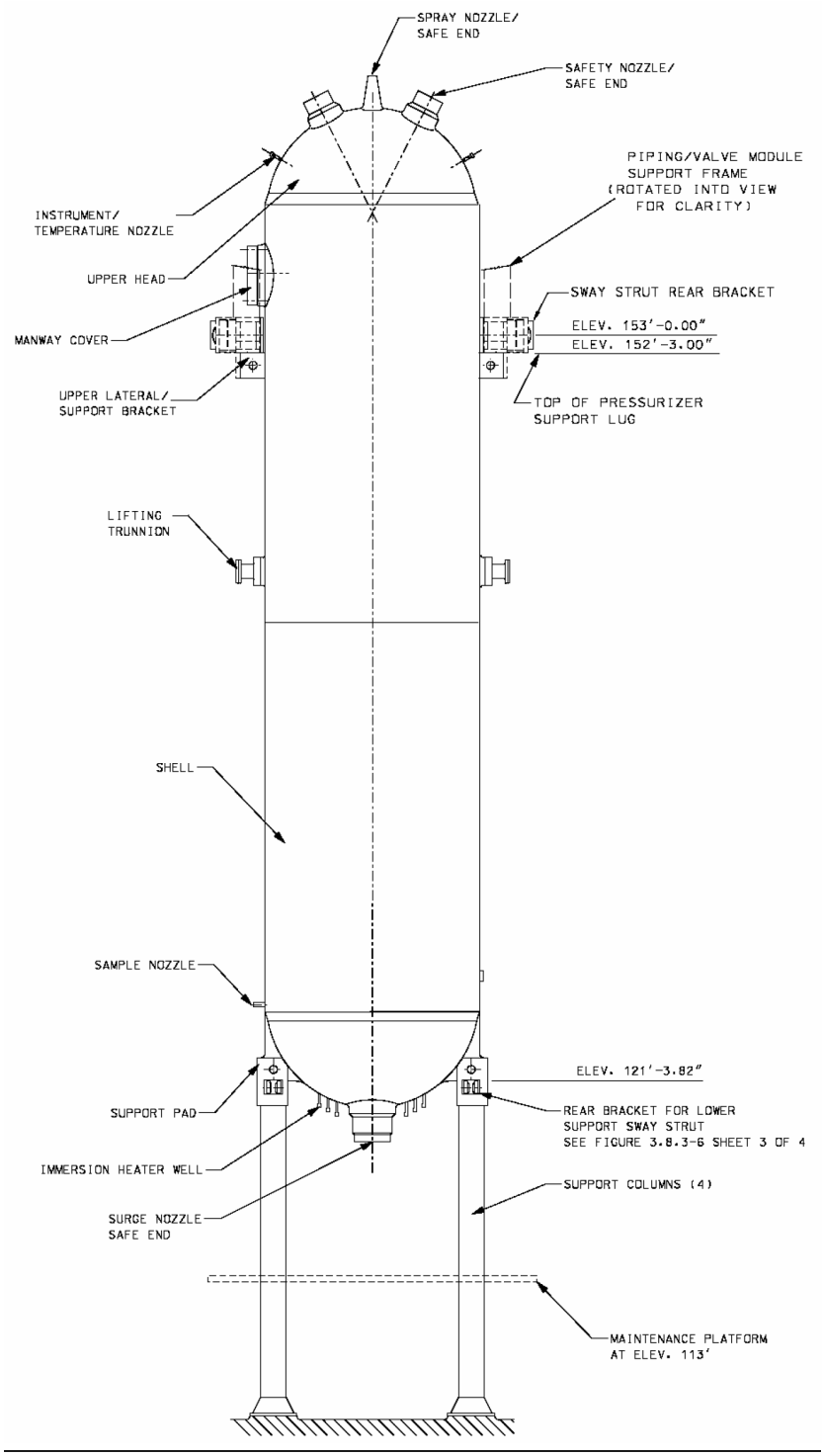

Figure 3.8.3-6 (Sheet 1 of 4)

Pressurizer Support Columns

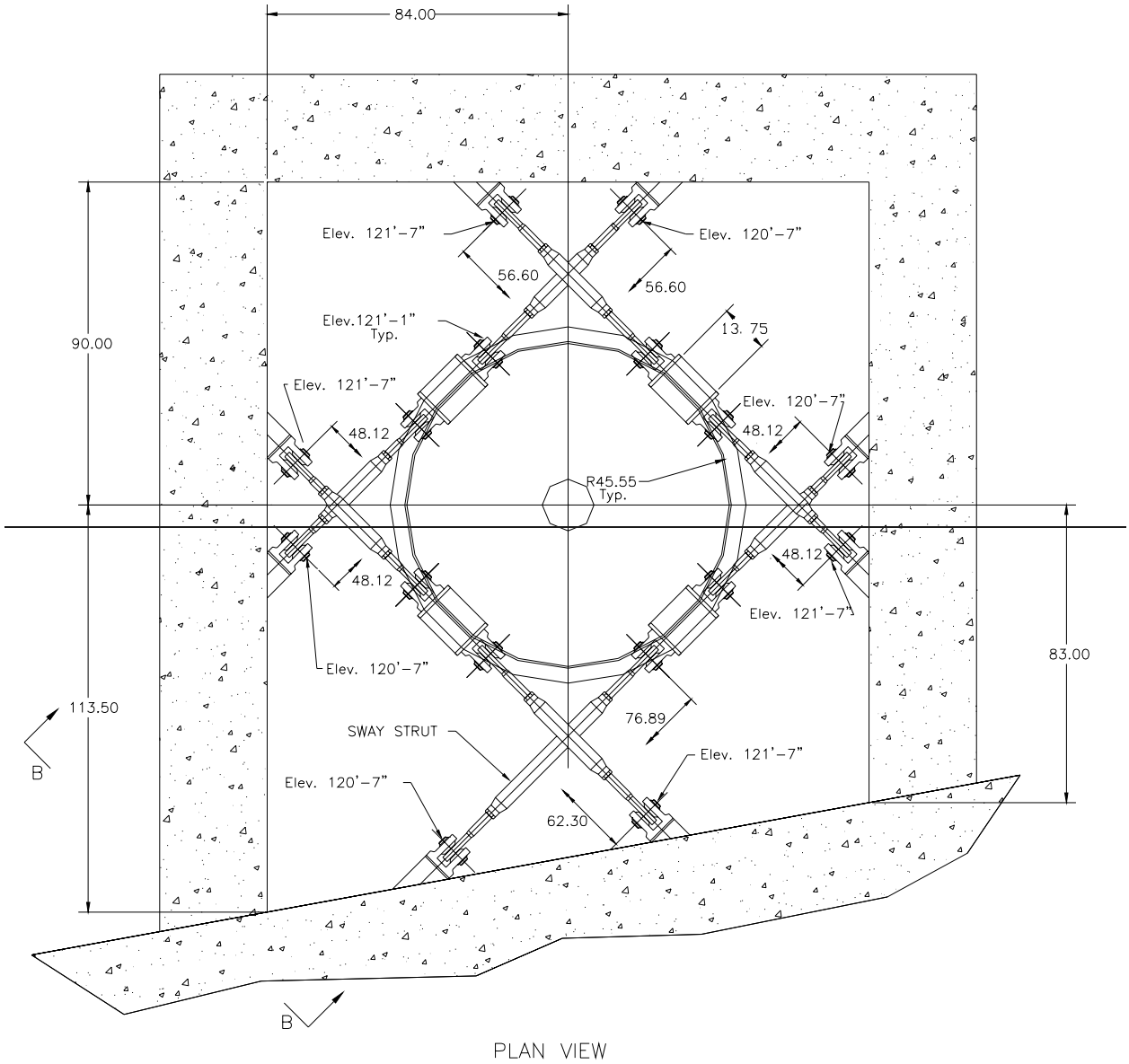
84.00
Elev. 121'-7"
Elev. 120'-7"
56.60
56.60
Elev.121'-1"
Typ.
13. 75
90.00
Elev. 121'-7"
Elev. 120'-7"
48.12
48.12
R45.55
Typ.
48.12
48.12
Elev. 121'-7"
83.00
Elev. 120'-7"
113.50
76.89
SWAY STRUT
Elev. 121'-7"
B
Elev. 120'-7"
62.30
B
PLAN VIEW

NRC 097

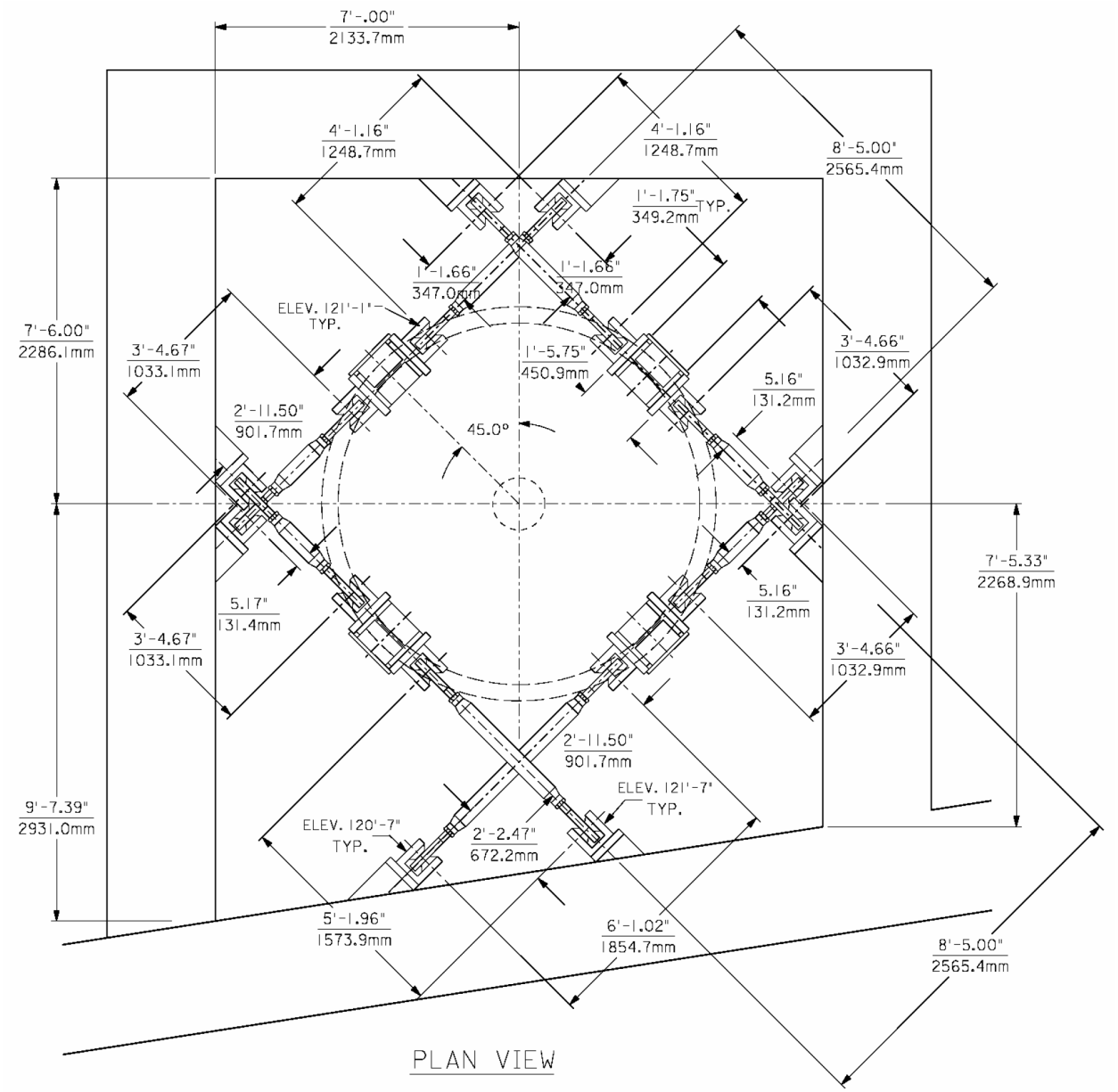

Figure 3.8.3-6 (Sheet 2 of 4)

Pressurizer Lower Lateral Supports

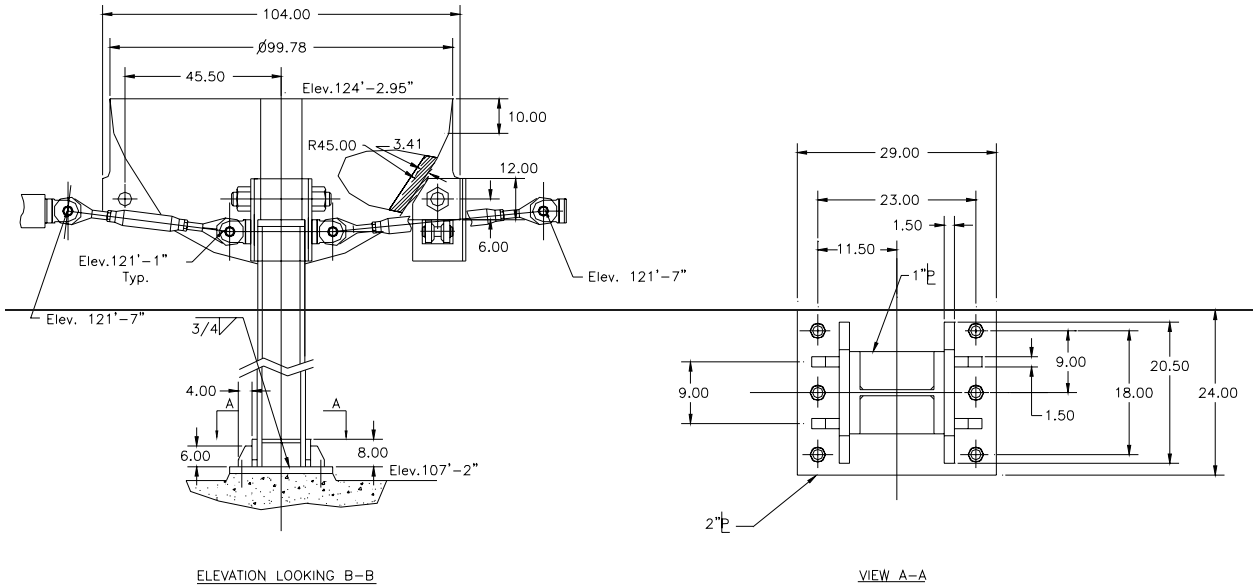
104.00
Ø99.78
45.50
Elev.124'-2.95"
10.00
R45.00
3.41
12.00
6.00
Elev.121'-1"
Typ.
Elev. 121'-7"
Elev. 121'-7"
3/4
4.00
A
A
6.00
8.00
Elev.107'-2"
ELEVATION LOOKING B-B
29.00
23.00
1.50
11.50
1"
9.00
9.00
20.50
18.00
24.00
1.50
2"
VIEW A-A

NRC 097

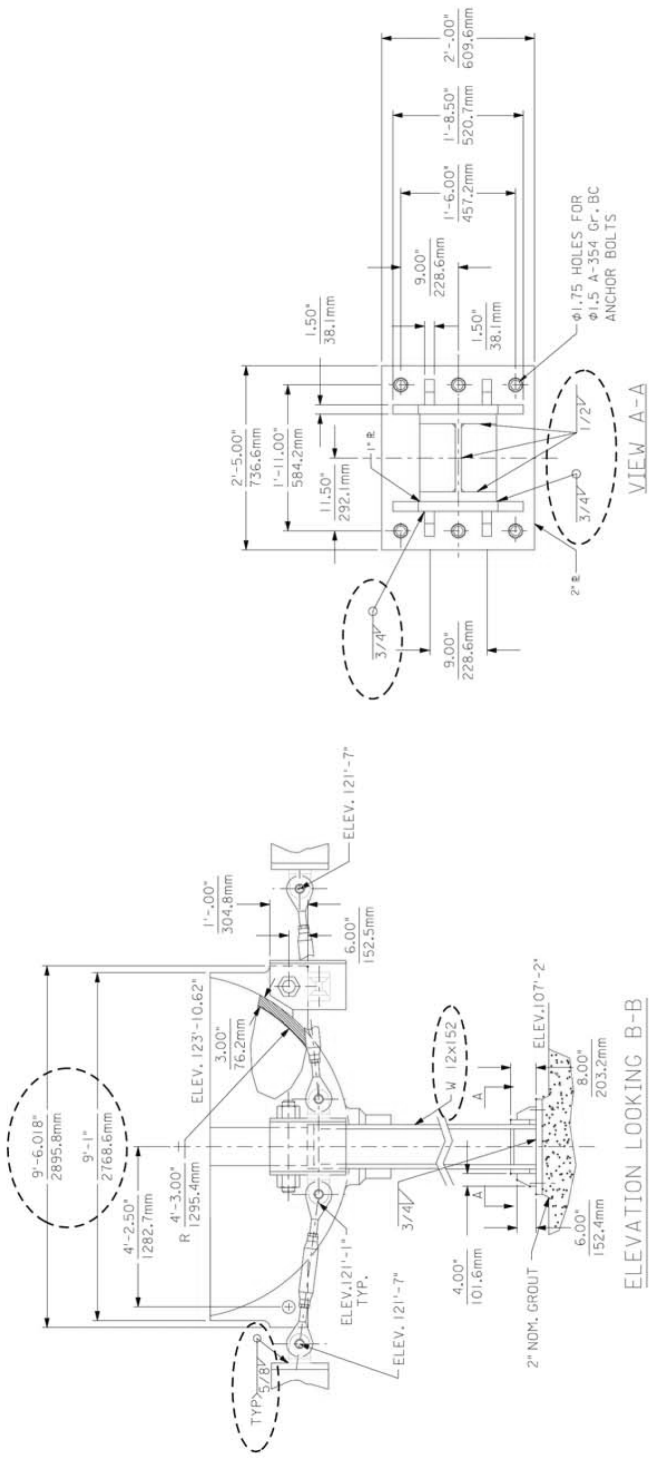

Figure 3.8.3-6 (Sheet 3 of 4)

Pressurizer Lower Supports

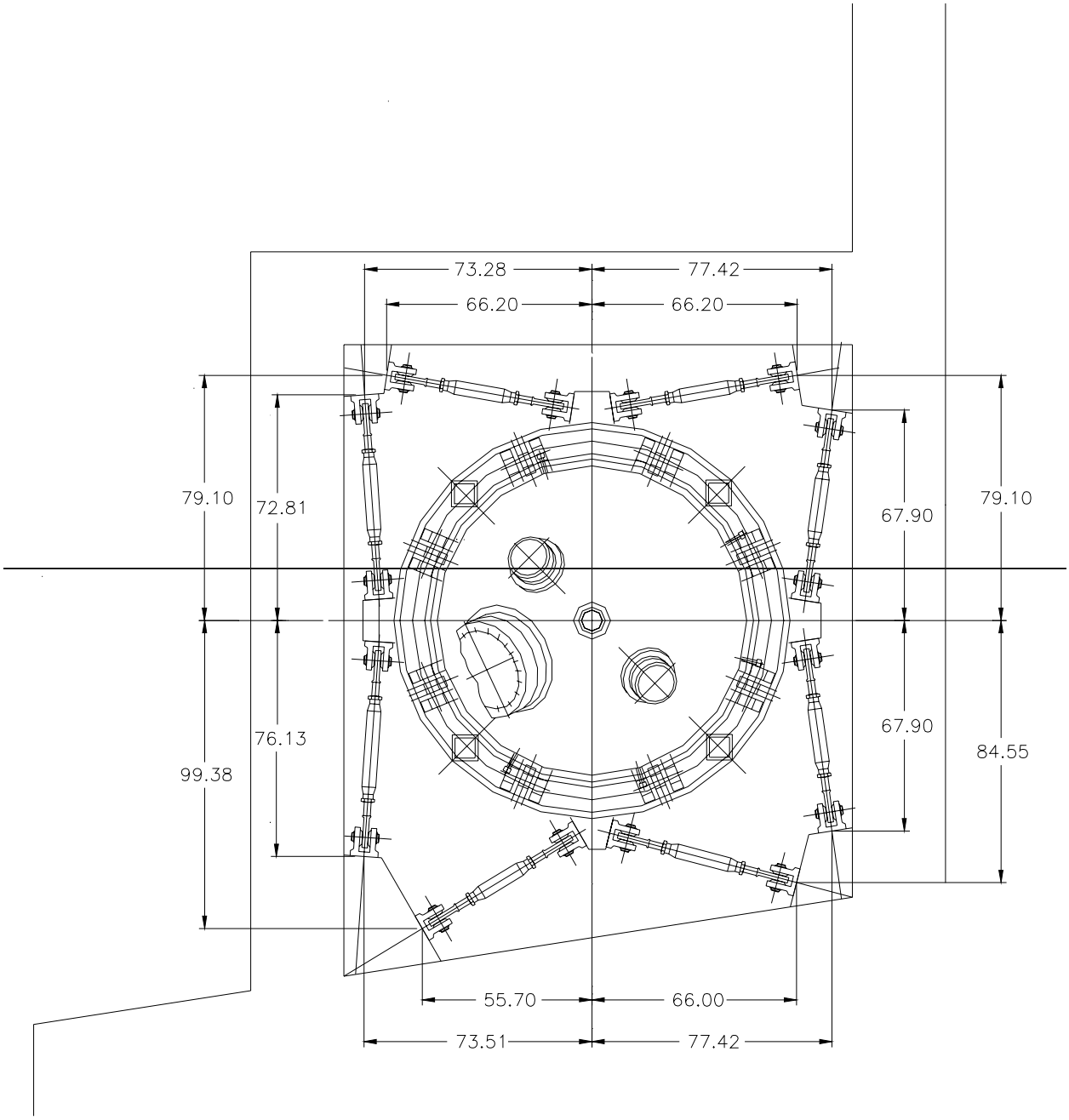
73.28
77.42
66.20
66.20
79.10
72.81
67.90
79.10
76.13
67.90
84.55
99.38
55.70
66.00
73.51
77.42

NRC 097

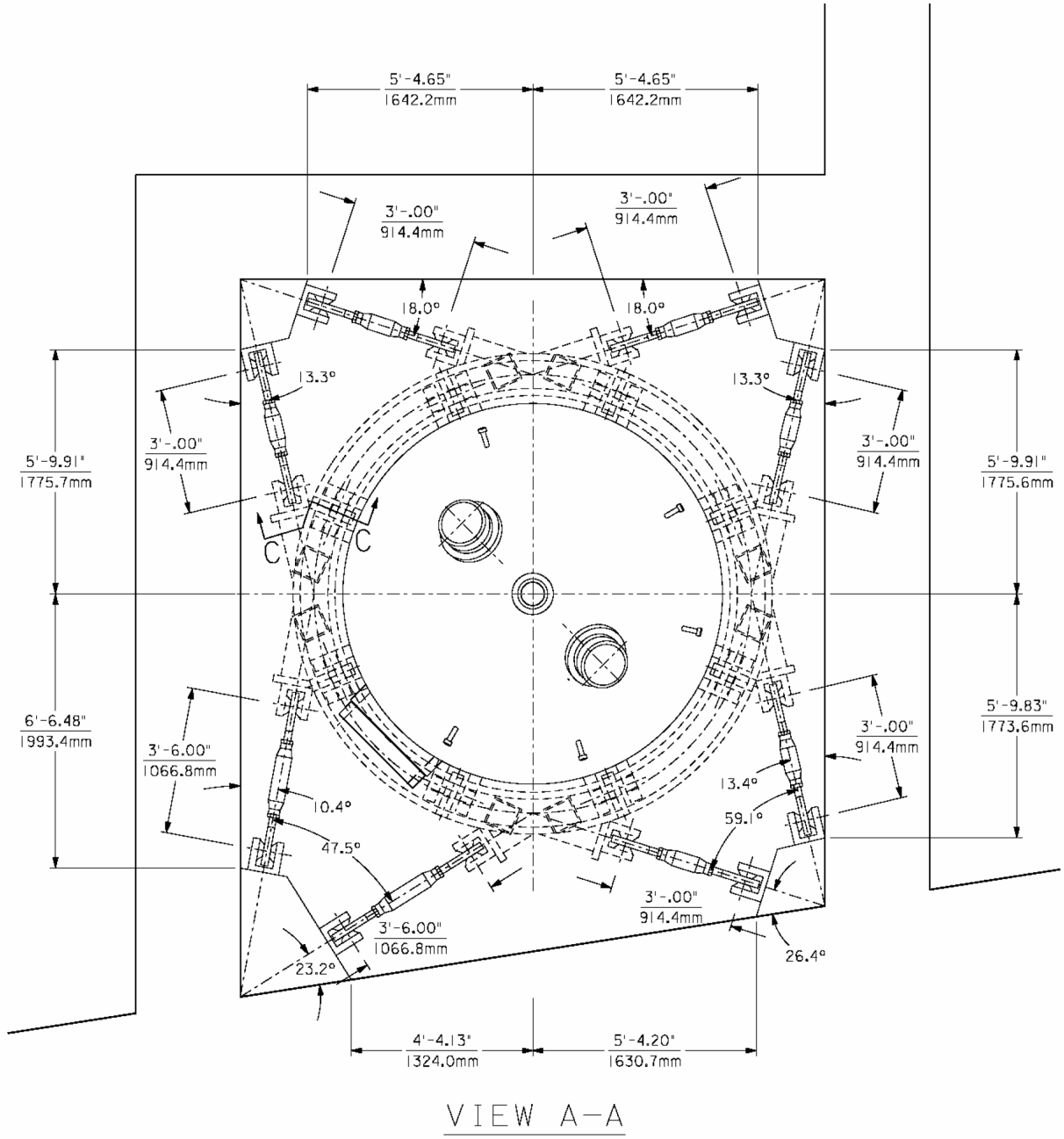

Figure 3.8.3-6 (Sheet 4 of 4)

Pressurizer Upper Supports

The production operability tests for large hydraulic snubbers (that is, those with capacities of 50 kips or greater) include 1) a full Level D load test to verify sufficient load capacity, 2) testing at full load to verify proper bleed with the control valve closed, 3) testing to verify the control valve closes within the specified velocity range, and 4) testing to demonstrate that breakaway and drag loads are within the design limits.

NRC 148

The operability of essential snubbers is verified as described~~discussed~~ in subsection 3.9.3.4.4 and in the inservice testing program required by subsection 3.9.8.3 by verifying the proper installation of the snubbers, and performing visual inspections and measurements of the cold and hot positions of the snubbers as required during plant heatup to verify the snubbers are performing as intended. The ASME OM Code used to develop the inservice testing plan for the AP1000 Design Certification is the 1995 Edition and 1996 Addenda. Inservice testing is performed in accordance with Section XI of the ASME Code and applicable addenda, as required by 10 CFR 50.55a.

3.9.3.4.4 Inspection, Testing, Repair and/or Replacement of Snubbers

A program for inservice examination and testing of dynamic supports (snubbers) in the AP1000 is prepared in accordance with the requirements of ASME OM code, Subsection ISTD.

NRC 148

The inservice examination and testing includes a thermal motion monitoring program that is established for verification of snubber movement, adequate clearance and gaps, including motion measurements and acceptance criteria to assure compliance with ASME Section III, Subsection NF.

The inservice examination and testing plan for applicable snubbers is prepared in accordance with the requirements of the ASME OM Code, Subsection ISTD. Snubber maintenance, repairs, replacements and modifications are performed in accordance with the requirements of the ASME OM Code, Subsection ISTD. Details of the inservice examination and testing program, including test schedules and frequencies, are reported in the inservice inspection and testing plan included in the inservice testing program required by Subsection 3.9.8.3

3.9.3.5 Instrumentation Line Supports

[*The design loads, load combinations, and acceptance criteria for safety-related instrumentation supports are similar to those of pipe supports. Design loads include deadweight, thermal, and seismic (as appropriate). The acceptance criteria is ASME Subsection NF.*]*

3.9.4 Control Rod Drive System (CRDS)

3.9.4.1 Descriptive Information of CRDS

3.9.4.1.1 Control Rod Drive Mechanism (CRDM)

The AP1000 control rod drive mechanism is based on a proven Westinghouse design that has been used in many operating nuclear power plants. Figure 3.9-4 shows the control rod drive mechanism. Figure 4.2-8 shows the configuration of the driveline, including the control rod drive mechanism. Subsection 4.2.2 describes the design of the rod cluster control assemblies and gray

*NRC Staff approval is required prior to implementing a change in this information; see DCD Introduction Section 3.5.

limited to approximately 18 percent, after which a positive stop is provided. The maximum deformation of the secondary core support allows for the maintenance of flow paths through the lower portion of the vessel and lower core support to provide cooling of the fuel under forced and natural circulation conditions.

3.9.6 Inservice Testing of Pumps and Valves

NRC 148

Inservice testing of ASME Code, Section III, Class 1, 2, and 3 pumps and valves is performed in accordance with ~~Section XI of~~ the ASME Operations and Maintenance (OM) Code and applicable addenda, as required by 10 CFR 50.55a(f), except where specific relief has been granted by the NRC in accordance with 10 CFR 50.55a(f). The Code includes requirements for leak tests and functional tests for active components.

The requirements for system pressure tests are defined in the ASME Code, Section XI, IWA-5000. These tests verify the pressure boundary integrity and are part of the inservice inspection program, not part of the inservice test program.

Testing requirements for components constructed to the ASME Code are in several parts of the ASME OM Code (Reference 2). The ASME OM Code used to develop the inservice testing plan for the AP1000 Design Certification is the 1995 Edition and 1996 Addenda. The edition and addenda to be used for the inservice testing program are administratively controlled as described in subsection 3.9.8. A limited number of valves not constructed to the ASME Code are also included in the inservice testing plan using the requirements of the ASME OM Code. These valves are relied on in some safety analyses.

The specific ASME Code requirements for functional testing of pumps are found in the ASME OM Code, Subsection ISTB. The specific ASME Code requirements for functional testing of valves are found in the ASME OM Code, Subsection ISTC. The functional tests are required for pumps and valves that have an active safety-related function.

The AP1000 inservice test plan does not include testing of pumps and valves in nonsafety-related systems unless they perform safety-related missions, such as containment isolation. Subsection 16.3.1 describes the evaluation of the importance of nonsafety-related systems, structures and components. Fluid systems with important missions are shown to be available by operation of the system.

NRC 148

NRC 148

The AP1000 inservice test plan includes periodic systems level tests and inspections that demonstrate the capability of safety-related features to perform their safety-related functions such as passing flow or transferring heat. For this system level testing, t~~T~~he test and inspection frequency is once every 10 years. Staggering of the tests of redundant components is not required. These tests may be performed in conjunction with inservice tests conducted to exercise check valves or to perform power-operated valve operability tests. Alternate means of performing these tests and inspections that provide equivalent demonstration may be developed in the inservice test program as described in subsection 3.9.8. Table 3.9-17 identifies the system level~~inservice~~ tests. The system level testing is not governed by the ASME OM Code.

A preservice test program, which identifies the required functional testing, is to be submitted to the NRC prior to performing the tests and following the start of construction as discussed in subsection 3.9.8. The inservice test program, which identifies requirements for functional testing, is to be submitted to the NRC prior to the anticipated date of commercial operation as described in subsection 3.9.8. Table 3.9-16 identifies the components subject to the preservice and the inservice test program. This table also identifies the method, ~~extent,~~ and frequency of preservice and inservice testing. NRC 148

3.9.6.1 Inservice Testing of Pumps

Safety-related pumps are subject to operational readiness testing. The only safety-related mission performed by an AP1000 pump is the coast down of the reactor coolant pumps. As a result, the AP1000 inservice test plan does not include any pumps.

The AP1000 inservice test plan does not include testing of pumps in nonsafety-related systems unless they perform safety-related missions. Systems containing pumps with important missions have the capability during operation to measure the flow rate, the pump head, and pump vibration to confirm availability of the pumps. These measurements may be made with temporary instruments or test devices. The AP1000 inservice test plan does not include testing of nonsafety-related pumps because they do not perform safety-related missions.

3.9.6.2 Inservice Testing of Valves

Safety-related valves and other selected valves are subject to operational readiness testing. Inservice testing of valves assesses operational readiness including actuating and position indicating systems. The valves that are subject to inservice testing include those valves that perform a specific function in shutting down the reactor to a safe shutdown condition, in maintaining a safe shutdown condition, or in mitigating the consequences of an accident. The AP1000 safe shutdown condition includes conditions other than the cold shutdown mode. Safe shutdown conditions are discussed in subsection 7.4.1. In addition, pressure relief devices used for protecting systems or portions of systems that perform a function in shutting down the reactor to a safe shutdown condition, in maintaining a safe shutdown condition, or in mitigating the consequences of an accident, are subject to inservice testing.

The AP1000 inservice test plan does not include testing of nonsafety-related valves except where they perform safety-related missions. Valves that are identified as having important nonsafety-related missions have provisions to allow testing but are not included in the inservice test plan unless inservice testing is identified as part of the regulatory oversight required for investment protection (see Section 16.3). This testing may use temporary instruments or test devices.

The valve test program is controlled administratively by the Combined License holder and is based on the plan outlined in this subsection. Valves (including relief valves) subject to inservice testing in accordance with the ASME Code are indicated in Table 3.9-16. This table includes the type of testing to be performed and the frequency at which the testing should be performed. The test program conforms to the requirements of ASME OM, Subsection ISTC, to the extent practical. The guidance in NRC Generic Letters, AEOD reports, and industry and utility guidelines (including NRC Generic Letter 89-04) is also considered in developing the test

program. Inservice testing incorporates the use of nonintrusive techniques to periodically assess degradation and performance of selected valves. The testing of power operated valves utilizes guidance from Generic Letter 96-05 and the Joint Owners Group (JOG) MOV Periodic Verification (PV) study, MPR 2524-A (November 2006). During the inservice testing period the following are performed to demonstrate the acceptability of the functional performance of power operated valves other than motor-operated valves; (1) periodically assess the diagnostic methods used in the verification for valve function; and (2) evaluation of lessons learned through other related programs such as MOV Generic Letter (GL) 89-10 and (96-05 Programs.

NRC 148

Safety-related check valves with ~~an active~~ safety function to open or with a safety function to close or remain closed to prevent reverse flow are exercised to both the open and closed positions regardless of safety function position in accordance with the ASME OM Code~~in response to flow~~. Safety-related power-operated valves with an active function are subject to an exercise test and an operability test. The operability test may be either a static or a dynamic (flow and differential pressure) test. Refer to subsection 3.9.6.2.1 for additional information.

NRC 148

Relief from the requirements for testing is discussed in Section 3.9.6.3.~~,~~ ~~i~~If required~~, and~~ the alternative to the tests are justified and documented in DCD Table 3.9-16.

3.9.6.2.1 Valve Functions Tested

The AP1000 inservice testing program plan identifies the safety-related missions for safety-related valves for the AP1000 systems. The following safety-related valve missions have been identified in Table 3.9-16.

- Maintain closed
- Maintain open
- Transfer closed (active function)
- Transfer open (active function)
- Throttle flow (active function)

Based on the safety-related missions identified for each valve, the inservice tests to confirm the capability of the valve to perform these missions are identified. Active valves include valves that transfer open, transfer closed, and/or have throttling missions. Active valves, as defined in the ASME Code, include valves that change obturator (the part of the valve that blocks the flow stream) position to accomplish the safety-related function(s). Valve missions to maintain closed and maintain open are designated as passive and do not include valve exercise inservice testing. Although the throttling function is included in the AP1000 inservice testing program, testing of throttling (pressure regulation) is not required in the ASME OM Code.

NRC 148

If upon removal of the actuation power (electrical power, air or fluid for actuation) an active valve fails to the position associated with performing its safety-related function, it is identified as "active-to-fail" in Table 3.9-16. The 'fail-safe' test is not specifically identified; this function is tested as part of the exercise test.

NRC 148

NRC 148

Valve and actuator characteristics and functions are used in determining the type of inservice testing for the valve. These valve functions include:

- Active or active-to-fail for fulfillment of the safety-related mission(s)
- Reactor coolant system pressure boundary isolation function
- Containment isolation function
- Seat leakage (in the closed position), is limited to a specific maximum amount when important for fulfillment of the safety-related mission(s)
- Actuators that fail to a specific position (open/closed) upon loss of actuating power for fulfillment of the safety-related mission(s)
- Safety-related remote position indication

The ASME inservice testing categories are assigned based on the safety-related valve functions and the valve characteristics. The following criteria are used in assigning the ASME inservice testing categories to the AP1000 valves.

NRC 148

Category A – safety-related valves with safety-related seat leakage requirements (valves for which seat leakage is limited to a specific maximum amount in the closed position for fulfillment of their required function(s))

NRC 148

Category B – safety-related valves requiring inservice testing, but without safety-related seat leakage requirements (valves for which seat leakage in the closed position is inconsequential for fulfillment of the required function(s))

NRC 148

Category C – safety-related, self-actuated valves (such as check valves and pressure relief valves) (valves that are self-actuating in response to some system characteristic, such as pressure (relief valves) or flow direction (check valves) for fulfillment of the required function(s))

NRC 148

Category D – safety-related, explosively actuated valves and nonreclosing pressure relief devices (valves that are actuated by an energy source capable of only on operation, such as rupture disks or explosively actuated valves

3.9.6.2.2 Valve Testing

Four basic groups of inservice tests have been identified for the AP1000. These testing groups are described below.

Remote Valve Position Indication Inservice Tests

Valves that are included in the inservice testing program that have position indication will be observed locally during valve exercising to verify proper operation of the position indication. The

NRC 148 frequency for this position indication test is once every two years, unless otherwise justified. Where local observation is not practicable, other methods will be used for verification of valve position indicator operation. The alternate method and justification are provided in Table 3.9-16.

NRC 148 Position indication testing requirements for passive valves is identified in Table 3.9-16.

Valve Leakage Inservice Tests

Valves with safety-related seat leakage limits will be tested to verify their seat leakage. These valves include:

- Containment Isolation - valves that provide isolation of piping/lines that penetrate the containment.

Containment isolation valves are tested in accordance with 10 CFR 50, Appendix J. Depending on the function and configuration, some valves are tested during the integrated leak rate testing (Type A) or individually as a part of the Type C testing or both. The leak rate test frequency for containment isolation valves is defined in subsection 6.2.5. The provisions in 10 CFR 50.55a (b) 2 that require leakage limits and corrective actions for individual containment isolation valves by reference to ASME~~/ANSI~~ OM, ISTC, which addresses the corrective actions to be taken following the measured inability of a valve to meet its leakage criteria, ~~Part 10~~ apply to the AP1000 containment isolation valves. ~~Changes to these provisions are discussed in subsection 3.9.8.~~

NRC 148

The ASME Code specifies a test frequency for other than containment isolation valves of at least once every 2 years. The ASME Code does not require additional leak testing for valves that demonstrate operability during the course of plant operation. In such cases, the acceptability of the valve performance is recorded during plant operation to satisfy inservice testing requirements. Therefore, a specific inservice test need not be performed on valves that meet this criteria. The AP1000 maximum leakage requirement for pressure isolation valves that provide isolation between high and low pressure systems is included in the surveillance requirements for Technical Specification 3.4.15~~6~~. The pressure isolation valves that require leakage testing are tabulated in Table 3.9-18.

NRC 148

The AP1000 has no temperature isolation valves whose leakage may cause unacceptable thermal loading to piping or supports.

Manual/Power-Operated Valve Tests

Manual/Power-Operated Valve Exercise Tests - Safety-related active valves and other selected active valves, both manual- and power-operated (motor-operated, air-operated, hydraulically operated, solenoid-operated) will be exercised periodically. The ASME code specifies a quarterly valve exercise frequency for power-operated valves. Active manual valves are exercised once every two years in accordance with 10 CFR 50.55a(b)(3)(iv). The AP1000 test frequencies are identified in Table 3.9-16.

NRC 148

In some cases, the valves are tested on a less frequent basis because it is not practicable to exercise the valve during plant operation. If ~~an exception is taken to performing~~ quarterly full-stroke exercise testing of a valve is not practicable, then full-stroke testing will be performed during cold

NRC 148

shutdowns on a frequency not more often than quarterly. If this is not practicable, then the full-stroke testing will be performed each refueling cycle.

The inservice testing requirement for measuring stroke time for valves in the AP1000 will be completed in conjunction with a valve exercise inservice test. The stroke time test is not identified as a separate inservice test.

Valves that operate during the course of normal plant operation at a frequency that satisfies the exercising requirement need not be additionally exercised, provided that the observations required of inservice testing are made and recorded at intervals no greater than that specified in this section.

Safety-related valves that fail to the safety-related actuation position to perform the safety-related missions, are subject to a valve exercise inservice test. The test verifies that the valve repositions to the safety-related position on loss of actuator power. The valve exercise test satisfies this test as long as the test removes actuator power for the valve. The fail-safe test is not identified as a separate test in Table 3.9-16.

NRC 148

Power-Operated Valve Operability Tests - The inservice operability testing of power-operated valves rely on non-intrusive diagnostic techniques to permit periodic assessment of valve operability at design basis conditions. Operability testing as required by 10 CFR 50.55a(b)(3)(ii) is performed on motor-operated valves (MOVs) that are included in the ASME OM Code inservice testing program to demonstrate that the MOVs are capable of performing their design basis safety function(s). Table 3.9-16 identifies valves that may require valve operability testing. The specified frequency for operability testing is a maximum of once every 10 years. The initial test frequency is the longer of every 3 refueling cycles or 5 years until sufficient data exists to determine a longer test frequency is appropriate in accordance with Generic Letter 96-05.

NRC 148

Static testing with diagnostic measurements will be performed on these valves. The specific frequency for operability testing will be based on the risk ranking and the functional margin of the individual valve with a maximum test frequency of once every 10 years. The factors below are used to determine the risk ranking and functional margin. See subsection 3.9.8.4 for a discussion on developing the inservice test program, which will also include analysis of trends of valve test parameters resulting from the valve operability.

- Risk Ranking

  The risk ranking shall consist of calculating the at-power risk importance, developing component ranking worksheets, and conducting an expert panel review.

- Functional Margin

  The functional margin will be determined considering the valve design features, material of construction, operating parameters, actuator capability, and uncertainties. The uncertainties shall consider degradations, and variations of diagnostic measurements and control logic.

NRC 148

Valves for which functional margins have not been determined – due to the use of different valve design features, materials of construction, operating parameters, actuator capability, and other

uncertainties – may require dynamic testing (differential pressure testing) to determine the appropriate margins.

Check Valve Tests

NRC 148

Check Valve Exercise~~Flow~~ Tests - Safety-related check valves identified with specific safety-related missions to transfer open or transfer closed or maintain close are tested periodically. ~~Exercising a check valve confirms the valve capability to move to the position(s) to fulfill the safety-related mission(s).~~ Category C check valves are exercised to both the open and closed positions regardless of safety function position in accordance with ASME OM Code ISTC. The exercise test shows that the check valve opens in response to flow and closes when the flow is stopped. Sufficient flow is provided to fully open the check valve unless the maximum accident flows are not sufficient to fully open the check valve. ~~Either permanently or temporarily installed nonintrusive check valve indication is used for this test~~ .During the exercise test, valve obturator position is verified by direct measurements using nonintusive devises or by other positive means (i.e., changes in system pressure, temperature, flow rate, level, seat leakage or nonintrusive tests results). Valves that can not be checked using a flow test may use other means to exercise the valve to the open and closed position.

NRC 148

Valves that normally operate at a frequency that satisfies the exercising requirement need not be additionally exercised, provided that the observations required of inservice testing are made and recorded at intervals no greater than that specified in this section.

The ASME Code specifies a quarterly valve exercise frequency. The AP1000 test frequencies are identified in Table 3.9-16. In some cases, check valves are tested on a less frequent basis because it is not practical to exercise the valve during plant operation. If ~~an exception is taken to performing~~ quarterly exercise testing is not practicable, then exercise testing is performed during cold shutdown on a frequency not more often than quarterly. If this is not practical, the exercise testing is performed during each refueling outage. If exercise testing during a refueling outage is not practical, then an ~~alternative~~another means is provided. ~~Alternative~~Other means include nonintrusive diagnostic techniques or valve disassembly and inspection.

NRC 148

NRC 148

Check Valve Low Differential Pressure Tests - Safety-related check valves that perform a safety-related mission to transfer open under low differential pressure conditions have periodic inservice testing to verify the capability of the valve to initiate flow.

The intent of this inservice test is to determine the pressure required to initiate flow. This differential pressure will verify that the valve will initiate flow at low differential pressure. This low pressure differential inservice test is performed in addition to exercise inservice tests.

The specified frequency for this inservice test is once each refueling cycle.

Other Valve Inservice Tests

Explosively Actuated Valves - Explosively actuated valves are subject to periodic test firing of the explosive actuator charges. The inservice tests for these valves is specified in the ASME code.

At least 20 percent of the charges installed in the plant in explosively actuated valves are fired and replaced at least once every 2 years. If a charge fails to fire, all charges with the same batch number are removed, discarded, and replaced with charges from a different batch. The firing of the explosive charge may be performed inside of the valve or outside of the valve in a test fixture. The maintenance and review of the service life for charges in explosively actuated valves follow the requirements in the ASME OM Code.

Pressure/Vacuum Relief Devices - Pressure relief devices that provide safety-related functions or that protect equipment in systems that perform AP1000 safety-related missions are specified by ASME to have periodic inservice testing. The inservice tests for these valves are identified in ASME IST, Appendix I.

The periodic inservice testing include visual inspection, seat tightness determination, set pressure determination, and operational determination of balancing devices, alarms, and position indication as appropriate. The frequencies for this inservice test is every 5 years for ASME Class 1 and main steam line safety valve or every 10 years for ASME Classes 2 and 3 devices. Nonreclosing pressure relief devices are inspected when installed and replaced every 5 years unless historical data indicate a requirement for more frequent replacement.

3.9.6.2.3 Valve Disassembly and Inspection

NRC 148

~~Section 3.9.8 discusses developing a~~ The program for periodic check valve disassembly and inspection~~.~~ includes ~~E~~evaluation ~~of the factors below will~~ to determine which of the valves identified in the inservice testing program in Table 3.9-16 ~~will~~ require disassembly and inspection and the frequency of the inspection. If the test methods in ISTC-5221(a) and ISTC-5521(b) are impractical for certain check valves, or if sufficient flow cannot be achieved or verified, a sample disassembly examination program shall be used to verify valve obturator movement. The sample disassembly examination program shall group check valves of similar design, application, and service condition and require a periodic examination of one valve from each group.

NRC 148

Disassembly and inspection of other types of valves will be performed based on information from inservice testing, or other program requirements, as noted below:

- AP1000 PRA importance measures.
- Design reliability assurance program contained in DCD Section 16.2.
- Historical performance of power-operated valves (identify valve types which experience unacceptable degradation in service.)
- Basic design of valves including the use of components subject to aging and requiring periodic replacement.
- Analysis of trends of valve test parameters during valve inservice tests.
- Results of nonintrusive techniques. Disassembly and inspection may not be needed if nonintrusive techniques are sufficient to detect unacceptable valve degradation.

3.9.6.3 Relief Requests

NRC 148 Considerable experience has been used in designing and locating systems and valves to permit preservice and inservice testing required by ~~Section XI of~~ the ASME OM Code. Deferral of testing to cold shutdown or refueling outages in conformance with the rules of the ASME OM Code when testing during power operation is not practical is not considered a relief request. Relief from the testing requirements of the ASME OM Code will be requested when full compliance NRC 148 with requirements of the ASME OM Code ~~of the Code~~ is not practical. In such cases, specific information will be provided which identifies the applicable code requirements, justification for the relief request, and the testing method to be used as an alternative.

3.9.7 Integrated Head Package

The integrated head package (IHP) combines several components in one assembly to simplify refueling the reactor. Figure 3.9-7 illustrates the integrated head package. The integrated head package includes a lifting rig, seismic restraints for control rod drive mechanisms, support for reactor head vent piping, power cables, cables and guide tubes for in-core instrumentation, cable supports and shroud assembly.

The integrated head package provides the ability to rapidly disconnect cables, including the CRDM power cables, digital rod position indication cables, and in-core instrument cables from the components. The integrated head package also provides the ability to rapidly disconnect the reactor head vent system.

The integrated head package provides the ability to move these components as an assembly to permit their lifting and removal with the reactor vessel head. In addition, the integrated head package provides support for the vessel head stud tensioner/detensioner during refueling.

The lifting rig function is discussed in subsection 9.1.5. The control rod drive mechanisms are discussed in subsection 3.9.4. The control rod drive mechanism support and cooling function is discussed in Section 4.6. The reactor vessel head vent function is discussed in subsection 5.4.12. The function and requirements of the in-core instrumentation are discussed in Chapter 7.

3.9.7.1 Design Bases

Components, including the shroud and control rod drive mechanism seismic support plate, required to provide seismic restraint for the control rod drive mechanisms and the valves and piping of the reactor head vent are AP1000 equipment Class C, seismic Category I. The shroud and seismic support plate are designed in accordance with the ASME Code, Section III, Subsection NF requirements.

The loads and loading combinations due to seismic loads for these components are developed using the appropriate seismic spectra.

The structural design of the integrated head package is based on a design temperature consistent with the heat loads from the vessel head, the control rod drive mechanisms, and electrical power cables. The design also considers changes in temperature resulting from plant design transients and loss of power to the cooling fans.

Table 3.9-16 (Sheet 1 of 21)

VALVE INSERVICE TEST REQUIREMENTS

Valve Tag Number	Description[1]	Valve/Actuator Type	Safety-Related Missions	Safety Functions[2]	ASME Class/ IST Category	Inservice Testing Type and Frequency	IST Notes
CAS-PL-V014	Instrument Air Supply Outside Containment Isolation	Remote AO Butterfly	Maintain Close Transfer Close	Active-to-Failed Containment Isolation Safety Seat Leakage Remote Position	Class 2 Category A	Remote Position Indication, Exercise/2 Years Containment Isolation Leak Test Exercise Full Stroke/Refueling Shutdown Operability Test	18, 27, 31
CAS-PL-V015	Instrument Air Supply Inside Containment Isolation	Check	Maintain Close Transfer Close	Active Containment Isolation Safety Seat Leakage	Class 2 Category AC	Containment Isolation Leak Test Check Exercise/Refueling Shutdown	18, 27
CAS-PL-V204	Service Air Supply Outside Containment Isolation	Manual	Maintain Close	Containment Isolation Safety Seat Leakage	Class 2 Category A	Containment Isolation Leak Test	27
CAS-PL-V205	Service Air Supply Inside Containment Isolation	Check	Maintain Close	Containment Isolation Safety Seat Leakage	Class 2 Category AC	Containment Isolation Leak Test	27
CCS-PL-V200	CCS Containment Isolation Valve - Inlet Line ORC	Remote MO Butterfly	Maintain Close Transfer Close	Active Containment Isolation Safety Seat Leakage Remote Position	Class 2 Category A	Remote Position Indication, Exercise/2 Years Containment Isolation Leak Test Exercise Full Stroke/Cold Shutdown Operability Test	14, 27, 31
CCS-PL-V201	CCS Containment Isolation Valve - Inlet Line IRC	Check	Maintain Close Transfer Close	Active Containment Isolation Safety Seat Leakage	Class 2 Category AC	Containment Isolation Leak Test Check Exercise/Cold Shutdown	14, 27
CCS-PL-V207	CCS Containment Isolation Valve - Outlet Line IRC	Remote MO Butterfly	Maintain Close Transfer Close	Active Containment Isolation Safety Seat Leakage Remote Position	Class 2 Category A	Remote Position Indication, Exercise/2 Years Containment Isolation Leak Test Exercise Full Stroke/Cold Shutdown Operability Test	14, 27, 31
CCS-PL-V208	CCS Containment Isolation Valve - Outlet Line ORC	Remote MO Butterfly	Maintain Close Transfer Close	Active Containment Isolation Safety Seat Leakage Remote Position	Class 2 Category A	Remote Position Indication, Exercise/2 Years Containment Isolation Leak Test Exercise Full Stroke/Cold Shutdown Operability Test	14, 27, 31
CVS-PL-V001	RCS Purification Stop	Remote MO GATE	Maintain Close Transfer Close	Active Safety Seat Leakage Remote Position	Class 1 Category A	Remote Position Indication, Exercise/2 Years RCS Isolation Leak Test/Refueling Exercise Full Stroke/Cold Shutdown Operability Test	6, 31, 32
CVS-PL-V002	RCS Purification Stop	Remote MO GATE	Maintain Close Transfer Close	Active Safety Seat Leakage Remote Position	Class 1 Category A	Remote Position Indication, Exercise/2 Years RCS Isolation Leak Test/Refueling Exercise Full Stroke/Cold Shutdown Operability Test	6, 31, 32
CVS-PL-V003	RCS Purification Stop	Remote MO GLOBE	Maintain Close Transfer Close	Active Remote Position	Class 3 Category B	Remote Position Indication, Exercise/2 Years Exercise Full Stroke/Cold Shutdown Operability Test	6, 31

Table 3.9-16 (Sheet 2 of 21)

VALVE INSERVICE TEST REQUIREMENTS

Valve Tag Number	Description[1]	Valve/Actuator Type	Safety-Related Missions	Safety Functions[2]	ASME Class/ IST Category	Inservice Testing Type and Frequency	IST Notes
CVS-PL-V040	Resin Flush IRC Isolation	Manual	Maintain Close	Containment Isolation Safety Seat Leakage	Class 2 Category A	Containment Isolation Leak Test	27
CVS-PL-V041	Resin Flush ORC Isolation	Manual	Maintain Close	Containment Isolation Safety Seat Leakage	Class 2 Category A	Containment Isolation Leak Test	27
CVS-PL-V042	Flush Line Containment Isolation Relief	Relief	Maintain Close Transfer Open Transfer Close	Active Containment Isolation Safety Seat Leakage	Class 2 Category AC	Containment Isolation Leak Test Class 2/3 Relief Valve Tests/10 Years and 20% in 4 Years	27
CVS-PL-V045	Letdown Containment Isolation IRC	Remote AO GLOBE	Maintain Close Transfer Close	Active-to-Failed RCS Pressure Boundary Containment Isolation Safety Seat Leakage Remote Position	Class 2 Category A	Remote Position Indication, Exercise/2 Years Containment Isolation Leak Test Exercise Full Stroke/Quarterly Operability Test	27, 31
CVS-PL-V047	Letdown Containment Isolation ORC	Remote AO GLOBE	Maintain Close Transfer Close	Active-to-Failed RCS Pressure Boundary Containment Isolation Safety Seat Leakage Remote Position	Class 2 Category A	Remote Position Indication, Exercise/2 Years Containment Isolation Leak Test Exercise Full Stroke/Quarterly Operability Test	27, 31
CVS-PL-V080	RCS Purification Return Line Check Valve	Check	Maintain Close Transfer Close	Active Safety Seat Leakage	Class 3 Category AC	Check Exercise/Cold Shutdown RCS Isolation Leak Test/Refueling	6, 32
CVS-PL-V081	RCS Purification Return Line Stop Valve	AO Stop Check	Maintain Close Transfer Close	Active Safety Seat Leakage	Class 1 Category AC	Check Exercise/Cold Shutdown RCS Isolation Leak Test/Refueling	6, 8, 32
CVS-PL-V082	RCS Purification Return Line Check Valve	Check	Maintain Close Transfer Close	Active Safety Seat Leakage	Class 1 Category AC	Check Exercise/Cold Shutdown RCS Isolation Leak Test/Refueling	6, 32
CVS-PL-V084	Auxiliary Pressurizer Spray Line Isolation	Remote AO GLOBE	Maintain Close Transfer Close	Active-to-Failed Safety Seat Leakage Remote Position	Class 1 Category A	Remote Position Indication, Exercise/2 Years RCS Isolation Leak Test/Refueling Exercise Full Stroke/Cold Shutdown Operability Test	22, 31, 32
CVS-PL-V085	Auxiliary Pressurizer Spray Line	Check	Maintain Close Transfer Close	Active Safety Seat Leakage	Class 1 Category AC	Check Exercise/Cold Shutdown RCS Isolation Leak Test/Refueling	22, 32
CVS-PL-V090	Makeup Line Containment Isolation	Remote MO GATE	Maintain Close Transfer Close	Active RCS Pressure Boundary Containment Isolation Safety Seat Leakage Remote Position	Class 2 Category A	Remote Position Indication, Exercise/2 Years Containment Isolation Leak Test Exercise Full Stroke/Quarterly Operability Test	27, 31

Table 3.9-16 (Sheet 3 of 21)

VALVE INSERVICE TEST REQUIREMENTS

	Valve Tag Number	Description[1]	Valve/Actuator Type	Safety-Related Missions	Safety Functions[2]	ASME Class/ IST Category	Inservice Testing Type and Frequency	IST Notes
NRC 148	CVS-PL-V091	Makeup Line Containment Isolation	Remote MO GATE	Maintain Close Transfer Close	Active RCS Pressure Boundary Containment Isolation Safety Seat Leakage Remote Position	Class 2 Category A	Remote Position Indication, Exercise/2 Years Containment Isolation Leak Test Exercise Full Stroke/Quarterly Operability Test	27, 31
NRC 148	CVS-PL-V092	Hydrogen Addition Containment Isolation	Remote AO GLOBE	Maintain Close Transfer Close	Active-to-Failed RCS Pressure Boundary Containment Isolation Safety Seat Leakage Remote Position	Class 2 Category A	Remote Position Indication, Exercise/2 Years Containment Isolation Leak Test Exercise Full Stroke/Quarterly Operation Operability Test	27, 31
NRC 148	CVS-PL-V094	Hydrogen Addition IRC Isolation	Check	Maintain Close Transfer Close	Active RCS Pressure Boundary Containment Isolation Safety Seat Leakage Remote Position	Class 2 Category AC	Remote Position Indication, Exercise/2 Years Containment Isolation Leak Test Check Exercise/Quarterly Operation	27
NRC 148	CVS-PL-V100	Makeup Line Containment Isolation Relief	Check	Maintain Close Transfer Close Transfer Open	Active Containment Isolation Safety Seat Leakage	Class 2 Category AC	Containment Isolation Leak Test/2 Years Check Exercise/Refueling Shutdown	23, 27
NRC 148	CVS-PL-V136A	Demineralized Water System Isolation	Remote AO Butterfly	Maintain Close Transfer Close	Active-to-Failed Remote Position	Class 3 Category B	Remote Position Indication, Exercise/2 Years Exercise Full Stroke/Quarterly Operability Test	31
NRC 148	CVS-PL-V136B	Demineralized Water System Isolation	Remote AO Butterfly	Maintain Close Transfer Close	Active-to-Failed Remote Position	Class 3 Category B	Remote Position Indication, Exercise/2 Years Exercise Full Stroke/Quarterly Operability Test	31
	DWS-PL-V244	Demineralized Water Supply Containment Isolation - Outside	Manual	Maintain Close	Containment Isolation Safety Seat Leakage	Class 2 Category A	Containment Isolation Leak Test	27
	DWS-PL-V245	Demineralized Water Supply Containment Isolation - Inside	Check	Maintain Close	Containment Isolation Safety Seat Leakage	Class 2 Category AC	Containment Isolation Leak Test	27
NRC 148	FPS-PL-V050	Fire Water Containment Supply Isolation	Manual	Maintain Close	Containment Isolation Safety Seat Leakage	Class 2 Category A	Containment Isolation Leak Test	27
	FPS-PL-V052	Fire Water Containment Supply Isolation - Inside	Check	Maintain Close	Containment Isolation Safety Seat Leakage	Class 2 Category AC	Containment Isolation Leak Test	27
	FHS-PL-V001	Fuel Transfer Tube Isolation Valve	Manual	Transfer Close Maintain Open	Active	Class 3 Category B	Exercise Full Stroke/2 Years~~Refueling Shutdown~~	33, 37

Table 3.9-16 (Sheet 4 of 21)

VALVE INSERVICE TEST REQUIREMENTS

	Valve Tag Number	Description[1]	Valve/Actuator Type	Safety-Related Missions	Safety Functions[2]	ASME Class/ IST Category	Inservice Testing Type and Frequency	IST Notes
NRC 148	MSS-PL-V001	Turbine Bypass Control Valve	Remote AO GLOBE	Maintain Close Transfer Close	Active-to-Failed Remote Position	Non Code Category B	Remote Position Indication, Exercise/2 Years Exercise Full Stroke/Cold Shutdown Operability Test	29, 31, 34
NRC 148	MSS-PL-V002	Turbine Bypass Control Valve	Remote AO GLOBE	Maintain Close Transfer Close	Active-to-Failed Remote Position	Non Code Category B	Remote Position Indication, Exercise/2 Years Exercise Full Stroke/Cold Shutdown Operability Test	29, 31, 34
NRC 148	MSS-PL-V003	Turbine Bypass Control Valve	Remote AO GLOBE	Maintain Close Transfer Close	Active-to-Failed Remote Position	Non Code Category B	Remote Position Indication, Exercise/2 Years Exercise Full Stroke/Cold Shutdown Operability Test	29, 31, 34
NRC 148	MSS-PL-V004	Turbine Bypass Control Valve	Remote AO GLOBE	Maintain Close Transfer Close	Active-to-Failed Remote Position	Non Code Category B	Remote Position Indication, Exercise/2 Years Exercise Full Stroke/Cold Shutdown Operability Test	29, 31, 34
NRC 148	MSS-PL-V005	Turbine Bypass Control Valve	Remote AO GLOBE	Maintain Close Transfer Close	Active-to-Failed Remote Position	Non Code Category B	Remote Position Indication, Exercise/2 Years Exercise Full Stroke/Cold Shutdown Operability Test	29, 31, 34
NRC 148	MSS-PL-V006	Turbine Bypass Control Valve	Remote AO GLOBE	Maintain Close Transfer Close	Active-to-Failed Remote Position	Non Code Category B	Remote Position Indication, Exercise/2 Years Exercise Full Stroke/Cold Shutdown Operability Test	29, 31, 34
NRC 148	MSS-PL-V016A	Moisture Separator Reheater Steam Supply Control Valve	Remote AO GLOBE	Maintain Close Transfer Close	Active-to-Failed Remote Position	Non Code Category B	Remote Position Indication, Exercise/2 Years Exercise Part Stroke/Operation Exercise Full Stroke/Cold Shutdown Operability Test	25, 31, 34
	~~MSS-PL-V017A~~	~~Moisture Separator Reheater Steam Supply Bypass Control Valve~~	~~Remote~~	~~Maintain Close Transfer Close~~	~~Active-to-Failed Remote Position~~	~~B~~	~~Remote Position Indication, Exercise/2 Years~~ ~~Exercise Part Stroke/Operation~~ ~~Exercise Full Stroke/Cold Shutdown~~ ~~Operability Test~~	~~25, 31, 34~~
NRC 148	MSS-PL-V016B	Moisture Separator Reheater Steam Supply Control Valve	Remote AO GLOBE	Maintain Close Transfer Close	Active-to-Failed Remote Position	Non Code Category B	Remote Position Indication, Exercise/2 Years Exercise Part Stroke/Operation Exercise Full Stroke/Cold Shutdown Operability Test	25, 31, 34
	~~MSS-PL-V017B~~	~~Moisture Separator Reheater Steam Supply Bypass Control Valve~~	~~Remote~~	~~Maintain Close Transfer Close~~	~~Active-to-Failed Remote Position~~	~~B~~	~~Remote Position Indication, Exercise/2 Years~~ ~~Exercise Part Stroke/Operation~~ ~~Exercise Full Stroke/Cold Shutdown~~ ~~Operability Test~~	~~25, 31, 34~~

	MTS-PL-V001A	Turbine Stop Valve	Remote Electro Hydraulic Angle Globe	Maintain Close Transfer Close	Active-to-Failed Remote Position	Non Code Category B	Remote Position Indication, Exercise/2 Years Exercise Full Stroke/Cold Shutdown Operability Test	31, 34, 35, 36
NRC 148	MTS-PL-V001B	Turbine Stop Valve	Remote Electro Hydraulic Angle Globe	Maintain Close Transfer Close	Active-to-Failed Remote Position	Non Code Category B	Remote Position Indication, Exercise/2 Years Exercise Full Stroke/Cold Shutdown Operability Test	31, 34, 35, 36
	MTS-PL-V002A	Turbine Control Valve	Remote Electro Hydraulic Angle Globe	Maintain Close Transfer Close	Active-to-Failed Remote Position	Non Code Category B	Remote Position Indication, Exercise/2 Years Exercise Part Stroke/Operation Exercise Full Stroke/Cold Shutdown Operability Test	25, 31, 34, 36

Table 3.9-16 (Sheet 5 of 21)

VALVE INSERVICE TEST REQUIREMENTS

	Valve Tag Number	Description[1]	Valve/Actuator Type	Safety-Related Missions	Safety Functions[2]	ASME Class/ IST Category	Inservice Testing Type and Frequency	IST Notes
NRC 148	MTS-PL-V002B	Turbine Control Valve	Remote Electro Hydraulic Angle Globe	Maintain Close Transfer Close	Active-to-Failed Remote Position	Non Code Category B	Remote Position Indication, Exercise/2 Years Exercise Part Stroke/Operation Exercise Full Stroke/Cold Shutdown Operability Test	25, 31, 34, 36
	MTS-PL-V003A	Turbine Stop Valve	Remote Electro Hydraulic Angle Globe	Maintain Close Transfer Close	Active-to-Failed Remote Position	Non Code Category B	Remote Position Indication, Exercise/2 Years Exercise Full Stroke/Cold Shutdown Operability Test	31, 34, 35, 36
NRC 148	MTS-PL-V003B	Turbine Stop Valve	Remote Electro Hydraulic Angle Globe	Maintain Close Transfer Close	Active-to-Failed Remote Position	Non Code Category B	Remote Position Indication, Exercise/2 Years Exercise Full Stroke/Cold Shutdown Operability Test	31, 34, 35, 36
	MTS-PL-V004A	Turbine Control Valve	Remote Electro Hydraulic Angle Globe	Maintain Close Transfer Close	Active-to-Failed Remote Position	Non Code Category B	Remote Position Indication, Exercise/2 Years Exercise Part Stroke/Operation Exercise Full Stroke/Cold Shutdown Operability Test	25, 31, 34, 36
NRC 148	MTS-PL-V004B	Turbine Control Valve	Remote Electro Hydraulic Angle Globe	Maintain Close Transfer Close	Active-to-Failed Remote Position	Non Code Category B	Remote Position Indication, Exercise/2 Years Exercise Part Stroke/Operation Exercise Full Stroke/Cold Shutdown Operability Test	25, 31, 34, 36
NRC 148	PCS-PL-V001A	PCCWST Isolation	Remote AO Butterfly	Maintain Open Transfer Open	Active-to-Failed Remote Position	Class 3 Category B	Remote Position Indication, Exercise/2 Years Exercise Full Stroke/Quarterly Operability Test	31
NRC 148	PCS-PL-V001B	PCCWST Isolation	Remote AO Butterfly	Maintain Open Transfer Open	Active-to-Failed Remote Position	Class 3 Category B	Remote Position Indication, Exercise/2 Years Exercise Full Stroke/Quarterly Operability Test	31
NRC 148	PCS-PL-V001C	PCCWST Isolation	Remote MO GATE	Maintain Open Transfer Open	Active Remote Position	Class 3 Category B	Remote Position Indication, Exercise/2 Years Exercise Full Stroke/Quarterly Operability Test	31
NRC 148 NRC 148	PCS-PL-V002A	PCCWST Series Isolation	Remote MO GATE	Maintain Open Transfer Open	Active Remote Position	Class 3 Category ~~Class 3 Category~~ B	Remote Position Indication, Exercise/2 Years Exercise Full Stroke/Quarterly Operability Test	31
	PCS-PL-V002B	PCCWST Series Isolation	Remote MO GATE	Maintain Open Transfer Open	Active Remote Position	Class 3 Category ~~Class 3 Category~~ B	Remote Position Indication, Exercise/2 Years Exercise Full Stroke/Quarterly Operability Test	31

NRC 148

PCS-PL-V002C	PCCWST Series Isolation	Remote MO GATE	Maintain Open Transfer Open	Active Remote Position	Class 3 Category B	Remote Position Indication, Exercise/2 Years Exercise Full Stroke/Quarterly Operability Test	31

Table 3.9-16 (Sheet 6 of 21)

VALVE INSERVICE TEST REQUIREMENTS

Valve Tag Number	Description[1]	Valve/Actuator Type	Safety-Related Missions	Safety Functions[2]	ASME Class/ IST Category	Inservice Testing Type and Frequency	IST Notes
PCS-PL-V005	PCCWST Supply to Fire Protection Service Isolation	Manual	Maintain Close Transfer Close	Active	Class 3 Category B	Exercise Full Stroke/2 Years	37
PCS-PL-V009	Spent Fuel Pool Emergency Makeup Isolation	Manual	Maintain Close Transfer Open Maintain Open	Active	Class 3 Category B	Exercise Full Stroke/2 Years~~Quarterly~~	37
~~PCS-PL-V014~~	~~Post-72 Hour Water Source Isolation~~	~~Manual/ Check~~	~~Transfer Open~~	~~Active~~	~~B~~	~~Exercise Full Stroke/Quarterly Check Exercise/Refueling~~	37
PCS-PL-V015	Water Bucket Makeup Line Drain Valve	Manual	Maintain Close Transfer Close	Active	Class 3 Category B	Exercise Full Stroke/2 Years~~Quarterly~~	37
PCS-PL-V020	Water Bucket Makeup Line Isolation Valve	Manual	Maintain Open Transfer Open	Active	Class 3 Category B	Exercise Full Stroke/2 Years~~Quarterly~~	37
PCS-PL-V023	PCS Recirculation Return Isolation	Manual	Maintain Close Transfer Close	Active	Class 3 Category B	Exercise Full Stroke/2 Years~~Quarterly~~	13, 37
PCS-PL-V039	PCCWST Long-Term Makeup Check Valve	Check	Maintain Open Transfer Open	Active	Class 3 Category C ~~B~~	Check Exercise/Refueling	21
PCS-PL-V042	PCCWST Long-Term Makeup Isolation Drain Valve	Manual	Maintain Close Transfer Close	Active	Class 3 Category B	Exercise Full Stroke/2 Years~~Quarterly~~	37
PCS-PL-V044	PCCWST Long-Term Makeup Isolation Valve	Manual	Maintain Open Transfer Open	Active	Class 3 Category B	Exercise Full Stroke/2 Years~~Quarterly~~	37
PCS-PL-V045	Emergency Makeup to the Spent Fuel Pool Isolation Valve	Manual	Maintain Open Transfer Open	Active	Class 3 Category B	Exercise Full Stroke/2 Years~~Quarterly~~	37
PCS-PL-V046	PCCWST Recirculation Return Isolation Valve	Manual	Maintain Close Transfer Close	Active	Class 3 Category B	Exercise Full Stroke/2 Years~~Quarterly~~	37
PCS-PL-V049	Emergency Makeup to the Spent Fuel Pool Drain Isolation Valve	Manual	Maintain Close Transfer Close	Active	Class 3 Category B	Exercise Full Stroke/2 Years~~Quarterly~~	37
PCS-PL-V050	Spent Fuel Pool Long-Term Makeup Isolation Valve	Manual	Maintain Open Transfer Open	Active	Class 3 Category B	Exercise Full Stroke/2 Years~~Quarterly~~	37
PCS-PL-V051	Spent Fuel Pool Emergency Makeup Lower Isolation Valve	Manual	Maintain Close Transfer Close	Active	Class 3 Category ~~Class 3 Category~~ B	Exercise Full Stroke/2 Years~~Quarterly~~	37
PSS-PL-V008	Containment Air Sample Containment Isolation IRC	Remote SO GLOBE	Maintain Close Transfer Close	Active-to-Failed Containment Isolation Safety Seat Leakage Remote Position	Class 2 Category ~~Class 2 Category~~ A	Remote Position Indication, Exercise/2 Years Containment Isolation Leak Test Exercise Full Stroke/Quarterly Operability Test	27, 31
PSS-PL-V010A	Liquid Sample Line Containment Isolation IRC	Remote SO GLOBE	Maintain Close Transfer Close	Active-to-Failed Containment Isolation Safety Seat Leakage Remote Position	Class 2 Category A	Remote Position Indication, Exercise/2 Years Containment Isolation Leak Test Exercise Full Stroke/Quarterly Operability Test	27, 31

NRC 148

PSS-PL-V010B	Liquid Sample Line Containment Isolation IRC	Remote SO GLOBE	Maintain Close Transfer Close	Active-to-Failed Containment Isolation Safety Seat Leakage Remote Position	Class 2 Category A	Remote Position Indication, Exercise/2 Years Containment Isolation Leak Test Exercise Full Stroke/Quarterly Operability Test	27, 31

Table 3.9-16 (Sheet 7 of 21)

VALVE INSERVICE TEST REQUIREMENTS

	Valve Tag Number	Description[1]	Valve/Actuator Type	Safety-Related Missions	Safety Functions[2]	ASME Class/ IST Category	Inservice Testing Type and Frequency	IST Notes
NRC 148	PSS-PL-V011	Liquid Sample Line Containment Isolation ORC	Remote AO GLOBE	Maintain Close Transfer Close	Active-to-Failed Containment Isolation Safety Seat Leakage Remote Position	Class 2 Category A	Remote Position Indication, Exercise/2 Years Containment Isolation Leak Test Exercise Full Stroke/Quarterly Operability Test	27, 31
NRC 148	PSS-PL-V023	Sample Return Line Containment Isolation ORC	Remote AO Globe	Maintain Close Transfer Close	Active-to-Failed Containment Isolation Safety Seat Leakage Remote Position	Class 2 Category A	Remote Position Indication, Exercise/2 Years Containment Isolation Leak Test Exercise Full Stroke/Quarterly Operability Test	27, 31
NRC 148	PSS-PL-V024	Sample Return Containment Isolation Check IRC	Check	Maintain Close Transfer Close	Active Containment Isolation Safety Seat Leakage	Class 2 Category AC	Containment Isolation Leak Test Check Exercise/Refueling Shutdown	19, 27
NRC 148	PSS-PL-V046	Air Sample Line Containment Isolation ORC	Remote AO GLOBE	Maintain Close Transfer Close	Active-to-Failed Containment Isolation Safety Seat Leakage Remote Position	Class 2 Category A	Remote Position Indication, Exercise/2 Years Containment Isolation Leak Test Exercise Full Stroke/Quarterly Operability Test	27, 31
	PXS-PL-V002A	Core Makeup Tank A Cold Leg Inlet Isolation	Remote MO GATE	Maintain Open	Remote Position	Class 1 Category B	Remote Position Indication, Exercise/2 Years	
NRC 148	PXS-PL-V002B	Core Makeup Tank B Cold Leg Inlet Isolation	Remote MO GATE	Maintain Open	Remote Position	Class 1 Category B	Remote Position Indication, Exercise/2 Years	
	PXS-PL-V014A	Core Makeup Tank A Discharge Isolation	Remote AO GLOBE	Maintain Open Transfer Open	Active-to-Failed Remote Position	Class 1 Category B	Remote Position Indication, Exercise/2 Years Exercise Full Stroke/Quarterly Operability Test	31
NRC 148	PXS-PL-V014B	Core Makeup Tank B Discharge Isolation	Remote AO GLOBE	Maintain Open Transfer Open	Active-to-Failed Remote Position	Class 1 Category B	Remote Position Indication, Exercise/2 Years Exercise Full Stroke/Quarterly Operability Test	31
NRC 148	PXS-PL-V015A	Core Makeup Tank A Discharge Isolation	Remote AO GLOBE~~AO GLOBE~~	Maintain Open Transfer Open	Active-to-Failed Remote Position	Class 1 Category ~~Class 1 Category~~ B	Remote Position Indication, Exercise/2 Years Exercise Full Stroke/Quarterly Operability Test	31
NRC 148	PXS-PL-V015B	Core Makeup Tank B Discharge Isolation	Remote AO GLOBE	Maintain Open Transfer Open	Active-to-Failed Remote Position	Class 1 Category B	Remote Position Indication, Exercise/2 Years Exercise Full Stroke/Quarterly Operability Test	31
NRC 148	PXS-PL-V016A	Core Makeup Tank A Discharge Check	Check	Maintain Open Transfer Open Transfer Close	Active Remote Position	Class 1 Category BC	Remote Position Indication, Exercise/2 Years Check Exercise/Refueling Shutdown	10
NRC 148	PXS-PL-V016B	Core Makeup Tank B Discharge Check	Check	Maintain Open Transfer Open Transfer Close	Active Remote Position	Class 1 Category BC	Remote Position Indication, Exercise/2 Years Check Exercise/Refueling Shutdown	10

Table 3.9-16 (Sheet 8 of 21)

VALVE INSERVICE TEST REQUIREMENTS

	Valve Tag Number	Description[1]	Valve/Actuator Type	Safety-Related Missions	Safety Functions[2]	ASME Class/ IST Category	Inservice Testing Type and Frequency	IST Notes
NRC 148	PXS-PL-V017A	Core Makeup Tank A Discharge Check	Check	Maintain Open Transfer Open Transfer Close	Active Remote Position	Class 1 Category BC	Remote Position Indication, Exercise/2 Years Check Exercise/Refueling Shutdown	10
NRC 148	PXS-PL-V017B	Core Makeup Tank B Discharge Check	Check	Maintain Open Transfer Open Transfer Close	Active Remote Position	Class 1 Category BC	Remote Position Indication, Exercise/2 Years Check Exercise/Refueling Shutdown	10
NRC 148	PXS-PL-V022A	Accumulator A Pressure Relief	Relief	Maintain Close Transfer Open Transfer Close	Active	Class 3 Category BC	Class 2/3 Relief Valve Tests/10 Years and 20% in 4 Years	
NRC 148	PXS-PL-V022B	Accumulator B Pressure Relief	Relief	Maintain Close Transfer Open Transfer Close	Active	Class 3 Category BC	Class 2/3 Relief Valve Tests/10 Years and 20% in 4 Years	
	PXS-PL-V027A	Accumulator A Discharge Isolation	Remote MO GATE	Maintain Open	Remote Position	Class 1 Category B	Remote Position Indication, Exercise/2 Years	
NRC 148	PXS-PL-V027B	Accumulator B Discharge Isolation	Remote MO GATE	Maintain Open	Remote Position	Class 1 Category B	Remote Position Indication, Exercise/2 Years	
	PXS-PL-V028A	Accumulator A Discharge Check	Check	Maintain Close Transfer Open	Active RCS Pressure Boundary Remote Position Safety Seat Leakage	Class 1 Category AC	Remote Position Indication, Exercise/2 Years Check Exercise/Refueling Shutdown Pressure Isolation Leak Test/2 years~~Refueling Shutdown~~	9
NRC 148	PXS-PL-V028B	Accumulator B Discharge Check	Check	Maintain Close Transfer Open	Active RCS Pressure Boundary Remote Position Safety Seat Leakage	Class 1 Category AC	Remote Position Indication, Exercise/2 Years Check Exercise/Refueling Shutdown Pressure Isolation Leak Test/2 Years~~Refueling Shutdown~~	9
NRC 148	PXS-PL-V029A	Accumulator A Discharge Check	Check	Maintain Close Transfer Open	Active RCS Pressure Boundary Remote Position Safety Seat Leakage	Class 1 Category ~~Class 1 Category~~ AC	Remote Position Indication, Exercise/2 Years Check Exercise/Refueling Shutdown Pressure Isolation Leak Test/Refueling Shutdown	9
NRC 148	PXS-PL-V029B	Accumulator B Discharge Check	Check	Maintain Close Transfer Open	Active RCS Pressure Boundary Remote Position Safety Seat Leakage	Class 1 Category AC	Remote Position Indication, Exercise/2 Years Check Exercise/Refueling Shutdown Pressure Isolation Leak Test/Refueling Shutdown	9
NRC 148	PXS-PL-V042	Nitrogen Supply Containment Isolation ORC	Remote AO GLOBE	Maintain Close Transfer Close	Active-to-Failed Containment Isolation Safety Seat Leakage Remote Position	Class 2 Category A	Remote Position Indication, Exercise/2 Years Containment Isolation Leak Test Exercise Full Stroke/Quarterly Operability Test	27, 31

Table 3.9-16 (Sheet 9 of 21)

VALVE INSERVICE TEST REQUIREMENTS

	Valve Tag Number	Description[1]	Valve/Actuator Type	Safety-Related Missions	Safety Functions[2]	ASME Class/ IST Category	Inservice Testing Type and Frequency	IST Notes
NRC 148	PXS-PL-V043	Nitrogen Supply Containment Isolation IRC	Check	Maintain Close Transfer Close	Active Containment Isolation Safety Seat Leakage Remote Position	Class 2 Category AC	Remote Position Indication, Exercise/2 Years Containment Isolation Leak Test Check Exercise/Quarterly	27
NRC 148	PXS-PL-V101	PRHR HX Inlet Isolation	Remote MO GATE	Maintain Open	Remote Position	Class 1 Category B	Remote Position Indication, Exercise/2 Years	
NRC 148	PXS-PL-V108A	PRHR HX Control	Remote AO GLOBE	Maintain Open Transfer Open	Active-to-Failed Remote Position	Class 1 Category B	Remote Position Indication, Exercise/2 Years Exercise Full Stroke/Quarterly Operability Test	31
NRC 148	PXS-PL-V108B	PRHR HX Control	Remote AO GLOBE	Maintain Open Transfer Open	Active-to-Failed Remote Position	Class 1 Category B	Remote Position Indication, Exercise/2 Years Exercise Full Stroke/Quarterly Operability Test	31
NRC 148	PXS-PL-V117A	Containment Recirculation A Isolation	Remote MO GATE	Maintain Open Maintain Close Transfer Open	Active Remote Position	Class 3 Category B	Remote Position Indication, Exercise/2 Years Exercise Full Stroke/Quarterly Operability Test	31
NRC 148	PXS-PL-V117B	Containment Recirculation B Isolation	Remote MO GATE	Maintain Open Maintain Close Transfer Open	Active Remote Position	Class 3 Category B	Remote Position Indication, Exercise/2 Years Exercise Full Stroke/Quarterly Operability Test	31
NRC 148	PXS-PL-V118A	Containment Recirculation A Isolation	Squib	Maintain Open Maintain Close Transfer Open	Active Remote Position	Class 3 Category D	Remote Position Indication, Alternate/2 Years Charge Test Fire/20% in 2 Years	5
NRC 148	PXS-PL-V118B	Containment Recirculation B Isolation	Squib	Maintain Open Maintain Close Transfer Open	Active Remote Position	Class 3 Category D	Remote Position Indication, Alternate/2 Years Charge Test Fire/20% in 2 Years	5
NRC 148	PXS-PL-V119A	Containment Recirculation A Check	Check	Maintain Open Maintain Close Transfer Open	Active Remote Position	Class 3 Category BC	Remote Position Indication, Exercise/2 Years Check-Initial Open Differential Pressure/2 Years Check Exercise/Refueling Shutdown	11
NRC 148	PXS-PL-V119B	Containment Recirculation B Check	Check	Maintain Open Maintain Close Transfer Open	Active Remote Position	Class 3 Category ~~Class 3 Category~~ BC	Remote Position Indication, Exercise/2 Years Check-Initial Open Differential Pressure/2 Years Check Exercise/Refueling Shutdown	11
NRC 148	PXS-PL-V120A	Containment Recirculation A Isolation	Squib	Maintain Open Maintain Close Transfer Open	Active Remote Position	Class 3 Category D	Remote Position Indication, Alternate/2 Years Charge Test Fire/20% in 2 Years	5
NRC 148	PXS-PL-V120B	Containment Recirculation B Isolation	Squib	Maintain Open Maintain Close Transfer Open	Active Remote Position	Class 3 Category D	Remote Position Indication, Alternate/2 Years Charge Test Fire/20% in 2 Years	5
NRC 148	PXS-PL-V121A	IRWST Line A Isolation	Remote MO GATE	Maintain Open	Remote Position	Class 3 Category B	Remote Position Indication, Exercise/2 Years	

Table 3.9-16 (Sheet 10 of 21)

VALVE INSERVICE TEST REQUIREMENTS

Valve Tag Number	Description[1]	Valve/Actuator Type	Safety-Related Missions	Safety Functions[2]	ASME Class/ IST Category	Inservice Testing Type and Frequency	IST Notes
PXS-PL-V121B	IRWST Line B Isolation	Remote MO GATE	Maintain Open	Remote Position	Class 3 Category B	Remote Position Indication, Exercise/2 Years	
PXS-PL-V122A	IRWST Injection A Check	Check	Maintain Open Maintain Close Transfer Open	Active RCS Pressure Boundary Remote Position	Class 1 Category BC	Remote Position Indication, Exercise/2 Years Check-Initial Open Differential Pressure/2 Years Check Exercise/Refueling Shutdown	12
PXS-PL-V122B	IRWST Injection B Check	Check	Maintain Open Maintain Close Transfer Open	Active RCS Pressure Boundary Remote Position	Class 1 Category BC	Remote Position Indication, Exercise/2 Years Check-Initial Open Differential Pressure/2 Years Check Exercise/Refueling Shutdown	12
PXS-PL-V123A	IRWST Injection A Isolation	Squib	Maintain Open Maintain Close Transfer Open	Active RCS Pressure Boundary Remote Position	Class 1 Category D	Remote Position Indication, Alternate/2 Years Charge Test Fire/20% in 2 Years	5
PXS-PL-V123B	IRWST Injection B Isolation	Squib	Maintain Open Maintain Close Transfer Open	Active RCS Pressure Boundary Remote Position	Class 1 Category D	Remote Position Indication, Alternate/2 Years Charge Test Fire/20% in 2 Years	5
PXS-PL-V124A	IRWST Injection A Check	Check	Maintain Open Maintain Close Transfer Open	Active RCS Pressure Boundary Remote Position	Class 1 Category BC	Remote Position Indication, Exercise/2 Years Check-Initial Open Differential Pressure/2 Years Check Exercise/Refueling Shutdown	12
PXS-PL-V124B	IRWST Injection B Check	Check	Maintain Open Maintain Close Transfer Open	Active RCS Pressure Boundary Remote Position	Class 1 Category BC	Remote Position Indication, Exercise/2 Years Check-Initial Open Differential Pressure/2 Years Check Exercise/Refueling Shutdown	12
PXS-PL-V125A	IRWST Injection A Isolation	Squib	Maintain Open Maintain Close Transfer Open	Active RCS Pressure Boundary Remote Position	Class 1 Category D	Remote Position Indication, Alternate/2 Years Charge Test Fire/20% in 2 Years	5
PXS-PL-V125B	IRWST Injection B Isolation	Squib	Maintain Open Maintain Close Transfer Open	Active RCS Pressure Boundary Remote Position	Class 1 Category D	Remote Position Indication, Alternate/2 Years Charge Test Fire/20% in 2 Years	5
PXS-PL-V130A	IRWST Gutter Isolation	Remote AO GLOBE	Maintain Close Transfer Close	Active-to-Failed Remote Position	Class 3 Category B	Remote Position Indication, Exercise/2 Years Exercise Full Stroke/Quarterly Operability Test	31
PXS-PL-V130B	IRWST Gutter Isolation	Remote AO GLOBE	Maintain Close Transfer Close	Active-to-Failed Remote Position	Class 3 Category B	Remote Position Indication, Exercise/2 Years Exercise Full Stroke/Quarterly Operability Test	31
PXS-PL-V208A	RNS Suction Leak Test	Manual	Maintain Close	Containment Isolation Safety Seat Leakage	Class 2 Category A	Containment Isolation Leak Test/2 Years	
RCS-PL-V001A	First Stage Automatic Depressurization System	Remote MO GLOBE	Maintain Open Maintain Close Transfer Open	Active RCS Pressure Boundary Remote Position	Class 1 Category B	Remote Position Indication, Exercise/2 Years Exercise Full Stroke/Cold Shutdown Operability Test	3, 31

Table 3.9-16 (Sheet 11 of 21)

VALVE INSERVICE TEST REQUIREMENTS

Valve Tag Number	Description[1]	Valve/Actuator Type	Safety-Related Missions	Safety Functions[2]	ASME Class/ IST Category	Inservice Testing Type and Frequency	IST Notes
RCS-PL-V001B	First Stage Automatic Depressurization System	Remote MO GLOBE	Maintain Open Maintain Close Transfer Open	Active RCS Pressure Boundary Remote Position	Class 1 Category B	Remote Position Indication, Exercise/2 Years Exercise Full Stroke/Cold Shutdown Operability Test	3, 31
RCS-PL-V002A	Second Stage Automatic Depressurization System	Remote MO GLOBE	Maintain Open Maintain Close Transfer Open	Active RCS Pressure Boundary Remote Position	Class 1 Category B	Remote Position Indication, Exercise/2 Years Exercise Full Stroke/Cold Shutdown Operability Test	3, 31
RCS-PL-V002B	Second Stage Automatic Depressurization System	Remote MO GLOBE	Maintain Open Maintain Close Transfer Open	Active RCS Pressure Boundary Remote Position	Class 1 Category B	Remote Position Indication, Exercise/2 Years Exercise Full Stroke/Cold Shutdown Operability Test	3, 31
RCS-PL-V003A	Third Stage Automatic Depressurization System	Remote MO GLOBE	Maintain Open Maintain Close Transfer Open	Active RCS Pressure Boundary Remote Position	Class 1 Category B	Remote Position Indication, Exercise/2 Years Exercise Full Stroke/Cold Shutdown Operability Test	3, 31
RCS-PL-V003B	Third Stage Automatic Depressurization System	Remote MO GLOBE	Maintain Open Maintain Close Transfer Open	Active RCS Pressure Boundary Remote Position	Class 1 Category B	Remote Position Indication, Exercise/2 Years Exercise Full Stroke/Cold Shutdown Operability Test	3, 31
RCS-PL-V004A	Fourth Stage Automatic Depressurization System	Squib	Maintain Open Maintain Close Transfer Open	Active RCS Pressure Boundary Remote Position	Class 1 Category D	Remote Position Indication, Alternate/2 Years Charge Test Fire/20% in 2 Years	5
RCS-PL-V004B	Fourth Stage Automatic Depressurization System	Squib	Maintain Open Maintain Close Transfer Open	Active RCS Pressure Boundary Remote Position	Class 1 Category D	Remote Position Indication, Alternate/2 Years Charge Test Fire/20% in 2 Years	5
RCS-PL-V004C	Fourth Stage Automatic Depressurization System	Squib	Maintain Open Maintain Close Transfer Open	Active RCS Pressure Boundary Remote Position	Class 1 Category D	Remote Position Indication, Alternate/2 Years Charge Test Fire/20% in 2 Years	5
RCS-PL-V004D	Fourth Stage Automatic Depressurization System	Squib	Maintain Open Maintain Close Transfer Open	Active RCS Pressure Boundary Remote Position	Class 1 Category D	Remote Position Indication, Alternate/2 Years Charge Test Fire/20% in 2 Years	5
RCS-PL-V005A	Pressurizer Safety Valve	Relief	Maintain Close Transfer Open Transfer Close	Active RCS Pressure Boundary Remote Position	Class 1 Category BC	Remote Position Indication, Alternate/2 Years Class 1 Relief Valve Tests/5 Years and 20% in 2 Years	7
RCS-PL-V005B	Pressurizer Safety Valve	Relief	Maintain Close Transfer Open Transfer Close	Active RCS Pressure Boundary Remote Position	Class 1 Category BC	Remote Position Indication, Alternate/2 Years Class 1 Relief Valve Tests/5 Years and 20% in 2 Years	7
RCS-PL-V010A	Automatic Depressurization System Discharge Header A Vacuum Relief	Relief	Transfer Open	Active	Class 3 Category BC	Class 2/3 Relief Valve Tests/10 Years and 20% in 4 Years	
RCS-PL-V010B	Automatic Depressurization System Discharge Header B Vacuum Relief	Relief	Transfer Open	Active	Class 3 Category BC	Class 2/3 Relief Valve Tests/10 Years and 20% in 4 Years	

Table 3.9-16 (Sheet 12 of 21)

VALVE INSERVICE TEST REQUIREMENTS

Valve Tag Number	Description[1]	Valve/Actuator Type	Safety-Related Missions	Safety Functions[2]	ASME Class/ IST Category	Inservice Testing Type and Frequency	IST Notes
RCS-PL-V011A	First Stage Automatic Depressurization System Isolation	Remote MO GATE	Maintain Open Maintain Close Transfer Open	Active RCS Pressure Boundary Remote Position	Class 1 Category B	Remote Position Indication, Exercise/2 Years Exercise Full Stroke/Cold Shutdown Operability Test	3, 31
RCS-PL-V011B	First Stage Automatic Depressurization System Isolation	Remote MO GATE	Maintain Open Maintain Close Transfer Open	Active RCS Pressure Boundary Remote Position	Class 1 Category B	Remote Position Indication, Exercise/2 Years Exercise Full Stroke/Cold Shutdown Operability Test	3, 31
RCS-PL-V012A	Second Stage Automatic Depressurization System Isolation	Remote MO GATE	Maintain Open Maintain Close Transfer Open	Active RCS Pressure Boundary Remote Position	Class 1 Category B	Remote Position Indication, Exercise/2 Years Exercise Full Stroke/Cold Shutdown Operability Test	3, 31
RCS-PL-V012B	Second Stage Automatic Depressurization System Isolation	Remote MO GATE	Maintain Open Maintain Close Transfer Open	Active RCS Pressure Boundary Remote Position	Class 1 Category B	Remote Position Indication, Exercise/2 Years Exercise Full Stroke/Cold Shutdown Operability Test	3, 31
RCS-PL-V013A	Third Stage Automatic Depressurization System Isolation	Remote MO GATE	Maintain Open Maintain Close Transfer Open	Active RCS Pressure Boundary Remote Position	Class 1 Category B	Remote Position Indication, Exercise/2 Years Exercise Full Stroke/Cold Shutdown Operability Test	3, 31
RCS-PL-V013B	Third Stage Automatic Depressurization System Isolation	Remote MO GATE	Maintain Open Maintain Close Transfer Open	Active RCS Pressure Boundary Remote Position	Class 1 Category B	Remote Position Indication, Exercise/2 Years Exercise Full Stroke/Cold Shutdown Operability Test	3, 31
RCS-PL-V014A	Fourth Stage Automatic Depressurization System Isolation	Remote MO GATE	Maintain Open	Remote Position	Class 1 Category B	Remote Position Indication, Exercise/2 Years	
RCS-PL-V014B	Fourth Stage Automatic Depressurization System Isolation	Remote MO GATE	Maintain Open	Remote Position	Class 1 Category B	Remote Position Indication, Exercise/2 Years	
RCS-PL-V014C	Fourth Stage Automatic Depressurization System Isolation	Remote MO GATE	Maintain Open	Remote Position	Class 1 Category B	Remote Position Indication, Exercise/2 Years	
RCS-PL-V014D	Fourth Stage Automatic Depressurization System Isolation	Remote MO GATE	Maintain Open	Remote Position	Class 1 Category B	Remote Position Indication, Exercise/2 Years	
RCS-PL-V150A	Reactor Vessel Head Vent	Remote SO GLOBE	Maintain Open Maintain Close Transfer Open	Active-to-Failed RCS Pressure Boundary Remote Position	Class 1 Category B	Remote Position Indication, Exercise/2 Years Exercise Full Stroke/Cold Shutdown Operability Test	4, 31
RCS-PL-V150B	Reactor Vessel Head Vent	Remote SO GLOBE	Maintain Open Maintain Close Transfer Open	Active-to-Failed RCS Pressure Boundary Remote Position	Class 1 Category B	Remote Position Indication, Exercise/2 Years Exercise Full Stroke/Cold Shutdown Operability Test	4, 31
RCS-PL-V150C	Reactor Vessel Head Vent	Remote SO GLOBE	Maintain Open Maintain Close Transfer Open	Active-to-Failed RCS Pressure Boundary Remote Position	Class 1 Category B	Remote Position Indication, Exercise/2 Years Exercise Full Stroke/Cold Shutdown Operability Test	4, 31
RCS-PL-V150D	Reactor Vessel Head Vent	Remote SO GLOBE	Maintain Open Maintain Close Transfer Open	Active-to-Failed RCS Pressure Boundary Remote Position	Class 1 Category B	Remote Position Indication, Exercise/2 Years Exercise Full Stroke/Cold Shutdown Operability Test	4, 31

Table 3.9-16 (Sheet 13 of 21)

VALVE INSERVICE TEST REQUIREMENTS

	Valve Tag Number	Description[1]	Valve/Actuator Type	Safety-Related Missions	Safety Functions[2]	ASME Class/ IST Category	Inservice Testing Type and Frequency	IST Notes
	RCS-K03	Safety Valve Discharge Chamber Rupture Disk	Relief	Transfer Open	Active	Class 3 Category BC	Inspect and Replace/5 Years	
NRC 148	RCS-K04	Safety Valve Discharge Chamber Rupture Disk	Relief	Transfer Open	Active	Class 3 Category BC	Inspect and Replace/5 Years	
	RNS-PL-V001A	RNS Hot Leg Suction Isolation - Inner	Remote MO GATE	Maintain Close Transfer Close	Active RCS Pressure Boundary Safety Seat Leakage Remote Position	Class 1 Category A	Remote Position Indication, Exercise/2 Years Exercise Full Stroke/Cold Shutdown Pressure Isolation Leak Test/2 Years~~Refueling Shutdown~~ Operability Test	15, 31
NRC 148	RNS-PL-V001B	RNS Hot Leg Suction Isolation - Inner	Remote MO GATE	Maintain Close Transfer Close	Active RCS Pressure Boundary Safety Seat Leakage Remote Position	Class 1 Category A	Remote Position Indication, Exercise/2 Years Exercise Full Stroke/Cold Shutdown Pressure Isolation Leak Test/2 Years~~Refueling Shutdown~~ Operability Test	15, 31
NRC 148	RNS-PL-V002A	RNS Hot Leg Suction and Containment Isolation - Outer	Remote MO GATE	Maintain Close Transfer Close	Active RCS Pressure Boundary Containment Isolation Safety Seat Leakage Remote Position	Class 1 Category A	Remote Position Indication, Exercise/2 Years Exercise Full Stroke/Cold Shutdown Pressure Isolation Leak Test/2 Years~~Refueling Shutdown~~ Operability Test	15, 16, 31
NRC 148	RNS-PL-V002B	RNS Hot Leg Suction and Containment Isolation - Outer	Remote MO GATE	Maintain Close Transfer Close	Active RCS Pressure Boundary Containment Isolation Safety Seat Leakage Remote Position	Class 1 Category A	Remote Position Indication, Exercise/2 Years Exercise Full Stroke/Cold Shutdown Pressure Isolation Leak Test/2 Years~~Refueling Shutdown~~ Operability Test	15, 16, 31
NRC 148	RNS-PL-V003A	RCS Pressure Boundary Valve Thermal Relief	Check	Maintain Close Transfer Open Transfer Close	Active RCS Pressure Boundary	Class 2 Category BC	Check Exercise/Refueling Shutdown	23
NRC 148	RNS-PL-V003B	RCS Pressure Boundary Valve Thermal Relief	Check	Maintain Close Transfer Open Transfer Close	Active RCS Pressure Boundary	Class 2 Category BC	Check Exercise/Refueling Shutdown	23
NRC 148	RNS-PL-V011	RNS Discharge Containment Isolation Valve - ORC	Remote MO GATE	Maintain Close Transfer Close	Active Containment Isolation Safety Seat Leakage Remote Position	Class 2 Category A	Remote Position Indication, Exercise/2 Years Containment Isolation Leak Test Exercise Full Stroke/Quarterly Operability Test	27, 31
NRC 148	RNS-PL-V013	RNS Discharge Containment Isolation - IRC	Check	Maintain Close Transfer Open Transfer Close	Active Containment Isolation Safety Seat Leakage	Class 2 Category AC	Containment Isolation Leak Test Check Exercise/Quarterly	27
NRC 148	RNS-PL-V015A	RNS Discharge RCS Pressure Boundary	Check	Maintain Close Transfer Close	Active RCS Pressure Boundary Safety Seat Leakage	Class 1 Category AC	Check Exercise/Refueling Shutdown Pressure Isolation Leak Test/2 Years~~Refueling Shutdown~~	24

Table 3.9-16 (Sheet 14 of 21)

VALVE INSERVICE TEST REQUIREMENTS

	Valve Tag Number	Description[1]	Valve/Actuator Type	Safety-Related Missions	Safety Functions[2]	ASME Class/ IST Category	Inservice Testing Type and Frequency	IST Notes
NRC 148	RNS-PL-V015B	RNS Discharge RCS Pressure Boundary	Check	Maintain Close Transfer Close	Active RCS Pressure Boundary Safety Seat Leakage	Class 1 Category AC	Check Exercise/Refueling Shutdown Pressure Isolation Leak Test/2 Years~~Refueling Shutdown~~	24
NRC 148	RNS-PL-V017A	RNS Discharge RCS Pressure Boundary	Check	Maintain Close Transfer Open Transfer Close	Active RCS Pressure Boundary Safety Seat Leakage	Class 1 Category AC	Check Exercise/Refueling Shutdown Pressure Isolation Leak Test/2 Years~~Refueling Shutdown~~	24
NRC 148	RNS-PL-V017B	RNS Discharge RCS Pressure Boundary	Check	Maintain Close Transfer Open Transfer Close	Active RCS Pressure Boundary Safety Seat Leakage	Class 1 Category AC	Check Exercise/Refueling Shutdown Pressure Isolation Leak Test/2 Years~~Refueling Shutdown~~	24
NRC 148	RNS-PL-V021	RNS Hot Leg Suction Pressure Relief	Relief	Maintain Close Transfer Open Transfer Close	Active Containment Isolation Safety Seat Leakage	Class 2 Category AC	Containment Isolation Leak Test/2 Years Class 2/3 Relief Valve Tests/10 Years and 20% in 4 Years	17, 27
NRC 148	RNS-PL-V022	RNS Suction Header Containment Isolation - ORC	Remote MO GATE	Maintain Close Transfer Close	Active Containment Isolation Safety Seat Leakage Remote Position	Class 2 Category A	Remote Position Indication, Exercise/2 Years Containment Isolation Leak Test Exercise Full Stroke/Quarterly Operability Test	27, 31
NRC 148	RNS-PL-V023	RNS Suction from IRWST - Containment Isolation	Remote MO GATE	Maintain Close Transfer Close	Active Containment Isolation Safety Seat Leakage Remote Position	Class 2 Category A	Remote Position Indication, Exercise/2 Years Containment Isolation Leak Test Exercise Full Stroke/Quarterly Operability Test	17, 27, 31
NRC 148	RNS-PL-V045	RNS Pump Discharge Relief	Relief	Maintain Close Transfer Open Transfer Close	Active	Class 3 Category BC	Class 2/3 Relief Valve Tests/10 Years and 20% in 4 Years	
NRC 148	RNS-PL-V046	RNS Heat Exchanger A Channel Head Drain Isolation	Manual	Maintain Open Transfer Open	Active	Class 3 Category B	Exercise Full Stroke/2 Years~~quarterly~~	37
	RNS-PL-V061	RNS Return from CVS - Containment Isolation	Remote AO GLOBE	Maintain Close Transfer Close	Active-to-Failed Containment Isolation Safety Seat Leakage Remote Position	Class 2 Category A	Remote Position Indication, Exercise/2 Years Containment Isolation Leak Test Exercise Full Stroke/Quarterly Operability Test	27, 31
NRC 148	SFS-PL-V034	SFS Suction Line Containment Isolation	Remote MO Butterfly	Maintain Close Transfer Close	Active Containment Isolation Safety Seat Leakage Remote Position	Class 2 Category A	Remote Position Indication, Exercise/2 Years Containment Isolation Leak Test Exercise Full Stroke/Quarterly Operability Test	27, 31
NRC 148	SFS-PL-V035	SFS Suction Line Containment Isolation	Remote MO Butterfly	Maintain Close Transfer Close	Active Containment Isolation Safety Seat Leakage Remote Position	Class 2 Category A	Remote Position Indication, Exercise/2 Years Containment Isolation Leak Test Exercise Full Stroke/Quarterly Operability Test	27, 31

Table 3.9-16 (Sheet 15 of 21)

VALVE INSERVICE TEST REQUIREMENTS

	Valve Tag Number	Description[1]	Valve/Actuator Type	Safety-Related Missions	Safety Functions[2]	ASME Class/ IST Category	Inservice Testing Type and Frequency	IST Notes
NRC 148	SFS-PL-V037	SFS Discharge Line Containment Isolation	Check	Maintain Close Transfer Close Transfer Open	Active Containment Isolation Safety Seat Leakage	Class 2 Category AC	Containment Isolation Leak Test Check Exercise/Quarterly	27
NRC 148	SFS-PL-V038	SFS Discharge Line Containment Isolation	Remote MO Butterfly	Maintain Close Transfer Close	Active Containment Isolation Safety Seat Leakage Remote Position	Class 2 Category A	Remote Position Indication, Exercise/2 Years Containment Isolation Leak Test Exercise Full Stroke/Quarterly Operability Test	27, 31
	SFS-PL-V066	Spent Fuel Pool to Cask Washdown Pit Isolation	Manual	Transfer Open Transfer Close Maintain Close	Active	Class 3 Category B	Exercise Full Stroke/2 Years	37
NRC 148	SFS-PL-V068	Cask Washdown Pit Drain Isolation	Manual	Transfer Open Transfer Close Maintain Close	Active	Class 3 Category B	Exercise Full Stroke/2 Years	37
	SFS-PL-V071	Refueling Cavity to Steam Generator Compartment	Check	Transfer Open Transfer Close Maintain Close	Active	Class 3 Category BC	Check Exercise/Refueling Shutdown	26
NRC 148	SFS-PL-V072	Refueling Cavity to Steam Generator Compartment	Check	Transfer Open Transfer Close Maintain Close	Active	Class 3 Category BC	Check Exercise/Refueling Shutdown	26
NRC 148	SGS-PL-V027A	Power-Operated Relief Valve Block Valve Steam Generator 01	Remote MO GATE	Maintain Close Transfer Close	Active Containment Isolation Remote Position	Class 2 Category B	Remote Position Indication, Exercise/2 Years Exercise Full Stroke/Quarterly Operability Test	31
NRC 148	SGS-PL-V027B	Power-Operated Relief Valve Block Valve Steam Generator 02	Remote MO GATE	Maintain Close Transfer Close	Active Containment Isolation Remote Position	Class 2 Category B	Remote Position Indication, Exercise/2 Years Exercise Full Stroke/Quarterly Operability Test	31
NRC 148	SGS-PL-V030A	Main Steam Safety Valve Steam Generator 01	Relief	Maintain Close Transfer Open Transfer Close	Active Containment Isolation Remote Position	Class 2 Category BC	Remote Position Indication, Alternate/2 Years Class 2/3 Relief Valve Tests/5 Years and 20% in 2 Years	7
NRC 148	SGS-PL-V030B	Main Steam Safety Valve Steam Generator 02	Relief	Maintain Close Transfer Open Transfer Close	Active Containment Isolation Remote Position	Class 2 Category BC	Remote Position Indication, Alternate/2 Years Class 2/3 Relief Valve Tests/5 Years and 20% in 2 Years	7
NRC 148	SGS-PL-V031A	Main Steam Safety Valve Steam Generator 01	Relief	Maintain Close Transfer Open Transfer Close	Active Containment Isolation Remote Position	Class 2 Category BC	Remote Position Indication, Alternate/2 Years Class 2/3 Relief Valve Tests/5 Years and 20% in 2 Years	7
NRC 148	SGS-PL-V031B	Main Steam Safety Valve Steam Generator 02	Relief	Maintain Close Transfer Open Transfer Close	Active Containment Isolation Remote Position	Class 2 Category BC	Remote Position Indication, Alternate/2 Years Class 2/3 Relief Valve Tests/5 Years and 20% in 2 Years	7

Table 3.9-16 (Sheet 16 of 21)

VALVE INSERVICE TEST REQUIREMENTS

Valve Tag Number	Description[1]	Valve/Actuator Type	Safety-Related Missions	Safety Functions[2]	ASME Class/ IST Category	Inservice Testing Type and Frequency	IST Notes
SGS-PL-V032A	Main Steam Safety Valve Steam Generator 01	Relief	Maintain Close Transfer Open Transfer Close	Active Containment Isolation Remote Position	Class 2 Category BC	Remote Position Indication, Alternate/2 Years Class 2/3 Relief Valve Tests/5 Years and 20% in 2 Years	7
SGS-PL-V032B	Main Steam Safety Valve Steam Generator 02	Relief	Maintain Close Transfer Open Transfer Close	Active Containment Isolation Remote Position	Class 2 Category BC	Remote Position Indication, Alternate/2 Years Class 2/3 Relief Valve Tests/5 Years and 20% in 2 Years	7
SGS-PL-V033A	Main Steam Safety Valve Steam Generator 01	Relief	Maintain Close Transfer Open Transfer Close	Active Containment Isolation Remote Position	Class 2 Category BC	Remote Position Indication, Alternate/2 Years Class 2/3 Relief Valve Tests/5 Years and 20% in 2 Years	7
SGS-PL-V033B	Main Steam Safety Valve Steam Generator 02	Relief	Maintain Close Transfer Open Transfer Close	Active Containment Isolation Remote Position	Class 2 Category BC	Remote Position Indication, Alternate/2 Years Class 2/3 Relief Valve Tests/5 Years and 20% in 2 Years	7
SGS-PL-V034A	Main Steam Safety Valve Steam Generator 01	Relief	Maintain Close Transfer Open Transfer Close	Active Containment Isolation Remote Position	Class 2 Category BC	Remote Position Indication, Alternate/2 Years Class 2/3 Relief Valve Tests/5 Years and 20% in 2 Years	7
SGS-PL-V034B	Main Steam Safety Valve Steam Generator 02	Relief	Maintain Close Transfer Open Transfer Close	Active Containment Isolation Remote Position	Class 2 Category BC	Remote Position Indication, Alternate/2 Years Class 2/3 Relief Valve Tests/5 Years and 20% in 2 Years	7
SGS-PL-V035A	Main Steam Safety Valve Steam Generator 01	Relief	Maintain Close Transfer Open Transfer Close	Active Containment Isolation Remote Position	Class 2 Category BC	Remote Position Indication, Alternate/2 Years Class 2/3 Relief Valve Tests/5 Years and 20% in 2 Years	7
SGS-PL-V035B	Main Steam Safety Valve Steam Generator 02	Relief	Maintain Close Transfer Open Transfer Close	Active Containment Isolation Remote Position	Class 2 Category BC	Remote Position Indication, Alternate/2 Years Class 2/3 Relief Valve Tests/5 Years and 20% in 2 Years	7
SGS-PL-V036A	Steam Line Condensate Drain Isolation	Remote AO GLOBE	Maintain Close Transfer Close	Active-to-Failed Containment Isolation Remote Position	Class 2 Category B	Remote Position Indication, Exercise/2 Years Exercise Full Stroke/Quarterly Operability Test	31
SGS-PL-V036B	Steam Line Condensate Drain Isolation	Remote AO GLOBE	Maintain Close Transfer Close	Active-to-Failed Containment Isolation Remote Position	Class 2 Category B	Remote Position Indication, Exercise/2 Years Exercise Full Stroke/Quarterly Operability Test	31
SGS-PL-V040A	Main Steam Line Isolation	Remote Pneumatic Hydraulic GATE	Maintain Close Transfer Close	Active-to-Failed Containment Isolation Remote Position	Class 2 Category B	Remote Position Indication, Exercise/2 Years ~~Exercise Part Stroke/Quarterly~~ Exercise Full Stroke/Cold Shutdown Operability Test	20, 31
SGS-PL-V040B	Main Steam Line Isolation	Remote Pneumatic Hydraulic GATE	Maintain Close Transfer Close	Active-to-Failed Containment Isolation Remote Position	Class 2 Category B	Remote Position Indication, Exercise/2 Years ~~Exercise Part Stroke/Quarterly~~ Exercise Full Stroke/Cold Shutdown Operability Test	20, 31

Table 3.9-16 (Sheet 17 of 21)

VALVE INSERVICE TEST REQUIREMENTS

	Valve Tag Number	Description[1]	Valve/Actuator Type	Safety-Related Missions	Safety Functions[2]	ASME Class/ IST Category	Inservice Testing Type and Frequency	IST Notes
	SGS-PL-V057A	Main Feedwater Isolation	Remote Pneumatic Hydraulic GATE	Maintain Close Transfer Close	Active-to-Failed Containment Isolation Remote Position	Class 2 Category B	Remote Position Indication, Exercise/2 Years ~~Exercise Part Stroke/Quarterly~~ Exercise Full Stroke/Cold Shutdown Operability Test	20, 31
NRC 148	SGS-PL-V057B	Main Feedwater Isolation	Remote Pneumatic Hydraulic GATE	Maintain Close Transfer Close	Active-to-Failed Containment Isolation Remote Position	Class 2 Category B	Remote Position Indication, Exercise/2 Years ~~Exercise Part Stroke/Quarterly~~ Exercise Full Stroke/Cold Shutdown Operability Test	20, 31
	SGS-PL-V067A	Startup Feedwater Isolation	Remote MO GATE	Maintain Close Transfer Close	Active Containment Isolation Remote Position	Class 2 Category B	Remote Position Indication, Exercise/2 Years Exercise Full Stroke/Quarterly Operability Test	31
NRC 148	SGS-PL-V067B	Startup Feedwater Isolation	Remote MO GATE	Maintain Close Transfer Close	Active Containment Isolation Remote Position	Class 2 Category B	Remote Position Indication, Exercise/2 Years Exercise Full Stroke/Quarterly Operability Test	31
NRC 148	SGS-PL-V074A	Steam Generator Blowdown Isolation	Remote AO GLOBE	Maintain Close Transfer Close	Active-to-Failed Containment Isolation Remote Position	Class 2 Category B	Remote Position Indication, Exercise/2 Years Exercise Full Stroke/Quarterly Operability Test	31
NRC 148	SGS-PL-V074B	Steam Generator Blowdown Isolation	Remote AO GLOBE	Maintain Close Transfer Close	Active-to-Failed Containment Isolation Remote Position	Class 2 Category B	Remote Position Indication, Exercise/2 Years Exercise Full Stroke/Quarterly Operability Test	31
NRC 148	SGS-PL-V075A	Steam Generator Series Blowdown Isolation	Remote AO GLOBE	Maintain Close Transfer Close	Active-to-Failed Remote Position	Class 3 Category B	Remote Position Indication, Exercise/2 Years Exercise Full Stroke/Quarterly Operability Test	31
NRC 148	SGS-PL-V075B	Steam Generator Series Blowdown Isolation	Remote AO GLOBE	Maintain Close Transfer Close	Active-to-Failed Remote Position	Class 3 Category B	Remote Position Indication, Exercise/2 Years Exercise Full Stroke/Quarterly Operability Test	31
NRC 148	SGS-PL-V086A	Steam Line Condensate Drain Control	Remote AO GLOBE	Maintain Close Transfer Close	Active-to-Failed Remote Position	Class 3 Category B	Remote Position Indication, Exercise/2 Years Exercise Full Stroke/Quarterly Operation Operability Test	31
NRC 148	SGS-PL-V086B	Steam Line Condensate Drain Control	Remote AO GLOBE	Maintain Close Transfer Close	Active-to-Failed Remote Position	Class 3 Category B	Remote Position Indication, Exercise/2 Years Exercise Full Stroke/Quarterly Operability Test	31
NRC 148	SGS-PL-V233A	Power-Operated Relief Valve	Remote AO GLOBE	Maintain Close Transfer Close	Active-to-Failed Remote Position	Class 3 Category B	Remote Position Indication, Exercise/2 Years Exercise Full Stroke/Quarterly Operability Test	31
NRC 148	SGS-PL-V233B	Power-Operated Relief Valve	Remote AO GLOBE	Maintain Close Transfer Close	Active-to-Failed Remote Position	Class 3 Category B	Remote Position Indication, Exercise/2 Years Exercise Full Stroke/Quarterly Operability Test	31

Table 3.9-16 (Sheet 18 of 21)

VALVE INSERVICE TEST REQUIREMENTS

Valve Tag Number	Description[1]	Valve/Actuator Type	Safety-Related Missions	Safety Functions[2]	ASME Class/ IST Category	Inservice Testing Type and Frequency	IST Notes
SGS-PL-V240A	Main Steam Isolation Valve Bypass Isolation	Remote AO GLOBE	Maintain Close Transfer Close	Active-to-Failed Containment Isolation Remote Position	Class 2 Category B	Remote Position Indication, Exercise/2 Years Exercise Full Stroke/Quarterly Operability Test	31
SGS-PL-V240B	Main Steam Isolation Valve Bypass Isolation	Remote AO GLOBE	Maintain Close Transfer Close	Active-to-Failed Containment Isolation Remote Position	Class 2 Category B	Remote Position Indication, Exercise/2 Years Exercise Full Stroke/Quarterly Operability Test	31
SGS-PL-V250A	Main Feedwater Control	Remote AO GLOBE	Maintain Close Transfer Close	Active-to-Failed Remote Position	Class 3 Category B	Remote Position Indication, Exercise/2 Years Exercise Part Stroke/Quarterly Operation Exercise Full Stroke/Cold Shutdown Operability Test	25, 31
SGS-PL-V250B	Main Feedwater Control	Remote AO GLOBE	Maintain Close Transfer Close	Active-to-Failed Remote Position	Class 3 Category B	Remote Position Indication, Exercise/2 Years Exercise Part Stroke/Quarterly Operation Exercise Full Stroke/Cold Shutdown Operability Test	25, 31
SGS-PL-V255A	Startup Feedwater Control	Remote AO GLOBE	Maintain Close Transfer Close	Active-to-Failed Remote Position	Class 3 Category B	Remote Position Indication, Exercise/2 Years Exercise Full Stroke/Quarterly Operability Test	31
SGS-PL-V255B	Startup Feedwater Control	Remote AO GLOBE	Maintain Close Transfer Close	Active-to-Failed Remote Position	Class 3 Category B	Remote Position Indication, Exercise/2 Years Exercise Full Stroke/Quarterly Operability Test	31
VBS-PL-V186	MCR Supply Air Isolation Valve	Remote Electric Hydraulic Butterfly	Maintain Close Transfer Close	Active-to-Failed Remote Position	Class 3 Category B	Remote Position Indication, Exercise/2 Years Exercise Full Stroke/Quarterly Operability Test	31
VBS-PL-V187	MCR Supply Air Isolation Valve	Remote Electric Hydraulic Butterfly	Maintain Close Transfer Close	Active-to-Failed Remote Position	Class 3 Category B	Remote Position Indication, Exercise/2 Years Exercise Full Stroke/Quarterly Operability Test	31
VBS-PL-V188	MCR Return Air Isolation Valve	Remote Electric Hydraulic Butterfly	Maintain Close Transfer Close	Active-to-Failed Remote Position	Class 3 Category B	Remote Position Indication, Exercise/2 Years Exercise Full Stroke/Quarterly Operability Test	31
VBS-PL-V189	MCR Return Air Isolation Valve	Remote Electric Hydraulic Butterfly	Maintain Close Transfer Close	Active-to-Failed Remote Position	Class 3 Category B	Remote Position Indication, Exercise/2 Years Exercise Full Stroke/Quarterly Operability Test	31
VBS-PL-V190	MCR Exhaust Air Isolation Valve	Remote Electric Hydraulic Butterfly	Maintain Close Transfer Close	Active-to-Failed Remote Position	Class 3 Category B	Remote Position Indication, Exercise/2 Years Exercise Full Stroke/Quarterly Operability Test	31

Table 3.9-16 (Sheet 19 of 21)

VALVE INSERVICE TEST REQUIREMENTS

Valve Tag Number	Description[1]	Valve/Actuator Type	Safety-Related Missions	Safety Functions[2]	ASME Class/ IST Category	Inservice Testing Type and Frequency	IST Notes
VBS-PL-V191	MCR Exhaust Air Isolation Valve	Remote Electric Hydraulic Butterfly	Maintain Close Transfer Close	Active-to-Failed Remote Position	Class 3 Category B	Remote Position Indication, Exercise/2 Years Exercise Full Stroke/Quarterly Operability Test	31
VES-PL-V001	Air Delivery Isolation Valve	Manual	Maintain Close Transfer Open Maintain Open	Active	Class 3 Category B	Exercise Full Stroke/2 Years~~Quarterly~~	37
VES-PL-V002A	Pressure Regulating Valve A	Press. Reg.	Throttle Flow	Active	Class 3 Category B	Exercise ~~Full~~ Stroke/Quarterly Operability Test	31, 38
VES-PL-V002B	Pressure Regulating Valve B	Press. Reg.	Throttle Flow	Active	Class 3 Category B	Exercise ~~Full~~ Stroke/Quarterly Operability Test	31, 38
VES-PL-V005A	Air Delivery Isolation Valve A	Remote SO GLOBE	Maintain Open Transfer Open	Active-to-Failed	Class 3 Category B	Remote Position Indication, Exercise/2 Years Exercise Full Stroke/Quarterly Operability Test	31
VES-PL-V005B	Air Delivery Isolation Valve B	Remote SO GLOBE	Maintain Open Transfer Open	Active-to-Failed	Class 3 Category B	Remote Position Indication, Exercise/2 Years Exercise Full Stroke/Quarterly Operability Test	31
VES-PL-V022A	Pressure Relief Isolation Valve A	Remote AO Butterfly	Maintain Open Transfer Open	Active-to-Failed	Class 3 Category B	Remote Position Indication, Exercise/2 Years Exercise Full Stroke/Quarterly Operability Test	31
VES-PL-V022B	Pressure Relief Isolation Valve B	Remote AO Butterfly	Maintain Open Transfer Open	Active-to-Failed	Class 3 Category B	Remote Position Indication, Exercise/2 Years Exercise Full Stroke/Quarterly Operability Test	31
VES-PL-V040A	Air Tank Safety Relief Valve A	Relief	Maintain Close Transfer Open	Active	Class 3 Category BC	Class 2/3 Relief Valve Tests/10 Years and 20% in 4 Years	
VES-PL-V040B	Air Tank Safety Relief Valve B	Relief	Maintain Close Transfer Open	Active	Class 3 Category BC	Class 2/3 Relief Valve Tests/10 Years and 20% in 4 Years	
VES-PL-V041A	Air Tank Safety Relief Valve A	Relief	Maintain Close Transfer Open	Active	Class 3 Category BC	Class 2/3 Relief Valve Tests/10 Years and 20% in 4 Years	
VES-PL-V041B	Air Tank Safety Relief Valve B	Relief	Maintain Close Transfer Open	Active	Class 3 Category BC	Class 2/3 Relief Valve Tests/10 Years and 20% in 4 Years	
VES-PL-V044	Main Air Flowpath Isolation Valve	Manual	Maintain Close Transfer Open	Active	Class 3 Category B	Exercise Full Stroke/2 Years~~Quarterly~~	37

Table 3.9-16 (Sheet 20 of 21)

VALVE INSERVICE TEST REQUIREMENTS

	Valve Tag Number	Description[1]	Valve/Actuator Type	Safety-Related Missions	Safety Functions[2]	ASME Class/ IST Category	Inservice Testing Type and Frequency	IST Notes
NRC 148	VFS-PL-V003	Containment Purge Inlet Containment Isolation Valve	Remote AO Butterfly	Maintain Close Transfer Close	Active-to-Failed Containment Isolation Safety Seat Leakage Remote Position	Class 2 Category A	Remote Position Indication, Exercise/2 Years Containment Isolation Leak Test Exercise Full Stroke/Quarterly Operability Test	27, 31
NRC 148	VFS-PL-V004	Containment Purge Inlet Containment Isolation Valve	Remote AO Butterfly	Maintain Close Transfer Close	Active-to-Failed Containment Isolation Safety Seat Leakage Remote Position	Class 2 Category A	Remote Position Indication, Exercise/2 Years Containment Isolation Leak Test Exercise Full Stroke/Quarterly Operability Test	27, 31
NRC 148	VFS-PL-V009	Containment Purge Discharge Containment Isolation Valve	Remote AO Butterfly	Maintain Close Transfer Close	Active-to-Failed Containment Isolation Safety Seat Leakage Remote Position	Class 2 Category A	Remote Position Indication, Exercise/2 Years Containment Isolation Leak Test Exercise Full Stroke/Quarterly Operability Test	27, 31
NRC 148	VFS-PL-V010	Containment Purge Discharge Containment Isolation Valve	Remote AO Butterfly	Maintain Close Transfer Close	Active-to-Failed Containment Isolation Safety Seat Leakage Remote Position	Class 2 Category A	Remote Position Indication, Exercise/2 Years Containment Isolation Leak Test Exercise Full Stroke/Quarterly Operability Test	27, 31
NRC 148	VWS-PL-V058	Fan Coolers Supply Containment Isolation	Remote AO Butterfly	Maintain Close Transfer Close	Active-to-Failed Containment Isolation Safety Seat Leakage Remote Position	Class 2 Category A	Remote Position Indication, Exercise/2 Years Containment Isolation Leak Test Exercise Full Stroke/Quarterly Operability Test	27, 28, 31
NRC 148	VWS-PL-V062	Fan Coolers Supply Containment Isolation	Check	Maintain Close Transfer Close	Active Containment Isolation Safety Seat Leakage	Class 2 Category AC	Containment Isolation Leak Test Check Exercise/Quarterly	27, 28
NRC 148	VWS-PL-V082	Fan Coolers Return Containment Isolation	Remote AO Butterfly	Maintain Close Transfer Close	Active-to-Failed Containment Isolation Safety Seat Leakage Remote Position	Class 2 Category A	Remote Position Indication, Exercise/2 Years Containment Isolation Leak Test Exercise Full Stroke/Quarterly Operability Test	27, 28, 31
NRC 148	VWS-PL-V086	Fan Coolers Return Containment Isolation	Remote AO Butterfly	Maintain Close Transfer Close	Active-to-Failed Containment Isolation Safety Seat Leakage Remote Position	Class 2 Category A	Remote Position Indication, Exercise/2 Years Containment Isolation Leak Test Exercise Full Stroke/Quarterly Operability Test	27, 28, 31
NRC 148	WLS-PL-V055	Sump Discharge Containment Isolation IRC	Remote AO Plug	Maintain Close Transfer Close	Active-to-Failed Containment Isolation Safety Seat Leakage Remote Position	Class 2 Category A	Remote Position Indication, Exercise/2 Years Containment Isolation Leak Test Exercise Full Stroke/Quarterly Operation Operability Test	27, 31

Table 3.9-16 (Sheet 21 of 21)

VALVE INSERVICE TEST REQUIREMENTS

NRC 148

Valve Tag Number	Description[1]	Valve/Actuator Type	Safety-Related Missions	Safety Functions[2]	ASME Class/ IST Category	Inservice Testing Type and Frequency	IST Notes
WLS-PL-V057	Sump Discharge Containment Isolation ORC	Remote AO PLUG	Maintain Close Transfer Close	Active-to-Failed Containment Isolation Safety Seat Leakage Remote Position	Class 2 Category A	Remote Position Indication, Exercise/2 Years Containment Isolation Leak Test Exercise Full Stroke/Quarterly Operation Operability Test	27, 31
WLS-PL-V067	Reactor Coolant Drain Tank Gas Outlet Containment Isolation IRC	Remote AO GLOBE	Maintain Close Transfer Close	Active-to-Failed Containment Isolation Safety Seat Leakage Remote Position	Class 2 Category A	Remote Position Indication, Exercise/2 Years Containment Isolation Leak Test Exercise Full Stroke/Quarterly Operation Operability Test	27, 31
WLS-PL-V068	Reactor Coolant Drain Tank Gas Outlet Containment Isolation ORC	Remote AO GLOBE	Maintain Close Transfer Close	Active-to-Failed Containment Isolation Safety Seat Leakage Remote Position	Class 2 Category A	Remote Position Indication, Exercise/2 Years Containment Isolation Leak Test Exercise Full Stroke/Quarterly Operation Operability Test	27, 31
WLS-PL-V071A	CVS Compartment to Sump	Check	Maintain Close Transfer Close	Active	Class 3 Category BC	Check Exercise/Refueling Shutdown	26
WLS-PL-V071B	PXS A Compartment to Sump	Check	Maintain Close Transfer Close	Active	Class 3 Category BC	Check Exercise/Refueling Shutdown	26
WLS-PL-V071C	PXS B Compartment to Sump	Check	Maintain Close Transfer Close	Active	Class 3 Category BC	Check Exercise/Refueling Shutdown	26
WLS-PL-V072A	CVS Compartment to Sump	Check	Maintain Close Transfer Close	Active	Class 3 Category BC	Check Exercise/Refueling Shutdown	26
WLS-PL-V072B	PXS A Compartment to Sump	Check	Maintain Close Transfer Close	Active	Class 3 Category BC	Check Exercise/Refueling Shutdown	26
WLS-PL-V072C	PXS B Compartment to Sump	Check	Maintain Close Transfer Close	Active	Class 3 Category BC	Check Exercise/Refueling Shutdown	26

Notes:

1. Acronyms:

NRC 148

ADS	automatic depressurization system	PCS	passive containment cooling system	AO	Air Operated
CAS	compressed and instrument air system	PSS	primary sampling system	MO	Motor Operated
CCS	component cooling water system	PXS	passive core cooling system	SO	Solenoid Operated
CVS	chemical and volume control system	RCS	reactor coolant system		
DWS	demineralized water transfer and storage system	RNS	normal residual heat removal system		
FPS	fire protection system	SFS	spent fuel pool cooling system		
IRC	inside reactor containment	SGS	steam generator system		
IRWST	in-containment refueling water storage tank	VBS	nuclear island nonradioactive ventilation system		
MSS	main steam system	VES	main control room emergency habitability system		
MTS	main turbine system	VFS	containment air filtration system		
ORC	outside reactor containment	VWS	central chilled water system		
PCCWST	passive containment cooling water storage tank	WLS	liquid radwaste system		

2. Valves listed as having an active or an active-to-failed safety-related function provide the safety-related valve transfer capabilities identified in the safety-related mission column. Valves having an active-to-failed function will transfer to the position identified in the safety-related mission column on loss of motive power. Valves with an active-to-failed function shall be tested by observing the operation of the actuator upon loss of valve actuating power. This 'fail-safe' requirement is not otherwise shown and is performed during exercise testing. NRC 148

3. This note applies to the ADS stage 1/2/3 valves (RCS-V001A/B, V002A/B, V003A/B, V011A/B, V012A/B, V013A/B). These valves are normally closed to maintain the RCS pressure boundary. These valves have a safety-related function to open following LOCAs to allow safety injection from lower pressure water supplies (accumulators and IRWST). These valves also have beyond design basis functions to depressurize the RCS. These valves have the same design pressure as the RCS and are AP1000 equipment class A. Downstream of the second valve is a lower design pressure and is equipment class C. The discharge of these valves is open to the containment through the IRWST.

   Both ADS valves in each line are normally closed during normal reactor operation in accordance with 10 CFR 50.2 and ANS/ANSI 51.1. If one of these valves is opened, for example for testing, the RCS pressure boundary is not maintained in accordance with the criteria contained in these two documents. In addition, the ADS valve configuration is similar to the normal residual heat removal system suction valve configuration. Even though the RNS suction valve configuration includes a third valve in the high pressure portion of the line, and the first two RNS valves have safety related functions to transfer closed, they are not stroke tested during normal reactor operation to avoid a plant configuration where the mispositioning of one valve would cause a LOCA. Note 15 describes the justification for testing the RNS valves during cold shutdown.

   These ADS valves are tested during cold shutdowns when the RCS pressure is reduced to atmospheric pressure so that mispositioning of a single valve during this IST will not cause a LOCA. Testing these valves every cold shutdown is consistent with the AP1000 PRA which assumes more than 2 cold or refueling shutdowns per year.

4. This note applies to the reactor vessel head vent solenoid valves (RCS-V150A/B/C/D). Exercise testing of these valves at power represents a risk of loss of reactor coolant and depressurization of the RCS if the proper test sequence is not followed. Such testing may also result in the valves developing through seal leaks. Exercise testing of these valves will be performed at cold shutdown.

5. This note applies to squib valves in the RCS and the PXS. The squib valve charge is removed and test fired outside of valve. Squib valves are not exercised for inservice testing. Their position indication sensors will be tested by local inspection.

6. This note applies to the CVS isolation valves (CVS-V001, V002, V003, V080, V081, V082). Closing these valves at power will result in an undesirable temperature transient on the RCS due to the interruption of purification flow. Therefore, quarterly exercise testing will not be performed. Exercise testing will be performed at cold shutdown.

7. This note applies to the pressurizer safety valves (RCS-V005A/B) and to the main steam safety valves (SGS-V030A/B, V031A/B, V032A/B, V033A/B, V034A/B and V035A/B). Since these valves are not exercised for inservice testing, their position indication sensors are tested by local inspection without valve exercise.

8. This note applies to CVS valve (CVS-V081). The safety functions are satisfied by the check valve function of the valve.

9. This note applies to the PXS accumulator check valves (PXS-V028A/B, V029A/B). To exercise these valves, flow must be provided through these valves to the RCS. These valves are not exercised during power operations because the accumulators cannot provide flow to the RCS since they are at a lower pressure. In addition, providing flow to the RCS during power operation would cause undesirable thermal transients on the RCS. During cold shutdowns, a full flow stroke test is impractical because of the potential of adding significant water to the RCS, and lifting the RNS relief valve. There is also a risk of injecting nitrogen into the RCS. A partial stroke test is practical during longer cold shutdowns (≥48 hours in Mode 5). In this test, flow is provided from test connections, through the check valves and into the RCS. Sufficient flow is~~n~~ not available to provide a detectable obturator movement. Full stroke exercise testing of these valves is conducted during refueling shutdowns. NRC 148

10. This note applies to the PXS CMT check valves (PXS-V016A/B, V017A/B). These check valves are biased open valves and are fully open during normal operation. These valves will be verified to be open quarterly. In order to exercise these check valves, significant reverse flow must be provided from the DVI line to the CMT. These valves are not tested during power operations because the test would cause undesirable thermal transients on the portion of the line at ambient temperatures and change the CMT boron concentration These valves are not exercised during cold shutdowns because of changes that would result in the CMT boron concentration. Because this parameter is controlled by Technical Specifications, this testing is impractical. These valves are exercised during refueling when the RCS boron concentration is nearly equal to the CMT concentration and the plant is in a mode where the CMTs are not required to be available by the Technical Specifications.

11. This note applies to the PXS containment recirculation check valves (PXS-V119A/B). Squib valves in line with the check valves prevent the use of IRWST water to test the valves. To exercise these check valves an operator must enter the containment, remove a cover from the recirculation screens, and insert a test device into the recirculation pipe to push open the check valve. The test device is made to interface with the valve without causing valve damage. The test device incorporates loads measuring sensors to measure the initial opening and full open force. These valves are not exercised during power operations because of the need to enter highly radioactive areas and because during this test the recirculation screen is bypassed. These valves are not exercised during cold shutdown operations for the same reasons. These valves are exercised during refueling conditions when the recirculation lines are not required to be available by Technical Specifications LCOs 3.5.7 and 3.5.8 and the radiation levels are reduced.

12. This note applies to the PXS IRWST injection check valves (PXS-V122A/B, V124A/B). To exercise these check valves a test cart must be moved into containment and temporary connections made to these check valves. In addition, the IRWST injection line isolation valves must have power restored and be closed. These valves are not exercised during power operations because closing the IRWST injection valve is not permitted by the Technical Specifications and the need to perform significant work inside containment. Testing is not performed during cold shutdown for the same reasons. These valves are exercised during refueling conditions when the IRWST injection lines are not required to be available by Technical Specifications and the radiation levels are reduced.

13. Deleted.

14. Component cooling water system containment isolation motor-operated valves CCS-V200, V207, V208 and check valve CCS-V201 are not exercised during power operation. Exercising these valves would stop cooling water flow to the reactor coolant pumps and letdown heat exchanger. Loss of cooling water may result in damage to equipment or reactor trip. These valves are exercised during cold shutdowns when these components do not require cooling water.

15. Normal residual heat removal system reactor coolant isolation motor-operated valves (RNS-V001A/B, V002A/B) are not exercised during power operation. These valves isolate the high pressure RCS from the low pressure RNS and passive core cooling system (PXS). Opening during normal operation may result in damage to equipment or reactor trip. These valves are exercised during cold shutdowns when the RNS is aligned to remove the core decay heat.

16. Normal residual heat removal system containment isolation motor-operated valves (RNS-V002A/B) are not containment isolation leak tested. The basis for the exception is:

    – The valve is submerged during post-accident operations which prevents the release of the containment atmosphere radiogas or aerosol.
    – The RNS is a closed, seismically-designed safety class 3 system outside containment
    – The valves are closed when the plant is in modes above hot shutdown

17. Normal residual heat removal system containment penetration relief valve (RNS-V021) and containment isolation motor-operated valve (RNS-V023) are subjected to containment leak testing by pressurizing the lines in the reverse direction to the flow which accompanies a containment leak in this path.

18. This note applies to the CAS instrument air containment isolation valves (CAS-V014, V015). It is not practical to exercise these valves during power operation or cold shutdowns. Exercising the valves during these conditions may result in some air-operated valves inadvertently opening or closing, resulting in plant or system transients. These valves are exercised during refueling conditions when system and plant transients would not occur.

19. Primary sampling system containment isolation check valve (PSS-V024) is located inside containment and considerable effort is required to install test equipment and cap the discharge line. Exercise testing is not performed during cold shutdown operations for the same reasons. These valves are exercised during refueling conditions when the radiation levels are reduced.

20. This note applies to the main steam isolation valves and main feedwater isolation valves (SGS-V040A/B, V057A/B). The valves are not full stroke tested quarterly at power since full valve stroking will result in a plant transient during normal power operation. Therefore, these valves ~~will be partially stroked on a quarterly basis and~~ will be full stroke tested on a cold shutdown frequency basis. The full stroke testing will be a full "slow" closure operation. The large size and fast stroking nature of the valve makes it advantageous to limit the number of fast closure operations which the valve experiences. The timed slow closure supports the continued ~~verifies the valves~~ operability status of the valves in the intervals between fast closure tests and ensures that the valve is not mechanically bound. NRC 148 NRC 148

21. Post-72 hour check valves that require temporary connections for inservice-testing are exercised every refueling outage. These valves require transport and installation of temporary test equipment and pressure/fluid supplies. Since the valves are normally used very infrequently, constructed of stainless steel, maintained in controlled environments, and of a simple design, there is little benefit in testing them more frequently. For example, valve PCS-V039 is a simple valve that is opened to provide the addition of water to the PCS post-72 hour from a temporary water supply. To exercise the valve, a temporary pump and water supply is connected using temporary pipe and fittings, and the flow rate is observed using a temporary flow measuring device to confirm valve operation.

22. Exercise testing of the auxiliary spray isolation valve (CVS-V084, V085) will result in an undesirable temperature transient on the pressurizer due to the actuation of auxiliary spray flow. Therefore, quarterly exercise testing will not be performed. Exercise testing will be performed during cold shutdowns.

23. Thermal relief check valves in the normal residual heat removal suction line (RNS-V003A/B) and the Chemical and Volume Control System makeup line (CVS-V100) are located inside containment. To exercise test these valves, entry to the containment is required and temporary connections made to gas supplies. Because of the radiation exposure and effort required, this test is not conducted during power operation or during cold shutdowns. Exercise testing is performed during refueling shutdowns. NRC 148

24. Normal residual heat removal system reactor coolant isolation check valves (RNS-V015A/B, V017A/B) are not exercise tested quarterly. During normal power operation these valves isolate the high pressure RCS from the low pressure RNS. Opening during normal operation would require a pressure greater than the RCS normal pressure, which is not available. It would also subject the RCS connection to undesirable transients. These valves will be exercised during cold shutdowns. NRC 148

25. This note applies to the main feedwater control valves (SGS-V250A/B), moisture separator reheater steam control valve (MSS-V016A/B), turbine control valves (MTS-V002A/B, V004A/B). The valves are not quarterly stroke tested since full stroke testing would result in a plant transient during power operation. Normal feedwater and turbine control operation provides a partial stroke confirmation of valve operability. The valves will be full stroke tested during cold shutdowns. NRC 148

26. This note applies to containment compartment drain line check valves (SFS-V071, SFS-V072, WLS-V071A/B/C, WLS-V072A/B/C). These check valves are located inside containment and require temporary connections for exercise testing. Because of the radiation exposure and effort required, these valves are not exercised during power operation or during cold shutdowns. The valves will be exercised during refuelings.

27. Containment isolation valves leakage test frequency will be conducted in accordance with the "Primary Containment Leakage Rate Test Program" in accordance with 10 CFR 50 Appendix J. Refer to SSAR subsection 6.2.5. NRC 148

28. This note applies to the chilled water system containment isolation valves (VWS-V058, V062, V082 and V086). Closing any of these valves stops the water flow to the containment fan coolers. This water flow may be necessary to maintain the containment air temperature within Technical Specification limits. As a result, quarterly exercise testing will be deferred when plant operating conditions and site climatic conditions would cause the containment air temperature to exceed this limit during testing.

29. Exercise testing of the turbine bypass control valves (MSS-V001, V002, V003, V004, V005 and V006) will result in an undesirable temperature transient on the turbine, condenser and other portions of the turbine bypass due to the actuation of bypass flow. Therefore, quarterly exercise testing will not be performed. Exercise testing will be performed during cold shutdowns.

30. Deleted.

31 These valves may be subject to operability testing. See subsection 3.9.6.2.2 for the factors to be considered in the evaluation of operability testing and subsection 3.9.8.4 for the Combined License information item. The specified frequency for operability testing is a maximum of once every 10 years. The test frequency is the longer of every 3 refueling cycles or 5 years until sufficient data exists to determine a longer test frequency is appropriate in accordance with Generic Letter 96-05. Some of the valves will be tested the first time after a shorter period to provide for trending information.

32. These valves are subject to leak testing to support the nonsafety-related classification of the CVS purification subsystem inside containment. These valves are not included in the PIV integrity Technical Specification 3.4.16. The leakage through valves CVS-V001, CVS-V002, and CVS-V080 will be tested separately with a leakage limit of 1.5 gpm for each valve. The leakage through valves CVS-V081, V082, V084, and V085 will be tested at the same time as a group with a leakage limit of 1 gpm for the group. The leak tests will be performed at reduced RCS pressures. The observed leakage at lower pressures can be assumed to be the leakage at the maximum pressure as long as the valve leakage is verified to diminish with increasing pressure differential. Verification that the valves have the characteristic of decreasing leakage with pressure may be provided with two tests at different test pressures. The test requirements including the minimum test pressure and the difference between the test pressures will be defined by the Combined License applicant in the inservice test program as discussed in subsection 3.9.8.

33. This note applies to valve FHS-V001. This valve closes one end of the fuel transfer tube. The fuel transfer tube is normally closed by a flange except during refuelings. This valve has an active safety function to close when the fuel transfer tube flange is removed and normal shutdown cooling is lost. Closing this valve, along with other actions, provides containment closure which allows long term core cooling to be provided by the PXS. As a result this valve is only required to be operable during refueling operations. ~~The exercise testing of this valves will be performed during refueling shutdowns prior to removing the fuel transfer tube flange.~~

34. This note applies to the moisture separator reheater steam control valve (MSS-V016A/B), turbine control valves (MTS-V002A/B, V004A/B), main turbine stop valves (MTS-V001A/B, V003A/B), the turbine bypass control valves (MSS-V001, V002, V003, V004, V005, V006). These valves are not ASME Code Class 1, 2 or 3 and the ASME 1ST Category is indicated based on the valve functions listed~~safety-related~~. These valves are relied on in the safety analyses for those cases in which the rupture of the main steam or feedwater piping inside containment is the postulated initiating event. These valves are credited in single failure analysis to mitigate the event.

35. This note applies to the turbine stop valves (MTS-V001A/B, V003A/B). The valves are not quarterly stroke tested since full stroke testing would result in a plant transient during power operation. The valves will be full stroke tested during cold shutdowns. See Note 34 above.

36. In each of the four turbine inlet lines, there is a turbine stop valve and turbine control valve. Only one of the valves in each of the four lines is required by Technical Specification 3.7.2 to be operable.

37. Active Category A and B manual valves are exercised once every two years in accordance with 10 CFR 50.55a(b)(3)(vi).

38. The exercise stroke test for the VES pressure regulating valves is the stroke distance sufficient to provide the pressure regulating function.

Table 3.9-17

SYSTEM LEVEL OPERABILITY TEST REQUIREMENTS

System/Feature	Test Purpose	Test Method	Tech Spec[a]
PCS			
PCCWST drain lines	Flow capability and water coverage	Note 1	SR 3.6.6.6
PXS			
Accumulator injection lines	Flow capability	Note 2	SR 3.5.1.6
CMT injection lines	Flow capability	Note 3	SR 3.5.2.7
NRC 151 PRHR HX	Heat transfer capability	Note 4	SR 3.5.4.6~~5~~
IRWST injection lines	Flow capability	Note 5	SR 3.5.6.9
Containment recirculation lines	Flow capability	Note 6	SR 3.5.6.9
VES			
NRC 151 MCR isolation/makeup	MCR pressurization capability	Note 7	SR 3.7.6.10~~9~~

Alpha Note:

a. Refer to the Technical Specification surveillance identified in this column for the test frequency.

Notes:

1. The flow capability of each PCS water drain line is demonstrated by conducting a test where water is drained from the PCS water storage tank onto the containment shell by opening two of the three parallel isolation valves. During this flow test the water coverage is also demonstrated. The test is terminated when the flow measurement is obtained and the water coverage is observed. The minimum allowable flow rate is 469.1 gpm with the passive containment cooling water storage tank level 27.3 feet above the lowest standpipe. The test may be run with a higher water level and the test results adjusted for the increased level. Water coverage is demonstrated by visual inspection that there is unobstructed flow from the lower weirs. In addition, at least four air baffle panels will be removed at the containment vessel spring line, approximately 90 degrees apart, to permit visual inspection of the water coverage and the vessel coating. The water coverage observed at these locations will be compared against the coverage measured at the same locations during pre-operational testing (see item 7.(b)(i) of ITAAC Table 2.2.2-6).

2. The flow capability of each accumulator is demonstrated by conducting a test during cold shutdown conditions. The initial conditions of the test include reduced accumulator pressure. Flow from the accumulator to the RCS is initiated by opening the accumulator isolation valve. Sufficient flow is provided to fully open the check valves. The test is terminated when the flow measurement is obtained. The allowable calculated flow resistance between each accumulator and the reactor vessel is $\geq 1.47 \times 10^{-5}$ ft/gpm^2 and $\leq 1.83 \times 10^{-5}$ ft/gpm^2.

3. The flow capability of each CMT is demonstrated by conducting a test during cold shutdown conditions. The initial conditions of the test include the RCS loops drained to a level below the top of the RCS hot leg. Flow from the CMT to the RCS is initiated by opening one CMT isolation valve. The test is terminated when the flow measurement is obtained. The allowable calculated flow resistance between each CMT and the reactor vessel is $\geq 1.83 \times 10^{-5}$ ft/gpm^2 and $\leq 2.25 \times 10^{-5}$ ft/gpm^2.

Table 3.11-1 (Sheet 26 of 50)

ENVIRONMENTALLY QUALIFIED ELECTRICAL AND MECHANICAL EQUIPMENT

Description	AP1000 Tag No.	Envir. Zone (Note 2)	Function (Note 1)	Operating Time Required (Note 5)	Qualification Program (Note 6)
IRWST Suction Line Isolation	RNS-PL-V023	1	ESF	5 min	M *
Limit Switch	RNS-PL-V023-L	1	PAMS	1 yr	E *
Motor Operator	RNS-PL-V023-M	1	ESF	5 min	E *
RNS HX A Channel Head Drain	RNS-PL-V046A	6	ESF	1 yr	M **
RNS – CVS Containment Isolation	RNS-PL-V061	1	ESF	5 min	M *
Limit Switch	RNS-PL-V061-L	1	PAMS	1 yr	E *
NRC 062 Air~~Motor~~ Operator	RNS-PL-V061-S~~M~~	1	ESF	5 min	E *
Containment Isolation	SFS-PL-V034	1	ESF	5 min	M *
Limit Switch	SFS-PL-V034-L	1	PAMS	1 yr	E *
Motor Operator	SFS-PL–V034-M	1	ESF	5 min	E *
Containment Isolation	SFS-PL-V035	6	ESF	5 min	M S **
Limit Switch	SFS-PL-V035-L	6	PAMS	2 wks	E **
Motor Operator	SFS- PL-V035-M	6	ESF	5 min	E **
SFS Discharge Containment Isolation	SFS-PL-V037	1	ESF	5 min	M *
Containment Isolation	SFS-PL-V038	6	ESF	5 min	M S **
Limit Switch	SFS-PL-V038-L	6	PAMS	2 wks	E **
Motor Operator	SFS-PL-V038-M	6	ESF	5 min	E **
Spent Fuel Pool to Cask Washdown Pit Isolation	SFS-PL-V066	6	ESF	2 wks	M **
Cask Washdown Pit Drain Isolation	SFS-PL-V068	6	ESF	2 wks	M **
Refueling Cavity to SG Compartment	SFS-PL-V071	1	ESF	2 wks	M *
Refueling Cavity to SG Compartment	SFS-PL-V072	1	ESF	2 wks	M *
PORV Block Valve	SGS-PL-V027A	5	ESF	5 min	M *
Limit Switch	SGS-PL-V027A-L	5	PAMS	2 wks	E *
Motor Operator	SGS-PL-V027A-M	5	ESF	5 min	E *
PORV Block Valve	SGS-PL-V027B	5	ESF	5 min	M *
Limit Switch	SGS-PL-V027B-L	5	PAMS	2 wks	E *
Motor Operator	SGS-PL-V027B-M	5	ESF	5 min	E *
Steam Safety Valve SG01	SGS-PL-V030A	5	ESF	5 min	M *
Limit Switch	SGS-PL-V030A-L	5	PAMS	2 wks	E * +
Steam Safety Valve SG02	SGS-PL-V030B	5	ESF	5 min	M *
Limit Switch	SGS-PL-V030B-L	5	PAMS	2 wks	E * +
Steam Safety Valve SG01	SGS-PL-V031A	5	ESF	5 min	M *
Limit Switch	SGS-PL-V031A-L	5	PAMS	2 wks	E * +
Steam Safety Valve SG02	SGS-PL-V031B	5	ESF	5 min	M *
Limit Switch	SGS-PL-V031B-L	5	PAMS	2 wks	E * +

Table 3.11-1 (Sheet 31 of 50)

ENVIRONMENTALLY QUALIFIED ELECTRICAL AND MECHANICAL EQUIPMENT

Description	AP1000 Tag No.	Envir. Zone (Note 2)	Function (Note 1)	Operating Time Required (Note 5)	Qualification Program (Note 6)
Containment Purge Discharge Isolation	VFS-PL-V009	1	ESF	5 min	M *
Limit Switch	VFS-PL-V009-L	1	PAMS	1 yr	E *
Solenoid Valve	VFS-PL-V009-S1	1	ESF	5 min	E *
NRC 062 Containment Purge Discharge Isolation	VFS-PL-V010	6	ESF	5 min	M S **
Limit Switch	VFS-PL-V010-L	6	PAMS	2 wks	E **
Solenoid Valve	VFS-PL-V010-S1	6	ESF	5 min	E **
Fan Cooler Supply Isolation	VWS-PL-V058	2	ESF	5 min	M S
Limit Switch	VWS-PL-V058-L	2	PAMS	2 wks	E
Solenoid Valve	VWS-PL-V058-S	2	ESF	5 min	E
Fan Cooler Supply Isolation	VWS-PL-V062	1	ESF	5 min	M *
Fan Cooler Return Isolation	VWS-PL-V082	1	ESF	5 min	M *
Limit Switch	VWS-PL-V082-L	1	PAMS	1 yr	E *
Solenoid Valve	VWS-PL-V082-S	1	ESF	5 min	E *
Fan Cooler Return Isolation	VWS-PL-V086	2	ESF	5 min	M S
Limit Switch	VWS-PL-V086-L	2	PAMS	2 wks	E
Solenoid Valve	VWS-PL-V086-S	2	ESF	5 min	E
Sump Containment Isolation IRC	WLS-PL-V055	1	ESF	5 min	M *
Limit Switch	WLS-PL-V055-L	1	PAMS	1 yr	E *
Solenoid Valve	WLS-PL-V055-S1	1	ESF	5 min	E *
Sump Containment Isolation ORC	WLS-PL-V057	7	ESF	5 min	M S **
Limit Switch	WLS-PL-V057-L	7	PAMS	2 wks	E **
Solenoid Valve	WLS-PL-V057-S1	7	ESF	5 min	E **
RCDT Gas Containment Isolation	WLS-PL-V067	1	ESF	5 min	M *
Limit Switch	WLS-PL-V067-L	1	PAMS	1 yr	E *
Solenoid Valve	WLS-PL-V067-S	1	ESF	5 min	E *
RCDT Gas Containment Isolation	WLS-PL-V068	7	ESF	5 min	M S **
Limit Switch	WLS-PL-V068-L	7	PAMS	2 wks	E **
Solenoid Valve	WLS-PL-V068-S	7	ESF	5 min	E **
CVS To Sump	WLS-PL-V071 A	1	ESF	2 wks	M *
PXS A To Sump	WLS-PL-V071 B	1	ESF	2 wks	M *
PXS B To Sump	WLS-PL-V071 C	1	ESF	2 wks	M *
CVS To Sump	WLS-PL-V072 A	1	ESF	2 wks	M *
PXS A To Sump	WLS-PL-V072 B	1	ESF	2 wks	M *
PXS B To Sump	WLS-PL-V072 C	1	ESF	2 wks	M *

3D.6.2.3.9 Qualification Documentation

The qualification of the mechanical equipment to the postulated environments is documented in an auditable form. See subsection 3D.7.

3D.6.3 Operating Experience

Qualification by experience is typically not employed in the AP1000 equipment qualification program as a prime method of qualification. Operating experience provides supportive evidence to the prime method of qualification. For those instances where seismic experience data are to be used, the Combined License applicant will provide documentation of the methodology. Where such information is provided, it is demonstrated that the experience is applicable to the safety-related functional requirements of the equipment. This demonstration of applicability includes an evaluation of operating environments, mountings, performance requirements, and performance history. Requirements for the documentation of qualification via experience are~~is~~ discussed in subsection 3D.7.6.

NRC 062

3D.6.4 On-Going Qualification

The AP1000 equipment qualification program may employ on-going qualification through special maintenance and surveillance activities. However, this method of qualification is not suitable as a sole means for qualifying equipment for design basis event conditions. On-going qualification, as a method, is used exclusively for safety-related equipment located in a mild environment area. Such use requires supplementary test, analysis, or experience data to address equipment operability and performance during and after a seismic design basis event.

Documentation requirements for qualification that includes on-going qualification as a method are developed to conform with NRC guidance provided in Regulatory Guide 1.33, Revision 2.

3D.6.5 Combinations of Methods

Qualification by a combination of the preceding methods is used whenever qualification by type test is not the sole basis of qualification under the AP1000 equipment qualification program. If analysis is used, justification includes identifying a test or experience bases, and addressing concerns related to departure from the required type test sequence.

3D.6.5.1 Use of Existing Qualification Reports

Pre-existing qualification programs and documents are used only if the seismic test program satisfies the guidelines of IEEE 344-1987 and the environmental qualification program satisfies the guidelines of IEEE 323-1974.

NRC 062

Qualification test and analysis reports conforming to those IEEE Standards, but not specifically performed to the AP1000 equipment qualification program parameters, may be acceptable as qualification bases. In such cases, supplementary qualification efforts described in subsections 3D.6.2, 3D.6.3, and 3D.6.4 of this appendix may be required to validate acceptability under the AP1000 equipment qualification program. Justifications are documented as analyses, and appear in equipment qualification data package, Section 4.0. (See Attachment A.)

4.Y.2 Component Identification

{Per Subsection 6.2.3.1}

4.Y.3 Safety Related Functions

{Per Subsection 6.2.3.2}

4.Y.4 Component Acceptance Criteria

{Per Subsection 6.2.3.3}

4.Y.5 Service Conditions

{Per Subsection 6.2.3.4}

4.Y.6 Potential Failure Modes

{Per Subsection 6.2.3.5}

4.Y.7 Identify the Environmental Effects on Material Properties

Each non-metallic, including lubricants, is evaluated to determine the effect of the environmental conditions on the material properties. For each non-metallic, a radiation threshold level and maximum service temperature is identified.

The radiation threshold level and the maximum service temperature are identified using materials handbooks, textbooks, government and industry reports, and laboratory data. If the evaluation indicates that the lowest levels may be exceeded for certain equipment, higher levels are identified at which varying degrees of material degradation may occur.

Mechanical equipment is highly resistive to degradation due to elevated humidity levels: therefore, relative humidity is not included as a parameter to be evaluated for environmental qualification. Pressure can be discounted for most equipment types, as there are no foreseen failures due to elevated pressure levels for most mechanical equipment. However, pressure must be addressed in the evaluation.

The susceptibility of the non-metallic material to the chemicals due to the design basis accident and exposure to the process fluid is evaluated. The material information in the chemical handbooks is an acceptable source of qualification documentation.

4.Y.7.1 Perform Thermal Aging Analysis

Aging analysis is performed for organic materials. Mineral-based subcomponents are not considered to be sensitive to thermal aging during the design life of a plant and, therefore, are not analyzed.

NRC 062
NRC 148

Aging in mechanical components is associated with corrosion, erosion, particle deposits and embrittlement. In new construction, corrosion and erosion are considered by providing additional material thickness as a corrosion or erosion allowance above the required design. The other aging phenomena are considered during inservice inspections of operating components in accordance with ~~as contained in plant technical specifications and~~ ASME Code, Section XI. Aging qualification of metallic parts of equipment except for corrosion and erosion is in compliance with ASME Code, Section XI, therefore aging effects on metallic components are not addressed herein.

The non-metallic material analysis for determining the expected qualified thermal life is performed using Arrhenius methodology. The thermal input during the operating time, as explained below, is deducted from the tested thermal aging of the material at service temperature to obtain the qualified life.

The component is evaluated for the specified post-accident operating time. The thermal input from the postulated accident profile (i.e., LOCA/MSLB) for the duration of the specified operating time is compared to the material thermal aging data. The Arrhenius model is used to perform this comparison. The component is evaluated for the maximum post-accident operating time unless a system analysis is performed to justify shorter operating times.

APPENDIX 3G NUCLEAR ISLAND SEISMIC ANALYSES

3G.1 Introduction

This appendix summarizes the seismic analyses of the nuclear island building structures performed to support the AP1000 design certification extension from just hard rock sites, to sites ranging from soft soils to hard rock. The seismic Category I building structures consist of the containment building (the steel containment vessel [SCV] and the containment internal structures [CIS]), the shield building, and the auxiliary building. These structures are founded on a common basemat and are collectively known as the nuclear island or nuclear island structures. Key dimensions of the seismic Category I building structures, such as thickness of the basemat, floor slabs, roofs and walls, are shown in Figures 3.7.1-14 and 3.7.2-12.

Analyses were performed in accordance with the criteria and methods described in Section 3.7. Section 3G.2 describes the development of the finite element models. Section 3G.3 describes the soil structure interaction analyses of a range of site parameters and the selection of the parameters used in the design analyses. Section 3G.4 describes the fixed base and soil structure interaction dynamic analyses and provides typical results from these dynamic analyses. In Reference 3 are provided~~s~~ a summary of dynamic and seismic analysis results (i.e., modal model properties, accelerations, displacements response spectra) and the nuclear island liftoff analyses.

NRC 011
NRC 041

The seismic analyses of the nuclear island are summarized in a seismic analysis summary report. Deviations from the design due to as-procured or as-built conditions are acceptable based on an evaluation consistent with the methods and procedures of Sections 3.7 and 3.8 provided the following acceptance criteria are met:

- The structural design meets the acceptance criteria specified in Section 3.8.
- The seismic floor response spectra (FRS) meet the acceptance criteria specified in subsection 3.7.5.4.

Depending on the extent of the deviations, the evaluation may range from documentation of an engineering judgment to performance of a revised analysis and design. The results of the evaluation will be documented in an as-built summary report by the Combined License applicant.

Table 3G.1-1 and Figure 3G.1-1 summarize the types of models and analysis methods that are used in the seismic analyses of the nuclear island, as well as the type of results that are obtained and where they are used in the design. Table 3G.1-2 summarizes the dynamic analyses performed and the methods used for combination of modal responses and directional input.

3G.2 Nuclear Island Finite Element Models

The AP1000 nuclear island consists of three distinct seismic Category I structures founded on a common basemat. The three building structures that make up the nuclear island are the coupled auxiliary and shield building (ASB), the SCV, and the CIS. The shield building and the auxiliary building are monolithically constructed with reinforced concrete and, therefore, considered one structure. The nuclear island is embedded approximately 40 feet with the bottom of basemat at

includes a surrounding layer of excavated soil and the existing soil media as shown in Figures 3G.4-3 and 3G.4-4. Acceleration time histories and floor response spectra are obtained. Adjacent structures have a negligible effect on the nuclear island structures and, thus, are not considered in the 3D SASSI analyses.

In these analyses, the three components of ground motions (N-S, E-W, and vertical direction) are input separately. Each design acceleration time history (N-S, E-W, and vertical) is applied separately, and the time history responses are calculated at the required nodes. The resulting co-linear time history responses at a node due to the three earthquake components are then combined algebraically.

3G.4.3 Seismic Analysis ~~Dynamic Results~~

3G.4.3.1 Response Spectrum Analysis

NRC 169

The response spectrum methodology used in the ~~a~~AP1000 design employs the Complete Quadratic Combination (CQC, Section 1.1 of Reference 5) grouping method for closely spaced modes with the Der Kiureghian Correlation Coefficient (Section 1.1.3 of Reference 5) used for correlation between modes. The Lindley-Yow (Section 1.3.2, Reference 5) spectra analysis methodology is employed for modes with both periodic and rigid response components. The modal analysis performed to develop composite modal participation is used to develop input for the response spectrum analysis. Modes ranging from 0 to 33 Hz or higher are considered. For modes above the cutoff frequency, the Lindley-Yow is used. The Static ZPA Method (Section 1.4.2, Reference 5) is employed for the residual rigid response component for each mode as outlined in NRC Reg. Guide 1.92 (Reference 5). The complete solution is developed via Combination Method B (Section 1.5.2, Reference 5). The combined effects, considering three spatial components of an earthquake (N-S, E-W, and Vertical), are combined by square root sum of the squares method (Section 2.1, Reference 5).

3G.4.3.~~1~~2 Absolute Accelerations

The seismic analyses results, which include the new shield building configuration described in Section 3.8, are given in Reference 3.

NRC 169

3G.4.3.3 Seismic Response Spectrum

The AP1000 plant floor response spectrum for the six key locations are provided in Figure 3.G.4-5X to 3G.4-10Z. the bay locations are defined in Table 3G.4-1.

3G.5 References

1. NUREG-800, Review of Safety Analysis Reports for Nuclear Power Plants, Section 3.7.2, Seismic System Analysis, Revision 2.

2. GW-GL-700, AP600 Design Control Document, Appendices 2A and 2B, Revision 4.

3. APP-GW-S2R-010, "Extension of Nuclear Island Seismic Analyses to Soil Sites," Revision 1, Westinghouse Electric Company LLC.

4. APP-GW-GLN-112, "Structural Verification for Enhanced Shield Building," Westinghouse Electric Company LLC.

NRC 169 5. U.S. NRC Regulatory 1.92, Rev. 2, "Combining Modal Responses and Spatial Components in Seismic Analysis."

Table 3G.1-1 (Sheet 1 of 3)

SUMMARY OF MODELS AND ANALYSIS METHODS

Model	Analysis Method	Program	Type of Dynamic Response/Purpose
3D (ASB) solid-shell model	-	ANSYS	Creates the finite element mesh for the ASB finite element model.
3D (CIS) solid-shell model	-	ANSYS	Creates the finite element mesh for the CIS finite element model.
3D finite element model including shield building roof (ASB10)	-	ANSYS	ASB portion of NI10.
NRC 011 NRC 041 3D finite element model including dish below containment vessel	Response spectrum analysis~~Equivalent static analysis using accelerations from time history analyses~~	ANSYS	CIS portion of NI10. To obtain SSE member forces for the containment internal structures.
NRC 011 NRC 041 NRC 011 NRC 041 NRC 011 NRC 041 3D finite element shell model of nuclear island [NI10] (coupled auxiliary and shield building ~~ASB~~ shell model, containment internal structures, steel containment vessel~~SCV~~, polar crane, RCL~~reactor coolant loop~~, pressurizer, and CMTs~~core makeup tanks~~)	Mode superposition time history analysis	ANSYS	Performed for hard rock profile for ASB with CIS as superelement and for CIS with ASB as superelement. To develop time histories for generating plant design floor response spectra for nuclear island structures. To obtain maximum absolute nodal accelerations (ZPA) to be used in equivalent static analyses. To obtain maximum displacements relative to basemat. To obtain maximum member forces and moments in selected elements for comparison to equivalent static results.

3D finite element coarse shell model of auxiliary and shield building ~~ASB~~ and containment internal structures [NI20] (including steel containment vessel~~SCV~~, polar crane, RCL~~reactor coolant loop~~, and pressurizer)	Mode superposition time history analysis	ANSYS	Performed for hard rock profile for comparisons against more detailed NI10 model.

NRC 011
NRC 041

NRC 011
NRC 041

Table 3G.1-1 (Sheet 2 of 3)

SUMMARY OF MODELS AND ANALYSIS METHODS

Model	Analysis Method	Program	Type of Dynamic Response/Purpose
Finite element lumped-mass stick model of nuclear island.	Time history analysis	SASSI	Performed 2D parametric soil ~~structure interaction~~ studies to help establish the bounding generic soil conditions and to develop loads for overturning and stability evaluation.
Finite element lumped mass stick model of nuclear island.	Time history analysis	ANSYS	Performed 2D linear and non-linear seismic analyses to evaluate effect of lift off on Floor Response Spectra and bearing.
3D finite element coarse shell model of auxiliary and shield building~~ASB~~ and containment internal structures [NI20] (including steel containment vessel~~SCV~~, polar crane, RCL~~reactor coolant loop~~, and pressurizer)	Time history analysis	SASSI	Performed for the three soil profiles of firm rock, upper bound soft-to-medium soil, and soft-to-medium soil. To develop time histories for generating plant design floor response spectra for nuclear island structures. To obtain maximum absolute nodal accelerations (ZPA) to be used in equivalent static analyses. To obtain maximum displacements relative to basemat. To obtain maximum member forces and moments in selected elements for comparison to equivalent static results.

NRC 011
NRC 041

NRC 011
NRC 041

NRC 011
NRC 041

3D shell of revolution model of steel containment vessel ~~SCV~~	Model analysis; equivalent static analysis using accelerations from time history analyses	ANSYS	To obtain dynamic properties. To obtain SSE stresses for the containment vessel.
3D lumped-mass stick model of the SCV	-	ANSYS	Used in the NI10 and NI20 models.
3D lumped-mass stick model of the RCL~~reactor coolant loop~~	-	ANSYS	Used in the NI10 and NI20 models.
3D lumped-mass stick model of the pressurizer	-	ANSYS	Used in the NI10 and NI20 models.

NRC 011
NRC 041

Table 3G.1-1 (Sheet 3 of 3)

SUMMARY OF MODELS AND ANALYSIS METHODS

Model	Analysis Method	Program	Type of Dynamic Response/Purpose
Static Analyses			
3D lumped-mass stick model of the CMT~~core makeup tank~~	-	ANSYS	Used in the NI10 model.
3D lumped mass detailed model of the polar crane	Modal analysis	ANSYS	To obtain dynamic properties. Used with 3D finite element shell model of the containment vessel.
3D lumped mass simplified (single beam) model of the polar crane.		ANSYS	Used in the NI10 and NI20 models.
3D finite element shell model of containment vessel[(1)]	Mode superposition time history analysis; static analysis; response spectrum analysis.	ANSYS	Used with detailed polar crane model to obtain acceleration response of equipment hatch and airlocks. To obtain shell stresses in vicinity of the large penetrations of the containment vessel.
Static and Response Spectrum Analyses			
~~3D finite element refined shell model of ASB (ASB05)~~	~~Equivalent static analysis using accelerations from time history analyses~~	~~ANSYS~~	~~To obtain SSE member forces for the ASB.~~
~~3D finite element model of the shield building roof~~	~~Equivalent static analysis using accelerations from time history analyses~~	~~GT STRUDL~~	~~To obtain SSE member forces for the shield building roof.~~
3D finite element refined shell model of nuclear island (NI05)	Equivalent static non-linear analysis using accelerations from time history analyses; response spectrum analysis	ANSYS	To obtain SSE member forces for the nuclear island basemat.

NRC 011
NRC 041
NRC 011
NRC 041
NRC 011
NRC 041
NRC 169
NRC 011
NRC 041

NRC 169

Table 3G.4-1

KEY NODES AT LOCATION

Location	General Area	Elevation (feet)
CIS at Reactor Vessel Support Elevation	SCV Center	100.00
CIS at Operating Deck	SG West Compartment, NE	134.25
ASB NE Corner at Control Room Floor	NE Corner	116.50
ASB Corner of Fuel Building Roof at Shield Building	NW Corner of Fuel Bldg	179.19
ASB Shield Building Roof Area	South Side of Shield Bldg	327.41
SCV Near Polar Crane	SCV Stick Model	224.00

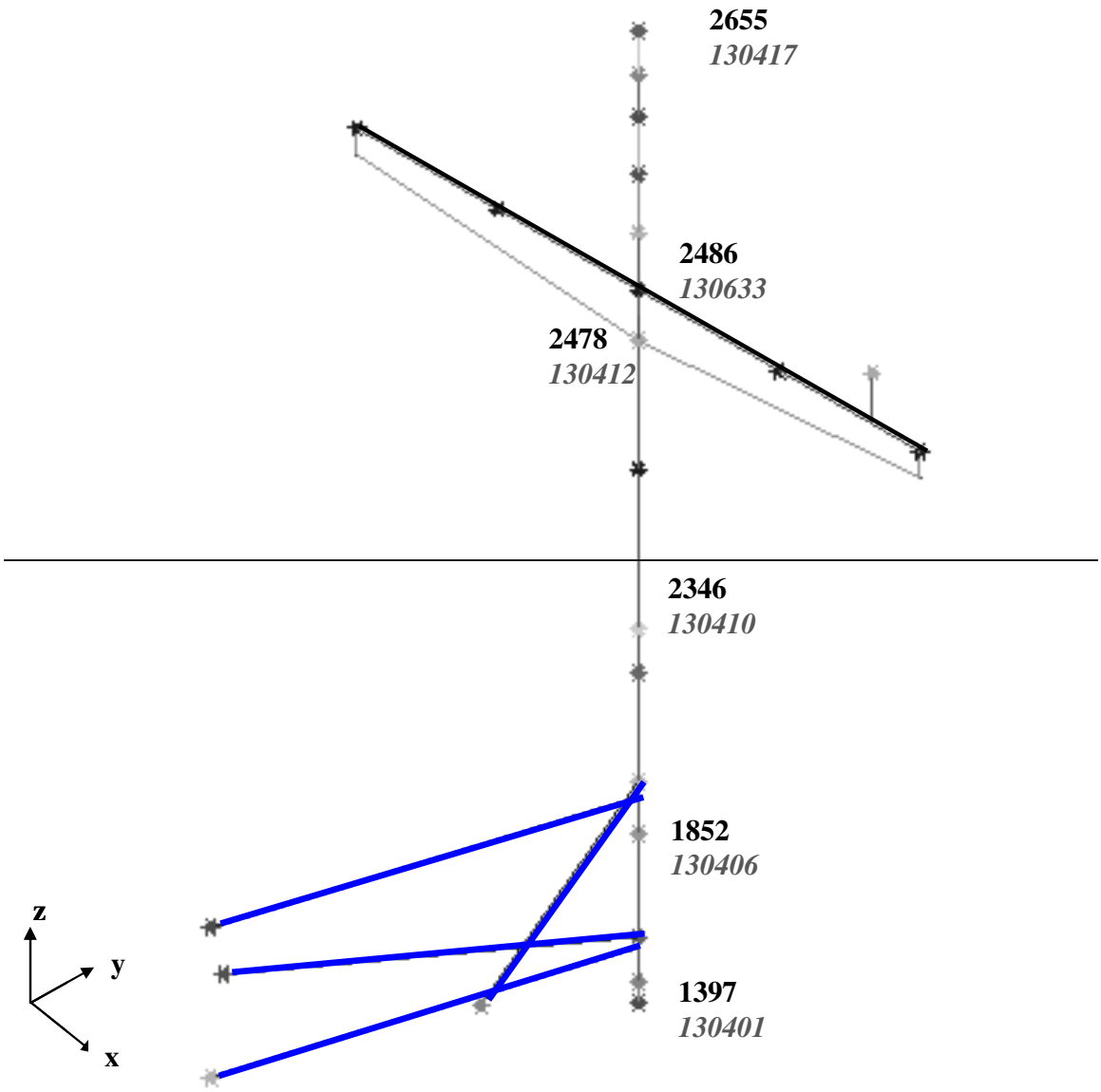
2655
130417
2486
130633
2478
130412
2346
130410
1852
130406
1397
130401
z
y
x

NRC 011
NRC 041

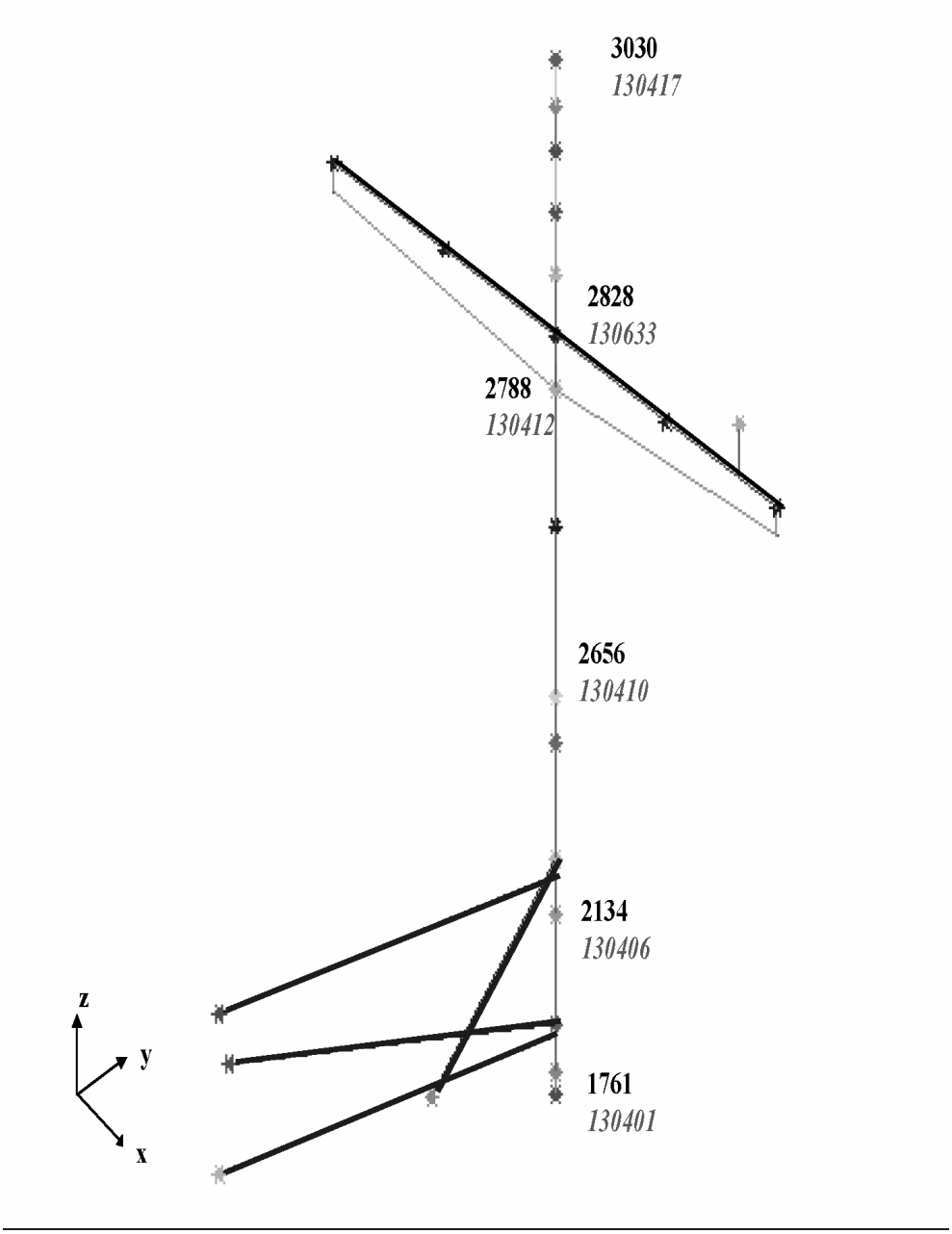

Figure 3G.2-4

Steel Containment Vessel and Polar Crane Models

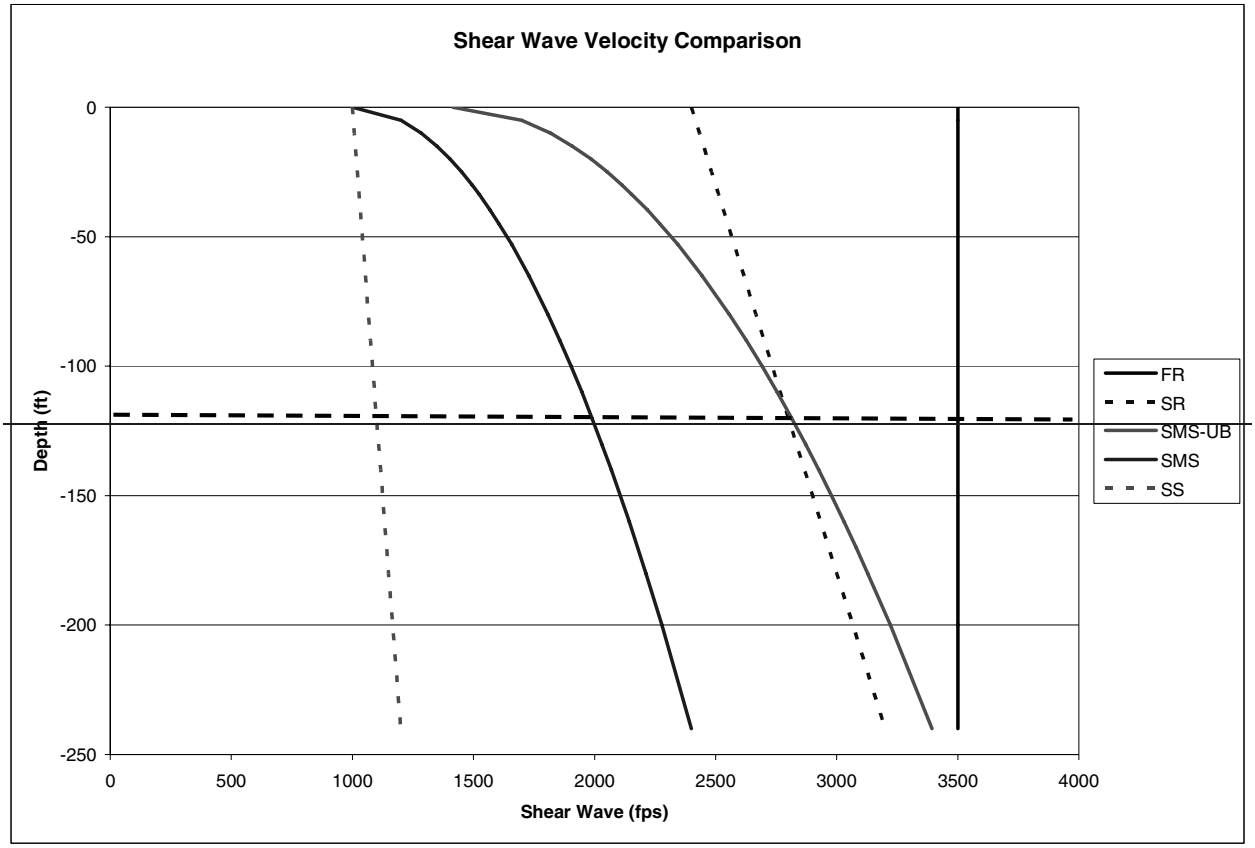
Shear Wave Velocity Comparison
0
-50
-100
-150
-200
-250
Depth (ft)
0
500
1000
1500
2000
2500
3000
3500
4000
Shear Wave (fps)
FR
SR
SMS-UB
SMS
SS

NRC 011
NRC 041

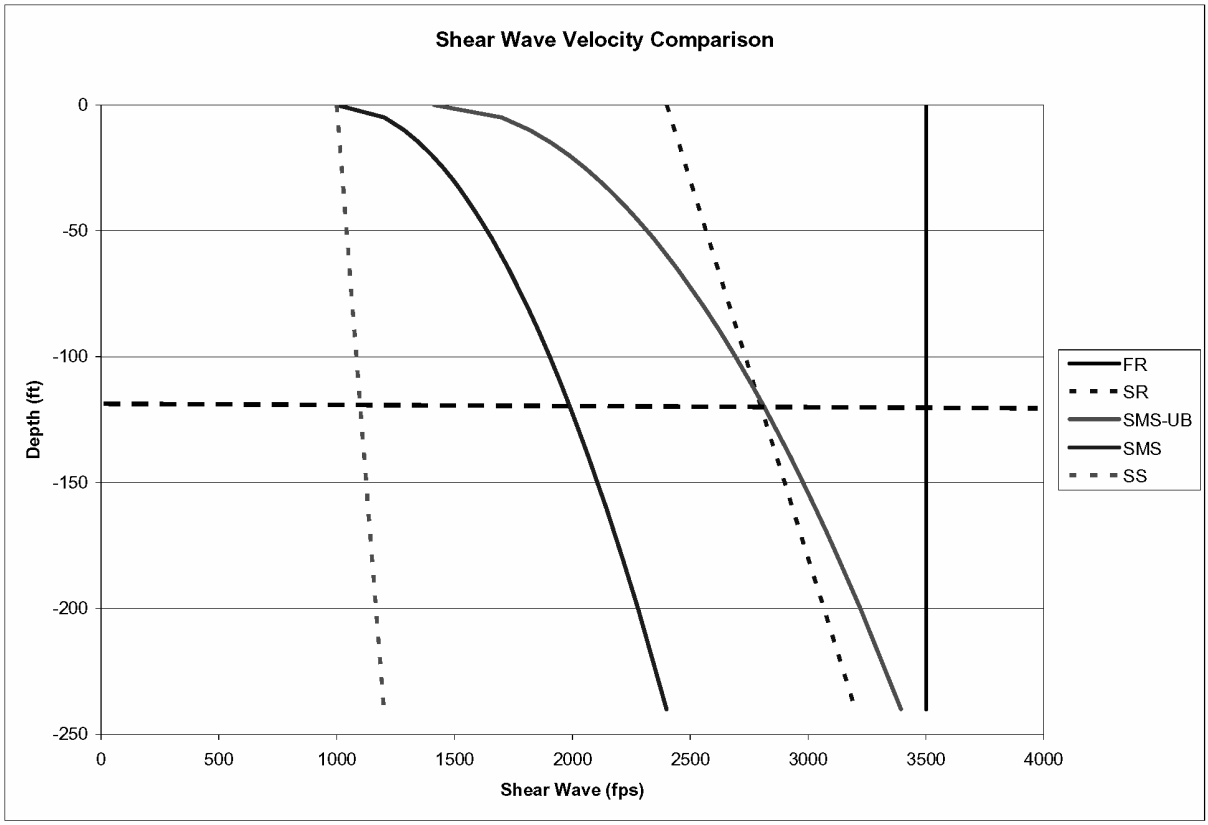

Note: Fixed base analyses were performed for hard rock sites. These analyses are applicable for shear wave velocity greater than 8000 feet per second.

Figure 3G.3-1

Generic Soil Profiles

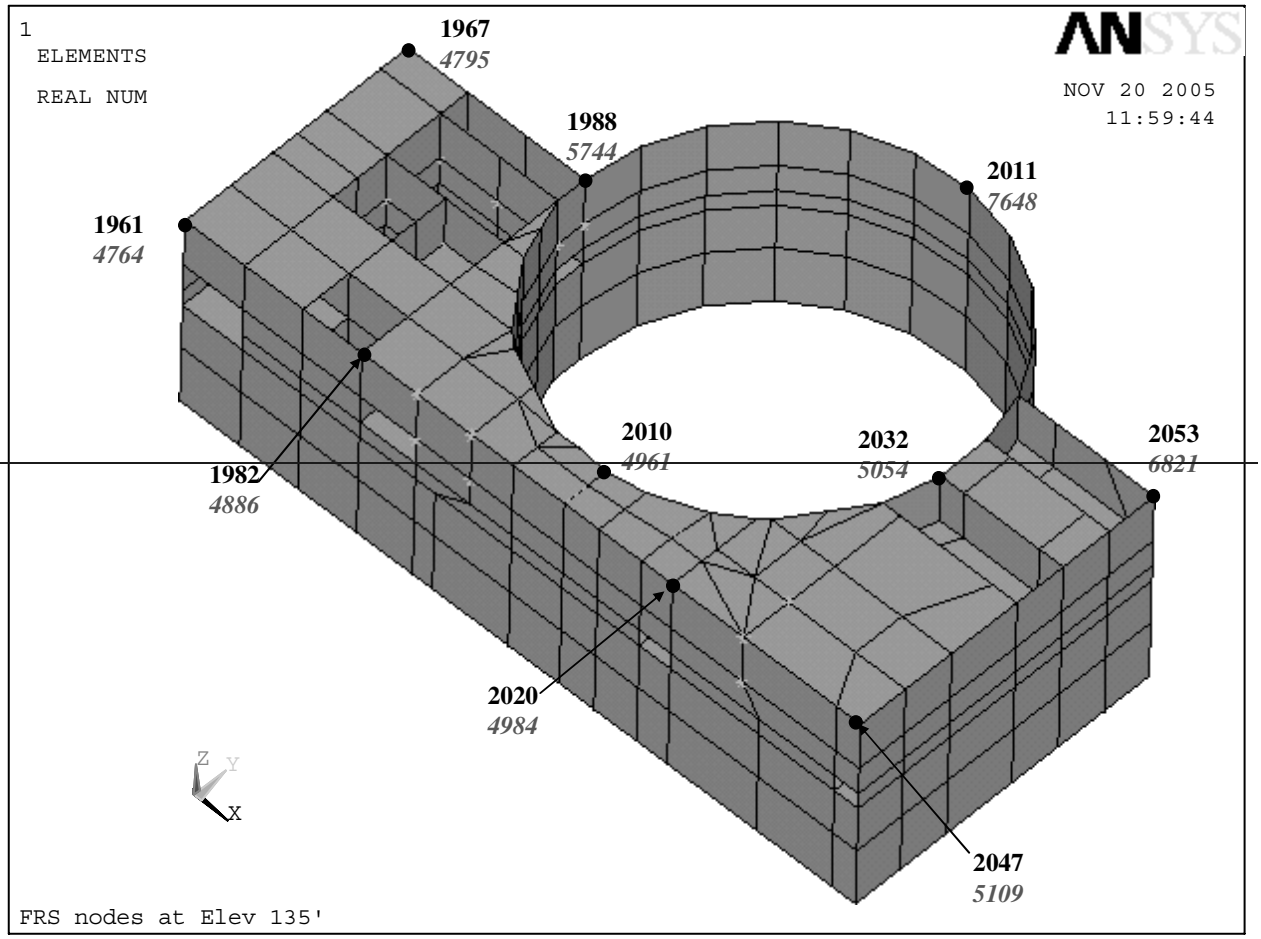
1
ELEMENTS
REAL NUM
ANSYS
NOV 20 2005
11:59:44
1967
4795
1988
5744
2011
7648
1961
4764
2010
4961
2032
5054
2053
6821
1982
4886
2020
4984
2047
5109
Z
Y
X
FRS nodes at Elev 135'

NRC 011
NRC 041

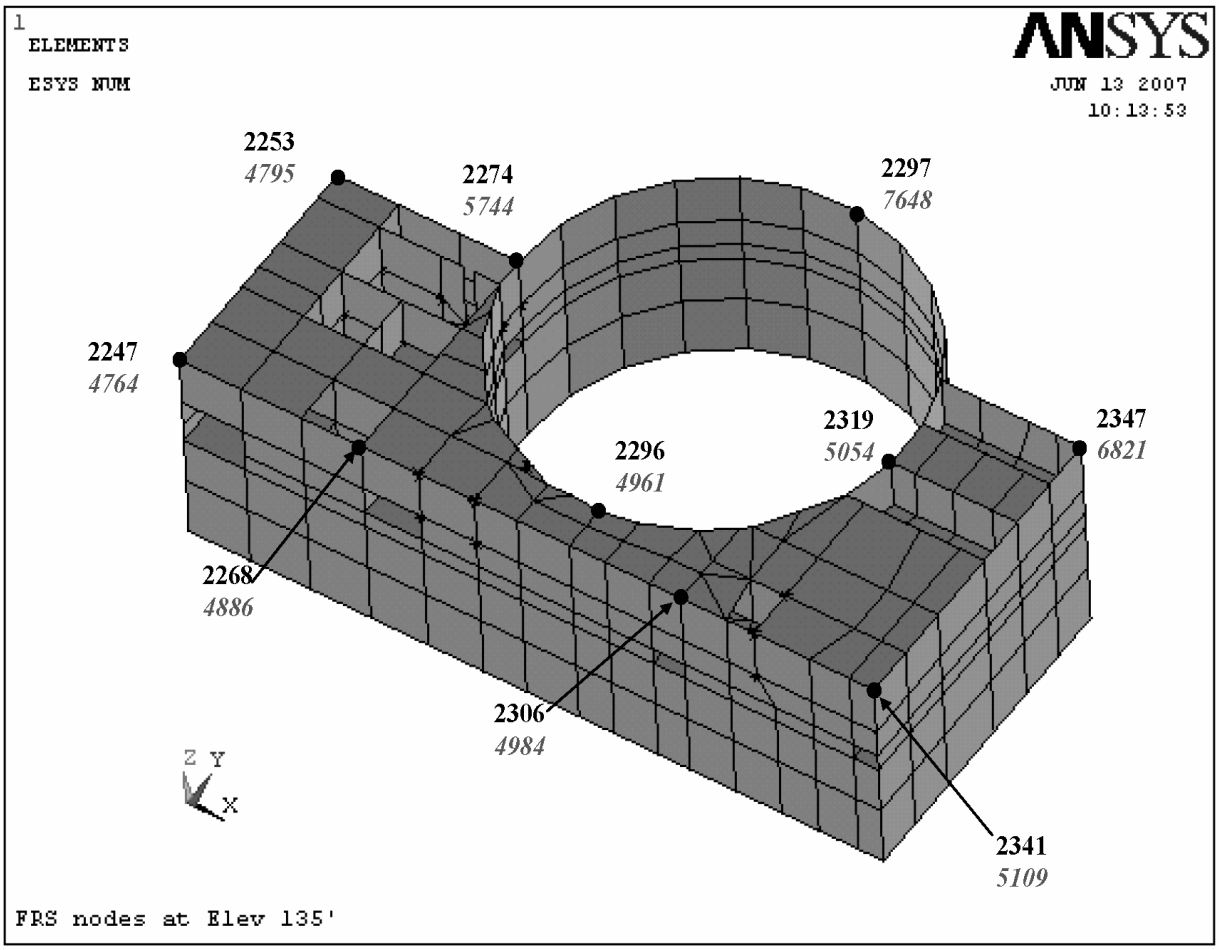

Figure 3G.4-1

Auxiliary Shield Building "Rigid" Nodes at El. 135′

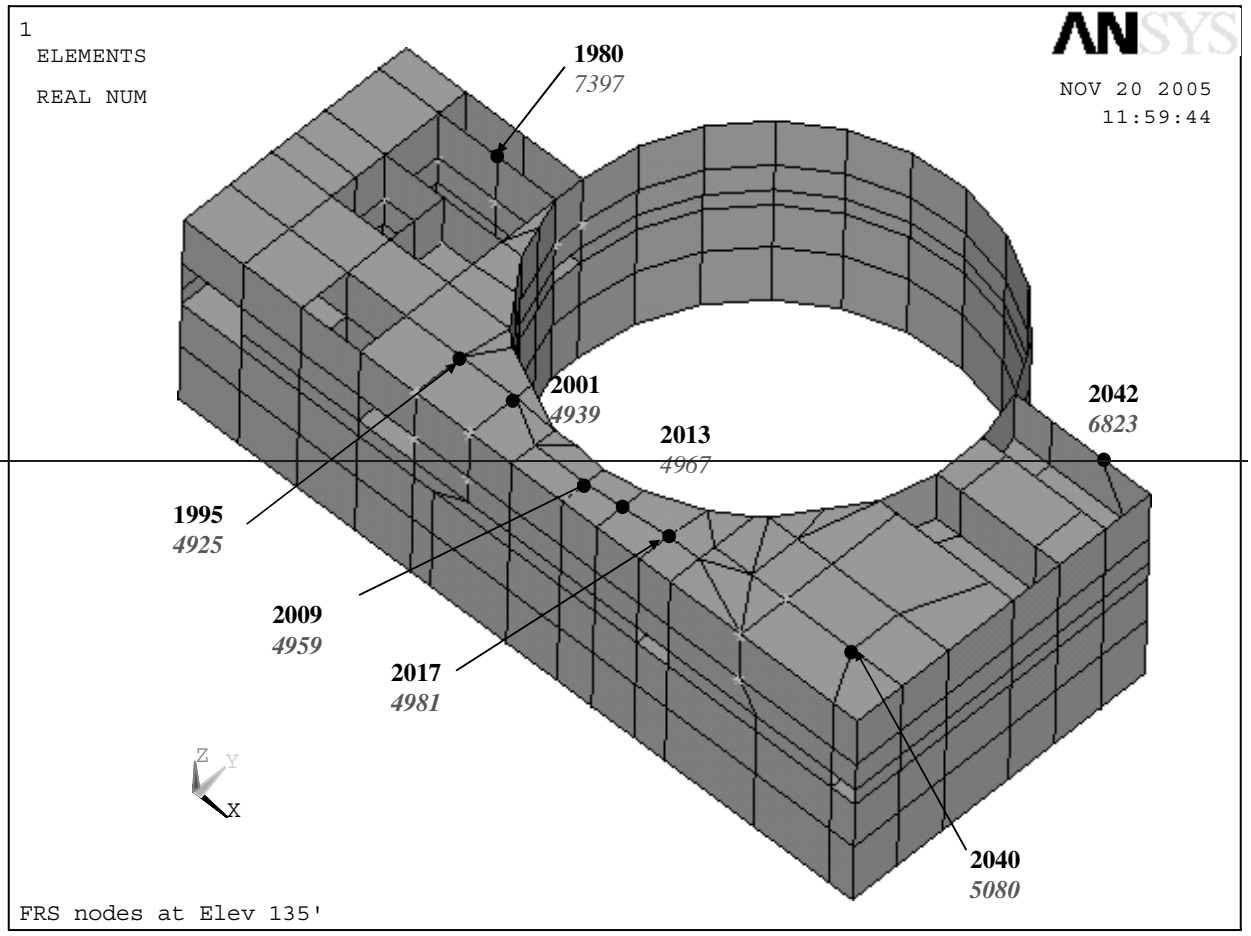
1
ELEMENTS
REAL NUM
ANSYS
NOV 20 2005
11:59:44
1980
7397
2001
4939
2013
4967
2042
6823
1995
4925
2009
4959
2017
4981
2040
5080
Z
Y
X
FRS nodes at Elev 135'

NRC 011
NRC 041

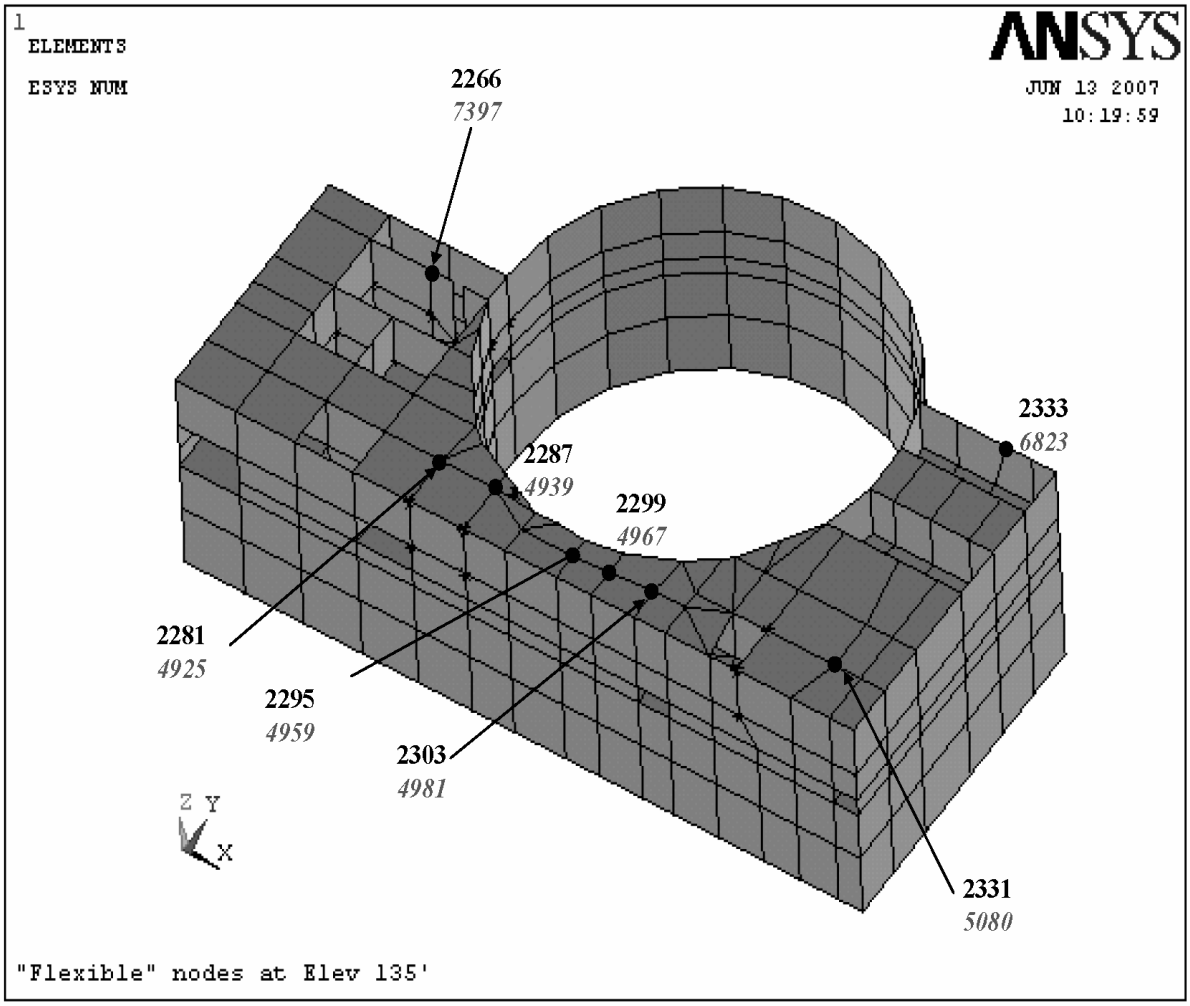

Figure 3G.4-2

Auxiliary Shield Building "Flexible" Nodes at El. 135′

NRC 011
NRC 041

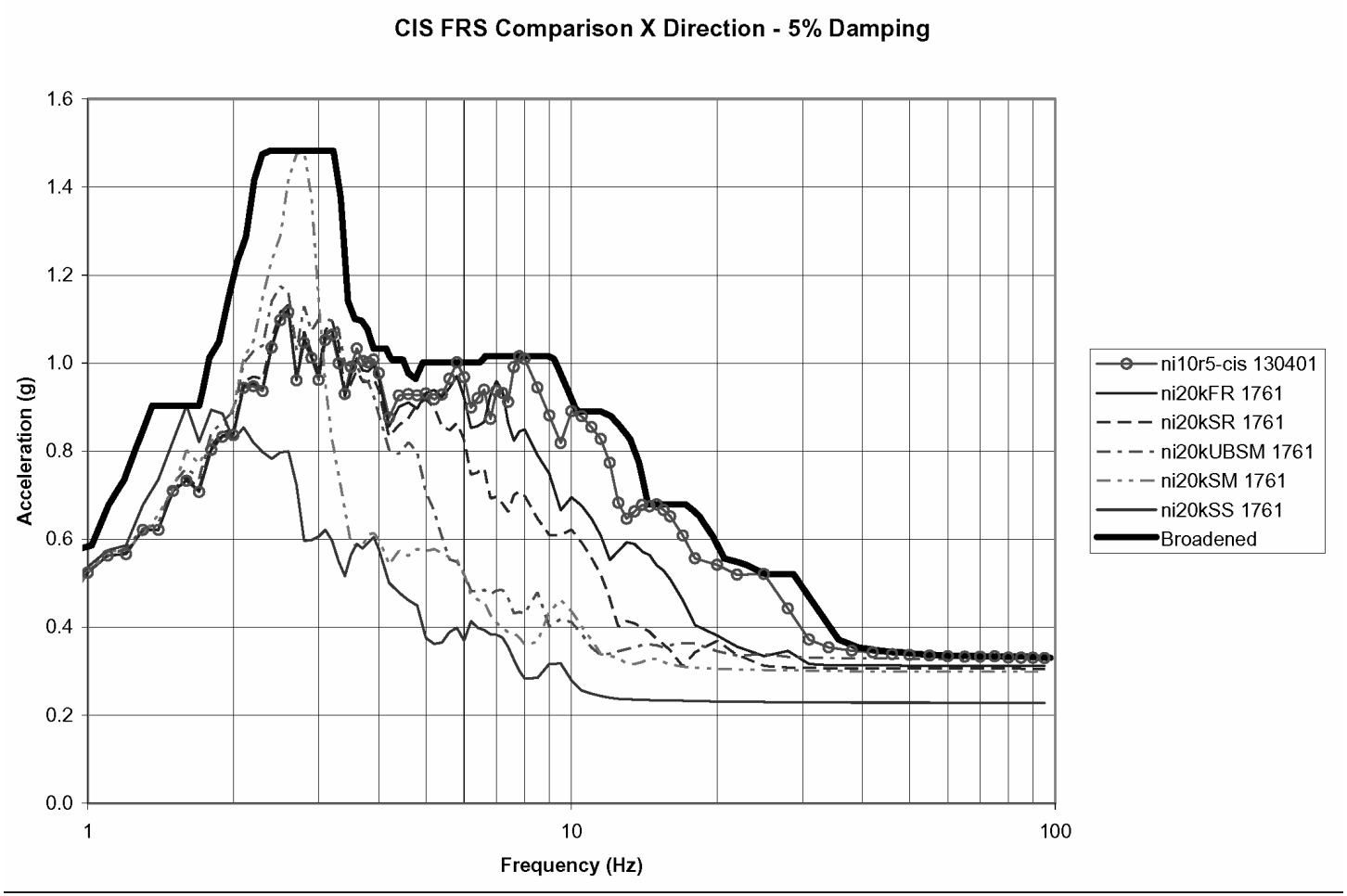

Figure 3G.4-5X

X Direction FRS for Node 130401 (NI10) or 1761 (NI20) CIS at Reactor Vessel Support Elevation of 100′

NRC 011
NRC 041

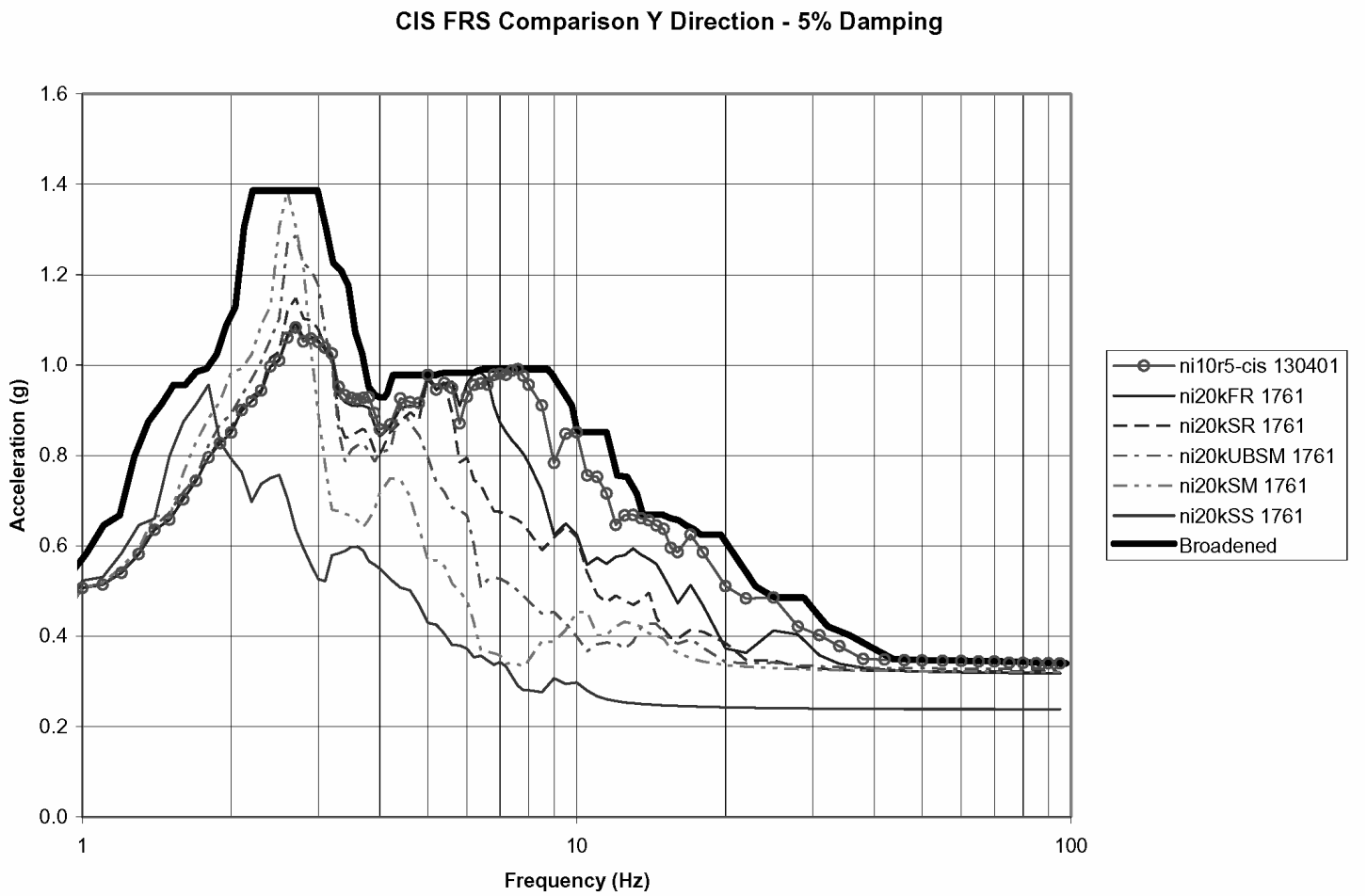

Figure 3G.4-5Y

Y Direction FRS for Node 130401 (NI10) or 1761 (NI20) CIS at Reactor Vessel Support Elevation of 100′

NRC 011
NRC 041

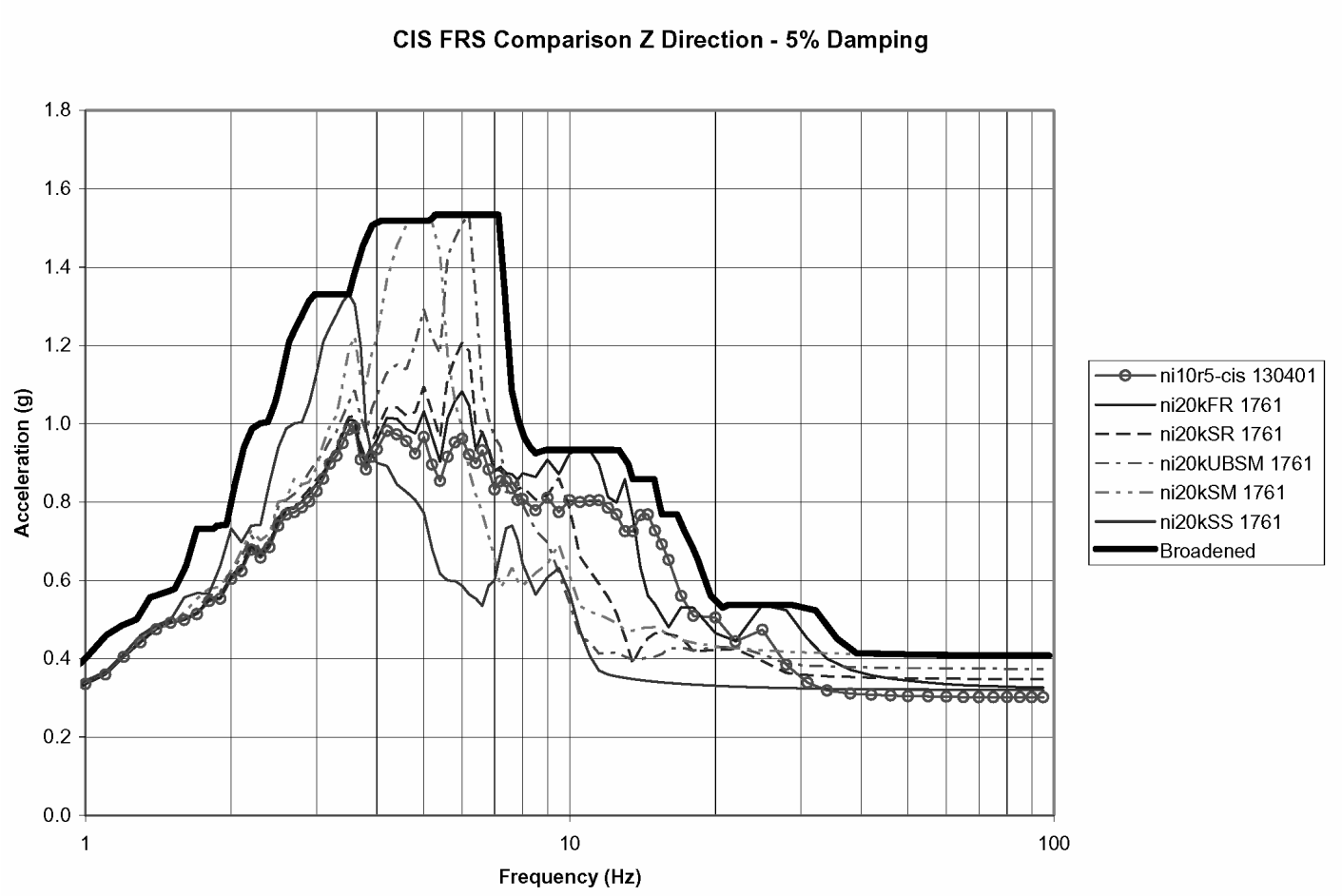

Figure 3G.4-5Z

Z Direction FRS for Node 130401 (NI10) or 1761 (NI20) CIS at Reactor Vessel Support Elevation of 100′

NRC 011
NRC 041

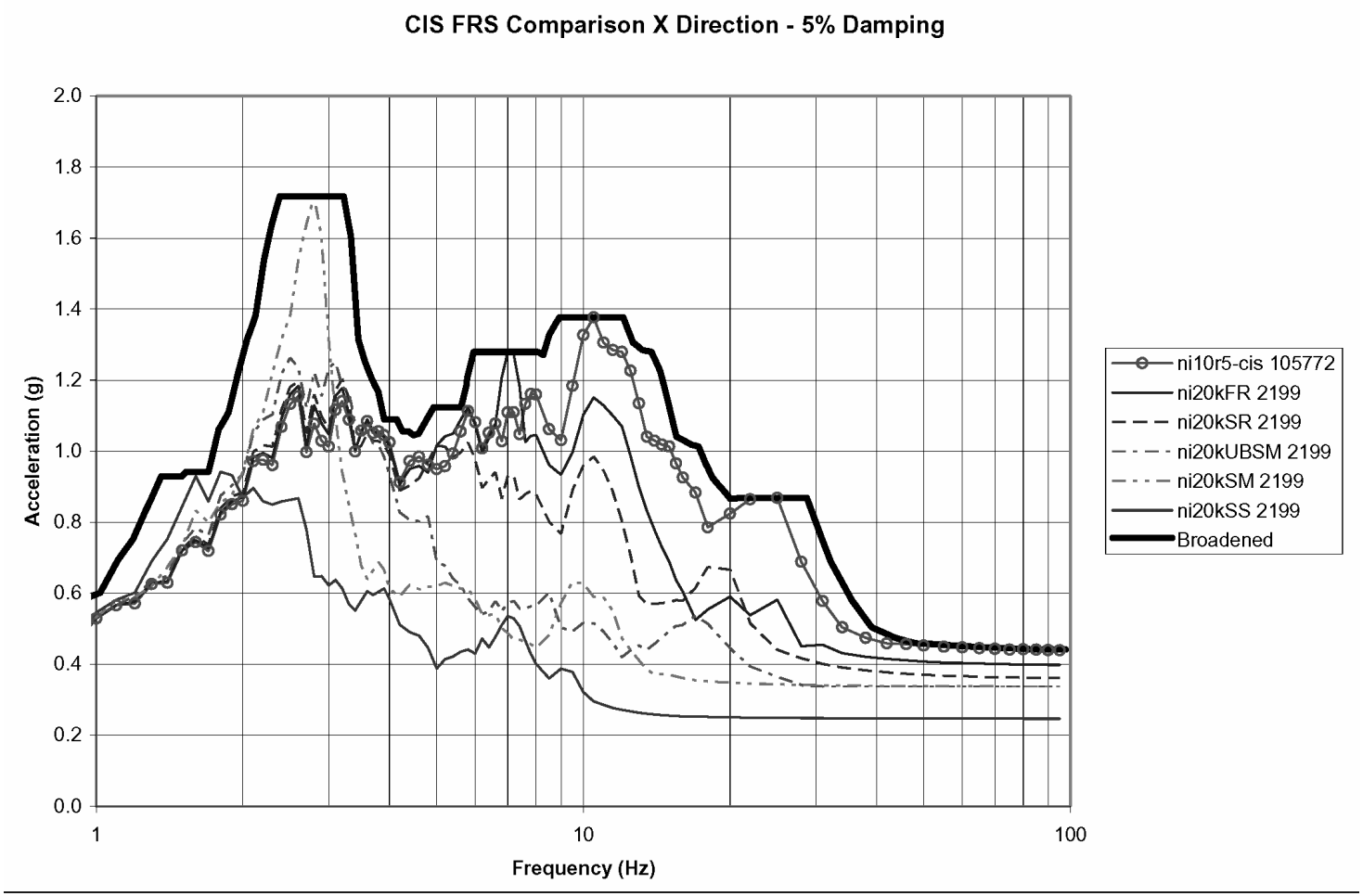

Figure 3G.4-6X

X Direction FRS for Node 105772 (NI10) or 2199 (NI20)
CIS at Operating Deck Elevation 134.25′

NRC 011
NRC 041

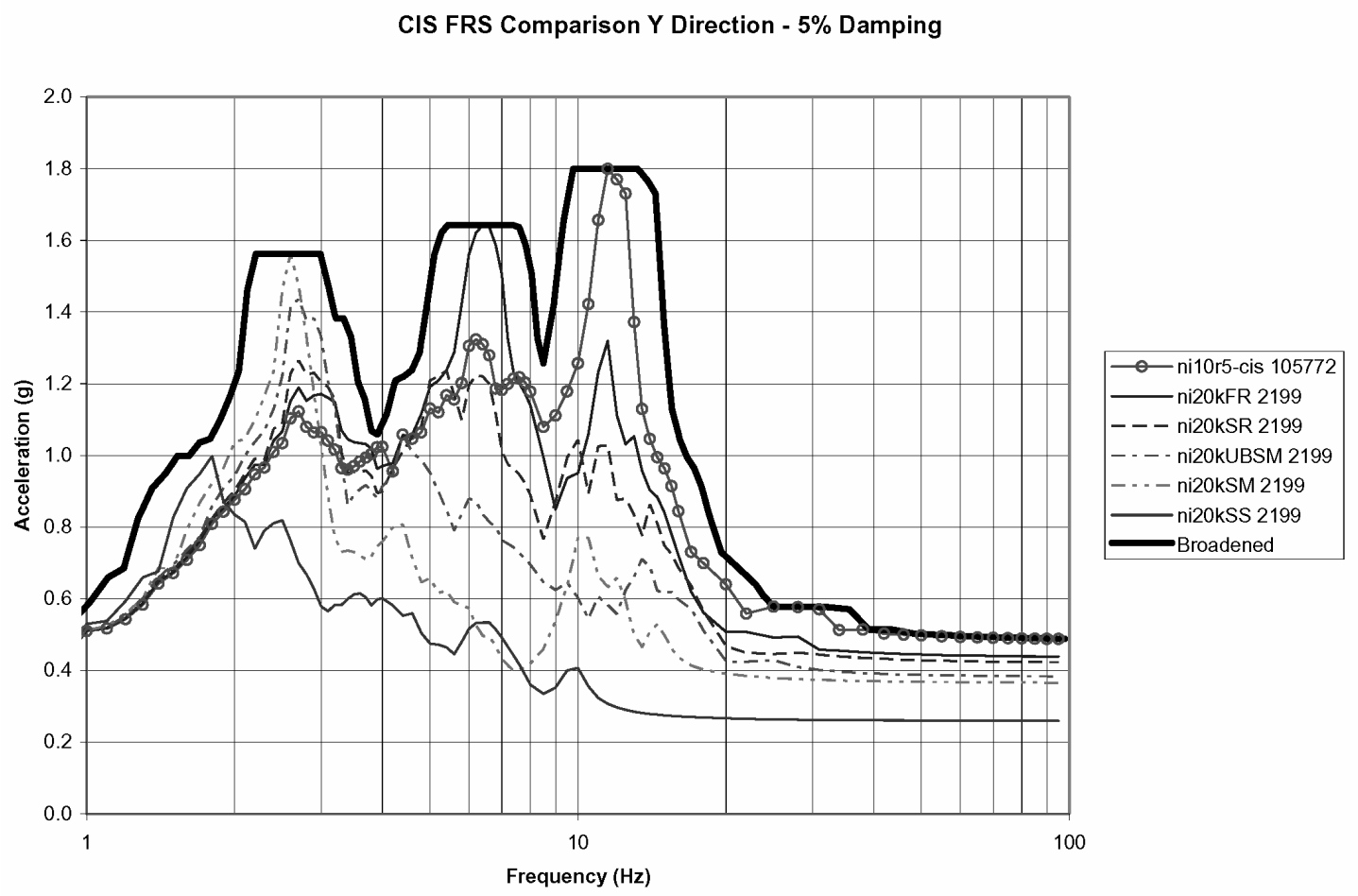

Figure 3G.4-6Y

Y Direction FRS for Node 105772 (NI10) or 2199 (NI20) CIS at Operating Deck Elevation 134.25′

NRC 011
NRC 041

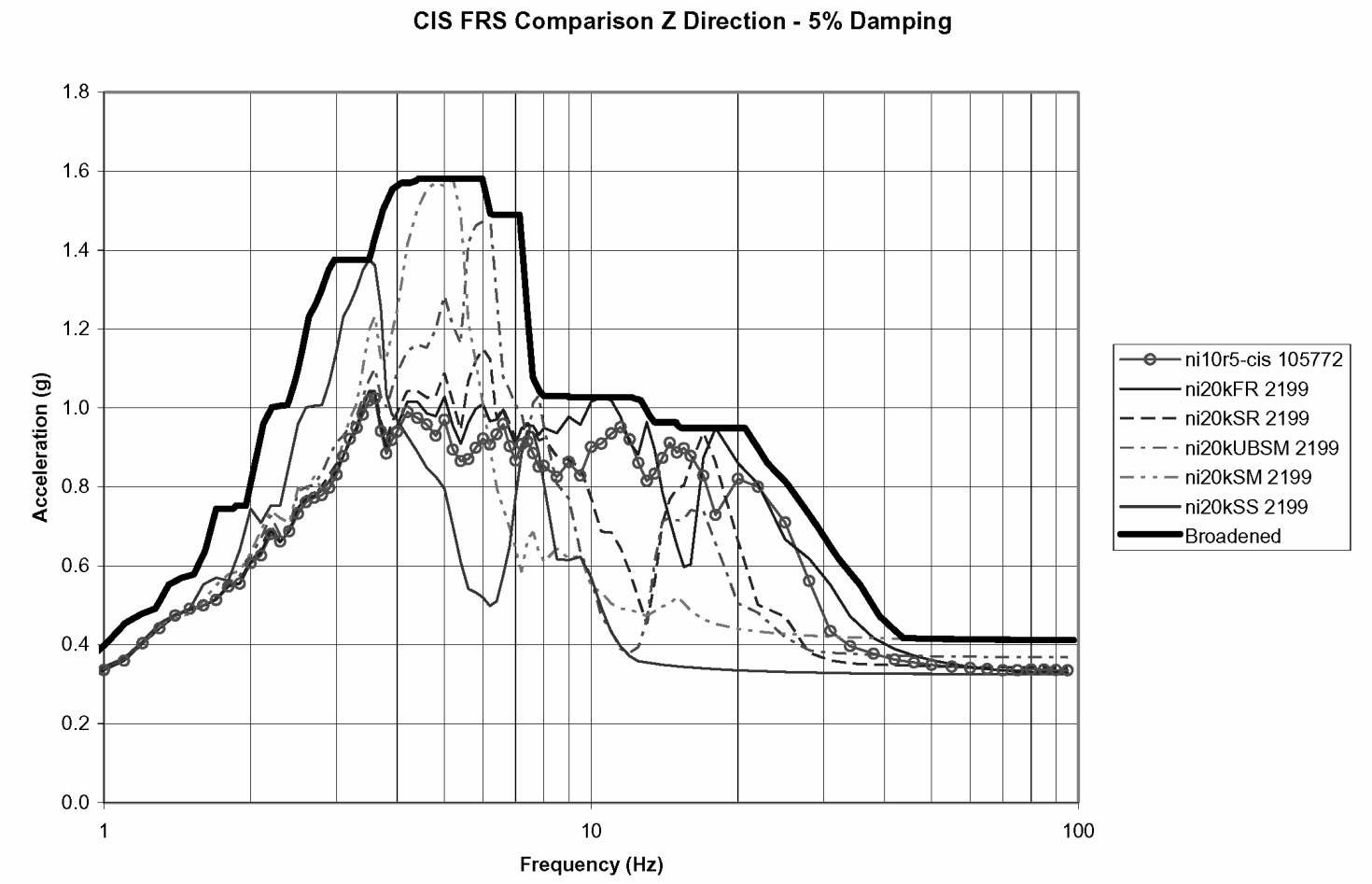

Figure 3G.4-6Z

Z Direction FRS for Node 105772 (NI10) or 2199 (NI20)
CIS at Operating Deck Elevation 134.25′

NRC 011
NRC 041

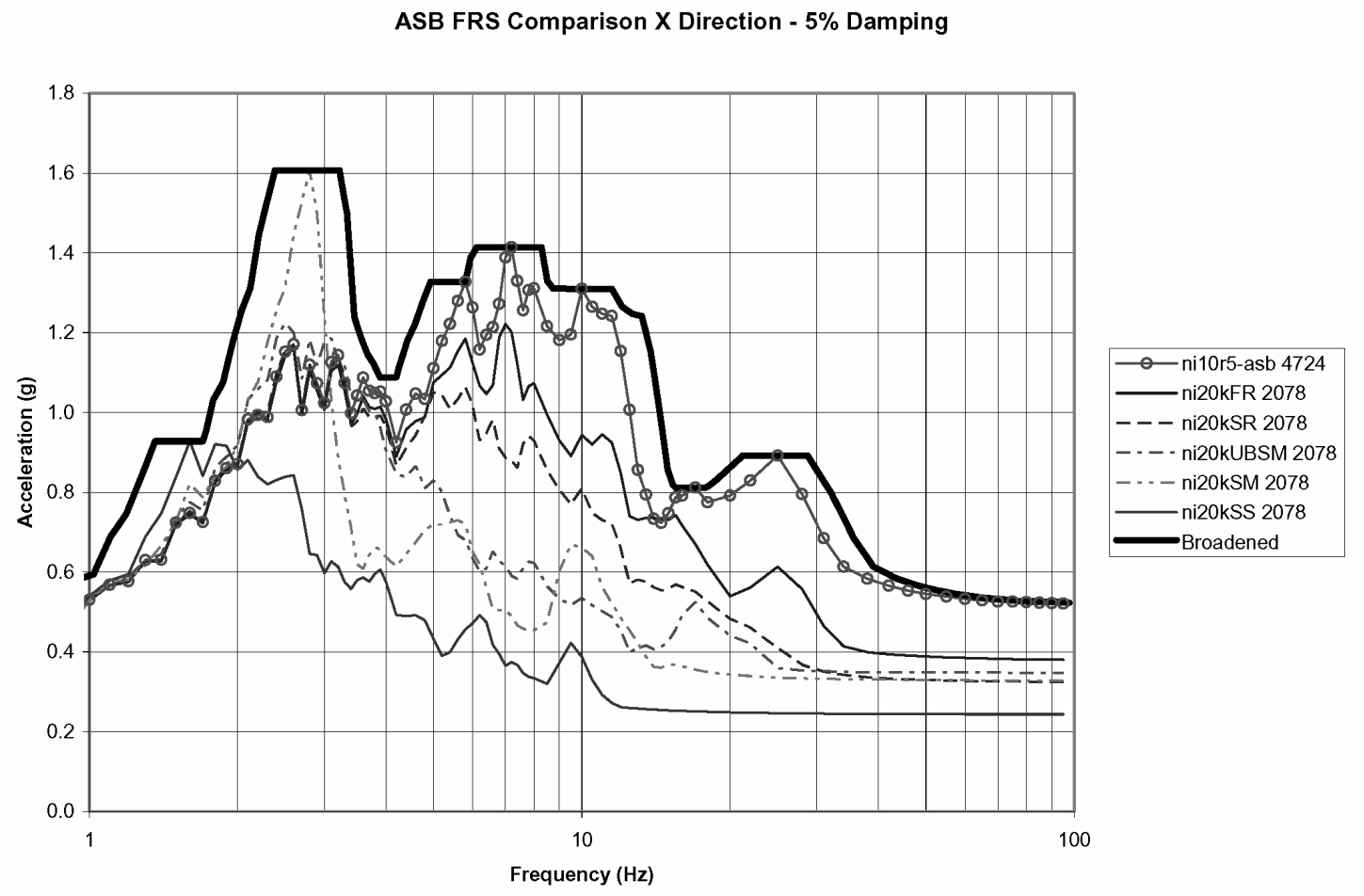

Figure 3G.4-7X

X Direction FRS for Node 4724 (NI10) or 2078 (NI20)
ABS Control Room Side Elevation 116.50′

NRC 011
NRC 041

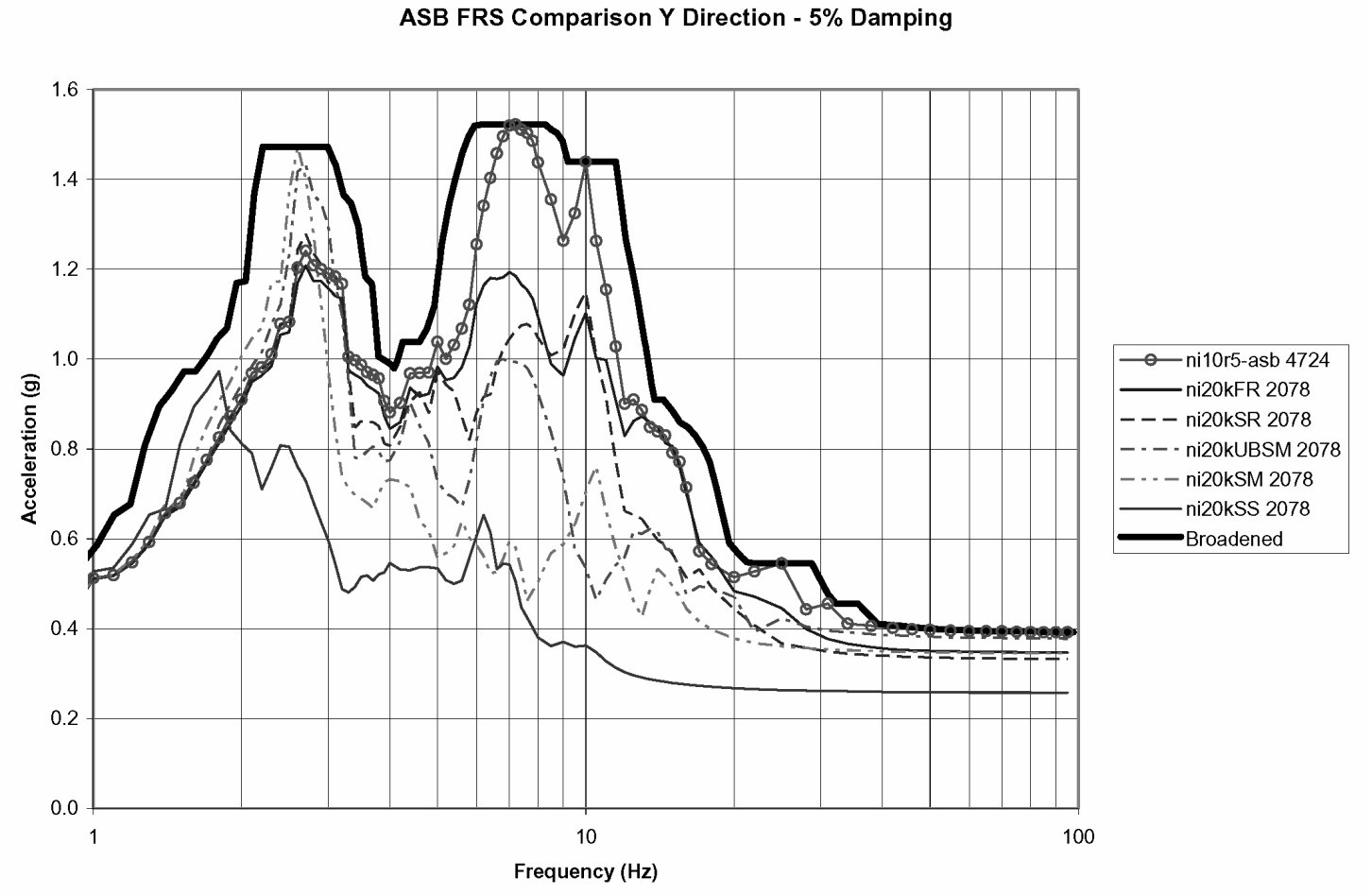

Figure 3G.4-7Y

Y Direction FRS for Node 4724 (NI10) or 2078 (NI20)
ABS Control Room Side Elevation 134.88′

NRC 011
NRC 041

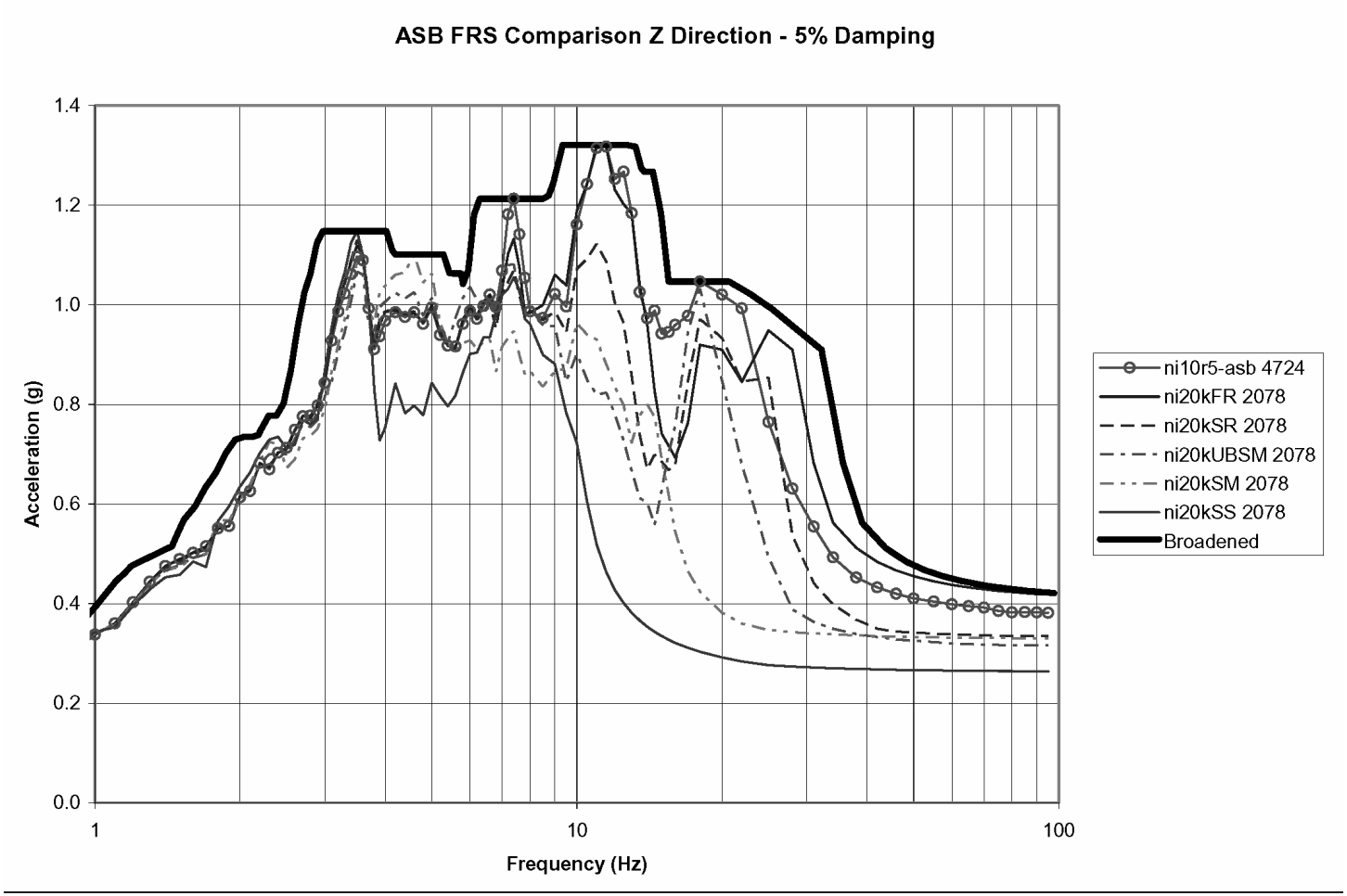

Figure 3G.4-7Z

Z Direction FRS for Node 4724 (NI10) or 2078 (NI20)
ABS Control Room Side Elevation 134.88′

NRC 011
NRC 041

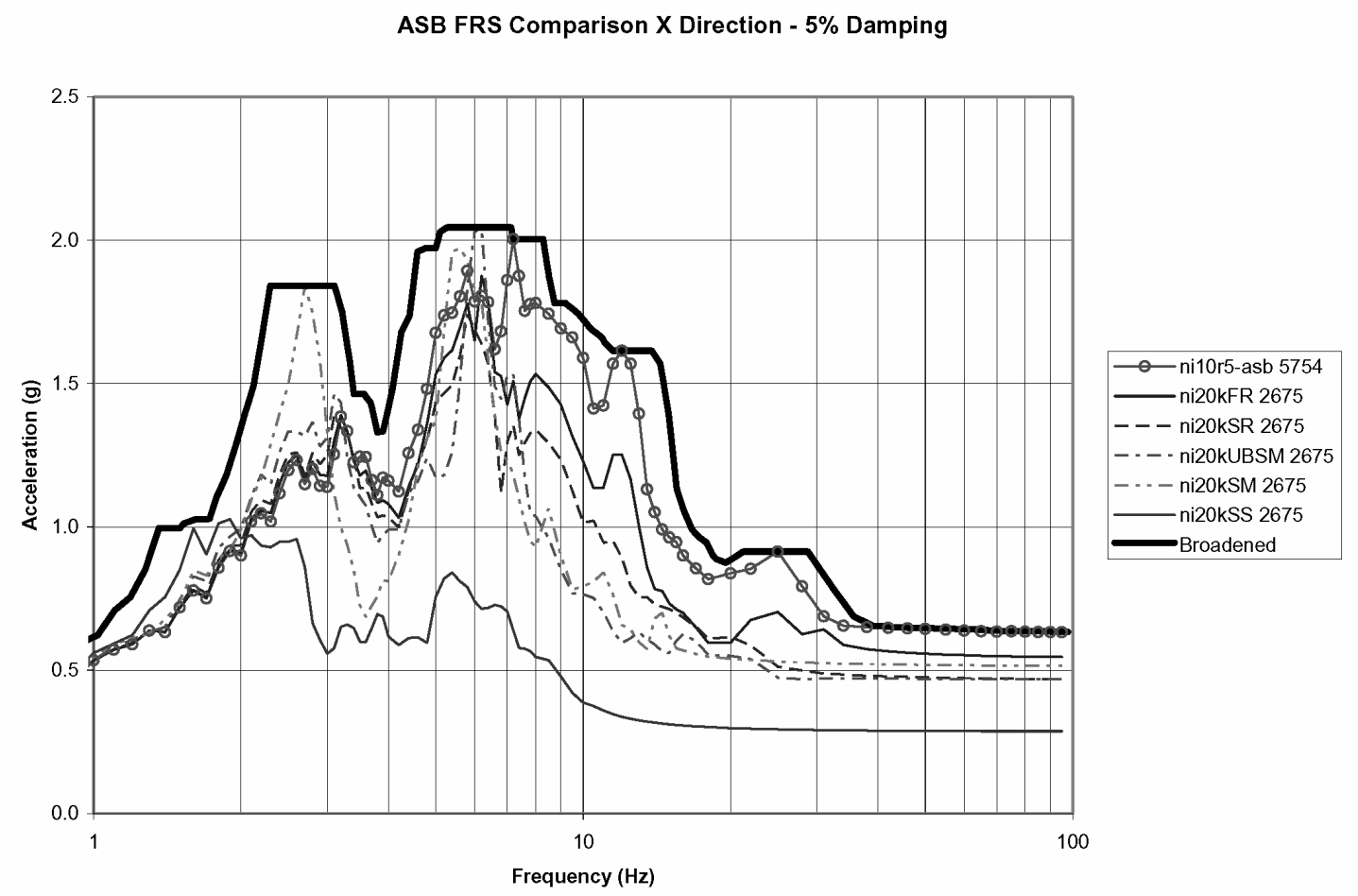

Figure 3G.4-8X

X Direction FRS for Node 5754 (NI10) or 2675 (NI20)
ABS Fuel Building Roof Elevation 179.19′

NRC 011
NRC 041

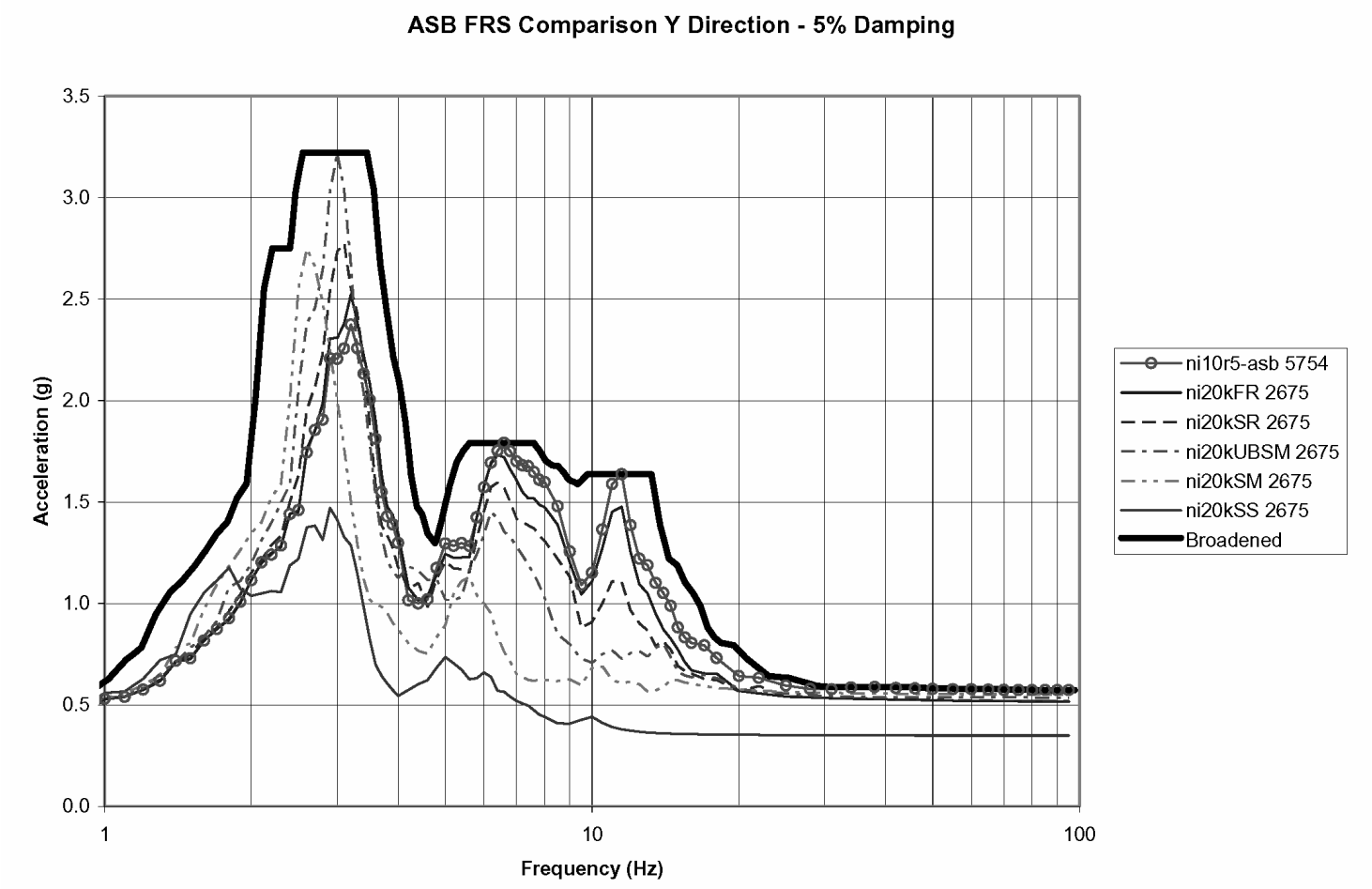

Figure 3G.4-8Y

Y Direction FRS for Node 5754 (NI10) or 2675 (NI20)
ABS Fuel Building Roof Elevation 179.19′

NRC 011
NRC 041

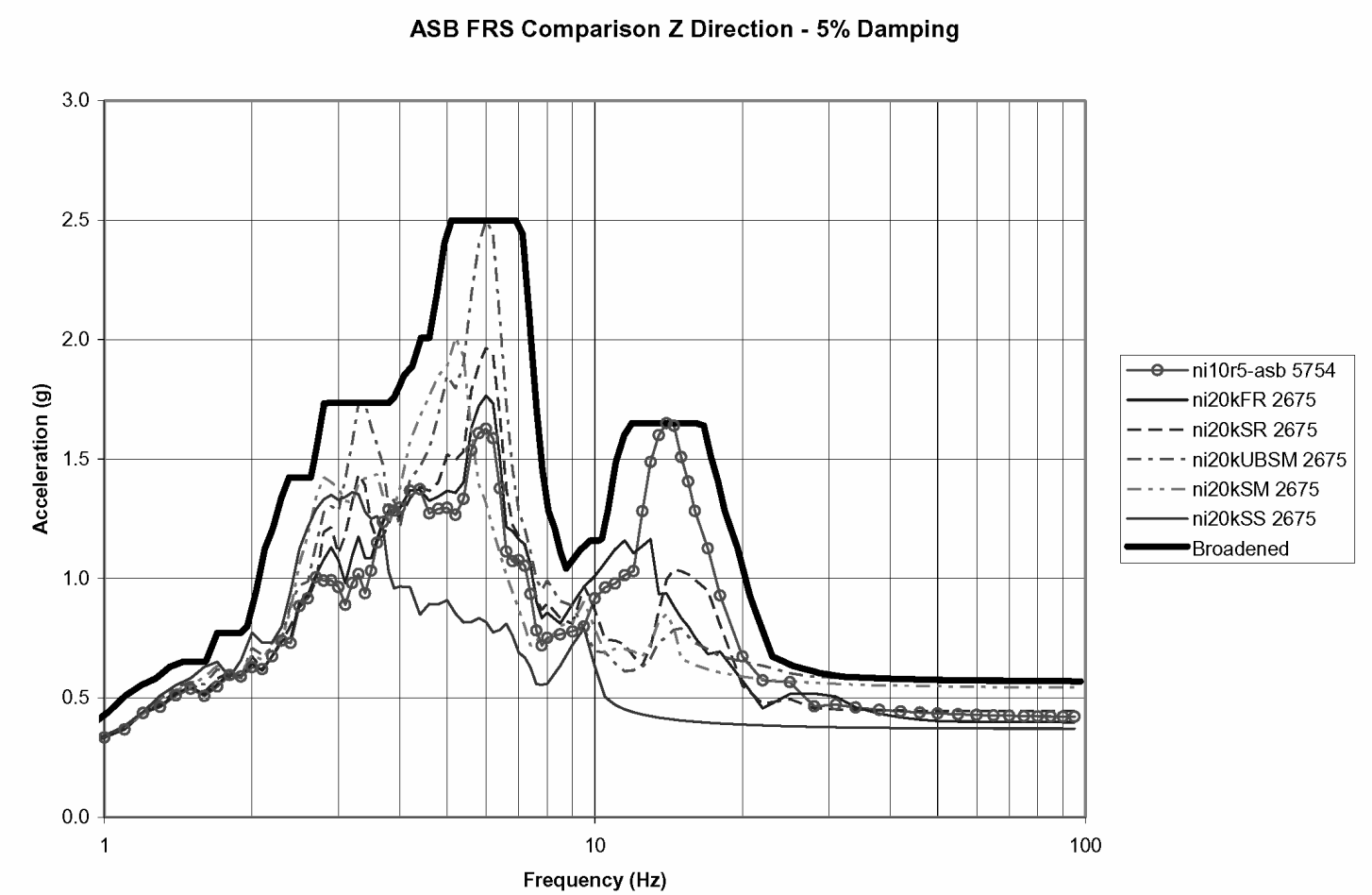

Figure 3G.4-8Z

Z Direction FRS for Node 5754 (NI10) or 2675 (NI20)
ABS Fuel Building Roof Elevation 179.19′

NRC 011
NRC 041

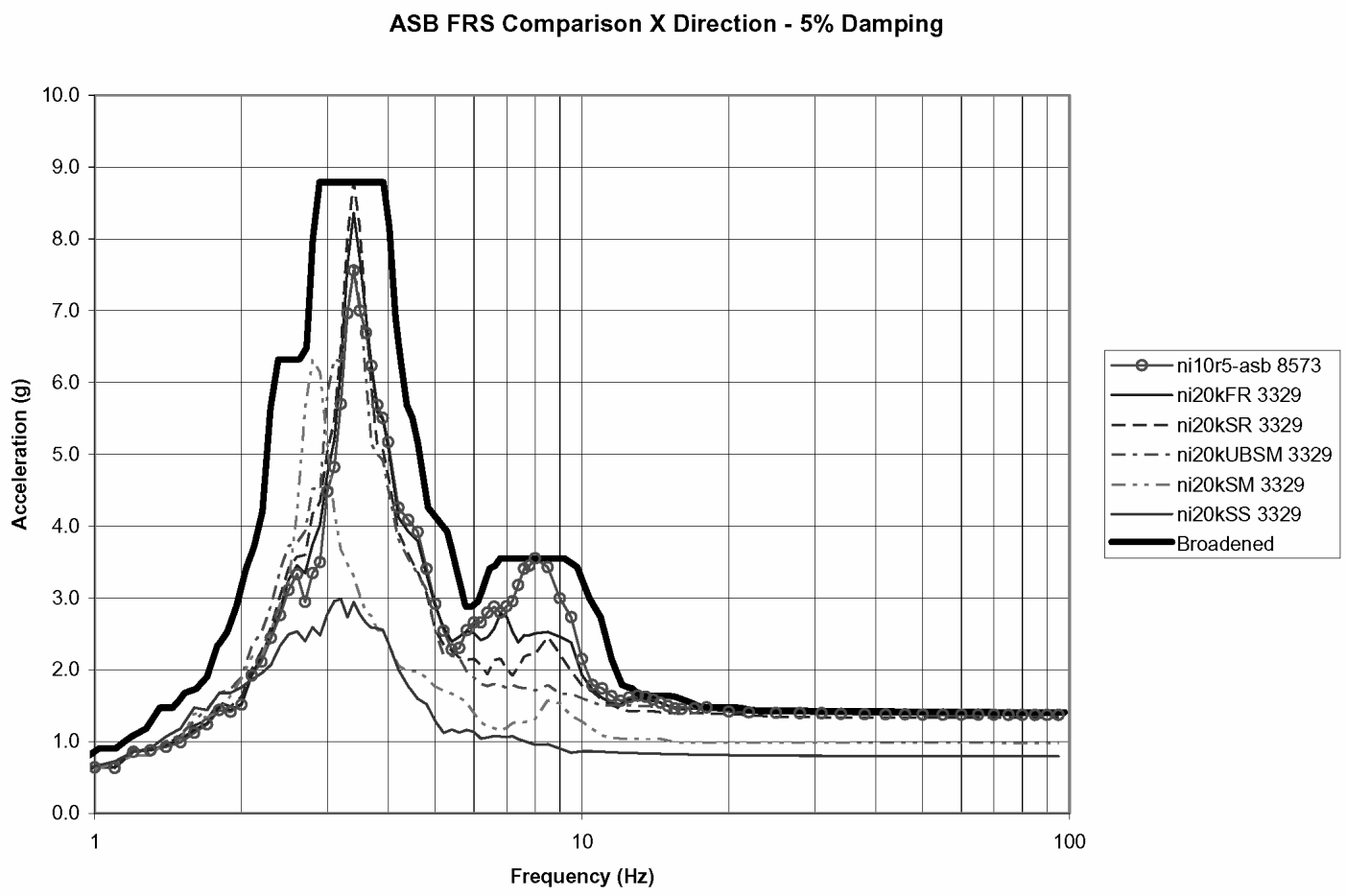

Figure 3G.4-9X

X Direction FRS for Node 2862 (NI10) or 3329 (NI20)
ABS Shield Building Roof Elevation 327.41′

NRC 011
NRC 041

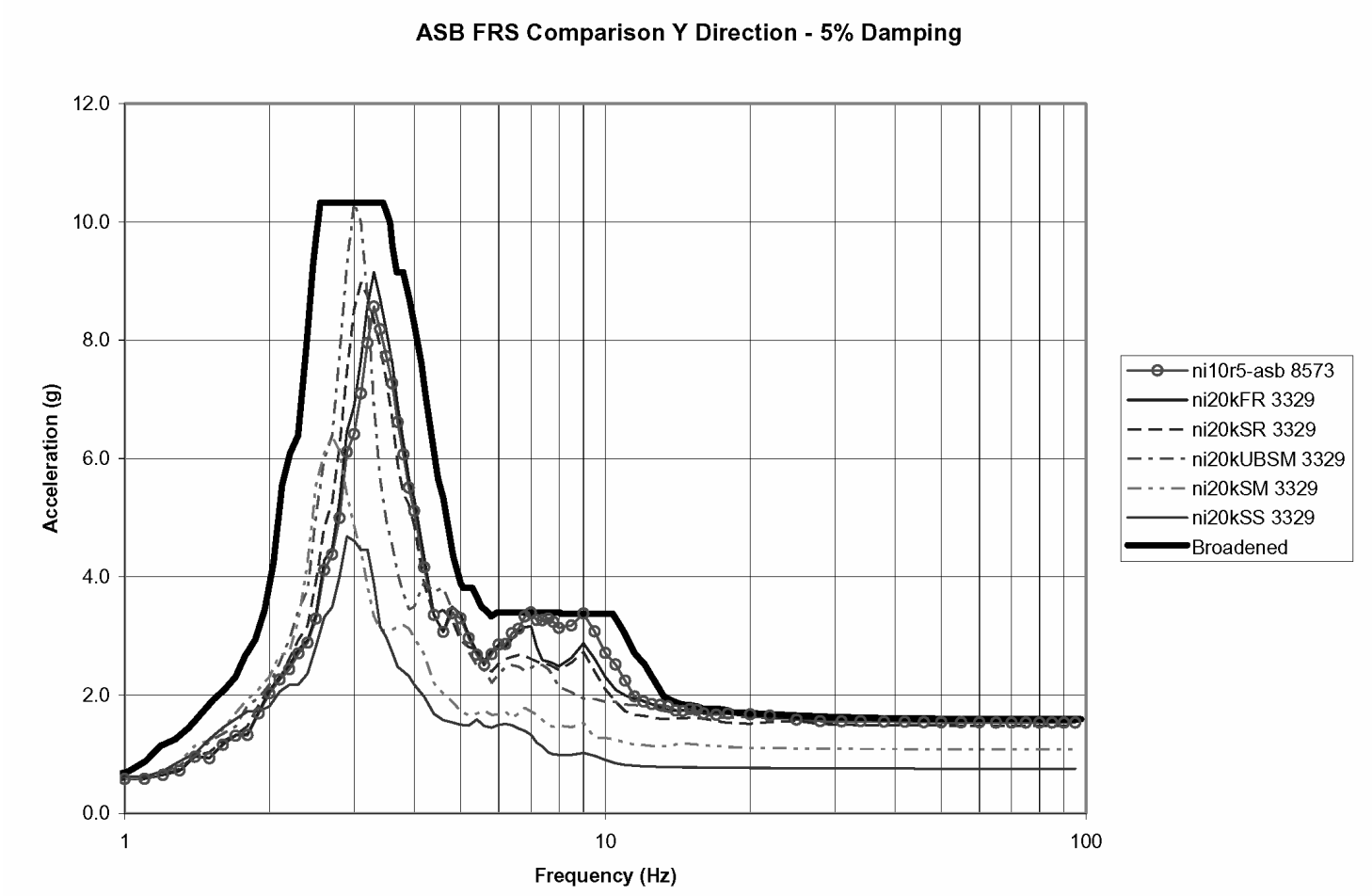

Figure 3G.4-9Y

Y Direction FRS for Node 2862 (NI10) or 3329 (NI20)
ABS Shield Building Roof Elevation 327.41′

NRC 011
NRC 041

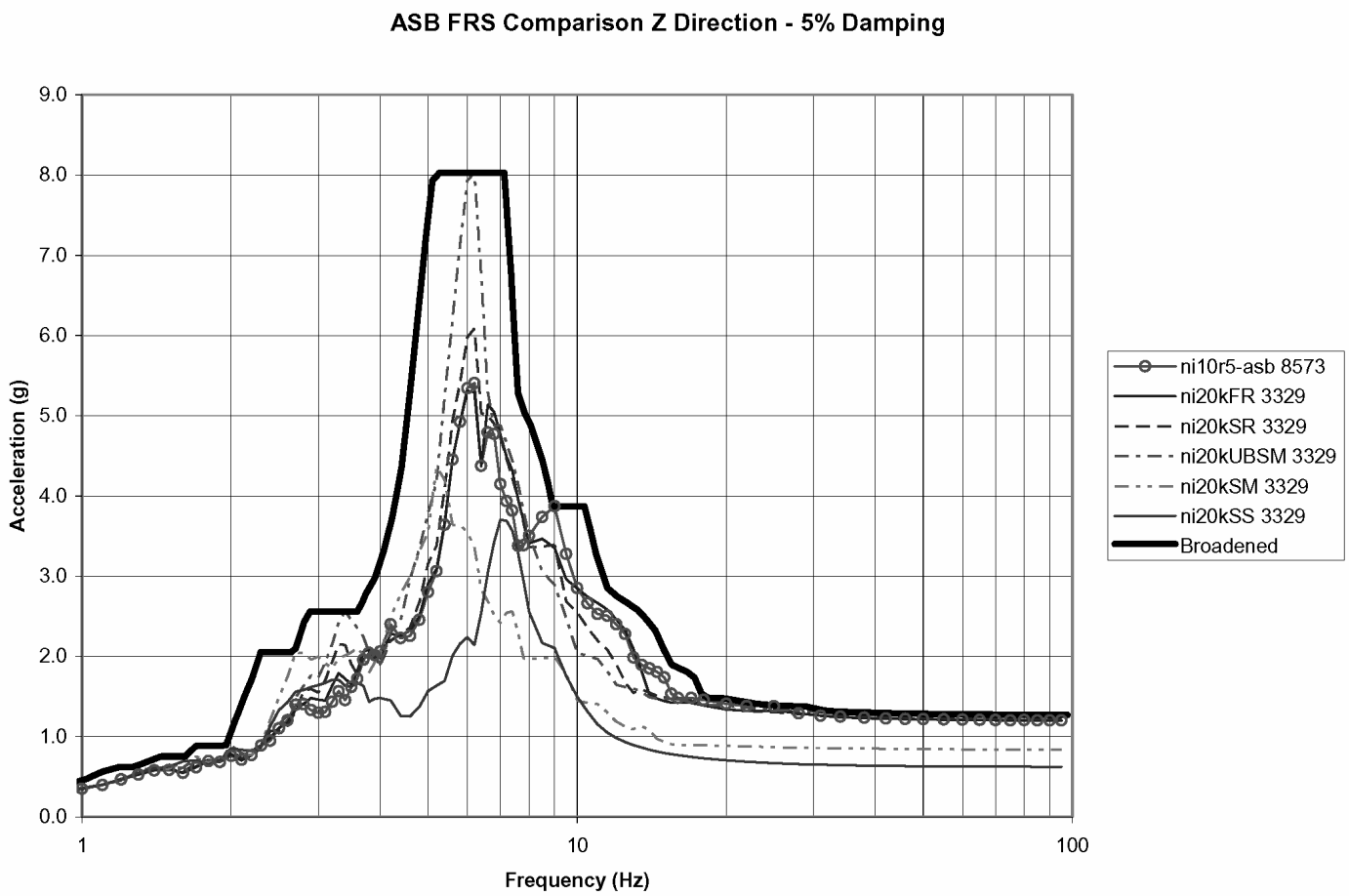

Figure 3G.4-9Z

Z Direction FRS for Node 2862 (NI10) or 3329 (NI20)
ABS Shield Building Roof Elevation 327.41′

NRC 011
NRC 041

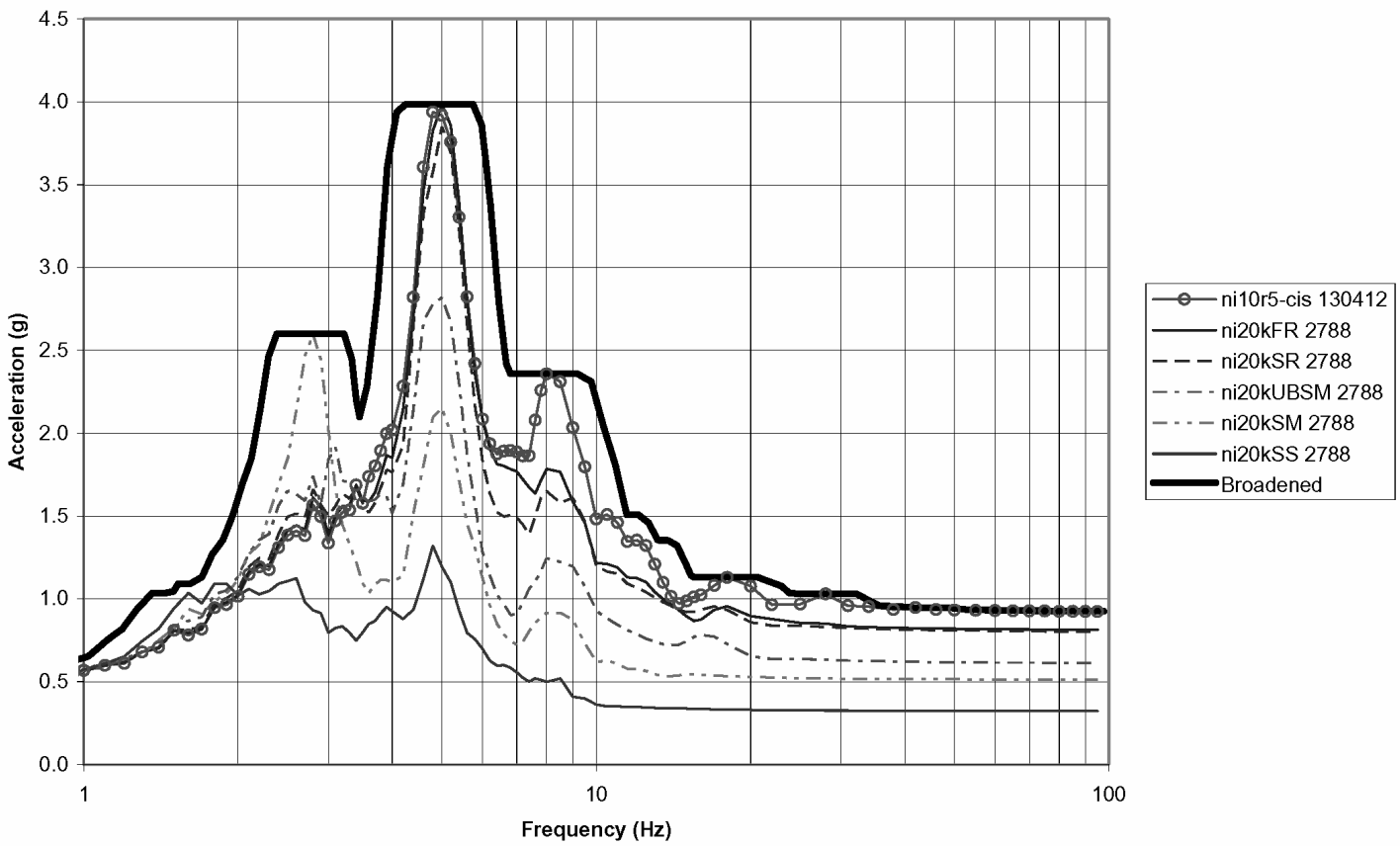

Figure 3G.4-10X

X Direction FRS for Node 130412 (NI10) or 2788 (NI20)
SCV Near Polar Crane Elevation 224.00′

NRC 011
NRC 041

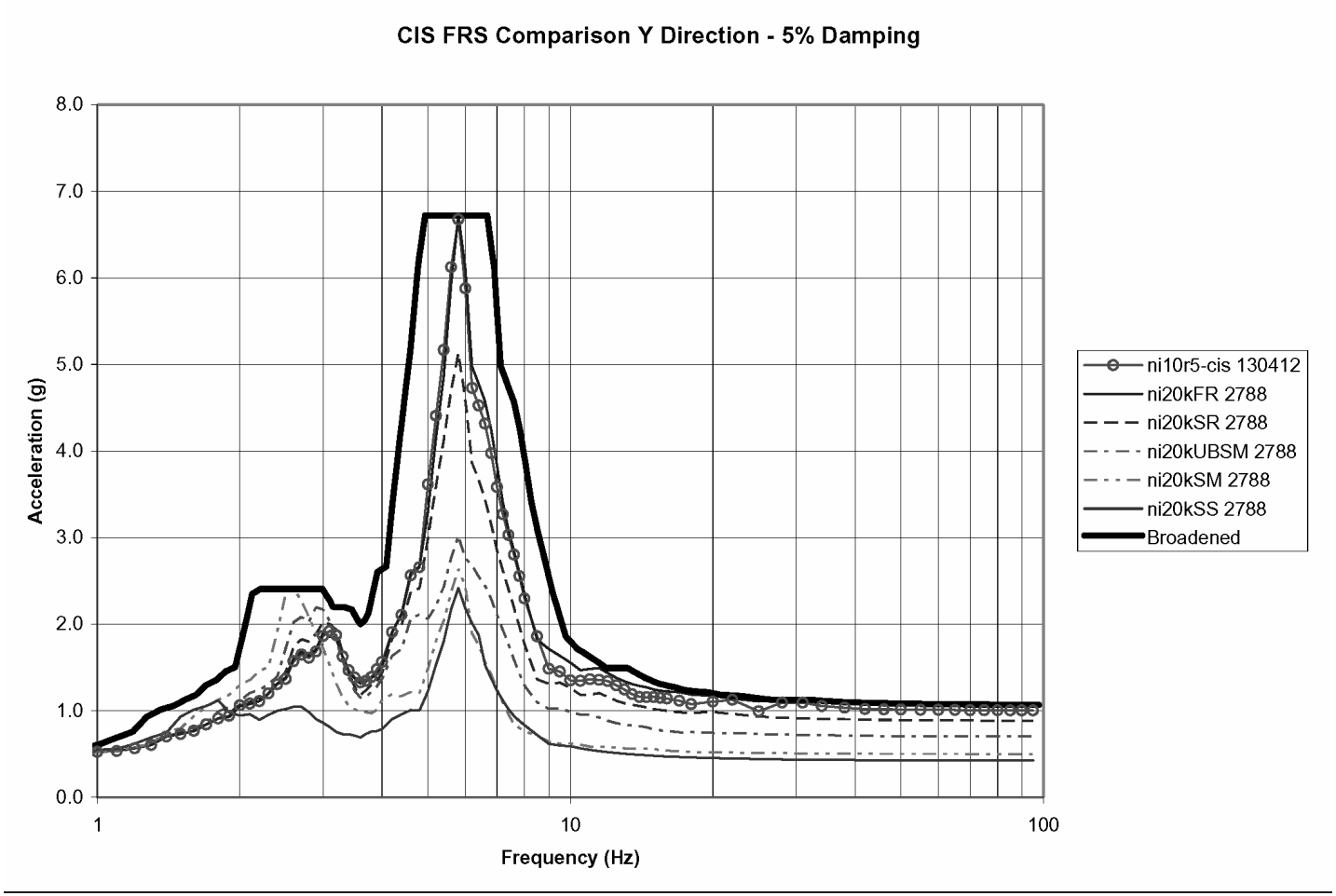

Figure 3G.4-10Y

Y Direction FRS for Node 130412 (NI10) or 2788 (NI20)
SCV Near Polar Crane Elevation 224.00′

NRC 011
NRC 041

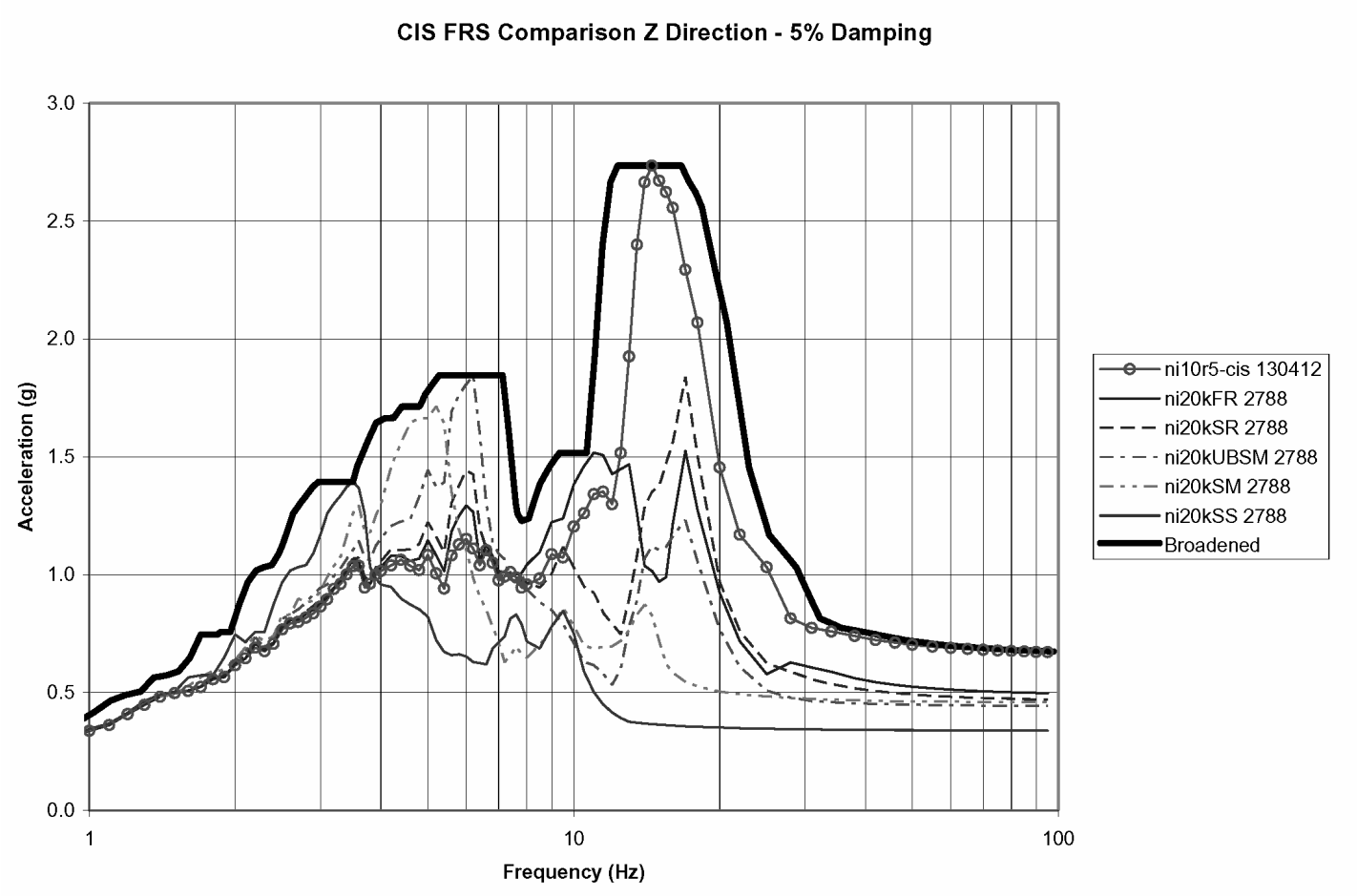

Figure 3G.4-10Z

Z Direction FRS for Node 130412 (NI10) or 2788 (NI20)
SCV Near Polar Crane Elevation 224.00′

APPENDIX 3I EVALUATION FOR HIGH FREQUENCY SEISMIC INPUT

3I.1 Introduction

The seismic analysis and design of the AP1000 plant is based on the Certified Seismic Design Response Spectra (CSDRS) shown in subsection 3.7.1.1. These spectra are based on Regulatory Guide 1.60 with an increase in the 25 hertz region. Ground Motion Response Spectra (GMRS) for some Central and Eastern United States rock sites show higher amplitude at high frequency than the CSDRS. Evaluations are described in this appendix for a GMRS with high frequency for the seismic input at a ~~at the Bellefonte~~ site where the nuclear island is founded on hard rock. The resulting spectra of this site is shown in Figure 3I.1-1 and Figure 3I.1-2 and compares ~~the~~this hard rock high frequency (HRHF) GMRS ~~(based on Bellefonte input)~~ at the foundation level against the AP1000 CSDRS for both the horizontal and vertical directions for 5% damping. The ~~Bellefonte~~ HRHF GMRS exceed the CSDRS for frequencies above about 15 Hz. NRC 163

High frequency seismic input is generally considered to be non-damaging as described in Reference I.1. The evaluation of the AP1000 nuclear island for the high frequency input is based on the analysis of a limited sample of structures, components, supports, and piping to demonstrate that the high frequency seismic response is non-damaging. The evaluation includes building structures, reactor pressure vessel and internals, primary component supports, primary loop nozzles, piping, and equipment.

This appendix describes the methodology and criteria used in the evaluation to confirm that the high frequency input is not damaging to equipment and structures qualified by analysis for the AP1000 CSDRS. It provides supplemental criteria for selection and testing of equipment whose function might be sensitive to high frequency. The results of the high frequency evaluation demonstrating that the AP1000 plant is qualified for this type of input are documented in a technical report (Reference I.2). This report will provide a summary of the analysis and test results.

3I.2 High Frequency Seismic Input

Presented in Figures 3.I-1 and 3.I-2 is a comparison of the horizontal and vertical GMRS from the ~~Bellefonte~~ HRHF site and the AP1000 CSDSR. The ~~Bellefonte~~ HRHF GMRS presented is calculated at foundation level (39.5' below grade), at the upper most competent material and treated as an outcrop for calculation purposes. NRC 163

For each direction, the ~~Bellefonte~~ HRHF GMRS exceeds the design spectra in higher frequencies (greater than 15 Hz horizontal and 20 Hz vertical). The spectra are used for the GMRS. If necessary, the ~~Bellefonte~~ HRHF GMRS spectra are enhanced at low frequencies so that GMRS fully envelopes all of the hard rock sites. NRC 163 NRC 163

3I.3 NI Models Used To Develop High Frequency Response

The NI20 nuclear island model described in Appendix 3G is analyzed in SASSI using the ~~Bellefonte~~ HRHF time histories applied at foundation level to obtain the motion at the base. The NI20 Model has sufficient mesh size to transmit the HRHF input up to 80 Hz. This was confirmed NRC 163

NRC 163

by comparing the dynamic response of the NI20 to that of the NI10 model, a model of much finer mesh.

~~To assure that the high frequency content at the base is transferred up the nuclear island structures and equipment, the base motion is applied to the NI10 ANSYS model described in Appendix 3G. The analyses are performed using the foundation motion and the NI10 surface mounted model since side soil effects are considered to be small because of the small deformation associated with the high frequency response on hard rock. These analyses are performed for incoherent motion using the coherency function described in Reference I.3.~~

~~The fixed base NI10 ANSYS nuclear island model defined in Appendix 3G is analyzed using the basemat response from the NI20 incoherent analyses as input The NI10 model has greater refinement than the NI20 model and is therefore better suited for the high frequency building response.~~

3I.4 Evaluation Methodology

The demonstration that the AP1000 nuclear power plant is qualified for the high frequency seismic response does not require the analysis of the total plant. The evaluations made are of representative systems, structures, and components, selected by screening, as potentially sensitive to high frequency input in locations where there were exceedances in the high frequency region. Acceptability of this sample is considered sufficient to demonstrate that the AP1000 is qualified.

The high frequency seismic analyses that are performed use time history or broadened response spectra. The analysis is not performed using the envelope spectra of the CSDRS and the GMRS. Separate analyses with each spectra are used.

The evaluations performed assess the ability of the system, structure, or component to maintain its safety function.

Supplementary analyses are performed as needed to show that high frequency floor response spectra exceedances are not damaging. These analyses can include: gap nonlinearities; material inelastic behavior; multi point response spectra analyses where the high frequency response excites a local part of the system. Tests on equipment are specified as needed where function cannot be demonstrated by analysis, or analysis is not appropriate.

3I.5 General Selection Screening Criteria

The following general screening criteria are used to identify representative AP1000 systems, structures, and components (SSCs) for the samples to be evaluated to demonstrate acceptability of the AP1000 nuclear power plant for the high frequency motion.

- Select systems, structures, and components based on their importance to safety. This includes the review of component safety function for the SSE event and its potential failure modes due to an SSE. Those components whose failure modes would result in safe shutdown are excluded.

- Select systems, structures, and components that are located in areas of the plant that experience large high frequency seismic response.

The evaluation of the primary component supports and reactor coolant loop nozzles consists of a comparison of the loads from the high frequency input to those obtained from the Regulatory Guide 1.60 (modified) input. These items are considered qualified for the high frequency input if the seismic loads from the Regulatory Guide 1.60 (modified) envelope those from the high frequency input. If there is any exceedance, then an evaluation is made combining the high frequency loads with the other load components (e.g., thermal, pressure, dead) and a comparison made to the design loads. If the design loads envelope the load combinations that include the high frequency seismic input, then the nozzles and supports are considered qualified for the high frequency input.

3I.6.3 Piping Systems

Safety class piping analysis packages were reviewed and include a mixture of ASME Class 1, 2, and 3 piping systems. They typically contain at least one valve. The piping systems are mainly large bore of various size (3-inch diameter to 38-inch diameter), and some of small bore (2 inches and lower). The piping systems are in both the containment and auxiliary building.

The piping systems chosen for evaluation are those that are susceptible to high frequency as measured by their mass participation in the higher frequencies, are representative piping systems that contain valves and equipment nozzles, and are located in areas susceptible to high frequency
NRC 163 ~~Bellefonte~~ HRHF GMRS spectra level response. At least two candidate piping analysis packages are identified for evaluation that meet these screening criteria.

The pipe stresses, nozzle loads, and valve end loads obtained from both the high frequency input and the Regulatory Guide 1.60 (modified) input are compared. Comparison is also made to the
NRC 163 allowable~~s~~ with the seismic stresses combined with the other stresses associated with the seismic load combination that is applicable as necessary. If the high frequency seismic results are below those associated with the Regulatory Guide 1.60 (modified) results, or below the allowable limits, then the piping system is considered qualified. If necessary, more detailed supplementary analyses will be performed considering one or more of the following:

- Multi-point response spectra input
- Non-linear analysis with gap and material nonlinearities
- Calculation of actual support stiffness in locations where a minimum rigid value was used

3I.6.4 Electro-Mechanical Equipment Qualification

The groups of safety-related equipment considered for evaluation are those that may be sensitive to the high frequency input. This includes cabinet mounted equipment, field sensors and appurtenants which may be sensitive to high frequency seismic inputs identified in Table 3I.6-1.

Sample safety-related cabinets have been identified that are typically sensitive to seismic input. Evaluations will be performed to verify these cabinets do not have excessive seismic demand on their mounted equipment, the cabinet designs do not require changes due to the high frequency input, and the cabinets will maintain their structural integrity during the high frequency input. Time history analyses of these cabinets are performed for both the Regulatory Guide 1.60 (modified) and the high frequency inputs so that comparisons can be made to their seismic

response from both seismic inputs. This analytical study is to conclude that safety-related equipment may be screened and grouped as follows:

Screening Process

Group No. 1:

Rugged equipment with high frequency content above 60 Hz. This group will require no additional evaluation for high frequency seismic inputs.

Group No. 2:

Cabinets and other equipment which exhibit most of their effective mass (80% and higher) with modes below 15 Hz. This group will require no additional evaluation for high frequency seismic inputs.

Group No. 3:

NRC 163

Safety-related equipment which exhibit dominant natural frequencies in HRHF exceedance range. The safety-related equipment will be subjected to supplemental high frequency seismic evaluation to verify acceptability.~~Cabinet and other equipment which exhibit dominant natural frequencies between 15 Hz and 60 Hz. This group is classified into three sub-groups as follows.~~

~~A. Tune the mounting configurations of the cabinet to reduce its dominant natural frequencies below 15 Hz (equal to group No. 2. This subgroup will require no additional evaluation for high frequency seismic inputs.)~~

~~B. Tune the mounting configurations of the cabinet to shift dominant natural frequencies higher than 60 Hz (mainly in the vertical direction) (equal to group No. 1. This subgroup will require no additional evaluation for high frequency seismic inputs.)~~

~~C. This group will have dominant natural frequencies in the range of 20 to 60 Hz and can't be shifted out of this range. This group is the only group required high-frequency evaluations. It can be evaluated as follows:~~

~~1. If cabinet and equipment structures have been seismically tested and qualified to low frequency input higher than the high-frequency seismic requirements or with a ZPA (at 33 Hz) higher than the spectral acceleration of the high-frequency input, then no additional testing or analysis are required.~~

~~2. If not, then structure can be shown qualified by analysis and sensitive components by testing to high frequency excitation.~~

Qualification Process

In the high frequency screening process, the potential failure modes of high frequency sensitive component types and assemblies are important considerations. The following are potential failure modes of high frequency sensitive components/equipment.

- Inadvertent change of state
- Chatter
- Change in accuracy and drift in output signal or set-point
- Electrical connection failure or intermediacy (e.g., poor quality solder joints)
- Mechanical connection failure
- Mechanical misalignment/binding (e.g., latches, plungers)
- Fatigue failure (e.g., solder joints, ceramics, self-taping screws, spot welds)
- Improperly and unrestrained mounted components
- Inadequately secured/locked mechanical fasteners and connections

Components and equipment determined to be exposed to and are high frequency sensitive with potential failure modes involve change of state, chatter, signal change/drift and connection problems shall be demonstrated to be acceptable through the performance of supplemental high frequency qualification testing. Those high frequency sensitive component having failure modes associated with mounting, connections and fasteners, joints, and interface are considered to be qualified by traditional low frequency qualification testing per IEEE Std 344 and/or required quality assurance inspection and process/design controls.

NRC 163 High frequency seismic testing for sensitive equipment will be conducted as a supplemental test to low frequency seismic excitation. High and low frequency seismic R~~r~~equired R~~r~~esponse ~~s~~Spectra (RRS) are separate environments and an envelope RRS covering both would not be representative
NRC 163 of the ~~d~~Design ~~b~~Basis ~~e~~Event (DBE). Testing to a High/Low Frequency Envelope RRS could prove destructive to both the equipment under test and the seismic test table.

When high frequency seismic testing is performed following a low frequency seismic testing, the equipment shall be subjected to the high frequency SSE testing after completion of the low frequency seismic testing. Low level cycling fatigue effects requirement shall be justified represented by low frequency seismic input. No additional low level testing for high frequency excitation is required. One SSE high frequency seismic test will be performed to demonstrate functionality of equipment in its most sensitive electrical configuration.

Acceptance and qualification to the high frequency input is determined based on the comparison of the test levels the components have been analyzed or tested to. For those equipment/components determined to have already been tested to high seismic levels in the high frequency region, no additional testing or justifications will be necessary. A review of seismic testing data is performed to verify that the tested seismic levels envelop the high frequency seismic demand. If these components cannot be shown to be acceptable based on this review, additional testing or justifications may be required to show qualification.

3I.7 References

1. EPRI Draft White Paper, “Considerations for NPP Equipment and Structures Subjected to Response Levels Caused by High Frequency Ground Motions,” Transmitted to NRC March 19, 2007.

2. APP-GW-GLR-115, “Effect of High Frequency Seismic Content on SSCs,” Westinghouse Electric Company LLC.

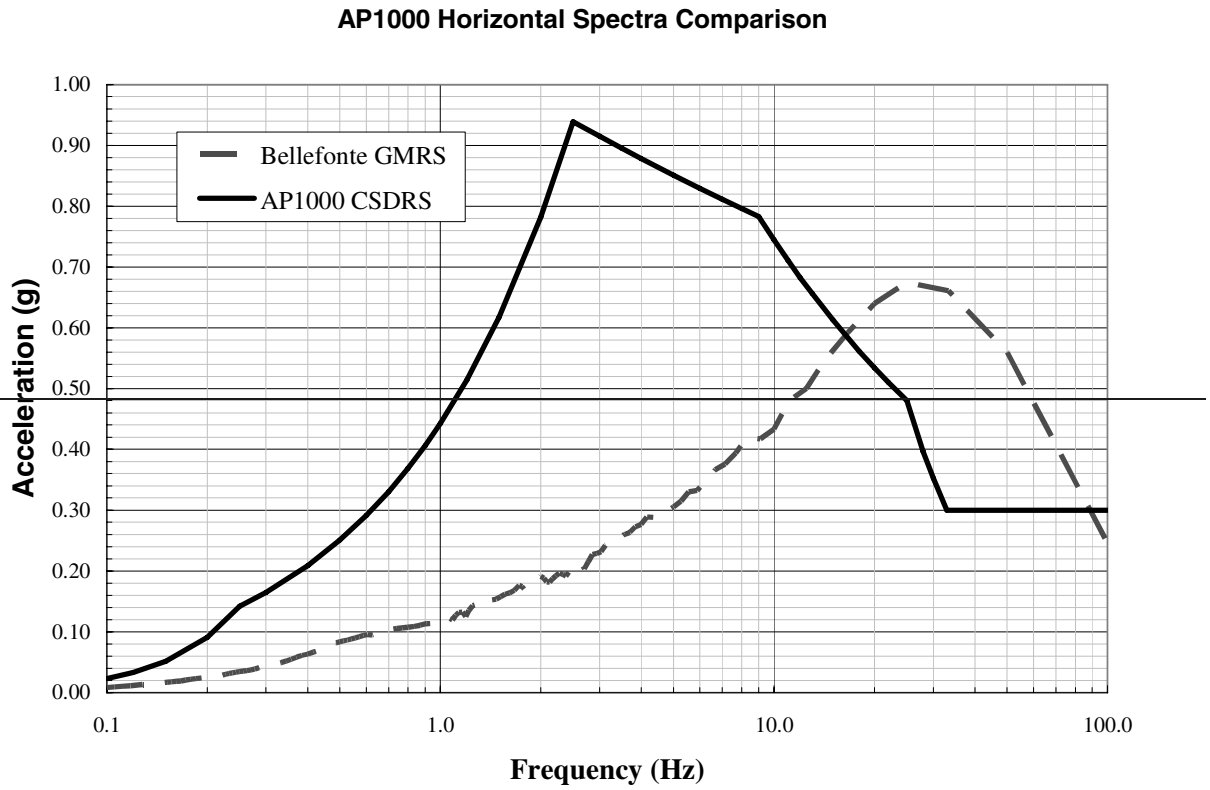
AP1000 Horizontal Spectra Comparison
Bellefonte GMRS
AP1000 CSDRS
Acceleration (g)
1.00
0.90
0.80
0.70
0.60
0.50
0.40
0.30
0.20
0.10
0.00
0.1
1.0
10.0
100.0
Frequency (Hz)

NRC 163

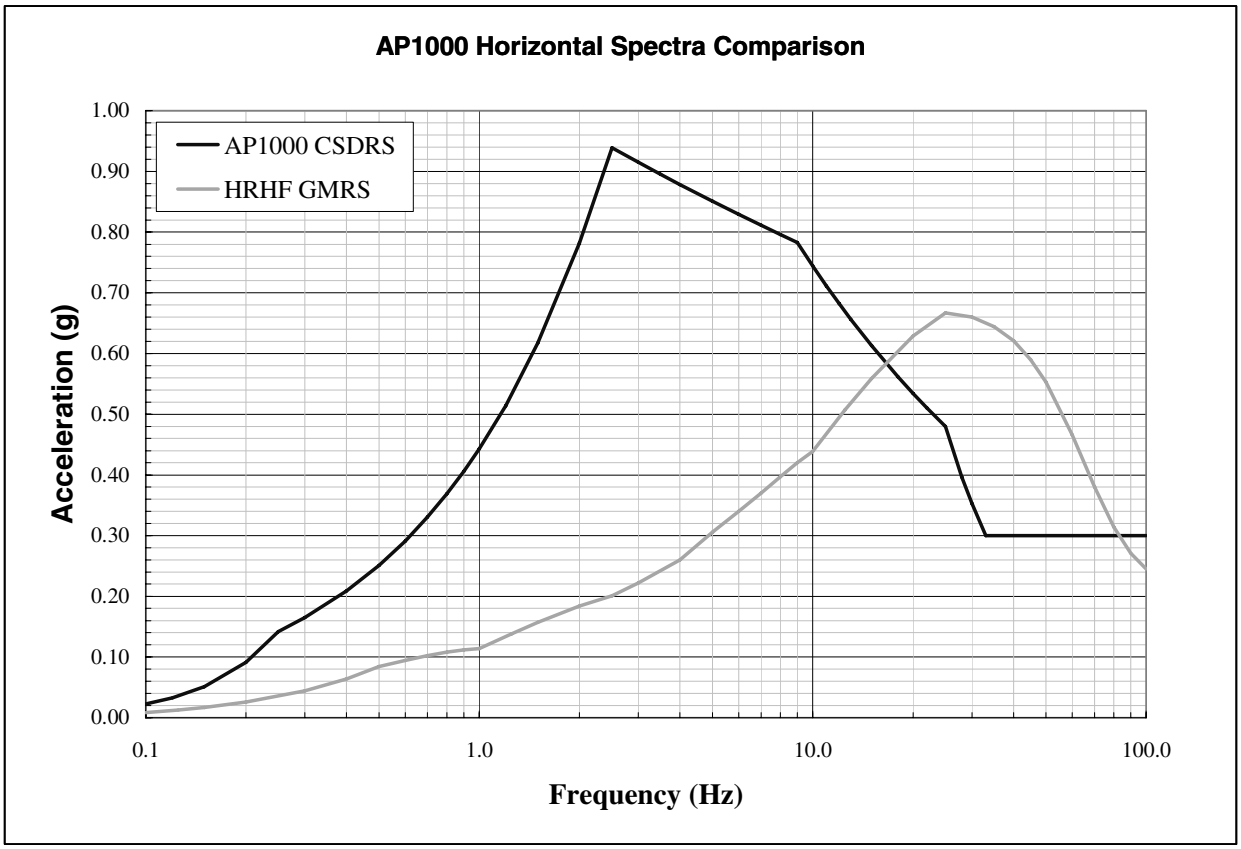

Figure 3I.1-1

Comparison of Horizontal AP1000 CSDRS and ~~Bellefonte~~ HRHF GMRS

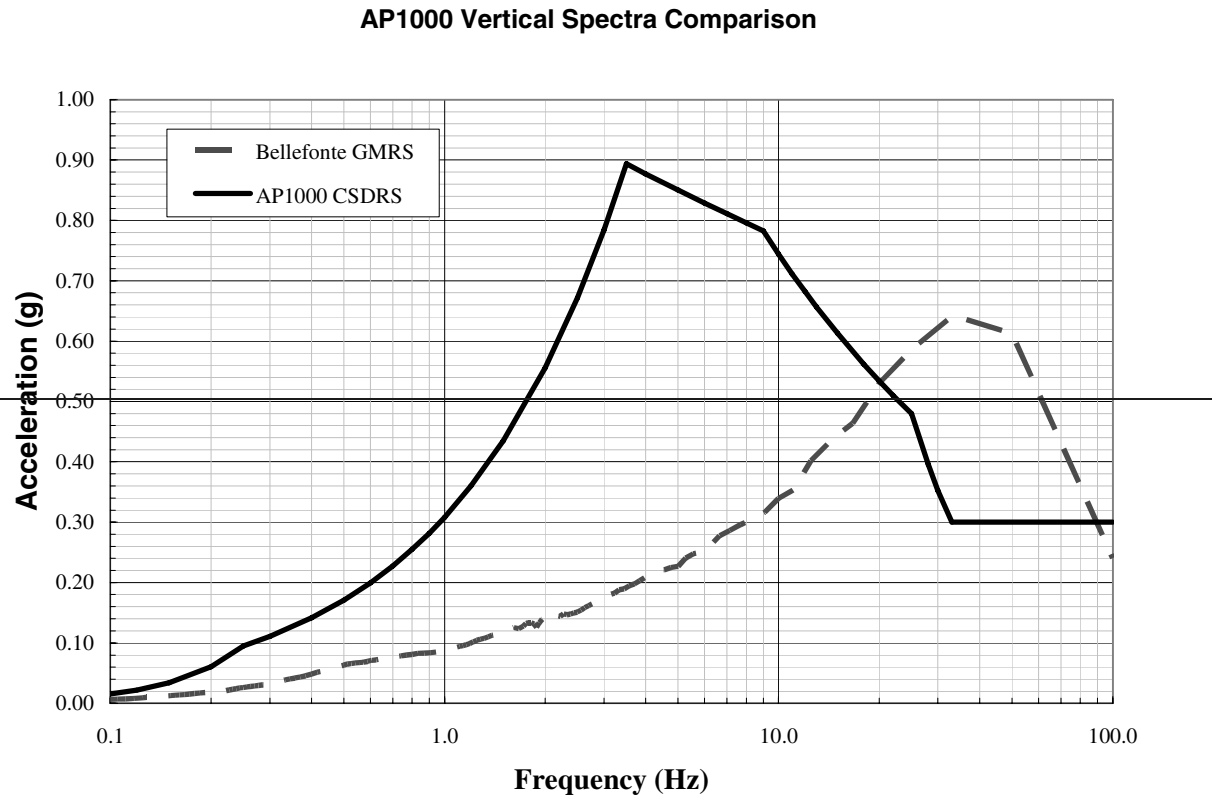
AP1000 Vertical Spectra Comparison
Bellefonte GMRS
AP1000 CSDRS
Acceleration (g)
1.00
0.90
0.80
0.70
0.60
0.50
0.40
0.30
0.20
0.10
0.00
0.1
1.0
10.0
100.0
Frequency (Hz)

NRC 163

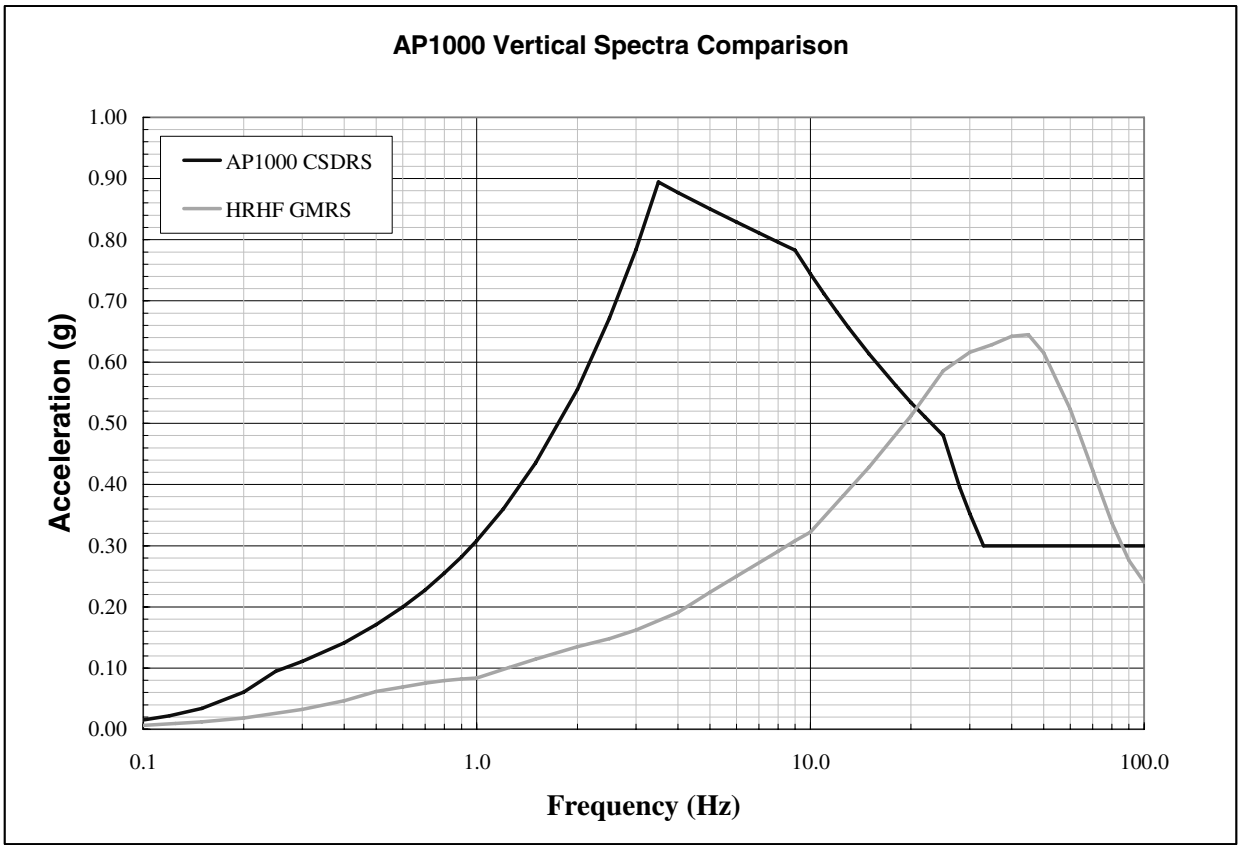

Figure 3I.1-2

Comparison of Vertical AP1000 CSDRS and ~~Bellefonte~~ HRHF GMRS

Chapter 4

NRC 103

- The control rod drive mechanisms are hydrotested after manufacture at a minimum of 125~~150~~ percent of system design pressure.

- For the initial fuel cycle, the fuel rod temperature coefficient is calculated to be negative for power operating conditions.

- For the initial fuel cycle, the moderator temperature coefficient is calculated to be negative for power operating conditions.

4.1.2 Combined License Information

This section contains no requirement for additional information to be provided in support of Combined License.

4.1.3 References

1. Letter from N. J. Liparulo (Westinghouse) to J. E. Lyons (NRC), "Transmittal of Response to NRC Request for Information on Wolf Creek Fuel Design Modifications," NSD-NRC-97-5189, June 30, 1997.

2. Letter from N. J. Liparulo (Westinghouse) to R. C. Jones (NRC), "Transmittal of Presentation Material for NRC/Westinghouse Fuel Design Change Meeting on April 15, 1996," NSD-NRC-96-4964, April 22, 1996.

3. Letter from Westinghouse to NRC, "Fuel Criteria Evaluation Process Notification for the 17x17 Robust Fuel Assembly with IFM Grid Design," NSD-NRC-98-5796, October 13, 1998.

4. Letter from H. A. Sepp (Westinghouse) to T. E. Collins (NRC), "Notification of FCEP Application for WRB-1 and WRB-2 Applicability to the 17x17 Modified LPD Grid Design for Robust Fuel Assembly Application," NSD-NRC-98-5618, March 25, 1998.

5. Letter from H. A. Sepp (Westinghouse) to T. E. Collins (NRC), "Fuel Criteria Evaluation Process Notification for the Revised Guide Thimble Dashpot Design for the 17x17 XL Robust Fuel Assembly Design," NSD-NRC-98-5722, June 23, 1998.

6. Davidson, S. L., and Kramer, W. R., (Ed.), "Reference Core Report Vantage 5 Fuel Assembly," WCAP-10444-P-A (Proprietary), September 1985 and WCAP-10445-A (Non-Proprietary), December 1983.

7. Davidson, S. L., (Ed.), "VANTAGE 5H Fuel Assembly," Addendum 2-A, WCAP-10444-P-A (Proprietary) and WCAP-10445-NP-A (Non-Proprietary), February 1989.

8. Davidson, S. L., and Nuhfer, D. L., (Ed.), "VANTAGE+ Fuel Assembly Reference Core Report," WCAP-12610-P-A (Proprietary) and WCAP-14342-A (Non-Proprietary), April 1995.

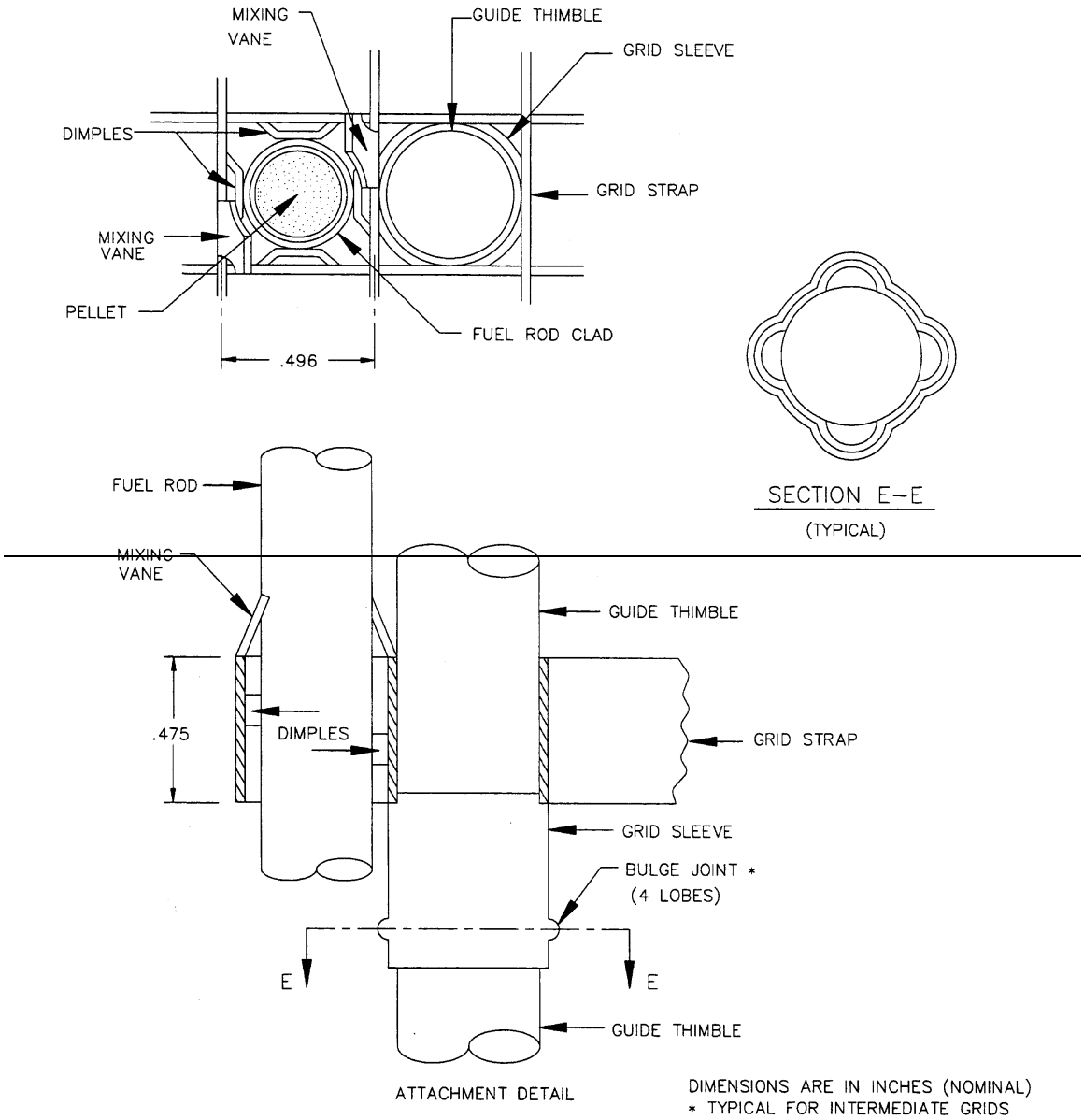
MIXING VANE
GUIDE THIMBLE
GRID SLEEVE
DIMPLES
GRID STRAP
MIXING VANE
PELLET
FUEL ROD CLAD
.496
SECTION E–E
(TYPICAL)
FUEL ROD
MIXING VANE
GUIDE THIMBLE
.475
DIMPLES
GRID STRAP
GRID SLEEVE
BULGE JOINT *
(4 LOBES)
E
E
GUIDE THIMBLE
ATTACHMENT DETAIL
DIMENSIONS ARE IN INCHES (NOMINAL)
* TYPICAL FOR INTERMEDIATE GRIDS

NRC 165

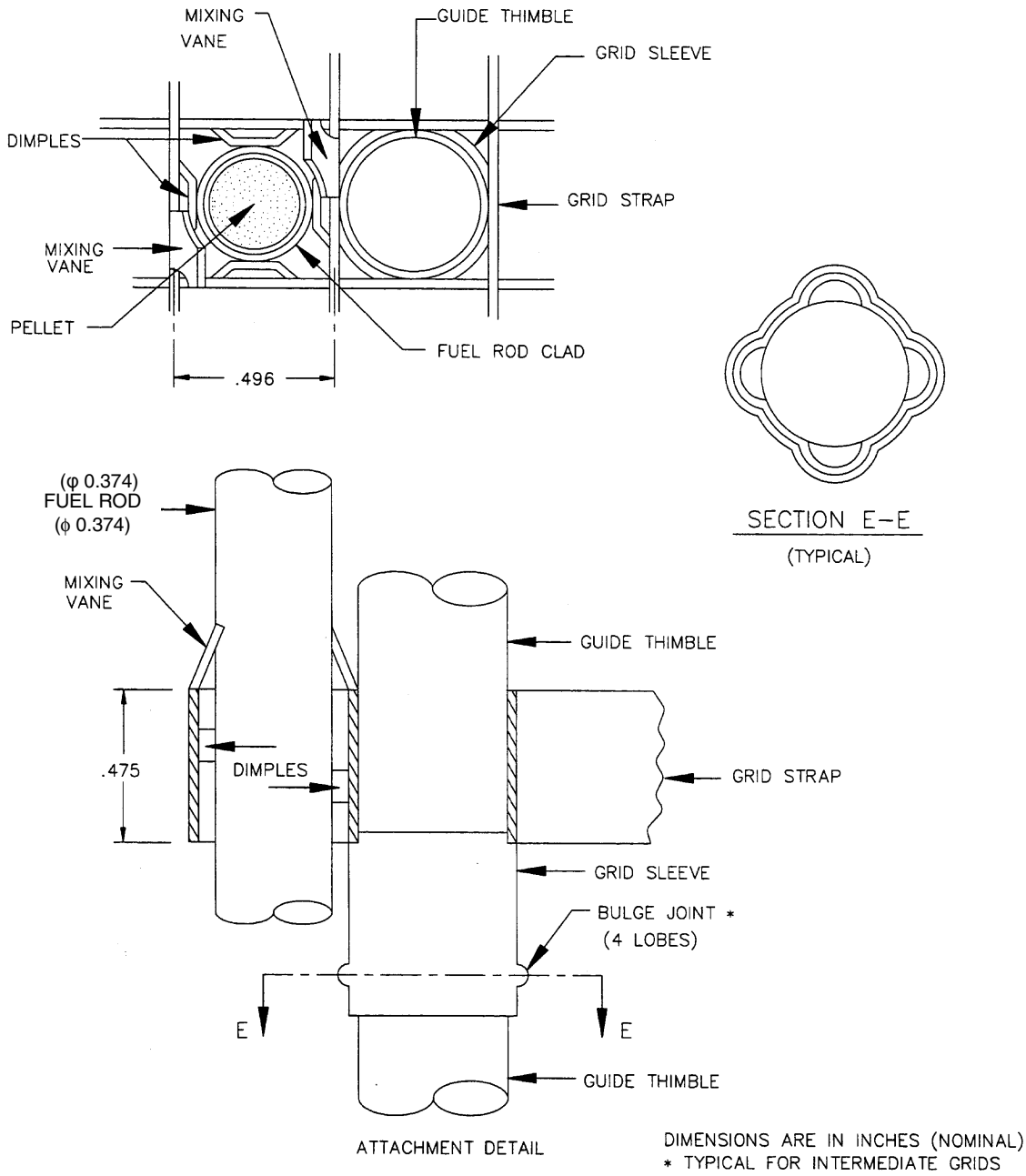

Figure 4.2-6

Intermediate Flow Mixer Grid to Thimble Attachment

NRC 160

independently modulated by the rod control system to maintain a nearly constant axial offset throughout the operating power range. The degree of control rod insertion under MSHIM operation allows rapid return to power without the need to change boron concentration.

The target axial offset used during MSHIM load follow operation is roughly the base load operation target axial offset less 10 percent. The negative bias is necessary to allow both positive and negative axial offset control effectiveness by the AO control bank. Extended base load operation is performed by controlling axial offset to the equilibrium target with the first moving M bank nearly fully withdrawn (at bite position) and AO bank fully withdrawn. The "bite" position is defined as the minimum control rod bank position required to provide a differential rod worth of at least 2 pcm/step.

NRC 160

~~Anticipated MSHIM load follow operation operates with two gray banks fully inserted to provide enough reactivity worth to compensate for transient reactivity effects without the need for soluble boron changes. The degree of control rod insertion under MSHIM operation allows rapid return to power without the need to change boron concentration.~~ Gray rod operation is a Condition 1 event which includes the periodic exchange of gray rod banks.

4.3.2.4.17 Burnup

Control of the excess reactivity for burnup is accomplished using soluble boron and/or burnable absorbers. The boron concentration is limited during operating conditions to maintain the moderator temperature coefficient within its specified limits. A sufficient burnable absorber loading is installed at the beginning of a cycle to give the desired cycle lifetime, without exceeding the boron concentration limit. The end of a fuel cycle is reached when the soluble boron concentration approaches the practical minimum boron concentration in the range of 0 to 10 ppm.

4.3.2.4.18 Rapid Power Reduction System

The reactor power control system is designed with the capability of responding to full load rejection without initiating a reactor trip using the normal rod control system, reactor control system, and the rapid power reduction system. Load rejections requiring greater than a fifty percent reduction of rated thermal power initiate the rapid power reduction system. The rapid power reduction system utilizes preselected control rod groups and/or banks which are intentionally tripped to rapidly reduce reactor power into a range where the rod control and reactor control systems are sufficient to maintain stable plant operation. The consequences of accidental or inappropriate actuation of the rapid power reduction system is included in the cycle specific safety analysis and licensing process.

4.3.2.5 Control Rod Patterns and Reactivity Worth

The rod cluster control assemblies are designated by function as the control groups and the shutdown groups. The terms group and bank are used synonymously to describe a particular grouping of control assemblies. The rod cluster control assembly patterns are displayed in Figure 4.3-27. The control banks are labeled MA, MB, MC, MD, M1, M2, and AO with the MA, MB, MC, and MD banks comprised of gray rod control assemblies; and the shutdown banks are labeled SD1, SD2, SD3, and SD4. Each bank of more than four rod cluster control assemblies,

- The array is either infinite in lateral extent or is surrounded by a conservatively chosen reflector, whichever is appropriate for the design.

- Mechanical uncertainties are treated either by using worst-case conditions or by performing sensitivity studies and obtaining appropriate uncertainties.

- Credit is taken for the neutron absorption in structural materials and in solid materials added specifically for neutron absorption.

The design method which determines the criticality safety of fuel assemblies outside the reactor uses the SCALE 4.4a system (Reference 21), which includes the BONAMI and NITAWL-II codes for cross sections generation and the KENO-V.a code for reactivity determination.

The 238 group library obtained from ENDF/B-V data is the origin of the 44 group library used in these analyses and in the modeling of the critical experiments, which are the basis for the qualification of the SCALE/KENO-V.a (Reference 26) calculation system.

A set of 30 critical experiments has been analyzed using the above method to demonstrate its applicability to criticality analysis and to establish the method bias and uncertainty. The benchmark experiments cover a wide range of geometries, materials, and enrichments, all of them adequate for qualifying methods to analyze light water reactor lattices (References 22 to 25, and 27).

The analysis of the 30 critical experiments results in an average K_{eff} of 0.9969. Comparison with the measured values results in a method bias of 0.0031. The standard deviation of the set of reactivities is 0.00285. The 95/95 tolerance factor is 2.22.

NRC 104

$$\left[(ks)^2_{method} + (ks)^2_{KENO} + \sum_i (ks)^2_{mech}\right]^{1/2}$$

The analytical methods employed herein conform with ANSI N18.2 (Reference 3), Section 5.7, Fuel Handling System; ANSI N16.9 (Reference 29), NRC Standard Review Plan, subsection 9.1.2, the NRC guidance, "OT Position for Review and Acceptance of Spent Fuel Storage and Handling Applications" (Reference 30).

4.3.2.6.2 Soluble Boron Credit Methodology

The methodology used in this analysis for soluble boron credit is analogous to that of Reference 62, and it uses analysis criteria consistent with those cited in the Safety Evaluation by the Office of Nuclear Reactor Regulation (Reference 63). Reference 62 was reviewed and approved by the NRC. The methodology used in this analysis and in Reference 62 uses axially distributed burnups to represent discharged fuel assemblies.

4.4.2.11.4 Surface Heat Transfer Coefficients

The fuel rod surface heat transfer coefficients during subcooled forced convection and nucleate boiling are presented in subsection 4.4.2.7.1.

4.4.2.11.5 Fuel Clad Temperatures

The outer surface of the fuel rod at the hotspot operates at a temperature a few degrees above fluid temperature for steady-state operation at rated power throughout core life due to the onset of nucleate boiling. At beginning of life this temperature is the same as the clad metal outer surface.

During operation over the life of the core, the buildup of oxides and crud on the fuel rod surface causes the clad surface temperature to increase. Allowance is made in the fuel center melt evaluation for this temperature rise. Since the thermal-hydraulic design basis limits DNB, adequate heat transfer is provided between the fuel clad and the reactor coolant so that the core thermal output is not limited by considerations of clad temperature.

4.4.2.11.6 Treatment of Peaking Factors

The total heat flux hot channel factor, F_Q, is defined by the ratio of the maximum-to-core-average heat flux. The design value of F_Q, as presented in Table 4.3-2 and described in subsection 4.3.2.2.6, is 2.6 for normal operation.

NRC 167

NRC 167

As described in subsection 4.3.2.2.6, the peak linear power resulting from overpower transients/operator errors (assuming a maximum overpower of 118 percent) is less than or equal 22.45 kW/ft. The centerline fuel temperature must be below the uranium dioxide melt temperature over the lifetime of the rod, including allowances for uncertainties. The fuel temperature design basis is described in subsection 4.4.1.2 and results in a maximum allowable calculated center-line temperature of 4700°F. The peak linear power for prevention of center-line melt is greater than 22.5 kW/ft. The center-line temperature at the peak linear power resulting from overpower transients/operator errors (assuming a maximum overpower of 118 percent) is below that required to produce melting.

4.4.3 Description of the Thermal and Hydraulic Design of the Reactor Coolant System

4.4.3.1 Plant Configuration Data

Plant configuration data for the thermal-hydraulic and fluid systems external to the core are provided as appropriate in Chapters 5, 6, and 9. Areas of interest are as follows:

- Total coolant flow rates for the reactor coolant system and each loop are provided in Table 5.1-3. Flow rates employed in the evaluation of the core are presented throughout Section 4.4.

- Total reactor coolant system volume including pressurizer and surge line and reactor coolant system liquid volume, including pressurizer water at steady-state power conditions, are given in Table 5.1-2.

- Comparing the impact event with the times and type of normally occurring plant operation events received from plant control system such as a control rod stepping.

- Comparing the number of events detected within a given time interval.

The sensors of the impact monitoring system are fastened mechanically to the reactor coolant system at potential loose part collection regions including the upper and lower head region of the reactor pressure vessel, and the reactor coolant inlet region of each steam generator.

The equipment inside the containment is designed to remain functional through an earthquake of a magnitude equal to 50 percent of the calculated safe shutdown earthquake and normal environments (radiation, vibration, temperature, humidity) anticipated during the operating lifetime. The instrument channels associated with the sensors at each reactor coolant system location are physically separated from each other starting at the sensor locations to a point in the plant that is always accessible for maintenance during full-power operation.

The digital metal impact monitoring system is calibrated prior to plant startup. Capabilities exist for subsequent periodic online channel checks and channel functional tests and for offline channel calibrations at refueling outages.

4.4.7 Combined License Information

NRC 102

4.4.7.1 The Combined License information requested in Section 4.4.7.1 has been totally addressed in APP-GW-GLR-059 (WCAP-16652-NP, Rev. 0 – Reference 87). No additional work is required by the Combined License applicant to address the Combined License information requested in this subsection.

The following words represent the original License information item commitment, which has been addressed as discussed above:

> Combined License applicants referencing the AP1000 certified design will address changes to the reference design of the fuel, burnable absorber rods, rod cluster control assemblies, or initial core design from that presented in the DCD.

NRC 102

4.4.7.2 Following selection of the actual plant operating instrumentation and calculation of the instrumentation uncertainties of the operating plant parameters as discussed in subsection 7.1.6, and prior to fuel load, the Combined License holder~~applicants~~ will calculate the design limit DNBR values. The calculations will be completed using the RTDP with these instrumentation uncertainties and confirm that either the design limit DNBR values as described in Section 4.4, "Thermal and Hydraulic Design," remain valid, or that the safety analysis minimum DNBR bounds the new design limit DNBR values plus DNBR penalties, such as rod bow penalty.

4.4.8 References

1. ANSI N18.2a-75, "Nuclear Safety Criteria for the Design of Stationary Pressurized Water Reactor Plants."

Table 4.4-1 (Sheet 2 of 2)

THERMAL AND HYDRAULIC COMPARISON TABLE (AP1000, AP600 AND A TYPICAL WESTINGHOUSE XL PLANT)

Design Parameters	AP1000[a]	AP600	Typical XL Plant
Heat transfer			
Active heat transfer surface area (ft^2)[f]	56,700	44,884	69,700
Average heat flux (BTU/hr-ft^2)	199,300	143,000	181,200
Maximum heat flux for normal operation (BTU/hr-ft^2)[g]	518,200	372,226	498,200
NRC 166 Average linear power (kW/ft)[f]-[m]	5.72	4.11	5.20
Peak linear power for normal operation (kW/ft)[g,h]	14.9	10.7	14.0
Peak linear power resulting from overpower transients/operator errors, assuming a maximum overpower of 118% (kW/ft)[h]	≤22.45	22.5	≤22.45
Peak Linear power for prevention of center-line melt (kW/ft)[i]	22.5	22.5	22.45
Power density (kW/l of core)[j]	109.7	78.82	98.8
Specific power (kW/kg uranium)[j]	40.2	28.89	36.6
Fuel central temperature			
Peak at peak linear power for prevention of centerline melt (°F)	4700	4,700	4700
Pressure drop[k]			
Across core (psi)	39.9 ± 4.0[l]	17.5 ± 1.7	38.8 ± 3.9
Across vessel, including nozzle (psi)	62.3 ± 6.2[l]	45.3 ± 4.5	59.7 ± 6.0

Notes:

(a) Robust Fuel Assembly.
(b) 1.25 applies to Core and Axial Offset limits; 1.22 and 1.21 apply to all other RTDP transients.
(c) WRB-2M is used for AP1000. WRB-2 or W-3 is used for AP1000 where WRB-2M is not applicable. See subsection 4.4.2.2.1 for use of W-3, WRB-2 and WRB-2M correlations.
(d) Based on vessel average temperature equal to 573.6°F. Flow rates and temperatures based on 10 percent steam generator tube plugging.
(e) Based on thermal design flow and 5.9 percent bypass flow.
(f) Based on densified active fuel length. The value for AP1000 is rounded to 5.72 kW/ft.
(g) Based on 2.60 F_Q peaking factor.
(h) See subsection 4.3.2.2.6.
(i) See subsection 4.4.2.11.6.
(j) Based on cold dimensions and 95.5 percent of theoretical density fuel for AP1000; 95 percent for others.
(k) These are typical values based on best-estimate reactor flow rate as discussed in Section 5.1.
(l) Inlet temperature = 536.8°F.
NRC 166 (m) The value for AP1000 is rounded to 5.72 kW/ft.

Chapter 5

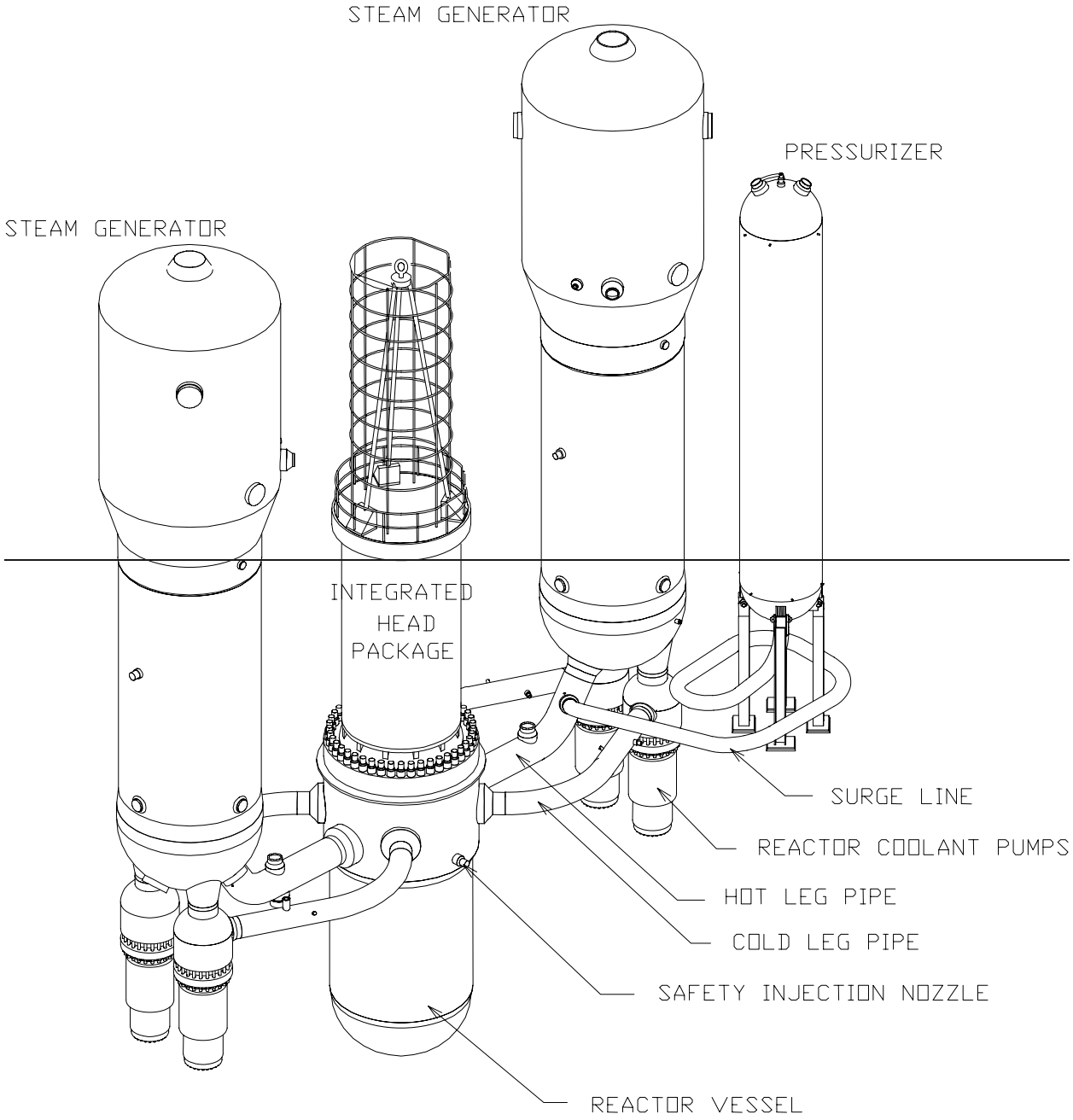
STEAM GENERATOR
PRESSURIZER
STEAM GENERATOR
INTEGRATED
HEAD
PACKAGE
SURGE LINE
REACTOR COOLANT PUMPS
HOT LEG PIPE
COLD LEG PIPE
SAFETY INJECTION NOZZLE
REACTOR VESSEL

NRC 106

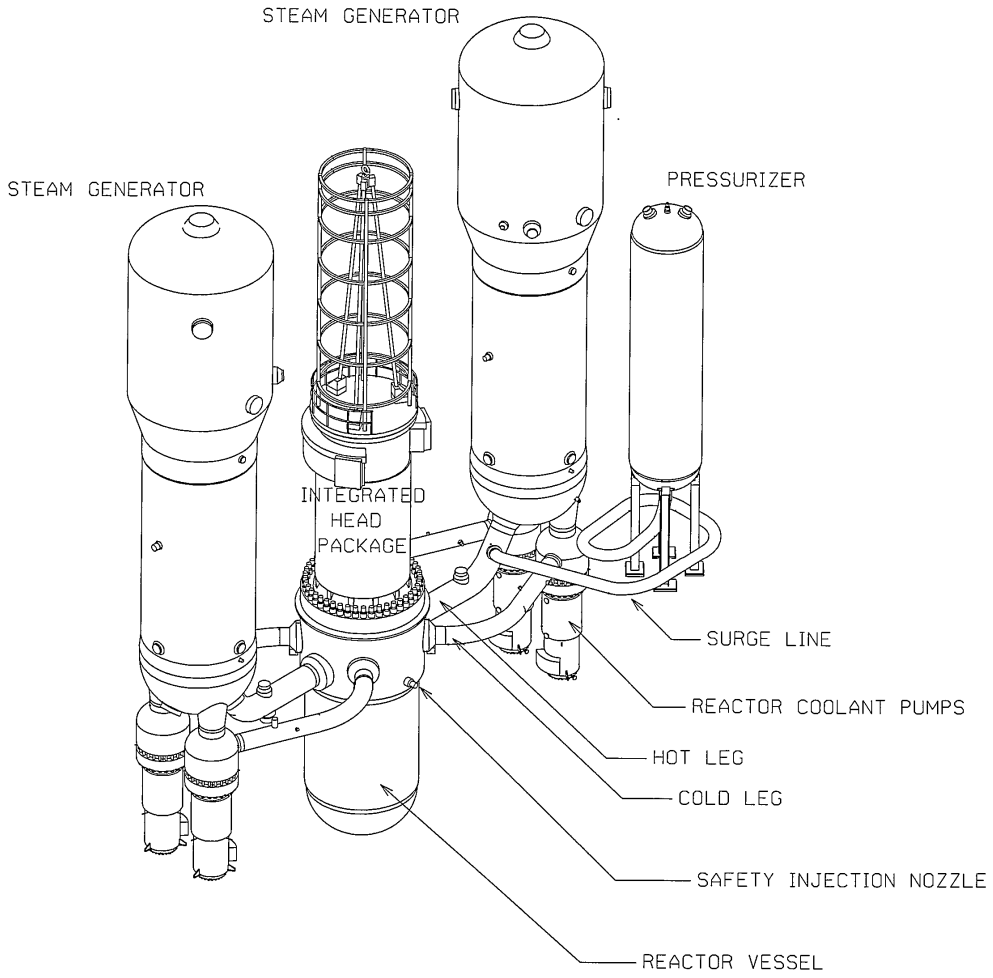

Figure 5.1-2

Reactor Coolant Loops – Isometric View

5.2.1.3 Alternate Classification

The Code of Federal Regulations, Section 10 CFR 50.55a requires the reactor coolant pressure boundary be class A (ASME Boiler and Pressure Vessel Code Section III, Class 1). Components which are connected to the reactor coolant pressure boundary that can be isolated from the reactor coolant system by two valves in series (both closed, both open, or one closed and the other open) with automatic actuation to close can be classified as class C (ASME Section III, class 3) according to 50.55a. NRC 115

A portion of the chemical and volume control system inside containment is not classified as safety-related. The classification of the AP1000 reactor coolant pressure boundary deviates from the requirement that the reactor coolant pressure boundary be classified as safety related and be constructed using the ASME Code, Section III as provided in 10 CFR 50.55a. The safety-related classification of the AP1000 reactor coolant pressure boundary ends at the third isolation valve between the reactor coolant system and the chemical and volume control system. The nonsafety-related portion of the chemical and volume control system inside containment provides purification of the reactor coolant and includes heat exchangers, demineralizers, filters and connecting piping. For a description of the chemical and volume control system, refer to subsection 9.3.6. The portion of the chemical and volume control system between the inside and outside containment isolation valves is classified as Class B and is constructed using the ASME Code, Section III.

The nonsafety-related portion of the chemical and volume control system is designed using ANSI B31.1 and ASME Code, Section VIII for the construction of the piping, valves, and components. The nonsafety-related portion of the CVS inside containment is analyzed seismically. The methods and criteria used for the seismic analysis are similar to those used of seismic Category II pipe and are defined in the subsection 5.2.1.1. The chemical and volume control system components are located inside the containment which is a seismic Category I structure.

The alternate classification of the nonsafety-related purification subsystems satisfies the purpose of 10 CFR 50.55a that structures, systems, and components of nuclear power plants which are important to safety be designed, fabricated, erected, and tested to quality standards that reflect the importance of the safety functions to be performed.

The AP1000 chemical and volume control system is not required to perform safety-related functions such as emergency boration or reactor coolant makeup. Safety-related core makeup tanks are capable of providing sufficient reactor coolant makeup for shutdown and cooldown without makeup supplied by the chemical and volume control system. Safe shutdown of the reactor does not require use of the chemical and volume control system makeup. AP1000 safe shutdown is discussed in Section 7.4.

The isolation valves between the reactor coolant system and the chemical and volume control system are active safety-related valves that are designed, qualified, inspected and tested for the isolation requirements. The isolation valves between the reactor coolant system and chemical and volume control system are designed and qualified for design conditions that include closing against blowdown flow with full system differential pressure. These valves are qualified for

5.2.2.8 Process Instrumentation

Each pressurizer safety valve discharge line incorporates a main control room temperature indicator and alarm to notify the operator of steam discharge due to either leakage or actual valve operation.

5.2.2.9 System Reliability

NRC 148
NRC 061

ASME Code safety valves and relief valves have demonstrated a high degree of reliability over many years of service. The in-service inspection and testing required of safety valves and relief valves (S~~s~~ubsections 3.9.6 and 5.2.4~~4.8~~ and Section 6.6) provides assurance of continued reliability and conformance to setpoints. The assessment of reliability, availability, and maintainability which is done to evaluate the estimated availability for the AP1000 includes estimates for the contribution of safety valves and relief valves to unavailability. These estimates were based on experience for operating units.

5.2.2.10 Testing and Inspection

Subsections 3.9.6 and 5.4.8 and Section 6.6 discuss the preservice and in-service testing and inspection required for the safety valves and relief valves. The testing and inspection requirements are in conformance with industry standards, including Section XI of the ASME Code.

5.2.3 Reactor Coolant Pressure Boundary Materials

5.2.3.1 Materials Specifications

Table 5.2-1 lists material specifications used for the principal pressure-retaining applications in Class 1 primary components and reactor coolant system piping. Material specifications with grades, classes or types are included for the reactor vessel components, steam generator components, reactor coolant pump, pressurizer, core makeup tank, and the passive residual heat removal heat exchanger. Table 5.2-1 lists the application of nickel-chromium-iron alloys in the reactor coolant pressure boundary. The use of nickel-chromium-iron alloy in the reactor coolant pressure boundary is limited to Alloy 690, or its associated weld metals Alloys 52 and 152. Steam generator tubes use Alloy 690 in the thermally treated form. Nickel-chromium-iron alloys are used where corrosion resistance of the alloy is an important consideration and where the use of nickel-chromium-iron alloy is the choice because of the coefficient of thermal expansion. Subsection 5.4.3 defines reactor coolant piping. See subsection 4.5.2 for material specifications used for the core support structures and reactor internals. See appropriate sections for internals of other components. Engineered safeguards features materials are included in subsection 6.1.1. The nonsafety-related portion of the chemical and volume control system inside containment in contact with reactor coolant is constructed of or clad with corrosion resistant material such as Type 304 or Type 316 stainless steel or material with equivalent corrosion resistance. The materials are compatible with the reactor coolant. The nonsafety-related portion of the chemical and volume control system is not required to conform to the process requirements outlined below.

Table 5.2-1 material specifications are the materials used in the AP1000 reactor coolant pressure boundary. The materials used in the reactor coolant pressure boundary conform to the applicable

raw material and controlling the hardness during fabrication by process control of bending, cold forming, straightening or other similar operation. Grinding of material in contact with reactor coolant is controlled by procedures. Ground surfaces are finished with successively finer grit sizes to remove the bulk of cold worked material.

5.2.3.5 Threaded Fastener Lubricants

The lubricants to be used on threaded fasteners which maintain pressure boundary integrity in the reactor coolant and related systems and in the steam, feed, and condensate systems; threaded fasteners used inside those systems; and threaded fasteners used in component structural support for those systems are specified in the design specification. Field selection of thread lubricants is not permitted. The thread lubricants are selected based on experience and test data which show them to be effective, but not to cause or accelerate corrosion of the fastener. Where leak sealants are used on threaded fasteners or can be in contact with the fastener in service, their selection is based on satisfactory experience or test data. Selection considers possible adverse interaction between sealants and lubricants. Lubricants containing molybdenum sulphide are prohibited.

5.2.4 Inservice Inspection and Testing of Class 1 Components

Preservice and inservice inspection and testing of ASME Code Class 1 pressure-retaining components (including vessels, piping, pumps, valves, bolting, and supports) within the reactor coolant pressure boundary are performed in accordance with Section XI of the ASME Code including addenda according to 10 CFR 50.55a(g). This includes all ASME Code Section XI mandatory appendices.

The specific edition and addenda of the Code used to determine the requirements for the inspection and testing plan for the initial and subsequent inspection intervals is to be delineated in the inspection program. The Code includes requirements for system pressure tests and functional tests for active components. The requirements for system pressure tests are defined in Section XI, IWA-5000 and IWB-5000. These tests verify the pressure boundary integrity in conjunction with inservice inspection. Section 6.6 discusses Classes 2 and 3 component examinations. NRC 148

Subsection 3.9.6 discusses the in-service functional testing of valves for operational readiness. Since none of the pumps in the AP1000 are required to perform an active safety function, the operational readiness test program for pumps is controlled administratively.

In conformance with ASME Code and NRC requirements, the preparation of inspection and testing programs is discussed in subsection 5.2.6. A preservice inspection program (nondestructive examination) ~~and a preservice test program for valves~~ for the AP1000 will be developed and submitted to the NRC. The in-service inspection program ~~and in-service test program~~ will be submitted to the NRC as discussed in subsection 5.2.6. These programs will comply with applicable in-service inspection provisions of 10 CFR 50.55a(b)(2). NRC 148

The preservice program~~s~~ provides details of areas subject to examination, as well as the method and extent of preservice examinations. The ~~I~~in-service program~~s~~ details the areas subject to examination and the method, extent, and frequency of examinations. Additionally, component supports and ~~snubber testing~~ examination requirements are included in the inspection programs. NRC 148 NRC 148

modules before construction provides the accessibility for inspection and maintenance. Relief from Section XI requirements should not be required for Class 1 pressure retaining components in the AP1000. Future unanticipated changes in the ASME Code, Section XI requirements could, however, necessitate relief requests. Relief from the inspection requirements of ASME Code, Section XI will be requested when full compliance is not practical according to the requirements of 10 CFR 50.55a(g)(5)(iv). In such cases, specific information will be provided which identifies the applicable Code requirements, justification for the relief request, and the inspection method to be used as an alternative.

Space is provided to handle and store insulation, structural members, shielding, and other materials related to the inspection. Suitable hoists and other handling equipment, lighting, and sources of power for inspection equipment are installed. The integrated head package provides for access to inspect the reactor vessel head and the weld of the control rod drive mechanisms to the reactor vessel head. Closure studs, nuts, and washers are removed to a dry location for direct inspection.

5.2.4.3 Examination Techniques and Procedures

The visual, surface, and volumetric examination techniques and procedures agree with the requirements of Subarticle IWA-2200 and Table IWB-2500-1 of the ASME Code, Section XI. Qualification of the ultrasonic inspection equipment, personnel and procedures is in compliance with Appendix VII of the ASME Code, Section XI. The liquid penetrant method or the magnetic particle method is used for surface examinations. Radiography, ultrasonic, or eddy current techniques (manual or remote) are used for volumetric examinations.

The reactor vessel is designed so that the reactor pressure vessel (RPV) inspections can be performed primarily from the vessel internal surfaces. These inspections can be done remotely using existing inspection tool designs to minimize occupational radiation exposure and to facilitate the inspections. Access is also available for the application of inspection techniques from the outside of the complete reactor pressure vessel. Reactor pressure vessel welds are examined to meet the requirements of ~~Regulatory Guide 1.150 as defined in subsection 1.9.1~~Appendix VIII of ASME Code, Section XI, which has been incorporated into the guidance of Regulatory Guide 1.150, as defined in subsection 1.9.1. NRC 148 NRC 115

5.2.4.4 Inspection Intervals

Inspection intervals are established as defined in Subarticles IWA-2400 and IWB-2400 of the ASME Code, Section XI. The interval may be extended by as much as one year so that inspections are concurrent with plant outages. It is intended that in-service examinations be performed during normal plant outages such as refueling shutdowns or maintenance shutdowns occurring during the inspection interval.

5.2.4.5 Examination Categories and Requirements

The examination categories and requirements are established according to Subarticle IWB-2500 and Table IWB-2500-1 of the ASME Code, Section XI. Class 1 piping supports will be examined in accordance with ASME Section XI, IWF-2500. NRC 148

The preservice examinations comply with IWB-2200.

5.2.4.6 Evaluation of Examination Results

Examination results are evaluated according to IWA-3000 and IWB-3000, with flaw indications according to IWB-3400 and Table IWA~~B~~-3410-1. Repair procedures, if required, are according to IWA~~B~~-4000 of the ASME Code, Section XI.

NRC 148

5.2.4.7 System Leakage and Hydrostatic Pressure Tests

System pressure tests comply with IWA-5000 and IWB-5000 of the ASME Code, Section XI. These system pressure tests are included in the design transients defined in Subsection 3.9.1. This subsection discusses the transients included in the evaluation of fatigue of Class 1 components due to cyclic loads.

5.2.5 Detection of Leakage Through Reactor Coolant Pressure Boundary

The reactor coolant pressure boundary (RCPB) leakage detection monitoring provides a means of detecting and to the extent practical, identifying the source and quantifying the reactor coolant leakage. The detection monitors perform the detection and monitoring function in conformance with the requirements of General Design Criteria 2 and 30 and the recommendations of Regulatory Guide 1.45. Leakage detection monitoring is also maintained in support of the use of leak-before-break criteria for high-energy pipe in containment. See subsection 3.6.3 for the application of leak-before-break criteria.

Leakage detection monitoring is accomplished using instrumentation and other components of several systems. Diverse measurement methods including level, flow, and radioactivity measurements are used for leak detection. The equipment classification for each of the systems and components used for leak detection is generally determined by the requirements and functions of the system in which it is located. There is no requirement that leak detection and monitoring components be safety-related. See Figure 5.2-1 for the leak detection approach. The descriptions of the instrumentation and components used for leak detection and monitoring include information on the system.

To satisfy position 1 of Regulatory Guide 1.45, reactor coolant pressure boundary leakage is classified as either identified or unidentified leakage. Identified leakage includes:

- Leakage from closed systems such as reactor vessel seal or valve leaks that are captured and conducted to a collecting tank

- Leakage into auxiliary systems and secondary systems (intersystem leakage) (This leakage is considered to be part of the 10 gpm limit identified leakage in the bases of the technical specification 3.4.8. This additional leakage must be considered in the evaluation of the reactor coolant inventory balance.)

Other leakage is unidentified leakage.

5.2.6 Combined License Information Items

5.2.6.1 ASME Code and Addenda

The Combined License applicant will address in its application the portions of later ASME Code editions and addenda to be used to construct components that will require NRC staff review and approval. The Combined License applicant will address consistency of the design with the construction practices (including inspection and examination methods) of the later ASME Code edition and addenda added as part of the Combined License application. The Combined License applicant will address the addition of ASME code cases approved subsequent to design certification.

5.2.6.2 Plant-Specific Inspection Program

The Combined License applicant will provide a plant-specific preservice inspection and inservice inspection program. The program will address reference to the edition and addenda of the ASME Code Section XI used for selecting components subject to examination, a description of the components exempt from examination by the applicable code, and drawings or other descriptive information used for the examination.

The preservice inspection program will include examinations of the reactor vessel closure head equivalent to those outlined in subsection 5.3.4.7.

The inservice inspection program will address the susceptibility calculations, inspection categorization, inspections of the reactor vessel closure head, and associated reports and notifications as defined in First Revised NRC Order EA-03-009, “Interim Inspection Requirements for Reactor Vessel Heads at PWRs” or NRC requirements that may supercede the Order. NRC 089

The COL applicant will identify any areas of inspection required by First Revised Order EA-03-009, or required by subsequent NRC requirements that may supercede the Order, that the applicant will be unable to perform or choose to perform an alternate. The applicant will submit to the NRC for review and approval a description of the proposed inspections to be performed, a description of any differences from the applicable NRC requirements, and an assessment of the acceptability of the inspection the applicant proposes to perform to address NRC requirements. NRC 089

The inservice inspection program will also include provisions to ensure that boric acid corrosion does not degrade the reactor coolant pressure boundary.

5.2.7 References

1. Burnett, T. W. T., et al., "LOFTRAN Code Description," WCAP-7907-P-A (Proprietary), and WCAP-7907-A (Nonproprietary), April 1984.

2. EPRI PWR Safety and Relief Valve Test Program, Safety and Relief Valve Test Report, Interim Report, April 1982.

Table 5.2-1 (Sheet 2 of 5)

REACTOR COOLANT PRESSURE BOUNDARY MATERIALS SPECIFICATIONS

Component	Material	Class, Grade, or Type
Vent pipe	SB-166 SB-167 or SA-312[1] SA-376	N06690 N06690 TP304, TP304L, TP304LN, TP316, TP316L, TP316LN TP304, TP304LN, TP316, TP316LN
Steam Generator Components		
Pressure plates	SA-533	Type B, CL 1 or CL 2
Pressure forgings (including nozzles and tube sheet)	SA-508	CL 1A or GR 3, CL 2
Nozzle safe ends	SA-182 SA-336 or SB-564	F316, F316L, F316LN F316LN N06690
Channel heads	SA-508	GR 3, CL 2
Tubes	SB-163	N06690
Manway studs/ Nuts	SA-193 SA-194	GR B7 GR 7~~2H~~
Pressurizer Components		
Pressure plates	SA-533	Type B, CL 1
Pressure forgings	SA-508	GR 3, CL 2
Nozzle safe ends	SA-182 SA-338 or SB-163	F316, F316L, F316LN F316, F316L, F316LN N06690
Manway studs/ Nuts	SA-193 SA-194	GR B7 GR 7~~2H~~

NRC 077

NRC 077

NRC 077

NRC 077

NRC 077

Table 5.2-1 (Sheet 3 of 5)

REACTOR COOLANT PRESSURE BOUNDARY MATERIALS SPECIFICATIONS

Component	Material	Class, Grade, or Type
Reactor Coolant Pump		
Pressure forgings	SA-182 SA-508 or SA-336	F304, F304L, F304LN, F316, F316L, F316LN GR1 F304, F304L, F304LN, F316, F316L, F316LN
Pressure casting	SA-351	CF3A or CF8A
Tube and pipe	SA-213 SA-376 or SA-312(1)	TP304, TP304L, TP304LN, TP316, TP316L, TP316LN TP304, TP304LN, TP316, TP316LN TP304, TP304L, TP304LN, TP316, TP316L, TP316LN
Pressure plates	SA-240	304, 304L, 304LN, 316, 316L, 316LN
Closure bolting	SA-193 or SA-540	GR B7 or GR B24, CL 2 & CL 4, or GR B23, CL2, CL 3 & 4
Reactor Coolant Piping		
Reactor coolant pipe	SA-376 SA-182(2)	TP304, TP304LN, TP316, TP316LN F304, F304L, F304LN, F316, F316L, F316LN
Reactor coolant fittings, branch nozzles	SA-376 SA-182	TP304, TP304LN, TP316, TP316LN F304, F304L, 304LN, F316, F316L, F316LN
Surge line	SA-376 or SA-312(1)	TP304, TP304LN, TP316, TP316LN TP304, TP304L, TP304LN, TP316, TP316L, TP316LN

NRC 077

NRC 077

Table 5.2-3

ASME CODE CASES

Code Case Number	Title
N-4-11	Special Type 403 Modified Forgings or Bars, Section III, Division 1, Class 1 and Class CS
N-20-4	SB-163 Nickel-Chromium-Iron Tubing (Alloys 600 and 690) and Nickel-Iron-Chromium Alloy 800 at a Specified Minimum Yield Strength of 40.0 ksi and Cold Worked Alloy 800 at Yield Strength of 47.0 ksi, Section III, Division 1, Class 1
N-60-5	Material for Core Support Structures, Section III, Division 1[(a)]
N-71-18	Additional Material for Subsection NF, Class 1, 2, 3 and MC Component Supports Fabricated by Welding, Section III Division 1
[*N-122-2*	*Stress Indices for integral Structural Attachments Section III, Division 1, Class 1*]*
N-249-14	Additional Materials for Subsection NF, Class 1, 2, 3, and MC Supports Fabricated Without Welding, Section III, Division 1[(b)]
[*N-284-1*	*Metal Containment Shell Buckling Design Methods, Section III, Division 1 Class MC*]*
[*N-318-5*	*Procedure for Evaluation of the Design of Rectangular Cross Section Attachments on Class 2 or 3 Piping Section III, Division*]*
[*N-319-3*	*Alternate Procedure for Evaluation of Stresses in Butt Welding Elbows in Class 1 Piping Section III, Division 1*]*
[*N-391-2*	*Procedure for Evaluation of the Design of Hollow Circular Cross Section Welded Attachments on Class 1 Piping Section III, Division 1*]*
[*N-392-3*	*Procedure for Valuation of the Design of Hollow Circular Cross Section Welded Attachments on Class 2 and 3 Piping Section III, Division 1*[(c)]]*
N-474-2	Design Stress Intensities and Yield Strength Values for UNS06690 With a Minimum Yield Strength of 35 ksi, Class 1 Components, Section III, Division 1
2142-1	F-Number Grouping for Ni-Cr-Fe, Classification UNS N06052 Filler Metal, Section IX
2143-1	F-Number Grouping for Ni-Cr-Fe, Classification UNS W86152 Welding Electrode, Section IX
NRC 093 N-655	Use of SA-738, Grade B, for Metal Containment Vessels, Class MC, Section 11, Division 1

Notes:

(a) Use of this code case will meet the conditions for Code Case N-60-4 in Reg. Guide 1.85 Revision 30.
(b) Use of this code case will meet the conditions for Code Case N-249-10 in Reg. Guide 1.85 Revision 30.
(c) Use of this code case will meet the conditions for Code Case N-392-1 in Reg. Guide 1.84 Revision 30.

*NRC Staff approval is required prior to implementing a change in this information; see DCD Introduction Section 3.5.

- The closure head is stored on a stand on the reactor operating deck during refueling to facilitate direct visual inspection.

- Reactor vessel studs, nuts, and washers can be removed to dry storage during refueling.

- Access is provided to the reactor vessel nozzle safe ends. The insulation covering the nozzle-to-pipe welds may be removed.

Because radiation levels and remote underwater accessibility limits access to the reactor vessel, several steps have been incorporated into the design and manufacturing procedures in preparation for the periodic nondestructive tests which are required by the ASME Code inservice inspection requirements. These are as follows:

- Shop ultrasonic examinations are performed on internally clad surfaces to an acceptance and repair standard to provide an adequate cladding bond to allow later ultrasonic testing of the base metal from the inside surface. The size of cladding bond defect allowed is 0.25 inch by 0.75 inch with the greater direction parallel to the weld in the region bounded by 2T (T = wall thickness) on both sides of each full-penetration pressure boundary weld. Unbounded areas exceeding 0.442 square inches (0.75-inch diameter) in other regions are rejected.

- The design of the reactor vessel shell is an uncluttered cylindrical surface to permit future positioning of the test equipment without obstruction.

- The weld-deposited clad surface on both sides of the welds to be inspected is specifically prepared to ensure meaningful ultrasonic examinations.

- During fabrication, full-penetration ferritic pressure boundary welds are ultrasonically examined in addition to code examinations.

- After the shop hydrostatic testing, full-penetration ferritic pressure boundary welds (with the exception of the closure head welds), as well as the nozzles to safe end welds, are ultrasonically examined from both the inside and outside diameters in addition to ASME Code, Section III requirements.

- Preservice examinations for the closure head will include a baseline top-of-the head visual examination; ultrasonic examinations of the inside diameter surface of each vessel head penetration; eddy current examinations of the surface of head penetration welds, the outside diameter surface of the vessel penetrations, and the inside diameter surface of the penetrations; and post-hydro liquid penetrant examinations of accessible surfaces that have undergone preservice inspection eddy current examinations.

NRC 090
NRC 148

The vessel design and construction enables inspection in accordance with the ASME Code, Section XI. ~~The reactor vessel inservice inspection program is detailed in the technical specifications.~~

5.3.6.5 Reactor Vessel Insulation

NRC 136

The ~~Combined License applicant will address verification that the~~ reactor vessel insulation design was verified to be~~is~~ consistent with the design bases established for in-vessel retention. The ULPU Configuration V test data is suitable to be used and was used to develop the design loads for the AP1000 reactor vessel insulation design. See Reference 8 for details.

5.3.7 References

1. ASTM E-185-82, "Standard Practice for Conducting Surveillance Tests for Light-Water Cooled Nuclear Power Reactor Vessels."

2. Regulatory Guide 1.190, "Calculational and Dosimetry Methods for Determining Pressure Vessel Neutron Fluence," United States Nuclear Regulatory Commission, Office of Nuclear Reactor Research, March, 2001.

3. WCAP-15557, "Qualification of the Westinghouse Pressure Vessel Neutron Fluence Evaluation Methodology," S. L. Anderson, August 2000.

4. NRC Policy Issue, "Pressurized Thermal Shock," SECY-82-465, November 23, 1982.

5. Theofanous, T.G., et al., "Limits of Coolability in the AP1000-Related ULPU-2400 Configuration V Facility," CRSS-03/06, June 2003.

6. WCAP-14040-NP-A, Revision 2, "Methodology Used to Develop Cold Overpressure Mitigating System Setpoints and RCS Heatup and Cooldown Limit Curves," J. D. Andrachek, et al., January 1996.

7. APP-GW-GLR-023, "Surveillance Capsule Lead Factor and Azimuthal Location Confirmation," Westinghouse Electric Company LLC.

8. APP-GW-GLR-060, "Reactor Vessel Insulation System – Verification of In-Vessel Retention Design Bases," Westinghouse Electric Company LLC.

NRC 115

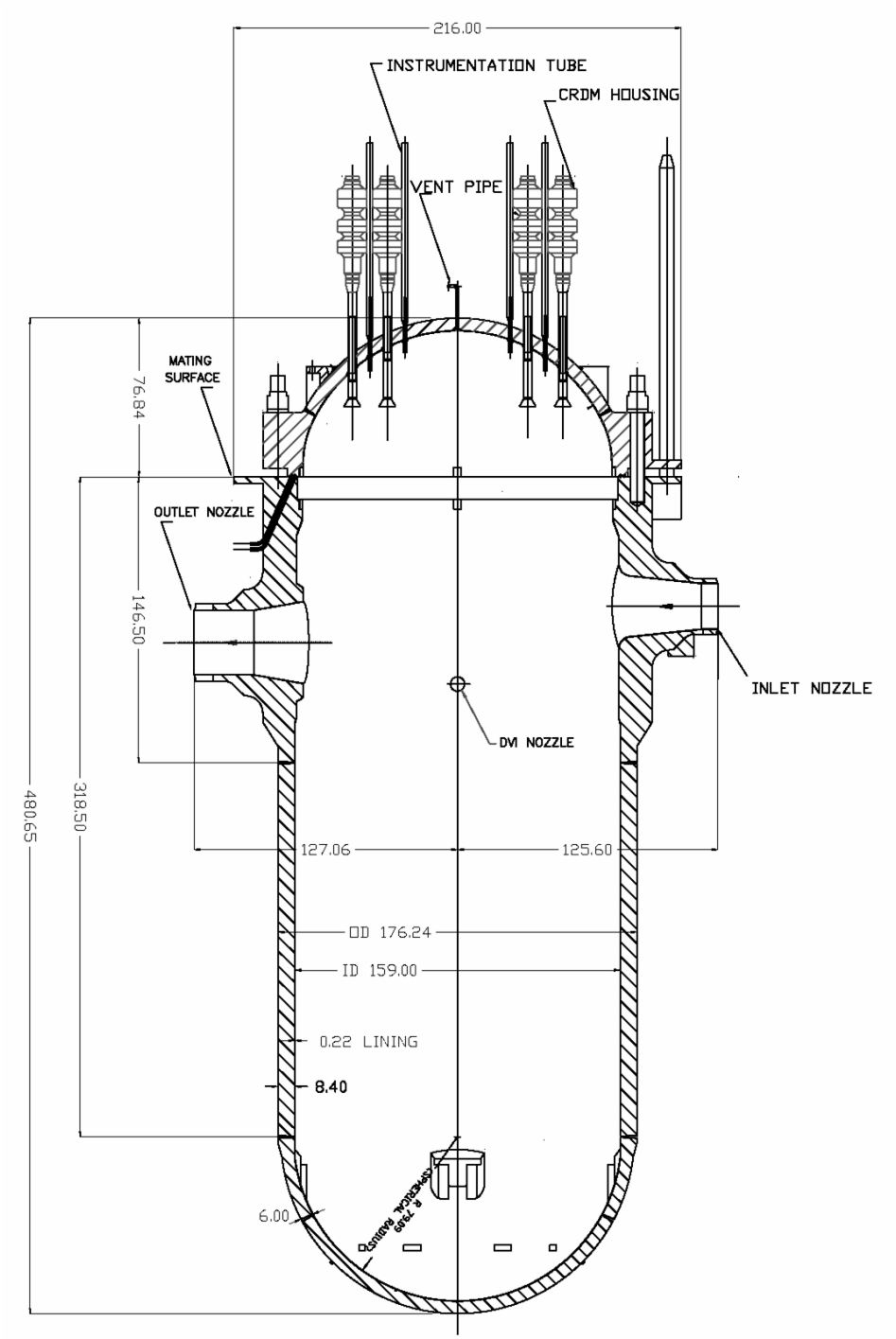

Figure 5.3-6

Reactor Vessel Key Dimensions, Side View

5.4.2.2 Design Description

The AP1000 steam generator is a vertical-shell U-tube evaporator with integral moisture separating equipment. Figure 5.4-2 shows the steam generator, indicating several of its design features.

The design of the Model Delta-125 steam generator, except for the configuration of the channel head, is similar to an upgraded Model Delta-75 steam generator. The Delta-75 steam generator has been placed in operation as a replacement steam generator.

Steam generator design features are described in the following paragraphs.

On the primary side, the reactor coolant flow enters the primary chamber via the hot leg nozzle. The lower portion of the primary chamber is elliptical and merges into a cylindrical portion, which mates to the tubesheet. This arrangement provides enhanced access to all tubes, including those at the periphery of the bundle, with robotics equipment. This feature enhances the ability to inspect, replace and repair portions of the AP1000 unit compared to the more spherical primary chamber of earlier designs. The head is divided into inlet and outlet chambers by a vertical divider plate extending from the apex of the head to the tubesheet.

The reactor coolant flow enters the inverted U-tubes, transferring heat to the secondary side during its traverse, and returns to the cold leg side of the primary chamber. The flow exits the steam generator via two cold leg nozzles to which the reactor coolant pumps are directly attached. A high-integrity, nickel-chromium-iron (Alloy 690) weld is made to the nickel-chromium-iron alloy buttered ends of these nozzles.

A passive residual heat removal (PRHR) nozzle attaches to the bottom of the channel head of the loop 1 steam generator on the cold leg portion of the head. This nozzle provides recirculated flow from the passive residual heat removal heat exchanger to cool the primary side under emergency conditions. A separate nozzle on one of the steam generator channel heads is connected to a line from the chemical and volume control system. The nozzle provides for purification flow and makeup flow from the chemical and volume control system to the reactor coolant system.

The AP1000 steam generator channel head has provisions to drain the head. To minimize deposits of radioactive corrosion products on the channel head surfaces and to enhance the decontamination of these surfaces, the channel head cladding is machined or electropolished for a smooth surface. The primary manways provide enhanced primary chamber access compared to previous model steam generators.

Should steam generator replacement using a channel head cut be required, the arrangement of the AP1000 steam generator channel head facilitates steam generator replacement in two ways. It is completely unobstructed around its circumference for mounting cutting equipment. And is long enough to permit post-weld heat treatment with minimal effect of tubesheet acting as a heat sink.

The tubes are fabricated of nickel-chromium-iron Alloy 690. The tubes undergo thermal treatment following tube-forming operations. The tubes are tack-expanded, welded, and expanded over the full depth of the tubesheet. Full depth expansion was selected because of its capability to minimize secondary water access to the tube-to-tube-sheet crevice. The method by which the tubes

NRC 053

NRC 053

are expanded into the tubesheet is determined based on consideration of the residual stresses and the resultant susceptibility of the tube to degradation. Residual stresses ~~smaller than from other expansion methods result from this process and are minimized by~~ (and the expanded tube's susceptibility to degradation) are limited, in part, through tight control of the pre-expansion clearance between the tube and tubesheet hole.

Support of the tubes is provided by ferritic stainless steel tube support plates. The holes in the tube support plates are broached with a hole geometry to promote flow along the tube and to provide an appropriate interface between the tube support plate and the tube. Figure 5.4-3 shows the support plate hole geometry. Anti-vibration bars installed in the U-bend portion of the tube bundle minimize the potential for excessive vibration.

Steam is generated on the shell side, flows upward, and exits through the outlet nozzle at the top of the vessel. Feedwater enters the steam generator at an elevation above the top of the U-tubes through a feedwater nozzle. The feedwater enters a feedring via a welded thermal sleeve connection and leaves it through nozzles attached to the top of the feedring. The nozzles are fabricated of an alloy that is very resistant to erosion and corrosion with the expected secondary water chemistry and flow rate through the nozzles. After exiting the nozzles, the feedwater flow mixes with saturated water removed by the moisture separators. The flow then enters the downcomer annulus between the wrapper and the shell.

Fluid instabilities and water hammer phenomena are important considerations in the design of steam generators. Water level instabilities can occur from density wave instabilities which could affect steam generator performance. Density wave instability is avoided in the AP1000 steam generator by including appropriate pressure losses in the downcomer and the risers that lead to negative damping factors.

Steam generator bubble collapse water hammer has occurred in certain early pressurized water reactor steam generator designs having feedrings equipped with bottom discharge holes. Prevention and mitigation of feedline-related water hammer has been accomplished through an improved design and operation of the feedwater delivery system. The AP1000 steam generator and feedwater system incorporate features designed to eliminate the conditions linked to the occurrence of steam generator water hammer. The steam generator features include introducing feedwater into the steam generator at an elevation above the top of the tube bundle and below the normal water level by a top discharge feedring. The top discharge of the feedring helps to reduce the potential for vapor formation in the feedring. This minimizes the potential for conditions that can result in water hammer in the feedwater piping. The feedwater system features (subsection 10.4.7 discusses in more detail) designed to prevent and mitigate water hammer include a short, horizontal or downward sloping feedwater pipe at steam generator inlet.

These features minimize the potential for trapping pockets of steam which could lead to water hammer events.

Stratification and striping are reduced by an upturning elbow inside the steam generator which raises the feedring relative to the feedwater nozzle. The elevated feedring reduces the potential for stratified flow by allowing the cooler, more dense feedwater to fill the nozzle/elbow arrangement before rising into the feedring.

In certain design basis events described in Chapter 15, the pressurizer safety valves are predicted to operate with very low flow rates. For these events, the reactor coolant system pressure is slowly increasing as a result of the mismatch between the decay heat removal rate from the passive residual heat removal heat exchanger and the core decay heat. This slow pressurization of the reactor coolant system results in a small amount of steam flow through the safety valves. Under these conditions, the safety valves do not fully open and would not experience significant cycling. Operation of the safety valves under these conditions could result in small leakage from the valve (much less than the capacity of the normal makeup system), but does not impair the valve overpressure protection capability.

The relief valve on the normal residual heat removal system has an accumulation of 10 percent of the set pressure. The set pressure is the lower of the pressure based on the design pressure of the residual heat removal system and the pressure based on the reactor vessel low temperature pressure limit. The pressure limit determined based on the design pressure includes the effect of the pressure rise across the pump. The set pressure in Table 5.4-17 is based on the reactor vessel low temperature pressure limit. The lowest permissible set pressure is based on the required net positive suction head for the reactor coolant pump.

5.4.9.4 Tests and Inspections

The safety and relief valves are the subject of a variety of tests to validate the design and to verify pressure boundary and functional integrity. For valves that are required to function during a Service Level D condition, static deflection tests are performed to demonstrate operability. Section 3.10 describes these tests.

Safety valves similar to those connected to the pressurizer have been tested within the Electric Power Research Institute (EPRI) safety and relief valve test program. Capacity data for the specific AP1000 safety valve size has been correlated with the EPRI test data to demonstrate that the valve is adequate for steam flow and water flow, even though water flow is not anticipated through the pressurizer safety valves. The completion of this program addresses the requirements of 10 CFR 50.34(f)(2)(x) as related to reactor coolant system relief and safety valve testing. The normal residual heat removal system relief valve is designed for water relief and is not a reactor coolant system pressure relief device since it has a set pressure less than reactor coolant system design pressure. Therefore, the valve selected for the normal residual heat removal system relief valve is independent from the Electric Power Research Institute safety and relief valve test program.

Reactor coolant system pressure relief devices are subjected to preservice and inservice hydrostatic tests, seat leakage tests, operational tests, and inspections, as required. The preservice and inservice inspection and testing programs for valves are described in subsections 3.9.6 and 5.2.4~~5.4.8~~ and Section 6.6. The test program for the safety valves complies with the requirements of ANSI/ASME OM, Part 1.

NRC 063
NRC 148

The pressure boundary portion of the valves are required to be inservice inspected according to the rules of Section XI of the ASME Code. There are no full-penetration welds within the valve body walls. Valves are accessible for disassembly and internal visual inspection.

Chapter 6

TABLE OF CONTENTS (Cont.)

Section	Title	Page
6.5.3	Fission Product Control Systems	6.5-5
6.5.3.1	Primary Containment	6.5-5
6.5.3.2	Secondary Containment	6.5-6
6.5.4	Combined License Information	6.5-6
6.5.5	References	6.5-6
NRC 148 6.6	Inservice Inspection of Class 2, ~~and~~ 3, and MC Components	6.6-1
6.6.1	Components Subject to Examination	6.6-1
6.6.2	Accessibility	6.6-1
6.6.3	Examination Techniques and Procedures	6.6-2
6.6.4	Inspection Intervals	6.6-2
6.6.5	Examination Categories and Requirements	6.6-3
6.6.6	Evaluation of Examination Results	6.6-3
6.6.7	System Pressure Tests	6.6-3
6.6.8	Augmented Inservice Inspection to Protect against Postulated Piping Failures	6.6-3
6.6.9	Combined License Information Items	6.6-3
6.6.9.1	Inspection Programs	6.6-3
6.6.9.2	Construction Activities	6.6-4
APPENDIX 6A	FISSION PRODUCT DISTRIBUTION IN THE AP1000 POST-DESIGN BASIS ACCIDENT CONTAINMENT ATMOSPHERE	6A-1
6A.1	Design Basis Sequence Assumptions	6A-1
6A.1.1	Break Size and Fission Product Release Location in Containment	6A-2
6A.1.1.1	Releases From Depressurization System Lines	6A-2
6A.1.1.2	Releases From Coolant Loop Breaks	6A-3
6A.1.1.3	Direct Vessel Injection Line Breaks	6A-3
6A.1.1.4	Core Makeup Tank Balance Line Breaks	6A-3
6A.1.1.5	Chemical and Volume Control System Line Breaks	6A-3
6A.1.1.6	Fission Product Release Location Conclusion	6A-4
6A.2	Containment Natural Circulation and Mixing	6A-4
6A.3	Insights From the Passive Containment Cooling System Large Scale Test and AP1000 Stratification Studies	6A-7
6A.4	Conclusions	6A-8
6A.5	References	6A-9

6.1.1.3 Specifications for Nonpressure-Retaining Materials

Materials for nonpressure-retaining portions of engineered safety features in contact with borated water or other fluids may be procured under ASTM designation. The principle examples of these items are the in-containment refueling water storage tank liner and the passive containment cooling system storage tank liner.

NRC 174

The walls of the in-containment refueling water storage tank are~~may be~~ fabricated of ASTM/ASME A240/SA-240~~Designation 532101~~. This is a chromium, manganese ~~molybdenum~~, and nitrogen-strengthened duplex~~austenitic~~ stainless steel with higher ultimate tensile and yield strengths than type 304 and 316 stainless steel. This material can be welded using a matching Duplex 2101 (2304 or 2209) filler metal by any of the commonly used stainless steel welding methods, including shielded metal arc welding (SMAW), gas tungsten arc welding TIG (GTAW), gas metal arc welding MIG (GMAW), flux-cored arc welding (FCW), plasma arc welding (PAW), submerged arc welding (SAW).~~either the shielded metal arc welding or gas tungsten arc welding methods.~~ This material is used for applications where the higher strength allows reductions in weight and material costs. The material has a resistance to intergranular stress corrosion cracking similar to or better than type 304 and 304L stainless steel.

NRC 174

6.1.1.4 Material Compatibility with Reactor Coolant System Coolant and Engineered Safety Features Fluids

Engineered safety features components materials are manufactured primarily of stainless steel or other corrosion-resistant material. Protective coatings are applied on carbon steel structures and equipment located inside the containment, as discussed in subsection 6.1.2.

Austenitic stainless steel plate conforms to ASME SA-240. Austenitic stainless steel is confined to those areas or components which are not subject to post-weld heat treatment. Carbon steel forgings conform to ASME SA-350. Austenitic stainless steel forgings conform to ASME SA-182. Nickel-chromium-iron alloy pipe conforms to ASME SB-167. Carbon steel castings conform to ASME SA-352. Austenitic stainless steel castings conform to ASME SA-351.

Hardfacing material in contact with reactor coolant is a qualified low- or zero-cobalt alloy, equivalent to Stellite-6. The use of cobalt-base alloys is minimized. Low- or zero-cobalt alloys used for hardfacing or other applications where cobalt-base alloys have been previously used are qualified by wear and corrosion tests. The corrosion tests qualify the corrosion resistance of the alloy in reactor coolant. Cobalt-free, wear-resistant alloys considered for this application include those developed and qualified in nuclear industry programs.

In post-accident situations where the containment is flooded with water containing boric acid, pH adjustment is provided by the release of trisodium phosphate into the water. The trisodium phosphate is held in baskets located in the floodable volume that includes the steam generator compartments and contains the reactor coolant loop. The addition of trisodium phosphate to the solution is sufficient to raise the pH of the fluid to above 7.0. This pH is consistent with the guidance of NRC Branch Technical Position MTEB-6.1 for the protection of austenitic stainless steel from chloride-induced stress corrosion cracking. Section 6.3 describes the design of the trisodium phosphate baskets.

NRC 088

assumed to occur between the 107-foot elevation and the 163~~171~~-foot elevation of the pressurizer compartment or the 118-foot to 135-foot elevations of the pressurizer spray valve room.

The analysis for the steam generator vertical access area is performed assuming a double-ended guillotine break in a 3-inch inside diameter reactor coolant system cold-leg pipe. This break envelopes the branch lines that could be postulated to rupture in this area. The break is assumed to occur between the 83-foot elevation and the 103-foot elevation of the steam generator vertical access area compartment.

The analysis for the maintenance floor and operating deck compartments are performed assuming a one square foot rupture of a main steam line pipe. This break envelopes the branch lines that could be postulated to rupture in these areas. The break is assumed to occur between the 107-foot elevation and the 135-foot elevation of the maintenance floor compartment and between the 135-foot elevation and the 282-foot elevation of the operating deck region.

The analysis for the main chemical and volume control system room is performed assuming a single-ended guillotine break in a 3-inch diameter reactor coolant system cold-leg pipe. This break envelopes the branch lines that could be postulated to rupture in this area. The break is assumed to occur between the 91-foot elevation and the 105-foot elevation of the chemical and volume control system room compartment.

The analysis for the pipe tunnel in the chemical and volume control system room is performed assuming a double-ended guillotine break in a 4-inch diameter steam generator blowdown line. This double-ended break envelopes the branch lines that could be postulated to rupture in this area. The break is assumed to occur between the 98.5-foot elevation and the 105-foot elevation of the chemical and volume control system room pipe tunnel.

An evaluation of rooms which could have either a main or startup feedwater line break was performed. No significant pressurization of the regions is predicted to occur because the postulated breaks are located in regions which are open to the large free volume of containment. For these regions, the main or startup feedwater line breaks are not limiting.

6.2.1.2.3.3 Node Selection

The nodalization for the sub-compartments is analyzed in sufficient detail such that nodal boundaries are at the location of flow obstructions or geometrical changes within the subcompartment. These discontinuities create pressure differentials between adjoining nodes. There are no significant discontinuities within each node, and hence the pressure gradient is negligible within any node.

6.2.1.2.3.4 Vent Flowpath Flow Conditions

The flow characteristics for each of the subcompartments are such that, at no time during the transient does critical flow exist through vent paths.

6.2.1.3 Mass and Energy Release Analyses for Postulated Pipe Ruptures

Mass and Energy releases are documented in this section for two different types of transients.

closing permits isolation valve stroke testing without actuation of the passive containment cooling system.

- Verify water flow delivery and containment water coverage, consistent with the accident analysis.
- Verify visually that the path for containment cooling air flow is not obstructed by debris or foreign objects.
- NRC 148 Test frequency is consistent with the ~~plant technical specifications (subsection 16.3.6) and~~ inservice testing program (subsection 3.9.6).

6.2.2.5 Instrumentation Requirements

The status of the passive containment cooling system is displayed in the main control room. The operator is alerted to problems with the operation of the equipment within this system during both normal and post-accident conditions.

Normal operation of the passive containment cooling system is demonstrated by monitoring the recirculation pump discharge pressure, flow rate, water storage tank level and temperature, and valve room temperature. Post-accident operation of the passive containment cooling system is demonstrated by monitoring the passive containment cooling water storage tank level, passive containment cooling system cooling water flow rate, containment pressure, and external cooling air discharge temperature.

The information on the activation signal-generating equipment is found in Chapter 7.

The protection and safety monitoring system providing system actuation is discussed in Chapter 7.

6.2.3 Containment Isolation System

The major function of the containment isolation system of the AP1000 is to provide containment isolation to allow the normal or emergency passage of fluids through the containment boundary while preserving the integrity of the containment boundary, if required. This prevents or limits the escape of fission products that may result from postulated accidents. Containment isolation provisions are designed so that fluid lines which penetrate the primary containment boundary are isolated in the event of an accident. This minimizes the release of radioactivity to the environment.

The containment isolation system consists of the piping, valves, and actuators that isolate the containment. The design of the containment isolation system satisfies the requirements of NUREG 0737, as described in the following paragraphs.

Table 6.2.3-1 (Sheet 1 of 4)

CONTAINMENT MECHANICAL PENETRATIONS AND ISOLATION VALVES

	Containment Penetration			Isolation Device					Test		
System	Line	Flow	Closed Sys IRC	Valve/Hatch Identification	DCD Subsection	Position N-S-A	Signal	Closure Times	Type[1] & Note	Medium	Direction
CAS	Service air in	In	No	CAS-PL-V204 CAS-PL-V205	9.3.1	C-O-C C-O-C	None None	N/A N/A	C,5	Air	Forward
	Instrument air in	In	No	CAS-PL-V014 CAS-PL-V015	9.3.1	O-O-C O-O-C	T None	std. N/A	C,5	Air	Forward
NRC 087 NRC 150 CCS	IRC loads in	In	No	CCS-PL-V200 CCS-PL-V201	9.2.2	O-O-C O-O-C	S None	std. N/A	C,5	Air	Forward
	IRC loads out	Out	No	CCS-PL-V208 CCS-PL-V207	9.2.2	O-O-C O-O-C	~~SS~~ S	std. std.	C,5	Air	Forward
CVS	Spent resin flush out	Out	No	CVS-PL-V041 CVS-PL-V040 CVS-PL-V042	9.3.6	C-C-C C-C-C C-C-C	None None None	N/A N/A N/A	C	Air	Forward
	Letdown	Out	No	CVS-PL-V047 CVS-PL-V045	9.3.6	C-O-C C-O-C	T T	std. std.	C	Air	Forward
	Charging	In	No	CVS-PL-V090 CVS-PL-V091 CVS-PL-V100	9.3.6	C-O-C C-O-C C-C-C	HR,PL2, S+PL1, SGL HR,PL2, S+PL1, SGL None	std. std. N/A	C	Air	Forward
	H2 injection to RCS	In	No	CVS-PL-V092 CVS-PL-V094	9.3.6	O-C-C C-C-C	T None	std. N/A	C	Air	Forward
DWS	Demin. water supply	In	No	DWS-PL-V244 DWS-PL-V245	9.2.4	C-O-C C-O-C	None None	N/A N/A	C,5	Air	Forward
FHS	Fuel transfer	N/A	No	FHS-FT-01	6.2.5	C-O-C	None	N/A	B	Air	Forward
FPS	Fire protection standpipe sys.	In	No	FPS-PL-V050 FPS-PL-V052	9.5.1	C-C-C C-C-C	None None	N/A N/A	C,5	Air	Forward
PSS	RCS/PSX/CVS samples out	Out	No	PSS-PL-V011 PSS-PL-V010A,B	9.3.3	C-C-C C-C-C	T T	std. std.	C	Air	Forward
	Cont. air samples out	Out	No	PSS-PL-V046 PSS-PL-V008	9.3.3	O-C-C O-C-C	T T	std. std.	C	Air	Forward
	RCS/Cont. air sample return	In	No	PSS-PL-V023 PSS-PL-V024	9.3.3	O-C-C O-C-C	T None	std. N/A	C	Air	Forward

inadvertently closed. The technical specifications specify surveillances to show that these valves are open. These valves also receive a safeguards actuation signal to confirm that they are open in the event of an accident. As a result of the power lock out, the redundant position indication and alarms and the technical specifications the valve controls are nonsafety-related.

6.3.7.6.2.3 Passive Residual Heat Removal Heat Exchanger Inlet Motor-Operated Valve Control

The motor-operated valve in the passive residual heat removal heat exchanger inlet line is normally open during normal plant operation. Power to this valve is locked out. Redundant valve position indications and alarms are provided to alert the operator if the valve is open. This valve also receives an actuation signal to confirm that it is open in the event of an accident.

6.3.7.7 Automatic Depressurization System Actuation at 24 Hours

A timer is used to automatically actuate the automatic depressurization system if offsite and onsite power are lost for about 24 hours. This prevents discharging the Class 1E dc power sources such that they are no longer able to operate the automatic depressurization system valves. If power becomes available to the dc batteries and they are no longer discharging prior to activation of the timer, then the automatic depressurization system actuation would be delayed. If the plant does not need actuation of the automatic depressurization system based on having stable pressurizer level, full core makeup tanks, and high and stable in-containment refueling water storage tank levels, the operators are directed to de-energize all loads on the 24-hour batteries. This action will block actuation of the automatic depressurization system and allow for its actuation later should the plant conditions unexpectedly degrade.

6.3.8 Combined License Information

6.3.8.1 Containment Cleanliness Program

The Combined License applicants referencing the AP1000 will address preparation of a program to limit the amount of debris that might be left in the containment following refueling and maintenance outages. The cleanliness program will limit the storage of outage materials (such as temporary scaffolding and tools) inside containment during power operation consistent with COL item 6.3.8.2. The cleanliness program will be consistent with the containment cleanliness program used in the evaluation discussed in subsection 6.3.8.2.

6.3.8.2 Verification of Water Sources for Long-Term Recirculation Cooling Following a LOCA

The Combined License information requested in this subsection has been fully addressed in APP-GW-GLR-079 (Reference 3), and the applicable changes are incorporated into the DCD. No additional work is required by the Combined License applicant to address the aspects of the Combined License information requested in this subsection.

NRC 137

The completed evaluation documented in APP-GW-GLR-079 (Reference 3) is consistent with Regulatory Guide 1.82 Revision 3 and demonstrates that adequate long-term core cooling is available considering debris resulting from a LOCA and debris that might exist in containment prior to a LOCA.

- Pressure Relief Isolation Valve

  To limit the pressure increase within the main control room, isolation valves are provided, one in each of redundant flowpaths, which open on a time delay after receipt of an emergency habitability system actuation signal. The valves provide a leak tight seal to protect the integrity of the main control room pressure boundary during normal operation, and are normally closed to prevent interference with the operation of the nonradioactive ventilation system.

- Main Air Flowpath Isolation Valve

  The main air flowpath contains a normally open, manually operated valve located within the MCR pressure boundary, upstream of the remotely operated air delivery main isolation valves. The valve is provided as a means of isolating and preserving the air storage tank's contents in the event of a pressure regulating valve malfunction.

- Air Delivery Alternate Isolation Valve

  The alternate air delivery flowpath contains a normally closed, manually operated valve, located within the MCR pressure boundary. The valve is provided as a means of manually activating the alternate air delivery flowpath in the event the main air delivery flowpath is inoperable.

- Pressure Relief Damper

  Pressure relief dampers are located downstream of the butterfly isolation valves, and are set to open on a differential pressure of at least 1/8-inch water gauge with respect to the surrounding areas. The differential pressure between the control room and the surrounding area location is monitored to ensure that a positive pressure is maintained in the control room with respect to its surroundings.

  NRC 068 The pressure relief dampers discharge through~~into~~ the MCR vestibule in order to reduce the amount of radioactivity that can be transported into the MCR when operators enter. Two vestibule discharge openings provide a purge flow path from the vestibule to the corridor.~~, with the discharge closer to the door into the MCR to improve the vestibule purge effectiveness. Two vestibule discharge openings, approximately four inches in diameter and located near the vestibule door into the corridor, provide a purge flow path from the vestibule to the corridor.~~

- Control Room Access Doors

  Two sets of doors, with a vestibule between that acts as an airlock, are provided at the access to the main control room.

- Breathing Apparatus

NRC 148

6.6 Inservice Inspection of Class 2, ~~and~~ 3, and MC Components

6.6.1 Components Subject to Examination

Preservice and inservice inspections of Quality Group B and C pressure retaining components (ASME Code, Section III Class 2 and 3 components) such as vessels, piping, pumps, valves, bolting, and supports as identified in subsection 3.2.2 are performed in accordance with the ASME Code, Section XI, as required by 10 CFR 50.55a(g). This includes the ASME Code Section XI Mandatory Appendices. Preservice and inservice inspections of Quality Group B components that are ASME Class MC (metallic containment) pressure-retaining components and integral attachments are performed in accordance with the ASME Code, Section XI, as required by 10 CFR 50.55a. Refer to subsection 3.8.2, "Steel Containment" for design details, including accessibility of primary containment.

NRC 148

The responsibility for preparation of the pre-service inspection program (nondestructive examination) is described in subsection 6.6.9. The responsibility for the inservice inspection program that is required prior to commercial operation is described in subsection 6.6.9. These programs will address applicable inservice inspection provisions of 10 CFR 50.55a(g). The pre-service program will provide details of areas subject to inspection, as well as the method and extent of pre-service inspection. The inservice inspection program will detail the areas subject to inspection and method, extent, and frequency of inspection.

6.6.2 Accessibility

NRC 148

ASME Code Class 2, ~~and~~ 3, and MC components are designed so that access is provided in the installed condition for visual, surface and volumetric examinations specified by the ASME Code. See subsection 5.2.1.1 for a discussion of the baseline ASME Code edition and Addenda. Design provisions, in accordance with Section XI, IWA-1500, are formally implemented in the Class 2, ~~and~~ 3, and MC component design processes.

NRC 148

The goal of designing for inspectability is to provide for the inspectability access and conformance of component design with available inspection equipment and techniques. Factors such as examination requirements, examination techniques, accessibility, component geometry and material selection are used in evaluating component designs. Examination requirements and examination techniques are defined by inservice inspection personnel. Inservice inspection review as part of the design process provides component designs that conform to inspection requirements and establishes recommendations for enhanced inspections.

Considerable experience has been drawn on in designing, locating, and supporting Quality Group B and C (ASME Class 2 and 3) pressure-retaining components to permit pre-service and inservice inspection required by Section XI of the ASME Code. Factors such as examination requirements, examination techniques, accessibility, component geometry, and material selections are used in establishing the designs. The inspection design goals are to eliminate uninspectable components, reduce occupational radiation exposure, reduce inspection times, allow state-of-the-art inspection systems, and enhance detection and the reliability of flaw characterization. There are no Quality Group B and C components which require inservice inspection during reactor operation.

Removable insulation is provided on piping systems requiring volumetric and surface inspection. Removable hangers and pipe whip restraints are provided, as necessary and practical, to facilitate inservice inspection. Working platforms are provided in areas requiring inspection and servicing of pumps and valves. Temporary or permanent platforms, scaffolding, and ladders are provided to facilitate access to piping welds. The components and welds requiring inservice inspection are designed to allow for the application of the required inservice inspection methods, that is, sufficient clearances for personnel and equipment, maximized examination surface distances, two-sided access, favorable materials, weld joint simplicity, elimination of geometrical interferences, and proper weld surface preparation.

Many of the ASME Code, Section III, Class 2 and 3 components are included in modules which are fabricated offsite and shipped to the site, as described in subsection 3.9.1.5. The modules are designed and engineered to provide access for in-service inspection and maintenance activities. The attention to detail that is engineered into the modules prior to construction improves the accessibility for inspection and maintenance.

NRC 148

Relief from Section XI requirements will not be required for ASME Code, Section III, Class 2, ~~and~~ 3, and MC pressure-retaining components in the AP1000 plant for the baseline design certification code. Future unanticipated changes in the Section XI requirements could, however, necessitate relief requests. Relief from the inspection requirements of Section XI will be requested when full compliance is not practical according to the requirements of 10 CFR 50.55a. In such cases, specific information will be provided to identify the applicable ASME Code requirements, justification for the relief request, and the inspection method to be used as an alternative.

Space is provided to handle and store insulation, structural members, shielding, and other material related to the inspection. Suitable hoists and other handling equipment, lighting, and sources of power for inspection equipment are installed at appropriate locations.

6.6.3 Examination Techniques and Procedures

The visual, surface, and volumetric examination techniques and procedures are in accordance with the requirements of ASME Code, Section XI, subarticle IWA-2000. Code cases listed in Regulatory Guide 1.147 are applied as the need arises during the pre-service inspection. Code cases determined as necessary to accomplish pre-service inspection activities are used.

NRC 148

The liquid penetrant or magnetic particle methods are used for surface examinations. ~~Radiography, u~~Ultrasonic~~,~~ or eddy current methods (whether manual or remote) are used for volumetric examinations.

The report format for reportable indications and data compilation provide for comparison of data from subsequent examinations.

6.6.4 Inspection Intervals

NRC 148

Inspection intervals included in the inspection program are as defined in ~~subarticle~~ Subarticles IWA-2400, IWC-2400, IWD-2400, IWE-2400, and IWF-2400 of the ASME Code, Section XI. The periods within each inspection interval may be extended by as much as one year to permit inspections to be concurrent with plant outages. It is intended that inservice examinations be

performed during normal plant outages, such as refueling shutdown or maintenance shutdowns occurring during the inspection interval.

6.6.5 Examination Categories and Requirements

Examination categories and examination requirements (examination methods, acceptance criteria, extent of examination, and frequency of examination) for Class 2 components are in accordance with Subsection IWC and ~~t~~Table IWC-2500 of the ASME Code, Section XI. Similar information for Class 3 components are in conformance with Subsection IWD~~Article IWD-2000~~ and ~~t~~Table IWD-2500-1 for component supports examination categories and examination requirements are in conformance with Subsection IWF and Table IWF-2500-1; and for Class MC components examination categories and examination requirements are in conformance with Subsection IWE and Table IWE-2500-1 of ASME Code, Section XI.

NRC 148

The pre-service examination of Class 2 components is according to the requirements of Subarticle IWC-2200. The pre-service examination of Class MC components is in accordance with the requirements of Subarticle IWE-2200. The pre-service examination requirements for component supports is in accordance with the requirements of Subarticle IWF-2200. The pre-service examination of Class 3 components is according to the requirements of Subarticle IWD-2200~~100~~. ~~Inservice test requirements for component supports comply with ASME Code, Section XI, Article IWF-5000.~~

NRC 148

As provided in ASME Section XI, IWC-1220, IWD-1220, and IWE-1220, certain portions of Class 2, 3, and MC systems are exempt from the volumetric, surface and visual examination requirements of IWC-2500, IWD-2500, and IWE-2500. Supports associated with Class 2, 3 and MC components are also exempt in accordance with the requirements of IWF-1230.

6.6.6 Evaluation of Examination Results

Examination results are evaluated per the acceptance standards found in IWA-3000, IWC-3000, ~~and~~ IWD-3000, IWE 3000, and IWF-3000 of the ASME Code, Section XI. Repair and replacement procedures are in accordance with ASME Code, Section XI, Article IWA-4000. ~~If the guidelines of IWA-4000 are inappropriate for the components, then the guidelines of ASME Code Section XI, IWC-4000 and IWD-4000 apply.~~

NRC 092
NRC 148

6.6.7 System Pressure Tests

System pressure tests comply with IWA-5000, IWC-5000, ~~and~~ IWD-5000, and IWE-5000 of the ASME Code, Section XI, for Class 2, ~~and~~ 3, and MC components. Pressure testing of Class MC components is performed per the 10 CFR 50 Appendix J "Containment Leak Rate Testing" Program.

NRC 148

6.6.8 Augmented Inservice Inspection to Protect against Postulated Piping Failures

An augmented inspection program is developed for high-energy fluid systems piping between containment isolation valves. Such a program is also developed where no isolation valve is used inside containment between the first rigid pipe connection to the containment penetration or the

Chapter 7

Protection and Safety Monitoring System – The aggregate of electrical and mechanical equipment which senses generating station conditions and generates the signals to actuate reactor trip and ESF, and which provides the equipment necessary to monitor plant safety-related functions during and following designated events.

Protective Function – Any one of the functions necessary to mitigate the consequences of a design basis event. Protective functions are initiated by the protection and safety monitoring system logic and will be accomplished by the trip and actuation subsystems. Examples of protective functions are reactor trip and engineered safety features (such as valve alignment and containment isolation).

Actuated Equipment – The assembly of prime movers and driven equipment used to accomplish a protective function (such as solenoids, shutdown rods, and valves).

Actuation Device – A component that directly controls the motive power for actuated equipment (such as circuit breakers, relays, and pilot valves).

Division – One of the four redundant segments of the safety system. A division includes its associated sensors, field wiring, cabinets, and electronics used to generate one of the redundant actuation signals for a protective function. It also includes the power source and actuation signals.

Channel – One of the several separate and redundant measurements of a single variable used by the protection and safety monitoring system in generating the signal to initiate a protective function. A channel can lose its identity when it is combined with other inputs in a division.

Degree of Redundancy – The number of redundant channels monitoring a single variable, or the number of redundant divisions which can initiate a given protective function or accomplish a given protective function. Redundancy is used to maintain protection capability when the safety-related system is degraded by a single random failure.

System-Level Actuation – Actuation of a sufficient number of actuation devices to effect a protective function.

Component-Level Actuation – Actuation of a single actuation device (component).

7.1.1 The AP1000 Instrumentation and Control Architecture

Figure 7.1-1 illustrates the instrumentation and control architecture for the AP1000. The figure shows two major sections separated by the real-time data network. Figure 7.1-1 depicts the real-time data highway as a single network. To meet cyber security concerns, the real-time data highway will be separated into security levels as described in Reference 22.

NRC 114 The lower portion of the figure includes the plant protection, control, and monitoring functions. At the ~~left~~ right is the protection and safety monitoring system. It performs the reactor trip functions, the engineered safety features (ESF) actuation functions, and the Qualified Data Processing (QDPS) functions. The I&C equipment performing reactor trip and ESF actuation functions, their related sensors, and the reactor trip switchgear are, for the most part, four-way redundant. This redundancy permits the use of bypass logic so that a division or individual channel out of service

[*WCAP-16096-NP-A (Reference 9), NABU-DP-00014-GEN (Reference 20), and the NRC-approved Westinghouse Quality Management System (Reference 21) describe design processes that will be used for AP1000.*]*

7.1.2.14.2 Commercial Dedication

[WCAP-16097-P-A (Reference 8) provides for the use of commercial off-the-shelf hardware and software through a commercial dedication process.]* Control of the hardware and software during the operational and maintenance phase is the responsibility of the Combined License applicant as described in subsection 13.5.1. NRC 114

7.1.3 Plant Control System

The plant control system is a nonsafety-related system that provides control and coordination of the plant during startup, ascent to power, power operation, and shutdown conditions. The plant control system integrates the automatic and manual control of the reactor, reactor coolant, and various reactor support processes for required normal and off-normal conditions. The plant control system also provides control of the nonsafety-related decay heat removal systems during shutdown. The plant control system accomplishes these functions through use of the following:

- Rod control
- Pressurizer pressure and level control
- Steam generator water level control
- Steam dump (turbine bypass) control
- Rapid power reduction

The plant control system provides automatic regulation of reactor and other key system parameters in response to changes in operating limits (load changes). The plant control system acts to maximize margins to plant safety limits and maximize the plant transient performance. The plant control system also provides the capability for manual control of plant systems and equipment. Redundant control logic is used in some applications to increase single-failure tolerance.

The plant control system includes the equipment from the process sensor input circuitry through to the modulating and nonmodulating control outputs as well as the digital signals to other plant systems. Modulating control devices include valve positioners, pump speed controllers, and the control rod equipment. Nonmodulating devices include motor starters for motor-operated valves and pumps, breakers for heaters, and solenoids for actuation of air-operated valves. The plant control system cabinets contain the process sensor inputs and the modulating and nonmodulating outputs. The plant control system also includes equipment to monitor and control the control rods.

The functions of the plant control system are performed by system assemblies including:

- Distributed controllers
- Signal selector algorithms
- Operator controls and indication
- Real-time data network

*NRC Staff approval is required prior to implementing a change in this information; see DCD Introduction Section 3.5.

- Rod control system
- Rod position indication
- Rod drive motor-generator sets

NRC 112
NRC 114

~~Figure 7.1-10 provides an illustration of the plant control system.~~

7.1.3.1 Distributed Controllers

Each distributed controller processes inputs, performs system-level and component-level control calculations, provides capability for an operator interface to the controlled components, transmits control signals to discrete, modulating, and networked interfaced control components, and provides plant status and plant parameter information to the real-time data network.

The distributed controllers receive process inputs and implement the system-level logic and control algorithms appropriate for the plant operating mode. The distributed controllers receive process inputs from, and transmit process control outputs to, the actuated components. The distributed controller also transmits and receives process signals via the real-time data network. The real-time data network also provides for two-way communication between the distributed controllers and between the distributed controllers and the main control room and remote shutdown workstation.

Control functions are distributed across multiple distributed controllers so that single failures within a controller do not degrade the performance of control functions performed by other controllers. The major control functions which are implemented in different distributed controllers include reactor power control, feedwater control, pressurizer control, and turbine control.

7.1.3.2 Signal Selector Algorithms

Signal selector algorithms provide the plant control system with the ability to obtain inputs from the protection and safety monitoring system. The signal selector algorithms select those protection system signals that represent the actual status of the plant and reject erroneous signals. Therefore, the control system does not cause an unsafe control action to occur even if one of four redundant protection channels is degraded by random failure simultaneous with another of the four channels bypassed for test or maintenance.

Each signal selector algorithm receives data from each of the redundant divisions of the protection and safety monitoring system. The data is received from each division through an isolation device.

The signal selector algorithms provide validated process values to the plant control system. They also provide the validation status, the average of the valid process values, the number of valid process values, an alarm (if one process value has been rejected), and another alarm (if two process values have been rejected).

For the logic values received from the protection and safety monitoring system, such as permissives, two-out-of-four (2/4) voting is used to provide a valid logic value to the plant control system.

[9. *WCAP-16096-NP-A, Revision 01A, "Software Program Manual for Common Q Systems," January 2004.*]*

10. Deleted.

11. Deleted.

12. WCAP-15776, "Safety Criteria for the AP1000 Instrument and Control Systems," April 2002.

13. WCAP-16097-P-A (Proprietary) and WCAP-16096-NP-A (Non-Proprietary), Appendix 4, "Common Qualified Platform Integrated Solution," May 2003.

14. Deleted.

15. Deleted.

16. Deleted.

17. WCAP-16361-P (Proprietary) and WCAP-16361-NP (Non-Proprietary), "Westinghouse Setpoint Methodology for Protection Systems – AP1000," May 2006.

18. APP-GW-GLR-017, AP1000 Standard Combined License Technical Report, "Resolution of Common Q NRC Items," Westinghouse Electric Company LLC.

19. WCAP-16675-P (Proprietary) and WCAP-16675-NP (Non-Proprietary), "AP1000 Protection and Safety Monitoring System Architecture Technical Report," February 2007.

NRC 114

20. NABU~~NAMB~~-DP-00014-GEN, Rev. 1 (Proprietary), "Design Process for Common Q Safety Systems," March 2006.

21. Westinghouse Electric Company Quality Management System (QMS), Rev. 5 (Non-Proprietary), October 1, 2002.

22. APP-GW-GLR-104, "AP1000 Cyber Security Implementation," May 2007.

*NRC Staff approval is required prior to implementing a change in this information; see DCD Introduction Section 3.5.

7.2 Reactor Trip

7.2.1 Description

Considerations, such as mechanical or hydraulic limitations on equipment or heat transfer requirements on the reactor core, define a safe operating region for the plant. Maneuvering of the plant within this safe operating region is permitted in response to normal power generation demands. The plant design provides margin to the safety limits so that an unsafe condition is not caused by the transients induced by normal operating changes. The plant control system attempts to keep the reactor operating away from any safety limit. Excursions toward a limit occur because of abnormal demands, malfunctions in the control system, or by severe transients induced by occurrence of a Condition II or III event, as discussed in Chapter 15. Hypothetical events (Condition IV) are analyzed with respect to plant safety limits. The safety system keeps the reactor within the safe region by shutting down the reactor whenever safety limits are approached. Reactor trip is a protective function performed by the protection and safety monitoring system when it anticipates an approach of a parameter to its safety limit. Reactor shutdown occurs when electrical power is removed from the rod drive mechanism coils, allowing the rods to fall by gravity into the reactor core.

NRC 114 ~~The equipment involved in reactor trip is shown in simplified block diagram form in Figure 7.1-2.~~ Section 7.1 provides a description of the reactor trip equipment. The equipment involved is:

- Sensors and manual inputs
- Protection and safety monitoring system cabinets
- Reactor trip switchgear

The plant protection subsystems maintain surveillance of key process variables directly related to equipment mechanical limitations (such as pressure), and of variables which directly affect the heat transfer capability of the reactor (such as flow and temperature). Some limits, such as the overtemperature ΔT setpoint, are calculated in the protection and safety monitoring system from other parameters when direct measurement of the variable is not possible. Table 7.2-1 lists variables monitored for reactor trip.

Four redundant measurements, using four separate sensors, are made for each variable used for reactor trip. Analog signals are converted to digital form by analog-to-digital converters within the protection and safety monitoring system. Signal conditioning is applied to selected inputs following the conversion to digital form. Following necessary calculations and processing, the measurements are compared against the applicable setpoint for that variable. A partial trip signal for a parameter is generated if one channel's measurement exceeds its predetermined or calculated limit. Processing of variables for reactor trip is identical in each of the four redundant divisions of the protection system. Each division sends its partial trip status to each of the other three divisions over isolated multiplexed data links. Each division is capable of generating a reactor trip signal if two or more of the redundant channels of a single variable are in the partial trip state.

The reactor trip signal from each of the four divisions of the protection and safety monitoring system is sent to the corresponding reactor trip switchgear breakers.

NRC 111

range values. ~~It~~This trip function may be manually blocked and the high voltage source range detector power supply de-energized when the intermediate range neutron flux is above the P-6 setpoint value. It is automatically blocked by the power range neutron flux interlock (P-10). The trip may be manually reset when neutron flux is between P-6 and P-10. The reset occurs automatically when the intermediate range flux decreases below P-6. The channels can be individually bypassed to permit channel testing during plant shutdown or prior to startup. This bypass action is indicated in the main control room.

Figure 7.2-1, sheet 3 shows the logic for this trip. This sheet also shows the development of permissive P-6 while P-10 is shown in Figure 7.2-1, sheet 4.

Intermediate Range High Neutron Flux Trip

Intermediate range high neutron flux trips the reactor when two of the four intermediate range channels exceed the trip setpoint. This trip, which provides protection during reactor startup, can be manually blocked if the power range channels are above approximately 10-percent power (P-10). The trip is automatically reset when the power range channels indicate less than 10-percent power. The intermediate range channels, including detectors, are separate from the power range channels. The intermediate range channels can be individually bypassed to permit channel testing during plant shutdown or prior to startup. This bypass action is indicated in the main control room.

Figure 7.2-1, sheet 3 shows the logic for this trip. The development of permissive P-10 is shown in Figure 7.2-1, sheet 4.

Power Range High Neutron Flux Trip (Low Setpoint)

Power range high neutron flux (low setpoint) trips the reactor when two of the four power range channels exceed the trip setpoint.

The trip, which provides protection during startup, can be manually blocked when the power range channels are above approximately 10-percent power (P-10). The trip is automatically reset when the power range channels indicate less than 10-percent power.

Figure 7.2-1, sheet 3 shows the logic for this trip. The development of permissive P-10 is shown on Figure 7.2-1, sheet 4.

7.2.1.1.2 Nuclear Overpower Trips

Power Range High Neutron Flux Trip (High Setpoint)

Power range high neutron flux (high setpoint) trips the plant when two of the four power range channels exceed the trip setpoint. It provides protection against excessive core power generation during normal operation and is always active. Figure 7.2-1, sheet 4 shows the logic for this trip.

Power Range High Positive Flux Rate Reactor Trip

This trip protects the reactor when a sudden abnormal increase in power occurs in two out of the four power range channels. It provides protection against ejection accidents of low worth rods

K_4 = A preset bias

$F_2(\Delta I)$ = A function of the neutron flux difference between upper and lower ionization chamber flux signals; to correct, if necessary, for an adverse axial flux shape.

Increases in ΔI beyond a predefined deadband results in a decrease in trip setpoint.

The source of temperature and neutron flux information is identical to that of the overtemperature ΔT trip, and the resultant ΔT setpoint is compared to the same measured ΔT power signal. Figure 7.2-1, sheet 5, shows the logic for this trip function.

Reactor Trip on Low Pressurizer Pressure

This trip protects against low pressure, which could lead to departure from nucleate boiling. The parameter sensed is reactor coolant pressure as measured in the pressurizer. This trip is automatically blocked when reactor power is below the P-10 permissive setpoint to allow control rod testing during cold, depressurized conditions. The trip is automatically reset when reactor power is above the P-10 setpoint.

Figure 7.2-1, sheet 5, shows the logic for this trip. The development of the P-10 permissive is shown in Figure 7.2-1, sheet 4.

Reactor Trip on Low Reactor Coolant Flow

This trip protects against departure from nucleate boiling in the event of low reactor coolant flow. Flow in each hot leg is measured at the hot leg elbow. The trip on low flow in the hot legs is automatically blocked when reactor power is below the P-10 permissive setpoint. This enhances reliability by preventing unnecessary reactor trips. The trip function is automatically reset when reactor power is above the P-10 setpoint.

NRC 111

Figure 7.2-1, sheet 5 shows the logic for this trip. The development of permissives P-10 ~~and P-8 are~~is shown in Figure 7.2-1, sheet 4.

Reactor Trip on Reactor Coolant Pump Underspeed

This trip protects the reactor core from departure from nucleate boiling in the event of a loss of flow in more than one loop. This protection is provided by tripping the reactor when the speed on two out of the four reactor coolant pumps falls below the setpoint. Loss of flow in more than one loop could be caused by a voltage or frequency transient in the plant power supply such as would occur during a station blackout. It could be caused by inadvertent opening of more than one reactor coolant pump circuit breaker. There is one speed detector mounted on each reactor coolant pump. The trip is automatically blocked when reactor power is below the P-10 permissive setpoint to enhance reliability by preventing unnecessary reactor trips. The trip is automatically reset when reactor power is above the P-10 setpoint.

Figure 7.2-1, sheet 5, shows the logic for this trip. The development of P-10 is shown in Figure 7.2-1, sheet 4.

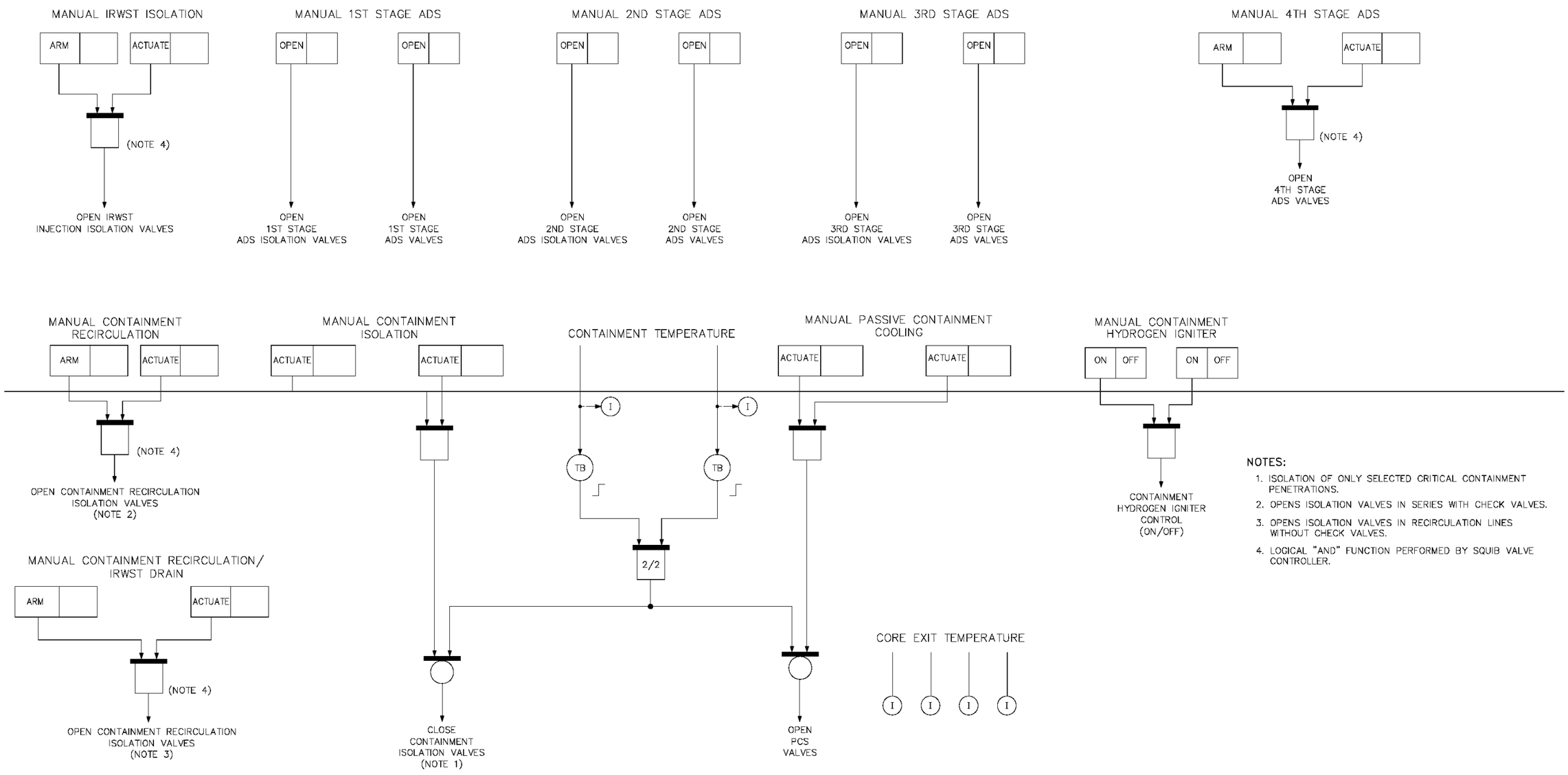
MANUAL IRWST ISOLATION
ARM
ACTUATE
(NOTE 4)
OPEN IRWST INJECTION ISOLATION VALVES
MANUAL 1ST STAGE ADS
OPEN
OPEN
OPEN 1ST STAGE ADS ISOLATION VALVES
OPEN 1ST STAGE ADS VALVES
MANUAL 2ND STAGE ADS
OPEN
OPEN
OPEN 2ND STAGE ADS ISOLATION VALVES
OPEN 2ND STAGE ADS VALVES
MANUAL 3RD STAGE ADS
OPEN
OPEN
OPEN 3RD STAGE ADS ISOLATION VALVES
OPEN 3RD STAGE ADS VALVES
MANUAL 4TH STAGE ADS
ARM
ACTUATE
(NOTE 4)
OPEN 4TH STAGE ADS VALVES
MANUAL CONTAINMENT RECIRCULATION
ARM
ACTUATE
(NOTE 4)
OPEN CONTAINMENT RECIRCULATION ISOLATION VALVES (NOTE 2)
MANUAL CONTAINMENT ISOLATION
ACTUATE
ACTUATE
CONTAINMENT TEMPERATURE
I
I
TB
TB
2/2
MANUAL PASSIVE CONTAINMENT COOLING
ACTUATE
ACTUATE
MANUAL CONTAINMENT HYDROGEN IGNITER
ON
OFF
ON
OFF
CONTAINMENT HYDROGEN IGNITER CONTROL (ON/OFF)
NOTES:
1. ISOLATION OF ONLY SELECTED CRITICAL CONTAINMENT PENETRATIONS.
2. OPENS ISOLATION VALVES IN SERIES WITH CHECK VALVES.
3. OPENS ISOLATION VALVES IN RECIRCULATION LINES WITHOUT CHECK VALVES.
4. LOGICAL "AND" FUNCTION PERFORMED BY SQUIB VALVE CONTROLLER.
MANUAL CONTAINMENT RECIRCULATION/ IRWST DRAIN
ARM
ACTUATE
(NOTE 4)
OPEN CONTAINMENT RECIRCULATION ISOLATION VALVES (NOTE 3)
CLOSE CONTAINMENT ISOLATION VALVES (NOTE 1)
OPEN PCS VALVES
CORE EXIT TEMPERATURE
I
I
I
I

NRC 138

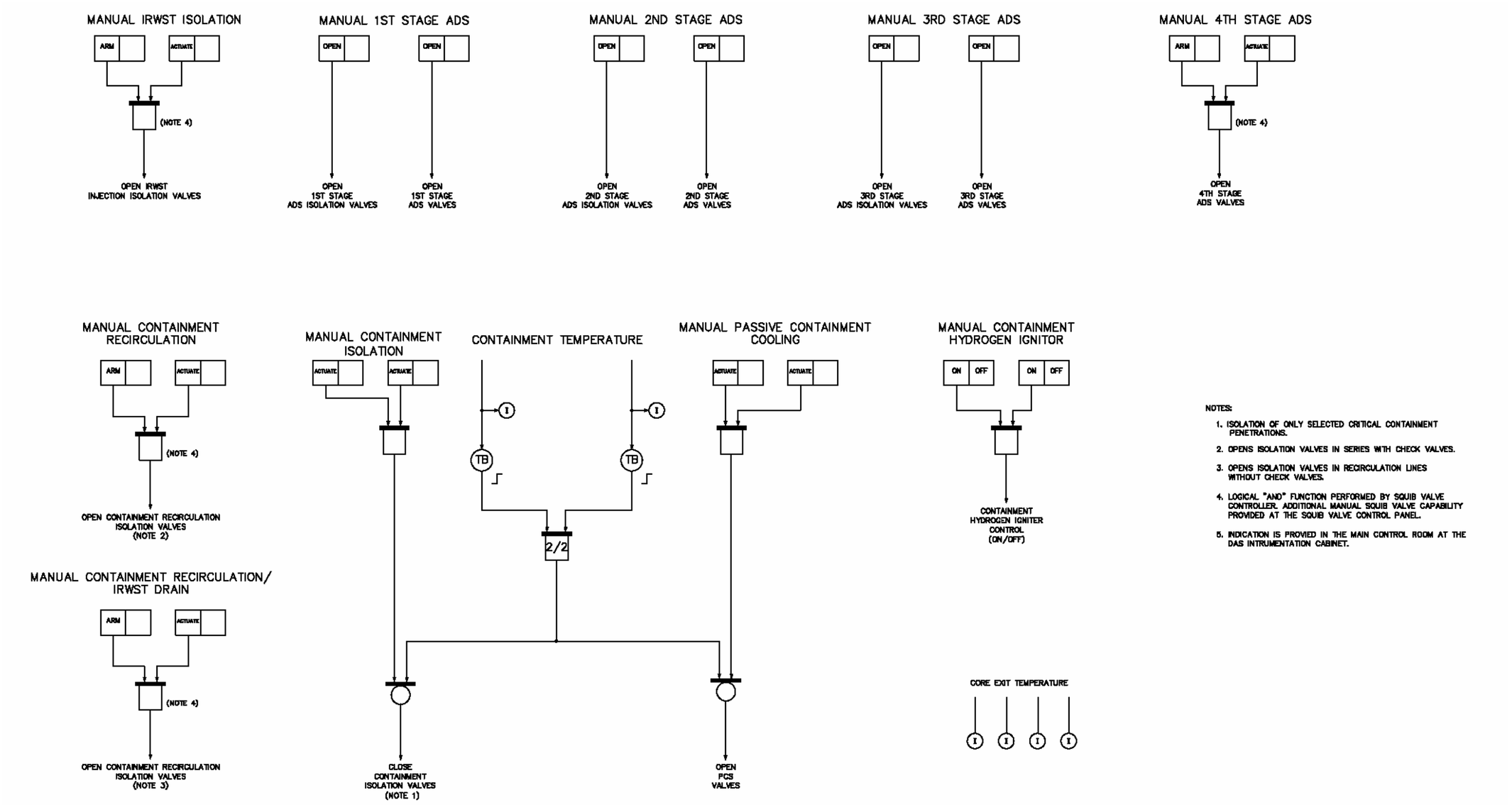

Figure 7.2-1 (Sheet 20 of 20)

Functional Diagram
Diverse Actuation System Logic, Manual Actuations

7.3 Engineered Safety Features

AP1000 provides instrumentation and controls to sense accident situations and initiate engineered safety features (ESF). The occurrence of a limiting fault, such as a loss of coolant accident or a secondary system break, requires a reactor trip plus actuation of one or more of the engineered safety features. This combination of events prevents or mitigates damage to the core and reactor coolant system components, and provides containment integrity.

7.3.1 Description

The protection and safety monitoring system is actuated when safety system setpoints are reached for selected plant parameters. The selected combination of process parameter setpoint violations is indicative of primary or secondary system boundary ruptures. Once the required logic combination is generated, the protection and safety monitoring system equipment sends the signals to actuate appropriate engineered safety features components. ~~A block diagram of the protection and safety monitoring system is provided in Figure 7.1-2.~~

NRC 114

The following paragraphs summarize the major functional elements of the protection and safety monitoring system that are involved in generating an actuation signal to an engineered safety features component.

Four sensors normally monitor each variable used for an engineered safety feature actuation. (These sensors may monitor the same variable for a reactor trip function.) Analog measurements are converted to digital form by analog-to-digital converters within each of the four divisions of the protection and safety monitoring system. Following required signal conditioning or processing, the measurements are compared against the setpoints for the engineered safety feature to be generated. When the measurement exceeds the setpoint, the output of the comparison results in a channel partial trip condition. The partial trip information is transmitted to the ESF coincidence logic to form the signals that result in an engineered safety features actuation. The voting logic is performed twice within each division. Each voting logic element generates an actuation signal if the required coincidence of partial trips exists at its inputs.

The signals are combined within each division of ESF coincidence logic to generate a system-level signal. System-level manual actions are also processed by the logic in each division.

The system-level signals are then broken down to the individual actuation signals to actuate each component associated with a system-level engineered safety feature. For example, a single safeguards actuation signal must trip the reactor and the reactor coolant pumps, align core makeup tank and in-containment refueling water storage tank valves, and initiate containment isolation. The interposing logic accomplishes this function and also performs necessary interlocking so that components are properly aligned for safety. Component-level manual actions are also processed by this interposing logic. The power interface transforms the low level signals to voltages and currents commensurate with the actuation devices they operate. The actuation devices, in turn, control motive power to the final engineered safety feature component.

7.3.1.2.16 Steam Dump Block

Signals to block steam dump (turbine bypass) are generated from either of the following conditions:

1. Low-2 reactor coolant system average temperature
2. Manual initiation

Condition 1 results from a coincidence of two of the four divisions of reactor loop average temperature (T_{avg}) below the Low-2 setpoint. This blocks the opening of the steam dump valves. This signal also becomes an input to the steam dump interlock selector switch for unblocking the steam dump valves used for plant cooldown.

Condition 2 consists of three sets of controls. The first set of two controls selects whether the steam dump system has its normal manual and automatic operating modes available or is turned off. The second set of two controls enables or disables the operations of the Stage 1 cooldown steam dump valves if the reactor coolant average temperature (T_{avg}) is below the Low-2 setpoint. The third set of two controls enables or disables the operation of the Stage 2 cooldown steam dump valves.

The functional logic relating to the steam dump block is illustrated in Figure 7.2-1, sheet 10.

7.3.1.2.17 Control Room Isolation and Air Supply Initiation

Signals to initiate isolation of the main control room, to initiate the air supply, and to open the control room pressure relief isolation valves are generated from either of the following conditions:

1. High-2 control room air supply radioactivity level
2. Loss of ac power sources (low Class 1E battery charger input voltage) NRC 112
3. Manual initiation

Condition 1 is the occurrence one of two control room air supply radioactivity monitors detecting a radioactivity level above the High-2 setpoint.

Condition 2 results from the loss of all ac power sources. A preset time delay is provided to permit the restoration of ac power from the offsite sources or from the onsite diesel generators before initiation. The loss of all ac power is detected by undervoltage sensors that are connected to the input of each of the four Class 1E battery chargers. Two sensors are connected to each of the four battery charger inputs. The loss of ac power signal is based on the detection of an undervoltage condition by each of the two sensors connected to two of the four battery chargers. The two-out-of-four logic is based on an undervoltage to the battery chargers for divisions A or C coincident with an undervoltage to the battery chargers for divisions B or D.

Condition 3 consists of two momentary controls. Manual actuation of either of the two controls will result in control room isolation and air supply initiation.

Table 7.3-1 (Sheet 6 of 9)

ENGINEERED SAFETY FEATURES ACTUATION SIGNALS

Actuation Signal	No. of Division/ Controls	Actuation Logic	Permissives and Interlocks
f. High-3 pressurizer level	4	2/4-BYP[1]	Manual block permitted below P-19 Automatically unblocked above P-19
13. Block of Boron Dilution (Figure 7.2-1, Sheets 3 and 15)			
a. Flux doubling calculation	4	2/4-BYP[1]	Manual block permitted when critical or intentionally approaching criticality Automatically unblocked below P-6
b. Undervoltage to Class 1E battery chargers[(8)]	2/charger	2/2 per charger and 2/4 chargers[5]	None
c. Reactor trip (P-4)	1/division	2/4	None
14. Chemical Volume Control System Isolation (See Figure 7.2-1, Sheets 6 and 11)			
a. High-2 pressurizer water level	4	2/4-BYP[1]	Automatically unblocked above P-19 Manual block permitted below P-19
b. High-2 steam generator narrow range level	4/steam generator	2/4-BYP[1] in either steam generator	None
c. Automatic or manual safeguards actuation signal coincident with	(See items 1a through 1e)		
High-1 pressurizer water level	4	2/4-BYP[1]	None
d. High-2 containment radioactivity	4	2/4-BYP[1]	None
e. Manual initiation	2 controls	1/2 controls	None
f. Flux doubling calculation	4	2/4-BYP[1]	Manual block permitted when critical or intentionally approaching criticality Automatically unblocked below P-6
15. Steam Dump Block (Figure 7.2-1, Sheet 10)[(8)]			
a. Low reactor coolant temperature (Low-2 T_{avg})	2/loop	2/4-BYP[1]	None
b. Mode control	2 controls	1/division	None

NRC 112

Table 7.3-1 (Sheet 8 of 9)

ENGINEERED SAFETY FEATURES ACTUATION SIGNALS

Actuation Signal	No. of Divisions/ Controls	Actuation Logic	Permissives and Interlocks
21. Open In-Containment Refueling Water Storage Tank (IRWST) Injection Line Valves (Figure 7.2-1, Sheets 12 and 16)			
a. Automatic reactor coolant system depressurization (fourth stage)	(See items 3d and 3e)		
NRC 111 NRC 112 ~~b. Coincident loop 1 and loop 2 Low-2 hot leg level (after delay)~~b~~e~~. Manual initiation	~~1 per loop~~4 controls	~~2/2~~2/4 controls[3]	~~Manual unblock permitted below P-12 Automatically blocked above P-12~~None
22. Open Containment Recirculation Valves In Series with Check Valves (Figure 7.2-1, Sheet 15 and 16)			
a. Extended undervoltage to Class 1E battery chargers[(8)]	2/charger	1/2 per charger and 2/4 chargers	None
23. Open All Containment Recirculation Valves (Figure 7.2-1, Sheet 16)			
a. Automatic reactor coolant system depressurization (fourth stage coincident with)		(See items 3d through 3f)	
Low IRWST level (Low-3 setpoint)	4	2/4 BYP[1]	None
b. Manual initiation	4 controls	2/4 controls[3]	None
24. Chemical and Volume Control System Letdown Isolation (Figure 7.2-1, Sheet 16)			
a. Low-1 hot leg level	1 per loop	1/2	Manual block permitted above P-12 Automatically unblocked below P-12
25. Pressurizer Heater Trip (Figure 7.2-1, Sheets 6 and 12)			
a. Core makeup tank injection	(See items 6a through 6e)		
b. High-3 pressurizer level	4	2/4 BYP[1]	Manual block permitted below P-19 Automatically unblocked above P-19

Table 7.3-2 (Sheet 1 of 4)

INTERLOCKS FOR ENGINEERED SAFETY FEATURES ACTUATION SYSTEM

Designation	Derivation	Function
P-3	Reactor trip breaker open	Permits manual reset of safeguards actuation signal to block automatic safeguards actuation
$\overline{\text{P-3}}$	Reactor trip breakers closed	Automatically resets the manual block of automatic safeguards actuation
P-4	Reactor trip initiated or reactor trip breakers open	(a) Isolates main feedwater if coincident with low reactor coolant temperature (b) Trips turbine (c) Blocks boron dilution
$\overline{\text{P-4}}$	No reactor trip initiated and reactor trip breakers closed	Removes demand for isolation of main feedwater, turbine trip and boron dilution block
NRC 111 P-6	Intermediate range neutron flux channels above setpoint	None~~Allows manual block of flux doubling actuation of the boron dilution block.~~
$\overline{\text{P-6}}$	Intermediate range neutron flux channels below setpoint	None
P-11	Pressurizer pressure below setpoint	(a) Permits manual block of safeguards actuation on low pressurizer pressure, low compensated steam line pressure, or low reactor coolant inlet temperature (b) Permits manual block of steam line isolation on low reactor coolant inlet temperature (c) Permits manual block of steam line isolation and steam generator power-operated relief valve block valve closure on low compensated steam line pressure (d) Coincident with manual actions of (b) or (c), automatically unblocks steam line isolation on high negative steam line pressure rate (e) Permits manual block of main feedwater isolation on low reactor coolant temperature

Table 7.3-2 (Sheet 3 of 4)

INTERLOCKS FOR ENGINEERED SAFETY FEATURES ACTUATION SYSTEM

Designation	Derivation	Function
P-12	Pressurizer level below setpoint	(a) Permits manual block of core makeup tank actuation on low pressurizer level to allow mid-loop operation (b) Permits manual block of reactor coolant pump trip on low pressurizer level to allow mid-loop operation (c) Permits manual block of auxiliary spray and purification line isolation on low pressurizer level to allow mid-loop operation (d) Coincident with manual action of (a), automatically unblocks ~~in-containment refueling water storage tank injection and~~ fourth stage automatic depressurization system initiation on low hot leg level to provide protection during mid-loop operation. (e) Automatically unblocks chemical and volume control system letdown isolation on Low-1 hot leg level
$\overline{\text{P-12}}$	Pressurizer level above setpoint	(a) Prevents manual block of core makeup tank actuation on low pressurizer level (b) Prevents manual block of reactor coolant pump trip on low pressurizer level (c) Prevents manual block of auxiliary spray and purification line isolation on low pressurizer level (d) Provides confirmatory open signal to the core makeup tank cold leg balance lines (e) Automatically blocks ~~in-containment refueling water storage tank injection and~~ fourth stage automatic depressurization system initiation on low hot leg level to reduce the probability of spurious actuation. (f) Permits manual block of chemical and volume control system letdown isolation on Low-1 hot leg level

NRC 081
NRC 111

NRC 081
NRC 111

Table 7.3-4 (Sheet 2 of 2)

ENGINEERED SAFETY FEATURES ACTUATION, VARIABLES, LIMITS, RANGES, AND ACCURACIES (NOMINAL)

Variables	Range of Variables	Typical Accuracy(1)	Typical Response Time (Sec)(2)
Pressurizer water level	0 to 100% of cylindrical portion of pressurizer	± 10% of span	1.0
Startup feedwater flow	0 to 1000 gpm	±7% of span	1.0
Neutron flux (flux doubling calculation)	1 to 10^6 c/sec	± 30% of span	1.0(3)
NRC 111 Control room supply air radiation level	10^{-12}~~$^{-7}$~~ to 10^{-2} μ Ci/cc	± 50% of setpoint	20
Containment radioactivity	10^0 to 10^7 R/hr	± 50% of setpoint	20

Notes:

1. Measurement uncertainty typical of actual applications. Harsh environments allowance have been included where applicable.
2. Delay from the time that the process variable exceeds the setpoint until the time that an output is provided to the actuated device.
3. Response time depends on flux doubling calculation.

Table 7.5-1 (Sheet 2 of 12)

POST-ACCIDENT MONITORING SYSTEM

Variable	Range/ Status	Type/ Category	Qualification		Number of Instruments Required	Power Supply	QDPS Indication (Note 2)	Remarks
			Environmental	Seismic				
Core exit temperature	200-2300°F	B1, C1, F2	Harsh	Yes	3/quadrant	1E	Yes	
PRHR HX inlet temperature	50-650°F	D3	None	None	1	Non-1E	No	Primary indication is RCS T_H
PRHR HX outlet temperature	50-500°F	B1, D2	Harsh	Yes	1	1E	Yes	Diverse variable to PRHR flow
PRHR flow	700-3000 gpm	B1, D2, F2	Harsh	Yes	2	1E	Yes	Diverse measurement: PRHR outlet temperature
IRWST water level	0-100% of span	B1, D2, F2	Harsh	Yes	3 (Note 4)	1E	Yes	
RCS subcooling (Note 6)	200°F Sub-cooling to 35°F super heat	B1, F2	Harsh	Yes	2	1E	Yes	Diverse measurement: Core exit temperature & wide range RCS pressure
Passive containment cooling water flow	0-150 gpm	B1, D2	Mild	Yes	1 (Note 1)	1E	Yes	
PCS storage tank water level	5-100% of tank height	B1, D2	Mild	Yes	2	1E	Yes	Diverse measurement: PCS flow
IRWST surface temperature	50-300°F	D3	None	None	1	Non-1E	No	
IRWST bottom temperature	50-300°F	D3	None	None	1	Non-1E	No	
Steam line pressure	0-13~~2~~00 psig	F2	Harsh/ Mild (Note 8)	Yes	1/steam generator (Note 11)	1E	No	

NRC 112
NRC 145

Table 7.5-1 (Sheet 7 of 12)

POST-ACCIDENT MONITORING SYSTEM

Variable	Range/ Status	Type/ Category	Qualification		Number of Instruments Required	Power Supply	QDPS Indication (Note 2)	Remarks
			Environmental	Seismic				
Water-cooled chiller status	On/Off	F3	None	None	1/chiller	Non-1E	No	
Water-cooled chilled water pump status	On/Off	F3	None	None	1/pump	Non-1E	No	
Water-cooled chilled water valve status	Open/ Closed	F3	None	None	1/valve	Non-1E	No	
Spent fuel pool pump flow	0-1500 gpm	F3	None	None	1/pump	Non-1E	No	
Spent fuel pool temperature	50-250°F	F3	None	None	1	Non-1E	No	
Spent fuel pool water level	0-100% of span	D2, F3	Mild	Yes	3 (Note 4)	1E	Yes	
CMT discharge isolation valve status	Open/ Closed	D2	Harsh	Yes	1/valve (Note 7)	1E	Yes	
CMT inlet isolation valve status	Open/ Closed	D2	Harsh	Yes	1/valve (Note 7)	1E	Yes	
CMT upper water level sensor	74.5% - 64% of Volume ~~78.0% - 63.5% of span~~	D2, F2	Harsh	Yes	1/tank	1E	Yes	
CMT lower water level sensor	27% - 17% of Volume ~~30.5% - 16% of span~~	D2, F2	Harsh	Yes	1/tank	1E	Yes	
IRWST injection isolation valve (Squib)	Open/ Closed	D2	Harsh	Yes	1/valve (Note 7)	1E	Yes	
IRWST line isolation valve status (MOV)	Open/ Closed	D3	None	None	1/valve	Non-1E	No	
ADS: first, second and third stage valve status	Open/ Closed	D2	Harsh	Yes	1/valve (Note 7)	1E	Yes	

NRC 145

Table 7.5-1 (Sheet 9 of 12)

POST-ACCIDENT MONITORING SYSTEM

Variable	Range/ Status	Type/ Category	Qualification		Number of Instruments Required	Power Supply	QDPS Indication (Note 2)	Remarks
			Environmental	Seismic				
Purification return line stop valve status	Open/ Closed	D2	Harsh	None	1	Non-1E	No	
Boric acid tank level	0-100%	F3	None	None	1	Non-1E	No	
Demineralized water isolation valve status	Open/ Closed	D2	Mild	Yes	1/valve (Note 7)	1E	Yes	
Boric acid flow	0-175 gpm	F3	None	None	1	Non-1E	No	
Makeup blend valve status	Position	F3	None	None	1	Non-1E	No	
Makeup flow	0-175 gpm	F3	None	None	1	Non-1E	No	
Makeup pump status	On/Off	F3	None	None	1/pump	Non-1E	No	
Makeup flow control valve status	Position	F3	None	None	1	Non-1E	No	
Letdown flow	0-120 gpm	F3	None	None	1	Non-1E	No	
RNS hot leg suction isolation valve status	Open/ Closed	D2	Harsh	Yes	1/valve (Note 7)	1E	Yes	
RNS flow	0-3000 gpm	F3	None	None	1/pump	Non-1E	No	
NRC 084 RCS sampling line isolation valve status	Open/ Closed	E3	Harsh	None	1/valve	Non-1E	No	

Table 7.5-1 (Sheet 10 of 12)

POST-ACCIDENT MONITORING SYSTEM

Variable	Range/ Status	Type/ Category	Qualification		Number of Instruments Required	Power Supply	QDPS Indication (Note 2)	Remarks
			Environmental	Seismic				
IRWST to RNS suction valve status	Open/ Closed	B1, F3	Harsh	Yes	1 (Note 7)	1E	Yes	
RNS discharge to IRWST valve status	Open/ Closed	F3	None	None	1/valve	Non-1E	No	
RNS pump status	On/Off	F3	None	None	1/pump	Non-1E	No	
Reactor vessel head vent valve status	Open/ Closed	D2	Harsh	Yes	1/valve Note 7)	1E	Yes	
MCR return air isolation valve status	Open/ Closed	D2, F3	Mild	Yes	1/valve (Note 7)	1E	Yes	
MCR toilet exhaust isolation valve status	Open/ Closed	D2	Mild	Yes	1/valve (Note 7)	1E	Yes	
MCR supply air isolation valve status	Open/ Closed	D2, F3	Mild	Yes	1/valve (Note 7)	1E	Yes	
MCR differential pressure	-1" to +1" wg	D2	Mild	Yes	2	1E	Yes	
MCR air delivery flowrate	0-80 cfm	D2	Mild	Yes	2	1E	Yes	
NRC 145 MCR pressure relief isolation valve status	Open/ Closed	D2	Mild	Yes	1/valve	1E	Yes	

Table 7.5-1 (Sheet 12 of 12)

POST-ACCIDENT MONITORING SYSTEM

Variable	Range/ Status	Type/ Category	Qualification		Number of Instruments Required	Power Supply	QDPS Indication (Note 2)	Remarks
			Environmental	Seismic				
Main steam line radiation level	10^{-1} - 10^{3} µCi/cc	C2, E2	Mild	None	1/line	Non-1E	No	
~~Technical support center~~ Control support area radiation	10^{-1} - 10^{4} mR/hr	E3	None	None	1	Non-1E	No	
Meteorological parameters	N/A	E3	None	None	N/A	Non-1E	No	Site specific
Primary sampling station area radiation level	10^{-1} - 10^{7} mR/hr	E3	None	None	1	Non-1E	No	

NRC 123
NRC 050
NRC 052

Notes:

NRC 123
NRC 050
NRC 052

1. Total flow measurement is obtained from the sum of four branch flow devices.
2. The same information is available in the control support area~~technical support center~~ via the monitor bus. Information available on the qualified data processing system is also available at the remote shutdown workstation.
3. Noble gas: 10^{-7} to 10^{5} µCi/cc
   Particulate: 10^{-12} to 10^{-7} µCi/cc
   Iodines: 10^{-11} to 10^{-6} µCi/cc
4. The number of instruments required after stable plant conditions is two. A third channel is available through temporary connections to resolve information ambiguity if necessary (See subsection 7.5.4).
5. Noble gas: 10^{-7} to 10^{-2} µCi/cc
   Particulate: 10^{-12} to 10^{-7} µCi/cc
   Iodines: 10^{-11} to 10^{-5} µCi/cc
6. Degree of subcooling is calculated from RCS wide range pressure and core exit temperature.
7. This instrument is not required after 24 hours.
8. Two steam line pressure instruments per SG are located inside containment, and are qualified for a harsh environment. Two steam line pressure instruments per SG are located outside containment (not in MSIV compartment), and are qualified for a mild environment.
9. MCR supply air radiation monitoring is not required after MCR has been isolated.
10. This instrument is only required when non-safety power is available.
11. This instrument is not required if non-Class 1E UPS power is not available.
12. These devices are backup verification to qualified system status parameters. These devices are purchased to perform in their anticipated service environments for the plant conditions for which they must function.

Table 7.5-7 (Sheet 4 of 4)

SUMMARY OF TYPE D VARIABLES

System	Variable	Type/Category
Containment Cooling	Containment temperature	D2
	PCS water storage tank series isolation valve status (MOV)	D2
	PCS water storage tank isolation valve status (non-MOV)	D2
	Passive containment cooling water flow	D2
	PCS storage tank water level	D2
HVAC System Status	MCR return air isolation valve status	D2
	MCR toilet exhaust isolation valve status	D2
	MCR supply air isolation valve status	D2
	MCR air delivery isolation valve status	D2
	MCR pressure relief isolation valve status	D2
	MCR air storage bottle pressure	D2
	MCR differential pressure	D2
	MCR air delivery flowrate	D2
Main Steam	Turbine stop valve status	D2
	Turbine control valve status	D2
	Condenser steam dump valve status	D2

NRC 112
NRC 145

Table 7.5-8

SUMMARY OF TYPE E VARIABLES

Function Monitored	Variable	Type/Category
Containment Radiation	Containment area high range radiation level	E2
Area Radiation	Control support area~~Technical support center~~ radiation level	E3
	Primary sampling station area radiation level	E3
Airborne Radioactivity Released from Plant	Turbine island vent discharge radiation level	E2
	Plant vent radiation level	E2
	Plant vent air flow	E2
	Main steam line radiation level	E2
	Boundary environs radiation	E3
	Main control room supply air radiation level	E3
Environs Radiation and Radioactivity	Site specific	E3
Meteorology	Site specific	E3
Accident Sampling	Primary coolant	E3
	Containment air	E3

NRC 050
NRC 052

Chapter 8

CHAPTER 8

ELECTRIC POWER

8.1 Introduction

8.1.1 Utility Grid Description

NRC 076 The operating company grid system and interconnections to other grid systems and generating stations are as described ~~site-specific~~.

8.1.2 Onsite Power System Description

The onsite power system is comprised of the main ac power system and the dc power system. The main ac power system is a non-Class 1E system. The dc power system consists of two independent systems: Class 1E dc system and non-Class 1E dc system. The ac and dc onsite power system configurations are shown on Figures 8.3.1-1 and 8.3.2-1, -2 and -3, respectively.

The normal ac power supply to the main ac power system is provided from the station main generator. When the main generator is not available, plant auxiliary power is provided from the switchyard by backfeeding through the main stepup and unit auxiliary transformers. This is the preferred power supply. When neither the normal or the preferred power supply is available due to an electrical fault at either the main stepup transformer, unit auxiliary transformer, isophase bus, or 6.9kv nonsegregated bus duct, fast bus transfer will be initiated to transfer the loads to the reserve auxiliary transformers powered by maintenance sources of power. In addition, two non-Class 1E onsite standby diesel generators supply power to selected loads in the event of loss of the normal, preferred, and maintenance power sources. The reserve auxiliary transformers also
NRC 076 serve as a source of maintenance power. The maintenance sources are as described~~site-specific~~.

The main generator is connected to the offsite power system by three single-phase stepup transformers. The normal power source for the plant auxiliary ac loads comes from the generator bus through two unit auxiliary transformers of identical rating. In the event of a loss of the main generator, the power is maintained without interruption from the preferred power supply by an autotrip of the main generator breaker. Power then flows from the switchyard to the auxiliary loads through the main and unit auxiliary transformers.

A spare single-phase main stepup transformer is provided in the transformer area. The spare can be placed in service upon failure of one phase of the main stepup transformers.

The onsite standby power system, powered by the two onsite standby diesel generators, supplies power to selected loads in the event of loss of other ac power sources. Loads that are priority loads for investment protection due to their specific functions (permanent nonsafety loads) are selected for access to the onsite standby power supply. Availability of the standby power source is not required to accomplish any safety function.

NRC 076

two identically rated unit auxiliary transformers and an additional unit auxiliary transformer for the electric auxiliary boiler and as described site-specific loads.

- The onsite standby power system supplies ac power to the selected permanent nonsafety loads in the event of a main generator trip concurrent with the loss of preferred power source and maintenance power source when under fast bus transfer conditions. The onsite standby diesel generators are automatically connected to the associated 6.9 kV buses upon loss of bus voltage only after the generator rated voltage and frequency is established. Loads that are important for orderly plant shutdown are sequentially connected as shown in subsection 8.3.1 during this event.

  The permanent nonsafety loads are not required for the plant safe shutdown; therefore, the onsite standby power system is a nonsafety-related system and non-Class 1E.

- For continued operation of the plant, a spare single-phase main transformer can be placed in service upon failure of one phase of the main stepup transformers.

8.1.4.3 Design Criteria, Regulatory Guides, and IEEE Standards

Refer to Table 8.1-1 for guidelines, and their applicability to Chapter 8.

The offsite and onsite ac power systems have no safety function and, therefore, their conformance to General Design Criteria, Regulatory Guides and IEEE Standards is not required, except as indicated in Table 8.1-1.

The Class 1E dc power system design is based on the following:

- General Design Criteria (GDC)

  See Section 3.1 for a discussion of conformance to the General Design Criterion.

- Nuclear Regulatory Commission (NRC) Regulatory Guides

  See Section 1.9 for the list and details of conformance to the regulatory guides.

- IEEE Standards.

  The Class 1E dc power system design is based on the following IEEE Standards that are generally acceptable to the NRC as stated in the referenced Regulatory Guides:

  – IEEE 308-1991, IEEE Standard Criteria for Class 1E Power Systems for Nuclear Power Generating Stations. Refer to Regulatory Guide 1.32.

  – IEEE 317-1983, IEEE Standard for Electrical Penetration Assemblies in Containment Structures for Nuclear Power Generating Stations. Refer to Regulatory Guide 1.63.

  – IEEE 323-1974, IEEE Standard for Qualifying Class 1E Equipment for Nuclear Power Generating Stations. Refer to Regulatory Guide 1.89.

Chapter 9

wind, tornados, floods, and external missiles by the external walls of the auxiliary building. See Section 3.5 for additional discussion on protection from missiles. The facility is designed to maintain its structural integrity following a safe shutdown earthquake and to perform its intended function following a postulated event such as fire, internal missiles, or pipe break. The walls surrounding the fuel handling area and new fuel storage pit protect the fuel from missiles generated inside the auxiliary building. The fuel handling area does not contain a credible source of missiles. Refer to subsection 1.2.4.3 for a discussion of the auxiliary building. Refer to Section 3.8 for a discussion of the structural design of the new fuel storage area. Refer to subsection 3.5.1 for a discussion of missile sources and protection.

The dry, unlined, approximately 17-feet deep reinforced concrete pit is designed to provide support for the new fuel storage rack. The rack is supported by the pit floor and laterally supported as required at the rack top by the pit wall structures. The walls of the new fuel pit are seismic Category I. The new fuel pit is normally covered to prevent foreign objects from entering the new fuel storage rack. Since the only crane that can access the new fuel pit does not have the capacity to lift heavy objects, as defined in subsection 9.1.5, the new fuel pit cover is not designed to protect the fuel assemblies from the effects of dropped heavy objects. Figures 1.2-7 through 1.2-10 show the relationship between the new fuel storage facility and other features of the fuel handling area.

The new fuel storage pit is drained by gravity drains that are part of the radioactive waste drain system (subsection 9.3.5), draining to the waste holdup tanks which are part of the liquid radwaste system (Section 11.2). These drains preclude flooding of the pit by an accidental release of water.

Nonseismic equipment in the vicinity of the new fuel storage rack is evaluated to confirm that its failure could not result in an increase of K_{eff} beyond the maximum allowable K_{eff}. Refer to subsection 3.7.3.13 for a discussion of the nonseismic equipment evaluation.

The new fuel handling crane is used to load new fuel assemblies into the new fuel rack and transfer new fuel assemblies from the new fuel pit into the spent fuel pool. The capacity of the new fuel handling crane is limited to lifting a fuel assembly, control rod assembly, and handling tool. The new fuel pit is not accessed by the fuel handling machine or by the cask handling crane. This precludes the movement of loads greater than fuel components over stored new fuel assemblies.

During fuel handling operations, a ventilation system removes gaseous radioactivity from the atmosphere above the new fuel pit. Refer to subsection 9.4.3 for a discussion of the fuel handling area HVAC system and Section 11.5 for process radiation monitoring. Security for the new fuel
NRC 128 assemblies is described in separate security documents referred to in Section 13.6.

9.1.1.2.1 New Fuel Rack Design

A. Design and Analysis of the New Fuel Rack

The new fuel storage racks are purchased equipment. The rack array center-to-center spacing of nominally 10.9 inches provides a minimum separation between adjacent fuel assemblies sufficient with neutron absorbing material to maintain a subcritical array. The purchase specification for the new fuel storage racks will require the vendor to perform confirmatory

Calculations are performed to demonstrate that the impact energy is absorbed by the dropped fuel assembly, the rack cells, and the rack base plate assembly.

The second accident condition assumes that the dropped assembly, control rod assembly, and handling tool (2027 pounds) falls straight through an empty cell and impacts the rack base plate from a drop height of 3 feet above the top of the rack. An analysis is performed that demonstrates the impact energy is absorbed by the fuel assembly and the rack base plate. The resulting rack deformations are evaluated in the criticality analysis to demonstrate that the criticality criteria are not violated.

D. Failure of the New Fuel Handling Crane

The fuel handling crane is a seismic Category II component. The crane and the attachment to the building structure is evaluated to show that the crane does not fall into the new fuel storage pit during a seismic event.

E. Internally Generated Missiles

The fuel handling area does not contain any credible sources of internally generated missiles.

Stress analyses are performed by the vendor using loads developed by the dynamic analysis. Stresses are calculated at critical sections of the rack and compared to acceptance criteria referenced in ASME Section III, Division I, Article NF3000.

9.1.1.3 Safety Evaluation

The rack, being a seismic Category I structure, is designed to withstand normal and postulated dead loads, live loads, loads resulting from thermal effects, and loads caused by the safe shutdown earthquake event.

The design of the rack is such that K_{eff} remains less than or equal to 0.95 with new fuel of the maximum design basis enrichment. For a postulated accident condition of flooding of the new fuel storage area with unborated water, K_{eff} does not exceed 0.98.

NRC 104

The new fuel storage racks ~~is~~are purchased equipment. The purchase specification for the new fuel storage racks requires a criticality analysis of the new fuel storage racks. The criticality evaluation considers the inherent neutron absorbing effect of the materials of construction, including fixed neutron absorbing "poison" material.

The new fuel rack is located in the new fuel storage pit, which has a cover to protect the new fuel from debris. No loads are required to be carried over the new fuel storage pit while the cover is in place. The cover is designed such that it will not fall and damage the fuel or fuel rack during a seismic event. Administrative controls are utilized when the cover is removed for new fuel transfer operations to limit the potential for dropped object damage.

The rack is also designed with adequate energy absorption capabilities to withstand the impact of a dropped fuel assembly from the maximum lift height of the new fuel handling crane. Handling equipment (cask handling crane) capable of carrying loads heavier than fuel components is

The heavy loads analysis is to confirm that a postulated load drop does not cause unacceptable damage to reactor fuel elements, or loss of safe shutdown or decay heat removal capability.

9.1.5.4 Inservice Inspection/Inservice Testing

Preoperational inspection and testing of overhead cranes is governed by ASME NOG-1. Tests include operational testing with 100 percent load to demonstrate function and speed controls for bridge, trolley, and hoist drives and proper functioning of limit switches, locking, and safety devices. A rated load test is performed with a 125 percent load.

Following plant startup, inservice inspection of overhead cranes is governed by site-specific procedures in accordance with ANSI B30.2. Testing of crane modifications is governed by ASME NOG-1. Inservice inspection and testing of other cranes and hoists is in accordance with manufacturer's recommendations and applicable industry standards.

In-service inspection and testing of special lifting devices and slings used in safety-related areas of the plant are in accordance with ANSI N14.6 and ANSI B30.9.

9.1.6 Combined License Information for Fuel Storage and Handling

9.1.6.1 Structural Dynamic and Stress Analysis for New Fuel Rack

The Combined License information requested in this subsection has been completely addressed in APP-GW-GLR-026 (Reference 16), and the applicable changes are incorporated into the DCD. No additional work is required by the Combined License applicant.

The following words represent the original Combined License Information Item commitment, which has been addressed as discussed above:

> The Combined License applicant is responsible for a confirmatory structural dynamic and stress analysis for the new fuel rack, as described in subsection 9.1.1.2.1.

9.1.6.2 Criticality Analysis for New Fuel Rack

The Combined License information requested in this subsection has been completely addressed in APP-GW-GLR-030 (Reference 17), and the applicable changes are incorporated into the DCD. No additional work is required by the Combined License applicant.

The following words represent the original Combined License Information Item commitment, which has been addressed as discussed above:

> The Combined License applicant is responsible for a confirmatory criticality analysis for the new fuel rack, as described in subsection 9.1.1.3. This report (Reference 17) ~~analysis should~~ addresses the degradation of integral neutron absorbing material in the new fuel pool storage racks as identified in GL-96-04, and assesses the integral neutron absorbing material capability to maintain a 5-percent subcriticality margin.

NRC 104

NRC 104

3. ANSI N210-76, Design Objectives for Light Water Reactor Spent Fuel Storage Facilities at Nuclear Power Stations.

4. ANS 57.2-1983, Design Requirements for Light Water Reactor Spent Fuel Storage Facilities at Nuclear Power Plants.

5. Nuclear Regulatory Commission letter to All Power Reactor Licensees, from B. K. Grimes, "OT Position for Review and Acceptance of Spent Fuel Storage and Handling Applications," April 14, 1978.

6. ANS 57.1-1992, Design Requirements for Light Water Reactor Fuel Handling Systems.

7. Specifications for Electric Overhead Travelling Cranes CMAA, Specification 70 - 1999.

8. USNRC, "Control of Heavy Loads at Nuclear Power Plants," NUREG-0612, July 1980.

9. "Overhead and Gantry Cranes," ANSI/ASME B30.2-1990.

10. Deleted.

11. USNRC, "Single-Failure-Proof Cranes for Nuclear Power Plants," NUREG-0554, May 1979.

12. "Rules for Construction of Overhead and Gantry Cranes (Top Running Bridge, Multiple Girder)," ASME NOG-1-1998.

13. Deleted.

14. "Special Lifting Devices for Shipping Containers Weighing 10,000 Pounds or More," ANSI N14.6-1993.

15. "Slings," ASME/ANSI B30.9-1996.

16. APP-GW-GLR-026, “New Fuel Storage Rack Structural/Seismic Analysis,” Westinghouse Electric Company LLC.

17. APP-GW-GLR-030, “New Fuel Storage Rack Criticality Analysis,” Westinghouse Electric Company LLC, May 2006. NRC 104

18. APP-GW-GLR-033, “Spent Fuel Storage Rack Structural/Seismic Analysis,” Westinghouse Electric Company LLC.

19. APP-GW-GLR-045, “Evaluation of Critical Structures,” Westinghouse Electric Company LLC.

20. APP-GW-GLR-029, “Spent Fuel Storage Racks Criticality Analysis,” Westinghouse Electric Company LLC.

21. USNRC, 10 CFR 50.68, “Criticality Accident Requirements,” January 2003.

22. USNRC, Regulatory Guide 1.124, Revision 1, “Service Limits and Loading Combinations for Class 1 Linear-Type Component Supports,” January 1978.

Table 9.1-4

STATION BLACKOUT/SEISMIC EVENT TIMES[1]

Event	Time to Saturation[1] (hours)	Height of Water Above Fuel at 72 Hours[4] (feet)	Height of Water Above Fuel at 7 Days[4] (feet)
NRC 161 Seismic Event[2] – Power Operation Immediately Following a Refueling[7]	6.50~~7.8~~	1.6~~2.4~~[6]	1.6~~2.4~~[6]
NRC 161 Seismic Event[8] – Refueling, Immediately Following Spent Fuel Region Offload[3][7]	4.68~~5.6~~	8.3[5]	8.3[5]
NRC 161 Seismic Event[8] – Refueling, Emergency Full Core Off-Load[3] Immediately Following Refueling[7]	1.37~~3.1~~	8.3[5]	8.3[6]

Notes:

1. Times calculated neglect heat losses to the passive heat sinks in the fuel area of the auxiliary building.
2. Seismic event assumes water in the pool is initially drained to the level of the spent fuel pool cooling system connection simultaneous with a station blackout. Fuel cooling water sources are spent fuel pool, fuel transfer canal (including gate), and cask washdown pit for 72 hours. Between 72 hours and 7 days fuel cooling water provided from passive containment cooling system ancillary water storage tank.
3. Fuel movement complete, 150 hours after shutdown.
4. See subsection 9.1.3.5 for minimum water level.
5. Alignment of PCS water storage for supply of makeup water permits maintaining pool level at this elevation. Decay heat in reactor vessel is less that 9 MW, thus no PCS water is required for containment cooling.
6. Alignment of the PCS ancillary water storage tank and initiation of PCS recirculation pumps provide a makeup water supply to maintain this pool level or higher above the top of the fuel.
7. The number of fuel assemblies refueled has been conservatively established to include the worst case between an 18-month fuel cycle plus 5 defective fuel assemblies (69 total assemblies or 44% of the core) and a 24-month fuel cycle plus 5 defective fuel assemblies (77 total assemblies or 49% of the core).
8. Seismic event assumes water in the pool is initially drained to the level of the spent fuel pool cooling system connection simultaneous with a station blackout. Fuel cooling water sources are spent fuel pool, fuel transfer canal (including gate), cask washdown pit, and passive containment cooling system water storage tank for 7 days.

seat wear of inside containment isolation valve. This valve operator has a flow restricting orifice in the air line, so it opens more slowly than inside containment letdown flow isolation valve. In addition, during brief periods of shutdown, when the reactor coolant system is water solid, this valve throttles to maintain the reactor coolant system pressure. Manual control is also provided in the main control room and at the remote shutdown workstation.

Makeup Stop Valve

This normally open, air-operated stop check valve is located inside containment and functions to isolate the flow in the charging line to the reactor coolant system. This valve can be closed from the main control room or the remote shutdown workstation to isolate charging downstream of the regenerative heat exchanger. This valve is closed to support the auxiliary spray function. The valve fails open on loss of power or loss of instrument air so the charging line to the reactor coolant system remains available.

Auxiliary Spray Line Isolation Valve

This normally closed, air-operated globe valve is located inside containment, downstream of the regenerative heat exchanger, and functions to isolate the auxiliary spray line to the reactor coolant system pressurizer. This valve is opened to provide flow to the auxiliary spray line during heatups and cooldowns to add chemicals or to collapse the steam bubble in the pressurizer. This valve fails closed on a loss of power or loss of instrument air to accomplish the function of preserving the reactor coolant pressure boundary. This valve closes automatically on a low-1 pressurizer level signal from the protection and safety monitoring system to preserve reactor coolant pressure boundary. This valve is operated from the main control room and the remote shutdown workstation.

Makeup Line Containment Isolation Valves

These normally open, motor-operated globe valves provide containment isolation of the chemical and volume control system makeup line and automatically close on a high-2 pressurizer level, high steam generator level, or high-2 containment radiation signal from the protection and safety monitoring system. The valves close on a source range flux doubling signal to terminate possible unplanned boron dilution events. The valves also close on a safeguards actuation signal coincident with high-1 pressurizer level. This allows the chemical and volume control system to continue providing reactor coolant system makeup flow, if the makeup pumps are operating following a safeguards actuation signal. These valves are also controlled by the reactor makeup control system and close when makeup to other systems is provided. Manual control is provided in the main control room and at the remote shutdown workstation.

NRC 157

Hydrogen Addition Containment Isolation Valve

This normally closed, fail closed, air-operated globe valve is located outside containment in the hydrogen addition line. The valve automatically closes on a containment isolation signal from the protection and safety monitoring system. Manual control is provided in the main control room and at the remote shutdown workstation.

9.3.6.4.3.2.1 Ion Exchange Media Replacement

The initial and subsequent fill of ion exchange media is made through a resin fill nozzle on the top of the ion exchange vessel. When the media is spent and ready to be transferred to the solid radwaste system (WSS), the vessel is isolated from the process flow. The flush water line is opened to the sluice piping and demineralized water is pumped into the vessel through the normal process outlet connection upward through the media retention screen. The media fluidizes in the upward, reverse flow. When the bed has been fluidized, the sluice connection is opened and the bed is sluiced to the spent resin tanks in the solid radwaste system. Demineralized water flow continues until the bed has been removed and the sluice lines are flushed clean of spent resin.

9.3.6.4.3.2.2 Filter Cartridge Replacement

Replacement of spent filter cartridges is performed as described in subsection 11.4.2.3.2.

9.3.6.4.4 Abnormal Operation

9.3.6.4.4.1 Reactor Coolant System Leak

The chemical and volume control system is capable of making up for a small reactor coolant system leak with either makeup pump at reactor coolant system pressures above the low pressure setpoint.

9.3.6.4.5 Accident Operation

The chemical and volume control system can provide borated makeup to the reactor coolant system following accidents such as small loss-of-coolant accidents, steam generator tube rupture events, and small steam line breaks. In addition, pressurizer auxiliary spray can reduce reactor coolant system pressure during certain events such as a steam generator tube rupture.

To protect against steam generator overfill, the makeup function is isolated by closing the makeup line containment isolation valves, if a high steam generator level signal is generated. These valves also close and isolate the system on a high pressurizer level signal.

Some of the valves in the chemical and volume control system are required to operate under accident conditions to effect reactor coolant system pressure boundary and containment isolation, as discussed in subsection 9.3.6.3.7.

9.3.6.4.5.1 Boron Dilution Events

NRC 157

The chemical and volume control system is designed to address a boron dilution accident by closing ~~either one of two~~ redundant safety-related~~,~~ valves, tripping the makeup pumps and/or aligning the suction of the makeup pumps to the boric acid tank.~~air-operated valves from the demineralized water system to the makeup pump suction.~~

NRC 157

For dilution events occurring at power (assuming the operator takes no action), a reactor trip is initiated on either an overpower trip or an overtemperature ΔT trip. Following a reactor trip signal, the line from the demineralized water system is isolated by closing two safety-related, ~~remotely~~

NRC 157

air-operated valves. The three-way pump suction control valve aligns so the makeup pumps take suction from the boric acid tank. ~~When~~ If the event~~trip~~ occurs while the makeup pumps are operating, the realignment of these valves causes the makeup pumps, if they continue to operate, to borate the plant.

NRC 157

For dilution events during shutdown, the source range flux doubling signal is used to isolate the makeup line to the reactor coolant~~from the demineralized water~~ system by closing the two safety-related, ~~remotely~~ motor operated valves, isolate the line from the demineralized water system by closing the two safety-related, air-operated valves and trip the makeup pumps. ~~The three-way pump suction control valve aligns the makeup pumps to take suction from the boric acid tank and therefore stops the dilution.~~ For refueling operations, administrative controls are used to prevent boron dilutions by verifying the valves in the line from the demineralized water system are closed and secured.

9.3.6.5 Design Evaluation

The chemical and volume control system has redundant, safety-related isolation valves and piping to protect the reactor coolant system pressure boundary, and is designed in accordance with ANSI/ANS-51.1 (Reference 4).

The chemical and volume control system lines that penetrate containment incorporate valve and piping arrangements, meeting the containment isolation criteria described in subsection 6.2.3.

Since the chemical and volume control system supplies unborated water to the reactor coolant system, the potential for inadvertent boron dilution events exists. A safety-related method of stopping an inadvertent boron dilution, which operates as described in subsection 9.3.6.4.5.1, is incorporated into the chemical and volume control system.

The chemical and volume control system also incorporates a safety-related method of isolating the makeup to the reactor coolant system upon receipt of a high steam generator level signal or a high pressurizer level signal, as described in subsection 9.3.6.4.5. Other chemical and volume control system components are not safety-related.

Chemical and volume control system components and piping are compatible with the radioactive fluids they contain or functions they perform.

The design of the chemical and volume control system is based on specific General Design Criteria and regulatory guides. The design of the chemical and volume control system is compared to the criteria set forth in subsection 9.3.4, "Chemical and Volume Control System (PWR) (Including Boron Recovery System)," Revision 2, of the Standard Review Plan. The specific General Design Criteria identified in the Standard Review Plan section are General Design Criteria 1, 2, 3, 4, 14, 29, 30, 31, 32, 33, 53, 54, 56, 60, and 61 as discussed in Section 3.1. Additionally, subsection 1.9.1 discusses compliance with Regulatory Guides 1.26 and 1.29.

9.3.6.6 Inspection and Testing Requirements

The only required surveillance are for containment and reactor coolant pressure boundary isolation valves and boron dilution mitigation valves. These valves are identified as active and are tested in accordance with the in-service test provisions provided in Table 3.9-16.

Other chemical and volume control system components are monitored for acceptable performance as follows:

- Mixed and cation bed demineralizer -- monitor for bed exhaustion by comparing reactor coolant system samples to samples taken at the outlet of the reactor coolant filter.
- Reactor coolant and makeup filters -- remotely monitor differential pressure with the installed gages and change the filter cartridges, or switch to the backup filter when high differential pressure is detected with the installed pressure gage.

Inspection of the various components is required in accordance with their safety class. The safety classification assignments can be found in Section 3.2.

9.3.6.6.1 Preoperational Inspection and Testing

Preoperational tests are conducted to verify proper operation of the chemical and volume control system. The preoperational tests include valve inspection and testing and flow testing.

9.3.6.6.1.1 Valve Inspection and Testing

The inspection requirements of the chemical and volume control system valves that constitute the reactor coolant pressure boundary are consistent with those identified in subsection 5.2.4. The inspection requirements of the chemical and volume control system valves that isolate the lines penetrating containment are consistent with those identified in Section 6.6.

9.3.6.6.1.2 Flow Testing

Each chemical and volume control system pump is tested to measure the flow rate from each makeup pump to the reactor coolant system. Testing will be performed with the pump suction aligned to the boric acid tank and the discharge aligned to the reactor coolant system. Testing will also be performed with the pump suction aligned to the boric acid tank and the discharge aligned to the pressurizer auxiliary spray. Flow will be measured using instrumentation in the pump discharge line. Testing will confirm that each pump provides at least 100 gallons per minute of makeup flow at normal reactor coolant system operating pressure. This is the minimum flow rate necessary to meet the chemical and volume control system functional requirement of providing makeup and pressurizer spray to support the functions described in subsection 9.3.6.4.4.1. Testing is performed to verify that the maximum makeup flow with both pumps operating is less than
NRC 157 175~~200~~ gpm, as assumed in the boron dilution analyses presented in subsection 15.4.6. Testing is performed with both pumps operating and taking suction from the demineralized water system. The chemical and volume control system is aligned to the reactor coolant system at a pressure at or near atmospheric pressure.

level signal (plant control system), these valves automatically close to provide isolation of the letdown line. The letdown isolation valves also receive a signal from the protection and safety monitoring system to automatically close and isolate letdown during midloop operations based on a low hot leg level. Manual control is provided from the main control room and at the remote shutdown workstation. The letdown flow control valve controls reactor coolant system pressure during startup, as described in subsection 9.3.6.4.1.

- **Demineralized water system isolation valves** – To prevent inadvertent boron dilution, the demineralized water system isolation valves close on a signal from the protection and safety monitoring system derived from either a reactor trip signal, a source range flux doubling signal, low input voltage (loss of ac power) to the 1E dc and ~~uninterruptable~~ uninterruptible power supply system battery chargers, or a safety injection signal providing a safety-related method of stopping an inadvertent dilution. The main control room and remote shutdown workstation provide manual control for these valves.

NRC 157

- **Makeup isolation valves** – To isolate the makeup flow to the reactor coolant system, two valves are provided in the chemical and volume control system makeup line. These valves automatically close on a signal from the protection and safety monitoring system derived from source range flux doubling, ~~either a~~ high-2 pressurizer level, high steam generator level ~~signal~~, or a safeguards signal coincident with high-1 pressurizer level to protect against pressurizer or steam generator overfill. Manual control for these valves is provided in the main control room and at the remote shutdown workstation. In addition, the valves close on a high-2 containment radiation signal to protect containment integrity.

NRC 157

- **Makeup flow control** – To control makeup flow to the reactor coolant system, a flow controller, which operates in the makeup line, in conjunction with the makeup control system is provided in the chemical and volume control system makeup pump discharge line. This flow controller controls makeup flow by modulating a flow control valve.

- **Makeup pump control** – The makeup pumps can be controlled from the main control room and at the remote shutdown workstation. On a signal from the plant control system generated by a low pressurizer level signal (relative to the programmed level), one of the chemical and volume control system makeup pumps starts automatically to provide makeup. The operating pump automatically stops when the pressurizer level increases to the correct value. During reactor coolant system boron changes (fuel depletion, startups, shutdowns, and refueling), the operator starts one of the makeup pumps after selecting the desired amount of boric acid.

  The makeup pumps can be used to provide reactor coolant system makeup following an accident such as a small loss-of-coolant accident, a steam generator tube rupture, or a small steam line break. Following a safeguards actuation signal, if necessary, the operator remotely opens the makeup line isolation valves. One makeup pump automatically starts to control the pressurizer level between 10 and 20 percent. In addition, a makeup pump may be used to provide pressurizer auxiliary spray in reducing the reactor coolant system pressure for certain accident scenarios.

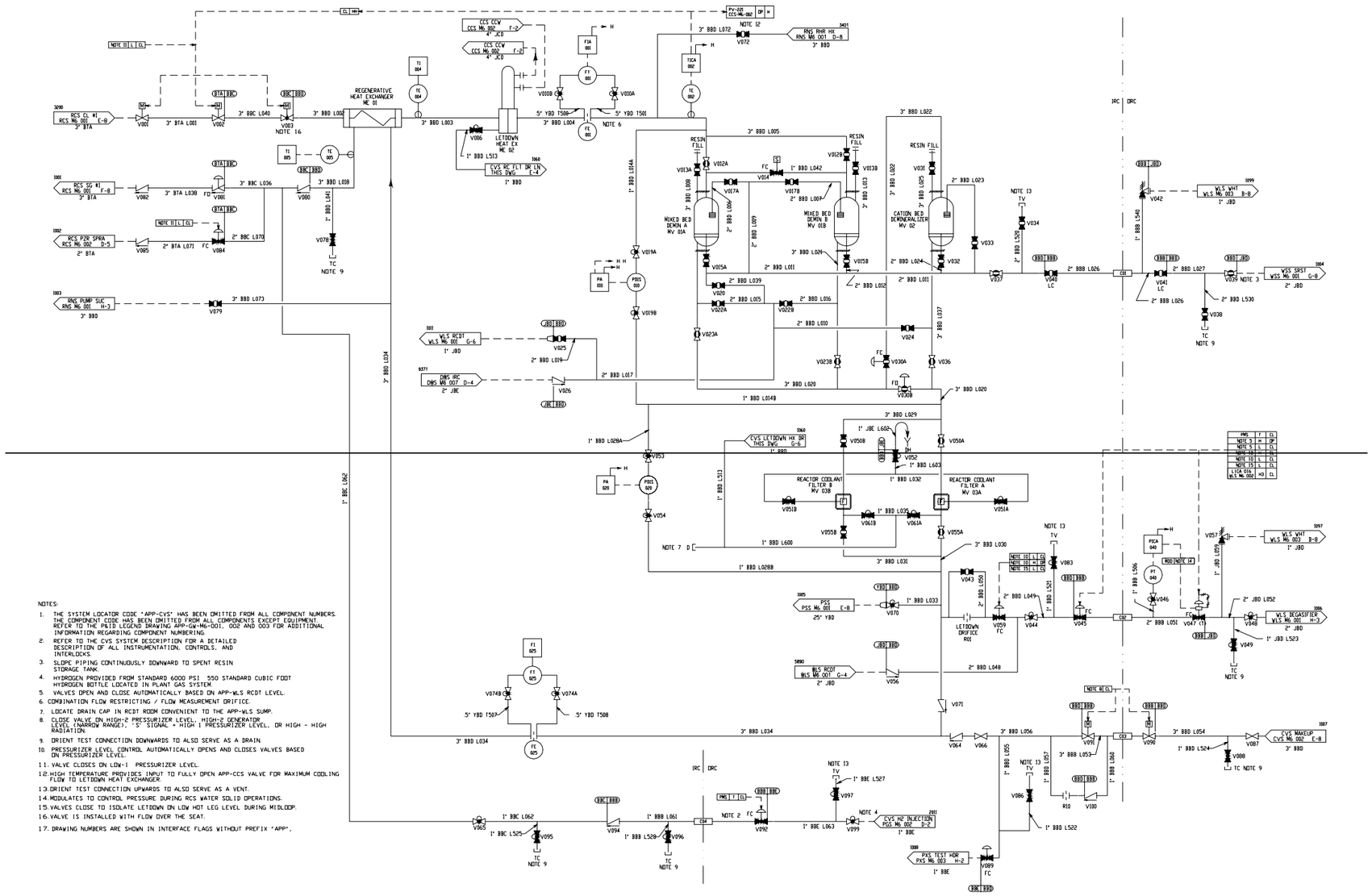
REGENERATIVE HEAT EXCHANGER ME 01
LETDOWN HEAT EX ME 02
MIXED BED DEMIN A MV 01A
MIXED BED DEMIN B MV 01B
CATION BED DEMINERALIZER MV 02
REACTOR COOLANT FILTER B MV 03B
REACTOR COOLANT FILTER A MV 03A
LETDOWN ORIFICE R01
RCS CL H1 RCS M6 001 E-8
RCS SG H1 RCS M6 002 F-8
RCS PZR SPRA RCS M6 002 D-5
RNS PUMP SUC RNS M6 001 H-3
RNS RHR HX RNS M6 001 D-8
CVS RC FLT DR LN THIS DWG E-4
CVS LETDOWN HX DR THIS DWG G-6
WLS RCDT WLS M6 001 G-6
DWS IRC DWS M6 007 D-4
WLS WHT WLS M6 003 B-8
VSS DRST VSS M6 001 G-8
CVS MAKEUP CVS M6 002 E-8
CVS H2 INJECTION PGS M6 002 D-2
PXS TEST HDR PXS M6 003 H-2
WLS DEGASIFIER WLS M6 001 H-3
PSS PSS M6 003 E-8
WLS RCDT WLS M6 007 G-4
NOTES:
1. THE SYSTEM LOCATOR CODE "APP-CVS" HAS BEEN OMITTED FROM ALL COMPONENT NUMBERS. THE COMPONENT CODE HAS BEEN OMITTED FROM ALL COMPONENTS EXCEPT EQUIPMENT. REFER TO THE P&ID LEGEND DRAWING APP-GW-M6-001, 002 AND 003 FOR ADDITIONAL INFORMATION REGARDING COMPONENT NUMBERING.
2. REFER TO THE CVS SYSTEM DESCRIPTION FOR A DETAILED DESCRIPTION OF ALL INSTRUMENTATION, CONTROLS, AND INTERLOCKS.
3. SLOPE PIPING CONTINUOUSLY DOWNWARD TO SPENT RESIN STORAGE TANK.
4. HYDROGEN PROVIDED FROM STANDARD 6000 PSI 550 STANDARD CUBIC FOOT HYDROGEN BOTTLE LOCATED IN PLANT GAS SYSTEM.
5. VALVES OPEN AND CLOSE AUTOMATICALLY BASED ON APP-WLS RCDT LEVEL.
6. COMBINATION FLOW RESTRICTING / FLOW MEASUREMENT ORIFICE.
7. LOCATE DRAIN CAP IN RCDT ROOM CONVENIENT TO THE APP-WLS SUMP.
8. CLOSE VALVE ON HIGH-2 PRESSURIZER LEVEL, HIGH-2 GENERATOR LEVEL (NARROW RANGE), "S" SIGNAL + HIGH 1 PRESSURIZER LEVEL, OR HIGH - HIGH RADIATION.
9. ORIENT TEST CONNECTION DOWNWARDS TO ALSO SERVE AS A DRAIN.
10. PRESSURIZER LEVEL CONTROL AUTOMATICALLY OPENS AND CLOSES VALVES BASED ON PRESSURIZER LEVEL.
11. VALVE CLOSES ON LOW-1 PRESSURIZER LEVEL.
12. HIGH TEMPERATURE PROVIDES INPUT TO FULLY OPEN APP-CCS VALVE FOR MAXIMUM COOLING FLOW TO LETDOWN HEAT EXCHANGER.
13. ORIENT TEST CONNECTION UPWARDS TO ALSO SERVE AS A VENT.
14. MODULATES TO CONTROL PRESSURE DURING RCS WATER SOLID OPERATIONS.
15. VALVES CLOSE TO ISOLATE LETDOWN ON LOW HOT LEG LEVEL DURING MIDLOOP.
16. VALVE IS INSTALLED WITH FLOW OVER THE SEAT.
17. DRAWING NUMBERS ARE SHOWN IN INTERFACE FLAGS WITHOUT PREFIX "APP".

NRC 157

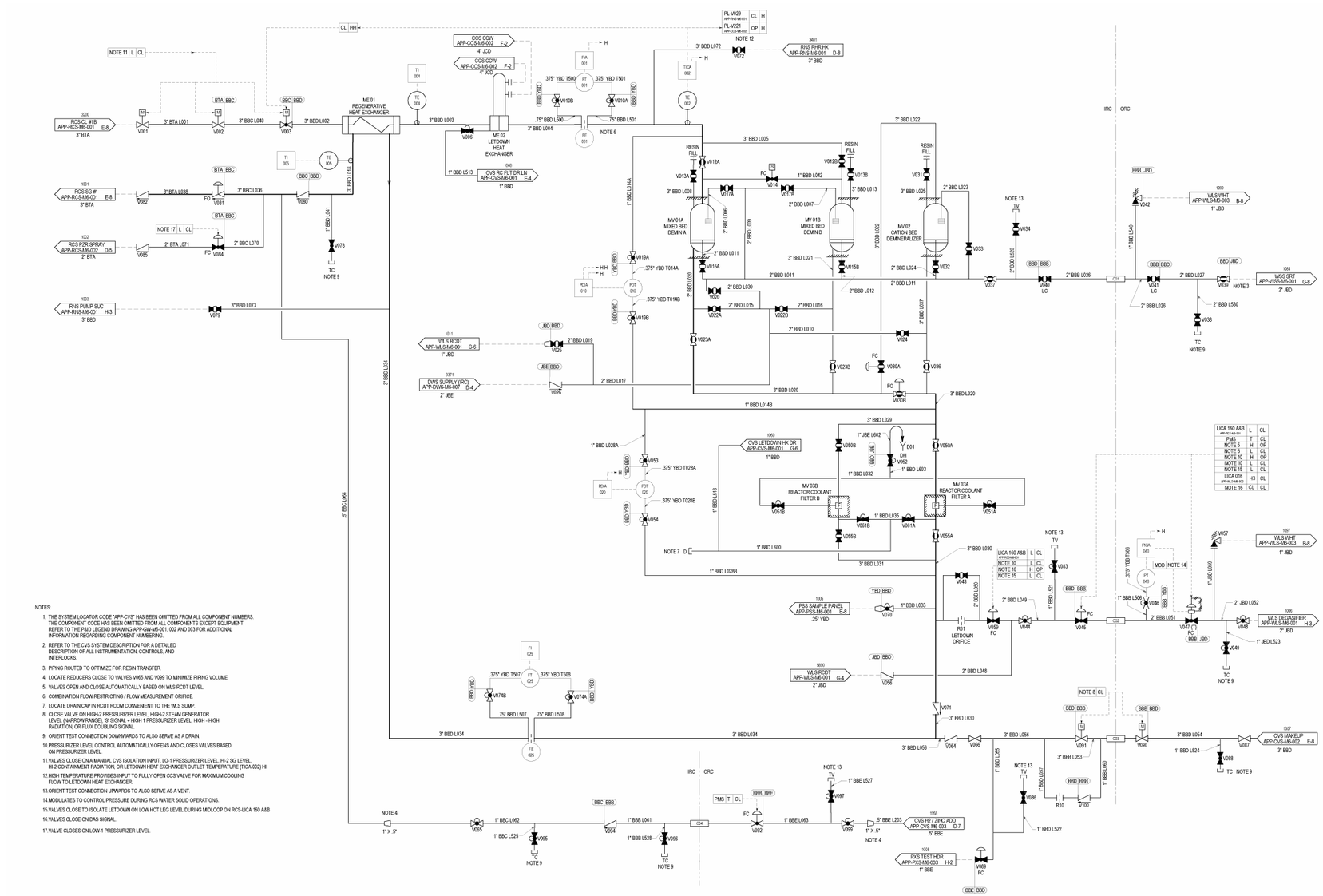

Figure 9.3.6-1 (Sheet 1 of 2)

Chemical and Volume Control
System Piping and Instrumentation Diagram
(REF) CVS 001

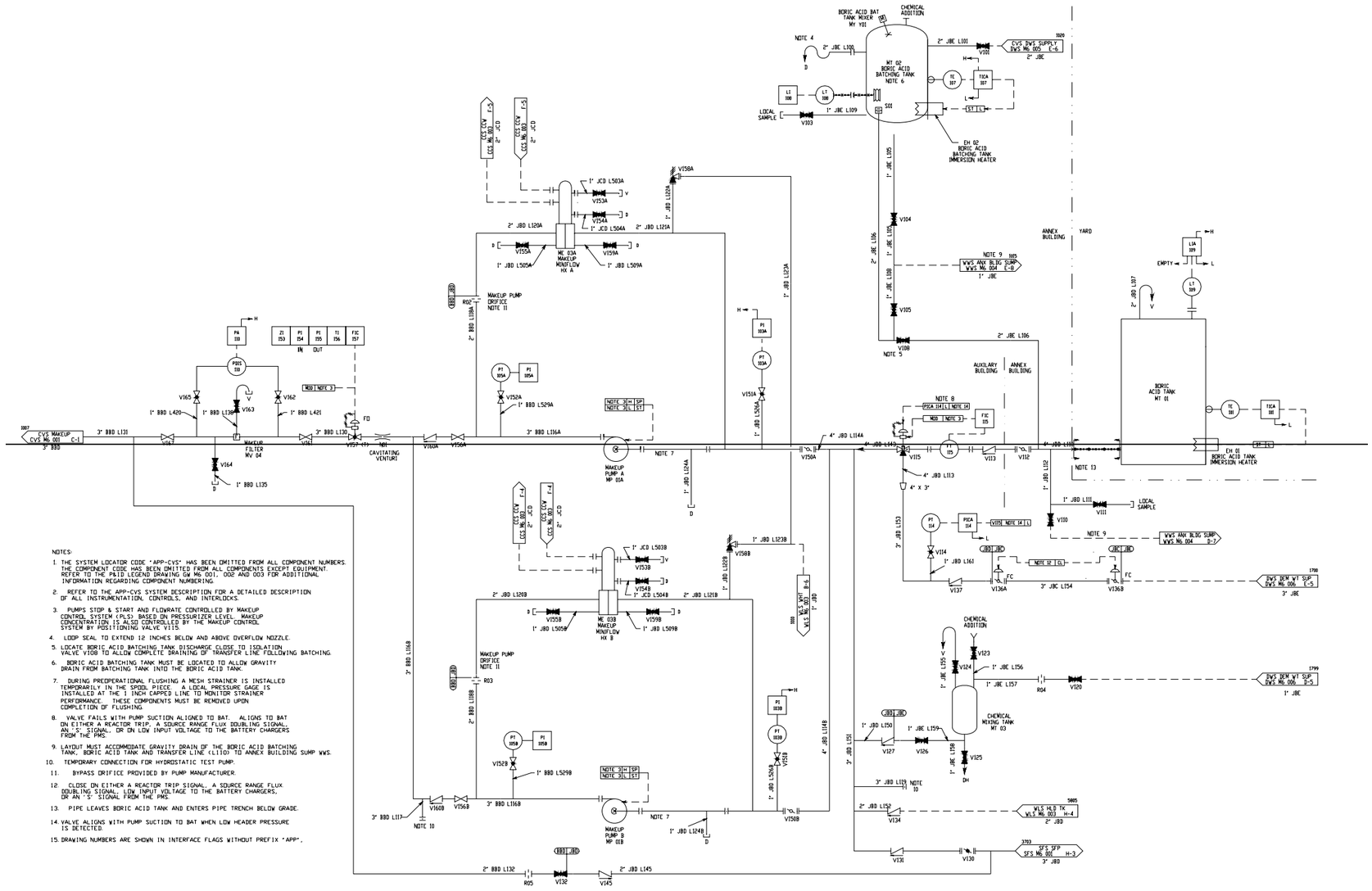
BORIC ACID BAT TANK MIXER MY 101
CHEMICAL ADDITION
MT 02 BORIC ACID BATCHING TANK NOTE 6
EH 02 BORIC ACID BATCHING TANK IMMERSION HEATER
CVS BVS SUPPLY BVS MG 005 E-6
CVS MAKEUP CVS MG 001 C-1
MAKEUP FILTER MV 04
CAVITATING VENTURI
MAKEUP PUMP A MP 01A
MAKEUP PUMP B MP 01B
MAKEUP PUMP ORIFICE NOTE 11
ME 03A MAKEUP MINIFLOW HX A
ME 03B MAKEUP MINIFLOW HX B
ANNEX BUILDING
YARD
AUXILIARY BUILDING
BORIC ACID TANK MT 01
EH 01 BORIC ACID TANK IMMERSION HEATER
LOCAL SAMPLE
WWS ANX BLDG SUMP WWS MG 004 E-8
WWS ANX BLDG SUMP WWS MG 004 D-7
BVS DEM VT SUP BVS MG 006 E-5
CHEMICAL MIXING TANK MT 03
WLS HLD TK WLS MG 003 H-4
SFS SFP SFS MG 002 H-3
NOTES:
1. THE SYSTEM LOCATOR CODE "APP-CVS" HAS BEEN OMITTED FROM ALL COMPONENT NUMBERS. THE COMPONENT CODE HAS BEEN OMITTED FROM ALL COMPONENTS EXCEPT EQUIPMENT. REFER TO THE P&ID LEGEND DRAWING GW M6 001, 002 AND 003 FOR ADDITIONAL INFORMATION REGARDING COMPONENT NUMBERING.
2. REFER TO THE APP-CVS SYSTEM DESCRIPTION FOR A DETAILED DESCRIPTION OF ALL INSTRUMENTATION, CONTROLS, AND INTERLOCKS.
3. PUMPS STOP & START AND FLOWRATE CONTROLLED BY MAKEUP CONTROL SYSTEM (PLS) BASED ON PRESSURIZER LEVEL. MAKEUP CONCENTRATION IS ALSO CONTROLLED BY THE MAKEUP CONTROL SYSTEM BY POSITIONING VALVE V115.
4. LOOP SEAL TO EXTEND 12 INCHES BELOW AND ABOVE OVERFLOW NOZZLE.
5. LOCATE BORIC ACID BATCHING TANK DISCHARGE CLOSE TO ISOLATION VALVE V108 TO ALLOW COMPLETE DRAINING OF TRANSFER LINE FOLLOWING BATCHING.
6. BORIC ACID BATCHING TANK MUST BE LOCATED TO ALLOW GRAVITY DRAIN FROM BATCHING TANK INTO THE BORIC ACID TANK.
7. DURING PREOPERATIONAL FLUSHING A MESH STRAINER IS INSTALLED TEMPORARILY IN THE SPOOL PIECE. A LOCAL PRESSURE GAGE IS INSTALLED AT THE 1 INCH CAPPED LINE TO MONITOR STRAINER PERFORMANCE. THESE COMPONENTS MUST BE REMOVED UPON COMPLETION OF FLUSHING.
8. VALVE FAILS WITH PUMP SUCTION ALIGNED TO BAT. ALIGNS TO BAT ON EITHER A REACTOR TRIP, A SOURCE RANGE FLUX DOUBLING SIGNAL, AN "S" SIGNAL, OR ON LOW INPUT VOLTAGE TO THE BATTERY CHARGERS FROM THE PMS.
9. LAYOUT MUST ACCOMMODATE GRAVITY DRAIN OF THE BORIC ACID BATCHING TANK, BORIC ACID TANK AND TRANSFER LINE (L110) TO ANNEX BUILDING SUMP WWS.
10. TEMPORARY CONNECTION FOR HYDROSTATIC TEST PUMP.
11. BYPASS ORIFICE PROVIDED BY PUMP MANUFACTURER.
12. CLOSE ON EITHER A REACTOR TRIP SIGNAL, A SOURCE RANGE FLUX DOUBLING SIGNAL, LOW INPUT VOLTAGE TO THE BATTERY CHARGERS, OR AN "S" SIGNAL FROM THE PMS.
13. PIPE LEAVES BORIC ACID TANK AND ENTERS PIPE TRENCH BELOW GRADE.
14. VALVE ALIGNS WITH PUMP SUCTION TO BAT WHEN LOW HEADER PRESSURE IS DETECTED.
15. DRAWING NUMBERS ARE SHOWN IN INTERFACE FLAGS WITHOUT PREFIX "APP".

NRC 157

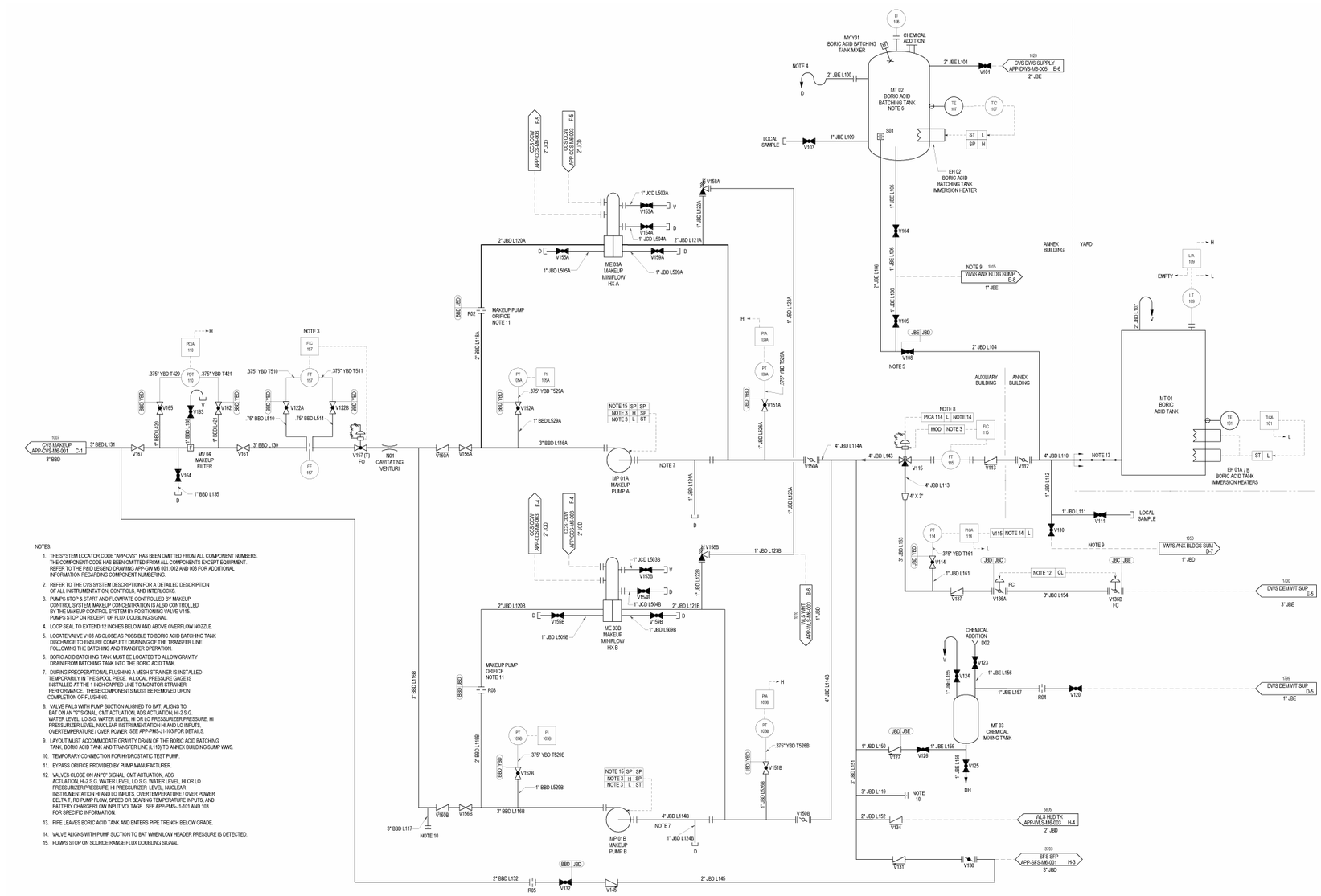

Figure 9.3.6-1 (Sheet 2 of 2)

Chemical and Volume Control
System Piping and Instrumentation Diagram
(REF) CVS 002

nonsafety-related and nonseismic. The equipment is procured to meet the environmental qualifications used in standard building practice.

The nuclear island nonradioactive ventilation system is designed to control the radiological habitability in the main control room within the guidelines presented in Standard Review Plan (SRP) 6.4 and NUREG 0696 (Reference 1), if the system is operable and ac power is available.

NRC 050
NRC067

Portions of the system that provide the defense-in-depth function of filtration of main control room/control support area~~technical support center~~ air during conditions of abnormal airborne radioactivity are designed, constructed, and tested to conform with Generic Issue B-36, as described in Section 1.9 and Regulatory Guide 1.140 (Reference 30), as described in Appendix 1A, and the applicable portions of ASME AG-1 (Reference 36), ASME N509 (Reference 2), and ASME N510 (Reference 3).

Power to the ancillary fans to provide post-72-hour ventilation of the control room and I&C rooms is supplied from divisions B and C regulating transformers through two series fuses for isolation. The fuses protect the regulating transformers from failures of the non-1E fan circuits. When normal ventilation is available the ancillary fan circuits are disconnected from the supply with manual normally-open switches.

The nuclear island nonradioactive ventilation system is designed to provide a reliable source of heating, ventilation, and cooling to the areas served when ac power is available. The system equipment and component functional capabilities are to minimize the potential for actuation of the main control room emergency habitability system or the potential reliance on passive equipment cooling. This is achieved through the use of redundant equipment and components that are connected to standby onsite ac power sources.

9.4.1.1.2 Power Generation Design Basis

NRC 050
NRC 067
NRC 123

Main Control Room/Control Support Area (CSA)~~Technical Support Center~~ Areas

The nuclear island nonradioactive ventilation system provides the following specific functions:

- Controls the main control room and control support area relative humidity between 25 to 60 percent

NRC 050
NRC 067
NRC 123

- Maintains the main control room and CSA~~control support~~ areas at a slightly positive pressure with respect to the adjacent rooms and outside environment during normal operations to prevent infiltration of unmonitored air into the main control room and CSA~~control support~~ areas

NRC 050
NRC 067
NRC 123

- Isolates the main control room and/or CSA~~control support~~ area from the normal outdoor air intake and provides filtered outdoor air to pressurize the main control room and CSA~~control support~~ areas to a positive pressure of at least 1/8 inch wg when a high gaseous radioactivity concentration is detected in the main control room supply air duct

NRC 050
NRC 067
NRC 123

- Isolates the main control room and/or CSA ~~control support~~ area from the normal outdoor air intake and provides 100 percent recirculation air to the main control room and CSA~~control support~~ areas when a high concentration of smoke is detected in the outside air intake

- Provides smoke removal capability for the main control room and control support area

- Maintains the main control room emergency habitability system passive cooling heat sink below its initial design ambient air temperature limit of 75°F

- Maintains the main control room/control support area carbon dioxide levels below 0.5 percent concentration and the air quality within the guidelines of Table 1 and Appendix C, Table C-1 of Reference 32.

The background noise level in the main control room does not exceed 65 dB(A) when the VBS is operating.

The system maintains the following room temperatures based on the maximum and minimum outside air safety temperature conditions shown in Chapter 2, Table 2-1:

Area	Temperature (°F)
Main control room	67 - 75
Control support area	67 – 78

Class 1E Electrical Rooms/Remote Shutdown Room

The nuclear island nonradioactive ventilation system provides the following specific functions:

- Exhausts air from the Class 1E battery rooms to limit the concentration of hydrogen gas to less than 2 percent by volume in accordance with Regulatory Guide 1.128 (Reference 31).

- Maintains the Class 1E electrical room emergency passive cooling heat sink below its initial design ambient air temperature limit of 75°F

- Provides smoke removal capability for the Class 1E electrical equipment rooms and battery rooms

The background noise level in the remote shutdown room does not exceed 65 dB(A) when the VBS is operating.

9.4.1.2.1 General Description

9.4.1.2.1.1 Main Control Room/Control Support Area HVAC Subsystem

The main control room/control support area HVAC subsystem serves the main control room and control support area with two 100 percent capacity supply air handling units, return/exhaust air fans, supplemental air filtration units, associated dampers, instrumentation and controls, and common ductwork. The supply air handling units and return/exhaust air fans are connected to common ductwork which distributes air to the main control room and CSA~~control support~~ areas. The main control room envelope consists of the main control room, shift manager's office, operation work area, toilet, and operations break room area. The CSA~~control support~~ area consists of the main control support area operations area, conference rooms, NRC room, computer rooms, shift turnover room, kitchen/rest area, and restrooms. The main control room and control support area toilets have separate exhaust fans.

NRC 050
NRC067
NRC 050
NRC067

Outside supply air is provided to the plant areas served by the main control room/control support area HVAC subsystem through an outside air intake duct that is protected by an intake enclosure located on the roof of the auxiliary building at elevation 153′-0″. The outside air intake duct is located more than 50 feet below and more than 100 feet laterally away from the plant vent discharge. The supply, return, and toilet exhaust are the only HVAC penetrations in the main control room envelope and include redundant safety-related seismic Category I isolation valves that are physically located within the main control room envelope. Redundant safety-related radiation monitors are located inside the main control room upstream of the supply air isolation valves. These monitors initiate operation of the nonsafety-related supplemental air filtration units on high gaseous radioactivity concentrations and isolate the main control room from the nuclear island nonradioactive ventilation system on high-high particulate or iodine radioactivity concentrations. See Section 11.5 for a description of the main control room supply air radiation monitors.

Both redundant trains of supplemental air filtration units and one train of the supply air handling unit are located in the main control room mechanical equipment room at elevation 135′-3″ in the auxiliary building. The other supply air handling unit subsystem is located in the main control room mechanical equipment room at elevation 135′-3″ in the annex building. The main control room toilet exhaust fan is located at elevation 135′-3″ in the auxiliary building. A humidifier is provided for each supply air handling unit. The supply air handling unit cooling coils are provided with chilled water from air-cooled chillers in the central chilled water system. See subsection 9.2.7 for the chilled water system description.

The main control room/control support area HVAC subsystem is designed so that smoke, hot gases, and fire suppressant will not migrate from one fire area to another to the extent that they could adversely affect safe shutdown capabilities, including operator actions. Fire or combination fire and smoke dampers are provided to isolate each fire area from adjacent fire areas during and following a fire in accordance with NFPA 90A (Reference 27) requirements. These combination smoke/fire dampers close in response to smoke detector signals or in response to the heat from a fire. See Appendix 9A for identification of fire areas.

No silicone sealant or other patching material is used on the main control room/control support area HVAC subsystem filters, housing, mounting frame, ducts or penetrations.

9.4.1.2.1.2 Class 1E Electrical Room HVAC Subsystem

The Class 1E electrical room HVAC subsystem serves the Class 1E electrical rooms, Class 1E instrumentation and control (I&C) rooms, Class 1E electrical penetration rooms, Class 1E battery rooms, spare Class 1E battery room, remote shutdown room, and reactor coolant pump trip switchgear rooms. The A and C electrical divisions, spare battery room, and reactor coolant pump trip switchgear rooms are served by one ventilation subsystem; the B and D electrical divisions and remote shutdown room are served by a second ventilation subsystem.

NRC 050
NRC 052
NRC 067
NRC 123
NRC 050
NRC 052
NRC 067
NRC 123

Each subsystem consists of two 100 percent capacity supply air handling units, return/exhaust air fans, associated dampers, controls and instrumentation, and common ductwork. The supply air handling units and return/exhaust air fans are connected to a common ductwork which distributes air to the Class 1E electrical rooms. The outside supply air intake enclosure for the A and C subsystem is common to the main control room/control support area~~technical support center~~ intake located on the roof of the auxiliary building at elevation 153′-0″. The outside supply air intake for the B and D subsystem is located separate from the main control room/control support area~~technical support center~~ air intake enclosure on the auxiliary building roof at elevation 153′-0″. The exhaust ducts from the battery rooms are connected to the turbine building vent to remove hydrogen gas generated by the batteries.

The HVAC equipment which serves the A and C electrical divisions is located in the nuclear island nonradioactive ventilation system main control room/A and C equipment room at elevation 135′-3″ in the auxiliary building. The HVAC equipment which serves the B and D division of Class 1E electrical equipment is located in the upper and lower nuclear island nonradioactive ventilation system B and D equipment rooms at elevation 117′-0″ and at elevation 135′-3″.

The supply air handling unit cooling coils are provided with chilled water from the air-cooled chillers in the central chilled water system. The two air handling units for each set of electrical divisions are provided with chilled water from redundant air-cooled chillers. Refer to subsection 9.2.7 for the chilled water system description.

Each subsystem for the Class 1E battery rooms is provided with two 100 percent capacity exhaust fans.

The Class 1E electrical room HVAC subsystem is designed so that smoke, hot gases, and fire suppressant does not migrate from one fire area to another to the extent that they could adversely affect safe shutdown capabilities, including operator actions. Separate ventilation subsystems are provided to serve the electrical division A and C equipment rooms and the electrical division B and D equipment rooms. The use of separate HVAC distribution subsystems for the redundant trains of electrical equipment prevents smoke and hot gases from migrating from one distribution division to the other through the ventilation system ducts. In addition, combination fire-smoke dampers are provided for Class 1E equipment rooms, including the remote shutdown room, to isolate each fire area and block the migration of smoke and hot gases to or from adjacent fire areas

supplemental air filtration subsystem dampers are constructed, qualified, and tested in accordance with ANSI/AMCA 500 or ASME AG-1 (Reference 36), Section DA.

Combination Fire/Smoke Dampers

Combination fire/smoke dampers are provided at duct penetrations through fire barriers to maintain the fire resistance ratings of the barriers. The combination fire/smoke dampers meet the design, leakage testing, and installation requirements of UL-555S (Reference 25).

Ductwork and Accessories

Ductwork, duct supports, and accessories are constructed of galvanized steel. Ductwork subject to fan shutoff pressures is structurally designed to accommodate fan shutoff pressures. Ductwork, supports, and accessories meet the design and construction requirements of SMACNA Industrial Rectangular and Round Duct Construction Standards (References 16 and 34) and SMACNA HVAC Duct Construction Standards – Metal and Flexible (Reference 17). The supplemental air filtration and main control room/control support area HVAC subsystem's ductwork, including the air filtration units and the portion of the ductwork located outside of the main control room envelope, that maintains integrity of the main control room/control support area pressure boundary during conditions of abnormal airborne radioactivity are designed in accordance with ASME AG-1 (Reference 36), Article SA-4500, to provide low leakage components necessary to maintain main control room/control support area habitability.

9.4.1.2.3 System Operation

9.4.1.2.3.1 Main Control Room/Control Support Area HVAC Subsystem

Normal Plant Operation

During normal plant operation, one of the two 100 percent capacity supply air handling units and return/exhaust air fans operates continuously. Outside makeup air supply to the supply air handling units is provided through an outside air intake duct. The outside airflow rate is automatically controlled to maintain the main control room and CSA~~control support~~ areas at a slightly positive pressure with respect to the surrounding areas and the outside environment.

NRC 050
NRC 067

The main control room/control support area supply air handling units are sized to provide cooling air for personnel comfort, equipment cooling, and to maintain the main control room emergency habitability passive heat sink below its initial ambient air design temperature. The temperature of the air supplied by each air handling unit is controlled by temperature sensors located in the main control room return air duct and in the computer room B return air duct to maintain the ambient air design temperature within its normal design temperature range by modulating the electric heat or chilled water cooling. Some spaces have convection heaters for temperature control.

The outside air is continuously monitored by smoke monitors located at the outside air intake plenum and the return air is monitored for smoke upstream of the supply air handling units. The supply air to the main control room is continuously monitored for airborne radioactivity while the supplemental air filtration units remain in a standby operating mode.

The standby supply air handling unit and corresponding return/exhaust fans are started automatically if one of the following conditions shuts down the operating unit:

- Airflow rate of the operating fan is above or below predetermined setpoints.
- Return air temperature is above or below predetermined setpoints.
- Differential pressure between the main control room and the surrounding areas and outside environment is above or below predetermined setpoints.
- Loss of electrical and/or control power to the operating unit.

Abnormal Plant Operation

Control actions are taken at two levels of radioactivity as detected in the main control room supply air duct. The first is "high" radioactivity based upon gaseous radioactivity instrumentation. The second is "high-high" radioactivity based upon either particulate or iodine radioactivity instruments.

NRC 050
NRC 067

If "high" gaseous radioactivity is detected in the main control room supply air duct and the main control room/control support area HVAC subsystem is operable, both supplemental air filtration units automatically start to pressurize the main control room and CSA~~control support~~ areas to at least 1/8 inch wg with respect to the surrounding areas and the outside environment using filtered makeup air. After the room is pressurized, one of the supplemental air filtration units is manually shut down. The normal outside air makeup duct and the main control room and control support area toilet exhaust duct isolation dampers close. The smoke/purge exhaust isolation dampers close, if open. The main control room/control support area supply air handling unit continues to provide cooling with recirculation air to maintain the main control room passive heat sink below its initial ambient air design temperature and maintains the main control room and CSA~~control support~~ areas within their design temperatures. The supplemental air filtration subsystem pressurizes the combined volume of the main control room and control support area concurrently with filtered outside air. A portion of the recirculation air from the main control room and control support area is also filtered for cleanup of airborne radioactivity. The main control room/control support area HVAC equipment and ductwork that form an extension of the main control room/control support area pressure boundary limit the overall infiltration (negative operating pressure) and exfiltration (positive operating pressure) rates to those values shown in Table 9.4.1-1. Based on these values, the system is designed to maintain personnel doses within allowable General Design Criteria (GDC) 19 limits during design basis accidents in both the main control room and the control support area.

NRC 050
NRC 067

If ac power is unavailable for more than 10 minutes or if "high-high" particulate or iodine radioactivity is detected in the main control room supply air duct, which would lead to exceeding GDC 19 operator dose limits, the protection and safety monitoring system automatically isolates the main control room from the normal main control room/control support area HVAC subsystem by closing the supply, return, and toilet exhaust isolation valves. Main control room habitability is maintained by the main control room emergency habitability system, which is discussed in Section 6.4.

NRC 050
NRC 067

The main control room and CSA~~control support~~ areas ventilation supply and return/exhaust ducts can be remotely or manually isolated from the main control room.

If a high concentration of smoke is detected in the outside air intake, an alarm is initiated in the main control room and the main control room/control support area HVAC subsystem is manually realigned to the recirculation mode by closing the outside air and toilet exhaust duct isolation valves. The main control room and control support area toilet exhaust fans are tripped upon closure of the isolation valves. The main control room/CSA~~control support~~ areas are not pressurized when operating in the recirculation mode. The main control room/control support area HVAC supply air subsystem continues to provide cooling, ventilation, and temperature control to maintain the emergency habitability passive heat sink below its initial ambient air design temperature and maintains the main control room and CSA~~control support~~ areas within their design temperatures.

NRC 050
NRC 067

NRC 050
NRC 067

In the event of a fire in the main control room or control support area, in response to heat from the fire or upon receipt of a smoke signal from an area smoke detector, the combination fire/smoke dampers close automatically to isolate the fire area. The subsystem continues to provide ventilation/cooling to the unaffected area and maintains the unaffected areas at a slightly positive pressure. The main control room/control support area HVAC subsystem can be manually realigned to the once-through ventilation mode to supply 100 percent outside air to the unaffected area. Realignment to the once-through ventilation mode minimizes the potential for migration of smoke or hot gas from the fire area to the unaffected area. Smoke and hot gases can be removed from the affected area by reopening the closed combination fire/smoke damper(s) from outside of the affected fire area during the once-through ventilation mode. In the once-through ventilation mode, the outside air intake damper to the air handling unit mixing plenum opens and the return air damper to the air handling unit closes to provide 100 percent outside air to the supply air handling unit. In this mode, the subsystem exhaust air isolation damper opens to exhaust the return air directly to the turbine building vent.

Power is supplied to the main control room/control support area HVAC subsystem by the plant ac electrical system. In the event of a loss of the plant ac electrical system, the main control room/control support area ventilation subsystem can be transferred to the onsite standby diesel generators. The convection heaters and duct heaters are not transferred to the onsite standby diesel generator.

When complete ac power is lost and the outside air is acceptable radiologically and chemically, MCR habitability is maintained by operating one of the two MCR ancillary fans to supply outside air to the MCR. It is expected that outside air will be acceptable within 72 hours following a radiological release. See subsection 6.4.2.2 for details. The outside air pathway to the ancillary fans is provided through the nonradioactive ventilation system air intake opening located on the roof, the mechanical room at floor elevation 135′-3″, and nonradioactive ventilation system supply duct. Warm air from the MCR is vented to the annex building through stairway S05, into the remote shutdown room and the clean access corridor at elevation 100′-0″. The ancillary fan capacity and air flow rate maintain the MCR environment near the daily average outdoor air temperature. The ancillary fans and flow path are located within the auxiliary building which is a Seismic Category I structure.

NRC 050
NRC 052
NRC 067
NRC 123

testing. Automatic controls are tested for actuation at the proper setpoints. Alarm functions are checked for operability. Air quality within the MCR/CSA~~TSC~~ environment is confirmed to be within the guidelines of Table 1 and Appendix C, Table C-1, of Reference 32 by analyzing air samples taken during preoperational testing.

The supplemental air filtration unit, HEPA filters, and charcoal adsorbers are tested in place in accordance with ASME N510 to verify that these components do not exceed a maximum allowable bypass leakage rate. Samples of charcoal adsorbent, used or new, are periodically tested to verify a minimum charcoal efficiency of 90 percent in accordance with Regulatory Guide 1.140 (Reference 30), except that test procedures and test frequency are conducted in accordance with ASME N510.

The ductwork for the supplemental air filtration subsystem and portions of the main control room/control support area HVAC subsystem that maintain the integrity of the main control room/control support area pressure boundary during conditions of abnormal airborne radioactivity are tested for leak tightness in accordance with ASME N510, Section 6. Testing for main control room/control support area inleakage during Main Control Room/Control Support Area HVAC Subsystem operation will be conducted in accordance with ASTM E741 (Reference 38). The remaining supply and return/exhaust ductwork is tested in place for leakage in accordance with SMACNA HVAC Duct Leakage Test Manual (Reference 18).

9.4.1.5 Instrumentation Applications

The nuclear island nonradioactive ventilation system is controlled by the plant control system except for the main control room isolation valves, which are controlled by the protection and safety monitoring system. Refer to subsection 7.1.1 for a description of the plant control and plant safety and monitoring systems. The instruments discussed below satisfy Table 4.2 of ASME N509 (Reference 2).

Temperature controllers are provided in the return air ducts to control the room air temperatures within the predetermined ranges. Temperature indication and alarms for the main control room return air, Class 1E electrical room return air, air handling unit supply air, supplemental filtration unit prefilter inlet air and charcoal adsorbers are provided to inform plant operators of abnormal temperature conditions.

Pressure differential indication and alarms are provided across each filter bank (except charcoal filters) to inform plant operators when filter changeout is necessary. Pressure differential indication and alarms are provided to control the main control room and monitor the control support area ambient room pressure differentials with respect to surrounding areas.

Radioactivity indication and alarms are provided to inform the main control room operators of gaseous, particulate, and iodine radioactivity concentrations in the main control room supply air duct. See Section 11.5 for a description of the main control room supply air duct radiation monitors and their actuation functions.

Smoke monitors are provided to detect smoke in the outside air intake duct to the main control room and the main control room and Class 1E electrical room return air ducts.

Airflow indication and alarms are provided to monitor operation of the supply and exhaust fans.

NRC 050
NRC 067

Relative humidity indication and alarms are provided to monitor the average relative humidity in the return air from the main control room/CSA~~control support~~ areas and the inlet air to the supplemental air filtration unit charcoal filters.

Status indication is provided to monitor fans, heaters and controlled dampers.

9.4.2 Annex/Auxiliary Buildings Nonradioactive HVAC System

The annex/auxiliary buildings nonradioactive HVAC system serves the nonradioactive personnel and equipment areas, electrical equipment rooms, clean corridors, the ancillary diesel generator room and demineralized water deoxygenating room in the annex building, and the main steam isolation valve compartments, reactor trip switchgear rooms, and piping and electrical penetration areas in the auxiliary building.

9.4.2.1 Design Basis

9.4.2.1.1 Safety Design Basis

The annex/auxiliary buildings nonradioactive HVAC system serves no safety-related function and therefore has no nuclear safety design basis. System equipment and ductwork located in the nuclear island whose failure could affect the operability of safety-related systems or components are designed to seismic Category II requirements. The remaining portion of the system is nonseismic.

9.4.2.1.2 Power Generation Design Basis

The annex/auxiliary buildings nonradioactive HVAC system provides the following specific functions:

- Provides conditioned air to maintain acceptable temperatures for equipment and personnel working in the area
- Provides suitable environmental conditions for equipment in the main steam isolation valve (MSIV) compartments
- Prevents the buildup of hydrogen in non-Class 1E battery rooms to less than 2 percent hydrogen by volume
- Removes vitiated air from locker, toilet, shower facilities, and rest rooms

9.4.12 Combined License Information

NRC 050
NRC 052
NRC 067
NRC 123

The Combined License applicants referencing the AP1000 certified design will implement a program to maintain compliance with ASME AG-1 (Reference 36), ASME N509 (Reference 2), ASME N510 (Reference 3) and Regulatory Guide 1.140 (Reference 30) for portions of the nuclear island nonradioactive ventilation system and the containment air filtration system identified in subsection 9.4.1 and 9.4.7. The Combined License applicant will also provide a description of the MCR/CSA~~TSC~~ HVAC subsystem's recirculation mode during toxic emergencies, and how the subsystem equipment isolates and operates, as applicable, consistent with the toxic issues, including conformance with Regulatory Guide 1.78 (Reference 37), to be addressed by the Combined License applicant as discussed in DCD subsection 6.4.7.

9.4.13 References

1. "Functional Criteria For Emergency Response Facilities," USNRC NUREG 0696.
2. "Nuclear Power Plant Air-Cleaning Units and Components," ASME N509-1989 (R1996).
3. "Testing of Nuclear Air-Cleaning Systems," ASME N510-1989.
4. "Laboratory Method of Testing Fans for Rating Purposes," ANSI/AMCA 210-85.
5. "Certified Ratings Program Air Performance," ANSI/AMCA 211-87.
6. "Reverberant Room Method of Testing Fans For Rating Purposes," ANSI/AMCA 300-85.
7. Gravimetric and Dust Spot Procedures for Testing Air-Cleaning Devices Used in General Ventilation for Removing Particulate Matter, ASHRAE 52.1, 1992.
8. "Test Performance of Air-Filter Units," UL-900, 1994.
9. "High-Efficiency, Particular, Air-Filter Units," UL-586, 1996.
10. "Heating and Cooling Equipment," UL 1995, 1995.
11. "Methods of Testing for Rating Forced Circulation Air Cooling and Air Heating Coils," ASHRAE 33-78.
12. "Forced-Circulation Air Cooling and Air Heating Coils," ANSI/ARI 410-91.
13. "Commercial and Industrial Humidifiers," ARI 640-96.
14. "Testing Methods for Louvers, Dampers, and Shutters," ANSI/AMCA 500-89.
15. "Fire Dampers," UL-555, 1999.
16. "Rectangular Industrial Duct Construction Standards," SMACNA, 1980.

9.5.2.5.3 Security Communications

NRC 054

Specific details for the security communication system are as discussed in separate security documents referred to in Section 13.6.

9.5.3 Plant Lighting System

The plant lighting system includes normal, emergency, panel, and security lighting. The normal lighting provides normal illumination during plant operating, maintenance, and test conditions. The emergency lighting provides illumination in areas where emergency operations are performed upon loss of normal lighting. The panel lighting in the control room is designed to provide the minimum illumination required at the safety panels. The security lighting system is described in separate security documents referred to in Section 13.6.

NRC 054

9.5.3.1 Design Basis

9.5.3.1.1 Safety Design Basis

- The normal and emergency lighting in the main control room and in the remote shutdown room is non-Class 1E. The emergency lighting in these plant areas is fed from a Class 1E uninterruptible power supply through two series fuses that are coordinated for isolation. The emergency lighting provides illumination for 72 hours upon loss of normal lighting. In other plant areas, the emergency lighting provides illumination for 8 hours.

- Lighting for the safety panels in the control room is provided by the panel lighting system. The power for the panel lighting is from the Divisions B and C Class 1E inverters through Class 1E distribution panels. The panel lighting circuits up to the lighting fixture are classified as associated and are routed in Seismic Category I raceways. The bulbs are not seismically qualified.

- During the 72 hour period following a loss of all ac power sources, lighting in the main control room can be provided as described in subsection 9.5.3.2.2.

9.5.3.1.2 Power Generation Design Basis

- The plant lighting system is non-Class 1E.

- The plant lighting system provides illumination levels for normal and emergency lighting as recommended in Illuminating Engineering Society Lighting Handbook (Reference 5).

- Mercury vapor lamps and mercury switches are not used in fuel handling areas.

- High-intensity discharge (HID) and fluorescent lamps are not used in the containment and fuel handling areas due to their mercury content. Incandescent lighting or other lighting not containing restricted materials is used in these areas.

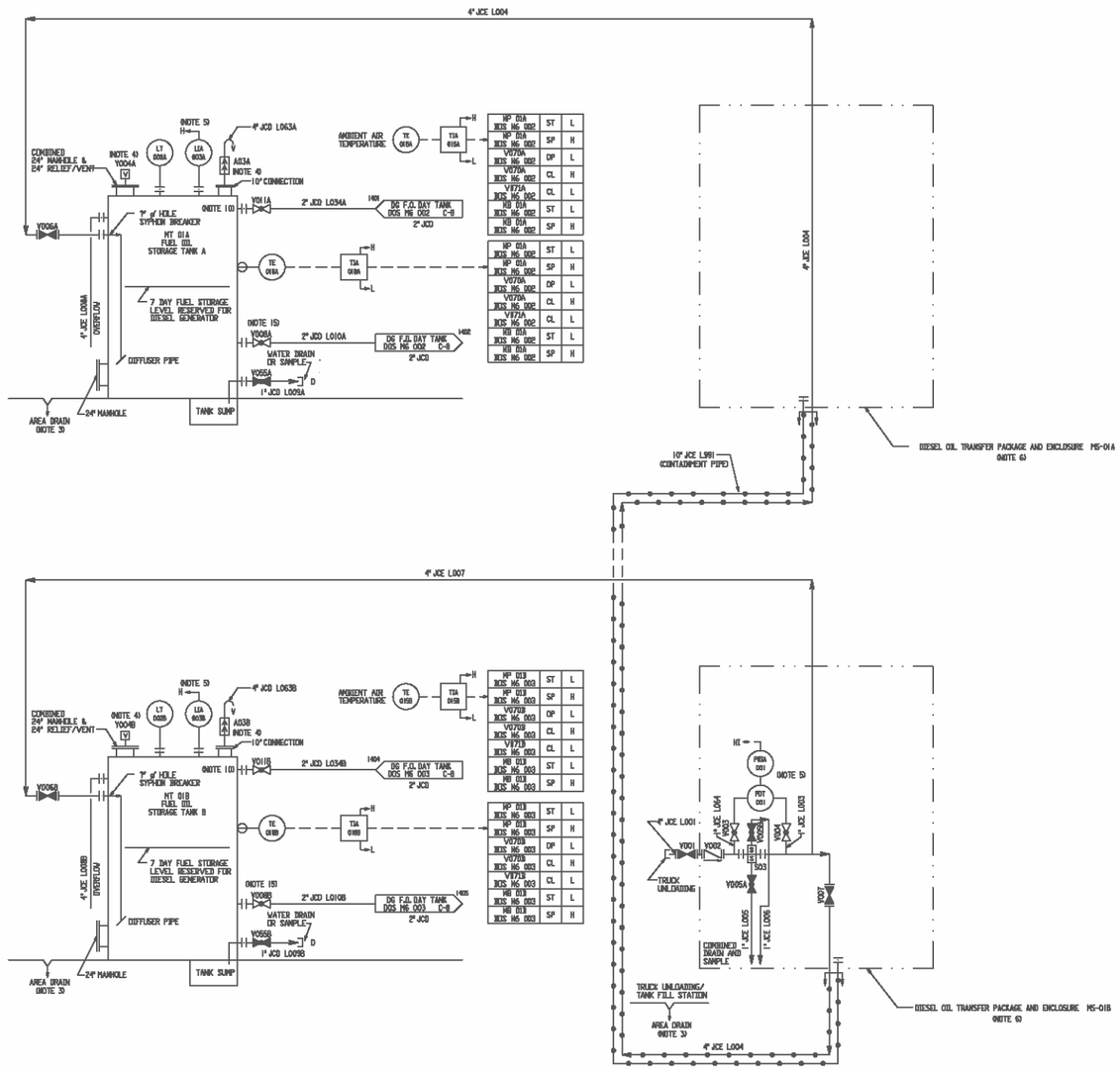

NOTES

1. THE SYSTEM LOCATER CODE "APP-DOS" HAS BEEN OMITTED FROM ALL COMPONENT NUMBERS. EXCEPT FOR EQUIPMENT, THE COMPONENT TYPE CODE HAS ALSO BEEN OMITTED.
2. YARD BURIED PIPE CONTAINING FUEL OIL SHALL HAVE A CONTAINMENT PIPE PER EPA REQUIREMENTS, DESIGNED FOR THE HEAVIEST WHEEL LOAD RESULTING FROM THE STEAM GENERATOR REMOVAL/REPLACEMENT. MULTIPLE FUEL OIL PIPELINES ARE PERMITTED WITHIN ANY CONTAINMENT PIPE WHERE ROUTING PERMITS. CONTAINMENT PIPING SHALL BE CATHODIC PROTECTED, COATED AND WRAPPED STEEL OR A PROPRIETARY VENDOR DESIGNED PLASTIC SYSTEM ROUTED AS SHOWN FOR THE STEEL CONTAINMENT.
3. SEE PLUS DWG NO1 APP WWS M6 001 FOR RUNOFF DRAIN OR FLOOR DRAIN TO WWS SYSTEM.
4. FLAME ARRESTOR/ATMOSPHERIC VENT AND EMERGENCY PRESSURE RELIEF COVER VENT MANHOLE ARRANGEMENT TO MEET NFPA 30 CODE.
5. LOCAL AUDIBLE ALARM AT TRUCK FILL STATION.
6. DIESEL OIL TRANSFER PACKAGE AND ENCLOSURE PROVIDED WITH ELECTRIC HEATER TO MAINTAIN MINIMUM 50°F TEMPERATURE DURING DESIGN WINTER CONDITIONS.
7. FLAME ARRESTOR 10 FEET ABOVE FUEL OIL STORAGE TANK MAXIMUM LEVEL.
8. ELECTRIC 240V EXTERIOR PAD HEATER AND INSULATION ON TANK BOTTOM ONLY. ELECTRIC HEATING SYSTEM OPERATES ONLY WHEN AMBIENT IS 20°F OR LESS.
9. FOR DIESEL ENGINE FUEL OIL SUPPLY AND RETURN SEE DWG APP ZIS M6 001 AND APP ZIS M6 002 RESPECTIVELY.
10. LOCATE CONNECTION ABOVE MAXIMUM LIQUID STORAGE LEVEL.
11. ALL NONUNDERGROUND PIPING, VALVES, SPECIALTIES, INSTRUMENTS AND EQUIPMENT (EXCLUDING OPEN ENDED ATMOSPHERIC VENT OR DRAIN PIPE) TO BE INSULATED FOR HEAT RETENTION AND/OR FREEZE PROTECTION.
12. BACKUP TO LT 016A.
13. LOW TANK LEVEL OVERRIDES LOW TEMPERATURE.
14. REMAINS CLOSED IN RECIRCULATION MODE UNLESS DAY TANK LEVEL IS LOW.
15. PIPE CONNECTION AT TANK 6" ABOVE TANK BOTTOM.
16. DELETED
17. FOR DIESEL ENGINE FUEL OIL SUPPLY AND RETURN LINES SEE DWG APP ECS M6 001. SUPPLY AND RETURN LINES ARE INSULATED.
18. TWO 1.25 KW EXTERIOR ELECTRIC PAD HEATERS AND TANK INSULATION ARE PROVIDED ON TANK. ELECTRIC HEATING SYSTEM OPERATES ONLY WHEN AMBIENT IS 20°F OR LESS.
19. TANK LEVEL MEASURED BY MEANS OF DIP STICK.
20. COUPLING ADAPTERS PROVIDED WITH DIESEL ENGINES FOR CONNECTION TO FIELD PIPING.

REFERENCES

A. AP1000 COMPONENT NUMBERING PROCEDURE APP GW GMP 006
B. PIPING AND INSTRUMENTATION DIAGRAM LEGEND DRAWING APP GW M6 001, 002 AND 003.

Figure 9.5.4-1 (Sheet 1 of 3)

NRC 072

Standby Diesel ~~and Auxiliary Boiler~~ Fuel Oil System Piping and Instrumentation Diagram
(REF) DOS 001

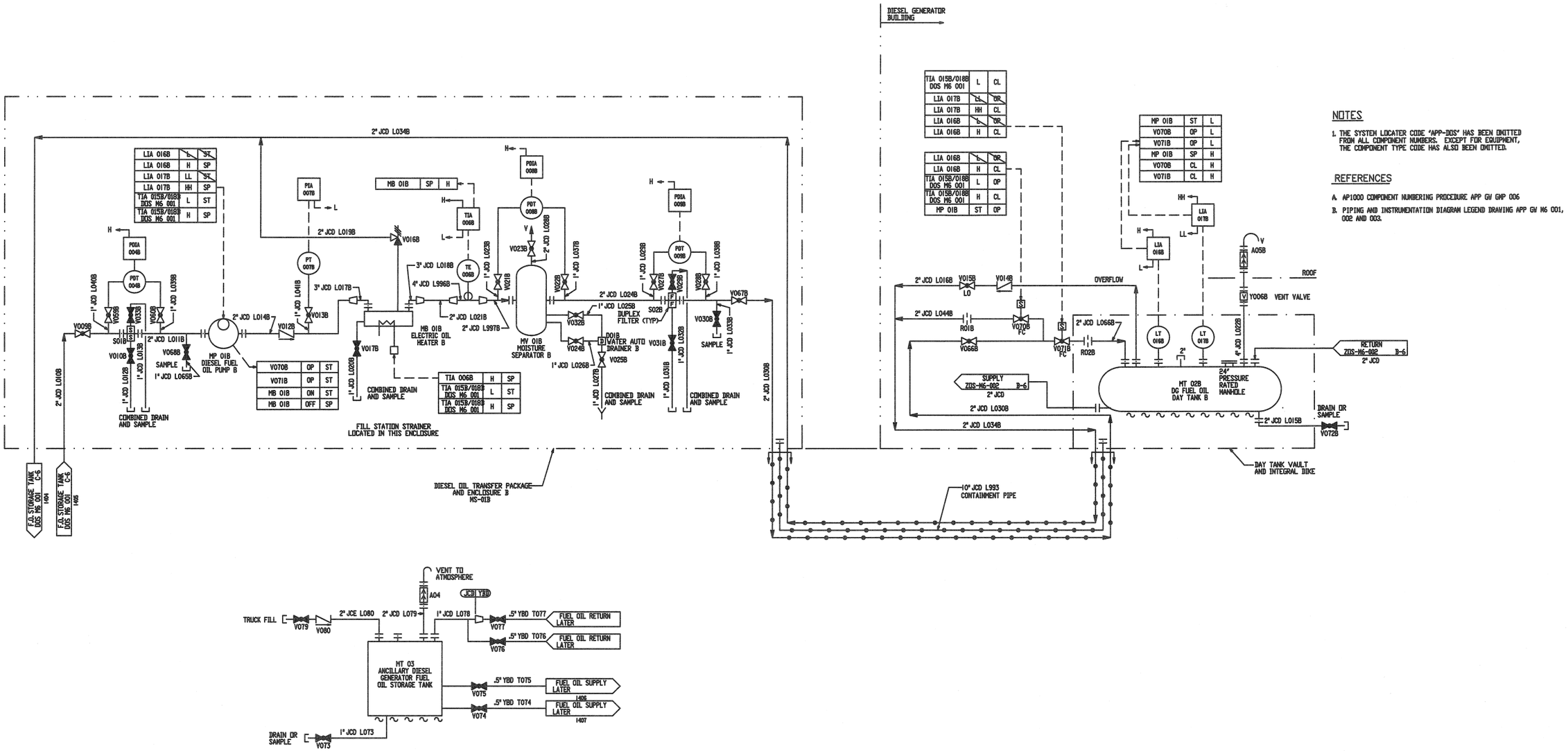

Figure 9.5.4-1 (Sheet 2 of 3)

NRC 072

Standby Diesel ~~and Auxiliary Boiler~~ Fuel Oil System
Piping and Instrumentation Diagram
(REF) DOS-002

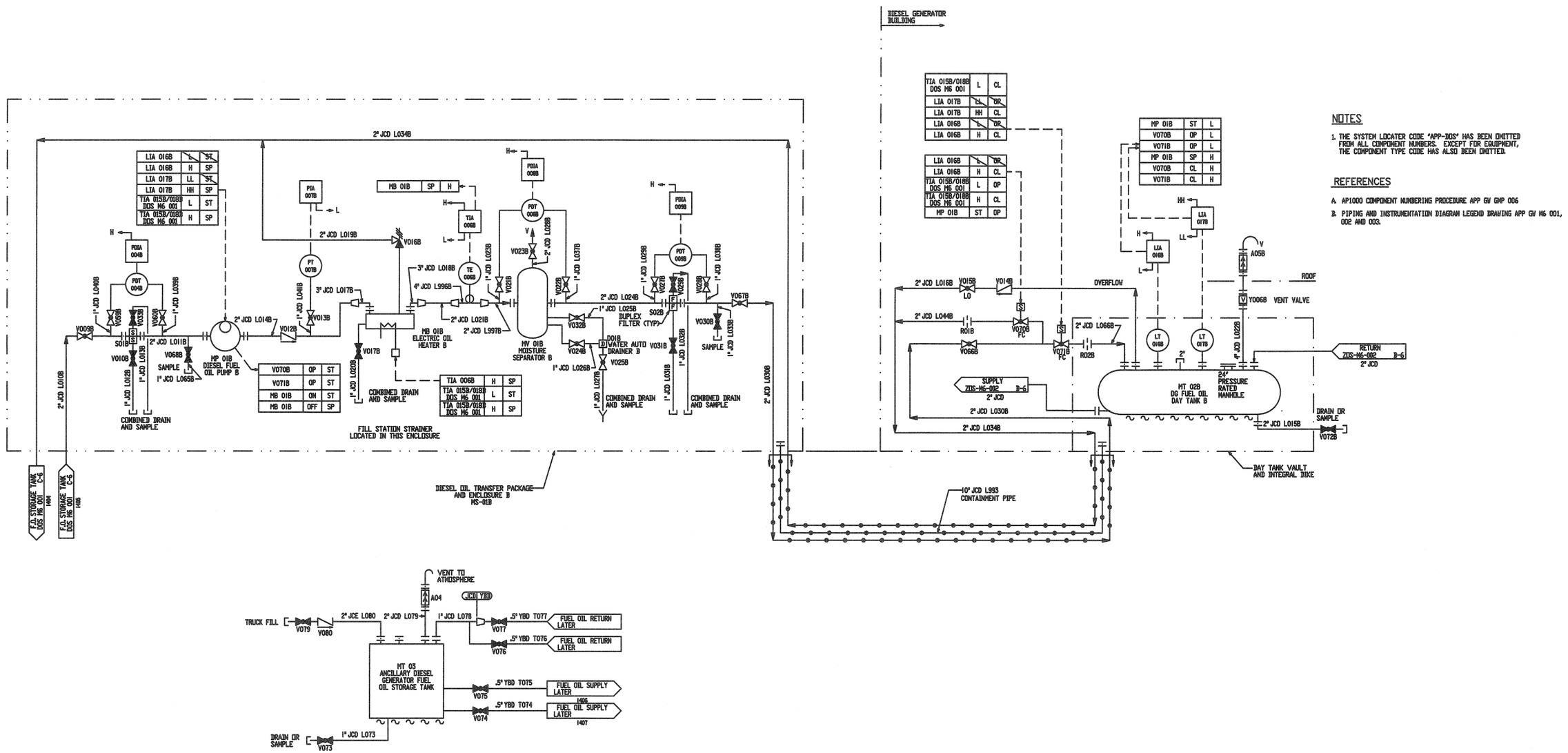

Figure 9.5.4-1 (Sheet 3 of 3)

NRC 072

Standby Diesel ~~and Auxiliary Boiler~~ Fuel Oil System
Piping and Instrumentation Diagram
(REF) DOS-003

Fire Protection Adequacy Evaluation

A fire in this fire area is detected by a fire detector which produces an audible alarm locally and both visual and audible alarms in the main control room and the security central alarm station. The fire is extinguished manually using hose streams or portable extinguishers.

Combustible materials in this fire area are listed in Table 9A-3, and primarily consist of cable insulation and paper. There are concentrations of cable under the floor and within the control console. There are concentrations of paper, most of which is contained within metal filing cabinets or bookcases. This is a light hazard fire area and the rate of fire growth is expected to be slow. Three-hour fire barriers provide adequate separation from adjacent fire areas and the fire is contained within the fire area.

The ventilation system does not contribute to the spread of the fire or smoke as described in the Smoke Control Features section above.

Fire Protection System Integrity

An evaluation of the consequences of inadvertent operation of an automatic suppression system is not required because there are no such systems in this fire area. An evaluation of the consequences of a break in a fire protection line is not required because no such lines pass through or terminate in this fire area.

Safe Shutdown Evaluation

Table 9A-2 lists the safe shutdown components located in this fire area. The remote shutdown room contains circuits from the four Class 1E electrical divisions. Electrical separation to and inside the remote shutdown room is maintained per industry standards. The remote shutdown room is an alternate to the main control room. The transfer of operations to the remote shutdown workstation is controlled by a transfer switch set located in the remote shutdown workstation area. In the unlikely event that the fire damages the transfer switch set, causing transfer of control from the main control room to the remote shutdown workstation, the operator restores control to the main control room by de-energizing fire area 1202 AF 05 (stair S05). Safe shutdown is achieved using the safe shutdown components listed in Table 9A-2.

NRC 099

Most remote shutdown workstation controls use soft-controls which communicate over multiplexed data channels. Fire-induced spurious actuation from these multiplexed soft controls is not assumed. Fire-induced actuations from the dedicated switches in this area are prevented during normal operation by the transfer switch logic, which only enables operation from the remote shutdown workstation dedicated switches when control is transferred to the remote shutdown workstation.

Neither a fire nor fire suppression activities in this fire area affect the safe shutdown capability of components located in adjacent fire areas.

- Hose station(s)
- Portable fire extinguishers

Smoke Control Features

NRC 050
NRC 052
NRC 123

Combination fire-smoke dampers in the main control room/control support area~~technical support center~~ HVAC subsystem of the NI non-radioactive ventilation system (VBS) close automatically upon detection of smoke or on high temperature to isolate this fire area. The balance of this and other VBS subsystems continue to provide ventilation to the unaffected fire areas. This subsystem may be manually realigned to the once-through smoke exhaust ventilation mode to minimize the potential migration of smoke. If the exhaust fire-smoke damper for this fire area is operable, the damper may be reopened to further reduce the migration of smoke. After the fire, smoke is removed from this fire area by reopening the fire dampers and operating the ventilation system in the once-through ventilation mode.

Fire Protection Adequacy Evaluation

A fire in this fire area is detected by a fire detector which produces an audible alarm locally and both visual and audible alarms in the main control room and the security central alarm station. The fire is extinguished manually using hose streams or portable extinguishers.

Combustible materials in this fire area are listed in Table 9A-3 and primarily consist of electrical cable insulation and ordinary combustible material such as wood and paper. Combustibles are relatively uniformly distributed throughout the fire area. This is a light hazard fire area and the rate of fire growth is expected to be slow. Minimum two-hour fire barriers are provided and the building exterior wall is not rated. Fire zones within this fire area are separated by walls as shown in Figure 9A-4. The corridor walls of fire zone 4041 AF 40410 are rated for one-hour in accordance with Uniform Building Code requirements for exit corridors.

The ventilation system does not contribute to the spread of the fire or smoke as described in the Smoke Control Features section above.

9A.3.4.17 Fire Area 4041 AF 02

This fire area is comprised of the following room(s):

Room No.	
40400	Corridor
40401	Restroom

There are no systems in this fire area which normally contain radioactive material.

Fire Detection and Suppression Features

- Fire detectors
- Hose station(s)
- Portable fire extinguishers

Chapter 10

10.2 Turbine-Generator

The function of the turbine-generator is to convert thermal energy into electric power.

10.2.1 Design Basis

10.2.1.1 Safety Design Basis

The turbine-generator serves no safety-related function and therefore has no nuclear safety design basis.

10.2.1.2 Power Generation Design Basis

The following is a list of the principal design features:

- The turbine-generator is designed for baseload operation and for load follow operation.
- The main turbine system (MTS) is designed for electric power production consistent with the capability of the reactor and the reactor coolant system.
- The turbine-generator is designed to trip automatically under abnormal conditions.
- The system is designed to provide proper drainage of related piping and components to prevent water induction into the main turbine.
- The main turbine system satisfies the recommendations of Nuclear Regulatory Commission Branch Technical Position ASB 3-1 as related to breaks in high-energy and moderate-energy piping systems outside containment. The main turbine system is considered a high-energy system.
- The system provides extraction steam for seven~~six~~ stages of regenerative feedwater heating. NRC 071

10.2.2 System Description

The turbine-generator is designated as a TC6F 52-inch last-stage blade unit consisting of turbines, a generator, external moisture separator/reheaters, controls, and auxiliary subsystems. (See Figure 10.2-1.) The major design parameters of the turbine-generator and auxiliaries are presented in Table 10.2-1. The piping and instrumentation diagram containing the stop, control, intercept, and reheat valves is shown in Figure 10.3.2-2.

The turbine-generator and associated piping, valves, and controls are located completely within the turbine building. There are no safety-related systems or components located within the turbine building. The probability of destructive overspeed condition and missile generation, assuming the recommended inspection and test frequencies, is less than 1×10^{-5} per year. In addition, orientation of the turbine-generator is such that a high-energy missile would be directed at a 90 degree angle away from safety-related structures, systems, or components. Failure of turbine-generator equipment does not preclude safe shutdown of the reactor. The

Auxiliary steam from the auxiliary steam supply system (see subsection 10.4.10) is supplied to the deaerator during recirculation conditions and maintains the pressure in the tank above atmospheric. The steam heats the condensate during cleanup and recirculation for liberation of noncondensables. Auxiliary steam is also automatically supplied to the deaerator following turbine trip to assist in maintaining deaerator pressure above atmospheric.

The shells of the deaerator and the deaerator storage tank are carbon steel. Most of the internals of the deaerator, including the tray assemblies, vent condenser, and spray valves, are stainless steel.

A high level dump line and control valve provide overflow protection to the deaerator storage tank. During high level conditions, water from the deaerator storage tank is drained to the main condenser.

NRC 070

High-Pressure Feedwater Heaters

The main feedwater pumps discharge into a parallel string of No. 6 and No. 7 high-pressure feedwater heaters. These heaters are shell and tube heat exchangers with integral drain coolers. Heated feedwater flows through the tubes and extraction steam condenses in the shell. The No. 6 and No. 7 heaters drain into low-pressure heater No. 5 (deaerator).

A drain line from each heater allows direct discharge of the heater drains to the condenser in the event the normal drain path is not available or flooding occurs in the heater.

The high-pressure feedwater heater shells are carbon steel, and the tubes are stainless steel.

Feedwater Booster Pumps

The feedwater booster pumps are horizontal, centrifugal pumps located upstream of the main feedwater pumps. Each feedwater booster pump takes suction from the deaerator storage tank and pumps forward to its associated main feedwater pump. An electric motor drives both the booster pump and the main feedwater pump. The booster pump is driven by one end of the motor shaft and the main pump is driven by the other end through a mechanical speed increaser. The booster pump, operating at a lower speed than the main feedwater pump, boosts the pressure of feedwater from the deaerator to meet the net positive suction head requirements of the main feedwater pump.

Main Feedwater Pumps

The three main feedwater pumps operate in parallel and take suction from the associated feedwater booster pumps. The combined discharge from the main feedwater pumps is supplied to the No. 6 high-pressure feedwater heater, the No. 7 high-pressure feedwater heater, and then to the steam generator system. Each main feedwater pump is a horizontal, centrifugal pump driven, through a mechanical speed increaser, by the motor that drives the associated feedwater booster pump.

Isolation valves allow each of the booster/main feedwater pumps to be individually removed from service while continuing power operations at reduced capacity.

NRC 066

room to achieve the desired flow rate. Feedwater is recirculated from downstream of the No. 7~~6~~ feedwater heaters to the main condenser for cleanup and deaeration of the condensate and feedwater inventory.

10.4.7.2.3.1.4 Plant Heatup

The condenser hotwell makeup and overflow valves are enabled and function automatically during the plant heatup cycle to maintain condensate inventory. Condensate is returned to the condensate storage tank as volume expansion occurs, and makeup occurs as needed for system losses.

During heatup, the main condenser is available to accept turbine bypass steam from the main steam system, as well as various drains, vents, and condensate/feedwater recirculation flow. Noncondensable gases are removed in the air removal sections of the main condenser and through the deaerator vents. Control and monitoring of water quality and chemistry are accomplished by operation of the condensate polishing equipment, chemical feed system, and secondary sampling equipment as required.

The steam generators are filled, as required, either by the startup feedwater pumps using water from the condensate storage tank, or alternatively by a booster/main feedwater pump using water from the deaerator storage tank and supplied through cross connect piping to the startup feedwater control valves. The steam generators are drained, as required, through the steam generator blowdown system.

During the initial stages of plant heatup, one condensate pump operates as necessary to maintain level in the deaerator storage tank. Either one or both startup feedwater pumps, or one booster/main feedwater pump, is in operation when feeding water to the steam generators. The feedwater pumps in use operate on minimum flow recirculation as necessary while maintaining the water level of the steam generators.

Feedwater is controlled by the startup feedwater control valves (SFCVs) which are operated either manually from the control room or automatically in accordance with steam generator level demand. Condensate flow to the steam generator blowdown heat exchangers is controlled during plant heatup to obtain the necessary cooling to the blowdown stream. Any excess level in the deaerator storage tank is automatically drained to the main condenser through the deaerator high level dump flow path.

10.4.7.2.3.2 Power Operation

One operating condensate pump supplies sufficient condensate flow to the deaerator during initial power operation and at low-power levels. As power escalates, a second condensate pump is started prior to exceeding approximately 50-percent, full-load condensate flow. The third condensate pump is in standby.

The condensate regulating valves to the deaerator automatically maintain the level of the deaerator storage tank. If condensate flow to the deaerator drops below the minimum required flow for operation of the gland steam condenser or the condensate pumps, the hotwell recirculation valve to the condenser opens to provide the minimum flow.

Chapter 11

mixed liquid waste. The useful storage volume in the packaged waste storage room is approximately 3900 cubic feet (10 feet deep, 30 feet long, and 13 feet high), which accommodates more than one full offsite waste shipment using a tractor-trailer truck. The packaged waste storage room provides storage for more than two years at the expected rate of generation and more than a year at the maximum rate of generation. One four-drum containment pallet provides more than 8 months of storage capacity for the liquid mixed wastes and the volume reduced liquid chemical wastes at the expected rate of generation and more than 4 months at the maximum rate.

A conservative estimate of solid wet waste includes blowdown material based on continuous operation of the steam generator blowdown purification system, with leakage from the primary to secondary system~~cycles~~. The volume of radioactively contaminated material from this source is estimated to be 540 cubic feet per year. Provisions for processing and disposal of radioactive steam generator blowdown resins and membranes are described in subsection 10.4.8. Note that, although included here for conservatism, this volume of contaminated resin will be removed from the plant within the contaminated electrodeionization unit and not stored as wet waste. NRC 122

The condensate polishing system includes mixed bed ion exchanger vessels for purification of the condensate as described in subsection 10.4.6. Should the resins become radioactive, the resins are transferred from the condensate polishing vessel directly to a temporary processing unit or to the temporary processing unit via the spent resin tank. The processing unit, located outside of the turbine building, dewaters and processes the resins as required for offsite disposal. Radioactive condensate polishing resin will have very low activity. It will be disposed in containers as permitted by DOT regulations. After packaging, the resins may be stored in the radwaste building. Based on a typical condensate polishing system operation of 30 days per refueling cycle with leakage from the primary system to the secondary system, the volume of radioactively contaminated resin is estimated to be 206 cubic feet per year (one 309 cubic foot bed per refueling cycle). Normal disposal of nonradioactive condensate polishing system resins is described in subsection 10.4.6.

The parameters used to calculate the activities of the steam generator blowdown solid waste and condensate polishing resins are given in Table 11.4-1. Based on the above volumes, the disposal volume is estimated to be 939 cubic feet per year. The expected and maximum activities of the resins as generated are given in Tables 11.4-6 and 11.4-7, respectively. The expected and maximum activities of resins as shipped, based on 90 days decay prior to shipment, are given in Tables 11.4-8 and 11.4-9, respectively.

11.4.2.2 Component Description

The seismic design classification and safety classification for the solid waste management system components are listed in Section 3.2. The components listed are located in the Seismic Category I Nuclear Island. Table 11.4-10 lists the solid waste management system equipment design parameters. The following subsections provide a functional description of the major system components.

IV.3 Portable or mobile systems will be located in either the rail car bay of the auxiliary building or in the mobile systems facility in the radwaste building. The spent resin waste container fill station or the shipping cask in the auxiliary building collects spillage of spent resin during waste container filling operations. The radwaste and auxiliary buildings contain and drain spillage to the liquid radwaste system via the radioactive waste drain system as described in subsection 1.2.7 and Section 11.2. Portable or mobile systems will, when required, have their own HEPA filtered exhaust ventilation system. HEPA filtered exhaust is required when airborne radioactivity would exceed 10 CFR 20 derived air concentration limits for radiation workers. The mobile systems facility has connections on the exhaust ventilation ducts for connecting exhaust duct from mobile or portable processing systems to the building's exhaust ventilation system.

IV.4 Although the seismic criteria of Regulatory Guide 1.143 are not applicable to structures housing mobile or portable solid radwaste systems, the portable equipment used for spent resin container filling and dewatering and high-activity filter cartridge packaging will be housed within the Seismic Category I auxiliary building. The radwaste building, which provides shelter for mobile or portable radwaste systems, is non-seismic in accordance with Branch Technical Position ETSB 11-3.

11.4.2.4.2 Central Radwaste Processing Facility

NRC 116

NRC 116

As an alternative to the mobile or portable processes for lower-activity wastes ~~(generally wastes reading below 200 mR/hr)~~, the wastes may be sent to a licensed central radwaste processing facility for processing and disposal. This option requires minimal onsite processing to remove ~~hazardous~~ radioactive materials from the waste streams. The wastes are loaded into a cargo container. The mobile systems facility includes a designated laydown area, and the mobile systems facility crane may be used to handle a cargo container.

11.4.2.5 Facilities

11.4.2.5.1 Auxiliary Building

Resin and filtration media transfer lines from the various ion exchangers are routed to the spent resin tanks on elevation 100′ - 0″ in the southwest corner of the auxiliary building. The spent resin system pumps, valves, and piping are located in shielded rooms near the spent resin tanks.

Liquid radwaste system transfer lines to and from the radwaste building are routed to the south wall of the auxiliary building where they penetrate and enter into a shielded pipe pit in the base mat of the radwaste building.

Accessways in the auxiliary building are used to move the filter transfer casks. This includes filter transfer cask handling from the containment, where the chemical and volume control filters are located, to the auxiliary building rail car bay, where the filter cartridges are stored and subsequently packaged using mobile equipment. These accessways are also used to move dry active waste from various collection locations to the radwaste building. Enclosed access is provided between the auxiliary building and the radwaste building on elevation 100′-0″ (grade level).

11.5.4 Process and Airborne Monitoring and Sampling

Radiation monitors are used to initiate automatic closure of isolation valves and dampers in liquid and gaseous process systems as described in subsection 11.5.2.3. These radiation monitors address the requirement of General Design Criterion 60 to suitably control the release of radioactive materials in gaseous and liquid effluents.

Radiation monitors are used in the radioactive waste processing systems as described in subsection 11.5.2.3. These radiation monitors address the requirement of General Design Criterion 63 to monitor radiation levels in radioactive waste systems.

Radiation monitors are used in the ventilation systems as described in subsection 11.5.2.3 to ensure that airborne concentrations within the plant are within the limits of 10 CFR 20.

11.5.5 Post-Accident Radiation Monitoring

The radiation monitors listed below meet the guidelines of Regulatory Guide 1.97 and are described in subsections 11.5.2.3 and 11.5.6.2. For further Regulatory Guide 1.97 information refer to Appendix 1~~7~~A and Section 7.5.

NRC 080

- Main steam line radiation monitors
- Steam generator blowdown radiation monitor
- Main control room supply air duct radiation monitors
- Plant vent radiation monitor
- Turbine island vent discharge radiation monitor
- Containment high range radiation monitors
- Primary sampling room area monitor
- ~~Control support~~CSA area monitor

NRC 050

The post-accident sampling system is described in subsection 9.3.3 and is used to obtain samples for onsite laboratory analysis, including radioisotopic analysis, after a postulated accident.

11.5.6 Area Radiation Monitors

The area radiation monitors are provided to supplement the personnel and area radiation survey provisions of the AP1000 health physics program described in Section 12.5 and to comply with the personnel radiation protection guidelines of 10 CFR 20, 10 CFR 50, and 10 CFR 70; and Regulatory Guides 1.97, 8.2, and 8.8.

The monitor is an extended range monitor that uses a gamma-sensitive ion chamber. The monitor range and principal isotopes are listed in Table 11.5-2.

NRC 050

Control Support Area (CSA) Area Monitor

NRC 050

The control support area is the location from which engineering support will be provided to the operators following a postulated accident. The CSA~~control support~~ area radiation monitor (RMS-JE-RE016) is located so that its readout is representative of the radiation to which the support personnel are exposed. A local readout, an audible alarm, and visual alarms are provided locally to alert personnel to increasing exposure rates. A local readout, an audible alarm, and visual alarms are provided outside of the room and are visible to personnel prior to entry. Indication and alarms are also provided in the main control room.

The monitor is a normal range monitor that uses a gamma-sensitive Geiger-Mueller tube. The monitor range and principal isotopes are listed in Table 11.5-2.

11.5.6.3 Normal Range Area Monitors

Normal range area radiation monitors are located in accordance with the location criteria given in subsection 11.5.6.1. A local readout, an audible alarm, and visual alarms are provided in each monitored area to alert operating personnel to increasing exposure rates. Visual alarms are provided outside of each monitored area so that they are visible to operating personnel prior to entry. Indication and alarms are also provided in the main control room.

The monitor detectors are gamma-sensitive Geiger-Mueller tubes. The monitors and their ranges are listed in Table 11.5-2.

11.5.6.4 Fuel Handling Area Criticality Monitors

Criticality monitoring of the fuel handling and storage areas is performed in accordance with 10 CFR 70.24 by radiation monitors RMS-JE-RE012 and RMS-JE-RE020. The area radiation monitoring is augmented during fuel handling operations by a portable radiation monitor on the machine handling fuel. The fuel handling area radiation monitor parameters are provided in Table 11.5-2.

The permanent criticality monitors are physically separated by a large distance and have overlapping fields of view. Each detector's field of view can detect radiation from a fuel criticality accident in the areas occupied by personnel where fuel is stored and handled. The criticality monitors do not have a direct line of sight in the new fuel storage pit because the arrangement of new fuel prevents accidental criticality. The alarm set points of the radiation monitors are below the sensitivity needed to detect the 10 CFR 70.24 specified 20 rads/minute dose rate in soft tissue of combined gamma and neutron radiation from an unshielded source at two meters distance. A criticality excursion will produce an audible local alarm and an alarm in the plant MCR.

Table 11.5-2

AREA RADIATION MONITOR DETECTOR PARAMETERS

Detector	Type	Service	Nominal Range
PXS-JE-RE160	γ	Containment High Range (Note 3)	1.0E-0 to 1.0E+7 R/hr
PXS-JE-RE161	γ	Containment High Range (Note 3)	1.0E-0 to 1.0E+7 R/hr
PXS-JE-RE162	γ	Containment High Range (Note 3)	1.0E-0 to 1.0E+7 R/hr
PXS-JE-RE163	γ	Containment High Range (Note 3)	1.0E-0 to 1.0E+7 R/hr
RMS-JE-RE008	γ	Primary Sampling Room	1.0E-1 to 1.0E+7 mR/hr
RMS-JE-RE009	γ	Containment Area - Personnel Hatch	1.0E-1 to 1.0E+4 mR/hr (Note 1)
RMS-JE-RE010	γ	Main Control Room	1.0E-1 to 1.0E+4 mR/hr
RMS-JE-RE011	γ	Chemistry Laboratory Area	1.0E-1 to 1.0E+4 mR/hr
RMS-JE-RE012	γ	Fuel Handling Area	1.0E-1 to 1.0E+4 mR/hr (Note 2)
RMS-JE-RE013	γ	Rail Car Bay Area/Auxiliary Bldg. Loading Bay (Note 4)	1.0E-1 to 1.0E+4 mR/hr
RMS-JE-RE014	γ	Liquid and Gaseous Radwaste Area	1.0E-1 to 1.0E+4 mR/hr
RMS-JE-RE016	γ	~~Control Support~~ CSA Area	1.0E-1 to 1.0E+4 mR/hr
RMS-JE-RE017	γ	Radwaste Bldg. Mobile Systems Facility (Note 4)	1.0E-1 to 1.0E+4 mR/hr
RMS-JE-RE018	γ	Hot Machine Shop	1.0E-1 to 1.0E+4 mR/hr
RMS-JE-RE019	γ	Annex Staging & Storage Area	1.0E-1 to 1.0E+4 mR.hr
RMS-JE-RE020	γ	Fuel Handling Area	1.0E-1 to 1.0E+4 mR/hr (Note 2)

NRC 123

Notes:

1. Radiation levels are monitored by the permanent containment area radiation monitor and by a portable bridge monitor during refueling operations. The containment area radiation monitor is located to best measure the increase in exposure rates for this area and to provide an alarm locally and in the main control room.
2. Radiation levels are monitored by the permanent fuel handling area radiation monitors and by a portable bridge monitor during fuel handling operations. The fuel handling area radiation monitors are located to best measure the increase in exposure rates for this area and to provide an alarm locally and in the main control room.
3. Safety-related
4. Monitors areas used for storage of wet wastes (including processed and packaged spent resins) and dry wastes.

Chapter 12

LIST OF TABLES

Table No.	Title	Page
12.2-1	Radiation Flux at The Primary Shield Concrete	12.2-9
12.2-2	Core Average Gamma Ray Source Strengths at Various Times After Shutdown (Sheets 1 – 2)	12.2-10
12.2-3	Reactor Coolant Nitrogen-16 Activity	12.2-12
12.2-4	Pressurizer Nitrogen-16 Source Strengths	12.2-13
12.2-5	Pressurizer Liquid and Steam Phase Source Strengths and Specific Activity (Sheets 1 – 4)	12.2-14
12.2-6	Isotopic Composition and Specific Activity of Typical Out-of-Core Crud Deposits	12.2-18
12.2-7	Chemical and Volume Control System Components Source Strengths and Specific Activity (Sheets 1 – 8)	12.2-19
12.2-8	Spent Fuel Pool Cooling System Component Source Strengths and Specific Activity	12.2-27
12.2-9	Liquid Radwaste System Component Source Terms (Sheets 1 – 7)	12.2-28
12.2-10	Gaseous Radwaste System Component Source Terms (Sheets 1 – 4)	12.2-35
12.2-11	Spent Demineralizer Resin Source Strengths and Specific Activities (Sheets 1 – 2)	12.2-39
12.2-12	Normal Residual Heat Removal System Source Strengths and Specific Activities (Sheets 1 – 2)	12.2-41
12.2-13	Core Average and Spent Fuel Neutron Source Strengths at Various Times After Shutdown	12.2-43
12.2-14	Spent Fuel Gamma Ray Source Strengths (Sheets 1 – 2)	12.2-44
12.2-15	Irradiated Silver-Indium-Cadmium Control Rod Source Strengths	12.2-46
12.2-16	Irradiated SB-BE Secondary Source Rod Gamma Ray Source Strengths	12.2-47
12.2-17	Irradiated SB-BE Secondary Source Rod Neutron Source Strengths	12.2-48
NRC 086 12.2-18	Irradiated ~~Type 304~~ Stainless Steel Source Strengths (0.12 Weight Percent Cobalt)	12.2-49
12.2-19	Irradiated Flux Thimble Source Strengths	12.2-50
12.2-20	Core Melt Accident Source Strengths In Containment Atmosphere as a Function of Time	12.2-51
12.2-21	Core Melt Accident Integrated Source Strengths In Containment Atmosphere	12.2-52
12.2-22	Parameters and Assumptions Used for Calculating Containment Airborne Radioactivity Concentrations	12.2-53
12.2-23	Containment Airborne Radioactivity Concentrations (Sheets 1 – 3)	12.2-54
12.2-24	Parameters and Assumptions Used for Calculating Fuel Handling Area Airborne Radioactivity Concentrations	12.2-57
12.2-25	Fuel Handling Area Airborne Radioactivity Concentrations (Sheets 1 – 2)	12.2-58
12.2-26	Parameters and Assumptions Used for Calculating Auxiliary Building Airborne Radioactivity Concentrations	12.2-60
12.2-27	Auxiliary Building Airborne Radioactivity Concentrations (Sheets 1 – 3)	12.2-61
12.3-1	Equipment Specification Limits for Cobalt Impurity Levels	12.3-21

region was operated at a specific power of 40.7 megawatts (thermal) per metric ton of uranium for 1561 effective full-power days.

Spent fuel gamma ray source strengths are presented in Table 12.2-14 for various times after shutdown. These source strengths may be put on a per-unit volume of homogenized core basis by multiplying by the power density (109.7 watts/cc).

Spent fuel neutron source strengths are given in Table 12.2-13 for various times after shutdown. The neutron source strengths may be put on a per-unit volume of homogenized core basis by multiplying them by the power density.

12.2.1.2.4 Irradiated Control Rods, Gray Rods, and Secondary Source Rods

The gamma ray source strengths of the irradiated control rods, gray rods, and secondary source rods are used in establishing radiation shielding requirements during refueling operations and during shipping of irradiated rods.

NRC 086

The absorber material used in the control rods is silver-indium-cadmium (Ag-In-Cd). The gray rods contain either type 304 stainless steel or Ag-In-Cd pellets in a stainless steel sleeve. The gamma ray source strengths associated with the irradiated Ag-In-Cd absorber are listed in Table 12.2-15 for various times after shutdown.

The photoneutron source material used in the secondary source rods is an equal volume mixture of antimony and beryllium (Sb-Be). The gamma ray source strengths associated with the secondary source rods are listed in Table 12.2-16 for various times after shutdown and Table 12.2-17 lists the neutron source strengths. The source values are per cubic centimeter of source material for an irradiation period of 400 days.

The material used for the control rod cladding, gray rod cladding and/or pellets and secondary source rod cladding is Type 304 stainless steel with an assumed maximum cobalt content of 0.12 weight percent. The gamma ray source strengths associated with the irradiated stainless steel are listed in Table 12.2-18 for various times after shutdown.

12.2.1.2.5 Incore Flux Thimbles

Irradiated incore flux thimble gamma ray source strengths are given in Table 12.2-19. These source strengths are used in determining shielding requirements during refueling operations when the flux thimbles are withdrawn from the reactor core.

12.2.1.3 Sources for the Core Melt Accident

The AP1000 is designed to provide adequate core cooling in the event of a postulated loss of coolant accident (LOCA) so that there is no significant core damage. Following a LOCA, the normal residual heat removal system could be used, if available, to provide post-accident cooling. Use of the normal residual heat removal system is acceptable only if the source term is close to the design basis source term (see Table 12.2-12).

Table 12.2-15

IRRADIATED SILVER-INDIUM-CADMIUM CONTROL ROD SOURCE STRENGTHS

Energy Group (Mev/gamma)	Source Strength at Time After Shutdown (Mev/cm^3-sec)		
	1 Day	**1 Week**	**1 Month**
0.20 - 0.40	2.3E+08	2.3E+08	2.2E+08
0.40 - 0.90	1.1E+12	1.1E+12	1.0E+12
0.90 - 1.35	2.0E+11	1.9E+11	1.8E+11
1.35 - 1.80	3.7E+11	3.7E+11	3.4E+11
(Mev/gamma)	**6 Months**	**1 Year**	**5 Years**
0.20 - 0.40	1.4E+08	8.5E+07	1.5E+06
0.40 - 0.90	6.6E+11	4.0E+11	7.1E+09
0.90 - 1.35	1.2E+11	7.2E+10	1.3E+09
1.35 - 1.80	2.3E+11	1.4E+11	2.5E+09

Note:

NRC 086 The absorber cross-sectional area is 0.130~~0.589~~ square centimeters per rod and the absorber material density is 10.2 grams per cubic centimeter.

NRC 086

Table 12.2-18

IRRADIATED ~~TYPE 304~~ STAINLESS STEEL SOURCE STRENGTHS (0.12 WEIGHT PERCENT COBALT)

Energy Group (Mev/gamma)	Source Strength at Time After Shutdown (Mev/cm^3-sec)		
	1 Day	**1 Week**	**1 Month**
0.20 - 0.40	7.1E+09	6.1E+09	3.4E+09
0.40 - 0.90	3.1E+10	2.9E+10	2.6 E+10
0.90 - 1.35	2.4E+11	2.3E+11	2.3E+11
1.35 - 1.80	1.9E+08	1.8E+08	1.4E+08
(Mev/gamma)	**6 Months**	**1 Year**	**5 Years**
0.20 - 0.40	8.3E+07	9.9E+05	0
0.40 - 0.90	1.2E+10	6.4E+09	2.3E+08
0.90 - 1.35	2.1E+11	2.0E+11	1.2E+11
1.35 - 1.80	3.3E+07	5.4E+06	0

Notes:

The various cross-section areas per rod are as follows:

- Ag-In-Cd control rod cladding - 0.136 cm^2
- Sb-Be secondary source rod cladding - 0.136 cm^2
- Gray rod cladding - 0.136 cm^2
- Gray rod sleeve~~pellet~~ - 0.606~~589~~ cm^2 NRC 086

Chapter 13

TABLE OF CONTENTS

Section	Title	Page
CHAPTER 13	CONDUCT OF OPERATIONS	13-1
13.1	Organizational Structure of Applicant	13-1
	13.1.1 Combined License Information Item	13-1
13.2	Training	13-1
	13.2.1 Combined License Information Item	13-1
13.3	Emergency Planning	13-1
	13.3.1 Combined License Information Item	13-2
13.4	Operational Programs	13-2
	13.4.1 Combined License Information Item	13-2
13.5	Plant Procedures	13-2
	13.5.1 Combined License Information Item	13-3
13.6	Security	13-4
NRC 128	13.6.1 Combined License Information Item	13-4
13.7	References	13-4

- Maintenance, inspection, test and surveillance
- Administrative
- Operation of post-72 hour equipment

13.6 Security

NRC 128

The Security Plan consists of the "AP1000 Physical Security Plan," ~~(Reference 5),~~ Training and Qualification Plan, and Safeguards Contingency Plan. The Security Plan will be~~is~~ submitted to the Nuclear Regulatory Commission as a separate licensing document in order to fulfill the requirements for 10 CFR 52.79(35) and 10 CFR 52.79(36)~~0.34~~. The Security Plan will meet~~s~~ the requirements of 10 CFR 52.98(c)~~0.54~~. The plan is classified as Security Safeguards Information and is withheld from public disclosure pursuant to 10 CFR 73.21. Additionally, the "AP1000 Interim Compensatory Measures Report" (Reference 2), the "AP1000 Enhancement Report" (Reference 3), and the "AP1000 Safeguards Assessment Report" (Reference 4) are submitted to the Nuclear Regulatory Commission as separate licensing documents to establish the design of the AP1000 Security Systems. Each document is classified as Security Safeguards information and is withheld from public disclosure pursuant to 10 CFR 73.21.

NRC 128

13.6.1 Combined License Information Item

NRC 128

Combined license applicants referencing the AP1000 certified design will address site-specific information related to the security, contingency, and guards training plans. The combined license applicant will develop the Physical Security Plan, Training and Qualification Plan, and the Safeguards Contingency Plan.

13.7 References

1. Not Used.

2. APP-GW-GLR-067, "AP1000 Interim Compensatory Measures Report," Westinghouse Electric Company LLC.

3. APP-GW-GLR-062, "AP1000 Enhancement Report," Westinghouse Electric Company LLC.

4. APP-GW-GLR-066, "AP1000 Safeguards Report," Westinghouse Electric Company LLC.

NRC 128

5. Not Used.

6. Not Used.

7. WCAP-13864, "Rod Control System Evaluation Program," Revision 1-A, November 1994.

8. USNRC Generic Letter GL-96-01, "Testing of Safety-Related Logic Circuits," January 10, 1996.

9. Not Used.

Chapter 14

NRC 123
NRC 050

- Provide heating, ventilation, and cooling for the main control room, control support area~~technical support center~~, and Class 1E electrical equipment rooms

NRC 123
NRC 050

- Provide air filtration to limit radioactivity in the main control room and control support area~~technical support center~~

- Maintain passive heat sinks at acceptably low initial temperatures

NRC 123
NRC 050

- Maintain the main control room and control support area~~technical support center~~ at positive pressure

The safety-related functions associated with this system are tested as part of the main control room emergency habitability testing described in subsection 14.2.9.1.6.

Prerequisites

The construction testing of the nuclear island nonradioactive ventilation system has been completed. The required preoperational testing of central chilled water system, the hot water heating system, the ac electrical power and distribution systems, and other interfacing systems required for operation of the above systems has been completed. Data collection is available as needed to support the specified testing and system configurations.

General Test Acceptance Criteria and Methods

Nuclear island nonradioactive ventilation system performance is observed and recorded during a series of individual component and integrated system testing to verify the system performs its defense-in-depth functions. The following testing demonstrates that the system performs its defense-in-depth functions as described in subsection 9.4.1 and appropriate design specifications:

a) Proper function of the fans, filters, heaters, coolers, and dampers is verified.

b) Proper operation of instrumentation, controls, actuation signals, and alarms and interlocks is verified. This testing includes the following:

   - Smoke detectors and alarms
   - Air handling unit and fan flows, controls, and alarms
   - Differential air pressures and alarms
   - Air and air filtration unit charcoal temperatures, controls, and alarms
   - Air relative humidity measurements, controls, and alarms
   - Isolation/shutoff damper controls
   - Fire/smoke damper controls

   This testing includes operation from the main control room.

c) The proper air flows from and through each air handling unit, as well as to and from the main control room, control support area, and other equipment rooms is established for each mode of operation.

Table 14.3-2 (Sheet 9 of 17)

DESIGN BASIS ACCIDENT ANALYSIS

Reference	Design Feature	Value
Section 7.3.1.2.4	The second and third stage valves open on time delays following generation of the first stage actuation signal via the protection and safety monitoring system.	
Section 7.3.1.2.5	The reactor coolant pumps are tripped upon generation of a safeguards actuation signal or upon generation of a low-2 pressurizer water level signal.	
Section 7.3.1.2.7	The passive residual heat removal heat exchanger control valves are opened on low steam generator water level or on a CMT actuation signal via the protection and safety monitoring system.	
Section 7.3.1.2.9	The containment recirculation isolation valves are opened on a safeguards actuation signal in coincidence with low-3 in-containment refueling water storage tank water level via the protection and safety monitoring system.	
Section 7.3.1.2.14	The demineralized water system isolation valves close on a signal from the protection and safety monitoring system derived from either a reactor trip signal, a source range flux doubling signal, or low input voltage to the 1E dc ~~and~~ uninterruptible power supply battery chargers.	
Section 7.3.1.2.15	The chemical and volume control system makeup line isolation valves automatically close on a signal from the protection and monitoring system derived from ~~either~~ a source range flux doubling high-2 pressurizer level, high-2 steam generator level signal, a safeguards signal coincident with high-1 pressurizer level, or high-2 containment radioactivity.	
Section 7.3.2.2.1	The protection and monitoring system automatically generate an actuation signal for an engineered safety feature whenever a monitored condition reaches a preset level.	
Section 7.3.2.2.9	Manual initiation at the system-level exists for the engineered safety features actuation.	
Section 7.4.3.1	If temporary evacuation of the main control room is required because of some abnormal main control room condition, the operators can establish and maintain safe shutdown conditions for the plant from outside the main control room through the use of controls and monitoring located at the remote shutdown workstation.	

NRC 158

NRC 158

Table 14.3-2 (Sheet 11 of 17)

DESIGN BASIS ACCIDENT ANALYSIS

Reference	Design Feature	Value
Section 9.1.4.1.1	In the event of a safe shutdown earthquake (SSE), handling equipment cannot fail in such a manner as to prevent required function of seismic Category 1 equipment.	
Section 9.3.6.3.7	The chemical and volume control system contains two redundant safety-related valves to isolate the demineralized water system from the makeup pump suction.	
Section 9.3.6.3.7	The chemical and volume control system contains two safety-related valves to isolate the makeup flow to the reactor coolant system.	
Section 9.3.6.4.5	The chemical and volume control system contains two safety-related valves to isolate the makeup flow to the reactor coolant system.	
Section 9.3.6.4.5.1	The chemical and volume control system contains two redundant safety-related valves to isolate the demineralized water system from the makeup pump suction.	
Section 9.3.6.7	The demineralized water system isolation valves close on a signal from the protection and safety monitoring system derived from either a reactor trip signal, a source range flux doubling signal, low input voltage to the 1E dc and uninterruptible power supply battery chargers, or a safety injection signal.	
Section 9.3.6.7	The chemical and volume control system makeup line isolation valves automatically close on a signal from the protection and safety monitoring system derived from ~~either~~ a source range flux doubling, high-2 pressurizer level, high steam generator level signal, or a safeguards signal coincident with high-1 pressurizer level.	
Section 10.1.2	Safety valves are provided on both main steam lines.	
Section 10.2.2.4.3	The flow of the main steam entering the high-pressure turbine is controlled by four stop valves and four governing control valves. The stop valves are closed by actuation of the emergency trip system devices.	
Section 10.3.1.1	The main steam supply system is provided with a main steam isolation valve and associated MSIV bypass valve on each main steam line from its respective steam generator.	
Section 10.3.1.1	A main steam isolation valve (MSIV) on each main steam line prevents the uncontrolled blowdown of more than one steam generator and isolates nonsafety-related portions of the system.	

NRC 158

Table 14.3-3

ANTICIPATED TRANSIENT WITHOUT SCRAM

Reference	Design Feature	Value
Section 7.7.1.11	The diverse actuation system is a nonsafety-related system that provides a diverse backup to the protection and safety monitoring system.	
Section 7.7.1.11	The diverse actuation system trips the reactor control rods and the turbine on low wide range steam generator water level and on low pressurizer water level.	
Section 7.7.1.11	The diverse actuation system initiates passive residual heat removal on low wide range steam generator water level or high hot leg temperature; actuates core makeup tanks and trips the reactor coolant pumps on low pressurizer water level; and isolates selected containment penetrations and starts passive containment cooling on high containment temperature.	
Section 7.7.1.11	The manual actuation function of the diverse actuation system is implemented by wiring the controls located in the main control room directly to the final loads in a way that bypasses the normal path through the control room multiplexers, the protection and safety monitoring system cabinets, and the diverse actuation system logic.	
Section 7.7.1.11	The diverse actuation system uses a microprocessor or special purpose logic processor board different from those used in the protection and safety monitoring system.	
Section 7.7.1.11	The diverse actuation system hardware implementation is different from that of the protection and safety monitoring system.	
Section 7.7.1.11	The operating system and programming language of the diverse actuation system is different from that of the protection and safety monitoring system.	

NRC 096

Table 14.3-6 (Sheet 7 of 10)

PROBABILISTIC RISK ASSESSMENT

Reference		Design Feature	Value
Figure	7.2-1 (Sheets 16 and 20)	The squib valves and MOVs for reactor cavity flooding are manually actuated via PMS and DAS from the control room.	
Section	7.3.1.2.7 7.7.1.11	The PRHR air-operated valves are automatically actuated and manually actuated from the control room by either PMS or DAS.	
Section	7.3.1.2.20	The RNS containment isolation MOVs are actuated via PMS.	
Section	7.5.4	PMS has two divisions of safety-related post-accident parameter display.	
Section	7.6.1.1	An interlock is provided for the normally closed motor-operated normal residual heat removal system inner and outer suction isolation valves. Each valve is interlocked so that it cannot be opened unless the reactor coolant system pressure is below a preset pressure.	
Section	7.7.1.11	The diverse actuation system is a nonsafety-related system that provides a diverse backup to the protection and safety monitoring system.	
Section	7.7.1.11	The diverse actuation system trips the reactor control rods and the turbine on low wide range steam generator water level and on low pressurizer water level.	
Section	7.7.1.11	DAS manual initiation functions are implemented in a manner that bypasses the signal processing equipment of the DAS.	
Section	7.7.1.11	The DAS automatic actuation signals are generated in a functionally diverse manner from the PMS signals. Diversity between DAS and PMS is achieved by the use of different architecture, ~~different~~ hardware implementations, and <u>any</u> ~~different~~ software.	
Section	8.3.1.1.1	On loss of power to a 6900V diesel-backed bus, the associated diesel generator automatically starts and produces ac power. The source circuit breakers and bus load circuit breakers are opened, and the generator is connected to the bus. Each generator has an automatic load sequencer to enable controlled loading on the associated buses.	

NRC 096

Table 14.3-7 (Sheet 1 of 3)

RADIOLOGICAL ANALYSIS

Reference	Design Feature	Value
Table 2-1	Plant elevation for maximum flood level (ft)	≤ 100
Section 2.3.4	Atmospheric dispersion factors - X/Q (sec/m^3) - Site Boundary X/Q 0 - 2 hour time interval - Low Population Zone Boundary X/Q 0 - 8 hours 8 - 24 hours 24 - 96 hours 96 - 720 hours	 ≤ ~~5.~~1 x 10^{-3}~~4~~ ≤ 5~~2.2~~ x 10^{-4} ≤ 3~~1.6~~ x 10^{-4} ≤ 1.5~~0~~ x 10^{-4}~~5~~ ≤ 8.0 x 10^{-5}
Table 6.2.3-1	Containment penetration isolation features are configured as in Table 6.2.3-1	
Table 6.2.3-1	Maximum closure time for remotely operated containment purge valves (seconds)	≤ 10
Table 6.2.3-1	Maximum closure time for all other remotely operated containment isolation valves (seconds)	≤ 60
Section 6.4.2.3	The minimum storage capacity of all storage tanks in the VES (scf)	≥ 314,132
Section 6.4.3.2	The maximum temperature rise in the main control room pressure boundary following a loss on the nuclear island nonradioactive ventilation system over a 72-hour period (°F)	+ 10.8
Section 6.4.4	The maximum temperature in the instrumentation and control rooms and dc equipment rooms following a loss of the nuclear island nonradioactive ventilation system remains over a 72-hour period (°F).	≤ 120
Section 6.4.4	The main control emergency habitability system nominally provides 65 scfm of ventilation air to the main control room from the compressed air storage tanks.	65 ± 5
Section 6.4.4	Sixty-five ± five scfm of ventilation flow is sufficient to pressurize the control room to 1/8th inch water gauge differential pressure (WIC).	1/8th
Figure 6.4-2	The main control room emergency habitability system consists of two sets of emergency air storage tanks and an air delivery system to the main control room.	
Section 6.5.3	The passive heat removal process and the limited leakage from the containment result in offsite doses less than the regulatory guideline limits.	

NRC 098

NRC 098

14.4 Combined License Applicant Responsibilities

This section describes the Combined License applicant's and holder's responsibilities required to perform the AP1000 plant initial test program.

14.4.1 Organization and Staffing

The specific staff, staff responsibilities, authorities, and personnel qualifications for performing the AP1000 initial test program are the responsibility of the Combined License applicant. This test organization is responsible for the planning, executing, and documenting of the plant initial testing and related activities that occur between the completion of plant/system/component construction and commencement of plant commercial operation. Transfer and retention of experience and knowledge gained during initial testing for the subsequent commercial operation of the plant is an objective of the test program.

14.4.2 Test Specifications and Procedures

The Combined License information requested in this subsection has been partially addressed in APP-GW-GLR-037 (Reference 1), and the applicable changes are incorporated into the DCD. Test Specifications have been developed as indicated in Reference 1 and are available for NRC onsite review at Westinghouse's offices.

The Combined License holder will provide the Preoperational and Startup Procedures for the NRC prior to each planned test in accordance with the requirements of DCD subsection 14.2.3.

The following words represent the original Combined License Information Item commitment:

> The Combined License applicant is responsible for providing test specifications and test procedures for the preoperational and startup tests, as identified in subsection 14.2.3, for review by the NRC.

14.4.3 Conduct of Test Program

NRC 029 The Combined License information requested in this subsection has been addressed in APP-GW-GLR-038, Revision 1 (Reference 2), and the applicable changes are incorporated into the DCD. No additional work is required by the Combined License applicant to address the Combined License information requested in this subsection as delineated in the following paragraph:

NRC 029

> The program management description for the process to develop the AP1000 Startup Administrative Manual is delineated in APP-GW-GLR-038, Revision 1 (Reference 2). There are no residual open items for COL applicants related to this COL Information item.

Chapter 15

Table 15.0-4a (Sheet 1 of 2)

PROTECTION AND SAFETY MONITORING SYSTEM SETPOINTS AND TIME DELAY ASSUMED IN ACCIDENT ANALYSES

Function	Limiting Setpoint Assumed in Analyses	Time Delays (seconds)
Reactor trip on power range high neutron flux, high setting	118%	0.9
Reactor trip on power range high neutron flux, low setting	35%	0.9
NRC 155 ~~High neutron flux, P-8~~	~~84%~~	~~0.9~~
Reactor trip on source range neutron flux reactor trip	Not applicable	0.9
Overtemperature ΔT	Variable (see Figure 15.0.3-1)	2.0
Overpower ΔT	Variable (see Figure 15.0.3-1)	2.0
Reactor trip on high pressurizer pressure	2460 psia	2.0
Reactor trip on low pressurizer pressure	1800 psia	2.0
Reactor trip on low reactor coolant flow in either hot leg	87% loop flow	1.45
Reactor trip on reactor coolant pump under speed	90%	0.767
Reactor trip on low steam generator narrow range level	95,000 lbm	2.0
High-2 steam generator level	100% of narrow range level span	2.0 (reactor trip) 0.0 (turbine trip) 2.0 (feedwater isolation)
Reactor trip on high-3 pressurizer water level	76% of span	2.0
PRHR actuation on low steam generator wide range level	55,000 lbm	2.0
"S" signal and steamline isolation on low T_{cold}	500°F	2.0
"S" signal and steamline isolation on low steamline pressure	405 psia (with an adverse environment assumed) 535 psia (without an adverse environment assumed)	2.0
"S" signal on low pressurizer pressure	1700 psia	2.0

Table 15.0-6 (Sheet 3 of 4)

PLANT SYSTEMS AND EQUIPMENT AVAILABLE FOR TRANSIENT AND ACCIDENT CONDITIONS

Incident	Reactor Trip Functions	ESF Actuation Functions	ESF and Other Equipment
Section 15.4 (Cont.)			
Uncontrolled RCCA bank withdrawal at power	Power range high neutron flux, high power range positive neutron flux rate, overtemperature ΔT, over-power ΔT, high pressurizer pressure, high pressurizer water level, manual	–	Pressurizer safety valves, steam generator safety valves
RCCA misalignment	Overtemperature ΔT, manual	–	–
NRC 155 Startup of an inactive reactor coolant pump at an incorrect temperature	Power range high flux, low flow (P-10~~8~~ interlock), manual	–	–
Chemical and volume control system malfunction that results in a decrease in boron concentration in the reactor coolant	Source range high flux, overtemperature ΔT, manual	Source range flux doubling	CVS to RCS isolation valves, makeup pump suction isolation valves, from the demineralized water transfer and storage system
Spectrum of RCCA ejection accidents	Power range high flux, high positive flux rate, manual	–	Pressurizer safety valves
Section 15.5			
Increase in reactor coolant inventory			
Inadvertent operation of the ECCS during power operation	High pressurizer pressure, manual, “safeguards” trip, high pressurizer level	High pressurizer level, low T_{cold}	Core makeup tank, pressurizer safety valves, chemical and volume control system isolation, PRHR
Chemical and volume control system malfunction that increases reactor coolant inventory	High pressurizer pressure, “safeguards” trip, high pressurizer level, manual	High pressurizer level, low T_{cold}	Core makeup tank, pressurizer safety valves, chemical and volume control system isolation, PRHR

15A.3.3 Atmospheric Dispersion Factors

Subsection 2.3.4 lists the off-site short-term atmospheric dispersion factors (χ/Q) for the reference site. Table 15A-5 (Sheet 1 of 2) reiterates these χ/Q values.

The atmospheric dispersion factors (χ/Q) to be applied to air entering the main control room following a design basis accident are specified at the HVAC intake and at the annex building entrance (which would be the air pathway to the main control room due to ingress/egress). A set of χ/Q values is identified for each potential activity release location that has been identified and the two control room receptor locations. ~~The χ/Q values have been selected in concert with the design basis accident radiological consequences analyses to obtain limiting values. In this manner, the maximum acceptable χ/Q values consistent with meeting dose acceptance criteria have been obtained.~~ These χ/Q values are listed in Table 15A-6 and are provided in Table 2-1 (Sheet 3 of 3).

NRC 142

NRC 142

~~Subsections 2.3.6.4 and 2.3.6.5 contain information related to diffusion.~~ The site-specific control room χ/Q values shall be bounded by the values in Table 15A-6. For a site selected that has χ/Q values that exceed the values in Table 15A-6, how the radiological consequences associated with the controlling design basis accident continue to meet the control room operator dose limits given in General Design Criteria 19 using site-specific χ/Q values should be addressed. Topographical characteristics in the vicinity of the site for restrictions of horizontal and/or vertical plume spread, channeling or other changes in airflow trajectories, and other unusual conditions affecting atmospheric transport and diffusion between the source and the receptors should be considered. No further action is required for sites within the bounds of the site parameters for atmospheric dispersion.

NRC 142

Table 15A-7 identifies the AP1000 source and receptor data to~~that can~~ be used when determining the site-specific control room χ/Q values using the ARCON96 code (References 4 and 5).

The main control room χ/Q values do not incorporate occupancy factors.

The locations of the potential release points and their relationship to the main control room air intake and the annex building access door are shown in Figure 15A-1.

15A.4 References

1. Murphy, K. G., Campe, K. M., "Nuclear Power Plant Control Room Ventilation System Design for Meeting General Criterion 19," paper presented at the 13th AEC Air Cleaning Conference.

2. EPA Federal Guidance Report No. 11, "Limiting Values of Radionuclide Intake and Air Concentration and Dose Conversion Factors for Inhalation, Submersion, and Ingestion," EPA-520/1-88-020, September 1988.

3. EPA Federal Guidance Report No. 12, "External Exposure to Radionuclides in Air, Water, and Soil," EPA 402-R-93-081, September 1993.

4. NUREG/CR-6331, Ramsdell, J. V. and Simonen, C. A., "Atmospheric Relative Concentrations in Building Wakes," Revision 1, May 1997.

Chapter 16

Table 3.3.1-1 (page 1 of 5)
Reactor Trip System Instrumentation

FUNCTION	APPLICABLE MODES OR OTHER SPECIFIED CONDITIONS	REQUIRED CHANNELS	CONDITIONS	SURVEILLANCE REQUIREMENTS	ALLOWABLE VALUE	TRIP SETPOINT
1. Manual Reactor Trip	1,2	2	B	SR 3.3.1.10	NA	NA
	3[a],4[a],5[a]	2	C	SR 3.3.1.10	NA	NA
2. Power Range Neutron Flux						
a. High Setpoint	1,2	4	D	SR 3.3.1.1 SR 3.3.1.2 SR 3.3.1.6 SR 3.3.1.9 SR 3.3.1.11	≤ 109.06% RTP	109% RTP
b. Low Setpoint	1[b],2	4	E	SR 3.3.1.1 SR 3.3.1.7 SR 3.3.1.9 SR 3.3.1.11	≤ 25.06% RTP	25% RTP
3. Power Range Neutron Flux High Positive Rate	1,2	4	E	SR 3.3.1.6 SR 3.3.1.9 SR 3.3.1.11	≤ 5.06% RTP with time constant ≥ 2 sec	5.0% RTP with time constant ≥ 2 sec
4. Intermediate Range Neutron Flux	1[b],2[c]	4	F,G	SR 3.3.1.1 SR 3.3.1.7 SR 3.3.1.9 SR 3.3.1.11	≤ 25.23% RTP	25% RTP
	2[d]	4	H	SR 3.3.1.1 SR 3.3.1.7 SR 3.3.1.9 SR 3.3.1.11	≤ 25.23% RTP	25% RTP
5. Source Range Neutron Flux High Setpoint	2[d]	4	I,J	SR 3.3.1.1 SR 3.3.1.7 SR 3.3.1.9 SR 3.3.1.11	≤ 1.01 E5 cps	1.0 E5 cps
	3[a],4[a],5[a]	4	J,R	SR 3.3.1.1 SR 3.3.1.6 SR 3.3.1.9 SR 3.3.1.11	≤ 1.01 E5 cps	1.0 E5 cps
	3[e],4[e],5[e]	1	S	SR 3.3.1.1 SR 3.3.1.9	NA	NA

(a) With Reactor Trip Breakers (RTBs) closed and Plant Control System capable of rod withdrawal.

(b) Below the P-10 (Power Range Neutron Flux) interlocks.

(c) Above the P-6 (Intermediate Range Neutron Flux) interlocks.

(d) Below the P-6 (Intermediate Range Neutron Flux) interlocks.

(e) With RTBs open. In this condition, Source Range Function does not provide reactor trip but does provide indication.

NRC 085 [Reviewer Note: In all cases, the values specified for trip setpoints and allowable values must be confirmed following completion of the plant-specific setpoint study. Upon selection of the plant specific instrumentation, the Trip Setpoints will be calculated in accordance with the setpoint methodology described in WCAP-16361-P. Allowable Values will be calculated in accordance with the setpoint methodology and specified in the Allowable Value column. The plant specific setpoint calculations will reflect the latest licensing analysis/design basis and may incorporate NRC accepted improvements in setpoint methodology.

Table 3.3.1-1 (page 2 of 5)
Reactor Trip System Instrumentation

FUNCTION	APPLICABLE MODES OR OTHER SPECIFIED CONDITIONS	REQUIRED CHANNELS	CONDITIONS	SURVEILLANCE REQUIREMENTS	ALLOWABLE VALUE	TRIP SETPOINT
6. Overtemperature ΔT	1,2	4	E	SR 3.3.1.1 SR 3.3.1.3 SR 3.3.1.4 SR 3.3.1.6 SR 3.3.1.8 SR 3.3.1.11	Refer to Note 1 Table 3.3.1-1 (Page 5 of 5) ~~(Page 3.3.1-17)~~	Refer to Note 1 Table 3.3.1-1 (Page 5 of 5)~~(Page 3.3.1-17)~~
7. Overpower ΔT	1,2	4	E	SR 3.3.1.1 SR 3.3.1.6 SR 3.3.1.8 SR 3.3.1.11	Refer to Note 2 Table 3.3.1-1 (Page 5 of 5)~~(Page 3.3.1-17)~~	Refer to Note 2 Table 3.3.1-1 (Page 5 of 5)~~(Page 3.3.1-17)~~
8. Pressurizer Pressure	1[f]	4	K	SR 3.3.1.1 SR 3.3.1.6 SR 3.3.1.8 SR 3.3.1.11	≥ 1809.9 psig	1810.3 psig
a. Low Setpoint						
b. High Setpoint	1,2	4	E	SR 3.3.1.1 SR 3.3.1.6 SR 3.3.1.8 SR 3.3.1.11	≤ 2420.7 psig	2420.3 psig
9. Pressurizer Water Level – High 3	1[f]	4	K	SR 3.3.1.1 SR 3.3.1.6 SR 3.3.1.8 SR 3.3.1.11	≤ 71.05%	71%
10. Reactor Coolant Flow – Low	1[f]	4 per hot leg	L	SR 3.3.1.1 SR 3.3.1.6 SR 3.3.1.8 SR 3.3.1.11	≥ 89.96%[i]	90%[i]
11. Reactor Coolant Pump (RCP) Bearing Water Temperature – High	1[f]	4 per RCP	L	SR 3.3.1.1 SR 3.3.1.6 SR 3.3.1.8 SR 3.3.1.11	≤ 230.4°F	230°F
12. RCP Speed – Low	1[f]	4	K	SR 3.3.1.1 SR 3.3.1.6 SR 3.3.1.8 SR 3.3.1.11	≥ 90.9%	91%
13. Steam Generator (SG) Narrow Range Water Level – Low	1,2	4 per SG	E	SR 3.3.1.1 SR 3.3.1.6 SR 3.3.1.8 SR 3.3.1.11	≥ 20.95% span	21% span

(f) Above the P-10 (Power Range Neutron Flux) interlock.

(i) 90% of loop specific indicated flow.

Table 3.3.2-1 (page 10 of 13)
Engineered Safeguards Actuation System Instrumentation

FUNCTION	APPLICABLE MODES OR OTHER SPECIFIED CONDITIONS	REQUIRED CHANNELS	CONDITIONS	SURVEILLANCE REQUIREMENTS	ALLOWABLE VALUE	TRIP SETPOINT
17. Normal Residual Heat Removal System Isolation						
a. Containment Radioactivity – High 2	1,2,3[m]	4	B,Q	SR 3.3.2.1 SR 3.3.2.4 SR 3.3.2.5 SR 3.3.2.6	≤ 150 R/hr	100 R/hr
b. Safeguards Actuation	1,2,3[m]	Refer to Function 1 (Safeguards Actuation) for all initiating functions and requirements.				
c. Manual Initiation	1,2,3[m]	2 switch sets	E,Q	SR 3.3.2.3	NA	NA
18. ESFAS Interlocks						
a. Reactor Trip, P-4	1,2,3	3 divisions	D,M	SR 3.3.2.3	NA	NA
b. Pressurizer Pressure, P-11	1,2,3	4	J,M	SR 3.3.2.1 SR 3.3.2.4 SR 3.3.2.5 ~~SR 3.3.2.6~~	≤ 1970.4 psig	1970 psig
c. Intermediate Range Neutron Flux, P-6	2	4	J,L	SR 3.3.2.1 SR 3.3.2.4 SR 3.3.2.5 ~~SR 3.3.2.6~~	≥ 9.91 E-6% RTP	1E-5% RTP
d. Pressurizer Level, P-12	1,2,3,4,5,6	4	J,M BB,Y	SR 3.3.2.1 SR 3.3.2.4 SR 3.3.2.5 ~~SR 3.3.2.6~~	≤ 16.05% span	16% span
e. RCS Pressure, P-19	1,2,3,4[j]	4	J,N	SR 3.3.2.1 SR 3.3.2.4 SR 3.3.2.5 ~~SR 3.3.2.6~~	≤ 702 psig	700 psig
19. Containment Air Filtration System Isolation						
a. Containment Radioactivity – High 1	1,2,3,4[j]	4	B,Z	SR 3.3.2.1 SR 3.3.2.4 SR 3.3.2.5 SR 3.3.2.6	≤ 3 R/hr	2 R/hr
b. Containment Isolation	Refer to Function 3 (Containment Isolation) for initiating functions and requirements.					

(j) With the RCS not being cooled by the Normal Residual Heat Removal System (RNS).

(m) Not applicable for valve isolation Functions whose associated flow path is isolated.

SURVEILLANCE REQUIREMENTS (continued)

SURVEILLANCE		FREQUENCY
SR 3.8.1.2	Verify each battery charger supplies ≥ 400 amps at greater than or equal to the minimum established float voltage for ≥ ~~[~~8~~]~~ hours. OR Verify each battery charger can recharge the battery to the fully charged state within 24 hours while supplying the largest combined demands of the various continuous steady state loads, after a battery discharge to the bounding design basis event discharge state.	24 months
SR 3.8.1.3	---------- **- NOTES -** 1. The modified performance discharge test in SR 3.8.7.6 may be performed in lieu of SR 3.8.1.3. 2. This Surveillance shall not normally be performed in MODE 1, 2, 3, or 4 unless the spare battery is connected to replace the battery being tested. However, portions of the Surveillance may be performed to reestablish OPERABILITY provided an assessment determines the safety of the plant is maintained or enhanced. ---------- Verify battery capacity is adequate to supply, and maintain in OPERABLE status, the required emergency loads for the design duty cycle when subjected to a battery service test.	24 months

NRC 101

4.0 DESIGN FEATURES

4.3 Fuel Storage

4.3.1 Criticality

4.3.1.1 The spent fuel storage racks are designed and shall be maintained with:

a. Fuel assemblies having a maximum U-235 enrichment of 5.0 weight percent.

b. $k_{eff} \leq 0.95$ if fully flooded with unborated water which includes an allowance for uncertainties as described in Section 9.1, "Fuel Storage and Handling."

c. A nominal 10.90 inch center-to-center distance between fuel assemblies placed in Region 1, a nominal 9.028 inch center-to-center distance between fuel assemblies placed in Region 2 of the spent fuel storage racks, and a nominal 11.62 inch center-to-center distance between fuel assemblies placed in the Defective Fuel Cells.

NRC 100

d. New or partially spent fuel assemblies with any discharge burnup may be allowed unrestricted storage in Region 1 and the Defective Fuel Cells of Figure 4.3-1;

e. Partially spent fuel assemblies meeting the initial enrichment, burnup, and decay time requirements of LCO 3.7.12, "Spent Fuel Pool Storage," may be stored in Region 2 of Figure 4.3-1, and

f. New and spent fuel assemblies meeting the Figure 4.3-2 location-specific initial enrichment, burnup, and decay time requirements of LCO 3.7.12, "Spent Fuel Pool Storage," may be stored in specified Region 2 locations.

4.3.1.2 The new fuel storage racks are designed and shall be maintained with:

a. Fuel assemblies having a maximum U-235 enrichment of 5.0 weight percent.

b. $k_{eff} \leq 0.95$ if fully flooded with unborated water which includes an allowance for uncertainties as described in Section 9.1, "Fuel Storage and Handling."

c. $k_{eff} \leq 0.98$ if moderated by aqueous foam which includes an allowance for uncertainties as described in Section 9.1, "Fuel Storage and Handling."

d. A nominal 10.90 inch center-to-center distance between fuel assemblies placed in the new fuel storage racks.

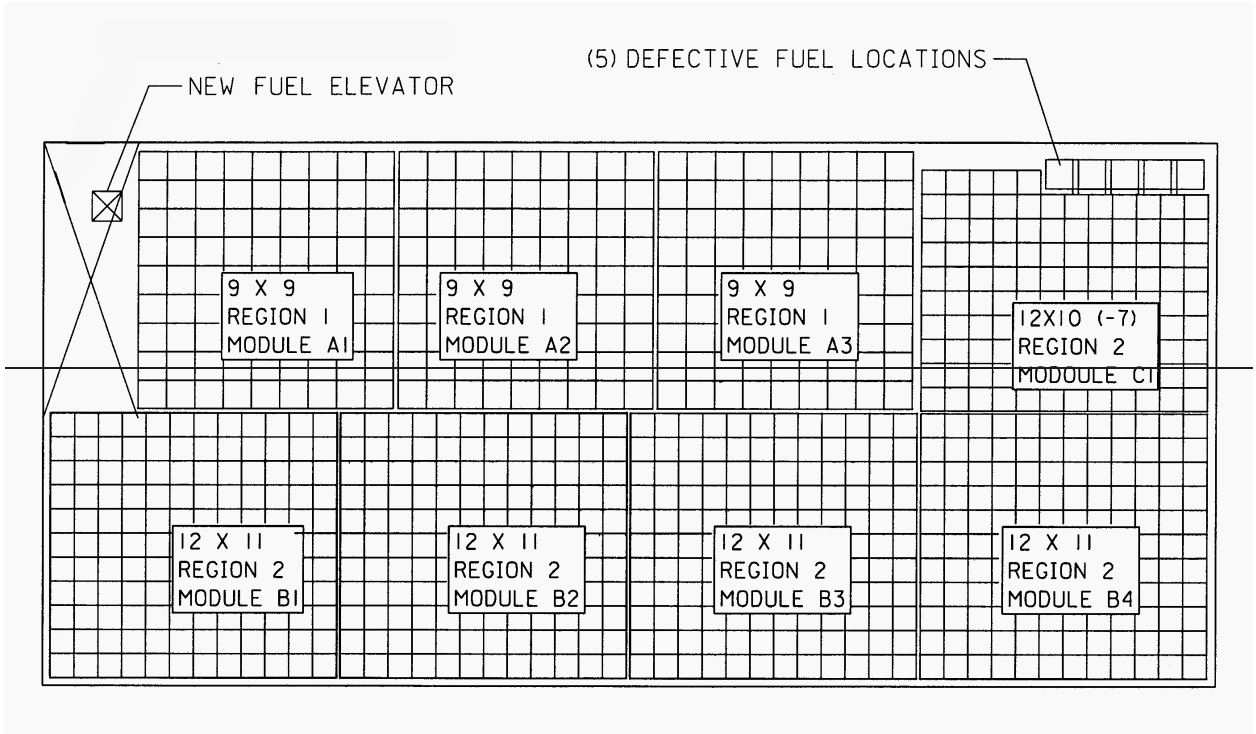

~~Region 1 (A1, A2, A3) – 243 locations~~

~~Region 2 (B1, B2, B3, B4, C1) – 641 locations~~

~~Defective Fuel Cells (DFCs) – 5 locations~~

~~Total Storage Locations – 889~~

NRC 100

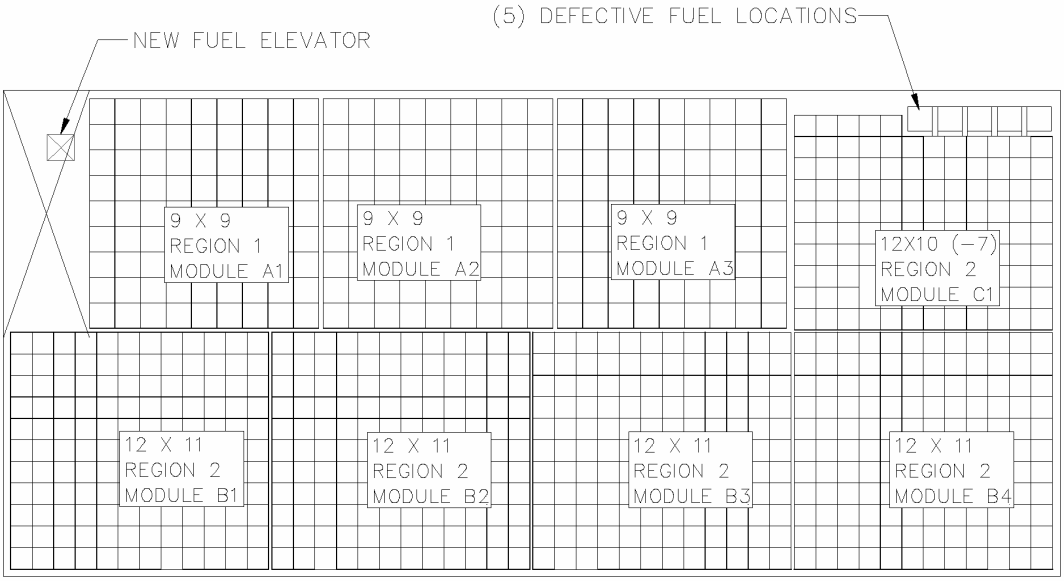

REGION 1 (A1,A2,A3) – 243 LOCATIONS
REGION 2 (B1,B2,B3,B4,C1) – 641 LOCATIONS
DEFECTIVE FUEL CELLS (DFCS) – 5 LOCATIONS
TOTAL STORAGE LOCATIONS – 889

Figure 4.3-1

Discrete Two Region Spent Fuel Pool Rack Layout

5.0 ADMINISTRATIVE CONTROLS

5.3 Unit Staff Qualifications

- REVIEWER'S NOTE -

[Minimum qualifications for members of the unit staff shall be specified by use of an overall qualification statement referencing an ANSI Standard acceptable to the NRC staff or by specifying individual position qualifications. Generally, the first method is preferable; however, the second method is adaptable to those unit staffs requiring special qualification statements because of unique organizational structures.]

5.3.1 Each member of the unit staff shall meet or exceed the minimum qualifications of [Regulatory Guide 1.8, Revision 2, 1987, or more recent revisions, or ANSI Standards acceptable to the NRC staff]. [The staff not covered by ~~[~~Regulatory Guide 1.8~~]~~ shall meet or exceed the minimum qualifications of ~~[~~Regulations, Regulatory Guides, or ANSI Standards acceptable to NRC staff].

NRC 119

5.3.2 For the purpose of 10 CFR 55.4, a licensed Senior Reactor Operator (SRO) and a licensed reactor operator (RO) are those individuals who, in addition to meeting the requirements of TS 5.3.1, perform the functions described in 10 CFR 50.54(m).

5.0 ADMINISTRATIVE CONTROLS

5.5 Programs and Manuals

The following programs shall be established, implemented, and maintained.

5.5.1 Offsite Dose Calculation Manual (ODCM)

a. The ODCM shall contain the methodology and parameters used in the calculation of offsite doses resulting from radioactive gaseous and liquid effluents, in the calculation of gaseous and liquid effluent monitoring alarm and trip setpoints, and in the conduct of the radiological environmental monitoring program; and

b. The ODCM shall also contain the radioactive effluent controls and radiological environmental monitoring activities, and descriptions of the information that should be included in the Annual Radiological Environmental Operating, and Radioactive Effluent Release Reports required by Specification 5.6.2 and Specification 5.6.3.

Licensee initiated changes to the ODCM:

a. Shall be documented and records of reviews performed shall be retained. This documentation shall contain:

   1. Sufficient information to support the change(s) together with the appropriate analyses or evaluations justifying the change(s), and

   2. A determination that the change(s) maintain the levels of radioactive effluent control required by 10 CFR 20.1302~~106~~, 40 CFR 190, 10 CFR 50.36a, and 10 CFR 50, Appendix I, and not adversely impact the accuracy or reliability of effluent, dose, or setpoint calculations;

NRC 149

b. Shall become effective after the approval of the plant manager; and

c. Shall be submitted to the NRC in the form of a complete, legible copy of the changed portion of the ODCM as a part of or concurrent with the Radioactive Effluent Release Report for the period of the report in which any change in the ODCM was made. Each change shall be identified by markings in the margin of the affected pages, clearly indicating the area of the page that was changed, and shall indicate the date (i.e., month and year) the change was implemented.

5.5 Programs and Manuals

5.5.8 Containment Leakage Rate Testing Program (continued)

d. Leakage Rate acceptance criteria are:

1. Containment leakage rate acceptance criterion is 1.0 L_a. During the first unit startup following testing in accordance with this program, the leakage rate acceptance criteria are ≤ 0.60 L_a for the Type B and Type C tests and ≤ 0.75 L_a for Type A tests;

2. Air lock testing acceptance criteria are:

a) Overall air lock leakage rate is ≤ [0.05] L_a when tested at ≥ P_a,

b) For each door, leakage rate is ≤ [0.01] L_a when pressurized to ≥ [10] psig.

e. The provisions of SR 3.0.3 are applicable to the Containment Leakage Rate Testing Program.

f. Nothing in these Technical Specifications shall be construed to modify the testing Frequencies required by 10 CFR 50, Appendix J.

5.5.9 System Level OPERABILITY Testing Program

The System Level OPERABILITY Testing Program provides requirements for performance tests of passive systems. The System Level Inservice Tests specified in Section 3.9.6 and Table 3.9-17 apply when specified by individual Surveillance Requirements.

a. The provisions of SR 3.0.2 are applicable to the test frequencies specified in Table 3.9-17 for performing system level OPERABILITY testing activities; and

NRC 162

b. The provisions of SR 3.0.3 are applicable to system level OPERABILITY testing activities.

5.5.10 Component Cyclic or Transient Limit

This program provides controls to track the Table 3.9-1A cyclic and transient occurrences to ensure that components are maintained within the design limits.

BASES

APPLICABLE SAFETY ANALYSES

The fuel cladding must not sustain damage as a result of normal operation and AOOs. The reactor core SLs are established to preclude violation of the following fuel design criteria:

a. There must be at least 95% probability at a 95% confidence level (the 95/95 DNB criterion) that the hot fuel rod in the core does not experience DNB; and

b. The hot fuel pellet in the core must not experience centerline fuel melting.

The Reactor Trip System (RTS) setpoints (Ref. 2), in combination with all the LCOs, are designed to prevent any anticipated combination of transient conditions for Reactor Coolant System (RCS) temperature, pressure, RCS Flow, ΔI, and THERMAL POWER level that would result in a departure from nucleate boiling ratio (DNBR) of less than the DNBR limit and preclude the existence of flow instabilities.

Automatic enforcement of these reactor core SLs is provided by the appropriate operation of the PMS and the steam generator safety valves.

The SLs represent a design requirement for establishing the RTS setpoints. LCO 3.4.1, "RCS Pressure, Temperature, and Flow Departure from Nucleate Boiling (DNB) Limits," or the assumed initial conditions of the safety analyses (as indicated in Section 7.2, Ref. 2) provide more restrictive limits to ensure that the SLs are not exceeded.

SAFETY LIMITS

NRC 156

The figure provided in the COLR shows the loci of points of THERMAL POWER, RCS pressure, and cold leg~~average~~ temperature for which the minimum DNBR is not less than the safety analysis limit, that fuel centerline temperature remains below melting, that the average enthalpy in the hot leg is less than or equal to the enthalpy of saturated liquid, or that the exit quality is within the limits defined by the DNBR correlation.

The reactor core SLs are established to preclude violation of the following fuel design criteria:

a. There must be at least a 95% probability at a 95% confidence level (the 95/95 DNB criterion) that the hot fuel rod in the core does not experience DNB and

b. There must be at least a 95% probability at a 95% confidence level that the hot fuel pellet in the core does not experience centerline fuel melting.

BASES

SAFETY LIMITS (continued)

The reactor core SLs are used to define the various RPS functions such that the above criteria are satisfied during steady state operation, normal operational transients, and anticipated operational occurrences (AOOs). To ensure that the RPS precludes the violation of the above criteria, additional criteria are applied to the Overtemperature and Overpower ΔT reactor trip functions. That is, it must be demonstrated that the average enthalpy in the hot leg is less than or equal to the saturation enthalpy and the core exit quality is within the limits defined by the DNBR correlation. Appropriate functioning of the RPS ensures that for variations in the THERMAL POWER, RCS Pressure, RCS cold leg~~average~~ temperature, RCS flow rate, and ΔI that the reactor core SLs will be satisfied during steady state operation, normal operational transients, and AOOs.

NRC 156

APPLICABILITY

SL 2.1.1 only applies in MODES 1 and 2 because these are the only MODES in which the reactor is critical. Automatic protection functions are required to be OPERABLE during MODES 1 and 2 to ensure operation within the reactor core SLs. The steam generator safety valves or automatic protection actions serve to prevent RCS heatup to the reactor core SL conditions or to initiate a reactor trip function which forces the unit into MODE 3. Setpoints for the reactor trip functions are specified in LCO 3.3.1, “Reactor Trip System (RTS) Instrumentation.” In MODES 3, 4, 5, and 6, applicability is not required since the reactor is not generating significant THERMAL POWER.

SAFETY LIMIT VIOLATIONS

The following SL violation responses are applicable to the reactor core SLs. If SL 2.1.1 is violated, the requirement to go to MODE 3 places the unit in a MODE in which this SL is not applicable.

The allowed Completion Time of 1 hour recognizes the importance of bringing the unit to a MODE of operation where this SL is not applicable, and reduces the probability of fuel damage.

REFERENCES

1. 10 CFR 50, Appendix A, GDC 10.

2. Section 7.2, “Reactor Trip.”

BASES

APPLICABLE SAFETY ANALYSES, LCOs, and APPLICABILITY (continued)

15. Boron Dilution Block

The block of boron dilution is accomplished by closing the CVS suction valves to demineralized water storage tanks, and aligning the boric acid tank to the CVS makeup pumps. This Function is actuated by Source Range Neutron Flux Doubling~~Multiplication~~, Reactor Trip, and Battery Charger Input Voltage – Low.

NRC 156

NRC 156

15.a. Source Range Neutron Flux Doubling~~Multiplication~~

A signal to block boron dilution in MODES 2 or 3, when not critical or during an intentional approach to criticality, and MODES 4 or 5 is derived from source range neutron flow increasing at an excessive rate (source range flux doubling). This Function is not applicable in MODES 4 and 5 if the demineralized water makeup flowpath is isolated. The source range neutron detectors are used for this Function. The LCO requires four divisions to be OPERABLE. There are four divisions and two-out-of-four logic is used. On a coincidence of excessively increasing source range neutron flux in two of the four divisions, demineralized water is isolated from the makeup pumps and reactor coolant makeup is isolated from the reactor coolant system to preclude a boron dilution event. In MODE 6, a dilution event is precluded by the requirement in LCO 3.9.2 to close, lock and secure at least one valve in each unborated water source flow path.

15.b. Reactor Trip (Function 18.a)

Demineralized Water Makeup is also isolated by all the Functions that initiate a Reactor Trip. The isolation requirements for these Functions are the same as the requirements for the Reactor Trip Function. Therefore, the requirements are not repeated in Table 3.3.2-1. Instead Function 18.a, (P-4 Reactor Trip Breakers), is referenced for all initiating Functions and requirements.

15.c. Battery Charger Input Voltage – Low

Demineralized water is also isolated by the loss of ac power. A short, preset time delay is provide to prevent actuation upon momentary power fluctuations; however, actuation occurs before ac power is restored by the onsite diesel generators. The loss of all ac power is detected by undervoltage sensors that are connected to the input of each of the four Class 1E

BASES

APPLICABLE SAFETY ANALYSES, LCOs, and APPLICABILITY (continued)

P-4 interlock is enabled by all Automatic Reactor Trip Actuations. The Functions of the P-4 interlock are:

- Trip the main turbine

- ~~Permit the block of automatic Safeguards Actuation after a predetermined time interval following automatic Safeguards Actuation.~~

NRC 156

- Block boron dilution

- Isolate main feedwater coincident with low reactor coolant temperature (This function is not assumed in safety analysis therefore, it is not included in the technical specifications.)

The reactor trip breaker position switches that provide input to the P-4 interlock only Function to energize or de-energize or open or close contacts. Therefore, this Function has no adjustable Trip Setpoint.

This Function must be OPERABLE in MODES 1, 2, and 3 when the reactor may be critical or approaching criticality. This Function does not have to be OPERABLE in MODE 4, 5, or 6 to trip the main turbine, because the main turbine is not in operation.

The P-4 Function does not have to be OPERABLE in MODE 4 or 5 to block boron dilution, because Function 15.a, Source Range Neutron Flux Multiplication, provides the required block. In MODE 6, the P-4 interlock with the Boron Dilution Block Function is not required, since the unborated water source flow path isolation valves are locked closed in accordance with LCO 3.9.2.

18.b. Pressurizer Pressure, P-11

The P-11 interlock permits a normal unit cooldown and depressurization without Safeguards Actuation or main steam line and feedwater isolation. With pressurizer pressure channels less than the P-11 setpoint, the operator can manually block the Pressurizer pressure – Low, Steam Line Pressure – Low, and T_{cold} – Low Safeguards Actuation signals and the Steam Line Pressure – Low and T_{cold} – Low steam line

BASES

APPLICABLE SAFETY ANALYSES, LCOs, and APPLICABILITY (continued)

operator can manually block low pressurizer level signal used for these actuations. Concurrent with blocking CMT actuation on low pressurizer level, ADS 4th Stage actuation on Low 2 RCS hot leg level is enabled. Also CVS letdown isolation on Low 1 RCS hot leg level is enabled. When the pressurizer level is above the P-12 setpoint, the pressurizer level signal is automatically enabled and a confirmatory open signal is issued to the isolation valves on the CMT cold leg balance lines. This Function is required to be OPERABLE in MODES 1, 2, 3, 4, 5, and 6.

18.e. RCS Pressure, P-19

The P-19 interlock is provided to permit water solid conditions (i.e., when the pressurizer water level is >92%) in lower MODES without automatic isolation of the CVS makeup pumps. With RCS pressure below the P-19 setpoint, the operator can manually block CVS isolation on High 2 pressurizer water level. When RCS pressure is above the P-19 setpoint, this Function is automatically unblocked. This Function is required to be OPERABLE IN MODES 1, 2, 3, and 4 with the RCS not being cooled by the RNS. When the RNS is cooled by the RNS, the RNS suction relief valve provides the required overpressure protection (LCO 3.4.14).

18.f. Reactor Trip Breaker Open, P-3

Permit the block of automatic Safeguards Actuation after a predetermined time interval following automatic Safeguards Actuation.

NRC 156

The reactor trip breaker position switches that provide input to the P-3 interlock only function to energize or de-energize (open or close) contacts. Therefore, this Function does not have an adjustable Trip Setpoint.

19. Containment Air Filtration System Isolation

Some DBAs such as a LOCA may release radioactivity into the containment where the potential would exist for the radioactivity to be released to the atmosphere and exceed the acceptable site dose limits. Isolation of the Containment Air Filtration System provides protection to prevent radioactivity inside containment from being released to the atmosphere.

BASES

ACTIONS (continued)

NRC 156

Condition D applies to one inoperable required division of the P-3 & P-4 Interlocks (Function 18.a and 18.f). With one required division inoperable, the 2 remaining OPERABLE divisions are capable of providing the required interlock function, but without a single failure. The P-3 & P-4 Interlock is enabled when RTBs in two divisions are detected as open. The status of the other inoperable, non-required P-3 & P-4 division is not significant, since P-3 & P-4 divisions can not be tripped or bypassed. In order to provide single failure tolerance, 3 required divisions must be OPERABLE.

NRC 156

Condition D also applies to one inoperable division of ESF coincidence logic or ESF actuation (Functions 25 and 26). The ESF coincidence logic and ESF actuation divisions are inoperable when their associated battery-backed subsystem is inoperable. With one inoperable division, the 3 remaining OPERABLE divisions are capable of mitigating all DBAs, but without a single failure.

The 6 hours allowed to restore the inoperable division is reasonable based on the capability of the remaining OPERABLE divisions to mitigate all DBAs and the low probability of an event occurring during this interval.

E.1

Condition E is applicable to manual initiation of:

- Safeguards Actuation;
- CMT Actuation;
- Containment Isolation;
- Steam Line Isolation;
- Main Feedwater Control Valve Isolation;
- Main Feedwater Pump Trip and Valve Isolation;
- ADS Stages 1, 2, & 3 Actuation;
- ADS Stage 4 Actuation;
- Passive Containment Cooling Actuation;
- PRHR Heat Exchanger Actuation;

BASES

SURVEILLANCE REQUIREMENTS (continued)

SURVEILLANCE REQUIREMENTS

SR 3.4.8.1

This Surveillance requires verification every 12 hours that a minimum mixing flow is present in the RCS. A Frequency of 12 hours is adequate considering the low probability of an inadvertent BDE during this time, and the ease of verifying the required RCS flow.

NRC 055

~~A minimum mixing flow is provided if any of the following conditions are met:~~

~~No. of Pumps Operating~~	~~% Rated Speed (each pump)~~
~~1~~	~~25%~~
~~2~~	~~20%~~
~~3~~	~~15%~~
~~4~~	~~10%~~

REFERENCES None.

Chapter 18

Figure 18.2-3 provides a program milestone schedule of human factors engineering tasks showing relationships between human factors engineering elements and activities, products, and reviews. Internal design reviews are performed at various points throughout the design process.

18.2.6 Combined License Information

18.2.6.1 Human Factors Engineering Program

The Combined License information requested in this subsection has been fully addressed in APP-OCS-GBH-001 (Reference 8), and the applicable changes are incorporated into the DCD. No additional work is required by the Combined License applicant to address the Combined License information requested in this subsection. The work that has been done is summarized in the following paragraph:

> The AP1000 Human Factors Engineering Program Plan (Reference 8) fully captures the information certified in Section 18.2. Reference 8 provides execution guidance for the NRC-approved HFE program. The ongoing confirmation that the AP1000 HFE Program Plan is being executed as required is demonstrated by fulfillment of the other COL Information Items in Chapter 18. The final confirmation that the HFE Program Plan has been executed will be demonstrated by completion of the ITAAC (Tier 1 Material, Table 3.2-1, Items 1 to 13).

The following words represent the original Combined License Information Item commitment, which has been addressed as discussed above:

> The Combined License applicant referencing the AP1000 certified design is responsible for the execution of the NRC approved human factors engineering program as presented by Section 18.2.

18.2.6.2 Emergency Operations Facility

The Combined License information requested in this subsection has been partially addressed in Reference 9 (APP-GW-GLR-136). No additional work is required to address the information as delineated in the following paragraph:~~applicant referencing the AP1000 certified design is responsible for designing the emergency operations facility, including specification of the location and communication with the facility, in accordance with the AP1000 human factors engineering program.~~

NRC 152

> Reference 9 captures the method by which the AP1000 Human Factors Engineering Program Plan (Reference 8) will be applied to TSCs and EOFs that support an AP1000 plan.

The following activities are to be addressed by the Combined License applicant:

> Specific information regarding the location of the emergency operations facility and emergency operations facility communications will be provided by the Combined Operating License applicant to address the Combined License information requested in this subsection.

The following words represent the original Combined License Information Item commitment, which has been addressed as discussed above.

NRC 152

Combined License applicants referencing the AP1000 certified design are responsible for designing the emergency operations facility, including specification of the location and communication with the facility, in accordance with the AP1000 human factors engineering program.

18.2.7 References

[1. *NUREG-0711, "Human Factors Engineering Program Review Model," U.S. NRC, July 1994.*]*

2. WCAP-14645, "Human Factors Engineering Operating Experience Review Report For The AP600 Nuclear Power Plant," Revision 2, December 1996.

3. WCAP-14694, "Designers Input to Determination of the AP600 Main Control Room Staffing Level," Revision 0, July 1996.

4. WCAP-14644, "AP600 Functional Requirements Analysis and Allocation," Revision 0, September 1996.

5. Reason, J. T., "Human Error," Cambridge, U.K., Cambridge University Press, 1990.

[6. *WCAP-15847, "AP1000 Quality Assurance Procedures Supporting NRC Review of AP1000 DCD Sections 18.2 and 18.8," Revision 1, December 2002.*]*

[7. *NUREG-0711, Rev. 1, "Human Factors Engineering Program Review Model," U.S. NRC, May 2002.*]*

8. APP-OCS-GBH-001, "AP1000 Human Factors Engineering Program Plan," Westinghouse Electric Company LLC.

NRC 152

9. APP-GW-GLR-136, "AP1000 Human Factors Program Implementation for the Emergency Operations Facility and Technical Support Center."

*NRC Staff approval is required prior to implementing a change in this information; see DCD Introduction Section 3.5.

NRC 065

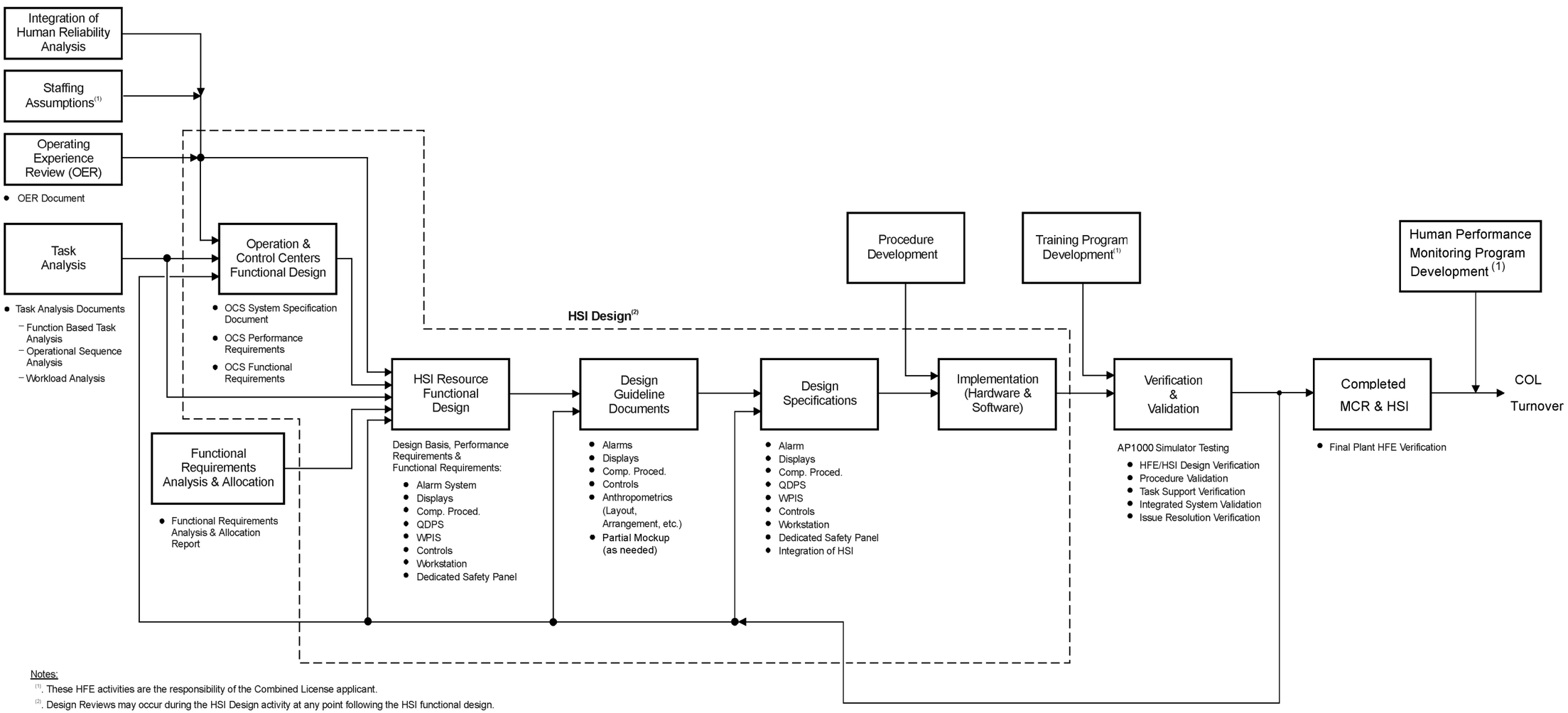

Notes:

(1). These HFE activities are the responsibility of the Combined License applicant.

(2). Design Reviews may occur during the HSI Design activity at any point following the HSI functional design.

Figure 18.2-3

Overview of the AP1000 Human Factors Engineering Process

Chapter 19

19.58 Winds, Floods, and Other External Events

19.58.1 Introduction

External events considered in the AP1000 PRA are those events whose cause is external to all systems associated with normal and emergency operations situations. Some external events may not pose a significant threat of a severe accident. Some external events are considered at the design stage and have a sufficiently low contribution to core damage frequency or plant risk.

Based upon the guidelines provided in References 19.58-1 and 19.58-2, the following is a list of five external events that are included for AP1000 analysis:

- High winds and tornadoes
- External floods
- Transportation and nearby facility accidents
- Seismic events
- Internal fires

The first three external events are addressed in this section. Seismic events and internal fires are addressed in the AP1000 PRA.

Chapter 2 defines the site characteristics for which the AP1000 is designed. A site is acceptable if the site characteristics fall within the AP1000 site interface parameters.

19.58.2 External Events Analysis

19.58.2.1 Severe Winds and Tornadoes

The overall methodology recommended by NUREG-1407 for analyzing plant risk due to high winds and tornados is a progressive screening approach. This approach is modified to consider determining the acceptability of hazard frequency and risk. High winds (including tornadoes) can affect plant structures in at least two ways: (1) if wind forces exceed the load capacity of a building or other external facility, the walls or framing might collapse or the structure might overturn from the excessive loading; and (2) if the wind is strong enough, as in a tornado or hurricane, it may be capable of lifting materials and thrusting them as missiles against the plant structures that house safety-related equipment. Critical components or other contents of plant structures not designed to resist missile penetration might be damaged and lose their function.

The NUREG-1407 criterion for high winds and tornados states that "these events pose no significant threat of a severe accident because the current design criteria for wind are dominated by tornadoes having an annual frequency of exceedance of about 10^{-7}." This is interpreted to mean that events with an annual frequency of exceedance less than 1.0E-07~~10^{-7}~~ may be removed from further consideration and events with an annual frequency of exceedance greater than 1.0E-07~~10^{-7}~~ must be further evaluated. However, the NUREG-1407 criterion was developed for currently operating plants.

NRC 170

tornados do exceed the operating basis of the AP1000. Per the Saffir-Simpson Scale for Hurricanes (Table 19.58-2), no hurricanes are expected to reach 300 mph winds; however, NRC 170 Category 3, Category 4 and Category 5 hurricane winds do exceed the operating basis of the AP1000.

Three studies are performed to evaluate the high wind events. The Case 1 study is a LOSP induced by each of the events, with no other equipment unavailable. A conditional core damage probability (CCDP) is developed for this scenario, which may be multiplied by the high wind event frequency. All tornados and hurricanes are considered in this Case 1 as they may challenge the AP1000 switchyard. Extratropical cyclones are normal storms and thunderstorms with winds expected to fall below the operating basis for the AP1000. They are also included in the Case 1 analysis.

NRC 170 As stated above, the EF3, EF4, and EF5 tornados and Category 3, Category 4 and Category 5 hurricanes may challenge the nonsafety-related structures in the AP1000. Therefore, these events will be evaluated with the loss of additional SSCs. The Case 2 study is created by modifying the NRC 170 Case 1 analysis for the EF3, EF4, and EF5 tornados, and Category 3, Category 4 and Category 5 hurricanes to have a LOSP with additional failures of nonsafety systems unavailable. A CCDP is developed for this scenario, which may be multiplied by the high wind event frequency.

The final Case 3 is a conservative study where all high wind events are evaluated as a LOSP with failure of the nonsafety systems. This case is created to represent the worst case scenario unavailable. In this analysis, events are considered of low risk importance if their initiating event NRC 170 frequency is less than 1.0E-07~~10^{-7}~~ or if their estimated CDF is less than ~~10% of the total plant CDF. Therefore, the CDF screening values is 5.08~~1.0E-08 events/yr.

The results of the CDF calculation are shown in Table 19.58-3. Equation 19.58-1 was used to determine the resultant CDF.

NRC 170 In ~~that t~~Table 19.58-3, none of the initiating event frequencies were sufficiently low to be removed from further consideration. Therefore, the CDF calculation was performed. In each case, NRC 170 the resultant CDF is less than ~~10% of the total plant CDF, 5.08~~1.0E-08 events/yr. The Category 4 and Category 5 hurricane frequency is considered to be extremely conservative at 1.00E-02 events/yr. An event with the conservative initiating event frequency, and the worst case sensitivity study (Case 3), the resultant CDF is still less than the CDF criterion of ~~5.08~~1.0E-08 events/yr. Case 2 is considered to be the representative model for high winds, with Case 1 and Case 3 being treated as sensitivity studies on the baseline. Case 3 is conservative in that it assumes total failure NRC 170 of the standby non-safety systems (CVS, RNS, SFW, automatic DAS, and diesel generators) for all high wind events. As AP1000 non-safety structures have been designed to a building code that offers an added level of protection, the above failures are considered extreme and conservative. Therefore, while the total Case 3 CDF does fall above the 1.0E-08 events/yr CDF screening criteria, the results are considered very conservative for the above reasons.~~Furthermore, the sum of the estimated CDF for each case falls below the CDF criterion of 5.08E-08/yr.~~ Therefore, no further detailed PRA is necessary for the AP1000 high winds and tornados analysis.

19.58.2.2 External Floods

An external flooding analysis is performed to verify that any significant contribution to core damage frequency – resulting from plant damage caused by storms, dam failure, and flash floods – is accounted for as follows:

NRC 170

The analysis for external floods begins with an examination of the design basis for the plant, which is documented in Chapter 2 of the AP1000 DCD. The AP1000 is protected against floods up to the 100′ level. The 100′ level corresponds to the plant ground level. From this point, the ground is graded away from the structures. Thus, water will naturally flow away from the structures. Additionally, all seismic Category I SSCs are designed to withstand the effects of flooding. The seismic Category I SSCs below grade (below ground level) are protected against flooding by a water barrier consisting of water stops and a waterproofing system. None of the non-safety SSCs were found to be important based on flooding considerations. ~~The AP1000 is designed against flood levels less than plant elevation 100 feet.~~

The basic steps involved in an external flooding analysis are similar to those followed for internal flooding in the individual plant examination. However, the focus of attention is on areas, which due to their location and grading, may be susceptible to external flood damage. This requires information on such items as dikes, surface grading, locations of structures, and locations of equipment within the structures. Information such as meteorological data for the site, historical flood height, and frequency data, is also needed.

NRC 170

Only one site indicated susceptibility to external floods, due to hurricane surge water. That site is located at an elevation of 45 feet above sea level. Therefore, the AP1000 100′ level, for this site, corresponds to 45′ above sea level. Per DCD Chapter 3.4.1.1, the ground will be graded away from the structures beginning at the 100′ level and sloping downward away from the structures. The Saffir-Simpson hurricane scale notes that Category 5 hurricanes have the ability to generate storm surges in excess of 18 feet. Hurricane Camille (1969) generated a storm surge of 25 feet along the Mississippi Gulf Coast.

~~Category 5 hurricanes, per the Saffir-Simpson scale, are capable of storm surges greater than 18 feet. However, the probability of generating a storm surge of 18 feet, combined with the frequency of a Category 5 hurricane, results in a small event frequency. Even conservatively assuming a storm surge of 18 feet, the frequency of an event capable of generating this storm surge is small. Engineering judgment is used to establish that the frequency of this type of flood is significantly less than the 10^{-7} per year criterion for initiating event frequency.~~Based on the description of a Category 5 hurricane in the Saffir-Simpson hurricane scale, a hurricane storm surge in excess of 18 feet may be classified as an extremely rare event. The ASME has recently approved changes to the ASME PRA Standard to assign a value to an "extremely rare event." That value is defined as 1E-06/year for currently operating plants. Recognizing that the AP1000 design provides additional levels of safety, TR-101 suggests a value of 1E-07/year to define an extremely rare event for the AP1000 design.

As a sensitivity study, the 1.0E-07~~10^{-7}~~/yr initiating event frequency is taken as the frequency of an event that may challenge the nonsafety structures in the plant. This sensitivity study also considers

failure of the switchyard due to flooding. LOSP with failure of the nonsafety systems CCDP was developed. Equation 1 was used to determine the resultant CDF.

As expected, the risk due to a flooding event is low for the AP1000. The resultant CDF of 5.85E-15/yr is an insignificant contribution to total plant CDF.

For other sites, the AP1000 is designed to site characteristics described in Chapter 2. The site selection criterion provides that for an accident that has potential consequences serious enough to affect the safety of the plant to the extent that 10 CFR 100 guidelines are exceeded, the annual frequency of occurrence is less than 1.0E-06~~10^{-6}~~ per year. ~~To consider the already low risk of the AP1000 design,~~ This criterion should be extended to an annual frequency of occurrence less than 1.0E-07~~10^{-7}~~ per year for the AP1000 design. As none of the surveyed sites indicated susceptibility to floods due to dam failure and/or flash floods, those events should be considered on a site-by-site basis.

NRC 170

19.58.2.3 Transportation and Nearby Facility Accidents

These events consist of accidents related to transportation near the nuclear power plant and accidents at industrial and military facilities in the vicinity. The following modes of transportation are considered:

- Aviation (commercial/general/military)
- Marine (ship/barge)
- Pipeline (gas/oil)
- Railroad
- Truck

19.58.2.3.1 Aviation Accidents

For limiting event frequency of 1.21E-06/year with most of that frequency for small aircraft, and with commercial aircraft contribution 9.40E-09/year, then the following discussion is applicable.

A conservative analysis was performed to evaluate the risk due to small aircraft accidents onsite. This analysis assumes a LOSP and loss of component cooling water/service water event, and conservatively fail a set of standby nonsafety systems. This is acceptable because it is unlikely that a small aircraft accident would challenge the passive safety systems inside containment. This leaves only the nonsafety systems outside containment as vulnerable. However, this evaluation is conservative because it is unlikely that a small aircraft would have the capacity to fail such a large area of the AP1000.

Equation 19.58-1 is used to determine the resultant CDF. A CDF of 7.08E-14/yr is calculated and is an insignificant contribution to total plant CDF of approximately 5.08E-07/yr. Therefore, sites that can demonstrate an aviation event frequency less than or equal to 1.21E-06/yr for small aircraft accidents are bounded by this evaluation.

Larger commercial aircraft may have the capacity to challenge SSCs within the AP1000 containment. However, the containment structure and safety systems are designed to withstand

NRC 170

NRC 170

various earthquake levels so that many of the safety system SSCs will still be available following the accident. To consider the already low risk of the AP1000 design, the 1.0E-07~~10^{-7}~~ events/yr criterion for event frequency is applicable for larger commercial aircraft. Sites that can demonstrate a commercial aircraft aviation event frequency less than the 1.0E-07~~10^{-7}~~/yr criterion are also bounded by this analysis. For this current evaluation, the highest initiating event frequency reported for large commercial aircraft is 9.40E-09 events/yr. This value falls below the 1.0E-07 events/yr screening criteria. Therefore, no further evaluation is necessary.

19.58.2.3.2 Marine Accidents

Only sites with large waterways with ship and/or barge traffic that goes through or near the site need to consider marine accidents.

Marine accidents involving ship or barge accidents pose a potential hazard to a nuclear power plant due to two possibilities:

1. Release of hazardous material towards the plant
2. Explosion with resulting damage to the plant

The potential exists for a marine accident that leads to a release of toxic materials into the atmosphere. This type of event may compromise the safety of the plant operators, resulting in reduced operator reliability. However, the toxic release does not directly lead to any failure of plant equipment. To evaluate the risk impact of this scenario, a CCDP is developed that models a reactor trip followed by the guaranteed failure of all PRA credited operator actions. The resulting CCDP is 6.26E-08. The bounding initiating event frequency is 1.0E-06/yr.

Equation 19.58-1 is used to determine the resultant CDF. The resultant CDF is 6.26E-14/yr. The results indicate a low estimated CDF contribution due to toxic releases from a marine accident.

The above analysis is conservative. The AP1000 has an additional level of defense against toxic airborne material. With advanced warning, the operators may actuate passive control room habitability. This system isolates the control room from normal HVAC and actuates a separate system supplied from compressed air containers. The compressed air slightly pressurizes the control room above atmospheric pressure, preventing the entrance of toxic material in the control room. This system is available for 72 hours, which is adequate time to withstand the event.

There is also a potential for marine explosion accidents. The AP1000 is not designed with a service water intake structure. Therefore, loss of service water events as a consequence of marine explosions are not a concern for the AP1000 design. As long as Regulatory Guide 1.91 acceptance criterion is met, marine explosion accidents do not need to be considered further for the AP1000 PRA.

19.58.2.3.3 Pipeline Accidents

Pipeline accidents could pose a hazard to the AP1000 due to the release of hazardous material or the possibility of an explosion and resulting damage to the plant. For a site with a 30-inch gas line approximately 5800 feet away, a semi-quantitative evaluation is performed.

Considerations for the evaluation are as follows:

- Gas pipe rupture frequency
- Gas cloud formation probability
- Gas cloud transportation and nondispersion probability
- Gas cloud ignition probability onsite

Figure 19.58-1 is considered to further evaluate the probability of this accident. When then considering the probability of forming a dense gas cloud, and the probability of the wind speed and direction to be in the ranges necessary to transport the gas cloud 5800 feet to the site, without dispersing the gas, including ignition of the gas cloud onsite in a location that may challenge the plant, this probability becomes very low.

Site habitability is also a concern for toxic materials. However, the AP1000 has an additional level of defense against toxic airborne material. With advanced warning, the operators may actuate passive control room habitability. This system isolates the control room from normal HVAC and actuates a separate system supplied from compressed air containers. The compressed air slightly pressurizes the control room above atmospheric pressure, preventing the entrance of toxic material in the control room. This system is available for 72 hours, which is adequate time to withstand the event. The expected frequency value is expected to be below the initiating event criterion of
NRC 170 1.0E-07~~10^{-7}~~ events/year. Therefore, no further quantitative evaluation is necessary.

19.58.2.3.4 Railroad and Truck Accidents

Railroad accidents could pose a hazard to the AP1000 due to the release of hazardous material or the possibility of an explosion and resulting damage to the plant. Toxic material releases were evaluated in the marine accident evaluation as to not be important to AP1000 plant risk. Significant damage to the AP1000 plant was evaluated in the aviation accident evaluation. No railroad accidents are expected to result in the amount of damage that may be seen from an aviation accident. This is especially true considering the increased security barriers established at U.S. nuclear power plants.

The AP1000 is designed to site characteristics described in Chapter 2. The site selection criterion provides that, for an accident that has potential consequences serious enough to affect the safety of the plant to the extent that 10 CFR 100 guidelines are exceeded, the annual frequency of
NRC 170 occurrence is less than 1.0E-06~~10^{-6}~~ per year. ~~As explained in Chapter 2, t~~This criterion should be extended to an annual frequency of occurrence less than ~~10^{-7}~~1.0E-07 per year for the AP1000 design.

19.58.3 Conclusion

The risk due to external hazards is low for the AP1000 design for the participating sites listed in Section 3.2. The AP1000 design is shown to be highly robust against the external events discussed in this section. The design is resilient against high winds, external floods, and other external events that challenge various equipment in the plant.

The following conclusions and insights are derived from the AP1000 external events assessment for events at power:

1. High winds and tornados were quantitative evaluated to be of low risk to the AP1000 design for each of the participating sites. A bounding assessment is provided to show that the expected CDF due to any one of these events does not exceed~~s 10% of the total plant CDF (5~~1.0~~8~~E-08 events/year~~)~~. The same is true for the aggregate results. Sensitivity studies were performed to determine that there is low risk for more limiting scenarios. No further analysis is suggested.

NRC 170

2. The AP1000 is designed to flooding levels described in Chapter 2. The site selection criterion provides that, for an accident that has potential consequences serious enough to affect the safety of the plant to the extent that 10 CFR 100 guidelines are exceeded, the annual frequency of occurrence is less than ~~10^{-6}~~1.0E-06 per year. ~~As explained in Section 4.1, t~~This criterion can be extended to an annual frequency of occurrence less than ~~10^{-7}~~1.0E-07 per year for the AP1000 design. No further analysis is suggested.

NRC 170

3. Transportation and nearby facilities accidents are qualitatively evaluated to be of low risk importance and do not warrant further evaluation.

19.58.4 References

19.58-1 "Individual Plant Examination of External Events (IPEEE) for Severe Accident Vulnerabilities - 10 CFR 50.54(f)," Generic Letter 88-20, Supplement 4, June 28, 1991.

19.58-2 NUREG-1407, "Procedural and Submittal Guidance for the Individual Plant Examination of External Events (IPEEE) for Severe Accident Vulnerabilities," June 1991.

19.58-3 National Weather Service, "The Enhanced Fujita Scale," February 2, 2007, http://www.spc.noaa.gov/efscale/.

19.58-4 National Weather Service, "The Saffir-Simpson Hurricane Scale," June 22, 2006, http://www.nhc.noaa.gov/aboutsshs.shtml.

19.58-5 U.S. Nuclear Regulatory Commission Regulatory Guide 1.91, "Evaluation of Explosions Postulated to Occur on Transportation Routes Near Nuclear Power Plants," Revision 1, February 1978.

Table 19.58-3

HIGH WINDS AND TORNADOS RESULTS

Category	Event	Limiting Initiating Event Freq. (/yr)	CDF (/yr)		
			LOSP (Case 1) (/yr)	LOSP with Nonsafety Systems Unavailable for Select Events (Case 2) (/yr)	LOSP with Nonsafety Systems Unavailable for All Events (Case 3) (/yr)
High Winds	EF0 Tornado	1.00E-03~~8.00E-05~~	9.81E-12~~7.85E-13~~	9.81E-12 ~~7.85E-13~~(1)	5.85E-11~~4.68E-12~~
	EF1 Tornado	1.00E-03~~8.00E-05~~	9.81E-12~~7.85E-13~~	9.81E-12 ~~7.85E-13~~(1)	5.85E-11~~4.68E-12~~
	EF2 Tornado	1.00E-03~~1.60E-04~~	9.81E-12~~1.57E-12~~	9.81E-12 ~~1.57E-12~~(1)	5.85E-11~~9.36E-12~~
	EF3 Tornado	1.00E-03~~8.00E-05~~	9.81E-12~~7.85E-13~~	5.85E-11 ~~7.85E-13~~(1)	5.85E-11~~4.68E-12~~
	EF4 Tornado	1.00E-03~~8.00E-05~~	9.81E-12~~7.85E-13~~	5.85E-11 ~~7.85E-13~~(1)	5.85E-11~~4.68E-12~~
	EF5 Tornado	1.00E-03~~8.00E-05~~	9.81E-12~~7.85E-13~~	5.85E-11 ~~4.68E-12~~	5.85E-11~~4.68E-12~~
	Cat. 1 Hurricane	1.00E-01	9.81E-10	9.81E-10(1)	5.85E-09
	Cat. 2 Hurricane	5.00E-02	4.91E-10~~2.94E-10~~	4.91E-10~~2.94E-10~~(1)	2.93E-09
	Cat. 3 Hurricane	3.00E-02	2.94E-10	1.76E-09~~2.94E-10~~(1	1.76E-09
	Cat. 4 Hurricane	1.00E-02	9.81E-11	5.85E-10	5.85E-10
	Cat. 5 Hurricane	1.00E-02	9.81E-11	5.85E-10	5.85E-10
	Extratropical Cyclones	3.00E-02	2.94E-10	2.94E-10(1)	1.76E-09
Totals			2.32E-09~~2.07E-09~~	4.90E-09~~3.05E-09~~	1.38E-08~~1. 35E-08~~

Note:

1. CDF values from Case 1 were used to illustrate the winds from these events will not challenge additional plant SSCs.

Table 19.59-18 (Sheet 23 of 24)

AP1000 PRA-BASED INSIGHTS

Insight	Disposition
68. The startup feedwater system pumps provide feedwater to the steam generator. This capability provides an alternate core cooling mechanism to the PRHR heat exchangers for non-LOCA or steam generator tube ruptures. The startup feedwater pumps are included in the D-RAP.	17.4
69. Capability is provided for on-line testing and calibration of the DAS channels, including sensors.	7.7.1.11
Short-term availability controls of the DAS during at-power conditions reduce PRA uncertainties.	16.3
70. One CVS pump is configured to operate on demand while the other CVS pump is in standby. The operation of these pumps will alternate periodically.	9.3.6.3.1 & 19.15
NRC 159 On a source range flux doubling signal, the PMS automatically closes two safety-related CVS makeup line isolation valves, closes two safety-related CVS demineralized water suction valves to the makeup pumps and trips the makeup pumps. On a reactor trip or low input voltage to the Class 1E dc power system battery chargers, the PMS closes the two safety-related CVS demineralized water suction valves to the makeup pumps and aligns the makeup pump suction to the boric acid tank.~~The safety-related PMS boron dilution signal automatically re-aligns CVS pump suction to the boric acid tank. This signal also closes the two safety-related CVS demineralized water supply valves. This signal actuates on reactor trip signal (interlock P-4), source range flux doubling signal, or low input voltage to the Class 1E dc power system battery chargers.~~	7.3.1.2.14
71. Proceduress will be prepared to respond to low hot leg level alarms.	Emergency Response Guidelines
72. The containment recirculation screens are configured such that the chance of clogging is minimized during operation following accidents at power and at shutdown. The configuration features that reduce the chance of clogging include: - Redundant screens are provided and located in separate locations - Bottom of screens are located well above the lowest containment level as well as the floors around them - Top of screens are located well below the containment floodup level - Screens have protective plates that are located close to the top of the screens and extend out in front and to the side of the screens - Screens have conservative flow areas to account for plugging. Adequate PXS performance can be supported by one screen with at least 90% of its surface area completely blocked	6.3.2

APP-GW-GLR-134

Revision 1

Attachment A

Tier 1 and 2

APP-GW-GLR-134
Revision 1

Attachment A

AP1000 DCD Impact Report

APP-GW-GL-700, Revision 16, "AP1000 Design Control Document"

DCD Section	*Westinghouse Status*	*Tracking Number*	*DCD Category*	*Change Criteria*
Tier 1 - 1.2, 5.0, 5.0-1, 5.0-3, 5.0-4	**Accepted for Revision 17 of the DCD and Revision 1 of TR 134**	**NRC190**	**Tier 1**	**Requires Prior NRC Approval**

Description:

Incorporate DCD changes into TR134 to address seismic changes identified in TR 144 which are, Tier 1 changes related to the seismic design spectra to provide conformance with previous DCD Tier 2 changes to address hard rock high frequency exceedances. Additional conforming changes to DCD Tier 2 are also provided.

Reference Information:

APP-GW-GLR-144, Rev 0

Attachment A

AP1000 DCD Impact Report

APP-GW-GL-700, Revision 16, "AP1000 Design Control Document"

DCD Section	*Westinghouse Status*	*Tracking Number*	*DCD Category*	*Change Criteria*
Tier 2 - Table 2-1, 3.10, 3.10.7, 3I.1-1, 3I.1-2	**Accepted for Revision 17 of the DCD and Revision 1 of TR 134**	**NRC191**	**Tier 2**	**NRC Prior Approval Not Required**

Description:

Incorporate DCD changes into TR134 to address seismic changes identified in TR 144 which are, Tier 1 changes related to the seismic design spectra to provide conformance with previous DCD Tier 2 changes to address hard rock high frequency exceedances. Additional conforming changes to DCD Tier 2 are also provided.

Reference Information:

APP-GW-GLR-144, Rev 0

Attachment B

DCD Markup Pages

APP-GW-GLR-134
Revision 1

inspection reports, analysis reports, evaluation reports, design and manufacturing procedures, certified data sheets, commercial dedication procedures and records, quality assurance records, calculation notes, and equipment qualification data packages. For plants at sites which are qualified using the Hard Rock High Frequency GMRS high frequency seismic testing required as a result of the elevation of potential high frequency sensitive components is included in the equipment qualification data packages.

NRC 190

Many entries in the ITA column of the ITAAC tables include the words "Inspection will be performed for the existence of a report verifying…" When these words are used it indicates that the ITA is tests, type tests, analyses, or a combination of tests, type tests, and analyses and a report will be produced documenting the results. This report will be available to inspectors.

Many ITAAC are only a reference to another Tier 1 location, either a section, subsection, or ITAAC table entry (for example, "See Tier 1 Material…"). A reference to another ITAAC location is always in both the ITA and acceptance criteria columns for a design commitment. This reference is an indication that the ITA and acceptance criteria for that design commitment are satisfied when the referenced ITA are completed and the acceptance criteria for the referenced Tier 1 sections, subsections, or table entries are satisfied. If a complete Tier 1 section is referenced, this indicates that all the ITA and acceptance criteria in that section must be met before the referencing design commitment is satisfied.

Discussion of Matters Related to Operations

In some cases, the design descriptions in this document refer to matters that relate to operation, such as normal valve or breaker alignment during normal operation modes. Such discussions are provided solely to place the design description provisions in context (for example, to explain automatic features for opening or closing valves or breakers upon off-normal conditions). Such discussions shall not be construed as requiring operators during operation to take any particular action (for example, to maintain valves or breakers in a particular position during normal operation).

Interpretation of Figures

In many but not all cases, the design descriptions in Section 2 include one or more figures. The figures may represent a functional diagram, general structural representation, or another general illustration. For instrumentation and control (I&C) systems, figures may also represent aspects of the relevant logic of the system or part of the system. Unless specified explicitly, the figures are not indicative of the scale, location, dimensions, shape, or spatial relationships of as-built structures, systems, and components. In particular, the as-built attributes of structures, systems, and components may vary from the attributes depicted on the figures, provided that those safety functions discussed in the design description pertaining to the figure are not adversely affected.

Maximum Reactor Core Thermal Power

The initial rated reactor core thermal power for the AP1000 certified design is 3400 megawatts thermal (MWt).

5.0 Site Parameters

Table 5.0-1 identifies the key site parameters that are specified for the design of safety-related aspects of structures, systems, and components for the AP1000. An actual site is acceptable if its site characteristics fall within the AP1000 plant site design parameters in Table 5.0-1.

NRC 190 Structures, systems, and components for the AP1000 are evaluated for generic Ground Motion Response Spectra (GMRS) with high frequency seismic input at a site where the nuclear island is founded on hard rock. The spectra shown in Figure 5.0-3 and Figure 5.0-4 provide hard rock high frequency (HRHF) GMRS at the foundation level for both the horizontal and vertical directions for 5% damping. An actual site is acceptable if its site specific GMRS fall within the AP1000 HRHF parameters in Figures 5.0-3 and 5.0-4. No additional design or analyses are required for the structures, systems, and components for sites that fall within the AP1000 HRHF parameters.

Table 5.0-1 (cont.)
Site Parameters

Soil	
Average Allowable Static Soil Bearing Capacity	Greater than or equal to 8,600 lb/ft^2 over the footprint of the nuclear island at its excavation depth
Maximum Allowable Dynamic Bearing Capacity for Normal Plus Safe Shutdown Earthquake (SSE)	Greater than or equal to 35,000 lb/ft^2 at the edge of the nuclear island at its excavation depth
Lateral Variability	Soils supporting the nuclear island should not have extreme variations in subgrade stiffness. Case 1: For a layer with a low strain shear wave velocity greater than or equal to 2500 feet per second, the layer should have approximately uniform thickness, should have a dip not greater than 20 degrees, and should have less than 20 percent variation in the shear wave velocity from the average velocity in any layer. Case 2: For a layer with a low strain shear wave velocity less than 2500 feet per second, the layer should have approximately uniform thickness, should have a dip not greater than 20 degrees, and should have less than 10 percent variation in the shear wave velocity from the average velocity in any layer.
Shear Wave Velocity	Greater than or equal to 1000 ft/sec based on low-strain, best-estimate soil properties over the footprint of the nuclear island at its excavation depth
Liquefaction Potential	None
Seismic	
SSE	SSE free field peak ground acceleration of 0.30 g with modified Regulatory Guide 1.60 response spectra (See Figures 5.0-1 and 5.0-2.). Seismic input is defined at finished grade except for sites where the nuclear island is founded on hard rock. The hard rock high frequency (HRHF) ground motion spectra (GMRS) are shown in Figure 5.0-3 and Figure 5.0-4 defined at the foundation level for 5% damping. The HRHF GMRS provide an alternative set of spectra for evaluation of site specific GMRS. A site is acceptable if its site specific GMRS fall within the AP1000 HRHF GMRS.
Fault Displacement Potential	Neglibible~~None~~

NRC 190

NRC 190

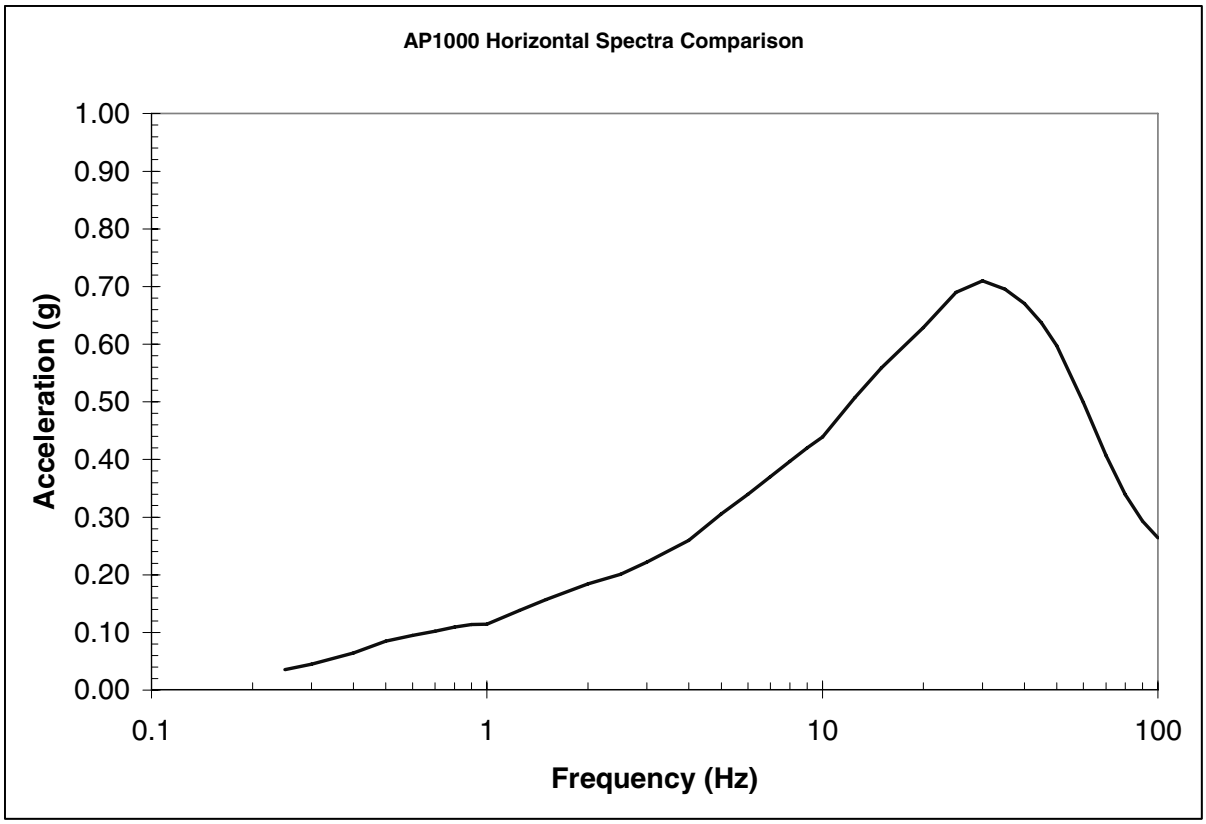

Figure 5.0-3
Horizontal HRHF GMRS
Safe Shutdown Earthquake

NRC 190

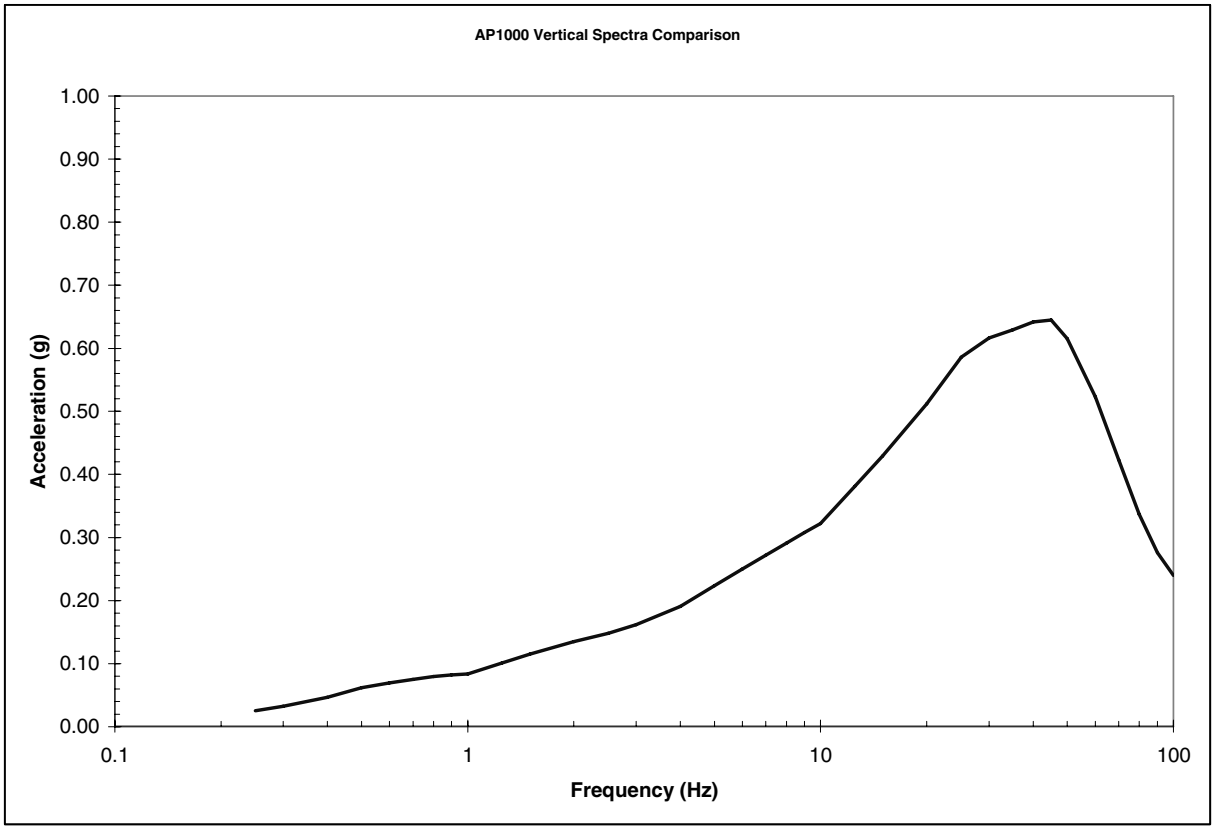

Figure 5.0-4
Vertical HRHF GRMS
Safe Shutdown Earthquake

Table 2-1 (Sheet 1 of 3)

SITE PARAMETERS

Air Temperature	
Maximum Safety [a]	115°F dry bulb/80°F coincident wet bulb 85.5°F wet bulb (noncoincident)
Minimum Safety [a]	-40°F
Maximum Normal [b]	100°F dry bulb/80.1°F coincident wet bulb 80.1°F wet bulb (noncoincident) [d]
Minimum Normal [b]	-10°F
Wind Speed	
Operating Basis	145 mph (3 second gust); importance factor 1.15 (safety), 1.0 (nonsafety); exposure C; topographic factor 1.0
Tornado	300 mph
Seismic	
SSE	0.30g peak ground acceleration [c][f]
Fault Displacement Potential	Negligible
Soil	
Average Allowable Static Bearing Capacity	Greater than or equal to 8,600 lb/ft^2 over the footprint of the nuclear island at its excavation depth
Maximum Allowable Dynamic Bearing Capacity for Normal Plus SSE	Greater than or equal to 35,000 lb/ft^2 at the edge of the nuclear island at its excavation depth
Shear Wave Velocity	Greater than or equal to 1,000 ft/sec based on low-strain best-estimate soil properties over the footprint of the nuclear island at its excavation depth
Lateral Variability	Soils supporting the nuclear island should not have extreme variations in subgrade stiffness
	Case 1: For a layer with a low strain shear wave velocity greater than or equal to 2500 feet per second, the layer should have approximately uniform thickness, should have a dip not greater than 20 degrees, and should have less than 20 percent variation in the shear wave velocity from the average velocity in any layer.
	Case 2: For a layer with a low strain shear wave velocity less than 2500 feet per second, the layer should have approximately uniform thickness, should have a dip not greater than 20 degrees, and should have less than 10 percent variation in the shear wave velocity from the average velocity in any layer (see subsection 2.5.4.5).

NRC 191

Table 2-1 (Sheet 2 of 3)

SITE PARAMETERS

Liquefaction Potential	None
Minimum Soil Angle of Internal Friction	Greater than or equal to 35 degrees below footprint of nuclear island at its excavation depth
Missiles	
Tornado	4000 - lb automobile at 105 mph horizontal, 74 mph vertical 275 - lb, 8 in. shell at 105 mph horizontal, 74 mph vertical 1 inch diameter steel ball at 105 mph horizontal and vertical
Flood Level	Less than plant elevation 100′
Ground Water Level	Less than plant elevation 98′
Plant Grade Elevation	Less than plant elevation 100′ except for portion at a higher elevation adjacent to the annex building
Precipitation	
Rain	19.4 in./hr (6.3 in./5 min)
Snow/Ice	75 pounds per square foot on ground with exposure factor of 1.0 and importance factors of 1.2 (safety) and 1.0 (non-safety)
Atmospheric Dispersion Values - χ/Q[(e)]	
Site boundary (0-2 hr)	$\leq 1.0 \times 10^{-3}$ sec/m^3
Site boundary (annual average)	$\leq 2.0 \times 10^{-5}$ sec/m^3
Low population zone boundary	
0 - 8 hr	$\leq 5.0 \times 10^{-4}$ sec/m^3
8 - 24 hr	$\leq 3.0 \times 10^{-4}$ sec/m^3
24 - 96 hr	$\leq 1.5 \times 10^{-4}$ sec/m^3
96 - 720 hr	$\leq 8.0 \times 10^{-5}$ sec/m^3
Population Distribution	
Exclusion area (site)	0.5 mi

Notes:

(a) Maximum and minimum safety values are based on historical data and exclude peaks of less than 2 hours duration.

(b) Maximum and minimum normal values are the 1 percent exceedance magnitudes.

(c) With ground response spectra as given in Figures 3.7.1-1 and 3.7.1-2. Seismic input is defined at finished grade except for sites where the nuclear island is founded on hard rock.

(d) The noncoincident wet bulb temperature is applicable to the cooling tower only.

(e) For AP1000, the terms "site boundary" and "exclusion area boundary" are used interchangeably. Thus, the χ/Q specified for the site boundary applies whenever a discussion refers to the exclusion area boundary.

NRC 191 (f) Sites that fall within the hard rock high frequency GMRS given in Figure 3I.1-1 and Figure 3I.1-2 are acceptable.

3.10 Seismic and Dynamic Qualification of Seismic Category I Mechanical and Electrical Equipment

Safety-related equipment and selected portions of post-accident monitoring equipment are classified as seismic Category I, as discussed in subsection 3.2.1.1. This section addresses the seismic and dynamic qualification of this equipment other than piping and includes the following types:

- Safety-related instrumentation and electrical equipment and certain monitoring equipment.
- Safety-related active mechanical equipment that performs a mechanical motion while accomplishing a system safety-related function. These devices include the control rod drive mechanisms; HVAC and fluid system valves.
- Safety-related, nonactive mechanical equipment whose mechanical motion is not required while accomplishing a system safety-related function, but whose structural integrity must be maintained in order to fulfill its design safety-related function.

This section presents or references information to demonstrate that mechanical equipment, electrical equipment, instrumentation, and, where applicable, their supports classified as seismic Category I are capable of performing their designated safety-related functions under the full range of normal and accident (including seismic) loadings. This equipment includes devices associated with systems essential to safe shutdown, containment isolation, reactor core cooling, and containment and reactor heat removal, or are otherwise essential in preventing significant release of radioactive material to the environment or in mitigating the consequences of accidents. The information presented or referenced includes:

- Identification of the seismic Category I instrumentation, electrical equipment, and appropriate mechanical equipment
- Qualification criteria employed for each type of equipment
- Designated safety-related functional requirements
- Definition of the applicable seismic environment
- Definition of other normal and accident loadings
- Documentation of the qualification process employed to demonstrate the required structural integrity and operability of mechanical and electrical equipment and instrumentation in the event of a safe shutdown earthquake (SSE) after a number of postulated occurrences of an earthquake smaller than a safe shutdown earthquake in combination with other relevant dynamic and static loads.

NRC 191

The AP1000 plant is based on the Certified Seismic Design Response Spectra (CSDRS) defined in subsection 3.7.1.1. The CSDRS are based on Regulatory Guide 1.60 design response spectra with an increase in the 25 hertz region. The Ground Motion Response Spectra (GMRS) for some

NRC 191

Central and Eastern United States rock sites show higher amplitude at high frequency than the CSDRS. Evaluations for high frequency exceedance at AP1000 plant rock sites have been performed as described in Appendix 3I. It is the conclusion of these evaluations that AP1000 plant systems, structures, and components are qualified for the high frequency seismic response based on the CSDRS with the exception of potential high frequency sensitive components (APP-GW-GLN-144, Reference 5). Specific models of components are not identified as part of the AP1000 certified design and are evaluated for high frequency sensitivity as part of the equipment qualification. Appendix 3I provides the criteria for addressing potential high frequency sensitive components for plant locations where there is CSDRS exceedance in the high frequency region.

3.10.1 Seismic and Dynamic Qualification Criteria

3.10.1.1 Qualification Standards

The methods of meeting the general requirements for the seismic and dynamic qualification of seismic Category I mechanical and electrical equipment and instrumentation as described by General Design Criteria (GDC) 1, 2, 4, 14, 23, and 30 are described in Section 3.1. The general methods of implementing the requirements of Appendix B to 10CFR50 are described in Chapter 17.

The Nuclear Regulatory Commission (NRC) recommendations concerning the methods employed for seismic qualification of mechanical and electrical equipment are contained in Regulatory Guide 1.100, which endorses IEEE 344-1987 (Reference 1).

[*AP1000 meets IEEE 344-1987, as modified by Regulatory Guide 1.100, by either type testing or analysis or by an appropriate combination of these methods*]* employing the methodology described in Appendix 3D.

The guidance provided in the ASME Code, Section III, is followed in the design of seismic Category I mechanical equipment to achieve the structural integrity of pressure boundary components. In addition, the AP1000 implements an operability program for active valves following Regulatory Guide 1.148, as addressed in subsection 1.9.1 and in Section 3.9.

3.10.1.2 Performance Requirements for Seismic Qualification

An equipment qualification data package (EQDP) is developed for the instrumentation and electrical equipment classified as seismic Category I. Table 3.11-1 of Section 3.11 identifies the seismic Category I electrical equipment and instrumentation supplied for the AP1000. Each equipment qualification data package contains a section entitled "Performance Requirements." This section establishes the safety-related functional requirements of the equipment to be demonstrated during and after a seismic event. The required response spectra employed by the AP1000 for generic seismic qualification are also identified in the section.

For active seismic Category I mechanical components, the performance requirements are defined in the appropriate design and equipment specifications. Requirements for active valves are discussed in subsection 3.10.2.2. The equipment qualification data packages are referenced in

*NRC Staff approval is required prior to implementing a change in this material; see DCD Introduction Section 3.5.

3.10.4 Documentation

The results of tests and analyses verifying that the criteria established in subsection 3.10.1 are satisfied, employing the qualification methods described in subsections 3.10.2 and 3.10.3, are included in the individual equipment qualification data packages and test reports. The upkeep of the equipment qualification file is maintained during the equipment selection and procurement phase is discussed in subsection 3.11.5.

Seismic qualification of equipment is documented in equipment qualification data packages, test reports, analysis reports, and calculation notes. Appendix 3D provides guidance in this area.

3.10.5 Standard Review Plan Evaluation

A summary describing the Standard Review Plan differences in regard to seismic and dynamic qualification of mechanical and electrical equipment is provided subsection 1.9.2.

3.10.6 Combined License Information Item on Experienced-Based Qualification

The Combined License information requested in this subsection has been totally addressed in APP-GW-GLN-006 (Reference 3) and APP-GW-GLR-031(Reference 4). No additional work is required by the Combined License applicant to address the Combined License information requested in this subsection.

The following words represent the original Combined License Information item commitment, which has been addressed as discussed above:

> *[The Combined License applicant will address, as part of the Combined License application, identification of the equipment qualified based on experience and include details of the methodology and the corresponding experience data. The corresponding experience data for each piece of equipment will be included in the equipment qualification file.]**

3.10.7 References

1. IEEE 344-1987, "Recommended Practices for Seismic Qualification of Class 1E Equipment for Nuclear Power Generating Stations."

2. IEEE 382-1996, "IEEE Standard for Qualification of Actuators for Power-Operated Valve Assemblies with Safety-Related Functions for Nuclear Power Plants."

3. APP-GW-GLN-006, "Methodology for Qualifying AP1000 Safety Related Electrical and Mechanical Equipment," Westinghouse Electric Company LLC.

4. APP-GW-GLR-031, "Seismic Qualification Using Test Experience-Based Method for AP1000 Safety Related Equipment," Westinghouse Electric Company LLC.

NRC 191

5. APP-GW-GLN-144, "AP1000 Design Control Document High Frequency Seismic Tier 1 Changes," Westinghouse Electric Company LLC.

*NRC Staff approval is required prior to implementing a change in this material; see DCD Introduction Section 3.5.

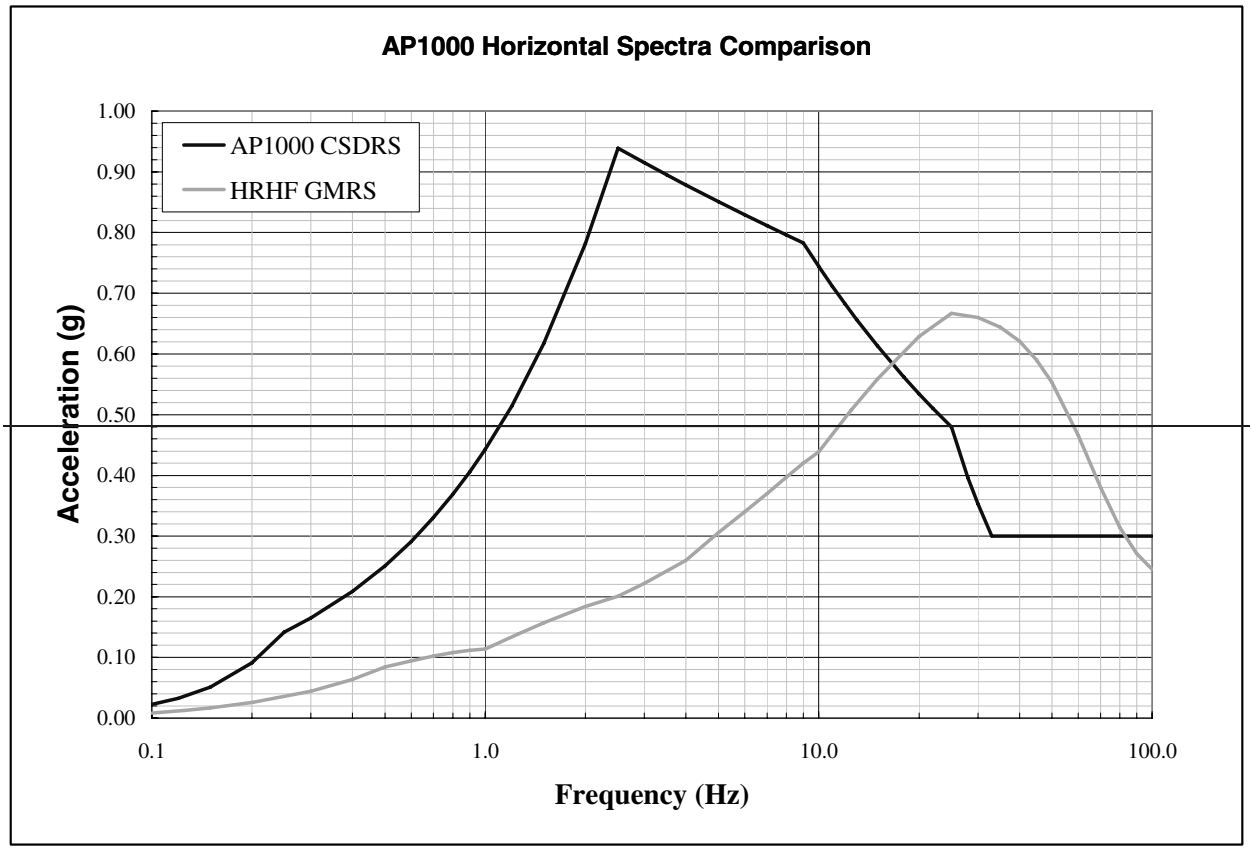
AP1000 Horizontal Spectra Comparison
AP1000 CSDRS
HRHF GMRS
Acceleration (g)
1.00
0.90
0.80
0.70
0.60
0.50
0.40
0.30
0.20
0.10
0.00
0.1
1.0
10.0
100.0
Frequency (Hz)

NRC 191

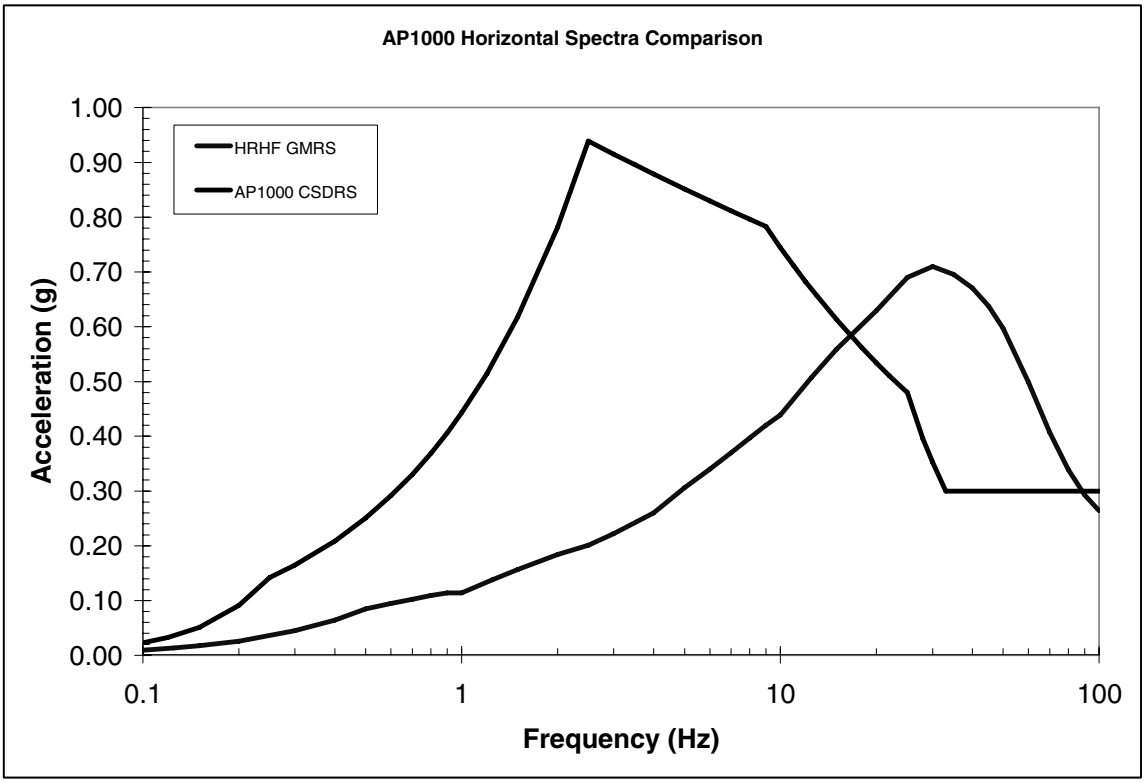

Figure 3I.1-1

Comparison of Horizontal AP1000 CSDRS and HRHF GMRS

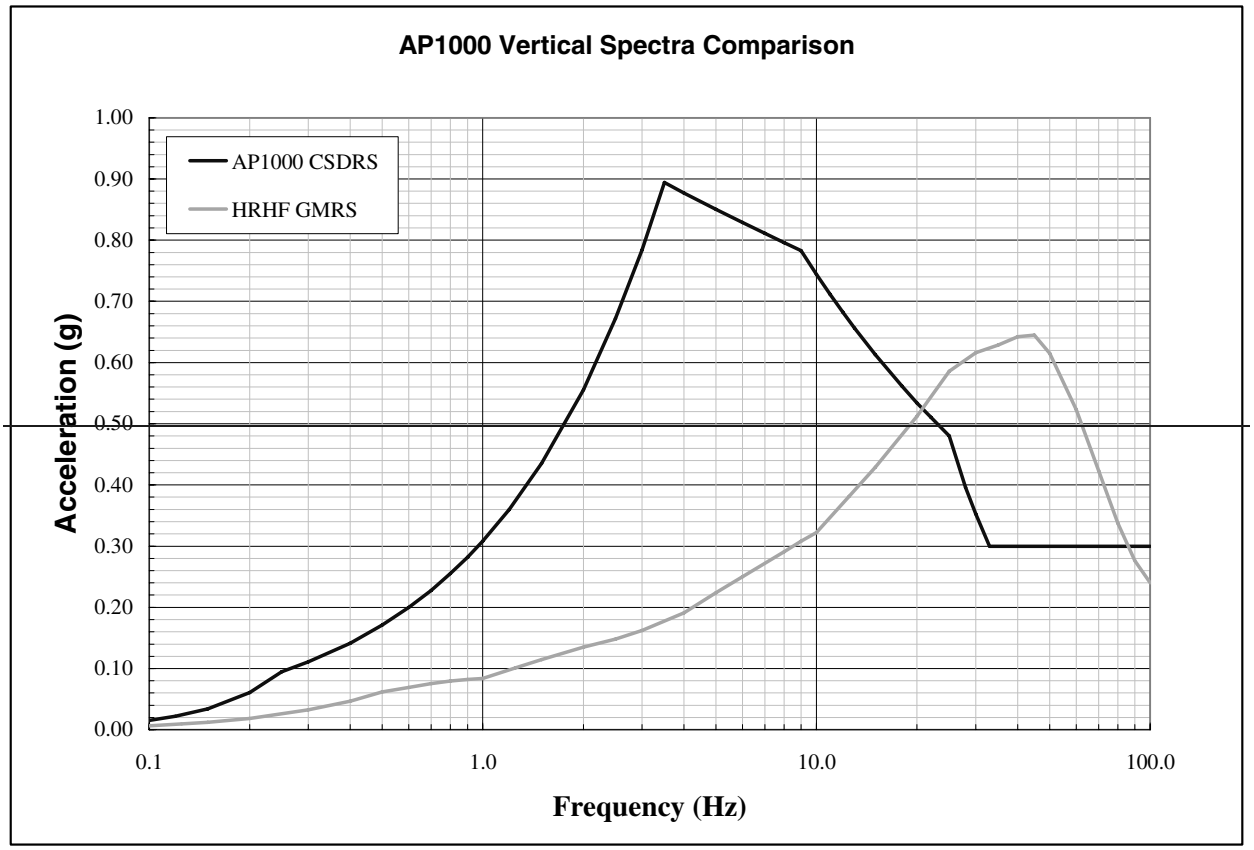
AP1000 Vertical Spectra Comparison
AP1000 CSDRS
HRHF GMRS
Acceleration (g)
1.00
0.90
0.80
0.70
0.60
0.50
0.40
0.30
0.20
0.10
0.00
0.1
1.0
10.0
100.0
Frequency (Hz)

NRC 191

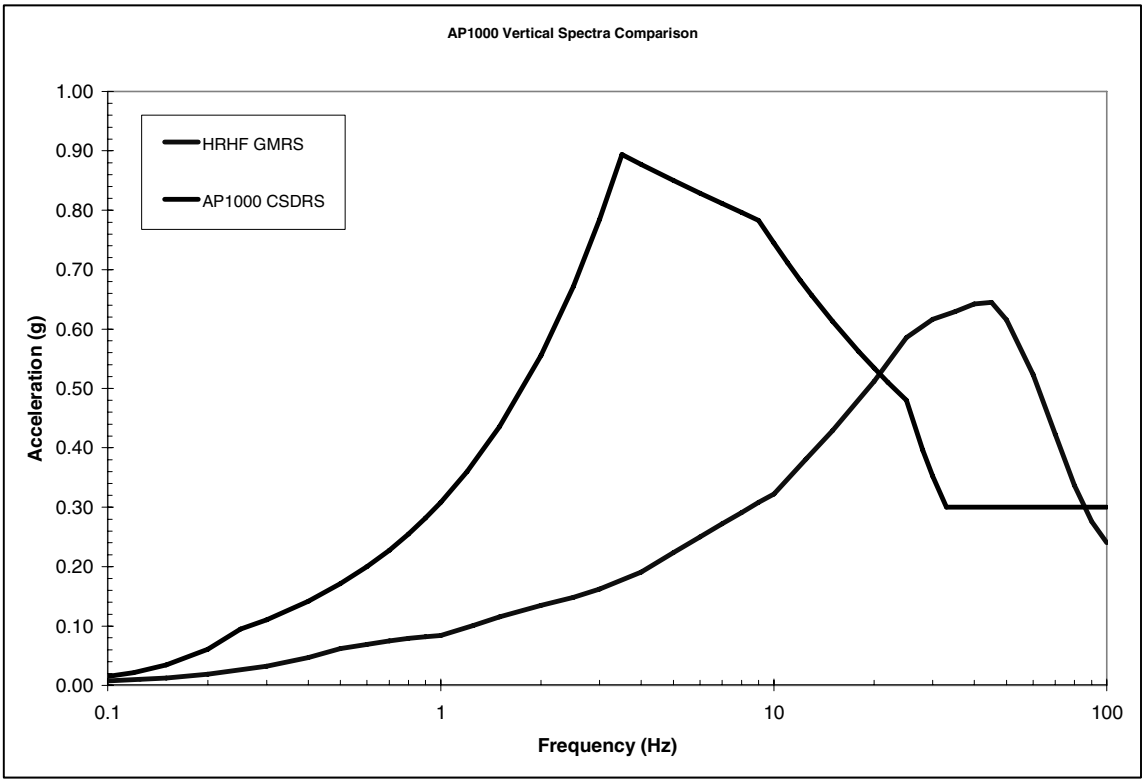

Figure 3I.1-2

Comparison of Vertical AP1000 CSDRS and HRHF GMRS

APP-GW-GLR-134

Revision 2

Attachment A

DCD Introduction and Tier 2

APP-GW-GLR-134
Revision 2

Attachment A

AP1000 DCD Impact Report

APP-GW-GL-700, Revision 16, "AP1000 Design Control Document"

DCD Section	*Westinghouse Status*	*Tracking Number*	*DCD Category*	*Change Criteria*
Section 1, Table 1-1, 1-2	**Accepted for Revision 17 of the DCD and Revision 2 of TR 134**	**NRC193**	**DCD Introduction**	**NRC Prior Approval Not Required**

Description:

NRC193 contains corrections to Section 1, Table 1-1 and Table 1-2 of DCD Revision 16 to reinstate the piping DAC to address NRC acceptance issues.

Reference Information:

Attachment A

AP1000 DCD Impact Report

APP-GW-GL-700, Revision 16, "AP1000 Design Control Document"

DCD Section	Westinghouse Status	Tracking Number	DCD Category	Change Criteria
3.6.4.1	**Accepted for Revision 17 of the DCD and Revision 2 of TR 134**	**NRC198**	**Tier 2**	**NRC Prior Approval Not Required**

Description:

NRC198 contains COL holder information items to address NRC acceptance issues.

Reference Information:

DCD Section	Westinghouse Status	Tracking Number	DCD Category	Change Criteria
3.9.8.2	**Accepted for Revision 17 of the DCD and Revision 2 of TR 134**	**NRC196**	**Tier 2**	**NRC Prior Approval Not Required**

Description:

NRC196 contains COL holder information items that have been changed to address ASME code section III, design specifications and design reports.

Reference Information:

AP1000 DCD Impact Report

APP-GW-GL-700, Revision 16, "AP1000 Design Control Document"

DCD Section	Westinghouse Status	Tracking Number	DCD Category	Change Criteria
6.3.2.2.7.2, 6.3.2.2.7.3, 6.3.9	**Accepted for Revision 17 of the DCD and Revision 2 of TR 134**	**NRC194**	**Tier 2**	**NRC Prior Approval Not Required**

Description:

NRC194 contains additional design information about containment re-circulation and IWRST screens to be consistent with APP-GW-GLN-147, Rev A.

Reference Information:

APP-GW-GLN-147 RA

DCD Section	Westinghouse Status	Tracking Number	DCD Category	Change Criteria
6.3.8.2, Table 1.8-2	**Accepted for Revision 17 of the DCD and Revision 2 of TR 134**	**NRC197**	**Tier 2**	**NRC Prior Approval Not Required**

Description:

NRC197 contains COL holder information items to address NRC acceptance issues.

Reference Information:

Attachment A

AP1000 DCD Impact Report

APP-GW-GL-700, Revision 16, "AP1000 Design Control Document"

DCD Section	*Westinghouse Status*	*Tracking Number*	*DCD Category*	*Change Criteria*
16: TS 3.3.1, 3.3.2	**Accepted for Revision 17 of the DCD and Revision 2 of TR 134**	**NRC195**	**Tier 2**	**NRC Prior Approval Not Required**

Description:

The generic AP1000 Technical Specifications include a total of six (6) bracketed information time values that required justification for use in the digital instrumentation and control (I&C) design. APP-GW-GLR-064, Revision 1, was submitted in April 2007 reflecting removal of the brackets and a relaxation of the one surveillance frequency time value.

A project decision was made to withdraw the extended surveillance value for this item to facilitate the current design certification effort. This change requires a revision of the justification reference document that addresses all six time values. Therefore, the brackets are being restored for all six of these time values and will remain as bracketed time values until the reference document referenced in Technical Specifications 3.3.1 and 3.3.2 can be completed.

These six bracketed time values in the generic AP1000 Technical Specifications 3.3.1 and 3.3.2 require justification for use in the digital instrumentation and control (I&C) design. These AP1000 time values are based on the time values provided in the NUREG-1431, Revision 2 that reference WCAP-10271. As discussed in DCD 16.1.1, NUREG-1431, Rev. 2 is the basis for development of the generic AP1000 Technical Specifications.

Reference Information:

Attachment B

DCD Markup Pages

APP-GW-GLR-134
Revision 2

Table 1-1 (Cont.)
Index of AP1000 Tier 2 Information Requiring NRC Approval for Change

Item	Expiration at First Full Power	Tier 2 Reference
WCAP-14651, "Integration of Human Reliability Analysis with Human Factors Engineering Design Implementation Plan," Rev 2	No	18.12.5
NRC 193 Piping Design Analysis Criteria (DAC)	Yes~~Resolved~~	See DCD Intro, Table 1-2

Table 1-2
Piping Design Acceptance Criteria

~~The piping design acceptance criteria is resolved as summarized in APP-GW-GLR-013 (Reference 1). Table 1-2 not used.~~

Commitment	Tier 2 Reference
ASME Code and Code Cases for AP1000 piping and pipe support design	Table 3.9-9, Table 3.9-10, 5.2.1.1, 5.2.1.2, Table 5.2-3
Analysis Methods; experimental stress analysis, independent support motion, inelastic analysis, non-seismic/seismic interaction, buried piping	3.7.3.9, 3.7.3.12, 3.7.3.13, 3.9.1.3, 3.9.3.1.5
Piping Modeling; piping benchmark program, decoupling criteria	3.6.2.1.1.1, 3.6.2.1.1.2, 3.6.2.1.1.3, 3.7.3.8.2.1, 3.9.1.2
Pipe stress analysis criteria; loading and load combinations, damping values, combination of modal responses, high frequency modes, thermal oscillations in piping connected to the reactor coolant system, thermal stratification, safety-related valve design, installation and testing, functional capability, combination of inertial and seismic motion effects, welded attachments, modal damping for composite structures, minimum temperature for thermal analysis	3.6.2.2, 3.6.3.3, 3.7.2.14, 3.7.3.2, 3.7.3.7, 3.7.3.8.2.1, 3.7.3.9, Table 3.7.1-1, 3.9.3.1.2, 3.9.3.1.5, 3.9.3.3, Table 3.9-5, Table 3.9-6, Table 3.9-7, Table 3.9-8, Table 3.9-9, Table 3.9-10, Table 3.9-11
NRC 193 Pipe support criteria; applicable codes, jurisdictional boundaries, pipe support baseplate and anchor bolt design, use of energy absorbers and limit stops, pipe support stiffnesses, seismic self-weight excitation, design of supplementary steel, considerations of friction forces, pipe support gaps and clearances, instrument line support criteria	3.9.1.2, 3.9.3.4, 3.9.3.5
Equivalent Static Load Method of Analysis	3.7.3.5, 3.7.3.5.1, 3.7.3.5.2
Three Components of Earthquake Motion	3.7.3.6
Left-Out-Force Method Used in PIPESTRESS Program	3.7.3.7.1.1
SRP 3.7.2 Method for High-Frequency Modes	3.7.3.7.1.2
Combination of Low-Frequency Modes	3.7.3.7.2
Modeling Methods and Analytical Procedures for Piping Systems	3.7.3.8, 3.7.3.8.1, 3.7.3.8.2.2, 3.7.3.8.3, 3.7.3.8.4
Seismic Anchor Motions	3.7.3.9
Methods Used to Account for Torsional Effects of Eccentric Masses	3.7.3.11
Design Methods of Piping to Prevent Adverse Spatial Interactions	3.7.3.13.4, 3.7.3.13.4.1, 3.7.3.13.4.2, 3.7.3.13.4.3
Analysis Procedure for Damping	3.7.3.15
Time History Analysis of Piping Systems	3.7.3.17

Design Transients Use of NRC Bulletins 88-08 and 88-11	3.9.1.1

Table 1-2 (Cont.)
Piping Design Acceptance Criteria

Commitment	Tier 2 Reference
Loads for Class 1 Components and Core/Component Supports	3.9.3.1.2
Use of Square-Root-Sum-of-the-Squares Method for SSE plus Pipe Rupture	3.9.3.1.3
Analysis of Reactor Coolant Loop Piping	3.9.3.1.4
ASME Classes 1, 2, and 3 Piping Use of ASME Code, Section III	3.9.3.1.5
Design of Spring-Loaded Safety Valves	3.9.3.3.1
Design and Analysis Requirement for Open and Closed Discharge Systems	3.9.3.3.3
Component and Piping Supports for Dynamic Loading	3.9.3.4
Class 2 and 3 Component Supports Use of ASME Section III	3.9.3.4.2
Piping System Seismic Stress Analysis	3.9.3.4.3
Design Report for ASME Class 1, 2, and 3 Piping	3.9.8.2
Integrity of Nonsafety-Related CVS Piping Inside Containment Compliance with 10 CFR 50.55a and ASME B31.1 Code	5.2.1.1

NRC 193

Table 1.8-2 (Sheet 6 of 13)

SUMMARY OF AP1000 STANDARD PLANT COMBINED LICENSE INFORMATION ITEMS

NRC 197

Item No.	Subject	Subsection	Addressed by Westinghouse Document	Action Required by COL Applicant	Action Required by COL Holder
6.3-2	Verification of Containment Resident Particulate Debris Characteristics	6.3.8.2	APP-GW-GLR-079	No	Yes~~No~~
6.4-1	Local Hazardous Gas Services and Monitoring	6.4.7	N/A	Yes	–
6.4-2	Procedures for Training for Control Room Habitability	6.4.7	N/A	Yes	–
6.4-3	Main Control Room Inleakage Test Frequency	6.4.7	APP-GW-GLR-007	No	No
6.6-1	Inspection Programs	6.6.9.1	N/A	Yes	–
6.6-2	Construction Activities	6.6.9.2	N/A	Yes	–
7.1-1	Setpoint Calculations for Protective Functions	7.1.6.1	WCAP-16361-P	No	No
7.1-2	Resolution of Generic Open Items and Plant-Specific Action Items	7.1.6.2	APP-GW-GLR-017	No	No
7.2-1	FMEA for Protection System	7.2.3	WCAP-16438-P WCAP-16592-P	No	No
8.2-1	Offsite Electrical Power	8.2.5	N/A	Yes	–
8.2-2	Technical Interfaces	8.2.5	N/A	Yes	–
8.3-1	Grounding and Lightning Protection	8.3.3	N/A	Yes	–
8.3-2	Onsite Electrical Power Plant Procedures	8.3.3	N/A	Yes	–
9.1-1	New Fuel Rack	9.1.6.1	APP-GW-GLR-026	No	No

The work performed to support the issuance of APP-GW-GLR-074 (Reference 16) is deemed adequate to establish the licensing basis in the area of pipe break hazard analysis. As explained in APP-GW-GLR-021, which discusses AP1000 As-Built COL Information Items, the timing of the reconciliation of the pipe break hazard analysis is such that the reconciliation cannot be provided by an applicant for a COL. This reconciliation will be done prior to operation of the plant.

The following words represent the original Combined License Information item commitment, which has been addressed as discussed above:

Combined License applicants referencing the AP1000 certified design will complete the final pipe whip restraint design and address as-built reconciliation of the pipe break hazards analysis in accordance with the criteria outlined in subsections 3.6.1.3.2 and 3.6.2.5. The as-built pipe rupture hazard analysis will be documented in an as-built Pipe Rupture Hazards Analysis Report.

NRC 198 After a Combined License is issued, the following activities~~y~~ will be completed by the COL holder:

NRC 198 Combined License holders referencing the AP1000 certified design will complete the pipe whip restraint design and complete an as-designed pipe break hazards analysis in accordance with the criteria outlined in subsections 3.6.1.3.2 and 3.6.2.5. The as-designed pipe rupture hazard analysis including break locations based on as-designed pipe analysis will be documented in an as-built Pipe Rupture Hazards Analysis Report.

A pipe rupture hazard analysis is part of the piping design. It is used to identify postulated break locations and layout changes, support design, whip restraint design, and jet shield design. The final design for these activities will be completed prior to fabrication and installation of the piping and connected components. The as-built reconciliation of the pipe break hazards analysis in accordance with the criteria outlined in subsections 3.6.1.3.2 and 3.6.2.5 will be completed prior to fuel load.

3.6.4.2 Leak-before-Break Evaluation of as-Designed Piping

The Combined License information requested in this subsection has been completely addressed in APP-GW-GLR-022 (Reference 15), and the applicable changes are incorporated into the DCD. No additional work is required by the Combined License applicant.

The following words represent the original Combined License Information item commitment, which has been addressed as discussed above:

Combined License applicants referencing the AP1000 certified design will complete the leak-before-break evaluation by comparing the results of the as-designed piping stress analysis with the bounding analysis curves documented in Appendix 3B. The Combined License applicant may perform leak-before-break evaluation for a specific location and loading for cases not covered by the bounding analysis curves. Successfully satisfying the bounding analysis curve limits in Appendix 3B may necessitate lowering the detection limit for unidentified leakage in containment from 0.5 gpm to 0.25 gpm. If so, the Combined

COL Holder Activities

After a Combined License is issued, the following activities are completed by the COL holder:

NRC 196

A Combined License holder referencing the AP1000 design will have available for NRC audit the design specifications and as-designed design reports prepared for major ASME Section III components.

A Combined License holder referencing the AP1000 design will have available for NRC audit the design specifications prepared for ASME Section III auxiliary components and valves.

Reconciliation of the as-built piping (verification of the thermal cycling and stratification loadings considered in the stress analysis discussed in subsection 3.9.3.1.2) is completed by the COL holder after the construction of the piping systems and prior to fuel load (Reference 33).

The following words represent the original Combined License Information item commitment, which has been addressed as discussed above:

Combined License applicants referencing the AP1000 design will have available for NRC audit the design specifications and design reports prepared for ASME Section III components. Combined License applicants will address consistency of the reactor vessel core support materials relative to known issues of irradiation-assisted stress corrosion cracking or void swelling (see subsection 4.5.2.1). [*The design report for the ASME Class 1, 2, and 3 piping will include the reconciliation of the as-built piping as outlined in subsection 3.9.3. This reconciliation includes verification of the thermal cycling and stratification loadings considered in the stress analysis discussed in subsection 3.9.3.1.2.*]*

3.9.8.3 Snubber Operability Testing

Combined License applicants referencing the AP1000 design will develop a program to verify operability of essential snubbers as outlined in subsection 3.9.3.4.3.

3.9.8.4 Valve Inservice Testing

Combined License applicants referencing the AP1000 design will develop an inservice test program in conformance with the valve inservice test requirements outlined in subsection 3.9.6 and Table 3.9-16. For power-actuated valves, the requirements for operability testing shall be based on subsection 3.9.6.2.2. This program will include provisions for nonintrusive check valve testing methods and the program for valve disassembly and inspection outlined in subsection 3.9.6.2.3. The Combined License applicant will complete an evaluation as identified in subsection 3.9.6.2.2 to determine the frequency of power-operated valve operability testing.

*NRC Staff approval is required prior to implementing a change in this information; see DCD Introduction Section 3.5.

IRWST. As described in subsection 6.1.2.1.5, failure of this coating produces a heavy powder which if it enters the IRWST through the gutter will settle out on the bottom of the IRWST because of its high specific gravity. Settling is enhanced in the IRWST by low velocities in the tank and long tank drain down times.

The design of the IRWST screens reduces the chance of debris reaching the screens. The screens are oriented vertically such that debris that settles out of the water does not fall on the screens. The screen design provides a debris curb function at the base of the IRWST screens to prevent high density debris from being swept along the floor by water flow to the IRWST screens. The screen design provides the trash rack function. This is accomplished by the screens having a large surface area to prevent a single object from blocking a large portion of the screen and by the screens having a robust design to preclude an object from damaging the screen and causing by-pass. The screen prevents debris larger than 0.125" from being injected into the reactor coolant system and blocking fuel cooling passages. The screen is a type ~~(folded, pockets, etc.)~~ that has sufficient surface area to accommodate debris that could be trapped on the screen. The design of the IRWST screens is described in APP-GW-GLN-147 (Reference 4).

NRC 194

The screen flow area is conservatively designed considering the operation of the nonsafety-related normal residual heat removal system pumps which produce a higher flow than the safety-related gravity driven IRWST injection/recirculation flows. As a result, when the normal residual heat removal system pumps are not operating there is a large margin to screen clogging.

6.3.2.2.7.3 Containment Recirculation Screens

The containment recirculation screens are oriented vertically along walls above the loop compartment floor (elevation 83 feet). Figure 6.3-8 shows a plan view and Figure 6.3-9 shows a section view of these screens. Two separate screens are provided as shown in Figure 6.3-3. The loop compartment floor elevation is significantly above (11.5 feet) the lowest level in the containment, the reactor vessel cavity. The bottom of the recirculation screen is two feet above the floor, providing a curb function.

During a LOCA, the reactor coolant system blowdown will tend to carry debris created by the accident (pipe whip/jets) into the cavity under the reactor vessel which is located away from and below the containment recirculation screens. As the accumulators, core makeup tanks and IRWST inject, the containment water level will slowly rise above the 108 foot elevation. The containment recirculation line opens when the water level in the IRWST drops to a low level setpoint a few feet above the final containment floodup level. When the recirculation lines initially open, the water level in the IRWST is higher than the containment water level and water flows from the IRWST backwards through the containment recirculation screen. This back flow tends to flush debris located close to the recirculation screens away from the screens. A cross connect pipe line interconnects the two PXS subsystems so that both recirculation screens will operate, even in the case of a LOCA of a DVI line in a PXS valve room. Such a LOCA can flood the recirculation valves located in one of the PXS rooms before they are actuated, and the failure of these valves is assumed since they are not qualified to operate in such conditions. The recirculation valves in the other PXS valve room are unaffected.

The water level in the containment when recirculation begins is well above (~ 10 feet) the top of the recirculation screens. During the long containment floodup time, floating debris does not move toward the screens and heavy materials settle to the floors of the loop compartments or the reactor vessel cavity. During recirculation operation the containment water level will not change significantly nor will it drop below the top of the screens.

The amount of debris that may exist following an accident is limited. Reflective insulation is used to preclude fibrous debris that can be generated by a loss of coolant accident and be postulated to reach the screens during recirculation. The nonsafety-related coatings used in the containment are designed to withstand the post accident environment. The containment recirculation screens are protected by plates located above them. These plates prevent debris from the failure of nonsafety-related coatings from getting into the water close to the screens such that the recirculation flow can cause the debris to be swept to the screens before it settles to the floor. Stainless steel is used on the underside of these plates and on surfaces located below the plates, above the bottom of the screens, 10 feet in front and 7 feet to the side of the screens to prevent coating debris from reaching the screens.

A cleanliness program (refer to subsection 6.3.8.1) controls foreign debris introduced into the containment during maintenance and inspection operations. The Technical Specifications require visual inspections of the screens during every refueling outage.

The design of the containment recirculation screens reduces the chance of debris reaching the screens. The screens are orientated vertically such that debris settling out of the water will not fall on the screens. The protective plates described above provide additional protection to the screens from debris. The bottom of the screens are located 2 feet above the floor, instead of using a debris curb, to prevent high density debris from being swept along the floor by water flow to the containment recirculation screens. The screen design provides the trash rack function. This is accomplished by the screens having a large surface area to prevent a single object from blocking a large portion of the screen and by the screens having a robust design to preclude an object from damaging the screen and causing by-pass. The screen prevents debris larger than 0.125" from being injected into the reactor coolant system and blocking fuel cooling passages. The screen is a type ~~(folded, pocket, etc.)~~ that has more surface area to accommodate debris that could be trapped on the fine screen. The design of the containment recirculation screens is further described in APP-GW-GLN-147 (Reference 4).

NRC 194

The screen flow area is conservatively designed, considering the operation of the normal residual heat removal system pumps, which produce a higher flow than the gravity driven IRWST injection/recirculation flows. As a result, when the normal residual heat removal system pumps are not operating there is even more margin in screen clogging.

6.3.2.2.8 Valves

Design features used to minimize leakage for valves in the passive core cooling system include:

- Packless valves are used for manual isolation valves that are 2 inches or smaller.

6.3.8.2 Verification of Water Sources for Long-Term Recirculation Cooling Following a LOCA

The Combined License information requested in this subsection has been ~~fully~~ addressed in APP-GW-GLR-079 (Reference 3), and the applicable changes are incorporated into the DCD. ~~No additional work is required by the Combined License applicant to address the aspects of the Combined License information requested in this subsection.~~

NRC 197

The combined license holder referencing the AP1000 design will provide an assessment of the acceptability of the screen performance by performing testing and analysis of the screens. Downstream effects will be assessed to confirm the coolability of the core.

The completed evaluation documented in APP-GW-GLR-079 (Reference 3) is consistent with Regulatory Guide 1.82 Revision 3 and demonstrates that adequate long-term core cooling is available considering debris resulting from a LOCA and debris that might exist in containment prior to a LOCA.

The following words represent the original Combined License Information Item commitment, which has been addressed as discussed above:

> The Combined License applicants referencing the AP1000 will perform an evaluation consistent with Regulatory Guide 1.82, revision 3, and subsequently approved NRC guidance, to demonstrate that adequate long-term core cooling is available considering debris resulting from a LOCA together with debris that exists before a LOCA. As discussed in DCD subsection 6.3.2.2.7.1, a LOCA in the AP1000 does not generate fibrous debris due to damage to insulation or other materials included in the AP1000 design. The evaluation will consider resident fibers and particles that could be present considering the plant design, location, and containment cleanliness program. The determination of the characteristics of such resident debris will be based on sample measurements from operating plants. The evaluation will also consider the potential for the generation of chemical debris (precipitants). The potential to generate such debris will be determined considering the materials used inside the AP1000 containment, the post-accident water chemistry of the AP1000, and the applicable research/testing.

6.3.9 References

1. WCAP-8966, “Evaluation of Mispositioned ECCS Valves,” September 1977.

2. WCAP-13594 (P), WCAP-13662 (NP), “FMEA of Advanced Passive Plant Protection System,” Revision 1, June 1998.

3. APP-GW-GLR-079, “AP1000 Verification of Water Sources for Long-Term Recirculation Cooling Following a LOCA,” Westinghouse Electric Company LLC.

NRC 194

4. APP-GW-GLN-147, “AP1000 Containment Recirculation and IRWST Screen Design,” Westinghouse Electric Company LLC.

ACTIONS (continued)

CONDITION	REQUIRED ACTION	COMPLETION TIME
D. One or two Power Range Neutron Flux – High channels inoperable.	D.1.1 Reduce THERMAL POWER to ≤ 75% RTP. AND	12 hours
NRC 195	D.1.2 Place one inoperable channel in bypass or trip. AND	[6] hours
NRC 195	D.1.3 With two inoperable channels, place one channel in bypass and one channel in trip. OR	[6] hours
NRC 195	D.2.1 Place inoperable channel(s) in bypass. AND ---------- **- NOTE -** Only required to be performed when OPDMS is inoperable and the Power Range Neutron Flux input to QPTR is inoperable. ---------- D.2.2 Perform SR 3.2.4.2 (QPTR verification). OR D.3 Be in MODE 3.	[6] hours Once per 12 hours 12 hours
NRC 195 E. One or two channels inoperable.	E.1.1 Place one inoperable channel in bypass or trip. AND	[6] hours

ACTIONS (continued)

CONDITION	REQUIRED ACTION	COMPLETION TIME
NRC 195	E.1.2 With two channels inoperable, place one channel in bypass and one channel in trip. OR E.2 Be in MODE 3.	[6] hours 12 hours
NRC 195 NRC 195	F. THERMAL POWER between P-6 and P-10, one or two Intermediate Range Neutron Flux channels inoperable.	F.1.1 Place one inoperable channel in bypass or trip. AND F.1.2 With two channels inoperable, place one channel in bypass and one channel in trip. OR F.2 Reduce THERMAL POWER to < P-6. OR F.3 Increase THERMAL POWER to > P-10.	[2] hours [2] hours 2 hours 2 hours
	G. THERMAL POWER between P-6 and P-10, three Intermediate Range Neutron Flux channels inoperable.	G.1 Suspend operations involving positive reactivity additions. AND G.2 Reduce THERMAL POWER to < P-6.	Immediately 2 hours
	H. THERMAL POWER < P-6, one or two Intermediate Range Neutron Flux channels inoperable.	H.1 Restore three of four channels to OPERABLE status.	Prior to increasing THERMAL POWER to > P-6

ACTIONS (continued)

CONDITION	REQUIRED ACTION	COMPLETION TIME
I. One or two Source Range Neutron Flux channels inoperable.	I.1 Suspend operations involving positive reactivity additions.	Immediately
J. Three Source Range Neutron Flux channels inoperable.	J.1 Open RTBs.	Immediately
NRC 195 K. One or two channels inoperable.	K.1.1 Place one inoperable channel in bypass or trip.	[6] hours
	AND	
NRC 195	K.1.2 With two channels inoperable, place one channel in bypass and one channel in trip.	[6] hours
	OR	
	K.2 Reduce THERMAL POWER to < P-10.	12 hours
NRC 195 L. One or two channels inoperable.	L.1.1 Place one inoperable channel in bypass or trip.	[6] hours
	AND	
NRC 195	L.1.2 With two channels inoperable, place one channel in bypass and one channel in trip.	[6] hours
	OR	
	L.2 Reduce THERMAL POWER to < P-10.	10 hours
M. One or two channels/ divisions inoperable.	M.1 Restore three of four channels/divisions to OPERABLE status.	6 hours
	OR	
	M.2 Be in MODE 3.	12 hours

ACTIONS (continued)

CONDITION	REQUIRED ACTION	COMPLETION TIME
N. One or two interlock channels inoperable.	N.1 Verify the interlocks are in required state for existing plant conditions.	1 hour
	OR	
NRC 195	N.2.1 Place the Functions associated with one inoperable interlock channel in bypass or trip.	[7] hours
	AND	
NRC 195	N.2.2 With two interlock channels inoperable, place the Functions associated with one inoperable interlock channel in bypass and with one inoperable interlock channel in trip.	[7] hours
	OR	
	N.3 Be in MODE 3.	13 hours
O. One division inoperable.	O.1 Open RTBs in inoperable division.	8 hours
	OR	
	O.2.1 Be in MODE 3, 4, or 5.	14 hours
	AND	
	O.2.2 Open RTBs.	14 hours

ACTIONS (continued)

CONDITION	REQUIRED ACTION	COMPLETION TIME
P. Two divisions inoperable.	P.1 Restore three of four divisions to OPERABLE status.	1 hour
	OR	
	P.2.1 Be in MODE 3, 4, or 5.	7 hours
	AND	
	P.2.2 Open RTBs.	7 hours
Q. One or two channels/ divisions inoperable.	Q.1 Restore three of four channels/divisions to OPERABLE status.	48 hours
	OR	
	Q.2 Open RTBs.	49 hours
NRC 195 R. One or two Source Range Neutron Flux channel inoperable.	R.1 Restore three of four channels to OPERABLE status.	[48] hours
	OR	
NRC 195	R.2 Open RTBs.	[49] hours
S. Required Source Range Neutron Flux channel inoperable.	S.1 Suspend operations involving positive reactivity additions.	Immediately
	AND	
	S.2 Close unborated water source isolation valves.	1 hour
	AND	
	S.3 Perform SR 3.1.1.1.	1 hour AND Once per 12 hours thereafter

SURVEILLANCE REQUIREMENTS (continued)

SURVEILLANCE		FREQUENCY
SR 3.3.1.3	---------- **- NOTES -** 1. Adjust nuclear instrument channel in PMS if absolute difference is ≥ 3% AFD. 2. Required to be met within 24 hours after reaching 20% RTP. ---------- Compare results of the incore detector measurements to nuclear instrument channel AXIAL FLUX DIFFERENCE.	31 effective full power days (EFPD)
SR 3.3.1.4	---------- **- NOTE -** Required to be met within 24 hours after reaching 50% RTP. ---------- Calibrate excore channels to agree with incore detector measurements.	92 EFPD
SR 3.3.1.5	---------- **- NOTE -** This Surveillance must be performed on both reactor trip breakers associated with a single division. ---------- Perform TADOT.	92 days on a STAGGERED TEST BASIS
SR 3.3.1.6	---------- **- NOTE -** Not required to be performed for source range instrumentation prior to entering MODE 3 from MODE 2 until 4 hours after entry into MODE 3. ---------- Perform RTCOT.	[92] days~~24 months~~

NRC 195

3.3 INSTRUMENTATION

3.3.2 Engineered Safety Feature Actuation System (ESFAS) Instrumentation

LCO 3.3.2 The ESFAS instrumentation for each function in Table 3.3.2-1 shall be OPERABLE.

APPLICABILITY: According to Table 3.3.2-1.

ACTIONS

- NOTES -

1. Separate condition entry is allowed for each Function.

2. The Conditions for each Function are given in Table 3.3.2-1. If the Required Actions and associated Completion Times of the first Condition are not met, refer to the second Condition.

CONDITION	REQUIRED ACTION	COMPLETION TIME
A. One or more Functions with one or more required channels or divisions inoperable.	A.1 Enter the Condition referenced in Table 3.3.2-1 for the channel(s) or division(s).	Immediately
NRC 195 B. One or two channels or divisions inoperable.	B.1 Place one inoperable channel or division in bypass or trip. AND	[6] hours
NRC 195	B.2 With two inoperable channels or divisions, place one inoperable channel or division in bypass and one inoperable channel or division in trip.	[6] hours
NRC 195 C. One channel inoperable.	C.1 Place inoperable channel in bypass.	[6] hours

ACTIONS (continued)

CONDITION	REQUIRED ACTION	COMPLETION TIME
D. One required division inoperable.	D.1 Restore required division to OPERABLE status.	6 hours
E. One switch or switch set inoperable.	E.1 Restore switch and switch set to OPERABLE status.	48 hours
F. One channel inoperable.	F.1 Restore channel to OPERABLE status. OR F.2.1 Verify alternate radiation monitors are OPERABLE. AND F.2.2 Verify control room isolation and air supply initiation manual controls are OPERABLE.	72 hours 72 hours 72 hours
G. One switch, switch set, channel, or division inoperable.	G.1 Restore switch, switch set, channel, and division to OPERABLE status.	72 hours
H. One channel inoperable.	H.1 Place channel in trip.	6 hours
NRC 195 I. One or two channels inoperable.	I.1 Place one inoperable channel in bypass or trip. AND NRC 195 I.2 With two inoperable channels, place one channel in bypass and one channel in trip.	[6] hours [6] hours
J. One or two interlock channels inoperable.	J.1 Verify the interlocks are in the required state for the existing plant conditions. OR	1 hour

ACTIONS (continued)

CONDITION	REQUIRED ACTION	COMPLETION TIME
NRC 195	J.2.1 Place the Functions associated with one inoperable interlock channel in bypass or trip.	[7] hours
	AND	
NRC 195	J.2.2 With two interlock channels inoperable, place the Functions associated with one inoperable interlock channel in bypass and with one inoperable interlock channel in trip.	[7] hours
K. Required Action and associated Completion Time not met.	K.1 ---------- **- NOTE -** LCO 3.0.8 is not applicable. ---------- Suspend movement of irradiated fuel assemblies.	Immediately
L. Required Action and associated Completion Time not met.	L.1 Be in MODE 3.	6 hours
M. Required Action and associated Completion Time not met.	M.1 Be in MODE 3.	6 hours
	AND	
	M.2 Be in MODE 4.	12 hours
N. Required Action and associated Completion Time not met.	N.1 Be in MODE 3.	6 hours
	AND	
	N.2 Be in MODE 4 with the RCS cooling provided by the RNS.	24 hours

SURVEILLANCE REQUIREMENTS

- NOTE -

Refer to Table 3.3.2-1 to determine which SRs apply for each Engineered Safety Features (ESF) Function.

SURVEILLANCE		FREQUENCY
SR 3.3.2.1	Perform CHANNEL CHECK.	12 hours
SR 3.3.2.2	Perform ACTUATION LOGIC TEST.	92 days on a STAGGERED TEST BASIS
SR 3.3.2.3	--- **- NOTE -** Verification of setpoint not required for manual initiation functions. --- Perform TRIP ACTUATING DEVICE OPERATIONAL TEST (TADOT).	24 months
SR 3.3.2.4	--- **- NOTE -** This surveillance shall include verification that the time constants are adjusted to the prescribed values. --- Perform CHANNEL CALIBRATION.	24 months
NRC 195 SR 3.3.2.5	Perform CHANNEL OPERATIONAL TEST (COT).	[92] days~~24 months~~
SR 3.3.2.6	Verify ESFAS RESPONSE TIMES are within limit.	24 months on a STAGGERED TEST BASIS
SR 3.3.2.7	--- **- NOTE -** This Surveillance is not required to be performed for actuated equipment which is included in the Inservice Test (IST) Program. --- Perform ACTUATION DEVICE TEST.	24 months
SR 3.3.2.8	Perform ACTUATION DEVICE TEST for squib valves.	24 months

BASES

ACTIONS (continued)

total time) followed by opening the RTBs within 1 additional hour (55 hours total time). The 6 additional hours to reach MODE 3 and the 1 hour to open the RTBs are reasonable, based on operating experience, to reach MODE 3 and open the RTBs from full power operation in an orderly manner and without challenging unit systems. With the RTBs open and the unit in MODE 3, this trip Function is no longer required to be OPERABLE.

C.1 and C.2

Condition C applies to the Manual Reactor Trip in MODES 3, 4, and 5 with the RTBs closed and the PLS capable of rod withdrawal. These Required Actions address inoperability of one manual initiation device of the Manual Reactor Trip Function. One device consists of an actuation switch and the associated hardware (such as contacts and wiring) up to but not including the eight Reactor Trip Breakers. With one device inoperable, the inoperable device must be restored to OPERABLE status within 48 hours. In this Condition, the remaining OPERABLE device is adequate to perform the safety function.

If the Manual Reactor Trip Function cannot be restored to OPERABLE status in the allowed 48 hour Completion Time, the unit must be placed in a MODE in which the requirement does not apply. To achieve this status, the RTBs must be opened within the next 1 hour. With the RTBs open, this Function is no longer required.

D.1.1, D.1.2, D.1.3, D.2.1, D.2.2, and D.3

Condition D applies to the Power Range Neutron Flux – High Function in MODES 1 and 2.

NRC 195

With one or two channels inoperable, one affected channel must be placed in a bypass or trip condition within [6] hours. If one channel is bypassed, the logic becomes two-out-of-three, while still meeting the single failure criterion. (A failure in one of the three remaining channels will not prevent the protective function.) If one channel is tripped, the logic becomes one-out-of-three, while still meeting the single failure criterion. (A failure in one of the three remaining channels will not prevent the protective function.) If one channel is bypassed and one channel is tripped, the logic becomes one-out-of-two, while still meeting the single failure criterion. The [6] hours allowed to place the inoperable channel(s) in the bypassed or tripped condition is justified in Reference [7].

NRC 195

BASES

ACTIONS (continued)

In addition to placing the inoperable channel(s) in the bypassed or tripped condition, THERMAL POWER must be reduced to ≤ 75% RTP within 12 hours. Reducing the power level prevents operation of the core with radial power distributions beyond the design limits. With one or two of the PMS power range detectors inoperable, partial radial power distribution monitoring capability is lost. However, the protective function would still function even with a single failure of one of the two remaining channels.

NRC 195

As an alternative to reducing power, the inoperable channel(s) can be placed in the bypassed or tripped condition within [6] hours and the QPTR monitored every 12 hours as per SR 3.2.4.2, QPTR verification. Calculating QPTR compensates for the lost monitoring capability and allows continued plant operation at power levels > 75% RTP. The 12 hour Frequency is consistent with LCO 3.2.4, "QUADRANT POWER TILT RATIO (QPTR)."

Required Action D.2.2 has been modified by a Note which only requires SR 3.2.4.2 to be performed if OPDMS and the Power Range Neutron Flux input to QPTR become inoperable. Power distribution limits are normally verified in accordance with LCO 3.2.5, "OPDMS - Monitored Power Distribution Parameters." However, if OPDMS becomes inoperable, then LCO 3.2.4, "QUADRANT POWER TILT RATIO (QPTR)," becomes applicable. Failure of a component in the Power Range Neutron Flux Channel which renders the High Flux Trip Function inoperable may not affect the capability to monitor QPTR. If either OPDMS or the channel input to QPTR is OPERABLE, then performance of SR 3.2.4.2 once per 12 hours is not necessary.

As an alternative to the above Actions, the plant must be placed in a MODE where this Function is no longer required OPERABLE. Twelve hours are allowed to place the plant in MODE 3. This is a reasonable time, based on operating experience, to reach MODE 3 from full power in an orderly manner and without challenging plant systems. If Required Actions cannot be completed within their allowed Completion Times, LCO 3.0.3 must be entered.

E.1.1, E.1.2, and E.2

Condition E applies to the following reactor trip Functions:

- Power Range Neutron Flux – Low;
- Overtemperature ΔT;

BASES

ACTIONS (continued)

- Overpower ΔT;
- Power Range Neutron Flux – High Positive Rate;
- Pressurizer Pressure – High;
- SG Water Level – Low; and
- SG Water Level – High 2.

NRC 195

With one or two channels inoperable, one affected channel must be placed in a bypass or trip condition within [6] hours. If one channel is bypassed, the logic becomes two-out-of-three, while still meeting the single failure criterion. (A failure in one of the three remaining channels will not prevent the protective function.) If one channel is tripped, the logic becomes one-out-of-three, while still meeting the single failure criterion. (A failure in one of the three remaining channels will not prevent the protective function.) If one channel is bypassed and one channel is tripped, the logic becomes one-out-of-two, while still meeting the single failure criterion. The [6] hours allowed to place the inoperable channel(s) in the bypassed or tripped condition is justified in Reference [7].

NRC 195

NRC 195

If the Required Actions described above cannot be met within the specified Completion Times, the unit must be placed in a MODE where this Function is no longer required to be OPERABLE. An additional [6] hours is allowed to place the unit in MODE 3. [Six] hours is a reasonable time, based on operating experience, to reach MODE 3 from full power in an orderly manner and without challenging plant systems.

F.1.1, F.1.2, F.2, and F.3

Condition F applies to the Intermediate Range Neutron Flux trip when above the P-6 setpoint and below the P-10 setpoint. Above the P-6 setpoint and below the P-10 setpoint, the PMS intermediate range detector performs the monitoring functions.

NRC 195

With one or two channels inoperable, one affected channel must be placed in a bypass or trip condition within [2] hours. If one channel is bypassed, the logic becomes two-out-of-three, while still meeting the single failure criterion. (A failure in one of the three remaining channels will not prevent the protective function.) If one channel is tripped, the logic becomes one-out-of-three, while still meeting the single failure criterion. (A failure in one of the three remaining channels will not prevent

BASES

ACTIONS (continued)

NRC 195

the protective function.) If one channel is bypassed and one channel is tripped, the logic becomes one-out-of-two, while still meeting the single failure criterion. The [2] hours allowed to place the inoperable channel(s) in the bypassed or tripped condition is justified in Reference [7].

As an alternative to placing the channel(s) in bypass or trip if THERMAL POWER is greater than the P-6 setpoint but less than the P-10 setpoint, 2 hours are allowed to reduce THERMAL POWER below the P-6 setpoint or to increase the THERMAL POWER above the P-10 setpoint. The PMS Intermediate Range Neutron Flux channels must be OPERABLE when the power level is above the capability of the source range, P-6, and below the capability of the power range, P-10. If THERMAL POWER is greater than the P-10 setpoint, the PMS power range detectors perform the monitoring and protective functions and the intermediate range is not required. The Completion Times allow for a slow and controlled power adjustment below P-6, and takes into account the redundant capability afforded by the two remaining OPERABLE channels and the low probability of their failure during this period.

G.1 and G.2

Condition G applies to three Intermediate Range Neutron Flux trip channels inoperable in MODE 2 above the P-6 setpoint and below the P-10 setpoint. Required Actions specified in this Condition are only applicable when channel failures do not result in reactor trip. Above the P-6 setpoint and below the P-10 setpoint, the PMS intermediate range detector performs the monitoring Functions. With only one intermediate range channel OPERABLE, the Required Actions are to suspend operations involving positive reactivity additions immediately. This will preclude any power level increase since there are insufficient

OPERABLE Intermediate Range Neutron Flux channels to adequately monitor the power rise. The operator must also reduce THERMAL POWER below the P-6 setpoint within 2 hours. Below P-6, the Source Range Neutron Flux channels will be able to monitor the core power level. The Completion Time of 2 hours will allow a slow and controlled power reduction to less than the P-6 setpoint and takes into account the low probability of occurrence of an event during this period that may require the protection afforded by the PMS Intermediate Range Neutron Flux trip.

BASES

ACTIONS (continued)

- RCP Bearing Water Temperature – High (Two Pumps); and
- RCP Speed – Low.

NRC 195

With one or two channels inoperable, one affected channel must be placed in a bypass or trip condition within [6] hours. If one channel is bypassed, the logic becomes two-out-of-three, while still meeting the single failure criterion. (A failure in one of the three remaining channels will not prevent the protective function.) If one channel is tripped, the logic becomes one-out-of-three, while still meeting the single failure criterion. (A failure in one of the three remaining channels will not prevent the protective function.) If one channel is bypassed and one channel is tripped, the logic becomes one-out-of-two, while still meeting the single failure criterion. The [6] hours allowed to place the inoperable channel(s) in the bypassed or tripped condition is justified in Reference [7].

NRC 195

If Required Actions described above cannot be met within the specified Completion Times, the unit must be placed in a MODE where this Function is no longer required to be OPERABLE. A Completion Time of an additional 6 hours is allowed to reduce power < P-10. Allowance of this time interval takes into consideration the redundant capability provided by the remaining two redundant OPERABLE channels and the low probability of occurrence of an event during this period that may require the protection afforded by the Functions associated with Condition K.

L.1.1, L.1.2, and L.2

Condition L is applicable to the Reactor Coolant Flow – Low and RCP Bearing Water Temperature – High reactor trip Functions.

NRC 195

With one or two channels inoperable, one affected channel must be placed in a bypass or trip condition within [6] hours. If one channel is bypassed, the logic becomes two-out-of-three, while still meeting the single failure criterion. (A failure in one of the three remaining channels will not prevent the protective function.) If one channel is tripped, the logic becomes one-out-of-three, while still meeting the single failure criterion. (A failure in one of the three remaining channels will not prevent the protective function.) If one channel is bypassed and one channel is tripped, the logic becomes one-out-of-two, while still meeting the single failure criterion. The [6] hours allowed to place the inoperable channel(s) in the bypassed or tripped condition is justified in Reference [7].

NRC 195

BASES

ACTIONS (continued)

If Required Actions described above cannot be met within the specified Completion Times, the unit must be placed in a MODE where this Function is no longer required to be OPERABLE. A Completion Time of an additional 4 hours is allowed to reduce power < P-10. Allowance of this time interval takes into consideration the redundant capability provided by the remaining two redundant OPERABLE channels and the low probability of occurrence of an event during this period that may require the protection afforded by this Function.

M.1 and M.2

Condition M applies to the Safeguards Actuation signal from ESFAS reactor trip, the RTS Automatic Trip Logic, automatic ADS Stages 1, 2, and 3 actuation, and automatic CMT injection in MODES 1 and 2.

With one or two channels or divisions inoperable, the Required Action is to restore three of the four channels/divisions within 6 hours. Restoring all channels/divisions but one to OPERABLE status ensures that a single failure will neither cause nor prevent the protective function. The 6 hour Completion Time is considered reasonable since the protective function will still function.

If Required Actions described above cannot be met within the specified Completion Times, the unit must be placed in a MODE where this Function is no longer required to be OPERABLE. A Completion Time of an additional 6 hours is allowed to place the unit in MODE 3. The Completion Time is a reasonable time, based on operating experience, to reach MODE 3 from full power in an orderly manner and without challenging plant systems. Allowance of this time interval takes into consideration the redundant capability provided by the remaining two redundant OPERABLE channels/divisions and the low probability of occurrence of an event during this period that may require the protection afforded by this Function.

N.1, N.2.1, N.2.2, and N.3

Condition N applies to the P-6, P-10, and P-11 interlocks. With one or two channels inoperable, the associated interlock must be verified to be in its required state for the existing plant condition within 1 hour, or the Functions associated with inoperable interlocks placed in a bypassed or tripped condition within [7] hours, or the unit must be placed in MODE 3 within [13] hours. Verifying the interlock manually accomplishes the interlock condition.

NRC 195

BASES

ACTIONS (continued)

NRC 195

If one interlock channel is inoperable, the associated Function(s) must be placed in a bypass or trip condition within [7] hours. If one channel is bypassed, the logic becomes two-out-of-three, while still meeting the single failure criterion. (A failure in one of the three remaining channels will not prevent the protective function.) If one channel is tripped, the logic becomes one-out-of-three, while still meeting the single failure criterion. (A failure in one of the three remaining channels will not prevent the protective function.)

NRC 195

NRC 195

If two interlock channels are inoperable, one channel of the associated Function(s) must be bypassed and one channel of the associated Function(s) must be tripped. In this state, the logic becomes one-out-of-two, while still meeting the single failure criterion. The [7] hours allowed to place the inoperable channel(s) in the bypassed or tripped condition is justified in Reference [7].

If placing the associated Functions in bypass or trip is impractical, for instance as the result of other channels in bypass or trip, the Completion Time of an additional 6 hours is reasonable, based on operating experience, to reach MODE 3 from full power in an orderly manner and without challenging plant systems.

O.1, O.2.1, and O.2.2

Condition O applies to the RTBs, and RTB undervoltage and shunt trip mechanisms in MODES 1 and 2, and in MODES 3, 4, and 5 with the RTBs closed and the PLS capable of rod withdrawal. This Condition is primarily associated with mechanical damage that can prevent the RTBs from opening.

With one division inoperable, the reactor trip breakers in the inoperable division must be opened within 8 hours. A division is inoperable, if, within that division, one or both of the RTBs and/or one or both of the trip mechanisms is inoperable.

With one division inoperable (with its RTBs open) and with three OPERABLE divisions remaining, the trip logic becomes one-out-of-three. The one-out-of-three trip logic meets the single failure criterion. (A failure in one of the three remaining divisions will not prevent the protective function.) If, coincident with RTBs inoperable in one division, the automatic trip logic is inoperable in another division, the trip logic becomes one-out-of-two, which meets the single failure criterion.

BASES

ACTIONS (continued)

NRC 195

source range performs the monitoring and protection functions. With one or two of the source range channels inoperable, [48] hours is allowed to restore three of the four channels to an OPERABLE status. If the channels cannot be returned to an OPERABLE status, 1 additional hour is allowed to open the RTBs. Once the RTBs are open, the core is in a more stable condition and the unit enters Condition L. The allowance of 48 hours to restore the channel to OPERABLE status, and the additional hour to open the RTBs, are justified in Reference [7].

NRC 195

S.1, S.2, and S.3

Condition S applies when the required Source Range Neutron Flux channel is inoperable in MODE 3, 4, or 5 with the RTBs open. With the unit in this Condition, the NIS source range performs the monitoring and protection functions. With the required source range channel inoperable, operations involving positive reactivity additions shall be suspended immediately. This will preclude any power escalation. In addition to suspension of positive reactivity additions, all valves that could add unborated water to the RCS must be closed within 1 hour as specified in LCO 3.9.2. The isolation of unborated water sources will preclude a boron dilution accident.

Also, the SDM must be verified within 1 hour and once every 12 hours thereafter as per SR 3.1.1.1, SDM verification. With no source range channels OPERABLE, core protection is severely reduced. Verifying the SDM within 1 hour allows sufficient time to perform the calculations and determine that the SDM requirements are met. The SDM must also be verified once per 12 hours thereafter to ensure that the core reactivity has not changed. Required Action L.11 precludes any positive reactivity additions; therefore, core reactivity should not be increasing, and a 12 hour Frequency is adequate. The Completion Times of within 1 hour and once per 12 hours are based on operating experience in performing the Required Actions and the knowledge that unit conditions will change slowly.

SURVEILLANCE REQUIREMENTS

The SRs for each RTS Function are identified in the SRs column of Table 3.3.1-1 for that Function.

A Note has been added to the SR table stating that Table 3.3.1-1 determines which SRs apply to which RTS Functions.

BASES

SURVEILLANCE REQUIREMENTS (continued)

A Note modifies SR 3.3.1.4. The Note states that this Surveillance is required only if reactor power is > 50% RTP and that 24 hours is allowed for performing the first surveillance after reaching 50% RTP.

The Frequency of 92 EFPD is adequate. It is based on industry operating experience, considering instrument reliability and operating history data for instrument drift.

SR 3.3.1.5

SR 3.3.1.5 is the performance of a TADOT every 92 days on a STAGGERED TEST BASIS. This test shall verify OPERABILITY by actuation of the end devices.

The Reactor Trip Breaker (RTB) test shall include separate verification of the undervoltage and shunt trip mechanisms. Each RTB in a division shall be tested separately in order to minimize the possibility of an inadvertent trip.

The Frequency of every 92 days on a STAGGERED TEST BASIS is adequate. It is based on industry operating experience, considering instrument reliability and operating history data. In addition, the AP1000 design provides additional breakers to enhance reliability.

The SR is modified by a Note to clarify that both breakers in a single division are to be tested during each STAGGERED TEST.

SR 3.3.1.6

NRC 195 | SR 3.3.1.6 is the performance of a REACTOR TRIP CHANNEL OPERATIONAL TEST (RTCOT) every [92] days~~24 months~~.

A RTCOT is performed on each required channel to provide reasonable assurance that the entire channel will perform the intended Function.

A test subsystem is provided with the protection and safety monitoring system to aid the plant staff in performing the RTCOT. The test subsystem is designed to allow for complete functional testing by using a combination of system self checking features, functional testing features, and other testing features. Successful functional testing consists of verifying that the capability of the system to perform the safety function has not failed or degraded.

BASES

SURVEILLANCE REQUIREMENTS (continued)

For hardware functions this would involve verifying that the hardware components and connections have not failed or degraded. Generally this verification includes a comparison of the outputs from two or more redundant subsystems or channels.

Since software does not degrade, software functional testing involves verifying that the software code has not changed and that the software code is executing.

To the extent possible, protection and safety monitoring system functional testing is accomplished with continuous system self-checking features and the continuous functional testing features. The RTCOT shall include a review of the operation of the test subsystem to verify the completeness and adequacy of the results.

If the RTCOT can not be completed using the built-in test subsystem, either because of failures in the test subsystem or failures in redundant channel hardware used for functional testing, the RTCOT can be performed using portable test equipment.

NRC 195

This test frequency of [92] days~~24 months~~ is justified based on Reference [7] and the use of continuous diagnostic test features, such as deadman timers, cross-check of redundant channels, memory checks, numeric coprocessor checks, and tests of timers, counters and crystal time bases, which will report a failure within the protection and safety monitoring system cabinets to the operator within 10 minutes of a detectable failure.

SR 3.3.1.6 is modified by a note that provides a 4 hour delay in the requirement to perform this Surveillance for source range instrumentation when entering MODE 3 from MODE 2. This note allows a normal shutdown to proceed without a delay for testing in MODE 2 and for a short time in MODE 3 until the RTBs are open and SR 3.3.1.6 is no longer required to be performed. If the unit is to be in MODE 3 with the RTBs closed for a time greater than 4 hours, this Surveillance must be performed prior to 4 hours after entry into MODE 3.

During the RTCOT, the protection and safety monitoring system cabinets in the division under test may be placed in bypass.

SR 3.3.1.7

SR 3.3.1.7 is the performance of a RTCOT as described in SR 3.3.1.6, except it is modified by a Note that this test shall include verification that the P-6 and P-10 interlocks are in their required state for the existing unit

BASES

SURVEILLANCE REQUIREMENTS (continued)

measure response times. Experience has shown that these components usually pass this surveillance when performed on a refueling frequency. Therefore, the Frequency was concluded to be acceptable from a reliability standpoint.

The SR 3.3.1.11 is modified by exempting neutron detectors from response time testing. A Note to the Surveillance indicates that neutron detectors may be excluded from RTS RESPONSE TIME testing. This Note is necessary because of the difficulty in generating an appropriate detector input signal. Excluding the detectors is acceptable because the principles of detector operation ensure a virtually instantaneous response.

REFERENCES

1. Chapter 6.0, “Engineered Safety Features.”

2. Chapter 7.0, “Instrumentation and Controls.”

3. Chapter 15.0, “Accident Analysis.”

4. WCAP-16361-P, “Westinghouse Setpoint Methodology for Protection Systems – AP1000,” May 2006 (proprietary).

5. Institute of Electrical and Electronic Engineers, IEEE-603-1991, “IEEE Standard Criteria for Safety Systems for Nuclear Power Generating Stations,” June 27, 1991.

6. 10 CFR 50.49, “Environmental Qualifications of Electric Equipment Important to Safety for Nuclear Power Plants.”

NRC 195

7. [WCAP-10271-P-A (Proprietary) and WCAP-10272-A (Non-Proprietary), “Evaluation of Surveillance Frequencies and Out-of-Service Times for the Reactor Protection Instrumentation System,” Supplement 2, Revision 1, June 1990.]~~APP-GW-GSC-020, “Technical Specification Completion Time and Surveillance Frequency Justification.”~~

8. NRC Generic Letter No. 83-27, Surveillance Intervals in Standard Technical Specifications.

9. ESBU-TB-97-01, Westinghouse Technical Bulletin, “Digital Process Rack Operability Determination Criteria,” May 1, 1997.

10. WCAP-13632-P-A (Proprietary) and WCAP-13787-A (Non-Proprietary), Revision 2, “Elimination of Pressure Sensor Response Time Testing Requirements,” January 1996.

BASES

ACTIONS (continued)

When the number of inoperable channels in a trip function exceed those specified in one or other related Conditions associated with a trip function, then the plant is outside the safety analysis. Therefore, LCO 3.0.3 in MODES 1 through 4 and LCO 3.0.8 for MODE 5 and 6 should be immediately entered if applicable in the current MODE of operation.

A.1

Condition A is applicable to all ESFAS protection Functions. Condition A addresses the situation where one or more channels/divisions for one or more functions are inoperable at the same time. The Required Action is to refer to Table 3.3.2-1 and to take the Required Actions for the protection Functions affected. The Completion Times are those from the referenced Conditions and Required Actions.

B.1 and B.2

NRC 195

With one or two channels or divisions inoperable, one affected channel or division must be placed in a bypass or trip condition within [6] hours. If one channel or division is bypassed, the logic becomes two-out-of-three, while still meeting the single failure criterion. (A failure in one of the three remaining channels or divisions will not prevent the protective function.) If one channel or division is tripped, the logic becomes one-out-of-three, while still meeting the single failure criterion. (A failure in one of the three remaining channels or divisions will not prevent the protective function.) If one channel or division is bypassed and one channel or division is tripped, the logic becomes one-out-of-two, while still meeting the single failure criterion. The [6] hours allowed to place the inoperable channel(s) or division(s) in the bypassed or tripped condition is justified in Reference [6].

NRC 195

NRC 195

C.1

NRC 195

With one channel inoperable, the affected channel must be placed in a bypass condition within [6] hours. The [6] hours allowed to place the inoperable channel in the bypass condition is justified in Reference [6]. If one CVS isolation channel is bypassed, the logic becomes one-out-of-one. A single failure in the remaining channel could cause a spurious CVS isolation. Spurious CVS isolation, while undesirable, would not cause an upset plant condition.

D.1

With one required division inoperable, the affected division must be restored to OPERABLE status within 6 hours.

BASES

ACTIONS (continued)

Condition H is applicable to the PRHR heat exchangers actuation on SG Narrow Range Water Level Low coincident with Startup Feedwater Flow Low (Function 13.b). With one startup feedwater channel inoperable, the inoperable channel must be placed in a trip condition within 6 hours. If one channel is tripped, the interlock condition is satisfied. Condition H is also applicable to Refueling Cavity Isolation (Function 24.a). With one of the three spent fuel pool level channels

inoperable, the inoperable channel must be placed in a trip condition within 6 hours. If one channel is tripped, the logic becomes one-out-of-two, while still meeting the single failure criterion. The specified Completion Time is reasonable considering the time required to complete this action.

I.1 and I.2

Condition I applies to IRWST containment recirculation valve actuation on safeguards actuation coincident with IRWST Level Low 3 (Function 23.b). With one or two channels inoperable, one affected channel must be placed in a bypass or trip condition within [6] hours. If one channel is bypassed, the logic becomes two-out-of-three, while still meeting the single failure criterion. (A failure in one of the three remaining channels will not prevent the protective function.) If one channel is tripped, the logic becomes one-out-of-three, while still meeting the single failure criterion. (A failure in one of the three remaining channels will not prevent the protective function.) If one channel is bypassed and one channel is tripped, the logic becomes one-out-of-two, while still meeting the single failure criterion. The [6] hours allowed to place the inoperable channel(s) in the bypassed or tripped condition is justified in Reference [6].

NRC 195

NRC 195

J.1 and J.2

Condition J applies to the P-6, P-11, P-12, and P-19 interlocks. With one or two required channel(s) inoperable, the associated interlock must be verified to be in its required state for the existing plant condition within 1 hour, or any Function channels associated with inoperable interlocks placed in a bypassed condition within [7] hours. Verifying the interlock state manually accomplishes the interlock role.

NRC 195

If one interlock channel is inoperable, the associated Function(s) must be placed in a bypass or trip condition within [7] hours. If one channel is bypassed, the logic becomes two-out-of-three, while still meeting the single failure criterion. (A failure in one of the three remaining channels will not prevent the protective function.) If one channel is tripped, the logic becomes one-out-of-three, while still meeting the single failure criterion. (A failure in one of the three remaining channels will not prevent the protective function.)

NRC 195

BASES

ACTIONS (continued)

If two interlock channels are inoperable, one channel of the associated Function(s) must be bypassed and one channel of the associated

Function(s) must be tripped. In this state, the logic becomes one-out-of-two, while still meeting the single failure criterion. The [7] hours allowed to place the inoperable channel(s) in the bypassed or tripped condition is justified in Reference [6].

NRC 195

NRC 195

K.1

LCO 3.08 is applicable while in MODE 5 or 6. Since irradiated fuel assembly movement can occur in MODE 5 or 6, the ACTIONS have been modified by a Note stating that LCO 3.0.8 is not applicable. If moving irradiated fuel assemblies while in MODE 5 or 6, the fuel movement is independent of shutdown reactor operations. Entering LCO 3.0.8 while in MODE 5 or 6 would require the optimization of plant safety, unnecessarily.

Condition K is applicable to the MCR Isolation and Air Supply Initiation (Function 20), during movement of irradiated fuel assemblies. If the Required Action and associated Completion Time of the first Condition listed in Table 3.3.2-1 is not met, the plant must suspend movement of the irradiated fuel assemblies immediately. The required action suspends activities with potential for releasing radioactivity that might enter the MCR. This action does not preclude the movement of fuel to a safe position.

L.1

If the required Action and associated Completion Time of the first Condition listed in Table 3.3.2-1 is not met, the plant must be placed in a MODE in which the LCO does not apply. This accomplished by placing the plant in MODE 3 within 6 hours. The allowed time is reasonable, based operating experience, to reach the required plant conditions from full power conditions in an orderly manner without challenging plant systems.

M.1 and M.2

If the Required Action and associated Completion Time of the first condition listed in Table 3.3.2-1 is not met, the plant must be placed in a MODE in which the LCO does not apply. This is accomplished by placing the plant in MODE 3 within 6 hours and in MODE 4 within 12 hours. The allowed Completion Times are reasonable, based on operating experience, to reach the required plant conditions from full power conditions in an orderly manner without challenging plant systems.

BASES

SURVEILLANCE REQUIREMENTS (continued)

The Frequency of every 92 days on a STAGGERED TEST BASIS provides a complete test of all four divisions once per year. This frequency is adequate based on the inherent high reliability of the solid state devices which comprise this equipment; the additional reliability provided by the redundant subsystems; and the use of continuous diagnostic test features, such as deadman timers, memory checks, numeric coprocessor checks, cross-check of redundant subsystems, and tests of timers, counters, and crystal time basis, which will report a failure within these cabinets to the operator.

SR 3.3.2.3

SR 3.3.2.3 is the performance of a TADOT of the manual actuations, initiations, and blocks for various ESF Functions, the Class 1E battery charger undervoltage inputs, and the reactor trip (P-4) input from the IPCs. This TADOT is performed every 24 months.

The Frequency is based on the known reliability of the ESF Functions and the multichannel redundancy available, and has been shown to be acceptable through operating experience.

The SR is modified by a Note that excludes verification of setpoints from the TADOT. The setpoints for the Class 1E battery charger undervoltage relays require bench calibration and are verified during CHANNEL CALIBRATION. The other functions have no setpoints associated with them.

SR 3.3.2.4

SR 3.3.2.4 is the performance of a CHANNEL CALIBRATION every 24 months or approximately at every refueling. CHANNEL CALIBRATION is a complete check of the instrument loop, including the sensor and the IPC.

The Frequency is based on operating experience and consistency with the refueling cycle.

This Surveillance Requirement is modified by a Note. The Note states that this test should include verification that the time constants are adjusted to the prescribed values where applicable.

SR 3.3.2.5

NRC 195 SR 3.3.2.5 is the performance of an CHANNEL OPERATIONAL TEST (COT) every [92] days~~24 months~~.

BASES

SURVEILLANCE REQUIREMENTS (continued)

A COT is performed on each required channel to provide reasonable assurance that the entire channel will perform the intended ESF Function.

A test subsystem is provided with the protection and safety monitoring system to aid the plant staff in performing the COT. The test subsystem is designed to allow for complete functional testing by using a combination of system self-checking features, functional testing features, and other testing features. Successful functional testing consists of verifying that the capability of the system to perform the safety function has not failed or degraded.

For hardware functions this would involve verifying that the hardware components and connections have not failed or degraded. Generally this verification includes a comparison of the outputs from two or more redundant subsystems or channels.

Since software does not degrade, software functional testing involves verifying that the software code has not changed and that the software code is executing.

To the extent possible, protection and safety monitoring system functional testing is accomplished with continuous system self-checking features and the continuous functional testing features. The COT shall include a review of the operation of the test subsystem to verify the completeness and adequacy of the results.

If the COT can not be completed using the built-in test subsystem, either because of failures in the test subsystem or failures in redundant channel hardware used for functional testing, the COT can be performed using portable test equipment.

NRC 195

The [92] day~~24 month~~ Frequency is based on Reference [6] and the use of continuous diagnostic test features, such as deadman timers, cross-check of redundant channels, memory checks, numeric coprocessor checks, and tests of timers, counters and crystal time bases, which will report a failure within the integrated protection cabinets to the operator.

During the COT, the protection and safety monitoring system cabinets in the division under test may be placed in bypass.

SR 3.3.2.6

This SR ensures the individual channel ESF RESPONSE TIMES are less than or equal to the maximum values assumed in the accident analysis.

BASES

SURVEILLANCE REQUIREMENTS (continued)

The Frequency of 24 months is based on the need to perform this surveillance during periods in which the plant is shutdown for refueling to prevent any upsets of plant operation. This Frequency is adequate based on the use of multiple circuit breakers to prevent the failure of any single circuit breaker from disabling the function and that all circuit breakers are tested.

REFERENCES

1. Chapter 6, "Engineered Safety Features."

2. Chapter 7, "Instrumentation and Controls."

3. Chapter 15, "Accident Analysis."

4. Institute of Electrical and Electronic Engineers, IEEE-603-1991, "IEEE Standard Criteria for Safety Systems for Nuclear Power Generating Stations," June 27, 1991.

5. 10 CFR 50.49, "Environmental Qualification of Electric Equipment Important to Safety for Nuclear Power Plants."

NRC 195

6. [WCAP-10271-P-A (Proprietary) and WCAP-10272-A (Non-Proprietary), Supplement 2, Rev. 1, "Evaluation of Surveillance Frequencies and Out-of-Service Times for the Reactor Protection Instrumentation System," dated June 1990.]~~APP-GW-GSC-020, "Technical Specification Completion Time and Surveillance Frequency Justification."~~

7. 10 CFR 50, Appendix A, "General Design Criteria for Nuclear Power Plants."

8. NUREG-1218, "Regulatory Analysis for Resolution of USI A-47," 4/88.

9. WCAP-16361-P, "Westinghouse Setpoint Methodology for Protection Systems – AP1000," May 2006 (proprietary).

10. ESBU-TB-97-01, Westinghouse Technical Bulletin, "Digital Process Rack Operability Determination Criteria," May 1, 1997.

11. WCAP-13632-P-A (Proprietary) and WCAP-13787-A (Non-Proprietary), Revision 2, "Elimination of Pressure Sensor Response Time Testing Requirements," January 1996.

APP-GW-GLR-134

Revision 3

Attachment A

Tier 2

APP-GW-GLR-134
Revision 3

Attachment A

AP1000 DCD Impact Report

APP-GW-GL-700, Revision 16, "AP1000 Design Control Document"

DCD Section	*Westinghouse Status*	*Tracking Number*	*DCD Category*	*Change Criteria*
3.6.4.1, 3.9.8.2	**Accepted for Revision 17 of the DCD and Revision 3 of TR 134**	**NRC199**	**Tier 2**	**NRC Prior Approval Not Required**

Description:

NRC199 contains COL holder information items to address NRC acceptance issues.

Reference Information:

Attachment B

DCD Markup Pages

APP-GW-GLR-134
Revision 3

The work performed to support the issuance of APP-GW-GLR-074 (Reference 16) is deemed adequate to establish the licensing basis in the area of pipe break hazard analysis. As explained in APP-GW-GLR-021, which discusses AP1000 As-Built COL Information Items, the timing of the reconciliation of the pipe break hazard analysis is such that the reconciliation cannot be provided by an applicant for a COL. This reconciliation will be done prior to operation of the plant.

The following words represent the original Combined License Information item commitment, which has been addressed as discussed above:

Combined License applicants referencing the AP1000 certified design will complete the final pipe whip restraint design and address as-built reconciliation of the pipe break hazards analysis in accordance with the criteria outlined in subsections 3.6.1.3.2 and 3.6.2.5. The as-built pipe rupture hazard analysis will be documented in an as-built Pipe Rupture Hazards Analysis Report.

After a Combined License is issued, the following activities will be completed by the COL holder:

Combined License holders referencing the AP1000 certified design will complete the pipe whip restraint design and complete an as-designed pipe break hazards analysis in accordance with the criteria outlined in subsections 3.6.1.3.2 and 3.6.2.5. The as-designed pipe rupture hazard analysis including break locations based on as-designed pipe analysis will be documented in an as-designed~~built~~ Pipe Rupture Hazards Analysis Report. NRC 199

A pipe rupture hazard analysis is part of the piping design. It is used to identify postulated break locations and layout changes, support design, whip restraint design, and jet shield design. The final design for these activities will be completed prior to fabrication and installation of the piping and connected components. The as-built reconciliation of the pipe break hazards analysis in accordance with the criteria outlined in subsections 3.6.1.3.2 and 3.6.2.5 will be completed prior to fuel load.

3.6.4.2 Leak-before-Break Evaluation of as-Designed Piping

The Combined License information requested in this subsection has been completely addressed in APP-GW-GLR-022 (Reference 15), and the applicable changes are incorporated into the DCD. No additional work is required by the Combined License applicant.

The following words represent the original Combined License Information item commitment, which has been addressed as discussed above:

Combined License applicants referencing the AP1000 certified design will complete the leak-before-break evaluation by comparing the results of the as-designed piping stress analysis with the bounding analysis curves documented in Appendix 3B. The Combined License applicant may perform leak-before-break evaluation for a specific location and loading for cases not covered by the bounding analysis curves. Successfully satisfying the bounding analysis curve limits in Appendix 3B may necessitate lowering the detection limit for unidentified leakage in containment from 0.5 gpm to 0.25 gpm. If so, the Combined License holder shall provide a leak detection system capable of detecting a 0.25 gpm leak

COL Holder Activities

After a Combined License is issued, the following activities are completed by the COL holder:

A Combined License holder referencing the AP1000 design will have available for NRC audit the design specifications and as-designed design reports prepared for major ASME Section III components and ASME Code, Section III piping.

NRC 199

A Combined License holder referencing the AP1000 design will have available for NRC audit the design specifications prepared for ASME Section III auxiliary components and valves.

Reconciliation of the as-built piping (verification of the thermal cycling and stratification loadings considered in the stress analysis discussed in subsection 3.9.3.1.2) is completed by the COL holder after the construction of the piping systems and prior to fuel load (Reference 33).

The following words represent the original Combined License Information item commitment, which has been addressed as discussed above:

Combined License applicants referencing the AP1000 design will have available for NRC audit the design specifications and design reports prepared for ASME Section III components. Combined License applicants will address consistency of the reactor vessel core support materials relative to known issues of irradiation-assisted stress corrosion cracking or void swelling (see subsection 4.5.2.1). [*The design report for the ASME Class 1, 2, and 3 piping will include the reconciliation of the as-built piping as outlined in subsection 3.9.3. This reconciliation includes verification of the thermal cycling and stratification loadings considered in the stress analysis discussed in subsection 3.9.3.1.2.*]*

3.9.8.3 Snubber Operability Testing

Combined License applicants referencing the AP1000 design will develop a program to verify operability of essential snubbers as outlined in subsection 3.9.3.4.3.

3.9.8.4 Valve Inservice Testing

Combined License applicants referencing the AP1000 design will develop an inservice test program in conformance with the valve inservice test requirements outlined in subsection 3.9.6 and Table 3.9-16. For power-actuated valves, the requirements for operability testing shall be based on subsection 3.9.6.2.2. This program will include provisions for nonintrusive check valve testing methods and the program for valve disassembly and inspection outlined in subsection 3.9.6.2.3. The Combined License applicant will complete an evaluation as identified in subsection 3.9.6.2.2 to determine the frequency of power-operated valve operability testing.

*NRC Staff approval is required prior to implementing a change in this information; see DCD Introduction Section 3.5.

APP-GW-GLR-134

Revision 4

Attachment A

Tier 1

APP-GW-GLR-134
Revision 4

Attachment A

AP1000 DCD Impact Report

APP-GW-GL-700, Revision 16, "AP1000 Design Control Document"

DCD Section	*Westinghouse Status*	*Tracking Number*	*DCD Category*	*Change Criteria*
Tier 1 - Table 5.0-1	**Accepted for Revision 17 of the DCD and Revision 4 of TR 134**	**NRC205**	**Tier 1**	**Requires Prior NRC Approval**

Description:

NRC205 contains corrections to Tier 1, Table 5.0-1 to be consistent with APP-GW-GLE-004, Rev 0 and RAI-TR85-SEB1-31, Rev 1

Reference Information:

APP-GW-GLE-004, Rev 0 **RAI-TR85-SEB1-31, Rev 1**

DCD Section	*Westinghouse Status*	*Tracking Number*	*DCD Category*	*Change Criteria*
Tier 1 - Table 5.0-1	**Accepted for Revision 17 of the DCD and Revision 4 of TR 134**	**NRC201**	**Tier 1**	**Requires Prior NRC Approval**

Description:

NRC201 contains corrections to Tier 1, Table 5.0-1 of DCD Revision 16 to be consistent with APP-GW-GLE-001, Rev 0

Reference Information:

APP-GW-GLE-001, Rev 0

Attachment A

Tier 2

APP-GW-GLR-134
Revision 4

Attachment A

AP1000 DCD Impact Report

APP-GW-GL-700, Revision 16, "AP1000 Design Control Document"

DCD Section	*Westinghouse Status*	*Tracking Number*	*DCD Category*	*Change Criteria*
Figure 1.2-3, Table 1.8-1 (Sheet 3 of 7)	**Accepted for Revision 17 of the DCD and Revision 4 of TR 134**	**NRC209**	**Tier 2**	**NRC Prior Approval Not Required**

Description:

NRC209 contains changes to Figure 1.2-3 from "technical support" to "control support" and Table 1.8-1 (sheet 3 of 7) of the DCD Rev 16 from "technical support center" to "control support area" to be consistent with APP-GW-GLR-107, Rev 1 and RAI-TR107-NSIR-06, Rev 0. An editorial correction was made to Figure 1.2-3 to correct the spelling of "Steam".

Reference Information:

APP-GW-GLR-107 (TR107), Rev 1

RAI-TR107-NSIR-06, Rev 0

DCD Section	*Westinghouse Status*	*Tracking Number*	*DCD Category*	*Change Criteria*
Table 1.7-2 (Sheet 3 of 3), Figure 9.5.1-1 (Sheet 2 of 3)	**Accepted for Revision 17 of the DCD and Revision 4 of TR 134**	**NRC208**	**Tier 2**	**NRC Prior Approval Not Required**

Description:

NRC208 contains changes to Table 1.7-2 (Sheet 3 of 3) and Figure 9.5.1-1 (Sheet 2 of 3) to be consistent with APP-GW-GLE-003, Rev 0

Reference Information:

APP-GW-GLE-003, Rev 0

Attachment A

AP1000 DCD Impact Report

APP-GW-GL-700, Revision 16, "AP1000 Design Control Document"

DCD Section	*Westinghouse Status*	*Tracking Number*	*DCD Category*	*Change Criteria*
Table 1.9-2 (Sheets 6 and 16 of 41), Table 19.59-18 (Sheet 24 of 24)	**Accepted for Revision 17 of the DCD and Revision 4 of TR 134**	**NRC210**	**Tier 2**	**NRC Prior Approval Not Required**

Description:

NRC210 contains editorial changes to Table 1.9-2 (Sheets 6 and 16 of 41) In II.B.5 (1) the word "damages" has been changed to "damaged" and in III.C.2(2) the word "member" has been changed to "members", Table 19.59-18 (Sheet 24 of 24) Item 79 changes the word "resowed" to "resolved."

Reference Information:

DCD Section	*Westinghouse Status*	*Tracking Number*	*DCD Category*	*Change Criteria*
Table 2-1	**Accepted for Revision 17 of the DCD and Revision 4 of TR 134**	**NRC207**	**Tier 2**	**NRC Prior Approval Not Required**

Description:

NRC207 contains corrections to Table 2-1 to be consistent with APP-GW-GLE-004, Rev 0

Reference Information:

APP-GW-GLE-004, Rev 0

Attachment A

AP1000 DCD Impact Report

APP-GW-GL-700, Revision 16, "AP1000 Design Control Document"

DCD Section	*Westinghouse Status*	*Tracking Number*	*DCD Category*	*Change Criteria*
2.5.2.3, 2.5.4.5, 2.5.4.5.3, 2.5.4.5.3.1	**Accepted for Revision 17 of the DCD and Revision 4 of TR 134**	**NRC206**	**Tier 2**	**NRC Prior Approval Not Required**

Description:

NRC206 contains corrections to Section 2.5.2.3, 2.5.4.5, 2.5.4.5.3, and 2.5.4.5.3.1 to be consistent with APP-GW-GLE-004, Rev 0

Reference Information:

APP-GW-GLE-004, Rev 0

DCD Section	*Westinghouse Status*	*Tracking Number*	*DCD Category*	*Change Criteria*
Table 2-1	**Accepted for Revision 17 of the DCD and Revision 4 of TR 134**	**NRC202**	**Tier 2**	**NRC Prior Approval Not Required**

Description:

NRC202 contains changes to Table 2-1 of DCD Revision 16 to be consistent with APP-GW-GLE-001, Rev 0

Reference Information:

APP-GW-GLE-001, Rev 0

AP1000 DCD Impact Report

APP-GW-GL-700, Revision 16, "AP1000 Design Control Document"

DCD Section	Westinghouse Status	Tracking Number	DCD Category	Change Criteria
Table 6.2.2-1 Note 3, Table 6.2.2-2	**Accepted for Revision 17 of the DCD and Revision 4 of TR 134**	**NRC211**	**Tier 2**	**NRC Prior Approval Not Required**

Description:

NRC211 contains an editorial change to Table 6.2.2-1 and Table 6.2.2-2 that changes the reference plant elevation from 298'-9" to 293'-9" to be consistent with Figure 3.8.4-2

Reference Information:

DCD Section	Westinghouse Status	Tracking Number	DCD Category	Change Criteria
Section 11.3.6	**Accepted for Revision 17 of the DCD and Revision 4 of TR 134**	**NRC212**	**Tier 2**	**NRC Prior Approval Not Required**

Description:

NRC212 contains an editorial change to Section 11.3.6 reference 5 to correct a typographical error in the document number from APP-GW-GL(N)-008 to APP-GW-GL(R)-008. The document title for reference 5 was changed to exactly match APP-GW-GLR-008.

Reference Information:

AP1000 DCD Impact Report

APP-GW-GL-700, Revision 16, "AP1000 Design Control Document"

DCD Section	Westinghouse Status	Tracking Number	DCD Category	Change Criteria
Table 15A-6	**Accepted for Revision 17 of the DCD and Revision 4 of TR 134**	**NRC203**	**Tier 2**	**NRC Prior Approval Not Required**

Description:

NRC203 contains changes to Table 15A-6 of DCD Revision 16 to be consistent with APP-GW-GLE-001, Rev 0

Reference Information:

APP-GW-GLE-001, Rev 0

DCD Section	Westinghouse Status	Tracking Number	DCD Category	Change Criteria
Table 15A-7	**Accepted for Revision 17 of the DCD and Revision 4 of TR 134**	**NRC200**	**Tier 2**	**NRC Prior Approval Not Required**

Description:

NRC200 contains corrections to Table 15A-7 of DCD Revision 16 to be consistent with APP-GW-GLE-001, Rev 0

Reference Information:

APP-GW-GLE-001, Rev 0

Attachment A

AP1000 DCD Impact Report

APP-GW-GL-700, Revision 16, "AP1000 Design Control Document"

DCD Section	*Westinghouse Status*	*Tracking Number*	*DCD Category*	*Change Criteria*
Figure 15A-1	**Accepted for Revision 17 of the DCD and Revision 4 of TR 134**	**NRC189**	**Tier 2**	**NRC Prior Approval Not Required**

Description:

NRC189 contains corrections to address inconsistencies discovered during preparation of COL application information. The basis for the change is APP-GW-GLE-001, Rev 0

Reference Information:

APP-GW-GLE-001, Rev 0

DCD Section	*Westinghouse Status*	*Tracking Number*	*DCD Category*	*Change Criteria*
16: TS 2.1.1.1	**Accepted for Revision 17 of the DCD and Revision 4 of TR 134**	**NRC213**	**Tier 2**	**NRC Prior Approval Not Required**

Description:

NRC213 contains an editorial change to safety limits 2.1.1.1 that changes "correlations" to "correlation" to be consistent with APP-GW-GLR-064, Rev 0.

Reference Information:

APP-GW-GLR-064, Rev 0

AP1000 DCD Impact Report

APP-GW-GL-700, Revision 16, "AP1000 Design Control Document"

DCD Section	Westinghouse Status	Tracking Number	DCD Category	Change Criteria
16: TS 3.8.1 B.3	**Accepted for Revision 17 of the DCD and Revision 4 of TR 134**	**NRC214**	**Tier 2**	**NRC Prior Approval Not Required**

Description:

NRC214 contains an editorial change to Section 3.8.1 B.3. A completion time for restoring battery charger(s) to OPERABLE status was inadvertently omitted. The completion time of "7 days" has been added to 3.8.1 B.3.

Reference Information:

DCD Section	Westinghouse Status	Tracking Number	DCD Category	Change Criteria
16: TS 5.2.2	**Accepted for Revision 17 of the DCD and Revision 4 of TR 134**	**NRC204**	**Tier 2**	**NRC Prior Approval Not Required**

Description:

NRC204 contains an editorial correction to Chapter 16, Tech Specs 5.2.2 paragraph b. reference 5.2.2.(g) should be 5.2.2.(f)

Reference Information:

Attachment B

DCD Markup Pages

APP-GW-GLR-134
Revision 4

Table 5.0-1 (cont.)
Site Parameters

	Soil	
	Average Allowable Static Soil Bearing Capacity	Greater than or equal to 8,600 lb/ft^2 over the footprint of the nuclear island at its excavation depth
	Maximum Allowable Dynamic Bearing Capacity for Normal Plus Safe Shutdown Earthquake (SSE)	Greater than or equal to 35,000 lb/ft^2 at the edge of the nuclear island at its excavation depth
	Lateral Variability	Soils supporting the nuclear island should not have extreme variations in subgrade stiffness. This may be demonstrated by one of the following: 1. Soils supporting the nuclear island are uniform in accordance with Regulatory Guide 1.132 if the geologic and stratigraphic features at depths less than 120 feet below grade can be correlated from one boring or sounding location to the next with relatively smooth variations in thicknesses or properties of the geologic units, or 2. Site specific assessment of subsurface conditions demonstrates that the bearing pressures below the footprint of the nuclear island do not exceed 120% of those from the generic analyses of the nuclear island at a uniform site, or 3. Site specific analysis of the nuclear island basemat demonstrates that the site specific demand is within the capacity of the basemat. As an example of sites that are considered uniform, the variation of shear wave velocity in the material below the foundation to a depth of 120 feet below finished grade within the nuclear island footprint meets the criteria in the case outlined below. Case 1: For a layer with a low strain shear wave velocity greater than or equal to 2500 feet per second, the layer should have approximately uniform thickness, should have a dip not greater than 20 degrees, and should have less than 20 percent variation in the shear wave velocity from the average velocity in any layer. ~~Case 2: For a layer with a low strain shear wave velocity less than 2500 feet per second, the layer should have approximately uniform thickness, should have a dip not greater than 20 degrees, and should have less than 10 percent variation in the shear wave velocity from the average velocity in any layer.~~
	Shear Wave Velocity	Greater than or equal to 1000 ft/sec based on low-strain, best-estimate soil properties over the footprint of the nuclear island at its excavation depth
	Liquefaction Potential	Negligible~~None~~

NRC 205

NRC 205

NRC 205

Table 5.0-1 (cont.) Site Parameters	
Seismic	
SSE	SSE free field peak ground acceleration of 0.30 g with modified Regulatory Guide 1.60 response spectra (See Figures 5.0-1 and 5.0-2.). Seismic input is defined at finished grade except for sites where the nuclear island is founded on hard rock. If the site-specific spectra exceed the response spectra in Figures 5.0-1 and 5.0-2 at any frequency, or if soil conditions are outside the range evaluated for AP1000 design certification, a site-specific evaluation can be performed. This evaluation will consist of a site-specific dynamic analysis and generation of in-structure response spectra at key locations to be compared with the floor response spectra of the certified design at 5-percent damping. The site is acceptable if the floor response spectra from the site-specific evaluation do not exceed the AP1000 spectra for each of the locations or the exceedances are justified. The hard rock high frequency (HRHF) ground motion spectra (GMRS) are shown in Figure 5.0-3 and Figure 5.0-4 defined at the foundation level for 5% damping. The HRHF GMRS provide an alternative set of spectra for evaluation of site specific GMRS. A site is acceptable if its site specific GMRS fall within the AP1000 HRHF GMRS.
Fault Displacement Potential	Negligible~~Neglibible~~
Atmospheric Dispersion Factors (X/Q)	
Site Boundary (0-2 hr)	$\leq 1.0 \times 10^{-3}$ sec/m^3
Site Boundary (annual average)	$\leq 2.0 \times 10^{-5}$ sec/m^3
Low Population Zone Boundary	
0 - 8 hr	$\leq 5.0 \times 10^{-4}$ sec/m^3
8 - 24 hr	$\leq 3.0 \times 10^{-4}$ sec/m^3
24 - 96 hr	$\leq 1.5 \times 10^{-4}$ sec/m^3
96 - 720 hr	$\leq 8.0 \times 10^{-5}$ sec/m^3

NRC 205

NRC 205

Table 5.0-1 (cont.)
Site Parameters

Control Room Atmospheric Dispersion Factors (χ /Q) for Accident Dose Analysis						
χ/Q (s/m³) at HVAC Intake for the Identified Release Points[1]						
	Plant Vent or PCS Air Diffuser[3]	**Ground Level Containment Release Points[4]**	**PORV and Safety Valve Releases[5]**	**Steam Line Break Releases**	**Fuel Handling Area[6]**	**Condenser Air Removal Stack[7]**
0 - 2 hours	3.0E-3	6.0E-3	2.0E-2	2.4E-2	6.0E-3	6.0E-3
2 - 8 hours	2.5E-3	4.5E-3	1.8E-2	2.0E-2	4.0E-3	4.0E-3
8 - 24 hours	1.0E-3	2.0E-3	7.0E-3	7.5E-3	2.0E-3	2.0E-3
1 - 4 days	8.0E-4	1.8E-3	5.0E-3	5.5E-3	1.5E-3	1.5E-3
4 - 30 days	6.0E-4	1.5E-3	4.5E-3	5.0E-3	1.0E-3	1.0E-3
χ/Q (s/m³) at Control Room Door for the Identified Release Points[2]						
0 - 2 hours	1.0E-3	1.0E-3	4.0E-3	4.0E-3	6.0E-3	2.0E-2
2 - 8 hours	7.5E-4	7.5E-4	3.2E-3	3.2E-3	4.0E-3	1.8E-2
8 - 24 hours	3.5E-4	3.5E-4	1.2E-3	1.2E-3	2.0E-3	7.0E-3
1 - 4 days	2.8E-4	2.8E-4	1.0E-3	1.0E-3	1.5E-3	5.0E-3
4 - 30 days	2.5E-4	2.5E-4	8.0E-4	8.0E-4	1.0E-3	4.5E-3

NRC 201

NRC 201

Notes:

1. These dispersion factors are to be used 1) for the time period preceding the isolation of the main control room and actuation of the emergency habitability system, 2) for the time after 72 hours when the compressed air supply in the emergency habitability system would be exhausted and outside air would be drawn into the main control room, and 3) for the determination of control room doses when the nonsafety ventilation system is assumed to remain operable such that the emergency habitability system is not actuated.
2. These dispersion factors are to be used when the emergency habitability system is in operation and the only path for outside air to enter the main control room is that due to ingress/egress.
3. These dispersion factors are used for analysis of the doses due to a postulated small line break outside of containment. The plant vent and PCS air diffuser are potential release paths for other postulated events (loss-of-coolant accident, rod ejection accident, and fuel handling accident inside the containment); however, the values are bounded by the dispersion factors for ground level releases.
4. The listed values represent modeling the containment shell as a diffuse area source, and are used for evaluating the doses in the main control room for a loss-of-coolant accident, for the containment leakage of activity following a rod ejection accident, and for a fuel handling accident occurring inside the containment.

NRC 201

5. The listed values bound the dispersion factors for releases from the steam line safety and power-operated relief valves~~, and the condenser air removal stack~~. These dispersion factors would be used for evaluating the doses in the main control room for a steam generator tube rupture, a main steam line break, a locked reactor coolant pump rotor, and the secondary side release from a rod ejection accident.~~ Additionally, these dispersion coefficients are conservative for the small line break outside containment.~~

NRC 201

6. The listed values bound the dispersion factors for releases from the fuel storage and handling area. The listed values also bound the dispersion factors for releases from the fuel storage area in the event that spent fuel boiling occurs and the fuel building relief panel opens on high temperature. These dispersion factors are used for the fuel handling accident occurring outside containment and for evaluating the impact of releases associated with spent fuel pool boiling.

NRC 201

7. This release point is included for information only as a potential activity release point. None of the design basis accident radiological consequences analyses model release from this point.

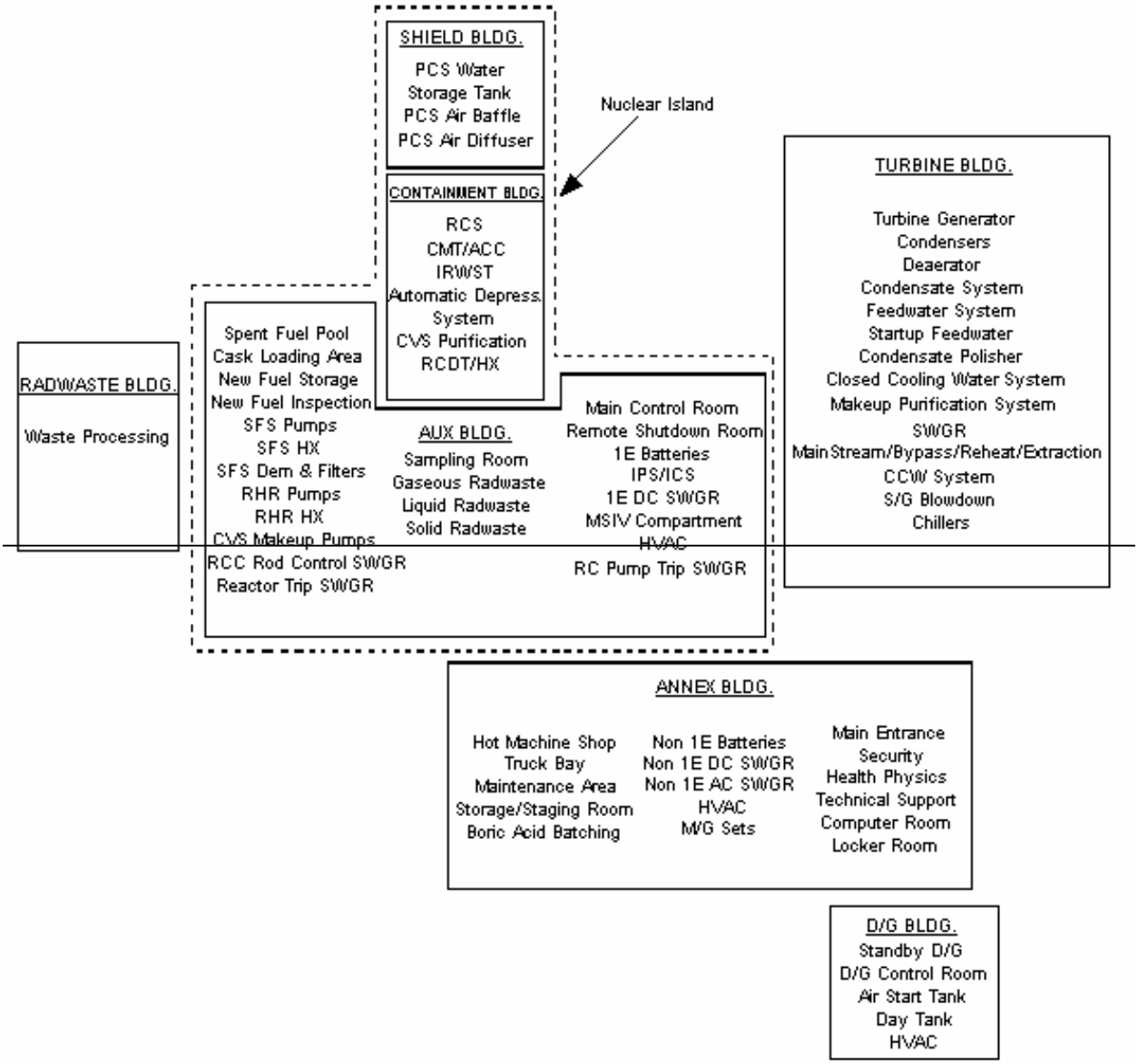
SHIELD BLDG.
PCS Water
Storage Tank
PCS Air Baffle
PCS Air Diffuser
Nuclear Island
CONTAINMENT BLDG.
RCS
CMT/ACC
IRWST
Automatic Depress.
System
CVS Purification
RCDT/HX
TURBINE BLDG.
Turbine Generator
Condensers
Deaerator
Condensate System
Feedwater System
Startup Feedwater
Condensate Polisher
Closed Cooling Water System
Makeup Purification System
SWGR
MainStream/Bypass/Reheat/Extraction
CCW System
S/G Blowdown
Chillers
RADWASTE BLDG.
Waste Processing
Spent Fuel Pool
Cask Loading Area
New Fuel Storage
New Fuel Inspection
SFS Pumps
SFS HX
SFS Dem & Filters
RHR Pumps
RHR HX
CVS Makeup Pumps
RCC Rod Control SWGR
Reactor Trip SWGR
AUX BLDG.
Sampling Room
Gaseous Radwaste
Liquid Radwaste
Solid Radwaste
Main Control Room
Remote Shutdown Room
1E Batteries
IPS/ICS
1E DC SWGR
MSIV Compartment
HVAC
RC Pump Trip SWGR
ANNEX BLDG.
Hot Machine Shop
Truck Bay
Maintenance Area
Storage/Staging Room
Boric Acid Batching
Non 1E Batteries
Non 1E DC SWGR
Non 1E AC SWGR
HVAC
M/G Sets
Main Entrance
Security
Health Physics
Technical Support
Computer Room
Locker Room
D/G BLDG.
Standby D/G
D/G Control Room
Air Start Tank
Day Tank
HVAC

NRC 209

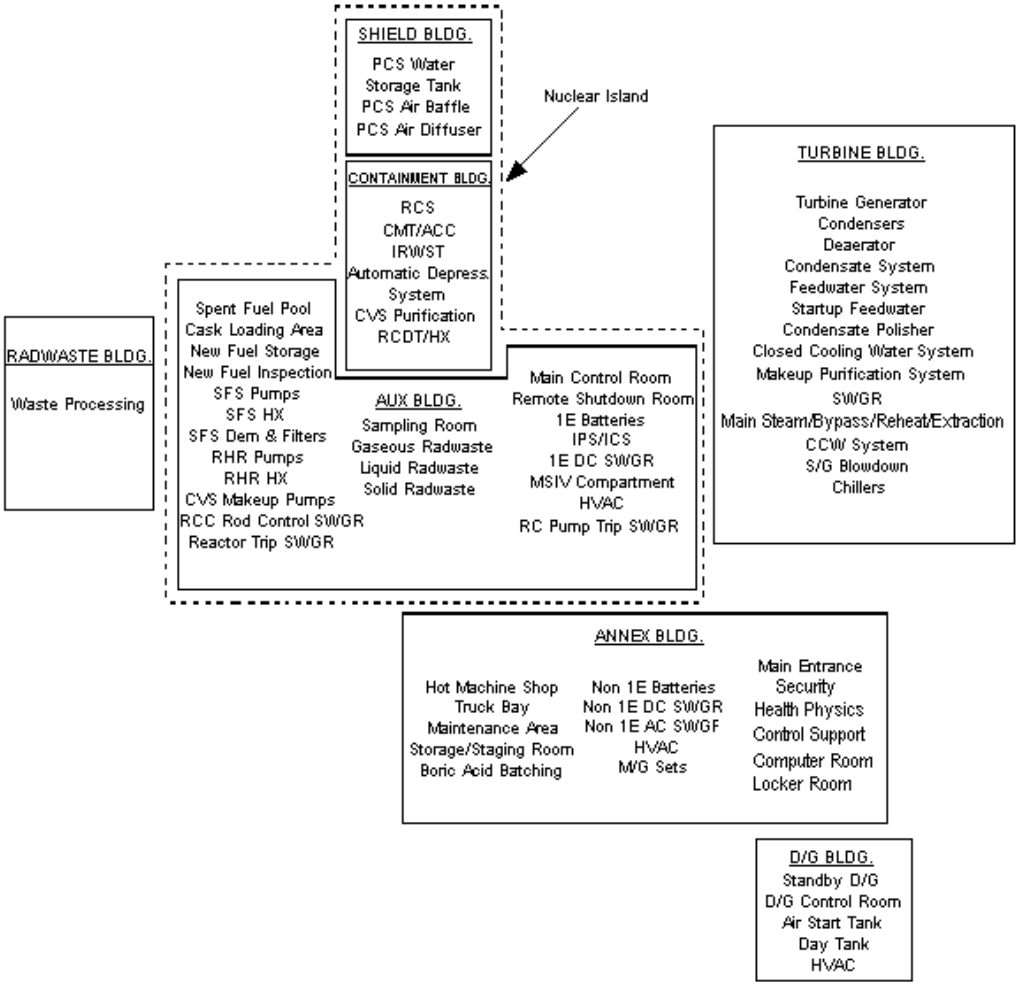

Figure 1.2-3

Functional Allocation of System Components of AP1000 Power Generation Complex

Table 1.7-2 (Sheet 3 of 3)

AP1000 SYSTEM DESIGNATORS AND SYSTEM DIAGRAMS

Designator	System (Note 1)	DCD Section	DCD Figure (Note 2)
TDS	Turbine Island Vents, Drains and Relief System	9.2.9.2.2, 10.4.2.2.1, 10.4.3.1.2, 10.4.3.2.2, 10.4.6.3	None
TOS	Main Turbine Control and Diagnostics System	10.2.2.4	None
TVS	Closed Circuit TV System (Wholly out of scope)	None	None
VAS	Radiologically Controlled Area Ventilation System	9.4.3	9.4.3-1
VBS	Nuclear Island Nonradioactive Ventilation System	9.4.1	9.4.1-1
VCS	Containment Recirculation Cooling System	9.4.6	9.4.6-1
VES	Main Control Room Emergency Habitability System	6.4	6.4-2
VFS	Containment Air Filtration System	9.4.7	9.4.7-1
VHS	Health Physics and Hot Machine Shop HVAC System	9.4.11	9.4.11-1
VLS	Containment Hydrogen Control System	6.2.4	6.2.4 - various
VRS	Radwaste Building HVAC System	9.4.8	9.4.8-1
VTS	Turbine Building Ventilation System	9.4.9	9.4.9-1
VUS	Containment Leak Rate Test System	6.2.5	6.2.5-1
VWS	Central Chilled Water System	9.2.7	9.2.7-1
VXS	Annex/Auxiliary Non-Radioactive Ventilation System	9.4.2	9.4.2-1
VYS	Hot Water Heating System	9.2.10	None
VZS	Diesel Generator Building Ventilation System	9.4.10	9.4.10-1
WGS	Gaseous Radwaste System	11.3	11.3-2
WLS	Liquid Radwaste System	11.2	11.2-2
WRS	Radioactive Waste Drain System	9.3.5, 11.2	9.3.5-1
WSS	Solid Radwaste System	11.4	11.4-1
WWS	Waste Water System (Partially out of scope)	9.2.9	None
NRC 208 YFS	Yard Fire Water System (Wholly out of scope)	None	None
ZAS	Main Generation System (Note 3)	8.1	None
ZBS	Transmission Switchyard and Offsite Power System (Wholly out of scope)	8.2	None
ZOS	Onsite Standby Power System	8.2.1, 8.3.1	8.3.1-4, 8.3.1-5
ZVS	Excitation and Voltage Regulation System	10.2.2.3	None

Table 1.8-1 (Sheet 3 of 7)

SUMMARY OF AP1000 PLANT INTERFACES WITH REMAINDER OF PLANT

Item No.	Interface	Interface Type	Matching Interface Item	Section or Sub-section
6.1	Inservice Inspection requirements for the containment	Requirement of AP1000	Combined License applicant program	6.2.1
6.2	Off site environmental conditions assumed for Main Control Room and control support area~~technical support center~~ habitability design	AP1000 Interface	Site specific parameter	6.4
7.1	Listing of all design criteria applied to the design of the I&C systems	Not an Interface	N/A	7
7.2	Power required for site service water instrumentation	NNS and Not an Interface	N/A	7
7.3	Other provisions for site service water instrumentation	NNS and Not an Interface	N/A	7
8.1	Listing of design criteria applied to the design of the offsite power system	NNS	Combined License applicant coordination	8
8.2	Offsite ac requirements Steady-state load Inrush kVA for motors Nominal voltage Allowable voltage regulation Nominal frequency Allowable frequency fluctuation Maximum frequency decay rate Limiting under frequency value for RCP	NNS	Combined License applicant coordination	8

NRC 209

Table 1.9-2 (Sheet 6 of 41)

LISTING OF UNRESOLVED SAFETY ISSUES AND GENERIC SAFETY ISSUES

Action Plan Item/Issue No.	Title	Applicable Screening Criteria	Notes
II.B.3	Post-Accident Sampling	g	See DCD subsection 1.9.3, item (2)(viii)
II.B.4	Training for Mitigating Core Damage	f	
NRC 210 II.B.5(1)	Behavior of Severely Damaged~~s~~ Fuel	d	
II.B.5(2)	Behavior of Core Melt	d	
II.B.5(3)	Effect of Hydrogen Burning and Explosions on Containment Structures	d	
II.B.6	Risk Reduction for Operating Reactors at Sites with High Population Densities	f	
II.B.7	Analysis of Hydrogen Control	e	
II.B.8	Rulemaking Proceedings on Degraded Core Accidents	g	See DCD subsection 1.9.3, items (1)(i), (1)(xii), (2)(ix), (3)(iv), and (3)(v)
II.C.1	Interim Reliability Evaluation Program	c	
II.C.2	Continuation of Interim Reliability Evaluation Program	c	
II.C.3	Systems Interaction	e	
II.C.4	Reliability Engineering	c	
II.D.1	Testing Requirements	g	See DCD subsection 1.9.3, item (2)(x)
II.D.2	Research on Relief and Safety Valve Test Requirements	a	
II.D.3	Relief and Safety Valve Position Indication	g	See DCD subsection 1.9.3, item (2)(xi)
II.E.1.1	Auxiliary Feedwater System Evaluation	g	See DCD subsection 1.9.3, item (1)(ii)
II.E.1.2	Auxiliary Feedwater System Automatic Initiation and Flow Indication	g	See DCD subsection 1.9.3, items (1)(ii) and (2)(xii)
II.E.1.3	Update Standard Review Plan and Develop Regulatory Guide	d, j	See DCD subsection 1.9.4.2.1, item II.E.1.3

Table 1.9-2 (Sheet 16 of 41)

LISTING OF UNRESOLVED SAFETY ISSUES AND GENERIC SAFETY ISSUES

Action Plan Item/Issue No.	Title	Applicable Screening Criteria	Notes
III.A.3.6(3)	State and Local	c	
III.B.1	Transfer of Responsibilities to FEMA	c	
III.B.2(1)	The Licensing Process	c	
III.B.2(2)	Federal Guidance	c	
III.C.1(1)	Review Publicly Available Documents	d	
III.C.1(2)	Recommend Publication of Additional Information	d	
III.C.1(3)	Program of Seminars for News Media Personnel	d	
III.C.2(1)	Develop Policy and Procedures for Dealing With Briefing Requests	d	
NRC 210 III.C.2(2)	Provide Training for Members of the Technical Staff	d	
III.D.1.1(1)	Review Information Submitted by Licensees Pertaining to Reducing Leakage from Operating Systems	g	See DCD subsection 1.9.3, item (2)(xxvi)
III.D.1.1(2)	Review Information on Provisions for Leak Detection	a	
III.D.1.1(3)	Develop Proposed System Acceptance Criteria	a	
III.D.1.2	Radioactive Gas Management	a	
III.D.1.3(1)	Decide Whether Licensees Should Perform Studies and Make Modifications	a	
III.D.1.3(2)	Review and Revise SRP	a	
III.D.1.3(3)	Require Licensees to Upgrade Filtration Systems	a	
III.D.1.3(4)	Sponsor Studies to Evaluate Charcoal Adsorber	c	
III.D.1.4	Radwaste System Design Features to Aid in Accident Recovery and Decontamination	a	
III.D.2.1(1)	Evaluate the Feasibility and Perform a Value-Impact Analysis of Modifying Effluent-Monitoring Design Criteria	a	
III.D.2.1(2)	Study the Feasibility of Requiring the Development of Effective Means for Monitoring and Sampling Noble Gases and Radioiodine Released to the Atmosphere	a	
III.D.2.1(3)	Revise Regulatory Guides	a	

LIST OF TABLES

Table No.	Title	Page
NRC 207 2-1	Site Parameters (Sheets 1 – ~~3~~4)	2-19

4. In lieu of (1) and (2) above, for a site where the nuclear island is founded on competent rock with shear wave velocity greater than 8000 feet per second and there are thin layers of soft material overlying the rock, the site-specific peak ground acceleration and spectra may be developed at the top of the competent rock and shown at the foundation level to be less than or equal to those given in Figures 3I.1-1 and 3I.1-2.

5. Foundation material layers are approximately horizontal (dip less than 20 degrees), and the median estimate of the low strain shear wave velocity of the soil below the foundation of the nuclear island is greater than or equal to 1000 feet per second.

6. For sites where the nuclear island is founded on soil, the median estimate of the strain-compatible soil shear modulus and hysteretic damping is compared to the values used in the AP1000 generic analyses shown in Table 3.7.1-4 and Figure 3.7.1-17. Properties of soil layers within a depth of 120 feet below finished grade are compared to those in the generic soil site analyses (soft soil, soft-to-medium soil, and upper bound soft-to-medium soil).

7. In lieu of (1) to (6) above, a site-specific evaluation can be performed as described in subsection 2.5.2.3.

Where features of the site are not within the parameters specified for the AP1000, site-specific soil structure interaction analyses may be performed using the 2D SASSI models described in Appendix 3G for variations in site conditions that can be represented in these models. Results should be compared to the results of the 2D SASSI analyses described in Appendix 3G. Such analyses may be used to demonstrate that local features, such as soil degradation properties or backfill, are bounded by the design cases. If the results are not clearly enveloped, then a 3D SASSI analysis may be required.

2.5.2.2 Site-Specific Seismic Structures

The AP1000 includes all seismic Category I structures, systems and components in the scope of the design certification.

2.5.2.3 Sites with Geoscience Parameters Outside the Certified Design

If the site-specific spectra at foundation level exceed the response spectra in Figures 3.7.1-1 and 3.7.1-2 at any frequency, or if soil conditions are outside the range evaluated for AP1000 design certification, a site-specific evaluation can be performed. This evaluation will consist of a site-specific dynamic analysis and generation of in-structure response spectra at six key locations to be compared with the floor response spectra of the certified design at 5-percent damping. The site design response spectra at the foundation level in the free-field given in Figures 3.7.1-1 and 3.7.1-2 were used to develop the floor response spectra. They were applied at foundation level for the hard rock site and at finished grade level for the soil sites. The site is acceptable ~~for construction of the AP1000~~ if the floor response spectra from the site-specific evaluation do not exceed the AP1000 spectra for each of the locations identified below or the exceedances are justified:

NRC 206

NRC 206

2.5.4.5 Subsurface Uniformity

Soil structure interaction and foundation design are a function of the uniformity of the soil or rock below foundation. Although the design and analysis of the AP1000 is based on soil or rock conditions with uniform properties within horizontal layers, it includes provisions and design margins to accommodate many non-uniform sites. This subsection identifies the requirements for site investigation that may be used to demonstrate that:

- A site is "uniform" based on the criteria outlined in subsection 2.5.4.5.3. If the site can be demonstrated to be "uniform," no further site specific analysis is required to qualify the site for the AP1000.

- A "non-uniform" site is acceptable to locate the AP1000 based on the criteria for acceptability outlined in subsection 2.5.4.5.3. ~~Some non-uniform sites are acceptable as described in subsection 2.5.4.5.3 based on evaluation performed as part of design certification. Other n~~Non-uniform sites may be shown to be acceptable as described in subsection 2.5.4.5.3.1 using site-specific evaluation as part of the Combined License application.

NRC 206

Considerations with respect to the materials underlying the nuclear island are the type of site, such as rock or soil, and whether the site can be considered uniform. If the site is non-uniform, the non-uniform soil characteristics, such as the location and profiles of soft and hard spots, should be considered. These considerations can be assessed with the information developed in response to Regulatory Guides 1.132 and 1.138. The geological investigations of subsections 2.5.1 and 2.5.4.6.1 provide information on the uniformity of the site, whether it may be geologically impacted, and whether the bedrock may be sloping or undulatory.

A survey of 22 commercial nuclear power plant sites in the United States focused on site parameters that affect the seismic response such as the depth to bedrock, the type and characteristic of the soil layers, including the variation of shear wave velocities, the depth to the ground water level, and the embedment depth of the plant structures. Of the 22 sites, 11 are rock sites where competent rock exists at relatively shallow depths. At the other sites, the depth to bedrock varies from about 50 feet (Callaway) to well in excess of 4,000 feet (South Texas). A review of these 11 soil sites – all of which are marine, deltaic, or lacustrine deposits – did not reveal any significant variation of soil characteristics below the nuclear island footprint. There was one possible nonuniform site, Monticello, which is underlain by glacial deposits; the geologic description is such that there might be lateral variability in the foundation parameters within the plan dimension of the plant. The review of the 22 commercial nuclear power plant sites in the United States suggests that the majority of AP1000 sites exhibit "uniform" soil properties within the nuclear island footprint.

2.5.4.5.1 Site Investigation for Uniform Sites

For sites that are expected to be uniform, based on the geologic investigation outlined in subsections 2.5.1 and 2.5.4.6.2, Appendix C to Regulatory Guide 1.132 provides guidance on the spacing and depth of borings of the geotechnical investigation for safety-related structures. Specific language in the Regulatory Guide suggests a spacing of 100 feet supplemented with borings on the periphery and at the corners for favorable, uniform geologic conditions.

stratigraphic boundaries, lithologic changes, and unconformities, but most important, they should represent boundaries between layers having different shear wave velocities. Shear wave velocity is the primary property used for defining uniformity of a site.

NRC 206

The distribution of bearing reactions under the basemat is a function of the subgrade modulus, which in turn is a function of the soil properties~~shear wave velocity~~. The Combined License applicant shall demonstrate that the variation of subgrade modulus ~~or shear wave velocity~~ across the footprint is within the range considered for design of the nuclear island basemat. The farther that the non-uniform layer is located below the foundation, the less influence it has on the bearing pressures at the basemat. Lateral variability of the shear wave velocity at depths greater than 120 feet below grade (80 feet below the foundation) do not significantly affect the subgrade modulus.

NRC 206

Subsurface conditions should be evaluated by the Combined License applicant based on the geologic investigation outlined in subsections 2.5.1 and 2.5.4.6.2 in accordance with Regulatory Guide 1.132. Subsurface conditions should be evaluated within the nuclear island footprint and 40 feet beyond the boundaries of the nuclear island footprint at depths less than 120 feet below grade. Subsurface conditions may be considered uniform if the geologic and stratigraphic features can be correlated from one boring or sounding location to the next with relatively smooth variations in thicknesses or properties of the geologic units. An occasional anomaly or a limited number of unexpected lateral variations may occur. If a site can be classified as uniform, it qualifies for the AP1000 based on analyses and evaluations performed to support design certification without additional site-specific analyses.

NRC 206

As an example of~~For a~~ sites that are ~~to be~~ considered uniform, the variation of soil properties ~~shear wave velocity~~ in the material below the foundation to a depth of 120 feet below finished grade within the nuclear island footprint ~~shall~~ meets the criteria outlined below:

- The depth to a given layer indicated on each boring log may not fall precisely on the postulated "best-estimate" plane. The deviation of the observed layers from the "best-estimate" planes should not exceed 5 percent of the observed depths from the ground surface to the plane. If the deviation is greater than 5 percent, additional planes may be appropriate or additional borings may be required. This thereby diminishes the spacing.

- For a layer with a low strain shear wave velocity greater than or equal to 2500 feet per second, the layer should have approximately uniform thickness and should have a dip no greater than 20 degrees, and the shear wave velocity at any location within any layer should not vary from the average velocity within the layer by more than 20 percent.

NRC 206

- ~~For a layer with a low strain shear wave velocity less than 2500 feet per second, the layer should have approximately uniform thickness and should have a dip no greater than 20 degrees, and the shear wave velocity at any location within any layer should not vary from the average velocity within the layer by more than 10 percent.~~

2.5.4.5.3.1 Site-Specific Subsurface Uniformity Design Basis

Many sites that do not meet the above criteria for a uniform site are acceptable for the AP1000. The key attribute for acceptability of the site for an AP1000 is the bearing pressure on the

underside of the basemat. A site having local soft or hard spots within a layer or layers does not meet the criteria for a uniform site. Non-uniform soil conditions may also require evaluation of the AP1000 seismic response as described in subsection 2.5.2.3.

As described in subsection 3.8.5, the nuclear island foundation is designed specifically for bearing pressures of 120 percent of those of the uniform soil properties case. Evaluation criteria are defined to evaluate sites that do not satisfy the site parameters directly. The design basis provided below is included to provide a clear specification of the design commitment and evaluation criteria required to demonstrate that a site-specific application satisfies AP1000 requirements. Application of the AP1000 to sites using this site-specific evaluation is not approved as part of the AP1000 design certification and the evaluation should be provided and reviewed as part of the Combined License application.

Rigid Basemat Evaluation

A site with nonuniform soil properties may be demonstrated to be acceptable by evaluation of the bearing pressures on the underside of a rigid rectangular basemat equivalent to the nuclear island. The soils identified in the site investigation may be included in a finite element model of the soil to analyze the effect of the lateral variability. When the variability identified at the site can be modeled in two dimensions (there is not significant variability in one horizontal direction), 2D analyses may be used. Where the variability occurs in both horizontal directions, a 3D analysis should be performed. Bearing pressures are calculated ~~for dead~~in a linear analysis for unit vertical load and overturning moments.~~safe shutdown earthquake loads. The safe shutdown earthquake loads used for the evaluation are associated with one of the AP1000 design soil cases evaluated for design certification. The soil case representative of the site-specific soil is used.~~ For the site to be acceptable, the bearing pressures from this analysis need to be less than or equal to 120 percent of the bearing pressures calculated in similar analyses for a site having uniform soil properties.

NRC 206

Alternatively, the safe shutdown earthquake loads may be determined from a site-specific seismic analysis of the nuclear island using site-specific inputs as described in subsections 2.5.2.1 or 2.5.2.3~~2~~. For the site to be acceptable, the bearing pressures from the site-specific analyses (with site specific response and site specific soil properties) need to be less than or equal to 120 percent of the bearing pressures calculated in similar rigid basemat analyses using the AP1000 design ground motion at a site having uniform soil properties.

NRC 206

Flexible Basemat Evaluation

For sites having bedrock close to the foundation level, the assumption of a rigid basemat may be overly conservative because local deformation of the basemat will reduce the effect of local soil variability. For such sites, a site-specific analysis may be performed using the AP1000 basemat model and methodology described in subsection 3.8.5. The soils may be represented by soil springs or by a finite element model of the soil depending on the type of variability identified at the site. The safe shutdown earthquake loads are those from the AP1000 design soil case representative of the site-specific soil. Alternatively, bearing pressures may be determined from a site-specific soil structure interaction analysis using site-specific inputs as described in subsection 2.5.2.3~~2~~. For the site to be acceptable, the bearing pressures from the site-specific analyses,

NRC 206

NRC 206

NRC 206 including static and dynamic loads, need to be less than the design bearing strength~~capacity~~ of each portion of the basemat.

2.5.4.6 Combined License Information

Combined License applicants referencing the AP1000 design will address the following site specific information related to the geotechnical engineering aspects of the site. No further action is required for sites within the bounds of the site parameters.

2.5.4.6.1 Site and Structures – Site-specific information regarding the underlying site conditions and geologic features will be addressed. This information will include site topographical features, as well as the locations of seismic Category I structures.

2.5.4.6.2 The Combined License applicant will establish the properties of the foundation soils to be within the range considered for design of the nuclear island basemat.

Properties of Underlying Materials – A determination of the static and dynamic engineering properties of foundation soils and rocks in the site area will be addressed. This information will include a discussion of the type, quantity, extent, and purpose of field explorations, as well as logs of borings and test pits. Results of field plate load tests, field permeability tests, and other special field tests (e.g., bore-hole extensometer or pressuremeter tests) will also be provided. Results of geophysical surveys will be presented in tables and profiles. Data will be provided pertaining to site-specific soil layers (including their thicknesses, densities, moduli, and Poisson's ratios) between the basemat and the underlying rock stratum. Plot plans and profiles of site explorations will be provided.

Properties of Materials Adjacent to Nuclear Island Exterior Walls – A determination of the static and dynamic engineering properties of the surrounding soil will be made to demonstrate they are competent and provide passive earth pressures greater than or equal to those used in the seismic stability evaluation for sliding of the nuclear island. Seismic stability requirements are satisfied if the soil layers below and adjacent to the nuclear island foundation are composed predominantly of rock, or sand and rock (gravel), or sands that can be classified as medium to dense (standard penetration test having greater than 10 blows per foot). If the soil below and adjacent to the exterior walls is made up of clay, sand and clay, or other types of soil other than those classified above as competent, then the Combined License applicant will evaluate the seismic stability against sliding as described in subsection 3.8.5.5.3 using the site-specific soil properties.

Laboratory Investigations of Underlying Materials – Information about the number and type of laboratory tests and the location of samples used to investigate underlying materials will be provided. Discussion of the results of laboratory tests on disturbed and undisturbed soil and rock samples obtained from field investigations will be provided.

2.5.4.6.3 Excavation and Backfill – Information concerning the extent (horizontal and vertical) of seismic Category I excavations, fills, and slopes, if any will be addressed. The sources, quantities, and static and dynamic engineering properties of borrow materials will be described in the site-specific application. The compaction requirements, results of field compaction tests, and fill material properties (such as moisture content, density, permeability, compressibility, and gradation) will also be provided. Information will be provided concerning the specific soil retention system, for

NRC 207

Table 2-1 (Sheet 1 of 4~~3~~)

SITE PARAMETERS

Air Temperature	
Maximum Safety [(a)]	115°F dry bulb/80°F coincident wet bulb 85.5°F wet bulb (noncoincident)
Minimum Safety [(a)]	-40°F
Maximum Normal [(b)]	100°F dry bulb/80.1°F coincident wet bulb 80.1°F wet bulb (noncoincident) [(d)]
Minimum Normal [(b)]	-10°F
Wind Speed	
Operating Basis	145 mph (3 second gust); importance factor 1.15 (safety), 1.0 (nonsafety); exposure C; topographic factor 1.0
Tornado	300 mph
Seismic	
SSE	0.30g peak ground acceleration [(c)(f)]
Fault Displacement Potential	Negligible
Soil	
Average Allowable Static Bearing Capacity	Greater than or equal to 8,600 lb/ft^2 over the footprint of the nuclear island at its excavation depth
Maximum Allowable Dynamic Bearing Capacity for Normal Plus SSE	Greater than or equal to 35,000 lb/ft^2 at the edge of the nuclear island at its excavation depth
Shear Wave Velocity	Greater than or equal to 1,000 ft/sec based on low-strain best-estimate soil properties over the footprint of the nuclear island at its excavation depth

NRC 207

Table 2-1 (Sheet 2 of 4~~3~~)

SITE PARAMETERS

Lateral Variability	Soils supporting the nuclear island should not have extreme variations in subgrade stiffness. This may be demonstrated by one of the following: 1. Soils supporting the nuclear island are uniform in accordance with Regulatory Guide 1.132 if the geologic and stratigraphic features at depths less than 120 feet below grade can be correlated from one boring or sounding location to the next with relatively smooth variations in thicknesses or properties of the geologic units, or 2. Site specific assessment of subsurface conditions demonstrates that the bearing pressures below the nuclear island do not exceed 120% of those from the generic analyses of the nuclear island at a uniform site, or 3. Site specific analysis of the nuclear island basemat demonstrates that the site specific demand is within the capacity of the basemat. As an example of sites that are considered uniform, the variation of shear wave velocity in the material below the foundation to a depth of 120 feet below finished grade within the nuclear island footprint meets the criteria in the case outlined below: Case 1: For a layer with a low strain shear wave velocity greater than or equal to 2500 feet per second, the layer should have approximately uniform thickness, should have a dip not greater than 20 degrees, and should have less than 20 percent variation in the shear wave velocity from the average velocity in any layer. ~~Case 2: For a layer with a low strain shear wave velocity less than 2500 feet per second, the layer should have approximately uniform thickness, should have a dip not greater than 20 degrees, and should have less than 10 percent variation in the shear wave velocity from the average velocity in any layer (see subsection 2.5.4.5).~~
Liquefaction Potential	Negligible~~None~~
Minimum Soil Angle of Internal Friction	Greater than or equal to 35 degrees below footprint of nuclear island at its excavation depth

NRC 207

NRC 207

NRC 207

NRC 207

Table 2-1 (Sheet 3 of 4~~3~~)

SITE PARAMETERS

Missiles	
Tornado	4000 - lb automobile at 105 mph horizontal, 74 mph vertical 275 - lb, 8 in. shell at 105 mph horizontal, 74 mph vertical 1 inch diameter steel ball at 105 mph horizontal and vertical
Flood Level	Less than plant elevation 100′
Ground Water Level	Less than plant elevation 98′
Plant Grade Elevation	Less than plant elevation 100′ except for portion at a higher elevation adjacent to the annex building
Precipitation	
Rain	19.4 in./hr (6.3 in./5 min)
Snow/Ice	75 pounds per square foot on ground with exposure factor of 1.0 and importance factors of 1.2 (safety) and 1.0 (non-safety)
Atmospheric Dispersion Values - χ/Q[(e)]	
Site boundary (0-2 hr)	$\leq 1.0 \times 10^{-3}$ sec/m^3
Site boundary (annual average)	$\leq 2.0 \times 10^{-5}$ sec/m^3
Low population zone boundary	
0 - 8 hr	$\leq 5.0 \times 10^{-4}$ sec/m^3
8 - 24 hr	$\leq 3.0 \times 10^{-4}$ sec/m^3
24 - 96 hr	$\leq 1.5 \times 10^{-4}$ sec/m^3
96 - 720 hr	$\leq 8.0 \times 10^{-5}$ sec/m^3
Population Distribution	
Exclusion area (site)	0.5 mi

Notes:

(a) Maximum and minimum safety values are based on historical data and exclude peaks of less than 2 hours duration.

(b) Maximum and minimum normal values are the 1 percent exceedance magnitudes.

(c) With ground response spectra as given in Figures 3.7.1-1 and 3.7.1-2. Seismic input is defined at finished grade except for sites where the nuclear island is founded on hard rock.

(d) The noncoincident wet bulb temperature is applicable to the cooling tower only.

(e) For AP1000, the terms “site boundary” and “exclusion area boundary” are used interchangeably. Thus, the χ/Q specified for the site boundary applies whenever a discussion refers to the exclusion area boundary.

(f) Sites that fall within the hard rock high frequency GMRS given in Figure 3I.1-1 and Figure 3I.1-2 are acceptable.

NRC 207

Table 2-1 (Sheet 43 of 43)

SITE PARAMETERS

Control Room Atmospheric Dispersion Factors (χ /Q) for Accident Dose Analysis

χ/Q (s/m^3) at HVAC Intake for the Identified Release Points(1)

	Plant Vent or PCS Air Diffuser(3)	Ground Level Containment Release Points(4)	PORV and Safety Valve Releases(5)	Steam Line Break Releases	Fuel Handling Area(6)	Condenser Air Removal Stack(7)
0 - 2 hours	3.0E-3	6.0E-3	2.0E-2	2.4E-2	6.0E-3	6.0E-3
2 - 8 hours	2.5E-3	4.5E-3	1.8E-2	2.0E-2	4.0E-3	4.0E-3
8 - 24 hours	1.0E-3	2.0E-3	7.0E-3	7.5E-3	2.0E-3	2.0E-3
1 - 4 days	8.0E-4	1.8E-3	5.0E-3	5.5E-3	1.5E-3	1.5E-3
4 - 30 days	6.0E-4	1.5E-3	4.5E-3	5.0E-3	1.0E-3	1.0E-3

NRC 202

χ/Q (s/m^3) at Control Room Door for the Identified Release Points(2)

	Plant Vent or PCS Air Diffuser(3)	Ground Level Containment Release Points(4)	PORV and Safety Valve Releases(5)	Steam Line Break Releases	Fuel Handling Area(6)	Condenser Air Removal Stack(7)
0 - 2 hours	1.0E-3	1.0E-3	4.0E-3	4.0E-3	6.0E-3	2.0E-2
2 - 8 hours	7.5E-4	7.5E-4	3.2E-3	3.2E-3	4.0E-3	1.8E-2
8 - 24 hours	3.5E-4	3.5E-4	1.2E-3	1.2E-3	2.0E-3	7.0E-3
1 - 4 days	2.8E-4	2.8E-4	1.0E-3	1.0E-3	1.5E-3	5.0E-3
4 - 30 days	2.5E-4	2.5E-4	8.0E-4	8.0E-4	1.0E-3	4.5E-3

NRC 202

Notes:

1. These dispersion factors are to be used 1) for the time period preceding the isolation of the main control room and actuation of the emergency habitability system, 2) for the time after 72 hours when the compressed air supply in the emergency habitability system would be exhausted and outside air would be drawn into the main control room, and 3) for the determination of control room doses when the non-safety ventilation system is assumed to remain operable such that the emergency habitability system is not actuated.
2. These dispersion factors are to be used when the emergency habitability system is in operation and the only path for outside air to enter the main control room is that due to ingress/egress.
3. These dispersion factors are used for analysis of the doses due to a postulated small line break outside of containment. The plant vent and PCS air diffuser are potential release paths for other postulated events (loss-of-coolant accident, rod ejection accident, and fuel handling accident inside the containment); however, the values are bounded by the dispersion factors for ground level releases.

4. The listed values represent modeling the containment shell as a diffuse area source, and are used for evaluating the doses in the main control room for a loss-of-coolant accident, for the containment leakage of activity following a rod ejection accident, and for a fuel handling accident occurring inside the containment.
5. The listed values bound the dispersion factors for releases from the steam line safety & power-operated relief valves ~~and the condenser air removal stack~~. These dispersion factors would be used for evaluating the doses in the main control room for a steam generator tube rupture, a main steam line break, a locked reactor coolant pump rotor, and for the secondary side release from a rod ejection accident. ~~Additionally, these dispersion coefficients are conservative for the small line break outside containment.~~ NRC 202 NRC 202
6. The listed values bound the dispersion factors for releases from the fuel storage and handling area. The listed values also bound the dispersion factors for releases from the fuel storage area in the event that spent fuel boiling occurs and the fuel building relief panel opens on high temperature. These dispersion factors are used for the fuel handling accident occurring outside containment and for evaluating the impact of releases associated with spent fuel pool boiling.
7. This release point is included for information only as a potential activity release point. None of the design basis accident radiological consequences analyses model release from this point. NRC 202

Table 6.2.2-1

PASSIVE CONTAINMENT COOLING SYSTEM PERFORMANCE PARAMETERS

PCCWST useable capacity for PCS (gal) - Minimum	756,700
PCCWST useable capacity for FPS(2) (gal) - Minimum	18,000
Flow duration from PCCWST (days) - Minimum	3
PCCWST minimum temperature (°F)	40
PCCWST maximum temperature (°F)	120
Upper annulus drain rate (per drain) - Minimum	525 gpm
PCCAWST(4) long-term makeup rate to containment - Minimum	100 gpm
PCCAWST long-term makeup to spent fuel pool – Minimum	35 gpm
PCCAWST long-term makeup duration - Minimum	4 days
PCCWST long-term makeup to spent fuel pool – Minimum	118 gpm

PCCWST Water Elevation (Note 3) (feet)	Nominal Design Flow (gpm)	Minimum Design Flow (gpm)	Safety Analysis Flow (gpm)	Wetted Coverage (Note 3) (% of circumference)
27.5	494.6 (Note 5)	471.1	469.1	90
24.1	247.1	238.4	226.6	90
20.3	190.8	184.0	176.3	72.9
16.8	157.1	151.4	144.2	59.6
4.0 (Note 6)	113.1	109.6		
			100.7 @ 72 hours	41.6

Notes:

1. PCCWST = passive containment cooling water storage tank
2. FPS = fire protection system
3. PCCWST Water Elevation corresponds to the nominal standpipe elevations in feet above the tank floor (Reference Plant Elevation 29~~8~~′-9″, see Figure 3.8.4-2). Wetted coverage is measured as the linear percentage of the containment shell circumference wetted measured at the upper spring line for the safety analysis flow rate conditions. NRC 211
4. PCCAWST = passive containment cooling ancillary water storage tank
5. The initial nominal design flow is based on the nominal PCCWST water elevation.
6. This elevation is the calculated water level at 72 hours after initiation of PCS flow, based on the minimum design flow rates.

Table 6.2.2-2

COMPONENT DATA
PASSIVE CONTAINMENT COOLING SYSTEM
(NOMINAL)

Passive Containment Cooling Water Storage Tank	
Volume (gal) - Minimum	756,700
Design temperature (°F)	125
Design pressure (psig)	Atmospheric
Material	Concrete with stainless steel liner
Standpipe Elevations Above Bottom of Tank Floor (Plant Elevation 2938′-9″)	
Overflow (ft) – Nominal	28.5
Top standpipe (ft) - Nominal	24.1
Second standpipe (ft) - Nominal	20.3
Third standpipe (ft) - Nominal	16.8
Bottom standpipe (ft)	0.5
Passive Containment Ancillary Cooling Water Storage Tank	
Volume (gal) - Nominal	780,000
Design temperature (°F)	125
Design pressure (psig)	Atmospheric
Material	Carbon steel
Water Distribution Bucket	
Volume (gal) - Nominal	42
Design temperature (°F)	150
Design pressure (psig)	Atmospheric
Material	Stainless steel
Water Distribution Collection Troughs and Weirs	
Design temperature (°F)	N/A
Design pressure (psig)	Atmospheric
Material	Stainless steel
Passive Containment Cooling Recirculation Pump	
Quantity	2
Type	Centrifugal
Design capacity (gpm)	135
Design total differential head (ft)	375

NRC 211

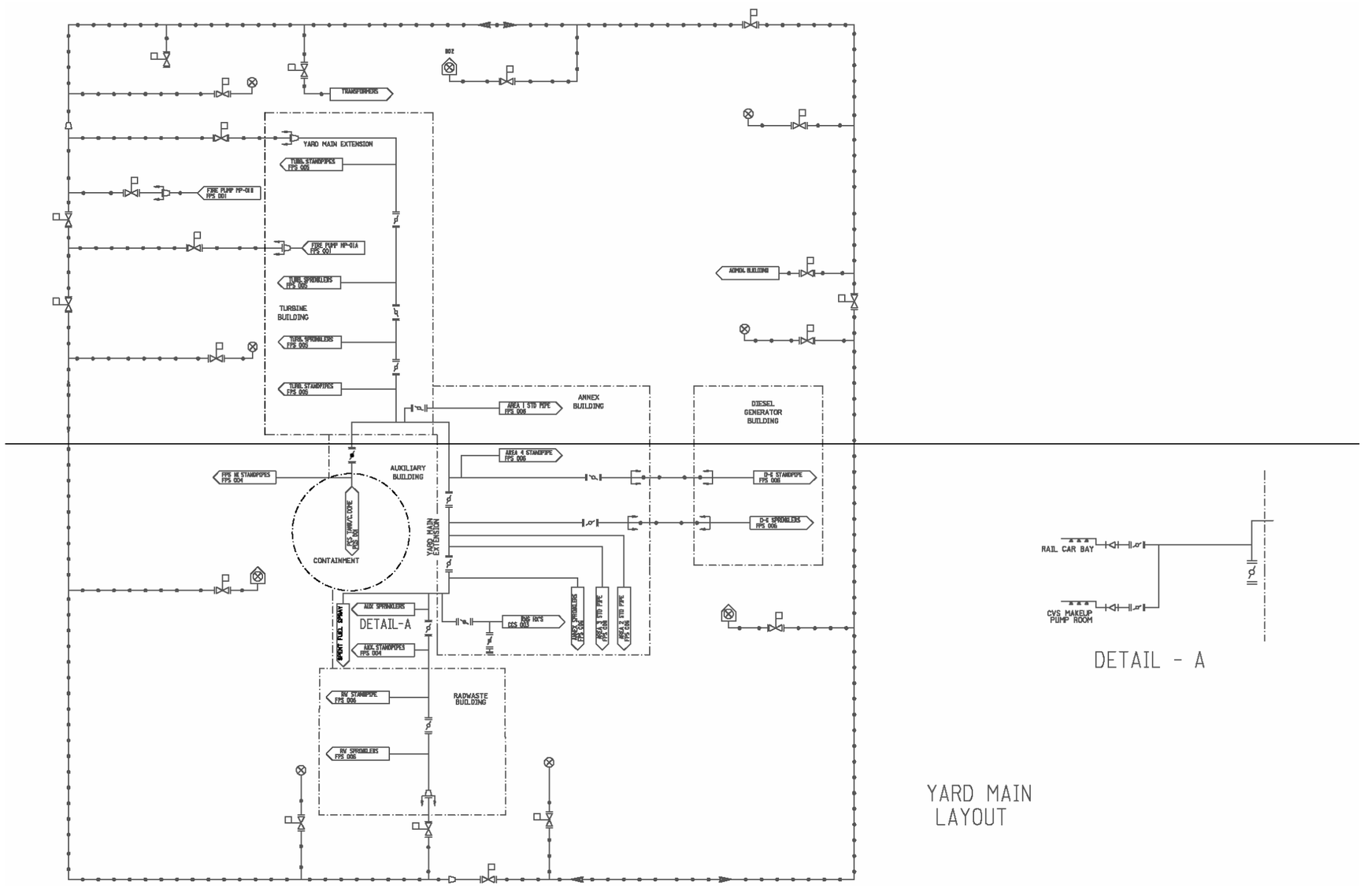
TRANSFORMERS
YARD MAIN EXTENSION
TURB. STANDPIPES FPS 009
FIRE PUMP FP-01B FPS 001
FIRE PUMP FP-01A FPS 001
TURB. SPRINKLERS FPS 005
TURBINE BUILDING
TURB. SPRINKLERS FPS 005
TURB. STANDPIPES FPS 009
ADMIN. BUILDING
ANNEX BUILDING
AREA 1 STD PIPE FPS 008
DIESEL GENERATOR BUILDING
AREA 4 STANDPIPE FPS 008
AUXILIARY BUILDING
FPS NE STANDPIPES FPS 004
D-E STANDPIPE FPS 008
D-E SPRINKLERS FPS 005
FCS VRMC/C.CORE FCS 004
CONTAINMENT
YARD MAIN EXTENSION
AUX SPRINKLERS
DETAIL-A
EMERG FUEL SPRAY
AUX STANDPIPES FPS 004
ENG RC'S FCS 003
AREA 3 SPRINKLERS FPS 008
AREA 3 STD PIPE FPS 008
AREA 2 STD PIPE FPS 008
RV STANDPIPE FPS 006
RADWASTE BUILDING
RV SPRINKLERS FPS 006
RAIL CAR BAY
CVS MAKEUP PUMP ROOM
DETAIL - A
YARD MAIN LAYOUT

NRC 208

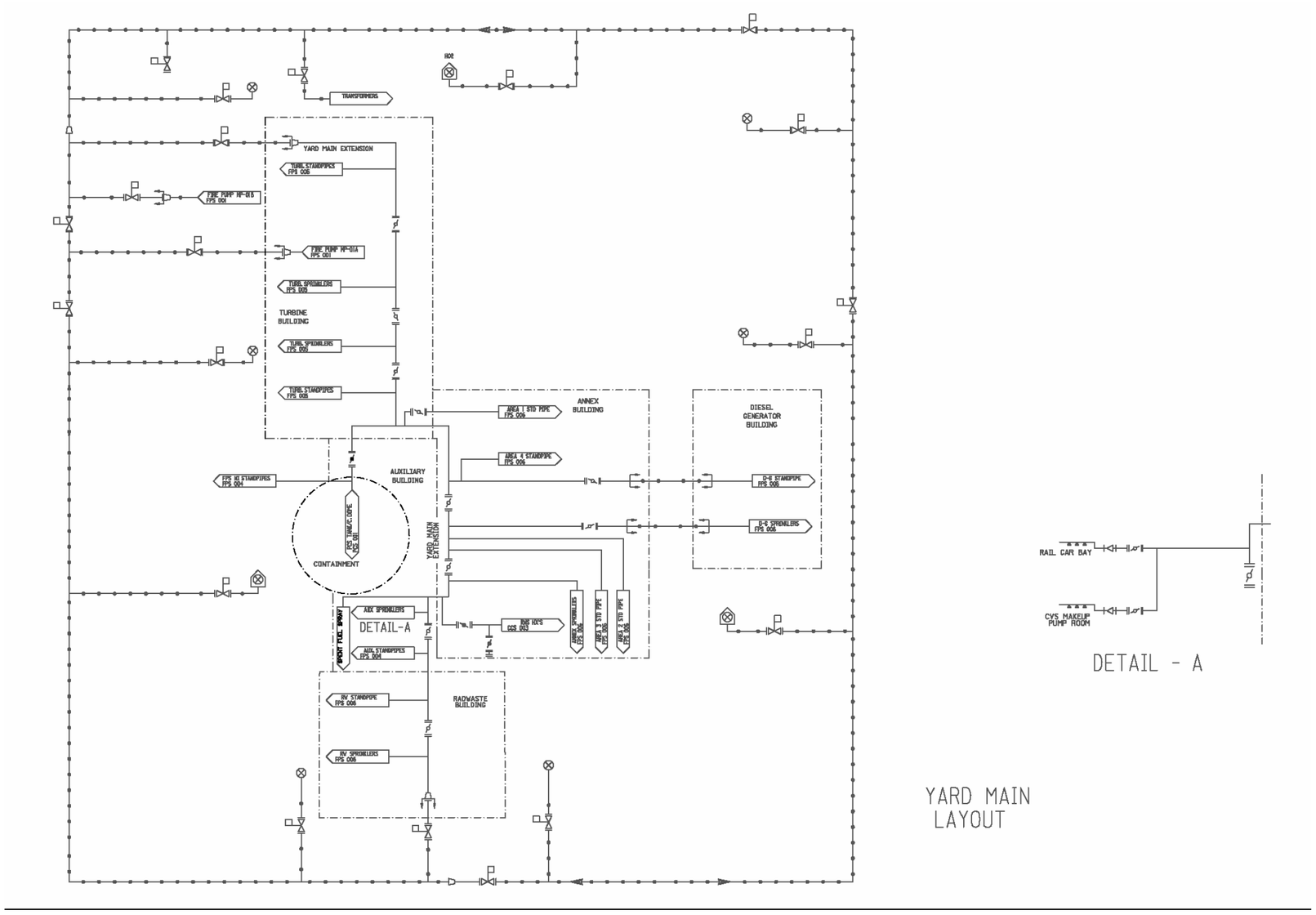

Figure 9.5.1-1 (Sheet 2 of 3)

Fire Protection System
Piping and Instrumentation Diagram
(REF) FPS 002, 004

boundary dose rates have been evaluated based upon the quantity of activated carbon in a delay bed being at least 80 cubic feet. An inspection of the gaseous radwaste system activated carbon delay beds, WGS-MV01A and WGS-MV02B, will confirm that the contained volume of each delay bed is at least 80 cubic feet.

11.3.5 Combined License Information

11.3.5.1 Cost Benefit Analysis of Population Doses

The analysis performed to determine offsite dose due to gaseous effluents is based upon the AP1000 generic site parameters included in Chapter 1 and Tables 11.3-1, 11.3-2 and 11.3-4. The Combined License applicant will provide a site specific cost-benefit analysis to demonstrate compliance with 10 CFR 50, Appendix I, regarding population doses due to gaseous effluents.

11.3.5.2 Identification of Adsorbent Media

The Combined License information requested in this subsection has been fully addressed in APP-GW-GLR-008 (Reference 5), and the applicable changes are incorporated into the DCD. No additional work is required by the Combined License applicant to address the Combined License information requested in this subsection.

The following words represent the original Combined License Information Item commitment, which has been addressed as discussed above:

> The Combined License applicant will identify the types of adsorbent media to be used in the gaseous radwaste system.

11.3.6 References

1. "Annual Limits on Intake (ALIs) and Derived Air Concentrations (DACs) of Radionuclides for Occupational Exposure; Effluent Concentrations; Concentrations for Release to Sewerage," 10 CFR Part 20, Appendix B, Issued by 58 FR 67657, April 28, 1995.

2. "Numerical Guides for Design Objectives and Limiting Conditions for Operation to Meet the Criterion 'As-Low-As-Is-Reasonably-Achievable' for Radioactive Material in Light-Water-Cooled Nuclear Power Reactor Effluents," 10 CFR Part 50, Appendix I.

3. "Calculation of Releases of Radioactive Materials in Gaseous and Liquid Effluents from Pressurized Water Reactors (PWR-GALE Code)," NUREG-0017, Revision 1, March 1985.

4. "Minimization of Contamination," 10 CFR 20.1406.

NRC 212

5. APP-GW-GLR~~N~~-008, "Request for Closure of COL Items in DCD Chapter 11, Identification for Adsorbent Media~~Identification of Ion Exchange and Absorbent Media, Completing COL Items 11. 2-3 and 11. 3-2~~," Westinghouse Electric Company LLC.

Table 15A-6

CONTROL ROOM ATMOSPHERIC DISPERSION FACTORS (χ/Q) FOR ACCIDENT DOSE ANALYSIS

	χ/Q (s/m³) at HVAC Intake for the Identified Release Points(1)					
	Plant Vent or PCS Air Diffuser(3)	**Ground Level Containment Release Points(4)**	**PORV and Safety Valve Releases(5)**	**Steam Line Break Releases**	**Fuel Handling Area(6)**	**Condenser Air Removal Stack(7)**
0 – 2 hours	3.0E-3	6.0E-3	2.0E-2	2.4E-2	6.0E-3	6.0E-3
2 – 8 hours	2.5E-3	4.5E-3	1.8E-2	2.0E-2	4.0E-3	4.0E-3
8 – 24 hours	1.0E-3	2.0E-3	7.0E-3	7.5E-3	2.0E-3	2.0E-3
1 – 4 days	8.0E-4	1.8E-3	5.0E-3	5.5E-3	1.5E-3	1.5E-3
4 – 30 days	6.0E-4	1.5E-3	4.5E-3	5.0E-3	1.0E-3	1.0E-3
	χ/Q (s/m³) at Control Room Door for the Identified Release Points(2)					
	Plant Vent or PCS Air Diffuser(3)	**Ground Level Containment Release Points(4)**	**PORV and Safety Valve Releases(5)**	**Steam Line Break Releases**	**Fuel Handling Area(6)**	**Condenser Air Removal Stack(7)**
0 – 2 hours	1.0E-3	1.0E-3	4.0E-3	4.0E-3	6.0E-3	2.0E-2
2 – 8 hours	7.5E-4	7.5E-4	3.2E-3	3.2E-3	4.0E-3	1.8E-2
8 – 24 hours	3.5E-4	3.5E-4	1.2E-3	1.2E-3	2.0E-3	7.0E-3
1 – 4 days	2.8E-4	2.8E-4	1.0E-3	1.0E-3	1.5E-3	5.0E-3
4 – 30 days	2.5E-4	2.5E-4	8.0E-4	8.0E-4	1.0E-3	4.5E-3

NRC 203

NRC 203

Notes:

1. These dispersion factors are to be used 1) for the time period preceding the isolation of the main control room and actuation of the emergency habitability system, 2) for the time after 72 hours when the compressed air supply in the emergency habitability system would be exhausted and outside air would be drawn into the main control room, and 3) for the determination of control room doses when the non-safety ventilation system is assumed to remain operable such that the emergency habitability system is not actuated.
2. These dispersion factors are to be used when the emergency habitability system is in operation and the only path for outside air to enter the main control room is that due to ingress/egress.
3. These dispersion factors are used for analysis of the doses due to a postulated small line break outside of containment. The plant vent and PCS air diffuser are potential release paths for other postulated events (loss-of-coolant accident, rod ejection accident, and fuel handling accident inside the containment); however, the values are bounded by the dispersion factors for ground level releases.
4. The listed values represent modeling the containment shell as a diffuse area source, and are used for evaluating the doses in the main control room for a loss-of-coolant accident, for the containment leakage of activity following a rod ejection accident, and for a fuel handling accident occurring inside the containment.

NRC 203

5. The listed values bound the dispersion factors for releases from the steam line safety & power-operated relief valves ~~and the condenser air removal stack~~. These dispersion factors would be used for evaluating the doses in the main control room for a steam generator tube rupture, a main steam line break, a locked reactor coolant pump rotor, and for the secondary side release from a rod ejection accident. ~~Additionally, these dispersion coefficients are conservative for the small line break outside containment.~~

NRC 203

6. The listed values bound the dispersion factors for releases from the fuel storage and handling area. The listed values also bound the dispersion factors for releases from the fuel storage area in the event that spent fuel boiling occurs and the fuel building relief panel opens on high temperature. These dispersion factors are used for the fuel handling accident occurring outside containment and for evaluating the impact of releases associated with spent fuel pool boiling.

NRC 203

7. This release point is included for information only as a potential activity release point. None of the design basis accident radiological consequences analyses model release from this point.

Table 15A-7

CONTROL ROOM SOURCE/RECEPTOR DATA FOR DETERMINATION OF ATMOSPHERIC DISPERSION FACTORS

Source Description	Release Elevation Note 1 (m)	Horizontal Straight-Line Distance To Receptor		
		Control Room HVAC Intake (Elevation 19.9 m) (Δ1)	Annex Building Access (Elevation 1.5 m) (Δ2)	Comment
Plant Vent (⬡1)	55.7	147.2 ft (44.9 m)	379.3 ft (115.6 m)	
PCS Air Diffuser (⬡2)	69.8	118.1 ft (36.0 m)	343.2 ft (104.6 m)	
Fuel Building Blowout Panel (⬡3)	17.4	203.2 ft (61.9 m)	427.4 ft (130.3 m)	Note 3
NRC 200 Fuel Building Rail Bay Door (⬡4)	1.5	218.5 ft (66.6 m)	433.5 ft (132.1 m)	Note 3
Steam Vent (⬡5)	17.1	61.5 ft (18.8 m)	261.6 ft (79.7 m)	
PORV/Safety Valves (⬡6)	19.2	66.9 ft (20.4 m)	255.4 ft (77.8 m)	
Condenser Air Removal Stack (⬡7)	38.4	198.3 ft (60.4 m)	58.3 ft (17.8 m)	Note 3
Containment Shell (Diffuse Area Source) (⬡8)	Same as Receptor Elevation (19.9 m or 1.5 m)	42.0 ft (12.8 m)	272.3 ft (83.0 m)	Note 2

Notes:

1. All elevations relative to grade at 0.0 m.
2. For calculating distance, the source is defined as the point on the containment shell closest to receptor.
3. Vertical distance traveled is conservatively neglected.
4. ⬡ – Refer to Symbols on Figure 15A-1.
5. Δ – Refer to Symbols on Figure 15A-1.

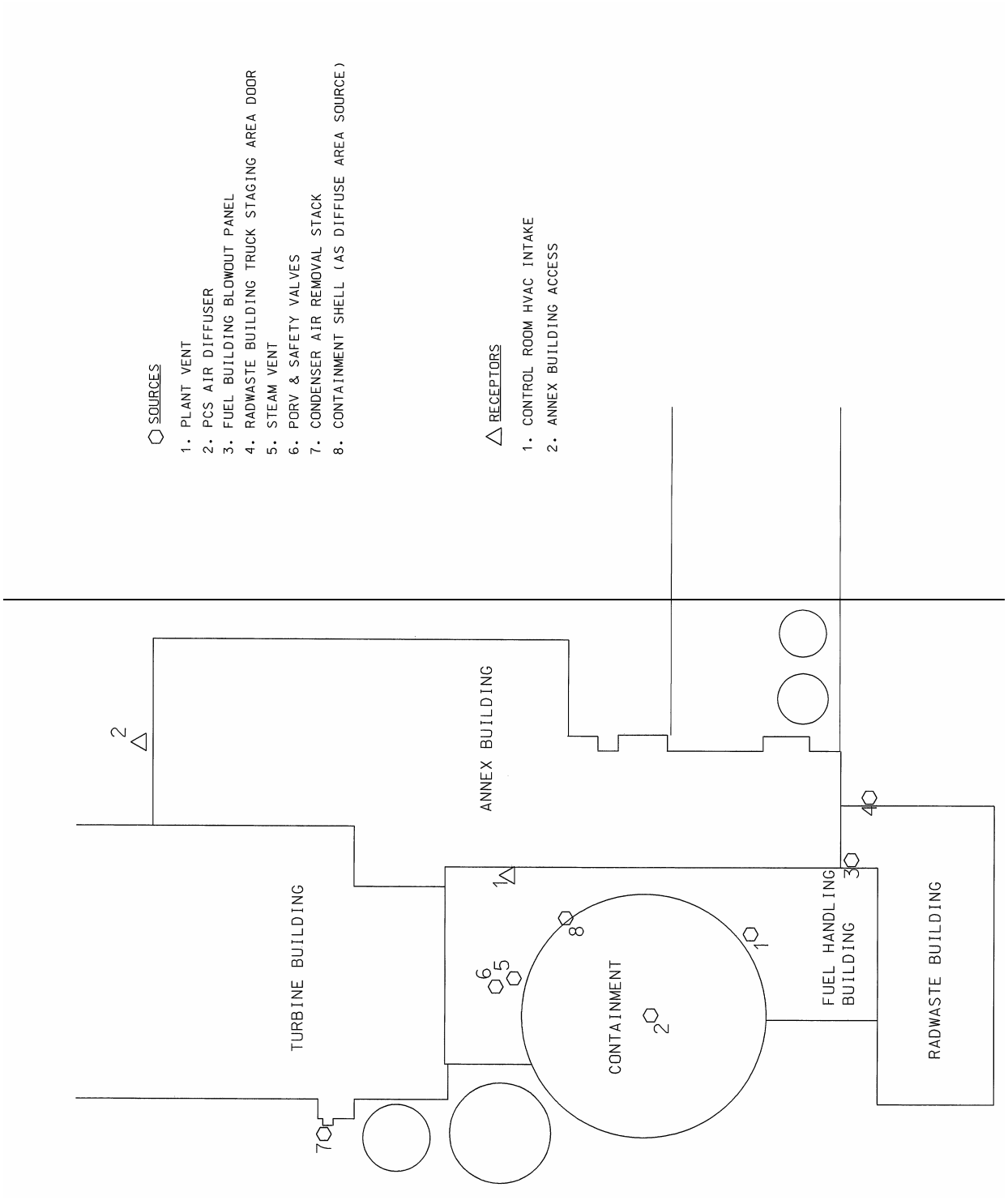
SOURCES
1. PLANT VENT
2. PCS AIR DIFFUSER
3. FUEL BUILDING BLOWOUT PANEL
4. RADWASTE BUILDING TRUCK STAGING AREA DOOR
5. STEAM VENT
6. PORV & SAFETY VALVES
7. CONDENSER AIR REMOVAL STACK
8. CONTAINMENT SHELL (AS DIFFUSE AREA SOURCE)
RECEPTORS
1. CONTROL ROOM HVAC INTAKE
2. ANNEX BUILDING ACCESS
TURBINE BUILDING
ANNEX BUILDING
CONTAINMENT
FUEL HANDLING BUILDING
RADWASTE BUILDING

NRC 189

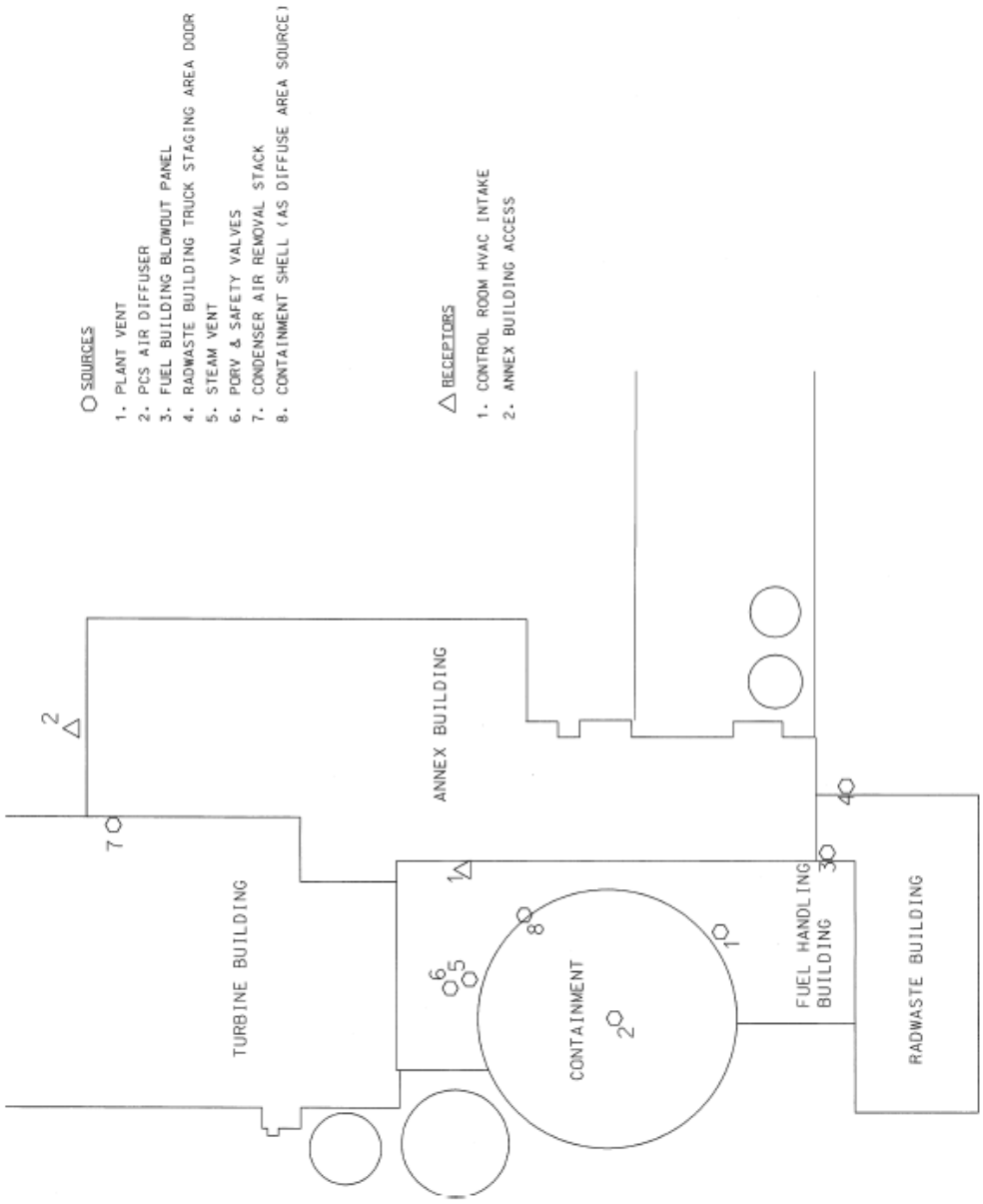

Figure 15A-1

Site Plan with Release and Intake Locations

2.0 SAFETY LIMITS (SLs)

2.1 SLs

2.1.1 Reactor Core SLs

In MODES 1 and 2, the combination of THERMAL POWER, Reactor Coolant System (RCS) highest loop cold leg temperature, and pressurizer pressure shall not exceed the limits specified in the COLR; and the following SLs shall not be exceeded:

2.1.1.1 The departure from nucleate boiling ratio (DNBR) shall be maintained ≥ 1.14 for the WRB-2M DNB correlation~~s~~.

NRC 213

2.1.1.2 The peak fuel centerline temperature shall be maintained < 5080°F, decreasing by 58°F per 10,000 MWD/MTU of burnup.

2.1.2 RCS Pressure SL

In MODES 1, 2, 3, 4, and 5 the RCS pressure shall be maintained ≤ 2733.5 psig.

2.2 SL Violations

2.2.1 If SL 2.1.1 is violated, restore compliance and be in MODE 3 within 1 hour.

2.2.2 If SL 2.1.2 is violated:

2.2.2.1 In MODE 1 or 2, restore compliance and be in MODE 3 within 1 hour.

2.2.2.2 In MODE 3, 4, or 5, restore compliance within 5 minutes.

3.8 ELECTRICAL POWER SYSTEMS

3.8.1 DC Sources – Operating

LCO 3.8.1 The Division A, B, C, and D Class 1E DC power subsystems shall be OPERABLE.

APPLICABILITY: MODES 1, 2, 3, and 4.

ACTIONS

CONDITION	REQUIRED ACTION	COMPLETION TIME
A. One or more battery chargers in one division inoperable.	A.1 Restore battery terminal voltage to greater than or equal to the minimum established float voltage.	6 hours
	AND	
	A.2 Verify battery float current ≤ [5] amps.	Once per 24 hours
	AND	
	A.3 Restore battery charger(s) to OPERABLE status.	7 days
B. One or more battery chargers in two divisions inoperable.	B.1 Restore battery terminal voltage to greater than or equal to the minimum established float voltage.	2 hours
	AND	
	B.2 Verify battery float current ≤ [5] amps.	Once per 24 hours
	AND	
NRC 214	B.3 Restore battery charger(s) to OPERABLE status.	7 days

5.2 Organization

5.2.2 Unit Staff (continued)

The unit staff organization shall include the following:

a. A non-licensed operator shall be assigned to each reactor containing fuel and an additional non-licensed operator shall be assigned for each control room from which a reactor is operating in MODE 1, 2, 3, or 4.

NRC 204

b. Shift crew composition may be less than the minimum requirement of 10 CFR 50.54(m)(2)(i) and 5.2.2.a and 5.2.2.~~f~~g for a period of time not to exceed 2 hours in order to accommodate unexpected absence of on-duty shift crew members provided immediate action is taken to restore the shift crew composition to within the minimum requirements.

c. A radiation protection technician shall be on site when fuel is in the reactor. The position may be vacant for not more than 2 hours, in order to provide for unexpected absence, provided immediate action is taken to fill the required position.

d. Administrative procedures shall be developed and implemented to limit the working hours of unit staff who perform safety related functions (e.g., licensed Senior Reactor Operators (SROs), licensed Reactor Operators (ROs), health physicists, auxiliary operators, and key maintenance personnel).

   The controls shall include guidelines on working hours that ensure adequate shift coverage shall be maintained without routine heavy use of overtime.

   Any deviation from the above guidelines shall be authorized in advance by the plant manager or the plant manager's designee, in accordance with approved administrative procedures, and with documentation of the basis for granting the deviation. Routine deviation from the working hour guidelines shall not be authorized.

   Controls shall be included in the procedures to require a periodic independent review be conducted to ensure that excessive hours have not be assigned.

e. The operations manager or assistant operations manager shall hold an SRO license.

f. An individual shall provide advisory technical support to the unit operations shift crew in the areas of thermal hydraulics, reactor engineering, and plant analysis with regard to the safe operation of the unit. This individual shall meet the qualifications specified by the Commission Policy Statement on Engineering Expertise on Shift.

Table 19.59-18 (Sheet 24 of 24)

AP1000 PRA-BASED INSIGHTS

Insight	Disposition
73. A cleanliness program controls foreign debris from being introduced into the IRWST tank and into the containment during maintenance and inspection operations.	6.3.2.2.7.2, 6.3.2.2.7.3, & 6.3.8.1
74. For floor drains, from the reactor cavity PXS-A and PXS-B rooms, appropriate precautions such as check valves, back flow preventers, and siphon breaks are assumed to prevent back flow from a flooded space to a nonflooded space.	3.4.1.2.2
75. Plant ventilation systems include features to prevent smoke originating from one fire area to another to the extent that they could adversely affect safe shutdown capabilities.	9.4.2.2
76. An alternative gravity injection path is provided through RNS V-023 during cold shutdown and refueling conditions with the RCS open. Administrative controls to maximize the likelihood that RNS valve V-023 will be able to open if needed during Mode 5 when the RCS is open, and PRHR cannot be used for core cooling are established.	Emergency Response Guidelines 13.5
77. The IRWST suction isolation valve (V023) and the RCS pressure boundary isolation valves (V001A/B, V002A/B) are environmentally qualified to perform their safety functions.	Tier 1 Information
78. Following an extended loss of RNS during safe/cold shutdown with the RCS intact and PRHR unavailable, it is essential to establish and maintain venting capability with ADS Stage 4 for gravity injection and containment recirculation.	19.59.5
79. Generic open items and plant-specific action items resulting from NRC review of the I&C platform are resolved~~resowed~~.	7.1.6
80. An analysis is provided that demonstrates that operator actions, which minimize the probability of the potential for spurious ADS actuation as a result of a fire, can be accomplished within 30 minutes following detection of the fire and the procedure for the manual actuation of the valve to allow fire water to reach the automatic fire system in the containment maintenance floor.	9.5.1.8
81. Procedures to minimize risk when fire areas are breached during maintenance are established. These procedures will address a fire watch for fire areas breached during maintenance.	9.5.1.8
82. It is important to maintain the low-temperature overpressure protection provided by the RNS relief valve to ensure that the reactor vessel pressure and temperature limits are not exceeded during shutdown conditions. Isolation of the RNS and its relief valve is permitted during shutdown conditions in case the hot legs empty due to a loss of RCS inventory; if the RNS is isolated, an alternate vent path would be opened, such as the ADS Stage 1, 2, and 3 valves.	16.1 (LCO Basis 3.4.14)

NRC 210

APP-GW-GLR-134

Revision 5

Attachment A

Introduction and Tier 1

APP-GW-GLR-134
Revision 5

Attachment A

AP1000 DCD Impact Report

APP-GW-GL-700, Revision 16, "AP1000 Design Control Document"

DCD Section	*Westinghouse Status*	*Tracking Number*	*DCD Category*	*Change Criteria*
Introduction, Tier 1 - Table 1-1, Tier 2 - Table 1.8-2 (Sheet 4 of 13), Section 3.10.2, 3.10.6, 3.10.7, 3D.6, 3D.7	**Accepted for Revision 17 of the DCD and Revision 5 of TR 134**	**NRC261 (Introduction)**	**Intro**	**NRC Prior Approval Not Required**

Description:

NRC261 contains changes to Table 1-1, Table 1.8-2 (Sheet 4-13), Section 3.10.2, 3.10.6, 3.10.7, 3D.6, 3D.7 to be consistent with APP-GW-GLN-006, Rev 4

Reference Information:

APP-GW-GLN-006, Rev 4
(TR062)

Attachment A

AP1000 DCD Impact Report

APP-GW-GL-700, Revision 16, "AP1000 Design Control Document"

DCD Section	*Westinghouse Status*	*Tracking Number*	*DCD Category*	*Change Criteria*
Table 2.2.3-4, Figure 2.2.3-1 (Sheet 2 of 2) Figure 3.3-5	**Accepted for Revision 17 of the DCD and Revision 5 of TR 134**	**NRC249**	**Tier 1**	**Requires Prior NRC Approval**

Description:

NRC249 contains changes to Table 2.2.3-4 Section 8c i, viii, xiii and xiv and Figure 2.2.3-1 (Sheet 2 of 2) and Figure 3.3-5 to be consistent with APP-GW-GLE-002, Rev 1.

Reference Information:

APP-GW-GLE-002, Rev 1

DCD Section	*Westinghouse Status*	*Tracking Number*	*DCD Category*	*Change Criteria*
Tier 1, Table 5.0-1	**Accepted for Revision 17 of the DCD and Revision 5 of TR 134**	**NRC265**	**Tier 1**	**Requires Prior NRC Approval**

Description:

NRC265 contains changes to Table 5.0-1 to be consistent with APP-GW-GLE-012, Rev 0

Reference Information:

APP-GW-GLE-012, Rev 0

Attachment A

AP1000 DCD Impact Report

APP-GW-GL-700, Revision 16, "AP1000 Design Control Document"

DCD Section	*Westinghouse Status*	*Tracking Number*	*DCD Category*	*Change Criteria*
Tier 1,Table 5.0-1	**Accepted for Revision 17 of the DCD and Revision 5 of TR 134**	**NRC263**	**Tier 1**	**Requires Prior NRC Approval**

Description:

NRC263 contains changes to Table 5.0-1 to be consistent with APP-GW-GLE-036, Rev 0

Reference Information:

APP-GW-GLE-036, Rev 0

DCD Section	*Westinghouse Status*	*Tracking Number*	*DCD Category*	*Change Criteria*
Tier 1, Table 5.0-1	**Accepted for Revision 17 of the DCD and Revision 5 of TR 134**	**NRC223**	**Tier 1**	**Requires Prior NRC Approval**

Description:

NRC 223 contains changes to Tier 1, Table 5.0-1 to be consistent with RAI-TR85-SEB1-32, Rev 0

Reference Information:

RAI-TR85-SEB1-32, Rev 0

Attachment A

Tier 2

APP-GW-GLR-134
Revision 5

Attachment A

AP1000 DCD Impact Report

APP-GW-GL-700, Revision 16, "AP1000 Design Control Document"

DCD Section	*Westinghouse Status*	*Tracking Number*	*DCD Category*	*Change Criteria*
Tier 2 TOC, Section 19.58.2.4, Appendix 19F, Chapter 19 TOC	**Accepted for Revision 17 of the DCD and Revision 5 of TR 134**	**NRC248**	**Tier 2**	**NRC Prior Approval Not Required**

Description:

NRC248 contains the addition of Section 19.58.2.4, Chapter 19 TOC, Tier 2 TOC and Appendix 19F to be consistent with APP-GW-GLR-126, Rev 0. The numerical sequencing was revised from 19.58.2.3.4 to 19.58.2.4 due to an inconsistency in TR126.

Reference Information:

APP-GW-GLR-126, Rev 0

AP1000 DCD Impact Report

APP-GW-GL-700, Revision 16, "AP1000 Design Control Document"

DCD Section	*Westinghouse Status*	*Tracking Number*	*DCD Category*	*Change Criteria*
Figure 1.2-6, Sections 6.1.1.4, 6.3.2.2.7, 6.3.9, Table 6.3-2 (sht 2 of 2), Table 14.3-2 (sht 3 of 17), Figures 6.3-2 (sht 2), 6.3-6, 6.3-8, 6.3-9, 9A-1 (sht 4 of 16), 12.3-1 (sht 5 of 16), 12.3-2 (sht 5 of 15) and 12.3-3 (sht 5 of 16)	**Accepted for Revision 17 of the DCD and Revision 5 of TR 134**	**NRC250**	**Tier 2**	**NRC Prior Approval Not Required**

Description:

NRC250 contains changes to Figure 1.2-6, Sections 6.1.1.4, 6.3.2.2.7.1, 6.3.2.2.7.2, 6.3.2.2.7.3 and 6.3.9, Table 6.3-2 (Sheet 2 of 2), Table 14.3-2 (Sheet 3 of 17), Figures 6.3-2 (Sheet 2), 6.3-6, 6.3-8, 6.3-9, 9A-1 (Sheet 4 of 16), 12.3-1 (Sheet 5 of 16), 12.3-2 (Sheet 5 of 15) and 12.3-3 (Sheet 5 of 16) to be consistent with APP-GW-GLE-002, Rev 1

Reference Information:

APP-GW-GLE-002, Rev 1

AP1000 DCD Impact Report

APP-GW-GL-700, Revision 16, "AP1000 Design Control Document"

DCD Section	Westinghouse Status	Tracking Number	DCD Category	Change Criteria
Figure 1.2-18 Sections 12.5.2.2, 13.3,18.8.3.6,	**Accepted for Revision 17 of the DCD and Revision 5 of TR 134**	**NRC245**	**Tier 2**	**NRC Prior Approval Not Required**

Description:

NRC245 contains editorial changes to Figure 1.2-18 and Sections 12.5.2.2, 13.3 and 18.8.3.6 from operational support center to operations support center

Reference Information:

DCD Section	Westinghouse Status	Tracking Number	DCD Category	Change Criteria
Table 1.3-1 (sheet 2 of 6), Appendix 1A (reg guide 1.14), 5.1.3.3, 5.4.1.2.1, 5.4.1.3	**Accepted for Revision 17 of the DCD and Revision 5 of TR 134**	**NRC216**	**Tier 2**	**NRC Prior Approval Not Required**

Description:

NRC216 contains changes to Table 1.3-1 (Sheet 2 of 6), Appendix 1A (Reg guide 1.14), Sections 5.1.3.3, 5.4.1.2.1 and 5.4.1.3 to be consistent with RAI-SRP5.4.1-CIB1-01, Rev 0

Reference Information:

RAI-SRP5.4.1-CIB1-01, Rev 0

AP1000 DCD Impact Report

APP-GW-GL-700, Revision 16, "AP1000 Design Control Document"

DCD Section	*Westinghouse Status*	*Tracking Number*	*DCD Category*	*Change Criteria*
Table 1.6-1 (sheet 12 of 20)	**Accepted for Revision 17 of the DCD and Revision 5 of TR 134**	**NRC238**	**Tier 2**	**NRC Prior Approval Not Required**

Description:

NRC238 contains an editorial change in the references for Table 1.6-1 (sheet 12 of 20) Section 7.1 to be consistent with these references in DCD Rev 16

Reference Information:

Attachment A

AP1000 DCD Impact Report

APP-GW-GL-700, Revision 16, "AP1000 Design Control Document"

DCD Section	*Westinghouse Status*	*Tracking Number*	*DCD Category*	*Change Criteria*
Tier 1 - Table 1-1, Tier 2 - Table 1.8-2 (sheet 4 of 13), Section 3.10.2, 3.10.6, 3.10.7, 3D.6, 3D.7, APP 3D - Attachment A - Section 5.0, APP 3D - Attachment E - Sections E.4.2, E.4.3 and E.7	**Accepted for Revision 17 of the DCD and Revision 5 of TR 134**	**NRC261 (Tier 2)**	**Tier 2**	**NRC Prior Approval Not Required**

Description:

NRC261 contains changes to Table 1-1, Table 1.8-2 (Sheet 4-13), Section 3.10.2, 3.10.6, 3.10.7, 3D.6, 3D.7, Appendix 3D Attachment A - Section 5.0, Appendix 3D Attachment E - Sections E.4.2, E.4.3 and E.7 to be consistent with APP-GW-GLN-006, Rev 4

Reference Information:

APP-GW-GLN-006, Rev 4 (TR062)

AP1000 DCD Impact Report

APP-GW-GL-700, Revision 16, "AP1000 Design Control Document"

DCD Section	Westinghouse Status	Tracking Number	DCD Category	Change Criteria
Table 1.8-2 (Sheet 11 of 13), Sections 7.1.7 and 13.6.1	**Accepted for Revision 17 of the DCD and Revision 5 of TR 134**	**NRC268**	**Tier 2**	**NRC Prior Approval Not Required**

Description:

NRC268 contains changes Table 1.8-2 (Sheet 11 of 13), Sections 7.1.7 and 13.6.1 to be consistent with APP-GW-GLR-104, Rev 1

Reference Information:

APP-GW-GLR-104, Rev 1

DCD Section	Westinghouse Status	Tracking Number	DCD Category	Change Criteria
Table 1.9-1 (Sheet 3 of 15)	**Accepted for Revision 17 of the DCD and Revision 5 of TR 134**	**NRC247**	**Tier 2**	**NRC Prior Approval Not Required**

Description:

NRC247 contains changes to Table 1.9-1 (sheet 3 of 15) to be consistent with section 3D.6.4 and Appendix 1A - Reg Guide 1.33

Reference Information:

AP1000 DCD Impact Report

APP-GW-GL-700, Revision 16, "AP1000 Design Control Document"

DCD Section	Westinghouse Status	Tracking Number	DCD Category	Change Criteria
Chapter 2 TOC, Sections 2.5.4.3, 2.5.4.6.11 and Table 2.5-1	**Accepted for Revision 17 of the DCD and Revision 5 of TR 134**	**NRC226**	**Tier 2**	**NRC Prior Approval Not Required**

Description:

NRC226 contains changes to Chapter 2 TOC, Sections 2.5.4.3, 2.5.4.6.11 and Table 2.5-1 to be consistent with RAI-TR85-SEB1-36, Rev 0

Reference Information:

RAI-TR85-SEB1-36, Rev 0

DCD Section	Westinghouse Status	Tracking Number	DCD Category	Change Criteria
Section 2.5.2, Table 3.7.1-4 (Sheets 1-4)	**Accepted for Revision 17 of the DCD and Revision 5 of TR 134**	**NRC218**	**Tier 2**	**NRC Prior Approval Not Required**

Description:

NRC218 contains changes to Sections 2.5.2 and Table 3.7.1-4 to be consistent with RAI-TR03-010, Rev 2

Reference Information:

RAI-TR03-010, Rev 2

AP1000 DCD Impact Report

APP-GW-GL-700, Revision 16, "AP1000 Design Control Document"

DCD Section	Westinghouse Status	Tracking Number	DCD Category	Change Criteria
Sections 2.5.4.1, 2.5.4.6.3 and 3.4.1.1.1, Figure 3.4-4, Chapter 3 TOC	**Accepted for Revision 17 of the DCD and Revision 5 of TR 134**	**NRC227**	**Tier 2**	**NRC Prior Approval Not Required**

Description:

NRC227 contains changes to Section 2.5.4.1, 2.5.4.6.3 and 3.4.1.1.1, Figure 3.4-4 and Chapter 3 TOC to be consistent with RAI-TR85-SEB1-40, Rev 0

Reference Information:

RAI-TR85-SEB1-40, Rev 0

DCD Section	Westinghouse Status	Tracking Number	DCD Category	Change Criteria
Section 2.5.4.2, Table 2-1 (Sheet 1 of 4)	**Accepted for Revision 17 of the DCD and Revision 5 of TR 134**	**NRC224**	**Tier 2**	**NRC Prior Approval Not Required**

Description:

NRC224 contains changes to Section 2.5.4.2 and Table 2-1 (Sheet 1 of 4) to be consistent with RAI-TR85-SEB1-32, Rev 0

Reference Information:

RAI-TR85-SEB1-32, Rev 0

AP1000 DCD Impact Report

APP-GW-GL-700, Revision 16, "AP1000 Design Control Document"

DCD Section	Westinghouse Status	Tracking Number	DCD Category	Change Criteria
Table 2-1 (Sheets 1&3 of 4) and 6.2.1.1-2, Sections 5.4.7.1.2.3, 6.2.2.3, 9.2.2.1.2.1, and 9.2.2.1.2.2	**Accepted for Revision 17 of the DCD and Revision 5 of TR 134**	**NRC264**	**Tier 2**	**NRC Prior Approval Not Required**

Description:

NRC264 contains changes to Table 2-1 (Sheets 1&3 of 4) and 6.2.1.1-2, Sections 5.4.7.1.2.3, 6.2.2.3, 9.2.2.1.2.1 and 9.2.2.1.2.2 to be consistent with APP-GW-GLE-036, Rev 0

Reference Information:

APP-GW-GLE-036, Rev 0

DCD Section	Westinghouse Status	Tracking Number	DCD Category	Change Criteria
Table 2-1 (Sheet 3 of 4)	**Accepted for Revision 17 of the DCD and Revision 5 of TR 134**	**NRC266**	**Tier 2**	**NRC Prior Approval Not Required**

Description:

NRC266 contains changes to Table 2-1 (Sheet 3 of 4) to be consistent with APP-GW-GLE-012, Rev 0

Reference Information:

APP-GW-GLE-012, Rev 0

AP1000 DCD Impact Report

APP-GW-GL-700, Revision 16, "AP1000 Design Control Document"

DCD Section	Westinghouse Status	Tracking Number	DCD Category	Change Criteria
Section 3.2.3	**Accepted for Revision 17 of the DCD and Revision 5 of TR 134**	**NRC255**	**Tier 2**	**NRC Prior Approval Not Required**

Description:

NRC255 contains editorial changes to Section 3.2.3 to change the code reference for pumps to subsection ISTB and for valves to subsection ISTC to be consistent with the designation in the ASME OM code.

Reference Information:

DCD Section	Westinghouse Status	Tracking Number	DCD Category	Change Criteria
Table 3.2-3 (sheet 11 of 65)	**Accepted for Revision 17 of the DCD and Revision 5 of TR 134**	**NRC234**	**Tier 2**	**NRC Prior Approval Not Required**

Description:

NRC234 contains changes to Table 3.2-3 (Sheet 11 of 65) to be consistent with RAI-TR127-SPCV-01, Rev 0

Reference Information:

RAI-TR127-SPCV-01, Rev 0

AP1000 DCD Impact Report

APP-GW-GL-700, Revision 16, "AP1000 Design Control Document"

DCD Section	Westinghouse Status	Tracking Number	DCD Category	Change Criteria
Sections 3.3.3 and 3.5.4	**Accepted for Revision 17 of the DCD and Revision 5 of TR 134**	**NRC258**	**Tier 2**	**NRC Prior Approval Not Required**

Description:

NRC258 contains changes to Sections 3.3.3 and 3.5.4 to be consistent with APP-GW-GLR-020, Rev 4

Reference Information:

APP-GW-GLR-020,Rev 4

DCD Section	Westinghouse Status	Tracking Number	DCD Category	Change Criteria
Table 3.7.1-4 (Sheet 4 of 4)	**Accepted for Revision 17 of the DCD and Revision 5 of TR 134**	**NRC220**	**Tier 2**	**NRC Prior Approval Not Required**

Description:

NRC220 contains changes to Table 3.7.1-4 (Sheet 4 of 4) to be consistent with RAI-TR85-SEB1-05, Rev 0

Reference Information:

RAI-TR85-SEB1-05, Rev 0

AP1000 DCD Impact Report

APP-GW-GL-700, Revision 16, "AP1000 Design Control Document"

DCD Section	Westinghouse Status	Tracking Number	DCD Category	Change Criteria
Sections 3.8.3.6, 5.2.3.4.1, 5.4.2.4.1, 5.4.2.6, 5.4.3.5, 5.4.5.4 and 17.3	**Accepted for Revision 17 of the DCD and Revision 5 of TR 134**	**NRC271**	**Tier 2**	**NRC Prior Approval Not Required**

Description:

NRC271 contains changes to Sections 3.8.3.6, 5.2.3.4.1, 5.4.2.4.1, 5.4.2.6, 5.4.3.5, 5.4.5.4 and 17.3 to be consistent with APP-GW-GLR-109, Rev 0 and RAI-SRP17.3-CQVP-01, Rev 0.

Reference Information:

APP-GW-GLR-109, Rev 0 **RAI-SRP17.3-CQVP-01, Rev 0**

DCD Section	Westinghouse Status	Tracking Number	DCD Category	Change Criteria
Section 3.8.5.4.2	**Accepted for Revision 17 of the DCD and Revision 5 of TR 134**	**NRC221**	**Tier 2**	**NRC Prior Approval Not Required**

Description:

NRC221 contains changes to Section 3.8.5.4.2 to be consistent with RAI-TR85-SEB1-17, Rev 0

Reference Information:

RAI-TR85-SEB1-17, Rev 0

AP1000 DCD Impact Report

APP-GW-GL-700, Revision 16, "AP1000 Design Control Document"

DCD Section	Westinghouse Status	Tracking Number	DCD Category	Change Criteria
Section 3.8.5.4.2	**Accepted for Revision 17 of the DCD and Revision 5 of TR 134**	**NRC222**	**Tier 2**	**NRC Prior Approval Not Required**

Description:

NRC222 contains changes to Section 3.8.5.4.2 to be consistent with RAI-TR85-SEB1-19, Rev 0

Reference Information:

RAI-TR85-SEB1-19, Rev 0

DCD Section	Westinghouse Status	Tracking Number	DCD Category	Change Criteria
Section 3.8.5.5.4, Table 3.8.5-2	**Accepted for Revision 17 of the DCD and Revision 5 of TR 134**	**NRC225**	**Tier 2**	**NRC Prior Approval Not Required**

Description:

NRC225 contains changes to Section 3.8.5.5.4 and Table 3.8.5-2 to be consistent with RAI-TR85-SEB1-34, Rev 1

Reference Information:

RAI-TR85-SEB1-34, Rev 1

AP1000 DCD Impact Report

APP-GW-GL-700, Revision 16, "AP1000 Design Control Document"

DCD Section	Westinghouse Status	Tracking Number	DCD Category	Change Criteria
Sections 3.11.2.1 and 3.11.6	**Accepted for Revision 17 of the DCD and Revision 5 of TR 134**	**NRC230**	**Tier 2**	**NRC Prior Approval Not Required**

Description:

NRC230 contains changes to Sections 3.11.2.1 and 3.11.6 to be consistent with RAI-TR110-ICE1-02, Rev 0

Reference Information:

RAI-TR110-ICE1-02, Rev 0

DCD Section	Westinghouse Status	Tracking Number	DCD Category	Change Criteria
Appendix 3D	**Accepted for Revision 17 of the DCD and Revision 5 of TR 134**	**NRC231**	**Tier 2**	**NRC Prior Approval Not Required**

Description:

NRC231 contains changes to Appendix 3D to be consistent with RAI-TR110-ICE1-03, Rev 0

Reference Information:

RAI-TR110-ICE1-03, Rev 0

AP1000 DCD Impact Report

APP-GW-GL-700, Revision 16, "AP1000 Design Control Document"

DCD Section	Westinghouse Status	Tracking Number	DCD Category	Change Criteria
Section 3D.4.1.2	**Accepted for Revision 17 of the DCD and Revision 5 of TR 134**	**NRC232**	**Tier 2**	**NRC Prior Approval Not Required**

Description:

NRC232 contains changes to 3D.4.1.2 to be consistent with RAI-TR110-ICE1-04, Rev 0

Reference Information:

RAI-TR110-ICE1-04, Rev 0

DCD Section	Westinghouse Status	Tracking Number	DCD Category	Change Criteria
Table 3G.1-1 (Sheets 1-3 of 3),Table 3G.1-2	**Accepted for Revision 17 of the DCD and Revision 5 of TR 134**	**NRC219**	**Tier 2**	**NRC Prior Approval Not Required**

Description:

NRC219 contains changes to Table 3G.1-1 (Sheets 1-3 of 3) and Table 3G.1-2 to be consistent with RAI-TR85-SEB1-04, Rev 0

Reference Information:

RAI-TR85-SEB1-04, Rev 0

AP1000 DCD Impact Report

APP-GW-GL-700, Revision 16, "AP1000 Design Control Document"

DCD Section	Westinghouse Status	Tracking Number	DCD Category	Change Criteria
Section 5.2.1.1	**Accepted for Revision 17 of the DCD and Revision 5 of TR 134**	**NRC270**	**Tier 2**	**NRC Prior Approval Not Required**

Description:

NRC270 contains changes to Section 5.2.1.1 to be consistent with APP-GW-GLE-006, Rev 0.

Reference Information:

APP-GW-GLE-006, Rev 0

DCD Section	Westinghouse Status	Tracking Number	DCD Category	Change Criteria
5.3.2.6, Figure 5.3-4	**Accepted for Revision 17 of the DCD and Revision 5 of TR 134**	**NRC215**	**Tier 2**	**NRC Prior Approval Not Required**

Description:

NRC215 contains changes to section 5.3.2.6 and the addition of a second figure showing the azimuthal locations of the capsules to Figure 5.3-4 to be consistent with RAI-SRP5.3.1-CIB1-01, Rev 0

Reference Information:

RAI-SRP5.3.1-CIB1-01, Rev 0

AP1000 DCD Impact Report

APP-GW-GL-700, Revision 16, "AP1000 Design Control Document"

DCD Section	Westinghouse Status	Tracking Number	DCD Category	Change Criteria
Section 5.4.9.4	**Accepted for Revision 17 of the DCD and Revision 5 of TR 134**	**NRC244**	**Tier 2**	**NRC Prior Approval Not Required**

Description:

NRC244 contains editorial changes in Section 5.4.9.4 to the statement noting the test program for the safety valves complies with the requirements of ANSI/ASME OM, Part1 to ANSI/ASME Appendix I of the OM Code

Reference Information:

DCD Section	Westinghouse Status	Tracking Number	DCD Category	Change Criteria
Section 6.2.1.1.4 and Figure 6.2.1.1-11	**Accepted for Revision 17 of the DCD and Revision 5 of TR 134**	**NRC269**	**Tier 2**	**NRC Prior Approval Not Required**

Description:

NRC269 contains changes to Section 6.2.1.1.4 and Figure 6.2.1.1-11 to be consistent with RAI-TR09-008, Rev 1.

Reference Information:

RAI-TR09-008, Rev 1

AP1000 DCD Impact Report

APP-GW-GL-700, Revision 16, "AP1000 Design Control Document"

DCD Section	*Westinghouse Status*	*Tracking Number*	*DCD Category*	*Change Criteria*
Section 6.2.4.1.2 and 6.2.4.1.3	**Accepted for Revision 17 of the DCD and Revision 5 of TR 134**	**NRC235**	**Tier 2**	**NRC Prior Approval Not Required**

Description:

NRC235 contains a typographical error because Section 6.2.4.1.4 was misnumbered and should be 6.2.4.1.2 which changes 6.2.4.1.5 to 6.2.4.1.3.

Reference Information:

DCD Section	*Westinghouse Status*	*Tracking Number*	*DCD Category*	*Change Criteria*
Sections 6.4.4 and 15.6.5.3.5 and Tables 15.6.5-2 (Sheet 2 of 3) and 15.6.5-3	**Accepted for Revision 17 of the DCD and Revision 5 of TR 134**	**NRC233**	**Tier 2**	**NRC Prior Approval Not Required**

Description:

NRC 233 contains changes to Sections 6.4.4 and 15.6.5.3.5 and Tables 15.6.5-2 (Sheet 2 of 3) and 15.6.5-3 to be consistent with RAI-TR122-SPCV-01, Rev 0 and APP-GW-GLN-122, Rev 0

Reference Information:

APP-GW-GLN-122, Rev 0 **RAI-TR122-SPCV-01, Rev 0**

AP1000 DCD Impact Report

APP-GW-GL-700, Revision 16, "AP1000 Design Control Document"

DCD Section	Westinghouse Status	Tracking Number	DCD Category	Change Criteria
Section 7.1	**Accepted for Revision 17 of the DCD and Revision 5 of TR 134**	**NRC239**	**Tier 2**	**NRC Prior Approval Not Required**

Description:

NRC239 contains editorial changes to Section 7.1 to be consistent with, TR080, APP-GW-GLR-080 Rev 0 (This change includes a portion of the items from TR080 that were missed in previous revisions of TR134)

Reference Information:

APP-GW-GLR-080, Rev 0 (TR080)

DCD Section	Westinghouse Status	Tracking Number	DCD Category	Change Criteria
Section 7.1.1	**Accepted for Revision 17 of the DCD and Revision 5 of TR 134**	**NRC272**	**Tier 2**	**NRC Prior Approval Not Required**

Description:

NRC272 contains editorial changes to Section 7.1.1 to be consistent with Figure 7.1-1

Reference Information:

Attachment A

AP1000 DCD Impact Report

APP-GW-GL-700, Revision 16, "AP1000 Design Control Document"

DCD Section	*Westinghouse Status*	*Tracking Number*	*DCD Category*	*Change Criteria*
Section 7.2, Table 7.2-1 (Sheet 1-3 of 3), Table 7.2-2 (Sheet 2 of 2)	**Accepted for Revision 17 of the DCD and Revision 5 of TR 134**	**NRC240**	**Tier 2**	**NRC Prior Approval Not Required**

Description:

NRC240 contains editorial changes to section 7.2, Table 7.2-1 (sheets 1-3 of 3) and Table 7.2-2 (sheet 2 of 2) to be consistent with, TR080, APP-GW-GLR-080 Rev 0 (This change includes a portion of the items from TR080 that were missed in previous revisions of TR134)

Reference Information:

APP-GW-GLR-080, Rev 0
(TR080)

Attachment A

AP1000 DCD Impact Report

APP-GW-GL-700, Revision 16, "AP1000 Design Control Document"

DCD Section	*Westinghouse Status*	*Tracking Number*	*DCD Category*	*Change Criteria*
Section 7.3, 7.7.1 and Tables 7.3-1 (Sheets 1,4 and 8 of 9), 7.3-4 (Sheet 1 of 2) and 7.5-1 (Sheet 10 of 12)	**Accepted for Revision 17 of the DCD and Revision 5 of TR 134**	**NRC241**	**Tier 2**	**NRC Prior Approval Not Required**

Description:

NRC241 contains editorial changes to Section 7.3, 7.7.1 and Tables 7.3-1 (Sheets 1,4 and 8 of 9), 7.3-4 (Sheet 1 of 2) and 7.5-1 (Sheet 10 of 12) to be consistent with, TR080, APP-GW-GLR-080 Rev 0 (This change includes a portion of the items from TR080 that were missed in previous revisions of TR134)

Reference Information:

APP-GW-GLR-080, Rev 0 (TR080)

AP1000 DCD Impact Report

APP-GW-GL-700, Revision 16, "AP1000 Design Control Document"

DCD Section	Westinghouse Status	Tracking Number	DCD Category	Change Criteria
Section 8.3.1.1.1	**Accepted for Revision 17 of the DCD and Revision 5 of TR 134**	**NRC252**	**Tier 2**	**NRC Prior Approval Not Required**

Description:

NRC252 contains changes to Section 8.3.1.1.1 to be consistent with RAI-SRP8.2-EEB-03, Rev 0

Reference Information:

RAI-SRP8.2-EEB-03, Rev 0

DCD Section	Westinghouse Status	Tracking Number	DCD Category	Change Criteria
Table 9.1-1	**Accepted for Revision 17 of the DCD and Revision 5 of TR 134**	**NRC257**	**Tier 2**	**NRC Prior Approval Not Required**

Description:

NRC257 contains changes to Table 9.1-1 to be consistent with RAI-TR54-029, Rev 1

Reference Information:

RAI-TR54-029, Rev 1

AP1000 DCD Impact Report

APP-GW-GL-700, Revision 16, "AP1000 Design Control Document"

DCD Section	Westinghouse Status	Tracking Number	DCD Category	Change Criteria
Figures 9.1-2 (Sheets 1&2), 9.1-3 (Sheets 1&2), 9.1-4, Figure 4.3-1 (TS)	**Accepted for Revision 17 of the DCD and Revision 5 of TR 134**	**NRC256**	**Tier 2**	**NRC Prior Approval Not Required**

Description:

NRC256 replaces Figures 9.1-2 (Sheets 1&2), 9.1-3 (Sheets 1&2), 9.1-4 and 4.3-1 (TS) with new figures to be consistent with RAI-TR54-015, Rev 2 and APP-GW-GLR-033, Rev 2

Reference Information:

APP-GW-GLR-033, Rev 2 **RAI-TR54-015, Rev 2**

DCD Section	Westinghouse Status	Tracking Number	DCD Category	Change Criteria
Section 9.5.4.7.2	**Accepted for Revision 17 of the DCD and Revision 5 of TR 134**	**NRC217**	**Tier 2**	**NRC Prior Approval Not Required**

Description:

NRC217 contains changes to Section 9.5.4.7.2 to be consistent with RAI-SRP9.5.4-CIB1-01, Rev 0

Reference Information:

RAI-SRP9.5.4-CIB1-01, Rev 0

AP1000 DCD Impact Report

APP-GW-GL-700, Revision 16, "AP1000 Design Control Document"

DCD Section	Westinghouse Status	Tracking Number	DCD Category	Change Criteria
Section 14.4.6	**Accepted for Revision 17 of the DCD and Revision 5 of TR 134**	**NRC254**	**Tier 2**	**NRC Prior Approval Not Required**

Description:

NRC254 contains changes to Section 14.4.6 to be consistent with RAI-TR06-003, Rev 0

Reference Information:

RAI-TR06-003, Rev 0

DCD Section	Westinghouse Status	Tracking Number	DCD Category	Change Criteria
Section 15.4.8.3.6	**Accepted for Revision 17 of the DCD and Revision 5 of TR 134**	**NRC237**	**Tier 2**	**NRC Prior Approval Not Required**

Description:

NRC237 contains a change to Section 15.4.8.3.6 returning the dose from 6.9 rem to 5.5 rem to be consistent with APP-GW-GLN-122, Rev 0 (This change includes a portion of the items from TR122 that were missed in previous revisions of TR134)

Reference Information:

APP-GW-GLN-122, Rev 0

AP1000 DCD Impact Report

APP-GW-GL-700, Revision 16, "AP1000 Design Control Document"

DCD Section	Westinghouse Status	Tracking Number	DCD Category	Change Criteria
Tech spec B3.7.1	**Accepted for Revision 17 of the DCD and Revision 5 of TR 134**	**NRC243**	**Tier 2**	**NRC Prior Approval Not Required**

Description:

NRC243 contains editorial changes to the title of reference 5 of Tech Spec B3.7.1

Reference Information:

DCD Section	Westinghouse Status	Tracking Number	DCD Category	Change Criteria
Chapter 16 - Tech Spec B3.9.7	**Accepted for Revision 17 of the DCD and Revision 5 of TR 134**	**NRC236**	**Tier 2**	**NRC Prior Approval Not Required**

Description:

NRC236 contains a change to Chapter 16 Tech Spec B 3.97 - Decay Time should be changed from 100 hours to 48 hours to be consistent with APP-GW-GLN-122, Rev 0 (This change includes a portion of the items from TR122 that were missed in previous revisions of TR134)

Reference Information:

APP-GW-GLN-122, Rev 0

AP1000 DCD Impact Report

APP-GW-GL-700, Revision 16, "AP1000 Design Control Document"

DCD Section	Westinghouse Status	Tracking Number	DCD Category	Change Criteria
Sections 16.3.1, 17.4.1, 17.4.3, 17.4.4, 17.4.6, 17.4.8, 17.5.8, 17.6 and Figure 17.4-1	**Accepted for Revision 17 of the DCD and Revision 5 of TR 134**	**NRC251**	**Tier 2**	**NRC Prior Approval Not Required**

Description:

NRC251 contains changes to Sections 16.3.1, 17.4.1, 17.4.3, 17.4.4, 17.4.6, 17.4.8, 17.5.8, 17.6 and Figure 17.4-1 to be consistent with APP-GW-GLR-117, Rev 1

Reference Information:

APP-GW-GLR-117, Rev 1

DCD Section	Westinghouse Status	Tracking Number	DCD Category	Change Criteria
Section 18.11.1	**Accepted for Revision 17 of the DCD and Revision 5 of TR 134**	**NRC262**	**Tier 2**	**NRC Prior Approval Not Required**

Description:

NRC262 contains changes to Section 18.11.1 to be consistent with APP-GW-GLR-084, Rev 1

Reference Information:

APP-GW-GLR-084, Rev 1 (TR084)

AP1000 DCD Impact Report

APP-GW-GL-700, Revision 16, "AP1000 Design Control Document"

DCD Section	Westinghouse Status	Tracking Number	DCD Category	Change Criteria
Section 19.58.1 and 19.58.3	**Accepted for Revision 17 of the DCD and Revision 5 of TR 134**	**NRC228**	**Tier 2**	**NRC Prior Approval Not Required**

Description:

NRC228 contains changes to Section 19.58.1 and 19.58.3 to be consistent with RAI-TR101-SPLA-03, Rev 1

Reference Information:

RAI-TR101-SPLA-03, Rev 1

DCD Section	Westinghouse Status	Tracking Number	DCD Category	Change Criteria
Section 19.58.2.2	**Accepted for Revision 17 of the DCD and Revision 5 of TR 134**	**NRC229**	**Tier 2**	**NRC Prior Approval Not Required**

Description:

NRC229 contains changes to Section 19.58.2.2 to be consistent with RAI-TR101-SPLA-06, Rev 1

Reference Information:

RAI-TR101-SPLA-06, Rev 1

Attachment B

DCD Markup Pages

APP-GW-GLR-134
Revision 5

Table 1-1 (Cont.)
Index of AP1000 Tier 2 Information Requiring NRC Approval for Change

Item	Expiration at First Full Power	Tier 2 Reference
Design Summary of Critical Sections Outside Containment (Cont.)		Table 3H.5-8 Table 3H.5-9 Table 3H.5-10 Table 3H.5-11 Table 3H.5-12 Table 3H.5-13 Figure 3H.2-1 Figure 3H.5-1 Figure 3H.5-2 Figure 3H.5-3 Figure 3H.5-4 Figure 3H.5-5 Figure 3H.5-6 Figure 3H.5-7 Figure 3H.5-8 Figure 3H.5-9 Figure 3H.5-10 Figure 3H.5-12
Design Summary of Critical Sections for Nuclear Island Basemat	Yes	3.8.5.4.4 Table 3.8.5-3
Seismic Qualification Standards	Yes	3.10.1.1
Methods and Procedures for Qualifying Electrical Equipment, Instrumentation, and Mechanical Components	Yes	3.10.2
NRC 261 ~~Experienced-Based Qualification~~	~~Yes~~	~~3.10.6~~
MOV Design and Qualification	Yes	5.4.8.1.2
Other Power-Operated Valves Design and Qualification	Yes	5.4.8.1.3
Motor Operated Valves	Yes	5.4.8.5.2
Power Operated Valves	Yes	5.4.8.5.3
N-284-1 Metal Containment Shell Buckling Design Methods, Section III, Division I Class MC	Yes	Table 5.2-3
WCAP-14605, "Westinghouse Setpoint Methodology for Protection Systems, AP600," Rev 0	Yes	Chapter 7 Table 1.6-1
WCAP-16097-P-A, "Common Qualified Platform," Rev 0	Yes	Chapter 7 Table 1.6-1
WCAP-16096-NP-A, "Software Program Manual for Common Q Systems," Rev 01A	Yes	Chapter 7 Table 1.6-1
Verification and Validation	Yes	7.1.2.14

Table 2.2.3-4 (cont.)
Inspections, Tests, Analyses, and Acceptance Criteria

Design Commitment	Inspections, Tests, Analyses	Acceptance Criteria
	IRWST Injection: The IRWST will be partially filled with water. All valves in these lines will be open during the test. Sufficient flow will be provided to fully open the check valves.	IRWST Injection: The calculated flow resistance for each IRWST injection line between the IRWST and the reactor vessel is: Line A: $\geq 5.53 \times 10^{-6}$ ft/gpm^2 and $\leq 9.20 \times 10^{-6}$ ft/gpm^2 and Line B: $\geq 6.21 \times 10^{-6}$ ft/gpm^2 and $\leq 1.03 \times 10^{-5}$ ft/gpm^2.
	Containment Recirculation: A temporary water supply will be connected to the recirculation lines. All valves in these lines will be open during the test. Sufficient flow will be provided to fully open the check valves.	Containment Recirculation: The calculated flow resistance for each containment recirculation line between the containment and the reactor vessel is: Line A: $\leq 1.11 \times 10^{-5}$ ft/gpm^2 and Line B: $\leq 1.04\cancel{3} \times 10^{-5}$ ft/gpm^2.
	ii) A low-pressure test and analysis will be conducted for each CMT to determine piping flow resistance from the cold leg to the CMT. The test will be performed by filling the CMT via the cold leg balance line by operating the normal residual heat removal pumps.	ii) The flow resistance from the cold leg to the CMT is $\leq 7.21 \times 10^{-6}$ ft/gpm^2.

NRC 249

Table 2.2.3-4 (cont.)
Inspections, Tests, Analyses, and Acceptance Criteria

Design Commitment	Inspections, Tests, Analyses	Acceptance Criteria
	vii) Inspection of the as-built components will be conducted for plates located above the containment recirculation screens.	vii) Plates located above each containment recirculation screen are no more than 1 ft above the top of the screen and extend out at least 10 ft perpendicular to and at least 7 ft to the side of the screen surface.
NRC 249	viii) Inspections of the IRWST and containment recirculation screens will be conducted. The inspections will include measurements of the pockets and the number of pockets used in each screen. The pocket frontal face area is based on a width times a height. The width is the distance between pocket centerlines for pockets located beside each other. The height is the distance between pocket centerlines for pockets located above each other. The pocket screen area is the total area of perforated plate inside each pocket; this area will be determined by inspection of the screen manufacturing drawings.	viii) The screens utilize pockets with a frontal face area of ≥ 6.2 in^2 and a screen surface area ≥ 140 in^2 per pocket. Each IRWST screen has a sufficient number of pockets to provide a frontal face area ≥ 20 ft^2 and a screen surface area ~~of each IRWST screen is~~ ≥ 500 ft^2. ~~The screen surface area of e~~Each containment recirculation screen has a sufficient number of pockets to provide a frontal face area ≥ 105 ft^2 and a screen surface area~~is >~~ ≥ 2500 ft^2. A debris curb exists in front ~~The bottom~~ of the containment recirculation screens which is ≥ 2 ft above the loop compartment floor. The bottom of the IRWST screens are located ≥ 6 in above the bottom of the IRWST.
	ix) Inspections will be conducted of the insulation used inside the containment on ASME Class 1 lines and on the reactor vessel, reactor coolant pumps, pressurizer and steam generators.	ix) The type of insulation used on these lines and equipment is a metal reflective type or a suitable equivalent.
	x) Inspections will be conducted of the as-built nonsafety-related coatings or of plant records of the nonsafety-related coatings used inside containment on walls, floors, ceilings, structural steel which is part of the building structure and on the polar crane.	x) A report exists and concludes that the coatings used on these surfaces has a dry film density of ≥ 100 lb/ft^3.

Table 2.2.3-4 (cont.)
Inspections, Tests, Analyses, and Acceptance Criteria

Design Commitment	Inspections, Tests, Analyses	Acceptance Criteria
	xii) Inspections will be conducted of the CMT level sensors (PSX-11A/B/D/C, - 12A/B/C/D, - 13A/B/C/D, - 14A/B/C/D) upper level tap lines. xiii) Inspections will be conducted of the surfaces in the vicinity of the containment recirculation screens. The surfaces in the vicinity of the containment recirculation screens are the surfaces located above the bottom of the recirculation screens up to and including the bottom surface of the plate discussed in Table 2.2.3-4, item 8.c.vii, out at least 10 feet perpendicular to and at least 7 feet perpendicular to the side of the ~~trash rack portion of the~~ screen face. xiv) Inspections will be conducted of the exposed surfaces of the source range, intermediate range, and power range detectors.	xii) Each upper level tap line has a downward slope of ≥ 2.4 degrees from the centerline of the connection to the CMT to the centerline of the connection to the standpipe. xiii) These surfaces are stainless steel. xiv) These surfaces are made of stainless steel or titanium.
8.d) The PXS provides pH adjustment of water flooding the containment following design basis accidents.	Inspections of the pH adjustment baskets will be conducted.	pH adjustment baskets exist, with a total calculated volume ≥ 560 ft^3. The pH baskets are located below plant elevation 107 ft, 2 in.
9.a) The PXS provides a function to cool the outside of the reactor vessel during a severe accident.	i) A flow test and analysis for each IRWST drain line to the containment will be conducted. The test is initiated by opening isolation valves in each line. Test fixtures may be used to simulate squib valves. ii) Inspections of the as-built reactor vessel insulation will be performed.	i) The calculated flow resistance for each IRWST drain line between the IRWST and the containment is ≤ 4.07×10^{-6} ft/gpm^2. ii) The combined total flow area of the water inlets is not less than 6 ft^2. The combined total flow area of the steam outlet(s) is not less than 12 ft^2.

NRC 249

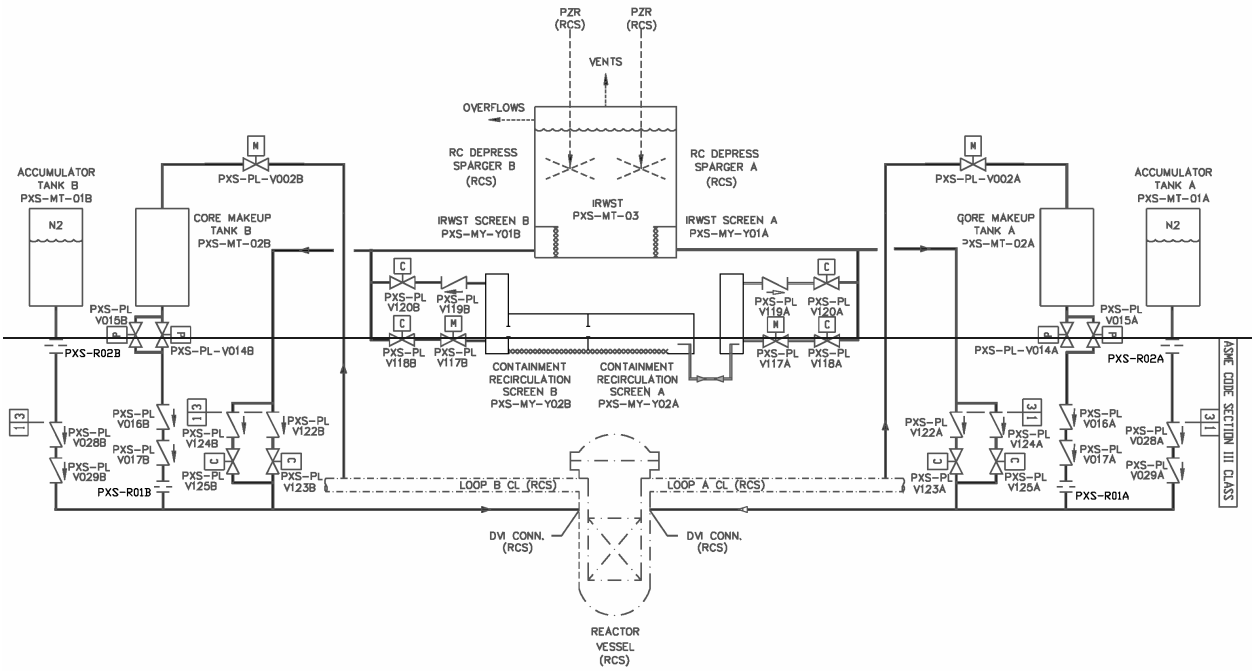
PZR (RCS)
PZR (RCS)
VENTS
OVERFLOWS
RC DEPRESS SPARGER B (RCS)
RC DEPRESS SPARGER A (RCS)
IRWST PXS-MT-03
IRWST SCREEN B PXS-MY-Y01B
IRWST SCREEN A PXS-MY-Y01A
ACCUMULATOR TANK B PXS-MT-01B
ACCUMULATOR TANK A PXS-MT-01A
CORE MAKEUP TANK B PXS-MT-02B
CORE MAKEUP TANK A PXS-MT-02A
PXS-PL-V002B
PXS-PL-V002A
N2
PXS-PL V015B
PXS-PL-V014B
PXS-R02B
PXS-PL V120B
PXS-PL V119B
PXS-PL V118B
PXS-PL V117B
PXS-PL V119A
PXS-PL V120A
PXS-PL V117A
PXS-PL V118A
CONTAINMENT RECIRCULATION SCREEN B PXS-MY-Y02B
CONTAINMENT RECIRCULATION SCREEN A PXS-MY-Y02A
PXS-PL-V014A
PXS-PL V015A
PXS-R02A
ASME CODE SECTION III CLASS
PXS-PL V016B
PXS-PL V028B
PXS-PL V017B
PXS-PL V029B
PXS-R01B
PXS-PL V124B
PXS-PL V125B
PXS-PL V122B
PXS-PL V123B
LOOP B CL (RCS)
LOOP A CL (RCS)
PXS-PL V122A
PXS-PL V123A
PXS-PL V124A
PXS-PL V125A
PXS-PL V016A
PXS-PL V017A
PXS-PL V028A
PXS-PL V029A
PXS-R01A
DVI CONN. (RCS)
DVI CONN. (RCS)
REACTOR VESSEL (RCS)

NRC 249

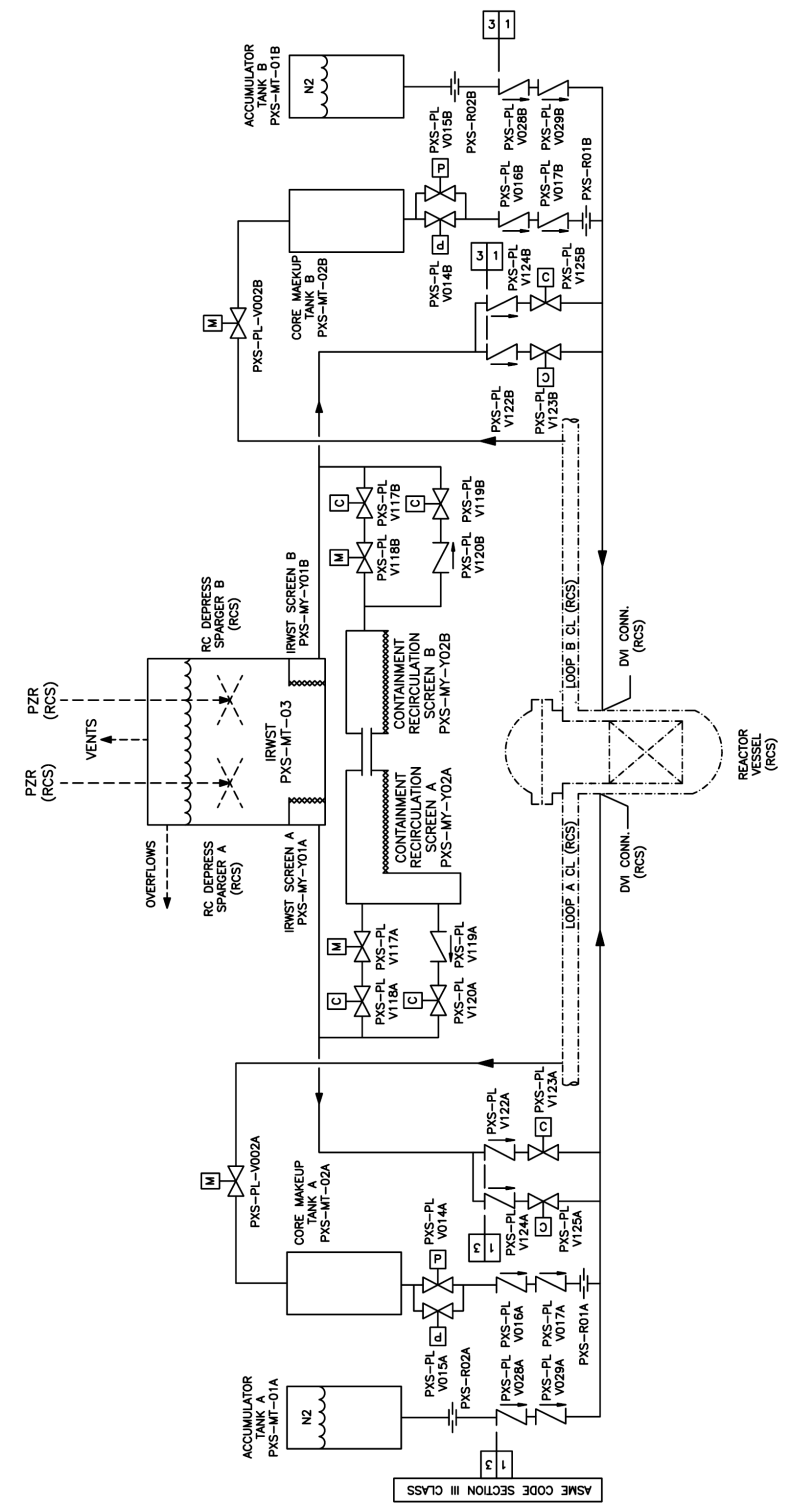

Figure 2.2.3-1 (Sheet 2 of 2)
Passive Core Cooling System

Security-Related Information, Withhold Under 10 CFR 2.390d

NRC 249

Figure 3.3-5
Nuclear Island Plan View at Elevation 96′-6″

Table 5.0-1
Site Parameters

Maximum Ground Water Level	Plant elevation 98 ft
Maximum Flood Level	Plant elevation 100 ft (design grade elevation)
Precipitation	
NRC 265 Rain	20.7~~19.4~~ in./hr [1-hr 1-mi^2 PMP]~~(6.3 in./5 min)~~
Snow/Ice	Ground snow load of 75 lb/ft^2 with exposure factor of 1.0 and importance factor of 1.2
Air Temperature	Limits based on historical data excluding peaks of less than 2 hours duration NRC 263 Maximum temperature of 115° dry bulb/86.1~~80~~°F coincident wet bulb Maximum wet bulb 86.1~~85.5~~°F (noncoincident) Minimum temperature of -40°F
Tornado	
Wind Speed	Maximum wind speed of 300 mph
Maximum Pressure Differential	Maximum pressure differential of 2.0 lb/in^2
Tornado Missile Spectra	4000-lb automobile at 105 mph horizontal, 74 mph vertical 275-lb, 8-in. shell at 105 mph horizontal, 74 mph vertical 1-in.-diameter steel ball at 105 mph in the most damaging direction

Table 5.0-1 (cont.)
Site Parameters

Soil	
Average Allowable Static Soil Bearing Capacity	Greater than or equal to 8,600 lb/ft^2 over the footprint of the nuclear island at its excavation depth
NRC 223 Maximum Allowable Dynamic Bearing Capacity for Normal Plus Safe Shutdown Earthquake (SSE)	Greater than or equal to 35,000 lb/ft^2 at the edge of the nuclear island at its excavation depth, or Site-specific analyses demonstrate factor of safety appropriate for normal plus safe shutdown earthquake loads
Lateral Variability	Soils supporting the nuclear island should not have extreme variations in subgrade stiffness. This may be demonstrated by one of the following: 1. Soils supporting the nuclear island are uniform in accordance with Regulatory Guide 1.132 if the geologic and stratigraphic features at depths less than 120 feet below grade can be correlated from one boring or sounding location to the next with relatively smooth variations in thicknesses or properties of the geologic units, or 2. Site specific assessment of subsurface conditions demonstrates that the bearing pressures below the footprint of the nuclear island do not exceed 120% of those from the generic analyses of the nuclear island at a uniform site, or 3. Site specific analysis of the nuclear island basemat demonstrates that the site specific demand is within the capacity of the basemat. As an example of sites that are considered uniform, the variation of shear wave velocity in the material below the foundation to a depth of 120 feet below finished grade within the nuclear island footprint meets the criteria in the case outlined below. Case 1: For a layer with a low strain shear wave velocity greater than or equal to 2500 feet per second, the layer should have approximately uniform thickness, should have a dip not greater than 20 degrees, and should have less than 20 percent variation in the shear wave velocity from the average velocity in any layer.
Shear Wave Velocity	Greater than or equal to 1000 ft/sec based on low-strain, best-estimate soil properties over the footprint of the nuclear island at its excavation depth
Liquefaction Potential	Negligible

TIER 2 MASTER TABLE OF CONTENTS (Cont.)

Section	Title	Page
APPENDIX 19F	MALEVOLENT AIRCRAFT IMPACT	19F-1
19F.1	Introduction	19F-1
	19F.1.2 Scope	19F-1
19F.2	Background	19F-1
19F.3	Results/Conclusions	19F-1
19F.4	References	19F-1

NRC 248

Security-Related Information, Withhold Under 10 CFR 2.390d

NRC 250

Figure 1.2-6

Nuclear Island General Arrangement Plan at Elevation 96′-6″

Security-Related Information, Withhold Under 10 CFR 2.390d

NRC 245

Figure 1.2-18

Annex Building General Arrangement Plan at Elevation 100′-0″ & 107′-2″

Table 1.3-1 (Sheet 2 of 6)

AP1000 PLANT COMPARISON WITH SIMILAR FACILITIES

Systems – Components	DCD	AP1000	AP600	Reference 2 Loop
Reactor Vessel	5.3			
Vessel ID		159 in	157 in	172 in
Construction		forged rings	forged rings	welded plate
Number hot leg nozzles		2	2	2
– ID		31.0 in	31.0 in	42 in
Number cold leg nozzles		4	4	4
– ID		22.0 in	22.0 in	30 in
Number safety injection nozzles		2	2	0
Steam Generators	5.4.2			
Type		Vertical U-tube Recirc. design	Vertical U-tube Recirc. design	Vertical U-tube Recirc. design
Model		Delta-125	Delta-75	–
Number		2	2	2
Heat transfer area/SG		123,538 ft^2	75,180 ft^2	103,574 ft^2
Number tubes/SG		10,025	6,307	9,300
Tube material		I 690 TT	I 690 TT	I 600 TT
Separate startup feedwater nozzle		Yes	Yes	No
Reactor Coolant Pumps	5.4.1			
NRC 216 Type		canned~~sealless~~	canned	shaft seal
Number		4	4	4
Rated HP		7,300 hp/pump	≤3,500 hp/pump	9,700 hp/pump
Estimated flow/loop		150,000 gpm	102,000 gpm	198,000 gpm

Table 1.6-1 (Sheet 12 of 20)

MATERIAL REFERENCED

DCD Section Number	Westinghouse Topical Report Number	Title
6A	WCAP-15846 (P) WCAP-15862	WGOTHIC Application to AP600 and AP1000, Revision 1, March 2004
	WCAP-14135 (P) WCAP-14138	Final Data Report for Passive Containment Cooling System Large Scale Test, Phase 2 and Phase 3, Revision 3, November 1998
	WCAP-15613 (P) WCAP-15706	AP1000 PIRT and Scaling Assessment Report, March 2001
7.1	*[WCAP-14605 (P)* *WCAP-14606 (NP)*	*Westinghouse Setpoint Methodology for Protection Systems – AP600, April 1996]**
	WCAP-16361-P WCAP-16361-NP	Westinghouse Setpoint Methodology for Protection Systems - AP1000, May 2006
	[*WCAP-16096-NP-A*	*Software Program Manual for Common Q Systems, Revision 01A, January 2004*]*
	[*WCAP-16097-P-A)* *WCAP-16097-NP-A*	*Common Qualified Platform, Revision 01, May 2003*]*
NRC 238	WCAP-15775	AP1000 Instrumentation and Control Defense-in-Depth and Diversity Report, March 2003
	WCAP-15776	Safety Criteria for the AP1000 Instrumentation and Control Systems, April 2002
	WCAP-16675-P WCAP-16675-NP	AP1000 Protection and Safety Monitoring System Architecture Technical Report, February 2007
NRC 238	APP-GW-GLR-017	AP1000 Standard Combined License Technical Report, Resolution of Common Q NRC Items
	NABU-DP-00014-GEN (P)	Design Process for Common Q Safety Systems, Revision 1, March 2006
		Westinghouse Electric Company Quality Management System (QMS), (Non-Proprietary), Revision 5, October 2002
	APP-GW-GLR-104	AP1000 Cyber Security Implementation, May 2007
7.2	WCAP-16438-P WCAP-16438-NP	FMEA of AP1000 Protection and Safety Monitoring System, Revision 1, June 2006
	WCAP-16592-P WCAP-16592-NP	Software Hazards Analysis of AP1000 Protection and Safety Monitoring System, Revision 0, June 2006

*NRC Staff approval is required prior to implementing a change in this information; see DCD Introduction Section 3.5.

Table 1.6-1 (Sheet 12 of 20)

MATERIAL REFERENCED

DCD Section Number	Westinghouse Topical Report Number	Title
6A	WCAP-15846 (P) WCAP-15862	WGOTHIC Application to AP600 and AP1000, Revision 1, March 2004
	WCAP-14135 (P) WCAP-14138	Final Data Report for Passive Containment Cooling System Large Scale Test, Phase 2 and Phase 3, Revision 3, November 1998
	WCAP-15613 (P) WCAP-15706	AP1000 PIRT and Scaling Assessment Report, March 2001
~~7.1~~	~~WCAP-13382 (P)~~ ~~WCAP-13391~~ ~~[*WCAP-13383*~~	~~AP600 Instrumentation and Control Hardware Description, May 1992~~ ~~*AP600 Instrumentation and Control Hardware and Software Design, Verification, and Validation Process Report, Revision 1, June 1996*]*~~
7.1	*[WCAP-14605 (P)* *WCAP-14606 (NP)*	*Westinghouse Setpoint Methodology for Protection Systems – AP600, April 1996]**
	~~[~~WCAP-16361-P WCAP-16361-NP	Westinghouse Setpoint Methodology for Protection Systems - AP1000, May 2006~~]*~~
	~~WCAP-14080 (P)~~ ~~WCAP-14081~~	~~AP600 Instrumentation and Control Software Architecture and Operation Description, June 1994~~
	[*WCAP-16096-NP-A*~~*CE-CES-195*~~	*Software Program Manual for Common Q Systems, Revision 01A, January 2004*~~*May 2000*~~]*
	[*WCAP-16097-P-A* ~~*CENPD-396-P (P)*~~ *WCAP-16097-NP-A*	*Common Qualified Platform, Revision 01, May 2003*~~*0*~~]*
	~~[*WCAP-15927*~~	~~*Design Process for AP1000 Common Q Safety Systems, August 2002*]*~~
	WCAP-15776	Safety Criteria for the AP1000 Instrumentation and Control Systems, April 2002
	WCAP-16675-P WCAP-16675-NP	AP1000 Protection and Safety Monitoring System Architecture Technical Report, February 2007
7.2	WCAP-16438-P WCAP-16438-NP	FMEA of AP1000 Protection and Safety Monitoring System, Revision 1, June 2006
	WCAP-16592-P WCAP-16592-NP	Software Hazards Analysis of AP1000 Protection and Safety Monitoring System, Revision 0, June 2006

NRC 153

NRC 153

NRC 153

(P) Denotes Document is Proprietary

*NRC Staff approval is required prior to implementing a change in this information; see DCD Introduction Section 3.5.

TR-134, Rev 0

NRC 153

	WCAP-15776	Safety Criteria for the AP1000 Instrumentation and Control Systems, April 2002
	WCAP-16097-P-A WCAP-16097-NP-A	Common Qualified Platform, Digital Plant Protection System, Appendix 3, May 2003
7.3	WCAP-15776	Safety Criteria for the AP1000 Instrumentation and Control Systems, April 2002

TR-134, Rev 0

*NRC Staff approval is required prior to implementing a change in this information; see DCD Introduction Section 3.5.

Table 1.8-2 (Sheet 4 of 13)

SUMMARY OF AP1000 STANDARD PLANT COMBINED LICENSE INFORMATION ITEMS

Item No.	Subject	Subsection	Addressed by Westinghouse Document	Action Required by COL Applicant	Action Required by COL Holder
3.8-2	Deleted Passive Containment Cooling System Water Storage Tank Examination	Deleted	APP-GW-GLR-021	N/A	N/A
3.8-3	Deleted As-Built Summary Report	Deleted	APP-GW-GLR-021	N/A	N/A
3.8-4	Deleted In-Service Inspection of Containment Vessel	Deleted	APP-GW-GLR-021	N/A	N/A
3.9-1	Reactor Internal Vibration Response	3.9.8.1	WCAP-16687-P	No	No
3.9-2	Design Specification and Reports	3.9.8.2	APP-GW-GLR-021	No	Yes
3.9-3	Snubber Operability Testing	3.9.8.3	N/A	Yes	–
3.9-4	Valve Inservice Testing	3.9.8.4	APP-GW-GLN-020	Yes	–
3.9-5	Surge Line Thermal Monitoring	3.9.8.5	N/A	Yes	–
3.9-6	Piping Benchmark Program	3.9.8.6	APP-GW-GLR-006	No	No
3.10-1	Deleted Experience-Based Qualification	Deleted~~3.10.6~~	~~APP-GW-GLN-006~~ ~~APP-GW-GLR-031~~	N/A~~No~~	N/A~~No~~
3.11-1	Equipment Qualification File	3.11.5	APP-GW-GLN-110	No	Yes
4.2-1	Changes to Reference Reactor Design	4.2.5	APP-GW-GLR-059	No	No
4.3-1	Changes to Reference Reactor Design	4.3.4	APP-GW-GLR-059 APP-GW-GLR-119	No	No
4.4-1	Changes to Reference Reactor Design	4.4.7	APP-GW-GLR-059 WCAP-16652-NP, Rev. 0	No	No

NRC 261

Table 1.8-2 (Sheet 11 of 13)

SUMMARY OF AP1000 STANDARD PLANT COMBINED LICENSE INFORMATION ITEMS

Item No.	Subject	Subsection	Addressed by Westinghouse Document	Action Required by COL Applicant	Action Required by COL Holder
NRC 268 13.6-5	Cyber Security Program	13.6	APP-GW-GLR-104	No	Yes
14.4-1	Organization and Staffing	14.4.1	N/A	Yes	–
14.4-2	Test Specifics and Procedures	14.4.2	APP-GW-GLR-037	No	Yes
14.4-3	Conduct of Test Program	14.4.3	APP-GW-GLR-038	No	No
14.4-4	Review and Evaluation of Test Results	14.4.4	N/A	No	Yes
14.4-5	Testing Interface Requirements	14.4.5	N/A	Yes	–
14.4-6	First-Plant-Only and Three-Plant-Only Tests	14.4.6	APP-GW-GLR-021	Yes	Yes
15.7-1	Consequences of Tank Failure	15.7.6	N/A	Yes	–
16.1-1	Technical Specification Preliminary Information	16.1	APP-GW-GLR-064 APP-GW-GLN-075	Yes	–
16.3-1	Procedure to Control Operability of Investment Protection Systems, Structures and Components	16.3.2	N/A	Yes	–
17.5-1	Quality Assurance Design Phase	17.5.1	N/A	Yes	–
17.5-2	Quality Assurance for Procurement, Fabrication, Installation, Construction and Testing	17.5.2	N/A	Yes	–
17.5-3	Design Reliability Assurance Program/Site Specific List of Systems, Structures and Components	17.5.3	APP-GW-GLR-117	No	No

Table 1.9-1 (Sheet 3 of 15)

REGULATORY GUIDE/DCD SECTION CROSS-REFERENCES

Division 1 Regulatory Guide		DCD Chapter, Section or Subsection
1.28	Quality Assurance Program Requirements (Design and Construction) (Rev. 3, August 1985)	2.5 17
1.29	Seismic Design Classification (Rev. 3, September 1978)	3.2.1
1.30	Quality Assurance Requirements for the Installation, Inspection, and Testing of Instrumentation and Electric Equipment (Rev. 0, August 11, 1972)	This regulatory guide is not applicable to AP1000 design certification.
1.31	Control of Ferrite Content in Stainless Steel Weld Metal (Rev. 3, April 1978)	4.5.1 4.5.2 5.2.3 5.3.2 6.1.1
1.32	Criteria for Safety-Related Electric Power Systems for Nuclear Power Plants (Rev. 2, February 1977)	8.1 8.2 8.3.1 8.3.2 16.1 Bases
NRC 247 1.33	Quality Assurance Program Requirements (Operation) (~~Second Proposed~~ Rev. 2~~3~~, February 1978~~November 1980~~)	3.11.2.1 3D.4.1.2 3D.6.4
1.34	Control of Electroslag Weld Properties (Rev. 0, December 28, 1972)	4.5.2 5.2.3 5.3.2
1.35	Inservice Inspection of Ungrouted Tendons in Pre-stressed Concrete Containments (Rev. 3, July 1990)	This regulatory guide is not applicable to AP1000.
1.35.1	Determining Prestressing Forces for Inspection of Prestressed Concrete Containments (Rev. 0, July 1990)	This regulatory guide is not applicable to AP1000.
1.36	Nonmetallic Thermal Insulation for Austenitic Stainless Steel (Rev. 0, February 23, 1973)	5.2.3 6.1.1
1.37	Quality Assurance Requirements for cleaning of Fluid Systems and Associated Components of Water-Cooled Nuclear Power Plants (Rev. 0, March 1973)	17
1.38	Quality Assurance Requirements for Packaging, Shipping, Receiving, Storage, and Handling of Items for Water-Cooled Nuclear Power Plants (Rev. 2, May 1977)	17
1.39	Housekeeping Requirements for Water-Cooled Nuclear Power Plants (Rev. 2, September 1977)	17

Criteria Section	Referenced Criteria	AP1000 Position	Clarification/Summary Description of Exceptions
Reg. Guide 1.14, Rev. 1, 8/75 – Reactor Coolant Pump Flywheel Integrity			
1.a	ASTM A.20	Exception	The flywheel is made of a bi-metallic design. Heavy alloy segments are fitted to a stainless steel hub and~~, if necessary,~~ held in place by a retaining ring. Therefore, the specific guidelines in this section are not directly applicable to the AP1000.
1.b		Exception	Fracture toughness and tensile properties are checked for components that are required for structural integrity of the bi-metallic flywheel.
1.c		N/A	This guideline is not applicable to the flywheel assembly. Therefore, the guideline is not applicable to the AP1000 reactor coolant pump.
1.d		Conforms	The components of the flywheel that are relied upon for structural integrity require no welding.
2.a-b		Conforms	
2.c-e	ASME Code, Section III	Exception	The limits and methods of ASME Code, Section III, Paragraph F-1331.1(b), (replacement for Paragraph F-1323.1) are not directly applicable to the flywheel assembly. The calculated stress levels in the flywheel are evaluated against the ASME Code, Section III, Subsection NG stress limits used as guidelines and the recommended stress limits in Positions 4.a and 4.c of the Standard Review Plan 5.4.1.1.
2.f		Exception	The calculated stress levels in the flywheel satisfy the ASME Code, Section III, Subsection NG stress limits used as guidelines and the recommended stress limits in Position 4.a of the Standard Review Plan 5.4.1.1.
2.g		Conforms	
3		Conforms	
4.a	ASME Code, Section III, NB-2545 or NB-2546, NB-2540, NB-2530	Exception	The inspections and guidelines referenced in the regulatory guide were developed for steel flywheels in shaft seal pumps. The paragraphs of Subsection NB referenced in the regulatory guide apply only to forged and plate steel components. The bi-metallic flywheel design will be manufactured using multiple processes and materials. In accordance with the regulatory guide, each structural component of the bi-metallic flywheel

NRC 216

LIST OF TABLES

Table No.	Title	Page
2-1	Site Parameters (Sheets 1 – 4)	2-19
NRC 226 2.5-1	Limits of Acceptable Settlement Without Additional Evaluation	2-25

2.5.2 Vibratory Ground Motion

The AP1000 is designed for a safe shutdown earthquake (SSE) defined by a peak ground acceleration (PGA) of 0.30g and the design response spectra specified in subsection 3.7.1.1, and Figures 3.7.1-1 and 3.7.1-2. The AP1000 certified seismic design response spectra (CSDRS) were developed using the Regulatory Guide 1.60 response spectra as the base and modified to include additional high frequency amplification at a control point at 25 Hz. The peak ground accelerations in the two horizontal and the vertical directions are equal.

NRC 218

The AP1000 is also evaluated for a safe shutdown earthquake (SSE) defined by a peak ground acceleration (PGA) of 0.30g and the design response spectra specified in Appendix 3I, and Figures 3I.1-1 and 3I.1-2. These design response spectra are applicable to certain east coast rock sites.

2.5.2.1 Combined License Seismic and Tectonic Characteristics Information

Combined License applicants referencing the AP1000 certified design will address the following site-specific information related to the vibratory ground motion aspects of the site and region:

- Seismicity
- Geologic and tectonic characteristics of site and region
- Correlation of earthquake activity with seismic sources
- Probabilistic seismic hazard analysis and controlling earthquakes
- Seismic wave transmission characteristics of the site
- SSE ground motion

The site-specific ground motion response spectra (GMRS) are determined in the free-field on the ground surface. For sites with soil layers that will be completely excavated to expose competent material, the GMRS is specified on an outcrop or a hypothetical outcrop that will exist after excavation. Motions at this hypothetical outcrop are developed as a free-surface motion, not as an in-column motion. Competent material may be defined as in-situ material having a shear wave velocity equal to or greater than 1000 fps. The Combined License applicant must demonstrate that the proposed site meets the following requirements:

1. The free field peak ground acceleration at the finished grade level is less than or equal to a 0.30g SSE.

2. The site-specific ground motion response spectra (GMRS) at the finished grade level in the free-field are less than or equal to the AP1000 certified seismic design spectra (CSDRS) given in Figures 3.7.1-1 and 3.7.1-2.

3. In lieu of (1) and (2) above, for a site where the nuclear island is founded on competent rock with shear wave velocity greater than 8,000 feet per second, the site-specific ground motion may be defined at the foundation level as the foundation input response spectra~~um~~ (FIRS) and shown to be less than or equal to the CSDRS given in Figures 3.7.1-1 and 3.7.1-2.

NRC 218

NRC 218

Containment internal structures at elevation of reactor vessel support	Figure 3G.4-5X to 3G.4-5Z
Containment operating floor	Figure 3G.4-6X to 3G.4-6Z
Auxiliary building NE corner at elevation 116′-6″~~117′6″~~	Figure 3G.4-7X to 3G.4-7Z
Shield building at fuel building roof	Figure 3G.4-8X to 3G.4-8Z
Shield building roof	Figure 3G.4-9X to 3G.4-9Z
Steel containment vessel at polar crane support	Figure 3G.4-10X to 3G.4-10Z

Site-specific soil structure interaction analyses are performed using the 3D SASSI models described in Appendix 3G. The site-specific soil structure interaction analyses use the site-specific soil conditions (including variation in soil properties in accordance with Standard Review Plan 3.7.2). The three components of the site-specific ground motion time history must satisfy the regulatory requirements for statistical independence and enveloping of the site design spectra at 5% damping. Floor response spectra determined from the site-specific analyses should be compared against the design basis of the AP1000 described above. These evaluations and comparisons will be provided and reviewed as part of the Combined License application.

If the site-specific spectra at foundation level at a rock site exceed the response spectra in Figures 3I.1-1 and 3I.1-2 at any frequency, a site-specific evaluation can be performed similar to that described in Appendix 3I.

2.5.3 Surface Faulting Combined License Information

Combined License applicants referencing the AP1000 certified design will address the following surface and subsurface geological, seismological, and geophysical information related to the potential for surface or near-surface faulting affecting the site:

- Geological, seismological, and geophysical investigations
- Geological evidence, or absence of evidence, for surface deformation
- Correlation of earthquakes with capable tectonic sources
- Ages of most recent deformation
- Relationship of tectonic structures in the site area to regional tectonic structures
- Characterization of capable tectonic sources
- Designation of zones of quaternary deformation in the site region
- Potential for surface tectonic deformation at the site

2.5.4 Stability and Uniformity of Subsurface Materials and Foundations

Combined License applicants referencing the AP1000 certified design will address the following site-specific information related to the stability and uniformity of subsurface materials and foundations.

- Excavation
- Bearing capacity

Containment internal structures at elevation of reactor vessel support	Figure 3G.4-5
Containment operating floor	Figure 3G.4-6
Auxiliary building NE~~north east~~ corner at elevation 117′6″~~135′~~	Figure 3G.4-7
Shield building at fuel building roof	Figure 3G.4-8
Shield building roof	Figure 3G.4-9
Steel containment vessel at polar crane support	Figure 3G.4-10

NRC 046

Site-specific soil structure interaction analyses are performed using the 3D SASSI models described in Appendix 3G. The site-specific soil structure interaction analyses use the site-specific soil conditions (including variation in soil properties in accordance with Standard Review Plan 3.7.2). The three components of the site-specific ground motion time history must satisfy the regulatory requirements for statistical independence and enveloping of the site design spectra at 5% damping. Floor response spectra determined from the site-specific analyses should be~~are~~ compared against the design basis of the AP1000 described above. These evaluations and comparisons will be provided and reviewed as part of the Combined License application.

NRC 046

If the site-specific spectra at foundation level at a rock site exceed the response spectra in Figures 3I.1-1 and 3I.1-2 at any frequency, a site-specific evaluation can be performed similar to that described in Appendix 3I.

TR-134, Rev 0

2.5.3 Surface Faulting Combined License Information

Combined License applicants referencing the AP1000 certified design will address the following surface and subsurface geological, seismological, and geophysical information related to the potential for surface or near-surface faulting affecting the site:

- Geological, seismological, and geophysical investigations
- Geological evidence, or absence of evidence, for surface deformation
- Correlation of earthquakes with capable tectonic sources
- Ages of most recent deformation
- Relationship of tectonic structures in the site area to regional tectonic structures
- Characterization of capable tectonic sources
- Designation of zones of quaternary deformation in the site region
- Potential for surface tectonic deformation at the site

2.5.4 Stability and Uniformity of Subsurface Materials and Foundations

Combined License applicants referencing the AP1000 certified design will address the following site-specific information related to the stability and uniformity of subsurface materials and foundations.

- Excavation

- Settlement
- Liquefaction

2.5.4.1 Excavation

Excavation for the nuclear island structures below grade may use either a sloping excavation or a vertical face as described in subsequent paragraphs. If backfill is to be placed adjacent to the exterior walls of the nuclear island, the Combined License applicant will provide information on the properties of backfill and its compaction requirements as described in subsection 2.5.4.6.3 and will evaluate its properties against those used in the seismic analyses described in subsection 3.7.2.

NRC 227

For the vertical face alternative, excavation in soil for the nuclear island structures below grade will establish a vertical face with lateral support of the adjoining undisturbed soil or rock. This vertical face will be covered by a waterproof membrane as described in subsection 3.4.1.1.1.1 and is used as the outside form for the exterior walls below grade of the nuclear island. ~~One a~~Alternative methods include~~is to use a~~ soil nailing and mechanically stabilized earth (MSE) walls~~method~~.

2.5.4.1.1 Vertical Face Using Soil Nails

Soil nailing is a method of retaining earth in-situ. As the nuclear island excavation progresses vertically downward, holes are drilled horizontally into the adjoining undisturbed soil, a metal rod is inserted into the hole, and grout is pumped into each hole to fill the hole and to anchor the "nail" rod.

NRC 227

As each increment of the nuclear island excavation is completed, nominal eight to ten inch diameter holes are drilled horizontally through the vertical face of the excavation into adjacent undisturbed soil. These "nail" holes, spaced horizontally and vertically on five to six feet centers, are drilled slightly downward to the horizontal. A "nail", normally a metal bar/rod, is center located for the full length of the hole. The nominal length of soil nails is 60 percent to 70 percent of the wall height, depending upon soil conditions. The hole is filled with grout to anchor the rod to the soil. A metal face plate is installed on the exposed end of the rod at the excavated wall vertical surface. Welded wire mesh is hung on the wall surface for wall reinforcement and secured to the soil nail face plates for anchorage. A 4,000 psi to 5,000 psi non-expansive pea gravel shotcrete mix is blown onto the wire mesh to form a nominal four to six inch thick soil retaining wall. Installation of the soil retaining wall closely follows the progress of the excavation and is from the top down, with each wire mesh-reinforced, shotcreted wall section being supported by the soil "nails" and the preceding elevations of soil nailed wall placements.~~ The shotcrete contains a crystalline waterproofing material as described in subsection 3.4.1.1.1.~~

Soil nailing as a method of soil retention has been successfully used on excavations up to 55 feet deep on projects in the U.S. Soils have been retained for up to 90 feet in Europe. The state of California CALTRANS uses soil nailing extensively for excavations and soil retention installations. Soil nailing design and installation has a successful history of application which is evidenced by its excellent safety record.

The soil nailing method produces a vertical surface down to the bottom of the excavation and is used as the outside forms for the exterior walls below grade of the nuclear island. Concrete is placed directly against the vertical concrete surface of the excavation.

For ~~excavation in rock and for~~ methods of soil retention other than soil nailing, such as for excavation in rock, four to six inches of shotcrete are blown on to the vertical surface. The concrete for the exterior walls is placed against the shotcrete. ~~The shotcrete contains a crystalline waterproofing material as described in subsection 3.4.1.1.1.~~

2.5.4.1.2 Vertical Face Using Mechanically Stabilized Earth Walls

Mechanically stabilized earth walls (MSE) are flexible retaining wall systems that use strip, grid, or sheet type of tensile reinforcements in the soil mass, and a discrete modular pre-cast concrete, which is vertical. MSE walls function like, and are generally more economical than, conventional retaining walls. The tensile strength of the reinforcements and the slip at the interface of the reinforcement and the soil provide great internal stability to MSE walls. These walls may be used where the side soils have to be removed or the grade elevation needs to be raised. The walls and backfill are placed prior to construction of the nuclear island.

NRC 227

2.5.4.1.3 Mudmat

The mudmat provides a working surface prior to initiating the placement of reinforcement for the foundation mat structural concrete. The lower and upper mud mats are as follows:

- Lower mud mat – (minimum 6 inches thick) of un-reinforced concrete, with a minimum compressive strength of 2,500 psi, as discussed in subsection 2.5.4.6.3. The lower mud mat will be used as the final dental concrete layer on the underlying foundation media.

- Upper mud mat – (minimum 6 inches thick) of thick, high paste un-reinforced concrete with a minimum compressive strength of 2,500 psi. This upper mud mat will support the chairs that, in turn, support the reinforcing steel.

The waterproofing system alternatives are described in subsection 3.4.1.1.1.1.

2.5.4.2 Bearing Capacity

The maximum bearing reaction determined from the analyses described in Appendix 3G is less than 35,000 lb/ft^2 under all combined loads, including the safe shutdown earthquake. These analyses use uniform soil springs below the basemat. The maximum demand of 35 ksf occurs under the west edge of the shield building and is primarily due to the response to the east-west component of the earthquake. The east edge of the nuclear island lifts off the soil. The Combined License applicant will verify that the site-specific allowable soil bearing capacities for static and dynamic loads at the site will exceed this demand. The evaluation may be limited to response in the east-west direction since the bearing demand is lower in the north-south direction.

NRC 224

NRC 224

The evaluation of the allowable capacity of the soil is based on the properties of the underlying materials (see subsection 2.5.4.5.2), including appropriate laboratory test data to evaluate strength, and considering local site effects, such as fracture spacing, variability in properties, and evidence

of shear zones. The allowable bearing capacity should provide a factor of safety appropriate for the design load combination, including safe shutdown earthquake loads.

If the shear wave velocity or the allowable bearing capacity is outside the range evaluated for AP1000 design certification, a site-specific evaluation can be performed using the AP1000 basemat model and methodology described in subsection 3.8.5. The safe shutdown earthquake loads are those from the AP1000 analyses described therein. Alternatively, bearing pressures may be determined from a site-specific analysis using site-specific inputs as described in subsection 2.5.2.3. For the site to be acceptable, the bearing pressures from the site-specific analyses, including static and dynamic loads, need to be less than the capacity of each portion of the basemat.

2.5.4.3 Settlement

NRC 226

The Combined License applicant will address short-term (elastic) and long-term (heave and consolidation) settlement for soil sites for the history of loads imposed on the nuclear island foundation and adjacent buildings consistent with the construction sequence. The resulting time-history of settlements includes construction activities such as dewatering, excavation, bearing surface preparation, placement of the basemat, and construction of the superstructure. The settlement under the building~~nuclear island~~ footprint is represented in the distribution of subgrade stiffness.

NRC 226

NRC 226

The AP1000 does not rely on structures, systems, or components located outside the nuclear island to provide safety-related functions. Differential settlement between the nuclear island foundation and the foundations of adjacent buildings does not have an adverse effect on the safety-related functions of structures, systems, and components. Differential settlement under the nuclear island foundation could cause the basemat and buildings to tilt. Much of this settlement occurs during civil construction prior to final installation of the equipment. Differential settlement of a few inches across the width of the nuclear island would not have an adverse effect on the safety-related functions of structures, systems, and components. Table 2.5-1 provides guidance to the Combined License applicant on predictions of absolute and differential settlement that are acceptable without further evaluation. When the predicted settlement exceeds these values, the Combine License applicant will describe any special construction provisions to accommodate the predicted settlement.

2.5.4.4 Liquefaction

The Combined License applicant will demonstrate that the potential for liquefaction is negligible.

2.5.4.5 Subsurface Uniformity

Soil structure interaction and foundation design are a function of the uniformity of the soil or rock below foundation. Although the design and analysis of the AP1000 is based on soil or rock conditions with uniform properties within horizontal layers, it includes provisions and design margins to accommodate many non-uniform sites. This subsection identifies the requirements for site investigation that may be used to demonstrate that:

2.5.4.6.1 Site and Structures – Site-specific information regarding the underlying site conditions and geologic features will be addressed. This information will include site topographical features, as well as the locations of seismic Category I structures.

2.5.4.6.2 The Combined License applicant will establish the properties of the foundation soils to be within the range considered for design of the nuclear island basemat.

Properties of Underlying Materials – A determination of the static and dynamic engineering properties of foundation soils and rocks in the site area will be addressed. This information will include a discussion of the type, quantity, extent, and purpose of field explorations, as well as logs of borings and test pits. Results of field plate load tests, field permeability tests, and other special field tests (e.g., bore-hole extensometer or pressuremeter tests) will also be provided. Results of geophysical surveys will be presented in tables and profiles. Data will be provided pertaining to site-specific soil layers (including their thicknesses, densities, moduli, and Poisson's ratios) between the basemat and the underlying rock stratum. Plot plans and profiles of site explorations will be provided.

Properties of Materials Adjacent to Nuclear Island Exterior Walls – A determination of the static and dynamic engineering properties of the surrounding soil will be made to demonstrate they are competent and provide passive earth pressures greater than or equal to those used in the seismic stability evaluation for sliding of the nuclear island. Seismic stability requirements are satisfied if the soil layers below and adjacent to the nuclear island foundation are composed predominantly of rock, or sand and rock (gravel), or sands that can be classified as medium to dense (standard penetration test having greater than 10 blows per foot). If the soil below and adjacent to the exterior walls is made up of clay, sand and clay, or other types of soil other than those classified above as competent, then the Combined License applicant will evaluate the seismic stability against sliding as described in subsection 3.8.5.5.3 using the site-specific soil properties.

Laboratory Investigations of Underlying Materials – Information about the number and type of laboratory tests and the location of samples used to investigate underlying materials will be provided. Discussion of the results of laboratory tests on disturbed and undisturbed soil and rock samples obtained from field investigations will be provided.

2.5.4.6.3 Excavation and Backfill – Information concerning the extent (horizontal and vertical) of seismic Category I excavations, fills, and slopes, if any will be addressed. The sources, quantities, and static and dynamic engineering properties of borrow materials will be described in the site-specific application. The compaction requirements, results of field compaction tests, and fill material properties (such as moisture content, density, permeability, compressibility, and gradation) will also be provided. Information will be provided concerning the specific soil retention system, for example, the soil nailing system or mechanically stabilized earth walls, including the length and size of the soil nails or tension reinforcement, which is based on actual soil conditions and applied construction surcharge loads. If backfill is to be placed adjacent to the exterior walls of the nuclear island, information will be provided concerning compaction of the backfill and any additional loads on the exterior walls of the nuclear island~~. Information will also be provided on the waterproofing system along the vertical face and the mudmat. Information will be provided on the mudmat to demonstrate its ability to resist the structural bearing and shear loads described in subsection 2.5.4.2. The maximum bearing pressure is 240 psi. The mudmat may be designed as~~

NRC 227

NRC 227

NRC 227

~~structural plain concrete in accordance with ACI 318-02 (Reference 1). This requires the specified concrete compressive strength to be no less than 2500 psi. The commentary states this requirement is imposed in the code because "lean concrete mixtures may not produce adequately homogeneous material or well formed surfaces." If the Combined License applicant proposes to use a concrete with strength less than 2500 psi, the applicant must demonstrate that the mix will result in an acceptable homogeneous material.~~

2.5.4.6.4 Ground Water Conditions – Groundwater conditions will be described relative to the foundation stability of the safety-related structures at the site. The soil properties of the various layers under possible groundwater conditions during the life of the plant will be compared to the range of values assumed in the standard design in Table 2-1.

2.5.4.6.5 Liquefaction Potential – Soils under and around seismic Category I structures will be evaluated for liquefaction potential for the site specific SSE ground motion. This should include justification of the selection of the soil properties, as well as the magnitude, duration, and number of excitation cycles of the earthquake used in the liquefaction potential evaluation (e.g., laboratory tests, field tests, and published data). Liquefaction potential will also be evaluated to address seismic margin.

2.5.4.6.6 Bearing Capacity – The Combined License applicant will verify that the site-specific allowable soil bearing capacities for static and dynamic loads are equal to or greater than the values documented in Table 2-1, or will provide a site-specific evaluation as described in subsection 2.5.4.2. The acceptance criteria for this evaluation are those of Standard Review Plan 2.5.4 as follows:

- The static and dynamic loads, and the stresses and strains induced in the soil surrounding and underlying the nuclear island, are conservatively and realistically evaluated.
- The consequences of the induced soil stresses and strains, as they influence the soil surrounding and underlying the nuclear island, have been conservatively assessed.

2.5.4.6.7 Earth Pressures – The Combined License applicant will describe the design for static and dynamic lateral earth pressures and hydrostatic groundwater pressures acting on plant safety-related facilities using soil parameters as evaluated in previous subsections.

2.5.4.6.8 Soil Properties for Seismic Analysis of Buried Pipes – The AP1000 does not utilize safety related buried piping. No additional information is required on soil properties.

2.5.4.6.9 Static and Dynamic Stability of Facilities – Soil characteristics affecting the stability of the nuclear island will be addressed including foundation rebound, settlement, and differential settlement.

2.5.4.6.10 Subsurface Instrumentation – Data will be provided on instrumentation, if any, proposed for monitoring the performance of the foundations of the nuclear island. This will specify the type, location, and purpose of each instrument, as well as significant details of installation methods. The location and installation procedures for permanent benchmarks and markers for monitoring the settlement will be addressed.

NRC 226

NRC 226

2.5.4.6.11 Settlement of Nuclear Island – Data will be provided on short-term (elastic) and long-term (heave and consolidation) settlement for soil sites for the history of loads imposed on the nuclear island foundation and adjacent buildings consistent with the construction sequence. The resulting time-history of settlements includes construction activities such as dewatering, excavation, bearing surface preparation, placement of the basemat, and construction of the superstructure. Special construction requirements will be described, if required, to accommodate settlement predicted to exceed the values shown in Table 2.5-1.

2.5.5 Combined License Information for Stability of Slopes

Combined License applicants referencing the AP1000 design will address site-specific information about the static and dynamic stability of soil and rock slopes, the failure of which could adversely affect the nuclear island.

2.5.6 Combined License Information for Embankments and Dams

Combined License applicants referencing the AP1000 design will address site-specific information about the static and dynamic stability of embankments and dams, the failure of which could adversely affect the nuclear island.

References

1. American Concrete Institute (ACI), "Building Code Requirements for Structural Concrete," ACI 318-02.

2. NUREG/CR-0693, "Seismic Input and Soil Structure Interaction," February 1979.

Table 2-1 (Sheet 1 of 4)

SITE PARAMETERS

	Air Temperature	
NRC 264	Maximum Safety [a]	115°F dry bulb/86.1~~80~~°F coincident wet bulb 86.1~~85.5~~°F wet bulb (noncoincident)[g]
	Minimum Safety [a]	-40°F
NRC 264	Maximum Normal [b]	101~~0~~°F dry bulb/80.1°F coincident wet bulb 80.1°F wet bulb (noncoincident) [d]
	Minimum Normal [b]	-10°F
	Wind Speed	
	Operating Basis	145 mph (3 second gust); importance factor 1.15 (safety), 1.0 (nonsafety); exposure C; topographic factor 1.0
	Tornado	300 mph
	Seismic	
	SSE	0.30g peak ground acceleration [c][f]
	Fault Displacement Potential	Negligible
	Soil	
	Average Allowable Static Bearing Capacity	Greater than or equal to 8,600 lb/ft^2 over the footprint of the nuclear island at its excavation depth
NRC 224	Maximum Allowable Dynamic Bearing Capacity for Normal Plus SSE	Greater than or equal to 35,000 lb/ft^2 at the edge of the nuclear island at its excavation depth, or Site-specific analyses demonstrate factor of safety appropriate for normal plus safe shutdown earthquake loads
	Shear Wave Velocity	Greater than or equal to 1,000 ft/sec based on low-strain best-estimate soil properties over the footprint of the nuclear island at its excavation depth

Table 2-1 (Sheet 3 of 4)

SITE PARAMETERS

Missiles	
Tornado	4000 - lb automobile at 105 mph horizontal, 74 mph vertical 275 - lb, 8 in. shell at 105 mph horizontal, 74 mph vertical 1 inch diameter steel ball at 105 mph horizontal and vertical
Flood Level	Less than plant elevation 100′
Ground Water Level	Less than plant elevation 98′
Plant Grade Elevation	Less than plant elevation 100′ except for portion at a higher elevation adjacent to the annex building
Precipitation	
Rain	20.7~~19.4~~ in./hr [1-hr 1-mi^2 PMP]~~(6.3 in./5 min)~~
Snow/Ice	75 pounds per square foot on ground with exposure factor of 1.0 and importance factors of 1.2 (safety) and 1.0 (non-safety)
Atmospheric Dispersion Values - χ/Q[(e)]	
Site boundary (0-2 hr)	$\leq 1.0 \times 10^{-3}$ sec/m^3
Site boundary (annual average)	$\leq 2.0 \times 10^{-5}$ sec/m^3
Low population zone boundary	
0 - 8 hr	$\leq 5.0 \times 10^{-4}$ sec/m^3
8 - 24 hr	$\leq 3.0 \times 10^{-4}$ sec/m^3
24 - 96 hr	$\leq 1.5 \times 10^{-4}$ sec/m^3
96 - 720 hr	$\leq 8.0 \times 10^{-5}$ sec/m^3
Population Distribution	
Exclusion area (site)	0.5 mi

NRC 266

Notes:

(a) Maximum and minimum safety values are based on historical data and exclude peaks of less than 2 hours duration.

(b) Maximum and minimum normal values are the 1 percent exceedance magnitudes.

(c) With ground response spectra as given in Figures 3.7.1-1 and 3.7.1-2. Seismic input is defined at finished grade except for sites where the nuclear island is founded on hard rock.

(d) The noncoincident wet bulb temperature is applicable to the cooling tower only.

(e) For AP1000, the terms “site boundary” and “exclusion area boundary” are used interchangeably. Thus, the χ/Q specified for the site boundary applies whenever a discussion refers to the exclusion area boundary.

(f) Sites that fall within the hard rock high frequency GMRS given in Figure 3I.1-1 and Figure 3I.1-2 are acceptable.

NRC 264

(g) The containment pressure response analysis is based on a conservative set of dry-bulb and wet-bulb temperatures. These results envelop any conditions where the dry-bulb temperature is 115°F or less and wet-bulb temperature of less than or equal to 86.1°F.

NRC 226

Table 2.5-1

LIMITS OF ACCEPTABLE SETTLEMENT WITHOUT ADDITIONAL EVALUATION

Differential Across Nuclear Island Foundation Mat	Total for Nuclear Island Foundation Mat	Differential Between Nuclear Island and Turbine Building	Differential Between Nuclear Island and Other Buildings
1/2 inch 50 ft	3 inches	1/2 inch	1/2 inch

LIST OF FIGURES

Figure No.	Title	Page
3.3-1	Velocity Pressure Variation with Radius from Center of Tornado	3.3-6
3.4-1	Nuclear Island Waterproofing MSE Wall Alternate	3.4-24
3.4-2	Nuclear Island Waterproofing Step Back Alternate	3.4-25
3.4-3	Nuclear Island Waterproofing Soil Nail Alternate	3.4-26
NRC 227 3.4-4	Membrane Corner Detail at Basemat and Exterior Wall	3.4-28
3.6-1	Typical U-Bar Restraint	3.6-53
3.6-2	Typical Energy Absorbing Material Restraint	3.6-54
3.6-3	Terminal Ends Definitions	3.6-55
3.7.1-1	Horizontal Design Response Spectra Safe Shutdown Earthquake	3.7-61
3.7.1-2	Vertical Design Response Spectra Safe Shutdown Earthquake	3.7-62
3.7.1-3	Design Horizontal Time History, "H1" Acceleration, Velocity & Displacement Plots	3.7-63
3.7.1-4	Design Horizontal Time History, "H2" Acceleration, Velocity & Displacement Plots	3.7-64
3.7.1-5	Design Vertical Time History Acceleration, Velocity & Displacement Plots	3.7-65
3.7.1-6	Acceleration Response Spectra of Design Horizontal Time History, "H1"	3.7-66
3.7.1-7	Acceleration Response Spectra of Design Horizontal Time History, "H2"	3.7-67
3.7.1-8	Acceleration Response Spectra of Design Vertical Time History	3.7-68
3.7.1-9	Minimum Power Spectral Density Curve (Normalized to 0.3g)	3.7-69
3.7.1-10	Power Spectral Density of Design Horizontal Time History, "H1"	3.7-70
3.7.1-11	Power Spectral Density of Design Horizontal Time History, "H2"	3.7-71
3.7.1-12	Power Spectral Density of Design Vertical Time History	3.7-72
3.7.1-13	Damping Values for Cable Trays & Supports	3.7-73
3.7.1-14	Nuclear Island Structures Dimensions	3.7-74
3.7.1-15	Strain Dependent Properties of Rock Material (Ref. 37)	3.7-75
3.7.1-16	Strain Dependent Properties of Soil Material (Ref. 38)	3.7-76
3.7.1-17	Generic Soil Profiles	3.7-77
3.7.2-1	Not Used	
3.7.2-2	Not Used	
3.7.2-3	Not Used	
3.7.2-4	Not Used	
3.7.2-5	Not Used	
3.7.2-6	Not Used	
3.7.2-7	Not Used	
3.7.2-8	Not Used	
3.7.2-9	Not Used	
3.7.2-10	Not Used	
3.7.2-11	Not Used	
3.7.2-12	Nuclear Island Key Structural Dimensions Plan at El. 66′-6″ (Sheet 1)	3.7-79
3.7.2-12	Nuclear Island Key Structural Dimensions Plan at El. 82′-6″ (Sheet 2)	3.7-81
3.7.2-12	Nuclear Island Key Structural Dimensions Plan at El. 100′-0″ & 107′-2″ (Sheet 3)	3.7-83
3.7.2-12	Nuclear Island Key Structural Dimensions Plan at El. 117′-6″ (Sheet 4)	3.7-85

to. Sensing lines connected to the reactor coolant system pressure boundary are Class B if a suitable flow restrictor is provided.

The parts of the sensor, outside the pressure boundary, are designated Class C (1E) if they provide a safety-related function per subsection 3.2.2.1. They are Class D if the instrument supports Class D functions per subsection 3.2.2.6. Otherwise the parts are Class E.

3.2.2.9 Electrical Classifications

Safety-related electrical equipment is equipment Class C, as outlined in subsection 3.2.2.5, and is constructed to IEEE standards for Class 1E. The nonsafety-related electrical equipment and instrumentation is constructed to standards including non-Class 1E IEEE standards and National Electrical Manufacturers Association (NEMA) standards. Safety-related electrical equipment and instrumentation is identified in Section 3.11.

3.2.3 Inspection Requirements

Safety-related structures, systems, and components built to the requirements of the ASME Code, Section III, are required by 10 CFR 50.55a to have in-service inspections. The requirements of the in-service inspection program for ASME Code, Section III structures, systems, and components are found in Section XI of the ASME Code.

The following ASME standards apply to safety-related structures, systems, and components:

NRC 255

- Pumps (Class A, B, C) – ASME OM Code, ~~Section XI,~~ Subsection ISTB~~s IWB, IWC, and IWD~~
- Valves (Class A, B, C) – ASME OM Code, ~~Section XI,~~ Subsection ISTC~~s IWB, IWC, and IWD~~
- Equipment supports (Class A, B, C) – ASME Code, Section XI, Subsection IWF
- Metal containments and vessels – ASME Code, Section XI, Subsection IWE
- Other Class A components such as pipes and tanks – ASME Code, Section XI, Subsection IWB
- Other Class B components such as pipes and tanks – ASME Code, Section XI, Subsection IWC
- Other Class C components such as pipes and tanks – ASME Code, Section XI, Subsection IWD.

The inspection requirements, if applicable, for Class D structures, systems, and components are established by the designer for each structure, system, and component. These inspection requirements are developed so that the reliability of the structures, systems, and components is not degraded. The inspection requirements are included in the administratively controlled inspection or maintenance plans.

to. Sensing lines connected to the reactor coolant system pressure boundary are Class B if a suitable flow restrictor is provided.

The parts of the sensor, outside the pressure boundary, are designated Class C (1E) if they provide a safety-related function per subsection 3.2.2.1. They are Class D if the instrument supports Class D functions per subsection 3.2.2.6. Otherwise the parts are Class E.

3.2.2.9 Electrical Classifications

Safety-related electrical equipment is equipment Class C, as outlined in subsection 3.2.2.5, and is constructed to IEEE standards for Class 1E. The nonsafety-related electrical equipment and instrumentation is constructed to standards including non-Class 1E IEEE standards and National Electrical Manufacturers Association (NEMA) standards. Safety-related electrical equipment and instrumentation is identified in Section 3.11.

3.2.3 Inspection Requirements

Safety-related structures, systems, and components built to the requirements of the ASME Code, Section III, are required by 10 CFR 50.55a to have in-service inspections. The requirements of the in-service inspection program for ASME Code, Section III structures, systems, and components are found in Section XI of the ASME Code.

The following ASME standards apply to safety-related structures, systems, and components:

NRC 117

- Pumps (Class A, B, C) – ASME Code, Section XI, Subsections IWB, IWC, and IWD~~/ANSI OM Part 6~~

NRC 117

- Valves (Class A, B, C) – ASME Code, Section XI, Subsections IWB, IWC, and IWD~~/ANSI OM Part 10~~
- Equipment supports (Class A, B, C) – ASME Code, Section XI, Subsection IWF
- Metal containments and vessels – ASME Code, Section XI, Subsection IWE
- Other Class A components such as pipes and tanks – ASME Code, Section XI, Subsection IWB
- Other Class B components such as pipes and tanks – ASME Code, Section XI, Subsection IWC
- Other Class C components such as pipes and tanks – ASME Code, Section XI, Subsection IWD.

The inspection requirements, if applicable, for Class D structures, systems, and components are established by the designer for each structure, system, and component. These inspection requirements are developed so that the reliability of the structures, systems, and components is not degraded. The inspection requirements are included in the administratively controlled inspection or maintenance plans.

TR-134, Rev 0

Table 3.2-3 (Sheet 11 of 65)

AP1000 CLASSIFICATION OF MECHANICAL AND FLUID SYSTEMS, COMPONENTS, AND EQUIPMENT

Tag Number	Description	AP1000 Class	Seismic Category	Principal Construction Code	Comments
Passive Containment Cooling System (Continued)					
PCS-PL-V040	Recirculation Pump Suction from PCCAWST Isolation Valve	D	NS	ANSI 16.34	Equipment Anchorage is Seismic Category II
PCS-PL-V041	PCCAWST Recirculation Return Line Isolation Valve	D	NS	ANSI 16.34	Equipment Anchorage is Seismic Category II
PCS-PL-V042	PCCWST Long-Term Makeup Isolation Drain Valve	C	I	ASME III-3	PCS-PL-V043
PCS-PL-V043	PCCAWST Recirculation Return Line Drain Isolation Valve	D	NS	ANSI 16.34	Equipment Anchorage is Seismic Category II
PCS-PL-V044	PCCWST Long-Term Makeup Isolation Valve	C	I	ASME III-3	
PCS-PL-V045	Emergency Makeup to the Spent Fuel Pool Isolation Valve	C	I	ASME III-3	
PCS-PL-V046	PCCWST Recirculation Return Isolation Valve	C	I	ASME III-3	
PCS-PL-V048	Recirculation Pump Fire Suction Isolation Valve	D	NS	ANSI 16.34	Seismically analyzed for operability
PCS-PL-V049	Emergency Makeup to the Spent Fuel Pool Drain Isolation Valve	C	I	ASME III-3	
PCS-PL-V050	Spent Fuel Pool Long Term Makeup Isolation Valve	C	I	ASME III-3	
PCS-PL-V051	Spent Fuel Pool Emergency Makeup Lower Isolation	C	I	ASME III-3	
NRC 234 PCS-PL-V052	Spent Fuel Spray Isolation	C	I	ASME III-3	

based on the radius of the shield building and the parameters of the tornado defined in subsection 3.3.2.1. The differential pressure is used with the pressure loss coefficients in the air flow path to determine pressures throughout the flow path.

The development of loads on the air baffle due to the design wind and tornado (W_w) are described in the test reports (References 3, 4, and 5). Models of the AP600 were tested in a wind tunnel and subjected to representative wind profiles. Pressures were measured on each side of the baffle, and the differential pressures were normalized to the input wind velocity. The pressure coefficients are applied to the effective dynamic pressure for the design wind and the tornado to obtain the wind loads across the baffle. The tornado wind is specified to be constant with height. The tornado loads calculated for the AP600 are applicable to the AP1000. The AP1000 configuration is similar to the AP600. The height of the shield building roof increases by 20′ 6"; the exterior diameter of the passive containment cooling storage tank increases from 80′ 0" to 89′ 0". The pressure coefficients measured in the AP600 tests are not significantly affected by these changes in geometry.

Wind conditions result in a pressure reduction in the annulus between the shield building and the containment vessel as well as above the containment dome. This reduced pressure is equivalent to an increase in containment internal pressure and is within the normal operating range for containment pressure (-0.2 to 1.0 psig).

Wind conditions result in a small wind load across the containment vessel. This is maximum opposite the air intakes where positive pressures occur on the windward side and negative pressures occur on the leeward side. Lateral loads on the containment vessel are developed in Reference 5.

3.3.3 Combined License Information

The Combined License information requested in this subsection has been partially addressed in APP-GW-GLR-020 (Reference 7). The information item completion activities required of the Combined License applicant are defined in APP-GW-GLR-020. These activities include development of site-specific parameters and verification of bounding conditions, site arrangement, and building construction. Specifically, the information that the applicant must evaluate is the following, demonstrating that any exceedances or differences do not compromise the safety of the plant:

NRC 258

- Site parameters for wind and tornado showing that the site satisfies the AP1000 site interface criteria for the wind and tornado conditions. If there are exceedances, they must be discussed and shown acceptable.

- Provide plant specific site plan and discuss any differences between the plant specific site plan and the typical site plan shown in Figure 1.2-2 of the AP1000 DCD Section 1.2.

- Verification that there are no other structures adjacent to the nuclear island other than: turbine building; annex building; radwaste building; and passive containment cooling ancillary water storage tank. If there are, then the effect of these structures on the AP1000 nuclear island must be discussed.

- Show that missiles caused by external events separate from the tornado have energies less than the tornado missile spectrum energies that the AP1000 is designed to withstand. If missile energy is greater, evaluate and show that it will not compromise the safety of AP1000 safety-related structures and components.

Completion of these activities by the Combined License applicant will complete the information item.

NRC 258

~~, and the applicable changes are incorporated into the DCD. The work that has been done is summarized in the following paragraph:~~

> ~~Technical Report APP-GW-GLR-020 includes evaluation of generic wind and tornado loadings on structures, discussion of missiles generated by tornadoes and extreme winds, and evaluation of other buildings for collapse and missile generation.~~

~~The information item activities completion activities required of the Combined License applicant are defined in APP-GW-GLR-020. These activities include development of site-specific parameters and verification of bounding conditions, site arrangement, and building construction. Completion of these activities by the Combined License applicant will complete the information item.~~

The following words represent the original Combined License Information item commitment:

> Combined License applicants referencing the AP1000 certified design will address site interface criteria for wind and tornado. The Combined License applicant will ensure that a tornado-initiated failure of structures and components within the Combined License applicant's scope will not compromise the safety of AP1000 safety-related structures and components (see also subsection 3.5.4).

3.3.4 References

1. American Society of Civil Engineers, "Minimum Design Loads for Buildings and Other Structures," ASCE 7-98.

2. ASCE Paper No. 3269, "Wind Forces on Structures," Transactions of the American Society of Civil Engineers, Vol. 126, Part II (1961).

3. WCAP-13323-P and WCAP-13324-NP, "Phase II Wind Tunnel Testing for the Westinghouse AP600 Reactor," August 1992.

4. WCAP-14068-P, "Phase IVA Wind Tunnel Testing for the Westinghouse AP600 Reactor," May, 1994.

5. WCAP-14169-P, "Phase IVA Wind Tunnel Testing for the Westinghouse AP600 Reactor, Supplemental Report," September, 1994.

6. WCAP-13294-P and WCAP-13295-NP, "Phase I Wind Tunnel Testing for the Westinghouse AP600 Reactor," April 1992.

The components that may be potential sources for external flooding are nonsafety-related, nonseismic tanks as shown in DCD Figure 1.2-2:

- Fire water tanks as described in subsection 9.5.1. These two tanks have volumes of approximately 325,000 and 400,000 gallons, and are located at the north end of the turbine building.

- Condensate storage tank as described in subsection 9.2.4. This tank has a volume of approximately 485,000 gallons, and is located at the west side of the turbine building. Water will drain from the tank away from the turbine and auxiliary buildings due to site grading.

- Demineralized water tank as described in subsection 9.2.4. This tank has a volume of approximately 100,000 gallons and is located adjacent to the annex building at elevation 107′-2″. Water will drain from the tank away from the annex building to elevation 100′-0″. Nearby doors lead to areas in the annex building which do not contain safety-related components or systems.

- Boric acid storage tank as described in subsection 9.3.6. This tank has a volume of approximately 70,000 gallons and is located adjacent to the demineralized water storage tank.

- Diesel fuel oil tanks as described in subsection 9.5.4. These two tanks have volumes of approximately 100,000 gallons each. They are located remote from safety-related structures and are provided with dikes to retain leaks and spills.

- Passive containment cooling ancillary water storage tank as described in subsection 6.2.2.3. This tank has a volume of 780,000 gallons and is located at the west side of the auxiliary building. Water will drain from the tank away from the auxiliary building due to site grading.

In addition, failure of the cooling tower or the service water or circulating water piping under the yard could result in a potential flood source. However, these potential sources are located far from safety-related structures and the consequences of a failure in the yard would be enveloped by the analysis described in DCD subsection 10.4.5.

For the AP1000, the 100′-0″ building floor elevations are slightly above the grade elevation. In addition, the slope of the yard grade directs water away from the buildings. Because the probable maximum flood for AP1000 is less than grade elevation, the exterior doors are not required to be watertight for protection from external flooding.

NRC 227

Process piping penetrations through the exterior walls of the nuclear island below grade are embedded in the wall or are welded to a steel sleeve embedded in the wall. There are no access openings or tunnels penetrating the exterior walls of the nuclear island below grade.

The reinforced concrete seismic Category I structures, incorporating the waterproofing and sealing features described above and in subsection 3.4.1.1.1.1, provide hardened protection for safety-related structures, systems, and components as defined in Regulatory Guide 1.59.

3.4.1.1.1.1 Waterproofing

A waterproof membrane or waterproofing system for the seismic Category I structures below grade will be installed as an architectural aide to limit the infiltration of subsurface water. The seismic Category I structures below grade are protected against flooding by a water barrier consisting of waterstops and a waterproofing system. Several alternate approaches are described as follows:

NRC 227

- HDPE Double-Sided Textured Waterpoof Membrane

  Figures 3.4-1 and 3.4-2 show the application of this waterproofing approach for a mechanically stabilized earth (MSE) wall and for a step-back configuration.

- Cementitious Crystalline Waterproofing Additive

  Thi~~s~~se waterproofing system consists of~~is provided by~~ the introduction of a cementitious crystalline waterproofing additive to the nailed soil retention wall shotcrete or to the shotcrete applied to the rock surface as described in subsection 2.5.1. For the horizontal surface under the basemat, the cementitious crystalline waterproofing additive is added to the mud mat. The waterproofing additive is a unique chemical treatment added to the concrete at the time of batching and consists of portland cement, very fine silica sand, and various active proprietary chemicals. The active chemicals react with the moisture in fresh concrete, and the byproducts of cement hydration cause a catalytic reaction generating a nonsoluble crystalline formation of dendritic fibers throughout the pores and capillary tracts of the concrete. The concrete is thus sealed against penetration of water or liquid as shown on Figure 3.4-3. ~~Figures 3.4-1 and 3.4-2 show the application of the alternate waterproofing approaches for MSE wall and for step-back configurations.~~

- Sprayed-on Waterproofing Membrane

  This method may be used either for soil sites, in conjunction with an MSE wall, or for rock sites, where an open excavation may be used. Figure 3.4-4 shows the typical installation using MSE walls with the sprayed-on waterproofing membrane placed on the MSE wall panels and between the two layers of the mudmat. Where the vertical face of excavation is used as a form for the exterior walls, the waterproof membrane is installed on the vertical face of the excavation prior to placement of concrete in the exterior walls.

NRC 227

  The waterproof function of the membrane is not safety-related; however, the membrane between the mudmats must transfer horizontal shear forces due to seismic (SSE) loading. This function is seismic Category I. The specific static coefficient of friction between horizontal membrane and concrete is ≥ 0.7. The waterproof membrane will have physical properties, including surface and texture, to achieve the required static coefficient of friction. Primer, geotextile, or aggregate scatter may be added as required.

~~Process piping penetrations through the exterior walls of the nuclear island below grade are embedded in the wall or are welded to a steel sleeve embedded in the wall. There are no access openings or tunnels penetrating the exterior walls of the nuclear island below grade.~~

NRC 227

~~The reinforced concrete seismic Category I structures, incorporating the waterproofing and sealing features described above, provide hardened protection for safety-related structures, systems, and components as defined in Regulatory Guide 1.59.~~

~~Further detail concerning the excavated waterproofing design can be found in subsection 2.5.4.1.~~

3.4.1.1.2 Protection from Internal Flooding

The nuclear island general arrangement drawings provided in Section 1.2 are a useful reference for the internal flooding discussion.

The AP1000 arrangement provides physical separation of redundant safety-related components and systems from each other and from nonsafety-related components. As a result, component failures resulting from internal flooding do not prevent safe shutdown of the plant or prevent mitigation of the flooding event. Protection mechanisms are described in Section 3.6. The protection mechanisms related to minimizing the consequences of internal flooding include the following:

- Structural enclosures
- Structural barriers
- Curbs and elevated thresholds
- Leak detection systems
- Drain systems

The AP1000 minimizes the number of penetrations through enclosure or barrier walls below the flood level. Those few penetrations through flood protection walls that are below the maximum flood level are watertight. Any process piping penetrating below the maximum flood level either is embedded in the wall or floor or is welded to a steel sleeve embedded in the wall or floor. There are no watertight doors in the AP1000 used for internal flood protection because, as described in subsection 3.4.1.2.2, they are not needed to protect safe shutdown components from the effects of internal flooding. The only exceptions are the watertight doors on the two waste holdup tank compartments. These doors are provided to limit the consequences of failure on the spent fuel pit. The walls, floors, and penetrations are designed to withstand the maximum anticipated hydrodynamic loads associated with a pipe failure as described in Section 3.6.

3.4.1.2 Evaluation of Flooding Events

3.4.1.2.1 External Flooding

Base mat and exterior walls of seismic Category I structures are designed to resist upward and lateral pressures caused by the probable maximum flood and high ground water level. The vertical hydrostatic pressure acting uniformly at the bottom of the base mat is the product of the height to the high water level and the unit weight of water assumed as 62.4 lb/ft^3. The horizontal hydrostatic pressure acting on the exterior walls varies with height, with the maximum at the bottom of the wall and zero at the maximum water level. Minimum factors of safety for overturning, sliding, and flotation are described in subsection 3.8.5. There are no dynamic water forces associated with the probable maximum flood or high ground water level because they are below the finished grade.

NRC 227

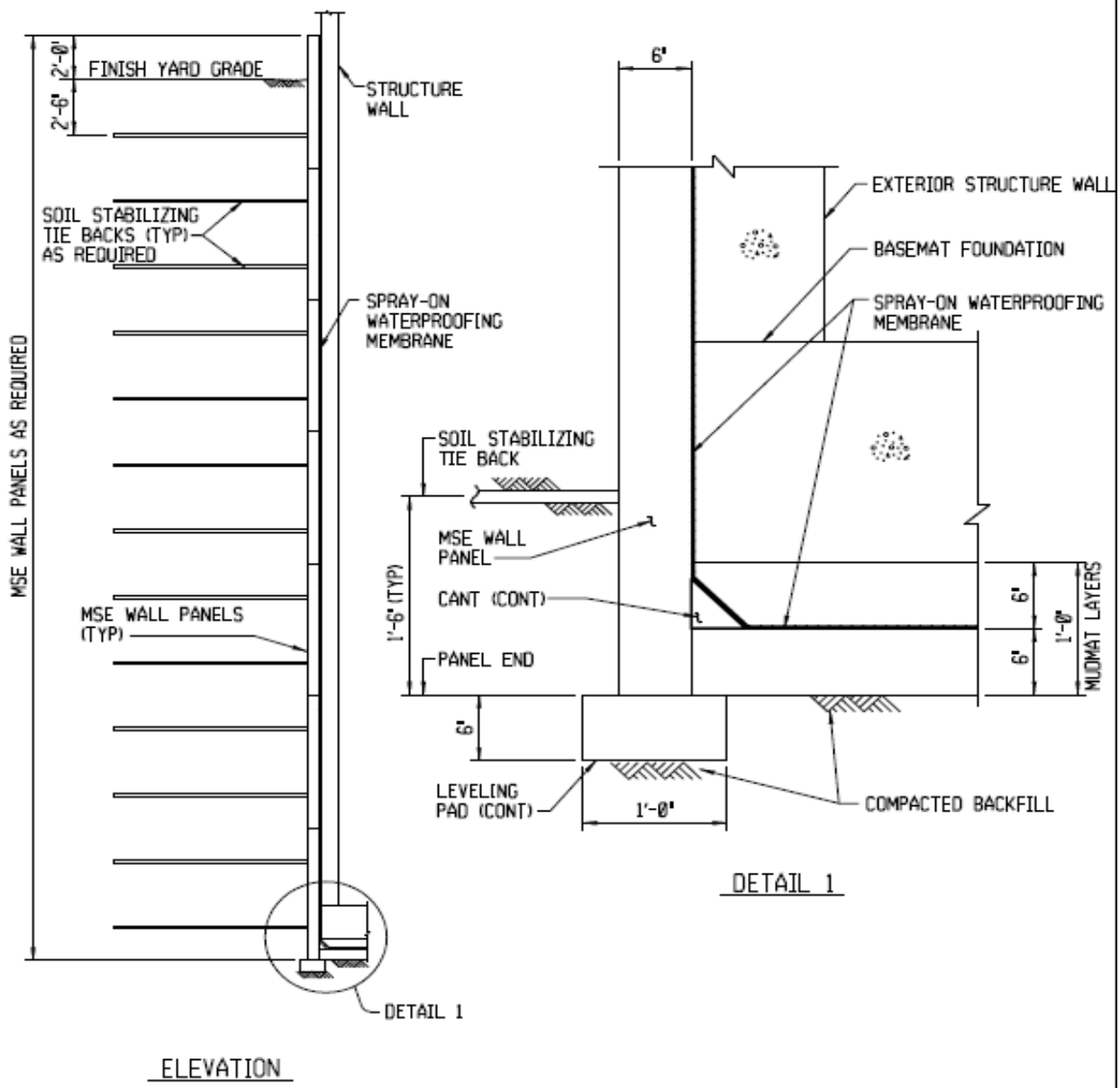

Figure 3.4-4

Membrane Corner Detail at Basemat and Exterior Wall

- For members subjected to tension, $\mu \leq .5*(e_u/e_y)$
  Where: e_u = ultimate strain
  e_y = yield strain

3.5.4 Combined License Information

The Combined License information requested in this subsection has been partially addressed in APP-GW-GLR-020 (Reference 1). ~~, and the applicable changes are incorporated into the DCD. The work that has been done is summarized in the following paragraph:~~

NRC 258

~~Technical Report APP-GW-GLR-020 includes evaluation of generic wind and tornado loadings on structures, discussion of missiles generated by tornadoes and extreme winds, and evaluation of other buildings for collapse and missile generation.~~

The information item ~~activities~~ completion activities required of the Combined License applicant are defined in APP-GW-GLR-020. These activities include development of site-specific parameters and verification of bounding conditions, site arrangement, and building construction. Specifically, the information that the applicant must evaluate is the following, demonstrating that any exceedances or differences do not compromise the safety of the plant:

- Site parameters for wind and tornado showing that the site satisfies the AP1000 site interface criteria for the wind and tornado conditions. If there are exceedances, they must be discussed and shown acceptable.

NRC 258

- Provide plant specific site plan and discuss any differences between the plant specific site plan and the typical site plan shown in Figure 1.2-2 of the AP1000 DCD Section 1.2.

- Verification that there are no other structures adjacent to the nuclear island other than: turbine building; annex building; radwaste building; and passive containment cooling ancillary water storage tank. If there are, then the effect of these structures on the AP1000 nuclear island must be discussed.

- Show that missiles caused by external events separate from the tornado have energies less than the tornado missile spectrum energies that the AP1000 is designed to withstand. If missile energy is greater, evaluate and show that it will not compromise the safety of AP1000 safety-related structures and components.

Completion of these activities by the Combined License applicant will complete the information item.

The following words represent the original Combined License Information item commitment:

> The Combined License applicant will demonstrate that the site satisfies the interface requirements provided in Section 2.2. This requires an evaluation for those external events that produce missiles that are more energetic than the tornado missiles postulated for design of the AP1000, or additional analyses of the AP1000 capability to handle the specific hazard.

NRC 218

Table 3.7.1-4 (Sheet 1 of 4)

STRAIN COMPATIBLE SOIL PROPERTIES

Depth to Bottom of Layer (ft)	Thickness of Layer (ft)	Layer Number	Total Unit Weight (kcf)	Initial G (ksf)	Initial Vs (fps)	Final G (ksf)	Final Vs (fps)	Damping
Firm Rock								
0.0								
5.0	5.0	1	0.15	57422	3500	57030	3499	0.015
10.0	5.0	2	0.15	57422	3500	56579	3485	0.016
15.0	5.0	3	0.15	56963	3486	55961	3466	0.014
20.0	5.0	4	0.15	56963	3486	55731	3459	0.015
25.0	5.0	5	0.15	56442	3470	54894	3433	0.016
30.0	5.0	6	0.15	56442	3470	55260	3444	0.014
33.5	3.5	7	0.15	55922	3454	54564	3422	0.015
39.5	6.0	8	0.15	55922	3454	54395	3417	0.015
45.0	5.5	9	0.15	55406	3438	53708	3395	0.016
60.0	15.0	10	0.15	55406	3438	53462	3388	0.017
70.0	10.0	11	0.15	54763	3418	52285	3350	0.018
80.0	10.0	12	0.15	54763	3418	51561	3327	0.020
90.0	10.0	13	0.15	53647	3383	49794	3269	0.021
100.0	10.0	14	0.15	53647	3383	49236	3251	0.022
Bedrock			0.15	300000	8000	298137	8000	0.000

NRC 218

Table 3.7.1-4 (Sheet 2 of 4)

STRAIN COMPATIBLE SOIL PROPERTIES

Depth to Bottom of Layer (ft)	Thickness of Layer (ft)	Layer Number	Total Unit Weight (kcf)	Initial G (ksf)	Initial Vs (fps)	Final G (ksf)	Final Vs (fps)	Damping
Soft Rock								
0								
10	10.0	1	0.15	27214	2417	27050	2402	0.007
20.0	10.0	2	0.15	27962	2450	27533	2424	0.009
30.0	10.0	3	0.15	28720	2483	28162	2451	0.009
40.0	10.0	4	0.15	29512	2517	28865	2481	0.010
60.0	20.0	5	0.15	30696	2567	29940	2527	0.010
80.0	20.0	6	0.15	32295	2633	31422	2589	0.011
120.0	40.0	7	0.15	34795	2733	33772	2684	0.011
160.0	40.0	8	0.15	38290	2867	37094	2813	0.011
200.0	40.0	9	0.15	41925	3000	40584	2942	0.011
240.0	40.0	10	0.15	45725	3133	44259	3073	0.011
Base	-	11	0.15	47702	3200	-	-	0.011

NRC 218

Table 3.7.1-4 (Sheet 3 of 4)

STRAIN COMPATIBLE SOIL PROPERTIES

Depth to Bottom of Layer (ft)	Thickness of Layer (ft)	Layer Number	Total Unit Weight (kcf)	Initial G (ksf)	Initial Vs (fps)	Final G (ksf)	Final Vs (fps)	Damping
Upper Bound Soft-to-Medium Soil								
0								
5	5.0	1	0.11	6440	1373	6272	1355	0.018
10.0	5.0	2	0.11	6440	1373	5894	1313	0.027
15.0	5.0	3	0.11	8626	1589	7741	1505	0.030
20.0	5.0	4	0.11	8626	1589	7310	1463	0.037
25.0	5.0	5	0.11	11415	1828	10323	1738	0.026
30.0	5.0	6	0.11	11415	1828	10071	1717	0.029
33.5	3.5	7	0.11	13231	1968	11683	1849	0.029
39.5	6.0	8	0.11	13231	1968	11478	1833	0.031
45.0	5.5	9	0.11	15659	2141	14303	2046	0.023
52.5	7.5	10	0.11	16012	2165	14444	2056	0.025
60.0	7.5	11	0.11	16012	2165	14228	2041	0.026
66.0	6.0	12	0.11	18850	2349	16841	2220	0.026
73.0	7.0	13	0.11	18850	2349	16665	2209	0.027
80.0	7.0	14	0.11	18850	2349	16495	2197	0.028
90.0	10.0	15	0.11	22179	2548	19544	2392	0.027
100.0	10.0	16	0.11	22179	2548	19326	2379	0.028
120.0	10.0	17	0.11	22179	2548	19024	2360	0.030
130.0	10.0	18	0.11	22179	2548	18698	2340	0.032
Base			0.15	298137	8000	298137	8000	0.000

NRC 218

Table 3.7.1-~~-~~4 (Sheet 4 of 4)

STRAIN COMPATIBLE SOIL PROPERTIES

NRC 220

Depth to Bottom of Layer (ft)	~~Depth to Bottom~~ Thickness of Layer (ft)	Layer Number~~Depth to Bottom of Layer (ft)~~	Total Unit Weight (kcf)~~Depth toBottomof Layer (ft)~~	Initial G (ksf)~~Depth toBottom of Layer (ft)~~	Initial Vs (fps)~~Depth to Bottom of Layer (ft)~~	Final G (ksf)~~Depth to Bottom of Layer (ft)~~	Final Vs (fps)~~Depth to Bottom of Layer (ft)~~	Damping~~Depth to Bottom of Layer (ft)~~
Soft-to-Medium Soil								
0								
10	10.0	1	0.11	3617	1029	3074	946	0.032
20.0	10.0	2	0.11	4044	1088	2989	933	0.056
30.0	10.0	3	0.11	4486	1146	2859	912	0.077
40.0	10.0	4	0.11	4952	1204	2843	909	0.089
60.0	20.0	5	0.11	5702	1292	2977	931	0.100
80.0	20.0	6	0.11	6772	1408	3453	1002	0.102
120.0	40.0	7	0.11	8560	1583	4764	1177	0.093
160.0	40.0	8	0.12	12304	1817	7343	1399	0.085
200.0	40.0	9	0.12	15661	2050	9277	1573	0.086
240.0	40.0	10	0.12	19424	2283	11490	1750	0.086
Base	-	11	0.12	21466	2400	-	-	0.093
Soft Soil								
0								
10	10.0	1	0.11	3444	1004	2925	922	0.033
20	10.0	2	0.11	3506	1013	2472	848	0.063
30	10.0	3	0.11	3561	1021	2044	771	0.089
40	10.0	4	0.11	3617	1029	1750	713	0.108
60	20.0	5	0.11	3709	1042	1484	657	0.128
80	20.0	6	0.11	3824	1058	1530	667	0.130
120	40.0	7	0.11	4007	1083	1603	683	0.136
160	40.0	8	0.11	4262	1117	1705	704	0.150
200	40.0	9	0.11	4518	1150	1807	725	0.150

3.8.3.6 Materials, Quality Control, and Special Construction Techniques

Subsection 3.8.4.6 describes the materials and quality control program used in the construction of the containment internal structures. The structural steel modules are constructed using carbon steel plates and shapes. However, Duplex 2101 (American Society for Testing and Materials 240, designation S32101) stainless steel plates are used on the surfaces of the modules in contact with water during normal operation or refueling. The structural wall and floor modules are fabricated and erected in accordance with AISC-N690. Loads during fabrication and erection due to handling and shipping are considered as normal loads as described in subsection 3.8.4.3.1.1. Packaging, shipping, receiving, storage and handling of structural modules are in accordance with NQA-1~~2~~, ~~P~~Subpart 2.2 (formerly ANSI/ASME N45.2.2 as specified in AISC N690).

NRC 271

3.8.3.6.1 Fabrication, Erection, and Construction of Structural Modules

Modular construction techniques are used extensively in the containment internal structures (Figure 3.8.3-1). Subassemblies, sized for commercial rail shipment, are assembled offsite and transported to the site. Onsite fabrication consists of combining the subassemblies in structural modules, which are then installed in the plant. A typical modular construction technique is described in the following paragraphs for Module CA01, which is the main structural module in the containment internal structures.

The CA01 module is a multicompartmented structure which, in its final form, comprises the central walls of the containment internal structures. The vertical walls of the module house the refueling cavity, the reactor vessel compartment, and the two steam generator compartments. The module (Figure 3.8.3-14) is in the form of a "T" and is approximately 88 feet long, 95 feet wide and 86 feet high. The module is assembled from about 40 prefabricated wall sections called structural submodules (Figure 3.8.3-15). The submodules are designed for railroad transport from the fabricator's shop to the plant site with sizes up to 12 feet by 12 feet by 80 feet long, weighing up to 80 tons. A typical submodule weighs between 9 and 11 tons. The submodules are assembled outside the nuclear island with full penetration welds between the faceplates of adjacent subunits. The completed CA01 module is lifted to its final location within the containment vessel by the heavy lift construction crane. Following placement of the CA01 module within the containment building, the hollow wall structures are filled with concrete, forming a portion of the structural walls of the containment internal structures.

Tolerances for fabrication, assembly and erection of the structural modules conform to the requirements of section 4 of ACI-117, sections 3.3 and 3.4 of AWS D1.1, and sections Q1.23 and Q1.25 of AISC-N690.

3.8.3.6.2 Nondestructive Examination

Nondestructive examination of the submodules and module is performed according to AISC-N690 and AWS D 1.1. Welds are visually examined for 100 percent of their length. Full penetration welds are inspected by ultrasonic or radiographic examination for 10 percent of their length. Partial penetration welds are inspected by magnetic particle or liquid penetrant examination for 10 percent of their length.

The nuclear island basemat below the containment vessel, and the containment internal structures basemat above the containment vessel, are simulated with solid tetrahedral elements. Nodes on the two basemats are connected with spring elements normal to the theoretical surface of the containment vessel.

Normal and extreme environmental loads and containment pressure loads are considered in the analysis. The normal loads include dead loads and live loads. Extreme environmental loads include the safe shutdown earthquake.

Dead loads are applied as inertia loads. Live loads and the safe shutdown earthquake loads are applied as concentrated loads on the nodes. The safe shutdown earthquake loads are applied as equivalent static loads using the assumption that while maximum response from one direction occurs, the responses from the other two directions are 40 percent of the maximum. Combinations of the three directions of the safe shutdown earthquake are considered.

Linear analyses are performed for all specified load combinations assuming that the soil springs can take tension. Critical load cases are then selected for non-linear analyses with basemat liftoff based on the results of the linear cases. The results from the analysis include the forces, shears, and moments in the basemat; the bearing pressures under the basemat; and the area of the basemat that is uplifted. Reinforcing steel areas are calculated from the member forces for each load combination case.

The required reinforcing steel for the portion of the basemat under the auxiliary building and under the shield building is determined by considering the reinforcement envelope for the full non-linear iteration of the most critical load combination cases. Additional reinforcement is provided in the design of the 6′ mat for soil sites such that the basemat can resist loads 20 percent greater than the demand calculated by the equivalent static acceleration analyses on uniform soil springs. This increase accommodates potential site specific lateral variability of the soil investigated separately in a series of paramedic studies. Figure 3.8.5-3 shows the basemat reinforcement.

NRC 221

3.8.5.4.2 Analyses of ~~s~~Settlement ~~d~~During ~~e~~Construction

Construction loads are evaluated in the design of the nuclear island basemat. This evaluation is performed for soil sites meeting the site interface requirements of subsection 2.5.4 at which settlement is predicted to be maximum. In the expected basemat construction sequence, concrete for the mat is placed in a single placement. The placement includes the first 6 feet of the thicker basemat below the containment vessel and shield building, but excludes the central zone directly below the bottom of the containment vessel. Construction continues with a portion of the shield building foundation and containment internal structure and the walls of the auxiliary building. The critical location for shear and moment in the basemat is around the perimeter of the shield building. Once the shield building and auxiliary building walls are completed to elevation 82′ -6″, the load path changes and loads are resisted by the basemat stiffened by the shear walls.

NRC 221

The analyses account for the construction sequence, the associated time varying load and stiffness of the nuclear island structures, and the resulting settlement time history. To maximize the potential settlement, the analyses consider a 360 feet deep soft soil site with soil properties

consistent with the soft soil case described in subsection 2A.2. Two soil profiles are analyzed to represent limiting foundation conditions, and address both cohesive and cohesionless soils and combinations thereof:

- A soft soil site with alternating layers of sand and clay. The assumptions in this profile maximize the settlement in the early stages of construction and maximize the impact of dewatering.

- A soft soil site with clay. The assumptions maximize the settlement during the later stages of construction and during plant operation.

The analyses focus on the response of the basemat in the early stages of construction when it could be susceptible to differential loading and deformations. As subsequent construction incorporates concrete shear walls associated with the auxiliary building and the shield building, the structural system significantly strengthens, minimizing the impact of differential settlement. The displacements, and the moments and shear forces induced in the basemat are calculated at various stages in the construction sequence. These member forces are evaluated in accordance with ACI 349 using the load factors given in Table 3.8.4-2. Three construction sequences are examined to demonstrate construction flexibility within broad limits.

- A base construction sequence which assumes no unscheduled delays. The site is dewatered and excavated. Concrete for the basemat is placed in a single pour. Concrete for the exterior walls below grade is placed after the basemat is in place. Exterior and interior walls of the auxiliary building are placed in 16 to 18-foot lifts.

- A delayed shield building case which assumes a delay in the placement of concrete in the shield building while construction continues in the auxiliary building. This bounding case maximizes tension stresses on the top of the basemat. The delayed shield building case assumes that no additional concrete is placed in the shield building after the pedestal for the containment vessel head is constructed. The analysis incorporates construction in the auxiliary building to elevation 117′-6″ and filling the CA20 module with concrete to elevation 135′-3″, and thereafter assumes that construction is suspended.

NRC 221

- A delayed auxiliary building case which assumes a delay in the construction of the auxiliary building while concrete placement for the shield building continues. This bounding case maximizes tension stresses in the bottom of the basemat. The delayed auxiliary building case assumes that no concrete is placed in the auxiliary building after the basemat is constructed. The analysis incorporates construction in the shield building to elevation 84′-0″ and thereafter assumes that construction is suspended.

For the base construction sequence, the largest basemat moments and shears occur at the interface with the shield building before the connections between the auxiliary building and the shield building are credited. Once the shield building and auxiliary building walls are completed to elevation 82′ -6″, the load path for successive loads changes and the loads are resisted by the basemat stiffened by the shear walls. Dewatering is discontinued once construction reaches grade, resulting in the rebound of the subsurface.

Of the three construction scenarios analyzed, the delayed auxiliary building case results in the largest demand for the bottom reinforcement in the basemat. The delayed shield building results in the largest demand for the top reinforcement in the basemat. The analyses of the three construction sequences demonstrate the following:

- The design of the basemat and superstructure accommodates the construction-induced stresses considering the construction sequence and the effects of the settlement time history.

- The design of the basemat can accommodate delays in the shield building so long as the auxiliary building construction is suspended at elevation 117′ -0″. Resumption in construction of the auxiliary building can proceed once the shield building is advanced to elevation 100′ 0″.

- The design of the basemat can accommodate delays in the auxiliary building so long as the shield building construction is suspended at elevation 84′ -0″ feet. Resumption in construction of the shield building can proceed once the auxiliary building is advanced to elevation 100′ 0″.

- After the structure is in place and cured to elevation 100′ -0″, the basemat and structure act as an integral 40 foot deep structure and the loading due to construction above this elevation is not expected to cause significant additional flexural demand with respect to the basemat and the shield building concrete below the containment vessel. Accordingly, there is no need for placing constraints on the construction sequence above elevation 100′ 0″.

The site conditions considered in the evaluation provide reasonable bounds on construction induced stresses in the basemat. Accordingly, the basemat design is adequate for practically all soil sites and it can tolerate major variations in the construction sequence without causing excessive deformations, moments and shears due to settlement over the plant life.

The analyses of alternate construction scenarios show that member forces in the basemat are acceptable subject to the following limits imposed for soft soil sites on the relative level of construction of the buildings prior to completion of both buildings at elevation 82′ -6″:

- Concrete may not be placed above elevation 84′ -0″ for the shield building or containment internal structure.

NRC 221

- Concrete may not be placed above elevation 117′ -6″ in the auxiliary building, <u>except in the CA20 structural module, where it may be placed to elevation 135′-3″</u>.

Member forces in the basemat considering settlement during construction differ from those obtained from the analyses on uniform elastic soil springs described in subsection 3.8.5.4.1. Although the bearing pressures at the end of construction are similar in the two analyses, the resulting member forces differ due to the progressive changes in structural configuration during construction. The design using the results of the analyses of subsection 3.8.5.4.1 provides sufficient structural strength to resist the specified loads including bearing reactions on the

NRC 222

underside of the basemat. The member forces in these analyses are those due to primary externally applied loads and do not consider secondary stresses and strains~~However, this may require redistribution of stresses~~ locked in during early stages of construction. A confirmatory evaluation was performed to demonstrate that the member forces due to design basis loads, including locked-in forces due to construction settlement, remain within the capacity of the section. The evaluation was performed for critical locations which were selected as locations where the effect of locked in member forces were judged to be most significant.

The governing scenario is the case with a delay in the auxiliary building construction for the soft soil site with alternating layers of sand and clay. The delay is postulated to occur just prior to the stage where the auxiliary building walls are constructed. Member forces at the end of construction are calculated considering the effects of settlement during construction. The difference in these member forces from those calculated for dead load in the analyses on soil springs are added as additional dead loads in the critical safe shutdown earthquake load combination.

The member forces for the load combination of dead load plus safe shutdown earthquake, including the member forces locked-in during various stages of plant construction, are within the design capacity for the five critical locations. The evaluation demonstrates that the member forces including locked-in forces calculated by elastic analyses remain within the capacity of the section.

3.8.5.4.3 Design Summary Report

A design summary report is prepared for the basemat documenting that the structures meet the acceptance criteria specified in subsection 3.8.5.5.

Deviations from the design due to as-procured or as-built conditions are acceptable based on an evaluation consistent with the methods and procedures of Sections 3.7 and 3.8 provided the following acceptance criteria are met.

- The structural design meets the acceptance criteria specified in Section 3.8
- The seismic floor response spectra meet the acceptance criteria specified in subsection 3.7.5.4

Depending on the extent of the deviations, the evaluation may range from documentation of an engineering judgement to performance of a revised analysis and design. The results of the evaluation will be documented in an as-built summary report.

3.8.5.4.4 Design Summary of Critical Sections

The basemat is designed to meet the acceptance criteria specified in subsection 3.8.4.5. Two critical portions of the basemat are identified below together with a summary of their design. The boundaries are defined by the walls and column lines which are shown in Figure 3.7.2-12 (sheet 1 of 12). Table 3.8.5-3 shows the reinforcement required and the reinforcement provided for the critical sections.

F_D = maximum dynamic lateral force, including dynamic active earth pressures
F_H = maximum lateral force due to all loads except seismic loads

The sliding resistance is based on the friction force developed between the basemat and the foundation. The governing friction value in the interface zone is a thin soil layer below the mudmat with an angle of internal friction of 35° giving a coefficient of friction of 0.70. The effect of buoyancy due to the water table is included in calculating the sliding resistance.

3.8.5.5.4 Overturning

The factor of safety against overturning of the nuclear island during a tornado or a design wind is shown in Table 3.8.5-2 and is calculated as follows:

$$F.S. = \frac{M_R}{M_O}$$

where:

F.S. = factor of safety against overturning from tornado or design wind
M_R = resisting moment
M_O = overturning moment of tornado or design wind

The factor of safety against overturning of the nuclear island during a safe shutdown earthquake is shown in Table 3.8.5-2 and is evaluated using the static moment balance approach assuming overturning about the edge of the nuclear island at the bottom of the basemat. The factor of safety is defined as follows:

$$F.S. = (M_R + M_P)/(M_O + M_{AO})$$

where:

F.S. = factor of safety against overturning from a safe shutdown earthquake
M_R = nuclear island's resisting moment against overturning
M_O = maximum safe shutdown earthquake induced overturning moment acting on the nuclear island, applied as a static moment
M_P = Resistance moment associated with passive pressure
M_{AO} = Moment due to lateral forces caused by active and overburden pressures

The resisting moment is equal to the nuclear island dead weight, minus buoyant force from ground water table, multiplied by the distance from the edge of the nuclear island to its center of gravity. The overturning moment is the maximum moment about the same edge from the time history analyses of the nuclear island lumped mass stick model described in subsection 3.7.2~~considering all of the soil cases including hard rock~~.

NRC 225

Table 3.8.5-2

FACTORS OF SAFETY FOR FLOTATION, OVERTURNING AND SLIDING OF NUCLEAR ISLAND STRUCTURES

Environmental Effect	Factor of Safety[1]
Flotation	
High Ground Water Table	3.7
Design Basis Flood	3.5
Sliding	
Design Wind, North-South	23.2
Design Wind, East-West	17.4
Design Basis Tornado, North-South	12.8
Design Basis Tornado, East-West	10.6
Safe Shutdown Earthquake, North-South	1.28[2]
NRC 225 Safe Shutdown Earthquake, East-West	1.3~~3~~4[2]
Overturning	
Design Wind, North-South	51.5
Design Wind, East-West	27.9
Design Basis Tornado, North-South	17.7
Design Basis Tornado, East-West	9.6
NRC 225 Safe Shutdown Earthquake, North-South	1.35~~9~~
Safe Shutdown Earthquake, East-West	1.12~~07~~[3]

Note:

NRC 225 1. Factor of safety is calculated for the envelope of the soil and rock sites described in subsection 3.7.1.4. ~~Minimum value for all sites is shown in this table.~~
2. Factor of safety is shown for soils below and adjacent to nuclear island having angle of internal friction of 35 degrees.
NRC 225 3. ASCE/SEI 43-05, Reference 42~~6~~, recognizes that there is considerable margin beyond that given by the moment balance formula and permits a nonlinear rocking analysis. The nonlinear (liftoff allowed) time history analysis
NRC 225 described in Appendix 3G.10 showed that the nuclear island basemat uplift effect is insignificant. Further, these analyses were performed for free field seismic ZPA input as high as 0.5g without significant uplift. Therefore the factor of safety against overturning is greater than 1.67 (0.5g/0.3g).

NRC 134

Table 3.8.5-2

FACTORS OF SAFETY FOR FLOTATION, OVERTURNING AND SLIDING OF NUCLEAR ISLAND STRUCTURES

~~**HARD ROCK CONDITION**~~

Environmental Effect	Factor of Safety[1]
Flotation	
High Ground Water Table	3.7
Design Basis Flood	3.5
Sliding	
Design Wind, North-South	23.2
Design Wind, East-West	17.4
Design Basis Tornado, North-South	12.8
Design Basis Tornado, East-West	10.6
Safe Shutdown Earthquake, North-South	1.28[2]
Safe Shutdown Earthquake, East-West	1.34[2]
Overturning	
Design Wind, North-South	51.5
Design Wind, East-West	27.9
Design Basis Tornado, North-South	17.7
Design Basis Tornado, East-West	9.6
Safe Shutdown Earthquake, North-South	1.39
Safe Shutdown Earthquake, East-West	1.07[3]

TR-134, Rev 0

Note:

1. Factor of safety is calculated for the soil and rock sites described in subsection 3.7.1.4. Minimum value for all sites is shown in this table.
2. Factor of safety is shown for soils below and adjacent to nuclear island having angle of internal friction of 35 degrees.

NRC 134

NRC 134

3. ~~The factor of safety of 1.07 does not consider active and passive soil pressures on the external walls below grade. When these soil pressures are considered for overturning (as they are in the sliding evaluation), the minimum factor of safety against overturning increases to 1.12. This factor of safety meets the requirement of 1.1 based on the conservative moment balance formula treating the seismic moment as static loads.~~ ASCE/SEI 43-05, Reference 46, recognizes that there is considerable margin beyond that given by the moment balance formula and permits a nonlinear rocking analysis. The nonlinear (liftoff allowed) time history analysis described in Appendix 3G~~.6~~ showed that the nuclear island basemat uplift effect is insignificant. Further, these analyses were performed for free field seismic ZPA input as high as 0.5g without significant uplift. Therefore the factor of safety against overturning is greater than 1.67 (0.5g/0.3g).

Equipment that has been previously qualified by means of test and analysis equivalent to those described herein is acceptable provided that proper documentation is submitted.

Seismic qualification of seismic Category I instrumentation and electrical equipment is demonstrated by either type testing or a combination of test and analysis. The qualification method employed by the AP1000 for a particular item of equipment is based upon many factors including practicability, complexity of equipment, economics, and availability of previous seismic qualification. The qualification method employed for a particular item of instrumentation or electrical equipment is identified in the individual equipment qualification data package.

For active valves and dampers the AP1000 uses a combination of tests and analyses to demonstrate the structural integrity and operability of such components. Other seismic Category I mechanical equipment is qualified by analysis to demonstrate structural integrity.

The methods of load combination and methods of combining dynamic responses for mechanical equipment are discussed in Section 3.9. For instrumentation and electrical equipment, the only dynamic loads considered in testing are seismic loads and hydrodynamic and vibratory loads where applicable. Other dynamic loads to which instrumentation and electrical equipment may be subjected are enveloped by this testing or are addressed by analysis.

NRC 261

~~The seismic qualification of safety-related equipment may be based on properly documented experience data. [*Seismic qualification based on experience is performed in accordance with Section 9.0 of IEEE 344-1987 on a case-by-case basis. In such cases where experience data are used, aspects of the methodology, qualification basis, and supporting data will be properly documented in accordance with subsection 3.10.6.]** The methodology, qualification basis, and reference test data for seismic qualification based on test experience are documented in accordance with the recommended practices of Sections 9 and 10 of IEEE 344-1987 (see Appendix 3D). Identification of the specific equipment qualified using the experience-based methodology, the details of the methodology, and the corresponding experience data for each piece of equipment are included in the equipment qualification report. The specific equipment details of the methodology, and the corresponding experience data for each piece of equipment is identified as discussed in subsection 3.10.6.~~

3.10.2.1 Seismic Qualification of Instrumentation and Electrical Equipment

3.10.2.1.1 Type Testing

For seismic Category I instrumentation and electrical equipment, seismic qualification by test is performed according to IEEE 344-1987. Where testing is used, multifrequency, multiaxis inputs are developed by the general procedures outlined in Appendix 3D. The test results contained in the individual equipment qualification data packages demonstrate that the measured test response spectrum envelops the required response spectrum defined in the equipment qualification data package.

Alternative test methods, such as single-frequency, single-axis inputs for line-mounted equipment, are used in selected cases as permitted by IEEE 344-1987 and Regulatory Guide 1.100. These methods are further described in Appendix 3D.

NRC 261

~~*NRC Staff approval is required prior to implementing a change in this material; see DCD Introduction Section 3.5.~~

3.10.4 Documentation

The results of tests and analyses verifying that the criteria established in subsection 3.10.1 are satisfied, employing the qualification methods described in subsections 3.10.2 and 3.10.3, are included in the individual equipment qualification data packages and test reports. The upkeep of the equipment qualification file is maintained during the equipment selection and procurement phase is discussed in subsection 3.11.5.

Seismic qualification of equipment is documented in equipment qualification data packages, test reports, analysis reports, and calculation notes. Appendix 3D provides guidance in this area.

3.10.5 Standard Review Plan Evaluation

A summary describing the Standard Review Plan differences in regard to seismic and dynamic qualification of mechanical and electrical equipment is provided subsection 1.9.2.

3.10.6 Combined License Information Item on Experienced-Based Qualification

This section is deleted.~~The Combined License information requested in this subsection has been totally addressed in APP-GW-GLN-006 (Reference 3) and APP-GW-GLR-031(Reference 4). No additional work is required by the Combined License applicant to address the Combined License information requested in this subsection.~~

NRC 261

~~The following words represent the original Combined License Information item commitment, which has been addressed as discussed above:~~

> ~~*[The Combined License applicant will address, as part of the Combined License application, identification of the equipment qualified based on experience and include details of the methodology and the corresponding experience data. The corresponding experience data for each piece of equipment will be included in the equipment qualification file.]**~~

3.10.7 References

1. IEEE 344-1987, "Recommended Practices for Seismic Qualification of Class 1E Equipment for Nuclear Power Generating Stations."

2. IEEE 382-1996, "IEEE Standard for Qualification of Actuators for Power-Operated Valve Assemblies with Safety-Related Functions for Nuclear Power Plants."

~~3. APP-GW-GLN-006, "Methodology for Qualifying AP1000 Safety Related Electrical and Mechanical Equipment," Westinghouse Electric Company LLC.~~

NRC 261

~~4. APP-GW-GLR-031, "Seismic Qualification Using Test Experience Based Method for AP1000 Safety Related Equipment," Westinghouse Electric Company LLC.~~

~~5.~~3. APP-GW-GLN-144, "AP1000 Design Control Document High Frequency Seismic Tier 1 Changes," Westinghouse Electric Company LLC.

NRC 261 ~~*NRC Staff approval is required prior to implementing a change in this material; see DCD Introduction Section 3.5.~~

3.10.4 Documentation

The results of tests and analyses verifying that the criteria established in subsection 3.10.1 are satisfied, employing the qualification methods described in subsections 3.10.2 and 3.10.3, are included in the individual equipment qualification data packages and test reports. The upkeep of the equipment qualification file is maintained during the equipment selection and procurement phase is discussed in subsection 3.11.5.

Seismic qualification of equipment is documented in equipment qualification data packages, test reports, analysis reports, and calculation notes. Appendix 3D provides guidance in this area.

3.10.5 Standard Review Plan Evaluation

A summary describing the Standard Review Plan differences in regard to seismic and dynamic qualification of mechanical and electrical equipment is provided subsection 1.9.2.

3.10.6 Combined License Information Item on Experienced-Based Qualification

The Combined License information requested in this subsection has been totally addressed in APP-GW-GLN-006 (Reference 3) and APP-GW-GLR-031(Reference 4). No additional work is required by the Combined License applicant to address the Combined License information requested in this subsection.

The following words represent the original Combined License Information item commitment, which has been addressed as discussed above:

*[The Combined License applicant will address, as part of the Combined License application, identification of the equipment qualified based on experience and include details of the methodology and the corresponding experience data. The corresponding experience data for each piece of equipment will be included in the equipment qualification file.]**

3.10.7 References

1. IEEE 344-1987, "Recommended Practices for Seismic Qualification of Class 1E Equipment for Nuclear Power Generating Stations."

2. IEEE 382-1996, "IEEE Standard for Qualification of Actuators for Power-Operated Valve Assemblies with Safety-Related Functions for Nuclear Power Plants."

3. APP-GW-GLN-006, "Methodology for Qualifying AP1000 Safety Related Electrical and Mechanical Equipment," Westinghouse Electric Company LLC.

4. APP-GW-GLR-031, "Seismic Qualification Using Test Experience-Based Method for AP1000 Safety Related Equipment," Westinghouse Electric Company LLC.

NRC 191

5. APP-GW-GLN-144, "AP1000 Design Control Document High Frequency Seismic Tier 1 Changes," Westinghouse Electric Company LLC.

*NRC Staff approval is required prior to implementing a change in this material; see DCD Introduction Section 3.5.

TR-134, Rev 1

In the event of potential flooding/wetting, one of the following criteria is applied for protection of equipment for service in such an environment:

- Equipment will be qualified for submergence due to flooding/wetting.
- Equipment will be protected from wetting due to spray.
- Equipment will be evaluated to show that failure of the equipment due to flooding/wetting is acceptable since its safety-related function is not required or has otherwise been accomplished.

3.11.1.3 Equipment Operability Times

For the AP1000 Class 1E electrical and active mechanical equipment, post-accident operability times are shown in Table 3D.4-2 in Appendix 3D.

Specific information for each device qualified as part of the IEEE 323-1974 qualification program is contained in the appropriate equipment qualification data package.

The active mechanical component is qualified for operability as discussed in Section 3.10, using test, analysis, or a combination of tests and analyses. This operability program, combined with the qualification of the electrical appurtenances (for example, valve operators) discussed in the appropriate equipment qualification data packages, demonstrates qualification.

3.11.1.4 Standard Review Plan Evaluation

A discussion of the Standard Review Plan requirements in regard to environmental qualification of mechanical equipment is provided in subsection 1.9.2.

3.11.2 Qualification Tests and Analysis

3.11.2.1 Environmental Qualification of Electrical Equipment

The AP1000 approach for environmental qualification of Class 1E equipment is outlined in Appendix 3D. The~~is~~ Appendix 3D methodology is developed based on the guidelines provided in IEEE 323-1974 (Reference 1) and IEEE 344-1987 (Reference 2).

NRC 230

Qualification for equipment in a harsh environment is based on type testing or testing and analysis. Analysis may be used to determine significant aging mechanisms in mild environment applications. Type testing includes thermal and mechanical aging, radiation, and exposure to extremes of environmental, seismic, and vibration effects. Type testing is done with representative samples of the production line equipment according to the sequence indicated in IEEE 323-1974 to the specified service conditions, including margin. The testing takes into account normal and abnormal plant operation and design basis accident and post-design basis accident operations, as required.

When reliable data and proven analytical methods are available, environmental qualification may be based on analysis supported by partial type test data. This method includes justification of the methods, theories, and assumptions used (that is, mathematical or logical proof based on actual

test data) that the equipment meets or exceeds its specified performance requirements when subjected to normal, abnormal, and design basis accident environmental conditions.

NRC 230 Regulatory guides providing guidance for meeting the requirements of 10CFR50, Appendix A, General Design Criteria 1, 2, 4, 23, and 50; Appendix B, Criteria III, XI, and XVII to 10CFR50 and 10CFR50.49, include Regulatory Guide 1.89, Regulatory Guide 1.30, Regulatory Guide 1.63, Regulatory Guide 1.73, Regulatory Guide 1.100, and Regulatory Guide 1.131. The maintenance surveillance program follows the guidance of Regulatory Guide 1.33.

Additional information regarding conformance with each of these regulatory guides is given in Section 1.9.

3.11.2.2 Environmental Qualification of Mechanical Equipment

AP1000 mechanical components identified in Table 3.11-1 are qualified by design to perform their required functions under the appropriate environmental effects of normal, abnormal, accident, and post-accident conditions as required by General Design Criterion 4 and discussed in Appendix 3D. For mild environments, the area conditions do not change as a result of an accident. There are no degrading environmental effects that lead to common mode failure of equipment in mild environments. Mechanical equipment located in harsh environmental zones is designed to perform under the appropriate environmental conditions.

For mechanical equipment, there are two categories of components:

- Active equipment – equipment that performs a mechanical motion as part of its safety-related function.

  The program for environmental qualification of active mechanical components is based on a combination of design, test, and analysis of critical sub-components, which is supported by maintenance and surveillance programs.

- Nonactive equipment – equipment whose only safety-related function is structural integrity. Nonactive components are designed for structural integrity according to ASME Code, Section III, as discussed in Section 3.9.

3.11.3 Loss of Ventilation

The abnormal environmental conditions shown on Tables 3D.5-3 and 3D.5-4 reflect anticipated maximum conditions based on loss of normal ventilation systems.

Normal containment heat removal is provided by the nonsafety-related containment air recirculation cooling system. If this system is out of service for an extended period of time, the passive containment cooling system may be initiated to maintain the temperature and pressure below the limits noted. Environmentally qualified equipment located in containment performs its functions under these conditions until the normal containment cooling system is restored.

Equipment areas outside containment and outside the main control room are maintained at normal environmental conditions by nonsafety-related HVAC systems. If these systems are disabled, the

heat generated by this equipment is absorbed by the surrounding concrete with an ambient temperature rise that does not exceed the abnormal condition. Normal HVAC is restored within 72 hours or ventilation is provided as discussed in Section 6.4.

If the normal nonsafety-related main control room HVAC is lost, the heat generated by equipment and people is absorbed by the surrounding concrete. Normal heating, ventilation, and air-conditioning is restored within 72 hours or ventilation is provided as discussed in Section 6.4.

3.11.4 Estimated Radiation and Chemical Environment

The plant-specific estimates of the radiation dose incurred by equipment during normal operation is shown in Table 3D.5-2 and the estimated doses following a loss-of-coolant accident are defined in Table 3D.5-5.

The identified equipment is qualified to perform functions in the radiation environments present during normal and design basis accident conditions. The normal operational exposure is based upon design source terms presented in Chapter 11 and subsection 12.2.1. The equipment and shielding configurations are presented in Section 12.3. Post-accident monitoring, reactor trip and engineered safety features system and component radiation exposures are dependent on the location of the equipment in the plant. Source terms and other accident parameters are presented in subsection 12.2.1 and Chapter 15.

The maximum combined integrated radiation dose inside containment is based on the effects of the normally expected radiation environment (gamma) over the equipment's installed life plus that associated with the most severe design basis event (gamma and beta) during or following which the equipment is required to remain functional.

The chemical environment following a loss of coolant accident is primarily based on the chemistry of the reactor coolant system fluid since there is no caustic containment spray. Sump pH adjustments are considered for certain qualification tests. This is discussed further in Appendix 3D.

3.11.5 Combined License Information Item for Equipment Qualification File

Westinghouse Electric Company LLC will act as the agent for the COL holder during the equipment design phase, equipment selection and procurement phase, equipment qualification phase, plant construction phase, and ITAAC inspection phases.

The COL holder will define the process and procedures for which the equipment qualification files will be accepted from Westinghouse and how the files will be retained and maintained in an auditable format for the period that the equipment is installed and/or stored for future use in the nuclear power plant.

3.11.6 References

1. IEEE 323-1974, "IEEE Standard for Qualifying Class 1E Equipment for Nuclear Power Generating Stations."

NRC 230

2. IEEE 344-1987, "IEEE Recommended Practices for Seismic Qualification of Class 1E Equipment for Nuclear Power Generating Stations."

Attachment C, "Effects of Gamma Radiation Doses Below 10^4 rads on the Mechanical Properties of Materials," provides the basis that radiation aging below 10^4 rads is not a significant factor in the ability of the equipment to perform properly during a seismic event. For some devices, electrical properties are degraded above~~below~~ 10^3 rads. Radiation aging for safety-related equipment which is subject to lifetime doses of less than 10^4 rads (10^3 rads for certain electrical components) and not subject to~~not required to perform a safety-related function in~~ a high-energy line break environment ~~or subject to lifetime doses of less than 10^4 rads~~ is not required to be addressed in AP1000 qualification~~test~~ programs.

NRC 231

Attachment D, "Accelerated Thermal Aging Parameters," describes the methodology employed in calculating the accelerated thermal aging parameters used in this program.

Attachment E, "Seismic Qualification Techniques," discusses available methods for establishing a seismic qualification basis, by either test or analysis, and its application to the qualification of safety-related equipment for the AP1000.

3D.1 Purpose

The basic objectives of qualification of safety-related electrical and mechanical equipment follow:

- To reduce the potential for common cause failures due to specified environmental and seismic events
- To demonstrate that safety-related electrical and mechanical equipment is capable of performing its designated safety-related functions.

This appendix describes the methodology that has been adopted to qualify equipment according to IEEE 627-1980, "IEEE Standard for Design Qualification of Safety System Equipment Used in Nuclear Power Generating Stations." The two standards primarily used to demonstrate compliance with this standard are IEEE 323-1974, "IEEE Standard for Qualifying Class 1E Equipment for Nuclear Power Generating Stations," and IEEE 344-1987, "IEEE Recommended Practice for Seismic Qualification of Class 1E Equipment for Nuclear Power Generating Stations."

3D.2 Scope

The qualification criteria, methods, and environmental conditions described constitute the methodology that is adopted to comply with the standards for the AP1000. This methodology applies to safety-related, seismic Category I electrical and mechanical equipment and is also used for certain monitoring equipment. Seismic Category II equipment is also within the scope of this program. The criteria used for the design of seismic Category II structures, systems, and components are discussed in Section 3.7.

Performance during abnormal environmental conditions, while not specifically designated as an industry or a regulatory qualification requirement, is also addressed by this appendix. Performance during normal service conditions is demonstrated by tests and inspections addressed by the equipment specification. Electromagnetic interference (EMI) testing or analysis is not included in the qualification process and is addressed on an individual equipment basis, as necessary.

- The radiation source terms used in qualification differ from those of Regulatory Guide 1.89, and are described in Section 3D.5 of this appendix

- The seismic qualification requirements employ the recommendations of IEEE 344-1987 as described in Attachment E of this appendix.

Regulatory Guide 1.92, "Combining Modal Responses and Spatial Components in Seismic Response Analysis" – The guide describes methods and procedures for the following:

- Combining the values of the response of individual modes in a response spectrum modal dynamic analysis to find the representative maximum value of a particular response of interest for each of the three orthogonal seismic spatial components

- Combining the maximum values (or representative maximum values) of the responses for a given element of a system or item of equipment, determined for each of the three orthogonal spatial components.

NRC 232

~~Regulatory Guide 1.97, Revision 3, "Instrumentation for Light-Water-Cooled Nuclear Power Plants to Access Plant and Environs Conditions During and Following and an Accident." The guide describes a method acceptable to provide instrumentation to monitor plant variables and systems during and following an accident in a light-water-cooled nuclear power plant. The AP1000 program, identified as the post-accident monitoring instrumentation system (PAMS), provides the capability to monitor plant variables and systems operating status during and following an accident. PAMS includes those instruments provided to indicate system operating status and furnish information regarding the release of radioactive materials.~~

The AP1000 equipment qualification program employs methods consistent with the recommendations of Regulatory Guide 1.92 when combining individual modal response values or the response of three independent spatial components in seismic analyses.

NRC 232

Regulatory Guide 1.97, Revision 3, "Instrumentation for Light-Water-Cooled Nuclear Power Plants to Access Plant and Environs Conditions During and Following an Accident." The guide describes a method acceptable to provide instrumentation to monitor plant variables and systems during and following an accident in a light-water-cooled nuclear power plant. The AP1000 program, identified as the post-accident monitoring instrumentation system (PAMS), provides the capability to monitor plant variables and systems operating status during and following an accident. PAMS includes those instruments provided to indicate system operating status and furnish information regarding the release of radioactive materials.

Regulatory Guide 1.100, "Seismic Qualification of Electrical Equipment for Nuclear Power Plants" – The guide endorses IEEE 344-1987. Regulatory Guide 1.100 particularly notes that IEEE 344-1987 is applied in the qualification of safety-related mechanical equipment, as well as Class 1E electrical equipment. The AP1000 equipment qualification methodology employs the recommendations of Regulatory Guide 1.100, as described in Attachment E of this appendix.

Regulatory Guide 1.122, "Development of Floor Design Response Spectra for Seismic Design of Floor-Supported Equipment or Components" – The guide describes specific methods for

developing floor (and other equipment mounting locations) response spectra. Included are specific criteria for the broadening frequency amplitude peaks and smoothing of the frequency amplitude spectrum to incorporate conservatism in the seismic requirements. This is to compensate for other uncertainties of analysis. The AP1000 equipment qualification program employs methods consistent with the recommendations of Regulatory Guide 1.122.

Regulatory Guide 1.131, "Qualification Tests of Electrical Cables, Field Splices, and Connections for Light-Water Cooled Nuclear Power Plants" – The guide endorses IEEE 383-1974. The AP1000 equipment qualification program employs the recommendations of Regulatory Guide 1.131 in specifying the qualification program plans where this guide supplements the guidance of IEEE 383 and to further demonstrate conformance with the guidance of IEEE 323. As neither IEEE 383 nor Regulatory Guide 1.131 specifically addresses considerations for cable field splices and connections, guidance for their qualification is taken from IEEE 572 and Regulatory Guide 1.156.

Regulatory Guide 1.156, "Environmental Qualification of Connection Assemblies for Nuclear Power Plants" – The guide endorses IEEE 572-1985. The AP1000 equipment qualification program employs the recommendations of Regulatory Guide 1.156 in specifying the qualification program plans where this guide supplements the guidance of IEEE 572 to demonstrate conformance with the guidance of IEEE 323.

Regulatory Guide 1.158, "Qualification of Safety-Related Lead Storage Batteries for Nuclear Power Plants" – The guide endorses IEEE 535-1986. The AP1000 equipment qualification program employs the recommendations of Regulatory Guide 1.158 in specifying the qualification program plans where this guide supplements the guidance of IEEE 535 to demonstrate conformance with the guidance of IEEE 323.

NRC 232

Regulatory Guide 1.180, “Guidelines for Evaluating Electromagnetic and Radio-Frequency Interference in Safety-Related Instrumentation and Control Systems.” Regulatory Guide 1.180 provides guidance to evaluate Electromagnetic and Radio-Frequency Interference in Safety-Related Instrumentation and Control Systems. The AP1000 equipment qualification program employs methods consistent with the recommendations of Regulatory Guide 1.180, where applicable.

Regulatory Guide 1.183, “Alternate Radiological Source Terms for Evaluating Design Basis Accidents at Nuclear Power Reactor.” The radiation dose rates and integrated doses applicable for AP1000 following a Design Basis Accident are determined based on the criteria of NUREG-1465 and this regulatory guide.

3D.4.2 Definitions

Definitions of terms used in this appendix are contained in the referenced standards and IEEE 100, "The Authoritative Dictionary of IEEE Standard Terms, Seventh Edition." Subsection 3D.4.5 clarifies the definitions of "life" (that is, design, shelf, and qualified life) as used in this methodology. The terms "design life" and "qualified life" have the meanings set forth in IEEE 323 and are used in the context of that standard.

3D.5.5.1.6 Chemical Environment

The high-energy line break test will include chemical injection during the first 24 hours of the test, to simulate the reactor coolant system fluid. Initial pH is from 4 to 4.5, with the solution consisting primarily of boric acid.

Since there is no caustic containment spray in the AP1000, subsequent adjustments in pH may not be necessary for all tests. Sump solution chemistry is adjusted by release of alkaline chemistry, which will rise to 7.0 to 9.5 within a few hours of containment flooding. These conditions are simulated for submerged equipment.

Margin in low pH value is not included, but is addressed by the continued injection through the first 24 hours. Margin in alkaline pH, where adjustment is necessary, is incorporated by a 10 percent increase in alkalinity.

3D.5.5.1.7 Submergence

Performance of equipment in a submerged condition is verified by a test that replicates the actual conditions with appropriate margin.

3D.5.5.2 High-Energy Line Break Accidents Outside Containment

For the majority of equipment located outside containment, the normal operating environment remains unchanged by a high-energy line break accident. As a consequence, qualification for such events is covered by qualification for normal conditions.

A limited amount of equipment located outside containment, near high-energy lines, could be subject to local hostile environmental conditions because of a high-energy line break outside containment. In this case, the equipment is qualified for the conditions resulting from events affecting its location and for which it is required to operate. Figure 3D.5-9 shows the combined design conditions for equipment that is required to perform throughout postulated events. Figure 3D.5-9 does not include margin from IEEE 323-1974, which will be incorporated in the environmental qualification programs. The maximum pressure for any event outside containment is 6 psig.

3D.6 Qualification Methods

NRC 261

The recognized methods available for qualifying safety-related electrical equipment are established in IEEE 323. These are type testing, ~~operating experience,~~ analysis, on-going qualification, or a combination of these methods. The choice of qualification method for a particular item of equipment is based upon many factors. These factors include practicability, size and complexity of equipment, economics, and availability of previous qualification to earlier standards.

NRC 261

The qualification method employed for each equipment type included under the AP1000 equipment qualification program is identified in the individual equipment qualification data packages whether by test (Attachment A, Section 3.0), analysis (Attachment A, Section 4.0), ~~experience (Attachment A, Section 5.0),~~ or by a combination of these methods. The AP1000

The mechanical equipment is considered qualified if subcomponents important to the safety function are acceptable.

Nonmetallic subcomponents not meeting the criteria must have a replacement interval specified to maintain the qualification of the affected equipment. The replacement interval is determined by analysis and documented.

3D.6.2.3.8 Equipment Qualification Maintenance Requirements

The maintenance requirements resulting from the activities described herein are identified. The qualification maintenance requirements are based on the following:

- Qualification evaluation results (for example, periodic replacement of age-susceptible parts before the end of their qualified lives)
- Equipment qualification-related maintenance activities derived from the qualification report(s)
- Vendor recommended equipment qualification maintenance. Vendor recommended maintenance is included if it is required in order to maintain qualification.

3D.6.2.3.9 Qualification Documentation

The qualification of the mechanical equipment to the postulated environments is documented in an auditable form. See subsection 3D.7.

3D.6.3 Operating Experience

NRC 261

Qualification by experience is ~~typically~~ not employed in the AP1000 equipment qualification program as a ~~prime~~ method of qualification. ~~Operating experience provides supportive evidence to the prime method of qualification. For those instances where seismic experience data are to be used, the Combined License applicant will provide documentation of the methodology. Where such information is provided, it is demonstrated that the experience is applicable to the safety-related functional requirements of the equipment. This demonstration of applicability includes an evaluation of operating environments, mountings, performance requirements, and performance history. Requirements for the documentation of qualification via experience are discussed in subsection 3D.7.6.~~

3D.6.4 On-Going Qualification

NRC 261

The AP1000 equipment qualification program may employ on-going qualification through special maintenance and surveillance activities. However, this method of qualification is not suitable as a sole means for qualifying equipment for design basis event conditions. On-going qualification, as a method, is used exclusively for safety-related equipment located in a mild environment area. Such use requires supplementary test, or analysis~~, or experience data~~ to address equipment operability and performance during and after a seismic design basis event.

Documentation requirements for qualification that includes on-going qualification as a method are developed to conform with NRC guidance provided in Regulatory Guide 1.33, Revision 2.

3D.6.5 Combinations of Methods

NRC 261

Qualification by a combination of the preceding methods may be~~is~~ used ~~whenever qualification by type test is not the sole basis of qualification~~ under the AP1000 equipment qualification program. ~~If analysis is used, justification includes identifying a test or experience bases, and addressing concerns related to departure from the required type test sequence.~~

3D.6.5.1 Use of Existing Qualification Reports

Pre-existing qualification programs and documents are used only if the seismic test program satisfies the guidelines of IEEE 344-1987 and the environmental qualification program satisfies the guidelines of IEEE 323-1974.

Qualification test and analysis reports conforming to those IEEE Standards, but not specifically performed to the AP1000 equipment qualification program parameters, may be acceptable as qualification bases. In such cases, supplementary qualification efforts described in subsections 3D.6.2, 3D.6.3, and 3D.6.4 of this appendix may be required to validate acceptability under the AP1000 equipment qualification program. Justifications are documented as analyses, and appear in equipment qualification data package, Section 4.0. (See Attachment A.)

3D.6.5.1.1 Aging

Past qualification tests may provide sufficient basis to preclude new aging simulation testing as part of the AP1000 program. Also, simulation of both electrical and mechanical operational cycling may be waived where existing data demonstrates equipment durability greatly in the excess of the estimated number of operating cycles for Class 1E service. Application of past qualification and other tests is considered in the development of test plans and analysis procedures. The bases and justification is provided in qualification documentation for cases where applicable aging parameters are omitted from the test sequence.

3D.6.5.1.2 Seismic

Seismic qualification generally relies on analyses and justification to verify the adequacy or applicability of generic testing to a particular installed configuration of similar equipment. Analytical methods and documentation guidelines of IEEE 344-1987, as supplemented by Regulatory Guide 1.100, Revision 2, address these needs. Attachment E of this appendix provides the AP1000 equipment qualification program requirements regarding seismic qualification.

3D.6.5.1.3 High-Energy Line Break Conditions

Typically, existing qualification tests address conditions of high-energy line break environments occurring inside containment. These are used where it is demonstrated that the qualification envelops the applicable requirements.

3D.7 Documentation

The AP1000 equipment qualification program documentation consists principally of three types of documents:

- "Methodology for Qualifying AP1000 Safety-Related Electrical and Mechanical Equipment" is the generic program "parent" document. It describes the methods and practices employed in the AP1000 equipment qualification program.

- Equipment qualification data packages are "daughter" documents to the methodology. Each is a summary of the qualification program for a specific equipment type (for example, a particular model or design series of a manufacturer, an as-provided system, or a family of equipment tested as a set). The equipment qualification data package defines the qualification program objectives, methods, applicable equipment performance specifications, and the qualification plan. It provides a summary of the results.

- Equipment Qualification Test Reports (EQTRs) are the reports that present specific methods used during the qualification process and the results of that process.

The equipment qualification data packages are developed separate from the parent document. Similarly, the equipment qualification test reports are developed separate from the equipment qualification data packages. Equipment qualification test reports used in the AP1000 equipment qualification program may include existing reports of testing or analysis that comply with the relevant aspects of this methodology. Information necessary to demonstrate the equipment's capability to perform its intended safety-related function(s) while exposed to normal, abnormal, accident, and post-accident environments is provided in or referenced by the equipment qualification data package. If maintenance, refurbishment, or replacement of the equipment is necessary to provide confidence in the equipment's capability to perform its safety function, this information is also included in the equipment qualification data package. Data, in raw form, cited in the equipment qualification data packages or equipment qualification test reports is available for audit for the life of the plant.

3D.7.1 Equipment Qualification Data Package

Attachment A contains sample of the equipment qualification data package format. Each equipment qualification data package consists of the following elements:

Section 1.0 – Specifications
Section 2.0 – Qualification Program
Section 3.0 – Qualification by Test
Section 4.0 – Qualification by Analysis
NRC 261 Section 5.0 – Qualification by Experience (Not Used)
Section 6.0 – Qualification Program Conclusions
Table 1 – Qualification Summary

The following paragraphs discuss the six sections in the equipment qualification data packages.

3D.7.4 Qualification by Test

Qualification by test is selected as the primary method of qualification for complex equipment not readily amenable to analysis or for equipment required to perform a safety-related function in a high-energy line break environment. The proposed test plan is identified in Section 3.0 of Attachment A. Where supportive analysis ~~or experience~~ is claimed as an integral part of the qualification program, cross reference is provided to Attachment A, Section 4.0 ~~or Section 5.0 or both~~ for those aspects of the qualification not covered by the test plan. The following sections establish the basis on which the information specified in Section 3.0 is selected.

NRC 261

3D.7.4.1 Specimen Description

The equipment qualified is identified, including the baseline design document number/reference, where applicable, the equipment type, manufacturer and model number, in Section 3.1 of Attachment A. When testing a model series (or equipment families), the representative items tested are clearly identified. The basis of their representation should be included.

Section 3.1 is primarily intended to identify test specimens used in a test supporting the qualification program. But it also discusses the specimens considered for other methods used in the qualification program.

3D.7.4.2 Number Tested

The test program is based upon selectively testing a representative number of components according to type, size, or other appropriate classification, on a prototype basis. The number of items of equipment representative of the equipment type that are tested is defined in Section 3.2 of Attachment A.

3D.7.4.3 Mounting

The method of mounting the equipment for the test is identified in Section 3.3 of Attachment A. The in-plant installation requirements, as specified by the supplier under Section 1.2 of Attachment A, are fully represented.

3D.7.4.4 Connections

The equipment connections necessary to demonstrate safety-related functional operability during testing are identified in Section 3.4 of Attachment A. This includes items that are part of the installed configuration, but are not part of the test apparatus.

Particularly important are items that are included by "practice of good workmanship," such as pipe thread sealant. Another example is the use of electrical connection sealing materials. Where these items are included in the testing, they become factors in the performance of the equipment, especially under aggressive or adverse environmental conditions. Their thermal degradation and sensitivity to irradiation and chemistry environments are considered in the qualification program, both for impact to equipment performance under harsh conditions and for their contribution to equipment qualified life.

- Description of operational settings used to demonstrate functional operability and any limitation imposed on them.

- Test records (for example, test response spectra, time history; accident transient parameters - temperature, pressure). This includes performance and operability test results, inspection results, and the monitored test and specimen and calibration records of instruments used.

- Record of compliance of test results with the seismic qualification criteria.

- Description of anomalies found during the test program, and their resolution(s).

Potential aging mechanisms resulting from significant in-service thermal, electrical, mechanical, radiation, and vibration sources are identified in subsection 3.9.3 of Attachment A. When aging is addressed as part of the test sequence, the method employed for aging the equipment is indicated and is chosen to conservatively simulate the potential aging effects resulting from the operating cycles and environmental conditions specified in Attachment A, Section 1.0. The methods employed to address each of the potential aging mechanisms are discussed.

3D.7.5 Qualification by Analysis

Qualification by this methodology does not rely solely on analyses. Generally, analysis is permitted to support qualification testing or to establish that testing of other sufficiently similar equipment can be cited to establish or extend the qualification of equipment covered by the equipment qualification data package.

The sample format for Section 4.0 of Attachment A is formatted to conform with the recommendations of IEEE 323-1974. Each subsection addresses a particular analysis if more than one is performed to support qualification. Not all subsections identified in the sample format apply to any particular analysis. Documentation of analyses demonstrating or supporting seismic qualification conforms with the guidelines of Attachment E and the recommendations of IEEE 344-1987.

3D.7.6 Qualification by Experience

NRC 261

This method of qualification is not used.~~When experience data are used for or in support of a qualification program, items relevant to its use are detailed in Attachment A, Section 5.0.~~

3D.7.7 Qualification Program Conclusions

Section 6.0 of Attachment A summarizes the conclusions of the qualification program, including and addressing methods employed and conditions upon which qualification of the equipment is based. Details regarding each aspect of simulated aging are addressed distinctly, with conclusions as to the life-limiting aspects clearly stated.

Conclusions for each design basis event are summarized. Generally, these are combined as either design basis event seismic and design basis event environmental.

3D.7.8 Combined License Information

NRC 261

This section is deleted.~~has no requirement for additional information to be provided in support of the Combined License application except for seismic experience qualification methodology if utilized.~~

3D.8 References

1. IEEE-323-1974, "IEEE Standard for Qualifying Class 1E Equipment for Nuclear Power Generating Stations."

2. IEEE-344-1987, "IEEE Recommended Practice for Seismic Qualification of Class 1E Equipment for Nuclear Power Generating Stations."

3. IEEE-627-1980, "IEEE Standard for Design Qualification of Safety System Equipment Used in Nuclear Power Generating Stations."

4. NUREG/CR-3156, "A Survey of the State-of-the-Art in Aging of Electronics with Application to Nuclear Plant Instrumentation."

5. EPRI NP-1558, Project 890-1, "A Review of Equipment Aging Theory and Technology."

6. NUREG/CR 2156, "Radiation Thermal Degradation of PE and PVC: Mechanism of Synergism and Dose Rate Effects," Clough and Gillen, June 1981.

7. NUREG/CR 2157, "Occurrence and Implication of Radiation Dose Rate Effects for Material Aging Studies," Clough and Gillen, June 1981.

8. NUREG-1465, "Accident Source Terms for Light-Water Nuclear Power Plants – Final Report," L. Soffer, et al., February 1995.

9. Regulatory Guide 1.183, “Alternative Radiological Source Terms for Evaluating Design Basis Accidents at Nuclear Power Reactors,” July 2000.

Note: See subsection 3D.4.1.1 for other IEEE references.

NRC 261

5.0 QUALIFICATION BY EXPERIENCE

This method of qualification is not used.~~The AP1000 EQ Program does not typically permit qualification solely on the basis of operating experience in support of the qualification program for the {equipment}. For those instances where seismic experience data are to be used, the COL will provide documentation of the methodology. Operating experience is used for or to supplement the qualification of {equipment} with respect to the following conditions {list with justification}.~~

E.4 Requirements

E.4.1 Damping

Damping level of a component or system describes its capability to dissipate vibrational energy during a seismic event. The damping level used defines the response magnitude of an ideal single degree of freedom linear oscillator when subjected to the specified input as documented by the required response spectrum (RRS) curve. The significance of the damping value used depends on whether qualification is by testing or analysis.

E.4.1.1 Testing

Equipment qualification by testing involves subjecting the base of the equipment to a representative seismic acceleration time history. The response characteristics of the equipment are a function of the inherent damping present in the equipment. In this case the damping value used (typically five percent) serves as a convenient means of showing the compliance of the test response spectrum (TRS) with the required response spectrum.

E.4.1.2 Analysis

In the case of qualification by analysis, the damping level used is representative of the damping actually present in the equipment. Unless other documented equipment damping data is available, the values specified in Table 3.7.1-1 of Chapter 3 are used.

E.4.2 Interface Requirements

As part of the seismic qualification program, consideration is given to the definition of the clearances needed around the equipment mounted in the plant to permit the equipment to move during a postulated seismic event without causing impact between adjacent pieces of safety-related equipment. This is done as part of seismic testing by measuring the maximum dynamic relative displacement of the top and bottom of the equipment.

When performing qualification by analysis, the relative motion is obtained as part of the analytical results. These motions are reported in the qualification report and are used to determine the required clearance between adjacent pieces of equipment.

In addition, the qualification program takes into account the restraining effect of other interfaces, such as cables and conduits attached to the equipment, which may change the dynamic response characteristic of the equipment. ~~(Also See Section E.7.2.)~~

NRC 261

E.4.3 Mounting Simulation

The mounting conditions simulated by analysis or during seismic test are representative of the equipment as-installed mounting conditions used for the AP1000 equipment. When an interfacing structure exists between the safety-related equipment being qualified and the floor or wall at which the equipment mounting required response spectrum is specified, its flexibility is simulated as part of the qualification program. If this is not done, justification must be provided,

NRC 261

demonstrating that the deviations in mounting conditions do not affect the applicability of qualification program. ~~(See also Section E.7.2.)~~

E.4.4 1/2 Safe Shutdown Earthquake

The AP1000 makes use of a small earthquake having the intensity of one-half of the safe shutdown earthquake at the safety-related equipment mounting location to simulate the fatigue effects of smaller earthquakes that may occur before the postulated safe shutdown earthquake. These small earthquakes correspond to the operating basis earthquakes (OBEs) referenced in IEEE 344-1987. When qualification by testing is used, five of these small earthquakes are used to vibrationally age the equipment before the safe shutdown earthquake. When qualification by analysis is used, two safe shutdown earthquake events are used to simulate the fatigue aging effects. Each event contains 10 peak cycles. These stress cycles are used to verify that the equipment is not subject to failure due to low cycle fatigue.

E.4.5 Safe Shutdown Earthquake

The safe shutdown earthquake required response spectrum curve defines the seismic qualification basis for each piece of safety-related equipment. The seismic level varies according to the mounting location of the equipment. When equipment qualification is based on testing, an additional 10 percent test acceleration margin is added as specified in IEEE 323-1974.

E.4.6 Other Dynamic Loads

Hydrodynamic loads are considered as part of the qualification program, where applicable.

E.5 Qualification by Test

Seismic qualification testing is the preferred method for electrical, mechanical, and electromechanical equipment. Seismic testing shall be performed and input generated as specified in IEEE 344-1987. The nature of the test input used depends on whether the equipment is hard mounted or line mounted. The test program consists of the following elements, as applicable: environmental aging, mechanical aging, vibrational aging, and safe shutdown earthquake testing. For those cases where the equipment is also subject to a loss of coolant or a high-energy line break accident, these accidents are simulated on the same qualification specimen after completion of the testing previously discussed. (See Sections 3D.4.4 and 3D.7.4.)

The characteristics of the required seismic and dynamic input motions should be specified by the response spectrum or time history methods. These characteristics, derived from the structures or systems seismic and dynamic analyses, should be representative of the input motions at the equipment mounting locations.

For seismic and dynamic loads, the actual test input motion should be characterized in the same manner as the required input motion, and the conservatism in amplitude and frequency content should be demonstrated (that is, the test response spectrum should closely resemble and envelop the required response spectrum over the critical frequency range).

as discussed in Section E.6.2. The applicable damping levels are noted in Table 3.7.1-1 of Chapter 3.

E.6.3.1 Response Spectrum Analysis

Modes up to and including the cutoff frequency are included in this summation. In some cases, the structure is basically rigid, with some of the flexible mode representing local effects. This situation is evaluated by reviewing the modal masses applicable to a given seismic input direction. If the sum of the effective modal masses used in the response spectrum analysis is greater than 0.9 times the total equipment mass, the model is assumed to adequately represent the total equipment mass. If this criterion is not satisfied, it means that a significant part of the equipment seismic response is due to the static seismic response of the higher equipment modes (above the cutoff frequency). If this situation occurs, the analyst determines the component of the response due to the higher modes and combines it with the flexible response component by square root sum of the squares. (This requirement is discussed in the SSAR, Subsection 3.7.2.)

E.6.3.2 Static Coefficient Method

As an alternative to the response spectrum method, the static coefficient method of analysis may be used. In this method the frequencies of the equipment are not determined, but a static analysis is performed, assuming that a peak acceleration equal to 1.5 times the peak spectral acceleration given in the applicable required response spectrum acts on the structure as described in subsection E.6.2.

The static coefficient of 1.5 takes into account the combined effects of multifrequency excitation and multimode response for equipment and structures that can be represented by a simple model. A lower static coefficient may be used when it can be demonstrated that it will yield conservative results.

E.6.3.3 Time History Analysis

The time-history method of analysis is the preferred method of analysis when the equipment exhibits significant nonlinear behavior or when it is necessary to generate response spectra for specific component mounting locations in the equipment. The acceptable methods that are used to develop the seismic time histories are discussed in Regulatory Guide 1.122, ASME Code, Section III, Appendix N, and in Section 6.2 of IEEE 344-1987. Other analytical methods may be used to generate in-equipment response spectra provided that they are verified to produce accurate and/or conservative results.

E.7 Qualification by Test Experience

This method of qualification is not used.

NRC 261

~~E.7.1 Introduction and Purpose~~

~~Section 9.0 of IEEE 344-1987 provides guidelines for seismic qualification using experience-based data. The qualification of equipment may be accomplished by justifying its similarity with previously qualified equipment which has been qualified at equal or more severe~~

~~seismic requirements. Similarity of equipment characteristics and of the excitation environment is established by techniques that can be technically justified. Differences in designs and manufacturing techniques must be considered as part of the technical justification supporting similarity.~~

~~The purpose of this section is to define the methodology for seismic qualification of equipment based on test experience-based data for a group of previously tested equipment in compliance with IEEE 344-1987. The sections that follow define the process to be employed to meet the experience-based requirements set forth in Section 9 of IEEE 344-1987 and provide descriptions of how the requirements will be met when performing test experience-based qualification.~~

~~E.7.2 IEEE 344-1987, Section 9.2: Experience Data~~

~~Section 9.2 of IEEE 344-1987 provides three sources for experience data. They are identified as follows:~~

~~1. Analysis or test data from previous qualification programs~~
~~2. Documented data from equipment in facilities that have experienced earthquakes~~
NRC 261 ~~3. Data from operating dynamic loading or other dynamic environments~~

~~Westinghouse may use existing test data or combined test and analysis qualifications as a basis for test experience-based qualification. Earthquake experience and/or operating dynamic loads are not considered as qualification approaches for the AP1000 safety-related equipment.~~

~~E.7.2.1 IEEE 344-1987, Section 9.2.1: Previous Qualification~~

~~Section 9.2.1 of IEEE 344-1987 states that existing dynamic and seismic qualification programs of equipment in the nuclear industry can be used to develop an experience database. The standards also indicate that to use an experience database, the input motions to which the equipment was previously qualified must have been clearly documented, together with pertinent qualification parameters, such as resonance frequencies, damping, and responses throughout the equipment.~~

~~Test programs of similar types of equipment will be used as the basis for qualification using the test experience-based approach. Only test programs where all identified requirements have been documented will be used.~~

~~E.7.2.2 IEEE 344-1987 Section 9.2.2: Earthquakes~~

~~This section will not be used.~~

~~E.7.2.3 IEEE 344-1987 Section 9.2.3: Other Experience~~

~~This section will not be used.~~

~~E.7.3 IEEE 344-1987 Section 9.3: Similarity~~

~~Section 9.3 of IEEE 344-1987 provides guidelines for showing similarity of candidate equipment and previously tested and qualified equipment. The standard identifies that the qualification process for equipment is comprised of the following basic factors:~~

~~1. Excitation~~
~~2. Physical system (dynamic properties and operability)~~
~~3. Dynamic response~~

~~Section 9.3 of IEEE 344-1987 identifies that the equipment qualification levels, experience response spectra (ERS) can be used to qualify similar equipment when the equipment seismic requirements are equal to or enveloped by the ERS. The standard also states that when at least two or more dynamically similar items have been qualified to different excitations, they may be both shown to be qualified to a composite ERS. The composite ERS may be used for qualification of candidate equipment.~~

~~The IEEE 344-1987 standard identifies the following four subsections in demonstrating similarity.~~

NRC 261

~~E.7.3.1. IEEE 344-1987 Section 9.3.1: Excitation~~

~~Similarity of excitation is described in Section 9.3.1. The section also identifies that test input shall be of at least 15 seconds of strong motion duration. Also, ½ SSE test levels are documented as part of experience data or lack of fatigue effects is justified.~~

~~To meet the above requirements and establish test experience input motions for tested equipment, the following requirements are met:~~

~~1. The test input motion is multifrequency and must meet the relevant requirements in the IEEE 344-1987 standard.~~

~~2. The test input motion is characterized by the test response spectra in the front-to-back, side-to-side, and vertical directions.~~

~~3. The test input is recorded at the mounting points of the equipment.~~

~~4. The test input motion has broadband response spectra shape with an amplified region of one octave or more. If the test response spectra of the equipment are narrowband, the peak spectral acceleration in the narrowband region is reduced by a factor of 0.7.~~

~~5. The test input motion is biaxial or triaxial. If equipment is susceptible to cross-coupling effects, a reduction factor of 0.7 is considered for a biaxial test response spectra.~~

~~E.7.3.2 IEEE 344-1987 Section 9.3.2: Physical Systems~~

~~Section 9.3.2 of the standard indicates that similarity can be established by comparing the pre-dominant resonant frequencies and mode shapes.~~

~~E.7.3.3 IEEE 344-1987 Section 9.3.3: Dynamic Response~~

~~Section 9.3.3 of the standard provides information to evaluate and extend the equipment physical response during testing to other similar systems.~~

~~To meet the requirements specified above and establish similarity of candidate equipment to tested equipment (physical systems and dynamic response), certain inclusion rules and prohibited features are applied to tested equipment and candidate equipment. This confirms that candidate equipment and tested equipment are similar and share a narrow range of physical, functional, dynamic characteristics, and electrical performance that have been demonstrated during testing. The inclusion rules and prohibited features are listed below. They are verified during the process of developing test experience-based composite ERS and establishing the qualification of candidate equipment based on test experience.~~

~~Inclusion Rules~~

NRC 261

~~a. Physical characteristics~~
~~b. Design details~~
~~c. Dynamic characteristics~~
~~d. Functions~~
~~e. Equipment type~~
~~f. Manufacturer~~
~~g. Weight~~
~~h. Structural and mechanical designs details~~
~~i. Design features~~
~~j. Size and shape~~
~~k. Vintage~~
~~l. Capacity rating~~
~~m. Load path~~
~~n. Mounting~~
~~o. Industry practices~~
~~p. Materials~~
~~q. Dominant natural frequencies~~
~~r. Moveable subassemblies~~
~~s. Attached items or components~~
~~t. Modifications~~

~~Prohibited Features~~

~~Prohibited features are design details, materials, construction features, or installation characteristics that have resulted in seismic weaknesses leading to the equipment being incapable of performing its intended safety function(s) or maintaining structural integrity. A list of related prohibited features based on testing is compiled and addressed. The bases for their resolution are explained. Failure data from other sources may also be considered and included in the prohibited features list. The list should also include prohibited features that would contribute to fatigue failure from low cycle loads from seismic activities.~~

~~E.7.3.4 IEEE 344-1987 Section 9.3.4: Operability~~

~~Section 9.3.4 indicates that experience data must provide documented evidence to support the demonstration of proper operability of the equipment during and after the seismic tests. The experience data provides sound evidence that the equipment performed as required in a similar electrical system.~~

~~This last requirement in Section 9 will be fulfilled by showing that the safety-related components on the candidate equipment are seismically tested and qualified in the existing test programs. If not, then additional seismic testing of the components to their seismic demands will be performed.~~

~~E.7.4 Process for Qualification of Candidate Equipment Based on Test Experience Data~~

~~The Westinghouse process for qualification of candidate equipment based on test experience data involves the following five steps:~~

- ~~Characterization of test motions experienced by the tested equipment~~
- ~~Establishment of the composite ERS based on the actual test inputs~~
- ~~Characterization of tested equipment~~
- ~~Comparison of candidate equipment to tested equipment~~
- ~~Documentation of the qualification process~~

NRC 261

~~The above requirements for the use of test experience for seismic qualification of equipment are met by the following:~~

- ~~The existing qualification programs and experience test data meet the requirements in IEEE 344-1987 standards.~~
- ~~The test excitation is at least 15 seconds of strong seismic motion, well documented in the existing test reports, and the qualification seismic levels are defined.~~
- ~~Similarity of the candidate equipment to tested and qualified equipment is demonstrated by showing the physical systems and their dominant natural frequencies to be similar.~~
- ~~The vibration aging seismic requirements and SSE RRS of the AP1000 should be enveloped by the respective composite ½ SSE and SSE ERS of the tested equipment over the frequency range of interest (typically 1-33 Hz). If the RRS is not enveloped, it must be justified.~~
- ~~The vibration aging seismic requirements and SSE RRS of the AP1000, used for comparison with respective composite ½ SSE and SSE ERS, are applicable to the in-structure response spectrum at the mounting location of the candidate equipment. This RRS, as defined in the qualification specification, shall be derived from the SSE. Peak-broadening to account for uncertainty or variation of location is permitted if the actual response spectrum at the mounting location is narrow banded.~~

- ~~The vibration aging seismic requirements and SSE RRS of the AP1000, used for comparison with the respective composite ½ SSE and SSE ERS, are computed for the same damping value as the composite ERS. Westinghouse uses 5% critical damping in the generation of TRS in seismic qualification test programs. When the damping values of the RRS and the composite ERS are different, additional guidance in subsection 5.3.2 of IEEE 344-1987 may be used for making the comparison.~~

- ~~The candidate equipment is within the inclusion rules of tested equipment.~~

- ~~The candidate equipment excludes the prohibited features of the tested equipment.~~

- ~~The safety function of the candidate equipment including the enclosed or attached devices or subassemblies, if applicable, during and/or after the earthquake is demonstrated by the tested equipment or additional test data.~~

- ~~The equipment mounting is shown similar or equivalent to the tested and qualified mounting configurations or is evaluated in accordance with the qualification specification requirements.~~

NRC 261

- ~~Since equipment capacity may change with vintage, candidate equipment of newer vintage than the tested equipment is evaluated for any significant changes in the design, materials, or fabrication that could reduce its seismic capacity compared to the tested equipment.~~

- ~~The qualification of the candidate equipment shall be documented in accordance with the requirements of IEEE 344-1987, Section 10.~~

~~E.7.5 Limitations~~

~~In addition, qualification using test experience is limited by the following considerations. If these limitations exist, then seismic qualification using other acceptable methods is considered.~~

1. ~~Some complex equipment — such as microprocessor-based systems, relays, and potentiometers — may be difficult to qualify using the experience-based method.~~

2. ~~Insufficient number of independent test items.~~

3. ~~For pressure boundary components, the capability of the component to perform the specified pressure-retaining functions in combination with an earthquake must be addressed separately using appropriate criteria.~~

4. ~~Applications that require equipment to be exposed to harsh environment or aging (e.g., IEEE Std 323), prior to or during an earthquake, require special consideration.~~

Table 3G.1-1 (Sheet 1 of 3)

SUMMARY OF MODELS AND ANALYSIS METHODS

Model	Analysis Method	Program	Type of Dynamic Response/Purpose
3D (ASB) solid-shell model	-	ANSYS	Creates the finite element mesh for the ASB finite element model.
3D (CIS) solid-shell model	-	ANSYS	Creates the finite element mesh for the CIS finite element model.
3D finite element model including shield building roof (ASB10)	-	ANSYS	ASB portion of NI10.
3D finite element model including dish below containment vessel	~~Response spectrum analysis~~	ANSYS	CIS portion of NI10. ~~To obtain SSE member forces for the containment internal structures.~~
3D finite element shell model of nuclear island [NI10] (coupled auxiliary and shield building shell model, containment internal structures, steel containment vessel, polar crane, RCL, pressurizer, and CMTs)	Mode superposition time history analysis	ANSYS	Performed for hard rock profile for ASB with CIS as superelement and for CIS with ASB as superelement. To develop time histories for generating plant design floor response spectra for nuclear island structures. To obtain maximum absolute nodal accelerations (ZPA) to be used in equivalent static analyses. To obtain maximum displacements relative to basemat. ~~To obtain maximum member forces and moments in selected elements for comparison to equivalent static results.~~
3D finite element coarse shell model of auxiliary and shield building and containment internal structures [NI20] (including steel containment vessel, polar crane, RCL, and pressurizer)	Mode superposition time history analysis	ANSYS	Performed for hard rock profile for comparisons against more detailed NI10 model.

NRC 219

NRC 219

Table 3G.1-1 (Sheet 1 of 3)

SUMMARY OF MODELS AND ANALYSIS METHODS

Model	Analysis Method	Program	Type of Dynamic Response/Purpose
3D (ASB) solid-shell model	-	ANSYS	Creates the finite element mesh for the ASB finite element model.
3D (CIS) solid-shell model	-	ANSYS	Creates the finite element mesh for the CIS finite element model.
3D finite element model including shield building roof (ASB10)	-	ANSYS	ASB portion of NI10.
NRC 011 NRC 041 3D finite element model including dish below containment vessel	Response spectrum analysis~~Equivalent static analysis using accelerations from time history analyses~~	ANSYS	CIS portion of NI10. To obtain SSE member forces for the containment internal structures.
NRC 011 NRC 041 NRC 011 NRC 041 NRC 011 NRC 041 3D finite element shell model of nuclear island [NI10] (coupled auxiliary and shield building ~~ASB~~ shell model, containment internal structures, steel containment vessel~~SCV~~, polar crane, RCL~~reactor coolant loop~~, pressurizer, and CMTs~~core makeup tanks~~)	Mode superposition time history analysis	ANSYS	Performed for hard rock profile for ASB with CIS as superelement and for CIS with ASB as superelement. To develop time histories for generating plant design floor response spectra for nuclear island structures. To obtain maximum absolute nodal accelerations (ZPA) to be used in equivalent static analyses. To obtain maximum displacements relative to basemat. To obtain maximum member forces and moments in selected elements for comparison to equivalent static results.

TR-134, Rev 0

NRC 011 NRC 041 NRC 011 NRC 041	3D finite element coarse shell model of auxiliary and shield building ~~ASB~~ and containment internal structures [NI20] (including steel containment vessel~~SCV~~, polar crane, RCL~~reactor coolant loop~~, and pressurizer)	Mode superposition time history analysis	ANSYS	Performed for hard rock profile for comparisons against more detailed NI10 model.

TR-134, Rev 0

Table 3G.1-1 (Sheet 2 of 3)

SUMMARY OF MODELS AND ANALYSIS METHODS

Model	Analysis Method	Program	Type of Dynamic Response/Purpose
Finite element lumped-mass stick model of nuclear island.	Time history analysis	SASSI	Performed 2D parametric soil studies to help establish the bounding generic soil conditions. ~~and to develop loads for overturning and stability evaluation.~~
Finite element lumped mass stick model of nuclear island.	Time history analysis	ANSYS	Performed 2D linear and non-linear seismic analyses to evaluate effect of lift off on Floor Response Spectra and bearing.
3D finite element coarse shell model of auxiliary and shield building and containment internal structures [NI20] (including steel containment vessel, polar crane, RCL, and pressurizer)	Time history analysis	SASSI	Performed for the five~~three~~ soil profiles of firm rock, soft rock, upper bound soft-to-medium soil, ~~and~~ soft-to-medium soil, and soft soil. To develop time histories for generating plant design floor response spectra for nuclear island structures. To obtain maximum absolute nodal accelerations (ZPA) to be used in equivalent static analyses. To obtain maximum displacements relative to basemat. To obtain maximum member forces and moments in selected elements for comparison to equivalent static results.
3D shell of revolution model of steel containment vessel	Model analysis; equivalent static analysis using accelerations from time history analyses	ANSYS	To obtain dynamic properties. To obtain SSE stresses for the containment vessel.
3D lumped-mass stick model of the SCV	-	ANSYS	Used in the NI10 and NI20 models.
3D lumped-mass stick model of the RCL	-	ANSYS	Used in the NI10 and NI20 models.
3D lumped-mass stick model of the pressurizer	-	ANSYS	Used in the NI10 and NI20 models.

NRC 219

NRC 219

Table 3G.1-1 (Sheet 2 of 3)

SUMMARY OF MODELS AND ANALYSIS METHODS

	Model	Analysis Method	Program	Type of Dynamic Response/Purpose
NRC 011 NRC 041	Finite element lumped-mass stick model of nuclear island.	Time history analysis	SASSI	Performed 2D parametric soil ~~structure interaction~~ studies to help establish the bounding generic soil conditions and to develop loads for overturning and stability evaluation.
	Finite element lumped mass stick model of nuclear island.	Time history analysis	ANSYS	Performed 2D linear and non-linear seismic analyses to evaluate effect of lift off on Floor Response Spectra and bearing.
NRC 011 NRC 041 NRC 011 NRC 041	3D finite element coarse shell model of auxiliary and shield building~~ASB~~ and containment internal structures [NI20] (including steel containment vessel~~SCV~~, polar crane, RCL~~reactor coolant loop~~, and pressurizer)	Time history analysis	SASSI	Performed for the three soil profiles of firm rock, upper bound soft-to-medium soil, and soft-to-medium soil. To develop time histories for generating plant design floor response spectra for nuclear island structures. To obtain maximum absolute nodal accelerations (ZPA) to be used in equivalent static analyses. To obtain maximum displacements relative to basemat. To obtain maximum member forces and moments in selected elements for comparison to equivalent static results.
NRC 011 NRC 041	3D shell of revolution model of steel containment vessel ~~SCV~~	Model analysis: equivalent static analysis using accelerations from time history analyses	ANSYS	To obtain dynamic properties. To obtain SSE stresses for the containment vessel.
	3D lumped-mass stick model of the SCV	-	ANSYS	Used in the NI10 and NI20 models.
NRC 011 NRC 041	3D lumped-mass stick model of the RCL~~reactor coolant loop~~	-	ANSYS	Used in the NI10 and NI20 models.
	3D lumped-mass stick model of the pressurizer	-	ANSYS	Used in the NI10 and NI20 models.

TR-134, Rev 0

Table 3G.1-1 (Sheet 3 of 3)

SUMMARY OF MODELS AND ANALYSIS METHODS

Model	Analysis Method	Program	Type of Dynamic Response/Purpose
Static Analyses			
3D lumped-mass stick model of the CMT	-	ANSYS	Used in the NI10 model.
3D lumped mass detailed model of the polar crane	Modal analysis	ANSYS	To obtain dynamic properties. Used with 3D finite element shell model of the containment vessel.
3D lumped mass simplified (single beam) model of the polar crane.		ANSYS	Used in the NI10 and NI20 models.
3D finite element shell model of containment vessel~~(1)~~	Mode superposition time history analysis Equivalent static analysis~~; response spectrum analysis.~~	ANSYS	Used with detailed polar crane model to obtain acceleration response of equipment hatch and airlocks. To obtain shell stresses in vicinity of the large penetrations of the containment vessel.
Static and Response Spectrum Analyses			
3D finite element refined shell model of nuclear island (NI05)	Equivalent static non-linear analysis using accelerations from time history analyses R~~r~~esponse spectrum analysis with seismic input enveloping all soils cases	ANSYS	To obtain SSE member forces for the nuclear island basemat. To obtain SSE member forces for the auxiliary and shield building and the containment internal structures. To obtain maximum displacements relative to basemat.
3D finite element coarse shell model of auxiliary and shield building and containment internal structures [NI20] (including steel containment vessel, polar crane, RCL, and pressurizer)	Mode superposition time history analysis with seismic input enveloping all soils cases	ANSYS	To obtain total basemat reactions for overturning and stability evaluation. To obtain total basemat reactions for comparison to reactions in equivalent static linear analyses using NI05 model.

NRC 219

NRC 219

Table 3G.1-1 (Sheet 3 of 3)

SUMMARY OF MODELS AND ANALYSIS METHODS

Model	Analysis Method	Program	Type of Dynamic Response/Purpose
Static Analyses			
3D lumped-mass stick model of the CMT~~core makeup tank~~	-	ANSYS	Used in the NI10 model.
3D lumped mass detailed model of the polar crane	Modal analysis	ANSYS	To obtain dynamic properties. Used with 3D finite element shell model of the containment vessel.
3D lumped mass simplified (single beam) model of the polar crane.		ANSYS	Used in the NI10 and NI20 models.
3D finite element shell model of containment vessel[(1)]	Mode superposition time history analysis; static analysis; response spectrum analysis.	ANSYS	Used with detailed polar crane model to obtain acceleration response of equipment hatch and airlocks. To obtain shell stresses in vicinity of the large penetrations of the containment vessel.
Static and Response Spectrum Analyses			
~~3D finite element refined shell model of ASB (ASB05)~~	~~Equivalent static analysis using accelerations from time history analyses~~	~~ANSYS~~	~~To obtain SSE member forces for the ASB.~~
~~3D finite element model of the shield building roof~~	~~Equivalent static analysis using accelerations from time history analyses~~	~~GT STRUDL~~	~~To obtain SSE member forces for the shield building roof.~~
3D finite element refined shell model of nuclear island (NI05)	Equivalent static non-linear analysis using accelerations from time history analyses; response spectrum analysis	ANSYS	To obtain SSE member forces for the nuclear island basemat.

NRC 011
NRC 041
NRC 011
NRC 041
NRC 011
NRC 041
NRC 169
NRC 011
NRC 041

TR-134, Rev 0

Table 3G.1-2

SUMMARY OF DYNAMIC ANALYSES AND COMBINATION TECHNIQUES

	Model	Analysis Method	Program	Three Components Combination	Modal Combination
NRC 219	~~3D lumped-mass stick, fixed base models~~	~~Mode superposition time history analysis~~	~~ANSYS~~	~~Algebraic Sum~~	~~n/a~~
NRC 219	3D finite element, fixed base models, coupled auxiliary and shield building~~ASB~~ shell model, with superelement of containment internal structures (NI10 and NI20)	Mode superposition time history analysis	ANSYS	Algebraic Sum	n/a
	3D finite element nuclear island model (NI20)	Complex frequency response analysis	SASSI	Algebraic Sum	n/a
NRC 219	3D finite element, fixed base models, coupled auxiliary and shield building~~ASB~~ and containment internal structures including shield building roof (NI05)	Response spectrum analysis~~Equivalent static analysis using nodal accelerations from 3D stick model~~	ANSYS	SRSS or 100%, 40%, 40%	Lindley-Yow~~n/a~~
NRC 219	3D finite element model of the nuclear island basemat (NI05)	Equivalent static analysis using nodal accelerations from shell~~3D stick~~ model	ANSYS	100%, 40%, 40%	n/a
	3D shell of revolution model of Steel Containment Vessel	Equivalent static analysis using nodal accelerations from 3D stick model	ANSYS	SRSS or 100%, 40%	n/a
NRC 219	~~3D finite element model of the shield building roof~~	~~Equivalent static analysis using nodal accelerations from 3D stick model~~	~~ANSYS GT STRUDL~~	~~SRSS~~	~~n/a~~
	PCS valve room and miscellaneous steel frame structures, miscellaneous flexible walls, and floors	Response spectrum analysis	ANSYS	SRSS or 100%, 40%, 40%	Grouping or Lindley-Yow
NRC 219	2D stick model analyses with lift off	Direct integration time history	ANSYS	Algebraic Sum	n/a

support plate design. All tubes in the steam generator are accessible for sleeving, if necessary. The design enhancements are based on proven technology.

The basic function of the AP1000 steam generator is to transfer heat from the single-phase reactor coolant water through the U-shaped heat exchanger tubes to the boiling, two-phase steam mixture in the secondary side of the steam generator. The steam generator separates dry, saturated steam from the boiling mixture, and delivers the steam to a nozzle from which it is delivered to the turbine. Water from the feedwater system replenishes the steam generator water inventory by entering the steam generator through a feedwater inlet nozzle and feedring.

In addition to its steady-state performance function, the steam generator secondary side provides a water inventory which is continuously available as a heat sink to absorb primary side high temperature transients.

5.1.3.3 Reactor Coolant Pumps

NRC 216

The AP1000 reactor coolant pumps are high-inertia, high-reliability, low-maintenance, sealless pumps of ~~either~~ canned motor ~~or wet winding motor~~ design that circulate the reactor coolant through the reactor vessel, loop piping, and steam generators. The pumps are integrated into the steam generator channel head.

The integration of the pump suction into the bottom of the steam generator channel head eliminates the cross-over leg of coolant loop piping; reduces the loop pressure drop; simplifies the foundation and support system for the steam generator, pumps, and piping; and reduces the potential for uncovering of the core by eliminating the need to clear the loop seal during a small loss of coolant accident.

The AP1000 design uses four pumps. Two pumps are coupled with each steam generator.

NRC 216

Each AP1000 reactor coolant pump is a vertical, single-stage centrifugal pump designed to pump large volumes of main coolant at high pressures and temperatures. Because of its sealless design, it is more tolerant of off-design conditions that could adversely affect shaft seal designs. The main impeller attaches to the rotor shaft of the driving motor, which is an electric induction motor. The stator and rotor of the motor are both encased in corrosion-resistant cans constructed and supported to withstand full system pressure.

Primary coolant circulates between the stator and rotor which obviates the need for a seal around the motor shaft. Additionally, the motor bearings are lubricated by primary coolant. The motor is thus an integral part of the pump. The basic pump design has been proven by many years of service in other applications.

The pump motor size is minimized through the use of a variable frequency drive to provide speed control in order to reduce motor power requirements during pump startup from cold conditions. The variable frequency drive is used only during heatup and cooldown when the reactor trip breakers are open. During power operations, the drive is isolated and the pump is run at constant speed.

5.2 Integrity of Reactor Coolant Pressure Boundary

This section discusses the measures to provide and maintain the integrity of the reactor coolant pressure boundary (RCPB) during plant operation. Section 50.2 of 10 CFR 50 defines the reactor coolant pressure boundary as vessels, piping, pumps, and valves that are part of the reactor coolant system (RCS), or that are connected to the reactor coolant system up to and including the following:

- The outermost containment isolation valve in system piping that penetrates the containment
- The second of two valves closed during normal operation in system piping that does not penetrate containment
- The reactor coolant system overpressure protection valves

The design transients used in the design and fatigue analysis of ASME Code Class 1 and Class CS components, supports, and reactor internals are provided in subsection 3.9.1. The loading conditions, loading combinations, evaluation methods, and stress limits for design and service conditions for components, core support structures, and component supports are discussed in subsection 3.9.3.

The term reactor coolant system, as used in this section, is defined in Section 5.1. The AP1000 reactor coolant pressure boundary is consistent with that of 10 CFR 50.2.

5.2.1 Compliance with Codes and Code Cases

5.2.1.1 Compliance with 10 CFR 50.55a

Reactor coolant pressure boundary components are designed and fabricated in accordance with the ASME Boiler and Pressure Vessel Code, Section III. A portion of the chemical and volume control system inside containment that is defined as reactor coolant pressure boundary uses an alternate classification in conformance with the requirements of 10 CFR 50.55a(a)(3). Systems other than the reactor coolant system connecting to the chemical and volume control system have required isolation and are not classified as reactor coolant pressure boundary. The alternate classification is discussed in Section 5.2.1.3. The quality group classification for the reactor coolant pressure boundary components is identified in subsection 3.2.2. The quality group classification is used to determine the appropriate sections of the ASME Code or other standards to be applied to the components.

The edition and addenda of the ASME Code applied in the design and manufacture of each component are the edition and addenda established by the requirements of the Design Certification. The use of editions and addenda issued subsequent to the Design Certification is permitted or required based on the provisions in the Design Certification. [*The baseline used for the evaluations done to support this safety analysis report and the Design Certification is the 1998 Edition, 2000 Addenda, except for piping design as follows:*

NRC 270

The 1989 Edition, 1989 Addenda is used for Articles NB-3200, NB-3600, NC-3600, and ND-3600 in lieu of later editions and addenda for piping design.

NRC 270

5.2.3.4 Fabrication and Processing of Austenitic Stainless Steel

Subsections 5.2.3.4.1 through 5.2.3.4.5 address Regulatory Guide 1.44, "Control of the Use of Sensitized Stainless Steel," and present the methods and controls to avoid sensitization and to prevent intergranular attack (IGA) of austenitic stainless steel components. Also, subsection 1.9.1 indicates the degree of conformance with Regulatory Guide 1.44.

5.2.3.4.1 Cleaning and Contamination Protection Procedures

Austenitic stainless steel materials used in the fabrication, installation, and testing of nuclear steam supply components and systems are handled, protected, stored, and cleaned according to recognized, accepted methods designed to minimize contamination that could lead to stress corrosion cracking. The procedures covering these controls are stipulated in process specifications. Tools used in abrasive work operations on austenitic stainless steel, such as grinding or wire brushing, do not contain and are not contaminated with ferritic carbon steel or other materials that could contribute to intergranular cracking or stress-corrosion cracking.

These process specifications supplement the equipment specifications and purchase order requirements of every individual austenitic stainless steel component or system procured for the AP1000, regardless of the ASME Code classification.

NRC 271 The process specifications define these requirements and follow the guidance of ASME NQA-1~~2~~.

Subsection 1.9.1 indicates the degree of conformance of the austenitic stainless steel components of the reactor coolant pressure boundary with Regulatory Guide 1.37, "Quality Assurance Requirements for Cleaning of Fluid Systems and Associated Components of Water-Cooled Nuclear Power Plants."

5.2.3.4.2 Solution Heat Treatment Requirements

The austenitic stainless steels listed in Tables 5.2-1 are used in the final heat-treated condition required by the respective ASME Code, Section II, materials specification for the particular type or grade of alloy.

5.2.3.4.3 Material Testing Program

Austenitic stainless steel materials of product forms with simple shapes need not be corrosion-tested provided that the solution heat treatment is followed by water quenching. Simple shapes are defined as plates, sheets, bars, pipe, and tubes, as well as forgings, fittings, and other shaped products that do not have inaccessible cavities or chambers that would preclude rapid cooling when water-quenched. This characterization of cavities or chambers as inaccessible is in relation to the entry of water during quenching and is not a determination of the component accessibility for inservice inspection.

When testing is required, the tests are performed according to a process specification following the guidelines of ASTM A 262, Practice A or E.

5.3.2.4 Special Controls for Ferritic and Austenitic Stainless Steels

Welding of ferritic steels and austenitic stainless steels is discussed in subsection 5.2.3. Subsection 5.2.3 includes discussions on the degree of conformance with Regulatory Guide 1.44. Section 1.9 discusses the degree of conformance with Regulatory Guides, including 1.31 and 1.34 (if applicable), as well as 1.37, 1.43, 1.50, 1.71, and 1.99.

5.3.2.5 Fracture Toughness

Assurance of adequate fracture toughness of ferritic materials in the reactor vessel (ASME Code, Section III, Class 1 component) is provided by compliance with the requirements for fracture toughness testing included in NB-2300 to Section III of the ASME Code and Appendix G of 10 CFR 50.

The initial Charpy V-notch minimum upper shelf fracture energy levels for the reactor vessel beltline base metal transverse direction and welds are 75 foot-pounds, as required by Appendix G of 10 CFR 50. The vessel fracture toughness data are given in Table 5.3-3. The AP1000 end-of-life RT_{NDT} and upper shelf energy projections were estimated using Regulatory Guide 1.99 for the end-of-life neutron fluence at the 1/4-thickness (T) and ID reactor vessel locations.

5.3.2.6 Material Surveillance

In the surveillance program, the evaluation of radiation damage is based on pre-irradiation testing of Charpy V-notch and tensile specimens and postirradiation testing of Charpy V-notch, tensile, and 1/2-T compact tension (CT) fracture mechanics test specimens. The program is directed toward evaluation of the effect of radiation on the fracture toughness of reactor vessel steels based on the transition temperature approach and the fracture mechanics approach. The program conforms to ASTM E-185~~,~~ (Reference 1) and 10 CFR 50, Appendix H.

NRC 215

The reactor vessel surveillance program incorporates eight specimen capsules. The capsules are located in guide baskets welded to the outside of the core barrel as shown in Figure 5.3-4 and positioned directly opposite the center portion of the core. The capsules can be removed when the vessel head is removed. To meet the guidelines of ASTM E-185 (lead factors less than three), the specimen guide baskets are located azimuthally near the lowest fluence locations at 135, 225, and 315 degrees. The 45 degree location is also a low fluence azimuthal location; however, there is a Roto-Lock insert for the internals lifting rig, which would prevent access for removal of the capsules from the baskets. Therefore, there are no guide baskets at the 45 degree location. Eight specimen capsules are provided by including three guide baskets at the 135 and 315 degree azimuthal locations and two baskets at the 225 degree location.

NRC 215

The capsules contain reactor vessel weld metal, base metal, and heat-affected zone metal specimens. The base metal specimens are oriented both parallel and normal (longitudinal and transverse) to the principal rolling direction of the limiting base material located in the core region of the reactor vessel. The 8 capsules contain 72 tensile specimens, 480 Charpy V-notch specimens, and 48 compact tension specimens. Archive material sufficient for two additional capsules and heat-affected-zone (HAZ) materials is retained.

Dosimeters, as described below, are placed in filler blocks drilled to contain them. The dosimeters permit evaluation of the flux seen by the specimens and the vessel wall. In addition, thermal monitors made of low melting point alloys are included to monitor the maximum temperature of the specimens. The specimens are enclosed in a tight-fitting stainless steel sheath to prevent corrosion and ensure good thermal conductivity. The complete capsule is helium leak tested. As part of the surveillance program, a report of the residual elements in weight percent to the nearest 0.01 percent is made for surveillance material and as deposited weld metal. Each of the eight capsules contains the specimens shown in Table 5.3-4.

The following dosimeters and thermal monitors are included in each of the eight capsules:

- Dosimeters
  - Iron
  - Copper
  - Nickel
  - Cobalt-aluminum (0.15-percent cobalt)
  - Cobalt-aluminum (cadmium shielded)
  - Uranium-238 (cadmium shielded)
  - Neptunium-237 (cadmium shielded)
- Thermal Monitors
  - 97.5-percent lead, 2.5-percent silver, (579°F melting point)
  - 97.5-percent lead, 1.75-percent silver, 0.75-percent tin (590°F melting point)

The fast neutron exposure of the specimens occurs at a faster rate than that experienced by the vessel wall, with the specimens being located between the core and the vessel. Since these specimens experience accelerated exposure and are actual samples from the materials used in the vessel, the transition temperature shift measurements are representative of the vessel at a later time in life. The lead factors for the eight specimen capsule locations based on the reference neutron flux distribution (flux distribution that results in the maximum fluence on the reactor vessel inner surface) vary between approximately 1.8 and 2.3. These lead factors will change over the life of the plant due to changes in core design and operating parameters. Data from CT fracture toughness specimens are expected to provide additional information for use in determining allowable stresses for irradiated material.

NRC 215

Correlations between the calculations and measurements of the irradiated samples in the capsules, assuming the same neutron spectrum at the samples and the vessel inner wall, are described in subsection 5.3.2.6.1. The anticipated degree to which the specimens perturb the fast neutron flux and energy distribution is considered in the evaluation of the surveillance specimen data. Verification and possible readjustment of the calculated wall exposure is made by the use of data on capsules withdrawn. The recommended program schedule for removal of the capsules for post-irradiation testing includes five capsules to be withdrawn instead of four as specified in ASTM E-185 (Reference 1) and Appendix H of 10 CFR 50. The following is the recommended withdrawal schedule of capsules for AP1000.

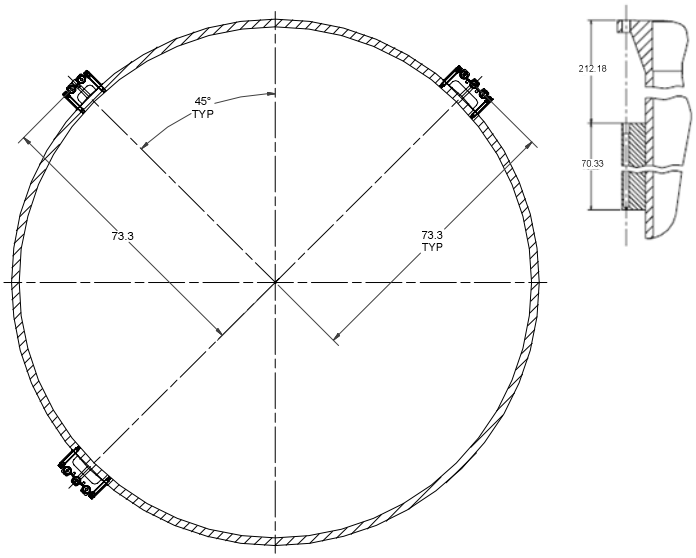

NRC 215

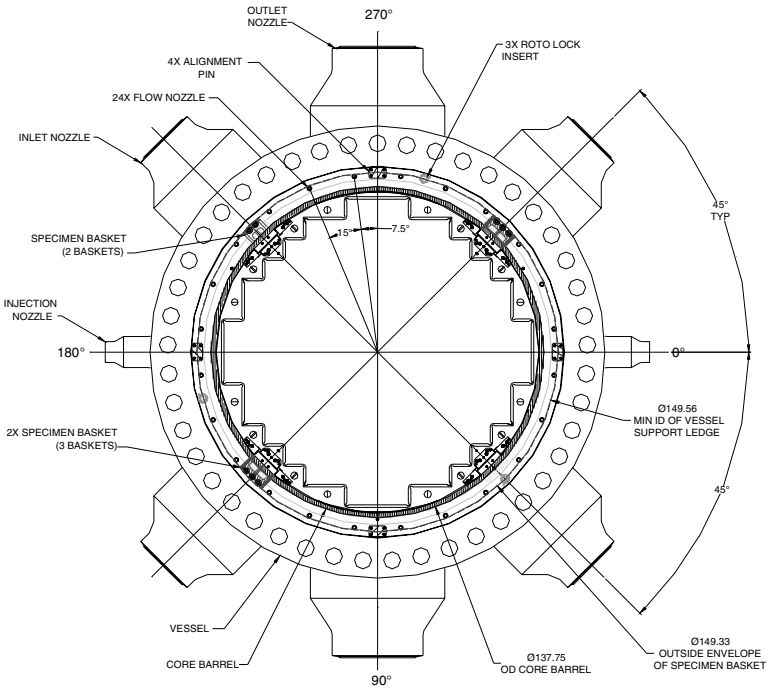

SECTION SHOWING
MODIFIED DESIGN
(3 SPECIMEN BASKETS
AT 45 DEG FROM 0-180)

Figure 5.3-4

AP1000 Reactor Vessel Surveillance Capsules Locations

5.4 Component and Subsystem Design

5.4.1 Reactor Coolant Pump Assembly

5.4.1.1 Design Bases

The reactor coolant pump (RCP) is an integral part of the reactor coolant pressure boundary. It is designed, fabricated, erected, and tested to quality standards consistent with the requirements set forth in 10 CFR 50, 50.55a and General Design Criterion 1. The reactor coolant pump casing and stator shell provide a barrier to the release of reactor coolant and other radioactive materials to the containment atmosphere.

The reactor coolant pump provides an adequate core cooling flow rate for sufficient heat transfer to maintain a departure from nucleate boiling ratio (DNBR) greater than the limit established in the safety analysis. Pump assembly rotational inertia is provided by a flywheel (inside the pump pressure boundary) motor rotor, and other rotating parts. This rotational inertia provides flow during coastdown conditions. This forced flow following an assumed loss of electrical power and the subsequent natural circulation effect in the reactor coolant system (RCS) adequately cools the core. The net positive suction head (NPSH) required for operation is by conservative pump design always less than that available by system design and operation.

The reactor coolant pump pressure boundary shields the balance of the reactor coolant pressure boundary from theoretical worst-case flywheel failures. The reactor coolant pump pressure boundary is analyzed to demonstrate that a fractured flywheel cannot breach the reactor coolant system boundary (impacted pressure boundary components are stator closure, stator main flange, and lower stator flange) and impair the operation of safety-related systems or components. This meets the requirements of General Design Criteria 4. The reactor coolant pump flywheel is designed, manufactured, and inspected to minimize the potential for the generation of high-energy fragments (missiles) under any anticipated operating or accident condition consistent with the intent of the guidelines set forth in Standard Review Plan Section 5.4.1.1 and Regulatory Guide 1.14. Each flywheel is tested at an overspeed condition to verify the flywheel design and construction.

5.4.1.2 Pump Assembly Description

5.4.1.2.1 Design Description

NRC 216

[*The reactor coolant pump is a single–-stage, hermetically sealed, high-inertia, centrifugal sealless pump of ~~either~~ canned motor ~~or wet winding~~ design.*]* It pumps large volumes of reactor coolant at high pressures and temperature. Figure 5.4-1 shows a reactor coolant pump. Table 5.4-1 gives the design parameters.

A reactor coolant pump is directly connected to each of two outlet nozzles on the steam generator channel head. The two pumps on a steam generator turn in the same direction.

A sealless pump contains the motor and all rotating components inside a pressure vessel. The pressure vessel consists of the pump casing, stator closure, stator main flange, stator shell, stator lower flange, and stator cap, which are designed for full reactor coolant system pressure. In a

NRC 216

*NRC Staff approval is required prior to implementing a change in this information; see DCD Introduction Section 3.5.

canned motor pump, the stator and rotor are encased in corrosion-resistant cans that prevent contact of the rotor bars and stator windings by the reactor coolant. ~~In a wet winding motor pump, the rotor is isolated from the reactor coolant while the windings are individually encased in protective insulation.~~ Because the shaft for the impeller and rotor is contained within the pressure boundary, seals are not required to restrict leakage out of the pump into containment. The connection between the pump casing and the stator closure is~~may be~~ provided with a welded canopy type seal assembly, which provides definitive leak protection for the pump closure. ~~If the canopy seal is used, a~~Access to the internals of the pump and motor is by severing the canopy seal weld. When the pump is reassembled, a canopy seal is rewelded. Canned motor~~Sealless~~ reactor coolant pumps have a long history of safe, reliable performance in military and commercial nuclear plant service.

NRC 216

NRC 216

The reactor coolant pump driving motor is a vertical, water-cooled, squirrel-cage induction motor with a canned rotor and stator. It is designed for removal from the casing for inspection, maintenance, and replacement, if required. The stator can ~~or insulation~~ protects the stator (windings and insulation) from the controlled portion of the reactor coolant circulating inside the motor and bearing cavity. The can on the rotor isolates the copper rotor bars ~~are isolated~~ from the system and~~to~~ minimizes the potential for the copper to plate out in other areas.

NRC 216

NRC 216

The motor is cooled by primary reactor coolant system coolant circulating through the motor cavity and by component cooling water circulating through a cooling jacket on the outside of the motor housing. Primary coolant used to cool the motor enters the lower end of the rotor and passes axially through the motor cavity to remove heat from the rotor and stator. An auxiliary impeller provides the motive force for circulating the coolant. Heat from the primary coolant is transferred to component coolant water in an external heat exchanger.

Each pump motor is driven by a variable speed drive, which is used for pump startup and operation when the reactor trip breakers are open. When the reactor trip breakers are closed, the variable frequency drives are bypassed and the pumps run at constant speed.

Flywheel assemblies provide rotating inertia that increases the coastdown time for the pump. Each flywheel assembly is of bi-metallic design consisting of a tungsten heavy metal alloy for mass with Type 403~~and~~ stainless steel and 18 Ni maraging steel structural components. The upper flywheel assembly is located between the motor and pump impeller. ~~If required, t~~The lower assembly is located below the canned motor with thrust bearing. Surrounding the flywheel assemblies are the heavy walls of the stator closure, casing, thermal barrier, or stator lower flange.

NRC 216

The materials in contact with the reactor coolant and cooling water (with the exception of the bearing material) are austenitic stainless steel, nickel-chromium-iron alloy, or equivalent corrosion-resistant material.

There are two j~~J~~ournal bearings, one at the bottom of the rotor shaft and the other between the upper flywheel assembly and the motor ~~are provided as necessary based on rotor dynamics analyses~~. The bearings are a hydrodynamic film-riding design. During rotor rotation, a thin film of water forms between the journal and pads, providing lubrication.

NRC 216

5.4.1.3 Design Evaluation

5.4.1.3.1 Pump Performance

The reactor coolant pump is sized to deliver a flow rate that equals or exceeds the required flow rate. Testing prior to plant startup confirms the total delivery capability of the reactor coolant pump. See Section 14.2. Thus, adequate forced circulation coolant flow is confirmed prior to initial plant operation.

The required net positive suction head is provided with ample margin to provide operational integrity and minimize the potential for cavitation. The AP1000 does not require reactor coolant pump operation to achieve safe shut down. Minimum net positive suction head requirements are not required to provide safe operation of the AP1000.

5.4.1.3.2 Overspeed Conditions

Reactor coolant pump overspeed can be postulated for either a fault in the connected electrical system that results in an increase in the frequency of the supplied current or due to a pipe rupture which results in an increase in the flow through the pump as the coolant exits the pipe.

For grid disconnect transients or turbine trips actuated by either the reactor trip system or the turbine protection system, the turbine overspeed control system acts to limit the reactor coolant pump overspeed. The turbine control system acts to rapidly close the turbine governor and intercept valves.

An electrical fault requiring immediate generator trip (with resulting turbine trip) will result in an overspeed condition in the electrically coupled reactor coolant pump no greater than that described previously for the grid disconnect/turbine trip transient.

Pump overspeed from high coolant flow rates associated with pipe rupture events are mitigated by the inertia of the pump, flywheel, and motor and by the connection of the motor to the electrical grid. Because of the application of mechanistic pipe break criteria, dynamic effects such as pump overspeed are not evaluated for breaks in piping in which leak-before-break is demonstrated.

5.4.1.3.3 Pressure Boundary Integrity

The pressure boundary integrity is verified for normal, anticipated transients, and postulated accident conditions. The pressure boundary components (pump casing, stator closure, stator main flange, stator shell, stator lower flange, stator cap, and external piping and tube side of the external heat exchanger) meet the requirements of the ASME Boiler and Pressure Vessel Code, Section III. These components are designed, analyzed, and tested according to the requirements in Paragraph NB-3400 of the ASME Code, Section III. Wells provided for resistance temperature detectors, differential pressure taps, and speed sensor penetrations also satisfy the requirements of the ASME Code, Section III.

NRC 216 ~~For the canned motor design, t~~The motor terminals form part of the pressure boundary in the event of a stator-can failure. The ASME Code does not include criteria or methods for completely designing or analyzing such terminals. Motor terminals are designed, analyzed, and tested using

criteria established and validated based on many years of service. Where applicable, ASME Code requirements and criteria are used. Individual terminals are hydrostatically tested to test the integrity prior to performance testing.

NRC 216 ~~For the wet winding design, the cable penetrations are designed as part of the pressure boundary. These penetrations are designed to be self-sealing and include redundant sealing features.~~

5.4.1.3.4 Coastdown Capability

It is important to reactor protection that the reactor coolant continues to flow for a time after reactor trip and loss of electrical power. To provide this flow, each reactor coolant pump has a high-density flywheel and high-inertia rotor. The rotating inertia of the pump, motor, and flywheel is used during the coastdown period to continue the reactor coolant flow. The reactor coolant pump is designed for the safe shutdown earthquake. The coastdown capability of the pump is maintained even for the case of loss of offsite and onsite electrical power coincident with the safe shutdown earthquake. Core flow transients and figures are provided in subsections 15.3.1 and 15.3.2.

A loss of component cooling water has no impact on coastdown capability. The reactor coolant pump can operate without cooling water until a safety-related pump trip occurs on high bearing water temperature. This prevents damage that could potentially affect coastdown.

The reactor trip system maintains the pump operation within the assumptions used for loss of coolant flow analyses. This also provides that adequate core cooling is provided to permit an orderly reduction in power if flow from a reactor coolant pump is lost during operation.

The reactor coolant pump coastdown occurs on a power loss to the plant. The following conditions are assumed to occur simultaneously:

- Reactor coolant system at normal operation temperature and pressure,
- Loss of cooling water,
- Loss of pump power,
- Reactor trip

NRC 216 If the stator can ~~or winding insulation~~ should leak during operation, the reactor coolant may cause a short in the stator windings. In such a case, the result would be the same as a loss of power to

NRC 216 that pump. With either a rotor or a stator can ~~or stator insulation~~ failure, no fluid would be lost to the containment.

5.4.1.3.5 Bearing Integrity

The design requirements for the reactor coolant pump bearings provide long life with negligible wear. The vibration warning level and high-vibration level alarm set-points are, in part, based on evaluation of the effect of vibration on bearing life.

The bearings provide adequate stiffness to control shaft motion, protect the pump impeller and shaft labyrinths from wear, and avoid contact between the motor stator and rotor. The bearing loads are maintained within the load capabilities of hydrodynamic journal bearings even under the

severe conditions experienced during seismic events. The bearing/shaft design and loadings are established by analysis and testing.

The frame vibration detectors provide indication of bearing performance. Control room indicators and alarms provide indication for operator action.

The bearing cooling provisions include a temperature monitoring system. The system operates continuously and has at least four redundant indicators per pump. Upon initiation of failure, the system indicates and alarms in the control room as a high bearing temperature. This requires pump shutdown. If these indications are ignored the pump trips when the high temperature setpoint is reached.

5.4.1.3.6 Integrity of Rotating Components

The rotating components of the pump and motor are analyzed for dynamic characteristics, including natural frequencies, stability, and forced responses to normal operation loads, and for several postulated fault conditions associated with the rotating masses. The fault conditions include seized rotor events, and integrity of the rotating components, including the flywheel.

5.4.1.3.6.1 Natural Frequency and Critical Speeds

The damped natural frequency of the reactor coolant pump rotating assembly is greater than 120 percent of the normal operating speed.

NRC 216 Determination of the damped natural frequency of the reactor coolant pump rotor bearing system model includes the effects of the bearing films, can ~~or winding~~ annular fluid interaction, motor magnetic phenomena, and pump structure. The damped natural frequencies for the AP1000 reactor coolant pump exhibit sufficient energy dissipation to be stable. The high degree of damping provides smooth pump operation.

The pump is analyzed for the response of the rotor and stator to external forcing functions. The support and connection of the pump to the steam generator and piping are considered in the analysis. The responses are evaluated using criteria including critical loads, stress deformation, wear, and displacement limits to establish the actual system critical speeds.

5.4.1.3.6.2 Rotor Seizure

The design of the pump is such as to preclude the instantaneous stopping of any rotating component of the pump or motor. The rotating inertia and power supplied to the motor would overcome interference between the impeller, bearings, flywheel assemblies, motor rotor, or rotor can and the surrounding components for a period of time. A change in the condition of any of the components sufficient to cause an interference would be indicated by the instrumentation monitoring speed, vibration, temperature, or current.

The reactor coolant system and reactor coolant pump are analyzed for a locked rotor event. To analyze the mechanical and structural effects of a rapid slow down of the rotating assembly, a failure of the rotating assembly is postulated that results in deformation that causes an interference with the surrounding reactor coolant pump components. For such an interference, the pump and

motor are postulated to come to a complete stop in a very short time period. This assumption bounds other postulated mechanisms for a rapid slowdown of the rotor, including impeller rub and rotor or stator can failure. The connection of the pump with the steam generator and discharge piping is analyzed for the vibration of the pump, hydraulic effects, and the torque due to the rapid slow down of the rotating assembly. The stresses in the pump casing, motor housing, steam generator channel head, and piping are analyzed using ASME Code, Section III, Service Level D limits for this condition.

The transient analysis of thermal and hydraulic effects of a postulated locked rotor event is based on a nonmechanistic, instantaneous stop of the impeller. This conservative assumption bounds any slower stop and provides a comparison with the same analysis done for other nuclear power plants. The transient analysis considers the effect of the locked rotor on the reactor core and the reactor coolant system pressure. The results of the transient analysis are found in Chapter 15 and show that the reactor coolant system pressure does not exceed the system design pressure.

5.4.1.3.6.3 Flywheel Integrity

The reactor coolant pump in the AP1000 complies with the requirement of General Design Criterion (GDC) Number 4. That Criterion states that components important to safety be protected against the effects of missiles.

The flywheel assemblies are located within and surrounded by the heavy walls of the stator closure, stator main flange, casing, thermal barrier, or lower stator flange. In the event of a postulated worst-case flywheel assembly failure, the surrounding structure can, by a large margin, contain the energy of the fragments without causing a rupture of the pressure boundary. The analysis in Reference 10 of the capacity of the housing to contain the fragments of the flywheel is done using the energy absorption equations of Hagg and Sankey (Reference 2).

Compliance with the requirement of GDC 4 related to missiles can be demonstrated without reference to flywheel integrity, nevertheless, the intent of the guidelines of Regulatory Guide 1.14 is followed in the design and fabrication of the flywheel. The guidelines in Regulatory Guide 1.14 apply to steel flywheels. Since the bi-metallic design of the AP1000 reactor coolant pump flywheel does not respond in the same manner as homogeneous steel, many of the guidelines in the Regulatory Guide are not directly applicable.

NRC 216

The reactor coolant pump flywheel assemblies are fabricated from a tungsten heavy ~~metal~~ alloy, Type 403 ~~and~~ stainless steel, and 18Ni maraging steel. Heavy alloy segments are fitted to a stainless steel hub; these segments are not relied upon structurally. The segments are ~~may be~~ held into place by an interference fit retainer cylinder of 18Ni maraging steel placed over the outside of the assembly. The assembly is hermetically sealed from primary coolant by ~~corrosion resistant~~ endplates and an outer thin shell of Alloy 625. Ni/Fe/Cr Alloy 600 is not used for this application.

NRC 216

The bi-metallic flywheel design will be manufactured using multiple processes and materials. In accordance with Regulatory Guide 1.14, each structural component of the bi-metallic flywheel will be inspected prior to final assembly according to its fabrication and the procedures outlined in Section III, NB-2500 of the ASME Code. The Type 403 stainless steel inner hub material will be subject to impact testing using three Charpy V-notch tests per ASTM A370, magnetic particle

NRC 216

examination per ASTM A788 Supplemental Requirement S18, and ultrasonic examination per ASTM A788 Supplemental Requirement S20, Acceptance Levels BR and S. The retainer ring will be subject to fracture toughness testing per ASTM E399, magnetic particle examination per ASTM A788 Supplemental Requirement S18, and ultrasonic examination per ASTM A788 Supplemental Requirement S20, Acceptance Levels BR and S. Following finishing operations on the flywheel assembly the outside surface of the retainer ring and the inside surfaces of the inner hub~~bore~~ are subject to liquid penetrant inspections in conformance with the requirements of ASTM-E-165 (Reference 4). In-process controls used during the construction of the flywheel assemblies also provide for the quality of the completed assemblies.

The design speed of the flywheel is defined as 125 percent of the synchronous speed of the motor. The design speed envelopes all expected overspeed conditions. At the normal speed the calculated maximum primary stress in the flywheel assemblies is less than one third of minimum yield strength. At the design speed the calculated maximum primary stress in the flywheel assemblies is less than two thirds of minimum yield strength.

An analysis of the flywheel failure modes of ductile failure, nonductile failure and excessive deformation of the flywheel is performed to evaluate the flywheel design. The analysis is performed to determine that the critical flywheel failure speeds, based on these failure modes, are greater than the design speed. The critical flywheel failure speeds are not the same as the critical speed identified for the rotor. The critical flywheel failure speeds are greater than the design speed. The overspeed condition for a postulated pipe rupture accident is less than the critical flywheel failure speeds.

NRC 216

NRC 216

The flywheel assemblies are sealed within a welded nickel-chromium-iron alloy enclosure to prevent contact with the reactor coolant or any other fluid. The enclosure minimizes the potential for corrosion of the flywheel and contamination of the reactor coolant. The enclosure material specifications are ASTM-B-443~~168~~ and ASTM-B-564. Even though the welds of the flywheel enclosure are not external pressure boundary welds, these welds are made using procedures and specifications that follow the rules of the ASME Code. A dye penetrant ~~and ultrasonic~~ test of the enclosure welds is performed in conformance with these requirements. The final assemblies are leak tested using a leak test hole located in the inner hub.

No credit is taken in the analysis of the flywheel missile generation for the retention of the fragments by the enclosure. A leak in the enclosure during operation could result in an out-of-balance flywheel assembly. An out-of-balance flywheel exhibits an increase in vibration, which is monitored by vibration instrumentation.

The flywheel enclosure contributes only a small portion of the energy in a rotating flywheel assembly.

The stress in the welds of the flywheel enclosure components for normal and design speeds are within the criteria in subsection NG of the ASME Code, which is used as a guideline.

Pipe rupture overspeed is based on a break of the largest branch line pipe connected to the reactor coolant system piping that is not qualified for leak-before-break criteria. The exclusion of the reactor coolant loop piping and branch line piping of 6 inches or larger size from the basis of the

pump loss of coolant accident overspeed condition is based on the provision in GDC 4 to exclude dynamic effects of pipe rupture when a leak-before-break analysis demonstrates that appropriate criteria are satisfied. See subsection 3.6.3 for a discussion of leak-before-break analyses. The criteria of subsection 3.6.2 are used to determine pipe break size and location for those piping systems that do not satisfy the requirements for mechanistic pipe break criteria.

NRC 216 In addition to material specification and non destructive testing requirement, each flywheel is subject to a spin test at 125 percent overspeed, followed by visual inspection, during manufacture. This demonstrates quality of the flywheel. Since the basis for the safety of the flywheel is retention of the fragments within the reactor coolant pump pressure boundary, periodic inservice inspections of the flywheel assemblies are not required to ensure that the basis for safe operation is maintained.

Because of the configuration of the flywheel assemblies, inservice inspection of the flywheel assemblies may not result in significant inspection results. Inspection of the flywheel assemblies would require removal of the assemblies from the shaft, removal of the enclosures, rewelding of the enclosure, reassembly, and balancing of the pump shaft. Opening of the pump assembly for a periodic inspection of the enclosure would result in an increased occupational radiation exposure and would not be consistent with goals relative to maintaining exposure as low as reasonably achievable. Also, opening the pump may increase the potential for entry of foreign objects into the motor area. For these reasons, routine, periodic inspection of the flywheel assemblies in the AP1000 reactor coolant pump is not recommended.

5.4.1.3.6.4 Other Rotating Components

The rotating components (other than the flywheel), including the impeller, auxiliary impeller, rotor, and rotor can, are evaluated for potential missile generation. In the event of fracture, the fragments from these components are contained by the surrounding pressure housing. The impeller is contained by the pump casing. The rotor and rotor can are contained by the stator, motor housing, and/or stator can. The auxiliary impeller is contained by the motor housing. In each case, the energy of the postulated fragments is less than that required to penetrate through the pressure boundary.

5.4.1.4 Tests and Inspections

Reactor coolant pump construction is subject to a quality assurance program. The pressure boundary components meet requirements established by the ASME Code. In addition, the flywheel is subject to quality assurance requirements. Table 5.4-3 outlines the inspection included in the reactor coolant pump quality assurance program.

The reactor coolant pump inservice inspection program is according to the ASME Code, Section XI.

The design enables disassembly and removal of the pump internals and motor for inspection of the pump casing or pressure boundary welds, as well as the bearings, flywheel assembly, and other internal components, if required. As noted earlier, routine inspections of the impeller, flywheel, and motor internals are not required for safe operation of the pump.

Nickel-chromium-iron alloy in various forms is used for parts where high velocities could otherwise lead to erosion/corrosion. These include the nozzles on the feedwater ring and startup feedwater sparger.

Subsection 5.2.1 discusses authorization for use of ASME Code cases used in material selection. Subsection 1.9.1 discusses the extent of conformance with Regulatory Guides 1.84, Design and Fabrication Code Case Acceptability ASME Section III, Division 1, and 1.85, Materials Code Case Acceptability ASME Section III, Division 1.

During manufacture, the primary and secondary sides of the steam generator are cleaned according to written procedures following the guidance of Regulatory Guide 1.37, Quality Assurance Requirements for Cleaning of Fluid Systems and Associated Components of Water-Cooled Nuclear Power Plants, and ASME NQA-1~~-1994 Edition~~ Part II~~2~~. Onsite cleaning and cleanliness control also follow the guidance of Regulatory Guide 1.37 (discussed in subsection 1.9.1). Cleaning process specifications are discussed in subsection 5.2.3.4.

NRC 271

Subsection 5.2.3.3 discusses the fracture toughness of the materials. Adequate fracture toughness of ferritic materials in the reactor coolant pressure boundary is provided by compliance with 10 CFR 50, Appendix G, Fracture Toughness Requirements, and Paragraph NB-2300 of Section III of the ASME Code.

The heat and lot of tubing material for each steam generator tube is recorded and documented as part of the quality assurance records. Archive samples of each heat and lot of steam generator tubing material are provided for use in future materials testing programs or as inservice inspection calibration standards. A minimum of 7 feet of tubing in the final heat treat condition is supplied.

The exterior of the steam generator surface may be submerged following a postulated actuation of the automatic depressurization system (ADS). During this event, water may be present on the outside of the steam generator without affecting the heat transfer or pressure boundary capabilities of the AP1000 steam generator.

5.4.2.4.2 Steam Generator Design Effects on Materials

Several features in the AP1000 steam generator minimize crevice areas and the deposition of contaminants from the secondary-side flow. Such crevices and deposits could otherwise produce a local environment allowing potential chemical concentration and material corrosion.

The portion of the tube within the tubesheet is expanded to close the crevice between the tube and tubesheet. The length of the expansion is carefully controlled to minimize the potential of an over-expanded condition above the tubesheet and to minimize the extent of unexpanded tube at the top of the tubesheet.

The tube support plates are made of corrosion resistant Type 405 stainless steel alloy. A three-lobed, or trifoil, tube hole design provides flow adjacent to the tube outer surface. This provides high sweeping velocities at the tube and tube support plate intersections. The trifoil tube support plate provides in-plane and out-of-plane strength. The sweeping velocities through the support plate reduce sludge accumulation in the tube-to-tube support crevices. Figure 5.4-3 shows the trifoil broached holes. This support plate design contributes to a high circulation ratio. The

The minimum requirements for inservice inspection of steam generators, including tube repair criteria, are discussed in subsection 5.4.15 considering NRC requirements and industry recommendations. The steam generator tube integrity is verified in accordance with a Steam Generator Tube Surveillance Program. The Steam Generator Tube Surveillance Program is discussed in subsection 5.4.15. Section XI of the ASME Code provides general acceptance criteria for indications of tube degradation in the steam generator.

5.4.2.6 Quality Assurance

NRC 271

The steam generator is constructed to a quality assurance program that meets the requirements of the ASME Code and ~~ANSI/~~ASME NQA-1-1994 Edition. Table 5.4-6 outlines the testing included in the steam generator quality assurance program.

The radiographic inspection and acceptance standard comply with the requirements of Section III of the ASME Code per applicable Code Year and Addenda.

Liquid penetrant inspection and acceptance standards comply with the requirements of Section III of the ASME Code per applicable Code Year and Addenda. Liquid penetrant inspection is performed on weld-deposited tubesheet cladding, channel head cladding, divider-plate-to-tubesheet and to channel head weldments, tube-to-tubesheet weldments, and weld-deposit cladding.

Magnetic particle inspection and acceptance standards comply with the requirements of Section III of the ASME Code per applicable Code Year and Addenda. Magnetic particle inspection is performed on the tubesheet forging, channel head forging, nozzle forging, and the following weldments:

- Nozzle to shell (if not integral)
- Support brackets
- Instrument connection (secondary)
- Temporary attachments, after removal
- Accessible pressure retaining welds after hydrostatic test

Ultrasonic inspection and acceptance standards comply with the requirements of Section III of the ASME Code per applicable Code Year and Addenda. Ultrasonic tests are performed on the tubesheet forgings, tubesheet cladding, secondary shells and heads plates and forgings, and nozzle forgings.

The heat transfer tubing is subjected to eddy current testing and ultrasonic examination.

Hydrostatic tests comply with Section III of the ASME Code.

Non-destructive examination of pressure boundary and associated weldments will be performed in accordance with the applicable Code Year and Addenda of ASME Section III, Subsections NB and NC.

significant residual stress in the pipe. Processes such as welding or heat treating which apply heat to stainless steel are controlled to minimize the potential for sensitization of the stainless steel.

Pressure boundary welds out to the second valve that delineates the reactor coolant system boundary are accessible for inservice examination as required by ASME Code, Section XI, and are fitted with removable insulation. Reactor coolant system piping is seamless and does not have any longitudinal welds.

5.4.3.5 Test and Inspections

The reactor coolant system piping construction is subject to a quality assurance program. The pressure boundary components meet requirements established by the ASME Code and ASME NQA-1~~-1994 Edition~~. The testing included in the reactor coolant system piping quality assurance program is outlined in Table 5.4-8.

NRC 271

A transverse tension test conforming with the supplementary requirements S2 of material specification ASME SA-376 applies to each heat of pipe material.

Ultrasonic examination is performed throughout 100 percent of the wall volume of each pipe, fitting, and other forgings according to the applicable requirements of Section III of the ASME Code for reactor coolant system piping. Unacceptable defects are eliminated according to the requirements of the ASME Code. The surfaces of weld areas are smooth enough to permit preservice and inservice non-destructive examination.

The ends of pipe sections and branch ends are machined to provide a smooth weld transition adjacent to the weld.

A liquid penetrant examination is performed on accessible surfaces, including weld surfaces, of each finished pipe and fitting according to the criteria of the ASME Code, Section III. Acceptance standards are according to the applicable requirements of the ASME Code, Section III. Liquid penetrant examinations are done on the area of pipe bends before the bending operation and after the subsequent heat treatment. Since reactor coolant system piping is austenitic stainless steel, magnetic particle testing for surface examination is not an option. Fillet weld joints are examined by liquid penetrant examination method.

Radiographic examination is performed on circumferential butt welds and on branch connection nozzle welds exceeding 4-inch nominal pipe size.

The examination of a weld repair is repeated as required for the original weld. Except, when the defect was originally detected by the liquid penetrant method, and when the repair cavity does not exceed the lesser of 0.38 inch or 10 percent of the thickness, it need be re-examined only by the liquid penetrant method.

temperature in the pressurizer. Temperature sensors with low temperature alarms are located in each spray line to alert the operator to insufficient bypass flow.

The layout of the common spray line piping routed to the pressurizer forms a water seal that prevents steam buildup back to the control valves. The design spray rate is selected to prevent the pressurizer pressure from reaching the reactor trip setpoint during a step reduction in power level of 10 percent of full load.

The pressurizer spray lines and valves are large enough to provide the required spray flowrate under the driving force of the differential pressure between the surge line connection in the hot leg and the spray line connection in the cold leg. The spray line inlet connections extend into the cold leg piping in the form of a scoop in order to use the velocity head of the reactor coolant loop flow to add to the spray driving force. The spray line also assists in equalizing the boron concentration between the reactor coolant loops and the pressurizer.

A flowpath from the chemical and volume control system to the pressurizer spray line is also provided. This path provides auxiliary spray to the vapor space of the pressurizer during cooldown, hot standby, and hot shutdown when the reactor coolant pumps are not operating. The pressurizer spray connection and the spray piping can withstand the thermal stresses resulting from the introduction of cold spray water.

5.4.5.4 Tests and Inspections

NRC 271

The pressurizer construction is subject to a quality assurance program. The pressure boundary components meet requirements established by the ASME Code and ASME NQA-1~~-1994 Edition~~. Table 5.4-12 outlines the testing included in the pressurizer quality assurance program.

The design of the pressurizer permits the inspection program prescribed by the ASME Code, Section XI. To implement the requirements of the ASME Code, Section XI, the following welds, when present, are designed and constructed to present a smooth transition surface between the parent metal and the weld metal. The weld surface is ground smooth for ultrasonic inspection.

- Surge nozzle to the lower head
- Safety and spray nozzles to the upper head
- Nozzle to safe end attachment welds
- The girth full-penetration welds

The liner within the safe end nozzle region extends beyond the weld region to maintain a uniform geometry for ultrasonic inspection.

Peripheral support rings are furnished for the removable insulation modules.

5.4.6 Automatic Depressurization System Valves

The automatic depressurization system (ADS) valves are part of the reactor coolant system and interface with the passive core cooling system (PXS). Twenty valves are divided into four depressurization stages. These stages connect to the reactor coolant system at three different locations. The automatic depressurization system first, second, and third stage valves are included

- Core decay heat generation is based on the decay heat curve for a three-region core having burnups consistent with a 24-month or 18-month refueling schedule and based on the ANSI/ANS-5.1-1994 decay heat curve (Reference 5).

- A failure of an active component during normal cooldown does not preclude the ability to cool down, but lengthens the time required to reach 125°F. Furthermore, if such a single failure occurs while the reactor vessel head is removed, the reactor coolant temperature remains below boiling temperature.

- The system operates at a constant normal residual heat removal flow rate throughout refueling operations. This includes the time when the level in the reactor coolant system is reduced to a midloop level to facilitate draining of the steam generators or removal of a reactor coolant pump. Operation of the system at the minimum level that the reactor coolant system can attain using the normal reactor coolant system draining connections and procedures results in no incipient vortex formation which would cause air entrainment into the pump suction.

- The pump suction line is self-venting with continually upward sloped pipe from the pump suction to the hot leg. This arrangement prevents entrapment of air and minimizes system venting efforts for startup.

- Features are included that permit mid-loop operations to be performed from the main control room.

5.4.7.1.2.2 Shutdown Purification

The normal residual heat removal system provides reactor coolant system flow to the chemical and volume control system during refueling operations. The purification flow rate is consistent with the purification flow rate specified in Table 9.3.6-1.

5.4.7.1.2.3 In-Containment Refueling Water Storage Tank Cooling

The normal residual heat removal system provides cooling for the in-containment refueling water storage tank during operation of the passive residual heat removal heat exchanger or during normal plant operations when required. The system is manually initiated by the operator. The normal residual heat removal system limits the in-containment refueling water storage tank water temperature to less than boiling temperature during extended operation of the passive residual heat removal system and not greater than 120°F during normal operation. The system performs this function based on the following:

- Operation of the system with both subsystems of normal residual heat removal system pumps and heat exchangers available.

- The component cooling water system supply temperature to the normal residual heat removal system heat exchangers is based on an ambient design wet bulb temperature of no greater than 86.1~~85.5~~°F (0 percent exceedance). The 86.1~~85.5~~°F value is assumed for normal conditions and transients that start at normal conditions. NRC 264

In certain design basis events described in Chapter 15, the pressurizer safety valves are predicted to operate with very low flow rates. For these events, the reactor coolant system pressure is slowly increasing as a result of the mismatch between the decay heat removal rate from the passive residual heat removal heat exchanger and the core decay heat. This slow pressurization of the reactor coolant system results in a small amount of steam flow through the safety valves. Under these conditions, the safety valves do not fully open and would not experience significant cycling. Operation of the safety valves under these conditions could result in small leakage from the valve (much less than the capacity of the normal makeup system), but does not impair the valve overpressure protection capability.

The relief valve on the normal residual heat removal system has an accumulation of 10 percent of the set pressure. The set pressure is the lower of the pressure based on the design pressure of the residual heat removal system and the pressure based on the reactor vessel low temperature pressure limit. The pressure limit determined based on the design pressure includes the effect of the pressure rise across the pump. The set pressure in Table 5.4-17 is based on the reactor vessel low temperature pressure limit. The lowest permissible set pressure is based on the required net positive suction head for the reactor coolant pump.

5.4.9.4 Tests and Inspections

The safety and relief valves are the subject of a variety of tests to validate the design and to verify pressure boundary and functional integrity. For valves that are required to function during a Service Level D condition, static deflection tests are performed to demonstrate operability. Section 3.10 describes these tests.

Safety valves similar to those connected to the pressurizer have been tested within the Electric Power Research Institute (EPRI) safety and relief valve test program. Capacity data for the specific AP1000 safety valve size has been correlated with the EPRI test data to demonstrate that the valve is adequate for steam flow and water flow, even though water flow is not anticipated through the pressurizer safety valves. The completion of this program addresses the requirements of 10 CFR 50.34(f)(2)(x) as related to reactor coolant system relief and safety valve testing. The normal residual heat removal system relief valve is designed for water relief and is not a reactor coolant system pressure relief device since it has a set pressure less than reactor coolant system design pressure. Therefore, the valve selected for the normal residual heat removal system relief valve is independent from the Electric Power Research Institute safety and relief valve test program.

Reactor coolant system pressure relief devices are subjected to preservice and inservice hydrostatic tests, seat leakage tests, operational tests, and inspections, as required. The preservice and inservice inspection and testing programs for valves are described in subsections 3.9.6 and 5.2.4 and Section 6.6. The test program for the safety valves complies with the requirements of
NRC 244 ~~ANSI/~~ASME Appendix I of the OM Code~~, Part 1~~.

The pressure boundary portion of the valves are required to be inservice inspected according to the rules of Section XI of the ASME Code. There are no full-penetration welds within the valve body walls. Valves are accessible for disassembly and internal visual inspection.

NRC 250

In the post-accident environment, both aluminum and zinc surfaces in the containment are subject to chemical attack resulting in the production of hydrogen and/or chemical precipitants that can affect long term core cooling. Primary sources of aluminum in the AP1000 containment are the excore detectors described in Section 7.1.2.7.2. To avoid sump water contact with the excore detectors, they are enclosed in housings. The non-flooded surfaces would be wetted by condensing steam but they would not be subjected to the boric acid or trisodium phosphate solutions since there is no containment spray. Nonsafety-related passive autocatalytic recombiners are provided to limit hydrogen buildup inside containment.

6.1.1.5 Integrity of Safety-Related Components

The pH adjustment baskets provide for long-term pH control. In the case of inadvertent short-term flooding when the pH adjustment baskets remain above the flood level, the condition of the material in contact with the fluid is evaluated prior to return to operation. Based on previous industry testing and experience, the behavior of austenitic stainless steels in the post-design basis accident environment is acceptable. Cracking is not anticipated, provided that the core cooling pH is maintained at an adequate level.

6.1.1.6 Thermal Insulation

The majority of the engineered safety features insulation used in the AP1000 containment is reflective metallic insulation. Fibrous insulation may be used if it is enclosed in stainless steel cans. The selection, procurement, testing, storage, and installation of nonmetallic thermal insulation provides confidence that the leachable concentrations of chloride, fluoride, and silicate are in conformance with Regulatory Guide 1.36. Conformance with Regulatory Guide 1.36 is summarized in Section 1.9.

6.1.1.7 Component and System Cleaning

See subsection 1.9.1 for a discussion on the provisions of Regulatory Guide 1.37 for the cleaning of components and systems.

6.1.2 Organic Materials

6.1.2.1 Protective Coatings

6.1.2.1.1 General

The AP1000 is divided into four areas with respect to the use of protective coatings. These four areas are:

- Inside containment
- Exterior surfaces of the containment vessel
- Radiologically controlled areas outside containment
- Remainder of plant.

The considerations for protective coatings differ for these four areas and the coatings selection process accounts for these differing considerations. The AP1000 design considers the function of

generators. The LOCA mass and energy releases described in subsection 6.2.1.3 are used for these calculations.

For the MSLB event, a representative pipe break spectrum is analyzed. Various break sizes and power levels are analyzed with the WGOTHIC code. The MSLB mass and energy releases described in subsection 6.2.1.4 are used for these calculations.

The results of the LOCA and MSLB postulated accidents are provided in Table 6.2.1.1-1. A comparison of the containment integrity acceptance criteria to General Design Criteria is provided in Table 6.2.1.1-3.

The containment pressure response for the peak pressure steam line break case is provided in Figure 6.2.1.1-1. The containment temperature response for the peak temperature steam line break case is provided in Figure 6.2.1.1-2.

The passive internal containment heat sink data used in the WGOTHIC analyses is presented in Reference 20, Section 13. Data for both metallic and concrete heat sinks are presented. The containment pressure and temperature responses to a double-ended cold leg guillotine are presented in Figures 6.2.1.1-5 and 6.2.1.1-6 for the 24 hour portion of the transient and Figures 6.2.1.1-7 and 6.2.1.1-8 for the 72 hour transient. A separate analysis for the double-ended cold leg guillotine LOCA event, without considering heat conduction from the dry to wet section, results in somewhat higher containment pressure in the long term, but still below 50 percent of design pressure at 24 hours. This separate analysis confirms the assumption in subsection 15.6.5.3.3 of reducing the containment leakage to half its design value at 24 hours. The containment pressure and temperature response to a double-ended hot leg guillotine break are presented in Figures 6.2.1.1-9 and 6.2.1.1-10. The physical properties of the materials corresponding to the heat sink information are presented in Table 6.2.1.1-8.

The instrumentation provided inside containment to monitor and record the containment pressure and temperature is found in Section 7.5.

6.2.1.1.4 External Pressure Analysis

NRC 269

NRC 269

NRC 269

NRC 269

Certain design basis events and credible inadvertent systems actuation have the potential to result in containment external pressure loads. Evaluations of these events show that an inadvertent actuation of active containment cooling~~loss of all ac power sources~~ during extreme cold ambient conditions has the potential for creating the worst-case external pressure load on the containment vessel. This event leads to a ~~reduction in the internal containment heat loads from the reactor coolant system and other active components, thus resulting in a~~ temperature reduction within the containment and an accompanying pressure reduction. Evaluations are performed to determine the maximum external pressure to which the containment may be subjected during a postulated actuation of active containment cooling~~loss of all ac power sources~~.

The evaluations are performed with the assumption of a -40°F ambient temperature with a steady 48 mph wind blowing to maximize cooling of the containment vessel. With no active cooling in use t~~T~~he initial internal containment temperature is conservatively calculated~~assumed~~ to be 69~~120~~°F, creating the largest possible temperature differential to maximize the heat removal rate through the containment vessel wall. A negative 0.2 psig initial containment pressure is used for this evaluation. A conservative maximum initial containment relative humidity of 100 percent is

used to produce the greatest reduction in containment pressure due to the loss of steam partial pressure by condensation. It is also conservatively assumed that no air leakage occurs into the containment during the transient.

NRC 269

Negative pressure is evaluated by assuming an inadvertent actuation of the active containment cooling. For AP1000, the passive containment cooling system provides heat removal from the containment shell to the environment via natural circulation air flow during normal operation. Since the passive containment cooling system water is relatively warm (minimum of 40°F) compared to the outside air temperature, actuation of this system results in a less limiting external pressure and shell temperature. Inadvertent actuation of the containment spray is not credible since the AP1000 containment spray requires significant local operator action to align the system. Inadvertent actuation of the containment fan coolers is the limiting event for external pressure at cold conditions.

NRC 269

Evaluations are performed using WGOTHIC with conservatively low estimates of the containment heat loads and conservatively high heat removal through the containment vessel consistent with the limiting assumptions stated above. Results of these evaluations demonstrate that ~~at one hour~~ after the event the net external pressure is approximately -0.9 psid which is within the capability of the containment vessel. The pressure changes very slowly after the initial decrease and there is~~within the 2. 9 psid design external pressure. This is~~ sufficient time for operator action to prevent the containment pressure from dropping below the -0.9 psid design external pressure, based on the PAM's containment pressure indications (four containment pressure instruments) and the ability to mitigate the pressure reduction by opening either set of containment ventilation purge isolation valves, which are powered by the 1E batteries.

The limiting case containment pressure transient is shown in Figure 6.2.1.1-11.

6.2.1.2 Containment Subcompartments

6.2.1.2.1 Design Basis

Subcompartments within containment are designed to withstand the transient differential pressures of a postulated pipe break. These subcompartments are vented so that differential pressures remain within structural limits. The subcompartment walls are challenged by the differential pressures resulting from a break in a high energy line. Therefore, a high energy line is postulated, with a break size chosen consistent with the position presented in Section 3.6, for analyzing the maximum differential pressures across subcompartment walls.

Section 3.6 describes the application of the mechanistic pipe break criteria, commonly referred to as leak-before-break (LBB), to the evaluation of pipe ruptures. This eliminates the need to consider the dynamic effects of postulated pipe breaks for pipes which qualify for LBB. However, the analyses of containment pressure and temperature, emergency core cooling, and environmental qualification of equipment are based on double-ended guillotine (DEG) reactor coolant system breaks and through-wall cracks.

6.2.1.2.1.1 Summary of Subcompartment Pipe Break Analyses

Each subcompartment is analyzed for effects of differential pressures resulting from the break of the most limiting line in the subcompartment which has not been evaluated for LBB.

cooling system) is designed to withstand the effects of natural phenomena such as earthquakes, winds, tornadoes, or floods. Components of the passive containment cooling system are designed to withstand the effects of ambient temperature extremes.

The portions of the passive containment cooling system which provide for long term (post 72-hour) water supply for containment wetting are located in Seismic Category I or Seismic Category II structures excluding the passive containment ancillary water storage tank and associated valves located outside of the auxiliary building. The water storage tank and the anchorage for the associated valves are Seismic Category II. The features of these structures which protect this function are analyzed and designed for Category 5 hurricanes including the effects of sustained winds, maximum gusts, and associated wind-borne missiles.

Operation of the containment cooling system is initiated automatically following the receipt of a Hi-2 containment pressure signal. The use of this signal provides for system actuation during transients, resulting in mass and energy releases to containment, while avoiding unnecessary actuations. System actuation requires the opening of any of the three isolation valves, with no other actions required to initiate the post-accident heat removal function since the cooling air flow path is always open. Operation of the passive containment cooling system may also be initiated from the main control room and from the remote shutdown workstation. A description of the actuation system is contained in Section 7.3.

The active components of the passive containment cooling system, the isolation valves, are located in three redundant pipe lines. Failure of a component in one train does not affect the operability of the other mechanical train or the overall system performance. The fail-open, air-operated valves require no electrical power to move to their safe (open) position. The normally open motor-operated valves are powered from separate redundant Class 1E dc power sources. Table 6.2.2-3 presents a failure modes and effects analysis of the passive containment cooling system.

Capability is provided to periodically test actuation of the passive containment cooling system. Active components can be tested periodically during plant operation to verify operability. The system can be inspected during unit shutdown. Additional information is contained in subsections 3.9.6 and 6.2.2.4, as well as in the Technical Specifications.

The passive containment cooling system components located inside containment, the containment pressure sensors, are tested and qualified to perform in a simulated design basis accident environment. These components are protected from effects of postulated jet impingement and pipe whip in case of a high-energy line break.

The containment pressure analyses are based on an ambient air temperature of 115°F dry bulb and
NRC 264 86.1~~80~~°F coincident wet bulb. The passive containment cooling water storage tank water temperature basis is 120°F. Results of the analyses are provided in subsection 6.2.1.

Two general characteristics have been incorporated into the design of the AP1000 to promote mixing and eliminate dead-end compartments. The compartments below deck are large open volumes with relatively large interconnections, which promote mixing throughout the below deck region. All compartments below deck are provided with openings through the top of the compartment to eliminate the potential for a dead pocket of high-hydrogen concentration. In addition, if forced containment air-circulation is operated during post-accident recovery, then nonsafety-related fan coolers contribute to circulation in containment.

In the event of a hydrogen release to the containment, passive autocatalytic recombiners act to recombine hydrogen and oxygen on a catalytic surface (see subsection 6.2.4.2.2). The enthalpy of reaction generates heat within a passive autocatalytic recombiner, which further drives containment mixing by natural circulation. Catalytic recombiners reduce hydrogen concentration at very low hydrogen concentrations (less than 1 percent) and very high steam concentrations, and may also promote convection to complement passive containment cooling system natural circulation currents to inhibit stratification of the containment atmosphere (Reference 17). The implementation of passive autocatalytic recombiners has a favorable impact on both containment mixing and hydrogen mitigation.

NRC 235

6.2.4.1.2~~4~~ Validity of Hydrogen Monitoring

The hydrogen monitoring function monitors hydrogen concentrations of various locations within the containment.

NRC 235

6.2.4.1.3~~5~~ Hydrogen Control for Severe Accident

The containment hydrogen concentration is limited by operation of the distributed hydrogen ignition subsystem. Ignition causes deflagration of hydrogen (burning of the hydrogen with flame front propagation at subsonic velocity) at hydrogen concentrations between the flammability limit and 10 volume percent and thus prevents the occurrence of hydrogen detonation (burning of hydrogen with supersonic flame front propagation).

6.2.4.2 System Design

6.2.4.2.1 Hydrogen Concentration Monitoring Subsystem

The hydrogen concentration monitoring subsystem consists of three hydrogen sensors. The sensors are placed in the upper dome where bulk hydrogen concentration can be monitored.

The system contains a total of three sensors designated as non-Class 1E serving to provide a post accident monitoring function. See Section 7.5 for additional information.

The hydrogen sensors are powered by the Non-Class 1E dc and UPS System. Sensor parameters are provided in Table 6.2.4-1. Hydrogen concentration is continuously indicated in the main control room. Additionally, high hydrogen concentration alarms are provided in the main control room.

The sensors are designed to provide a rapid response detection of changes in the bulk containment hydrogen concentration.

Table 6.2.1.1-1

SUMMARY OF CALCULATED PRESSURES AND TEMPERATURES

Break	Peak Pressure (psig)	Available[1] Margin (psi)	Peak Temperature (°F)
Double-ended hot leg guillotine	50.0	9.0	416.5
Double-ended cold leg guillotine	57.8	1.2	284.9
Full main steamline DER, 30% power, MSIV failure	57.3	1.7	373.9
Full main steamline DER, 101% power, MSIV failure	53.7	5.3	375.3

Note:
1. Design Pressure is 59 psig

Table 6.2.1.1-2

INITIAL CONDITIONS

Internal Temperature (°F)	120
Pressure (psia)	15.7
Relative Humidity (%)	0
Net Free Volume (ft^3)	2.06E+06
External Temperature (°F)	115 dry bulb 86.1~~80~~ wet bulb

NRC 264

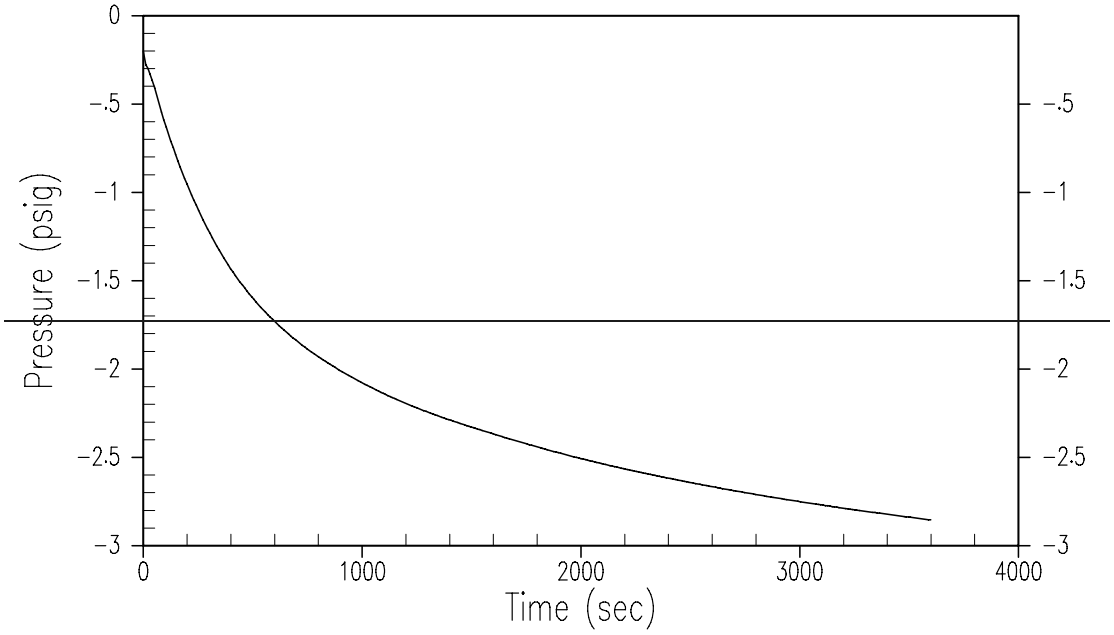

NRC 269

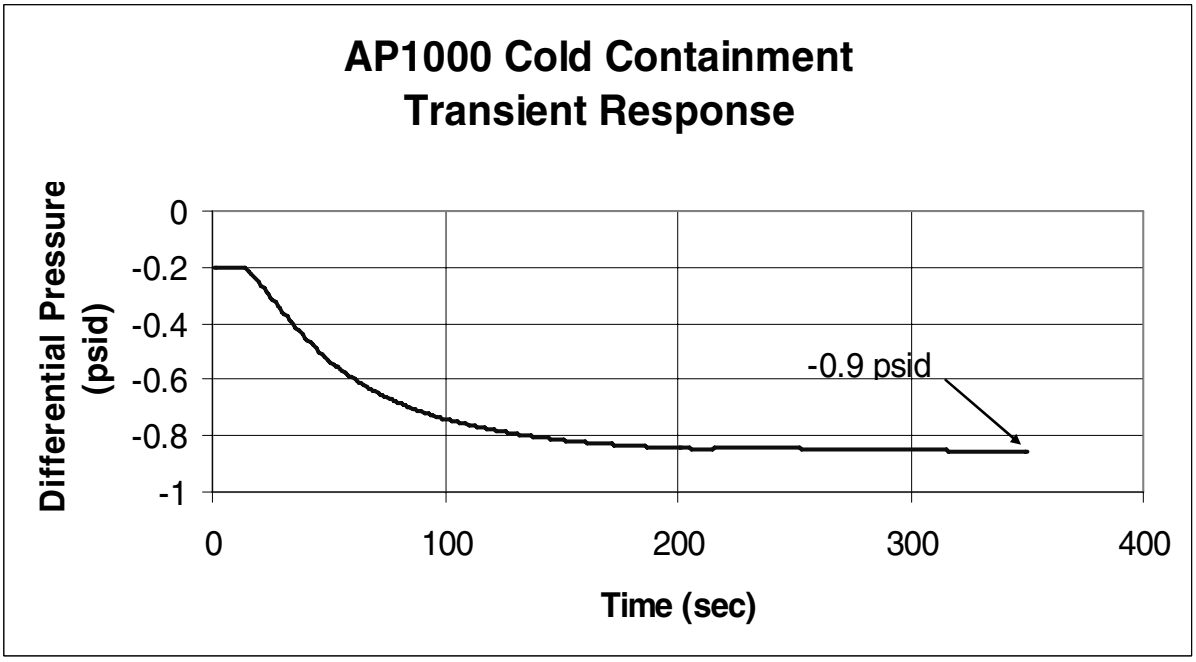

Figure 6.2.1.1-11

AP1000 External Pressure Analysis Containment Pressure vs. Time

submerged below the in-containment refueling water storage tank overflow level by ≤11.5 feet. The component data for the spargers is shown in Table 6.3-2. The spargers are AP1000 Equipment Class C and are designed to meet seismic Category I requirements.

The spargers perform a nonsafety-related function -- minimizing plant cleanup and recovery actions following automatic depressurization. They are designed to distribute steam into the in-containment refueling water storage tank, thereby promoting more effective steam condensation.

The first three stages of automatic depressurization system valves discharge through the spargers and are designed to pass sufficient depressurization venting flow, with an acceptable pressure drop, to support the depressurization system performance requirements. The installation of the spargers prevents undesirable and/or excessive dynamic loads on the in-containment refueling water storage tank and other structures.

Each sparger is sized to discharge at a flow rate that supports automatic depressurization system performance, which in turn, allows adequate passive core cooling system injection.

6.3.2.2.7 IRWST and Containment Recirculation Screens

The passive core cooling systems has two different sets of screens that are used following a LOCA; IRWST screens and containment recirculation screens. These screens prevent debris from entering the reactor and blocking core cooling passages during a LOCA. These screens are designed to comply with applicable licensing regulations including:

- GDC 35 of 10 CFR 50 Appendix A
- Regulatory Guide 1.82
- NUREG-0897

The operation of the passive core cooling system following a LOCA is described in subsection 6.3.2.1.3. Proper screen design, plant layout, and other factors prevent clogging of these screens by debris during accident operations.

6.3.2.2.7.1 General Screen Design Criteria

1. Screens are designed to Regulatory Guide 1.82, including:

   - Separate, large screens are provided for each function

   - Screens are located well below containment floodup level. Each screen provides the function of a trash rack~~,~~ and a fine screen.~~, and a~~ A debris curb is provided to prevent high density debris from being swept along the floor to the screen face.

NRC 250

   - Floors slope away from screens (not required for AP1000)

   - Drains do not impinge on screens

- Screens can withstand accident loads and credible missiles
- Screens have conservative flow areas to account for plugging. Operation of the non-safety-related normal residual heat removal pumps with suction from the IRWST and the containment recirculation lines is considered in sizing screens.
- System and screen performance are evaluated
- Screens have solid top cover. Containment recirculation screens have protective plates that are located no more than 1 foot above the top of the screens and extend at least 10 feet in front and 7 feet to the side of the screens. The plate dimensions are relative to the portion of the screens where water flows enters the screen openings~~through the trash rack~~.

NRC 250

- Screens are seismically qualified
- Screen openings are sized to prevent blockage of core cooling
- Screens are designed for adequate pump performance. AP1000 has no safety-related pumps.
- Corrosion resistant materials are used for screens
- Access openings in screens are provided for screen inspection
- Screens are inspected each refueling

2. Low screen approach velocities limit the transport of heavy debris even with operation of normal residual heat removal pumps.

3. Metal reflective insulation is used on ASME class 1 lines because they are subject to loss-of-coolant accidents. Metal reflective insulation is also used on the reactor vessel, the reactor coolant pumps, the steam generators, and on the pressurizer because they have relatively large insulation surface areas and they are located close to large ASME class 1 lines. As a result, they are subject to jet impingement during loss-of-coolant accidents. A suitable equivalent insulation to metal reflective may be used. A suitable equivalent insulation is one that is enclosed such that LOCA jet impingement does not damage the insulation and generate debris or one that may be damaged by LOCA jet impingement as long as the resulting insulation debris are not transported to the containment recirculation screens.

   In order to provide additional margin, metal reflective insulation is used on lines that are subject to jet impingement during loss-of-coolant accidents that are not otherwise shielded from the blowdown jet. As a result, fibrous debris is not generated by loss-of-coolant accidents. Insulation located in a spherical region within a distance equal to 20 inside diameters of the LOCA pipe break is assumed to be affected by the LOCA when there are intervening components, supports, structures, or other objects. In the absence of intervening components, supports, structures, or other objects insulation in a cylindrical area extending

surface of the containment shell is one potential source of debris that may enter the gutter and the IRWST. As described in subsection 6.1.2.1.5, failure of this coating produces a heavy powder which if it enters the IRWST through the gutter will settle out on the bottom of the IRWST because of its high specific gravity. Settling is enhanced in the IRWST by low velocities in the tank and long tank drain down times.

NRC 250

The design of the IRWST screens reduces the chance of debris reaching the screens. The screens are oriented vertically such that debris that settles out of the water does not fall on the screens. ~~The screen design provides a~~A debris curb ~~function~~ is provided near~~at~~ the base of the IRWST screens to prevent high density debris from being swept along the floor by water flow to the IRWST screens. The screen design provides the trash rack function. This is accomplished by the screens having a large surface area to prevent a single object from blocking a large portion of the screen and by the screens having a robust design to preclude an object from damaging the screen and causing by-pass. The screen prevents debris larger than 0.125" from being injected into the reactor coolant system and blocking fuel cooling passages. The screen is a type that has sufficient surface area to accommodate debris that could be trapped on the screen. The design of the IRWST screens is described further in APP-GW-GLN-147 (Reference 4).

NRC 250

The screen flow area is conservatively designed considering the operation of the nonsafety-related normal residual heat removal system pumps which produce a higher flow than the safety-related gravity driven IRWST injection/recirculation flows. As a result, when the normal residual heat removal system pumps are not operating there is a large margin to screen clogging.

6.3.2.2.7.3 Containment Recirculation Screens

NRC 250

The containment recirculation screens are oriented vertically along walls above the loop compartment floor (elevation 83 feet). Figure 6.3-8 shows a plan view and Figure 6.3-9 shows a section view of these screens. Two separate screens are provided as shown in Figure 6.3-3. The loop compartment floor elevation is significantly above (11.5 feet) the lowest level in the containment, the reactor vessel cavity. A two-foot-high debris curb is provided in front of the screens.~~The bottom of the recirculation screen is two feet above the floor, providing a curb function.~~

NRC 250

During a LOCA, the reactor coolant system blowdown will tend to carry debris created by the accident (pipe whip/jets) into the cavity under the reactor vessel which is located away from and below the containment recirculation screens. As the accumulators, core makeup tanks and IRWST inject, the containment water level will slowly rise above the 108 foot elevation. The containment recirculation line opens when the water level in the IRWST drops to a low level setpoint a few feet above the final containment floodup level. When the recirculation lines initially open, the water level in the IRWST is higher than the containment water level and water flows from the IRWST backwards through the containment recirculation screen. This back flow tends to flush debris located close to the recirculation screens away from the screens. ~~A cross connect pipe line interconnects the two PXS subsystems so that~~A flow connection between Screen A and Screen B is provided so that both recirculation screens will operate, even in the case of a LOCA of a DVI line in a PXS valve room. Such a LOCA can flood the recirculation valves located in one of the PXS rooms before they are actuated, and the failure of these valves is assumed since they are not

IRWST. As described in subsection 6.1.2.1.5, failure of this coating produces a heavy powder which if it enters the IRWST through the gutter will settle out on the bottom of the IRWST because of its high specific gravity. Settling is enhanced in the IRWST by low velocities in the tank and long tank drain down times.

The design of the IRWST screens reduces the chance of debris reaching the screens. The screens are oriented vertically such that debris that settles out of the water does not fall on the screens. The screen design provides a debris curb function at the base of the IRWST screens to prevent high density debris from being swept along the floor by water flow to the IRWST screens. The screen design provides the trash rack function. This is accomplished by the screens having a large surface area to prevent a single object from blocking a large portion of the screen and by the screens having a robust design to preclude an object from damaging the screen and causing by-pass. The screen prevents debris larger than 0.125" from being injected into the reactor coolant system and blocking fuel cooling passages. The screen is a type ~~(folded, pockets, etc.)~~ that has sufficient surface area to accommodate debris that could be trapped on the screen. The design of the IRWST screens is described in APP-GW-GLN-147 (Reference 4).

NRC 194

The screen flow area is conservatively designed considering the operation of the nonsafety-related normal residual heat removal system pumps which produce a higher flow than the safety-related gravity driven IRWST injection/recirculation flows. As a result, when the normal residual heat removal system pumps are not operating there is a large margin to screen clogging.

TR-134, Rev 2

6.3.2.2.7.3 Containment Recirculation Screens

The containment recirculation screens are oriented vertically along walls above the loop compartment floor (elevation 83 feet). Figure 6.3-8 shows a plan view and Figure 6.3-9 shows a section view of these screens. Two separate screens are provided as shown in Figure 6.3-3. The loop compartment floor elevation is significantly above (11.5 feet) the lowest level in the containment, the reactor vessel cavity. The bottom of the recirculation screen is two feet above the floor, providing a curb function.

During a LOCA, the reactor coolant system blowdown will tend to carry debris created by the accident (pipe whip/jets) into the cavity under the reactor vessel which is located away from and below the containment recirculation screens. As the accumulators, core makeup tanks and IRWST inject, the containment water level will slowly rise above the 108 foot elevation. The containment recirculation line opens when the water level in the IRWST drops to a low level setpoint a few feet above the final containment floodup level. When the recirculation lines initially open, the water level in the IRWST is higher than the containment water level and water flows from the IRWST backwards through the containment recirculation screen. This back flow tends to flush debris located close to the recirculation screens away from the screens. A cross connect pipe line interconnects the two PXS subsystems so that both recirculation screens will operate, even in the case of a LOCA of a DVI line in a PXS valve room. Such a LOCA can flood the recirculation valves located in one of the PXS rooms before they are actuated, and the failure of these valves is assumed since they are not qualified to operate in such conditions. The recirculation valves in the other PXS valve room are unaffected.

qualified to operate in such conditions. The recirculation valves in the other PXS valve room are unaffected.

The water level in the containment when recirculation begins is well above (~ 10 feet) the top of the recirculation screens. During the long containment floodup time, floating debris does not move toward the screens and heavy materials settle to the floors of the loop compartments or the reactor vessel cavity. During recirculation operation the containment water level will not change significantly nor will it drop below the top of the screens.

The amount of debris that may exist following an accident is limited. Reflective insulation is used to preclude fibrous debris that can be generated by a loss of coolant accident and be postulated to reach the screens during recirculation. The nonsafety-related coatings used in the containment are designed to withstand the post accident environment. The containment recirculation screens are protected by plates located above them. These plates prevent debris from the failure of nonsafety-related coatings from getting into the water close to the screens such that the recirculation flow can cause the debris to be swept to the screens before it settles to the floor. Stainless steel is used on the underside of these plates and on surfaces located below the plates, above the bottom of the screens, 10 feet in front and 7 feet to the side of the screens to prevent coating debris from reaching the screens.

A cleanliness program (refer to subsection 6.3.8.1) controls foreign debris introduced into the containment during maintenance and inspection operations. The Technical Specifications require visual inspections of the screens during every refueling outage.

The design of the containment recirculation screens reduces the chance of debris reaching the screens. The screens are orientated vertically such that debris settling out of the water will not fall on the screens. The protective plates described above provide additional protection to the screens from debris. ~~The bottom of the screens are located 2 feet above the floor, instead of using a~~A 2-foot-high debris curb is provided~~,~~ to prevent high density debris from being swept along the floor by water flow to the containment recirculation screens. The screen design provides the trash rack function. This is accomplished by the screens having a large surface area to prevent a single object from blocking a large portion of the screen and by the screens having a robust design to preclude an object from damaging the screen and causing by-pass. The screen prevents debris larger than 0.125" from being injected into the reactor coolant system and blocking fuel cooling passages. The screen is a type that has more surface area to accommodate debris that could be trapped on the ~~fine~~ screen. The design of the containment recirculation screens is further described in APP-GW-GLN-147 (Reference 4).

NRC 250

NRC 250

The screen flow area is conservatively designed, considering the operation of the normal residual heat removal system pumps, which produce a higher flow than the gravity driven IRWST injection/recirculation flows. As a result, when the normal residual heat removal system pumps are not operating there is even more margin in screen clogging.

6.3.8.2 Verification of Water Sources for Long-Term Recirculation Cooling Following a LOCA

The Combined License information requested in this subsection has been addressed in APP-GW-GLR-079 (Reference 3), and the applicable changes are incorporated into the DCD.

The combined license holder referencing the AP1000 design will provide an assessment of the acceptability of the screen performance by performing testing and analysis of the screens. Downstream effects will be assessed to confirm the coolability of the core. The completed evaluation documented in APP-GW-GLR-079 (Reference 3) is consistent with Regulatory Guide 1.82 Revision 3 and demonstrates that adequate long-term core cooling is available considering debris resulting from a LOCA and debris that might exist in containment prior to a LOCA.

The following words represent the original Combined License Information Item commitment, which has been addressed as discussed above:

> The Combined License applicants referencing the AP1000 will perform an evaluation consistent with Regulatory Guide 1.82, revision 3, and subsequently approved NRC guidance, to demonstrate that adequate long-term core cooling is available considering debris resulting from a LOCA together with debris that exists before a LOCA. As discussed in DCD subsection 6.3.2.2.7.1, a LOCA in the AP1000 does not generate fibrous debris due to damage to insulation or other materials included in the AP1000 design. The evaluation will consider resident fibers and particles that could be present considering the plant design, location, and containment cleanliness program. The determination of the characteristics of such resident debris will be based on sample measurements from operating plants. The evaluation will also consider the potential for the generation of chemical debris (precipitants). The potential to generate such debris will be determined considering the materials used inside the AP1000 containment, the post-accident water chemistry of the AP1000, and the applicable research/testing.

6.3.9 References

1. WCAP-8966, “Evaluation of Mispositioned ECCS Valves,” September 1977.

2. WCAP-13594 (P), WCAP-13662 (NP), “FMEA of Advanced Passive Plant Protection System,” Revision 1, June 1998.

3. APP-GW-GLR-079, “AP1000 Verification of Water Sources for Long-Term Recirculation Cooling Following a LOCA,” Westinghouse Electric Company LLC.

NRC 250

4. APP-GW-GLN-147, “AP1000 Containment Recirculation and IRWST Screen Design,” Westinghouse Electric Company LLC.

6.3.8.2 Verification of Water Sources for Long-Term Recirculation Cooling Following a LOCA

The Combined License information requested in this subsection has been ~~fully~~ addressed in APP-GW-GLR-079 (Reference 3), and the applicable changes are incorporated into the DCD. ~~No additional work is required by the Combined License applicant to address the aspects of the Combined License information requested in this subsection.~~

NRC 197

The combined license holder referencing the AP1000 design will provide an assessment of the acceptability of the screen performance by performing testing and analysis of the screens. Downstream effects will be assessed to confirm the coolability of the core.

The completed evaluation documented in APP-GW-GLR-079 (Reference 3) is consistent with Regulatory Guide 1.82 Revision 3 and demonstrates that adequate long-term core cooling is available considering debris resulting from a LOCA and debris that might exist in containment prior to a LOCA.

The following words represent the original Combined License Information Item commitment, which has been addressed as discussed above:

> The Combined License applicants referencing the AP1000 will perform an evaluation consistent with Regulatory Guide 1.82, revision 3, and subsequently approved NRC guidance, to demonstrate that adequate long-term core cooling is available considering debris resulting from a LOCA together with debris that exists before a LOCA. As discussed in DCD subsection 6.3.2.2.7.1, a LOCA in the AP1000 does not generate fibrous debris due to damage to insulation or other materials included in the AP1000 design. The evaluation will consider resident fibers and particles that could be present considering the plant design, location, and containment cleanliness program. The determination of the characteristics of such resident debris will be based on sample measurements from operating plants. The evaluation will also consider the potential for the generation of chemical debris (precipitants). The potential to generate such debris will be determined considering the materials used inside the AP1000 containment, the post-accident water chemistry of the AP1000, and the applicable research/testing.

TR 134, Rev 2

6.3.9 References

1. WCAP-8966, "Evaluation of Mispositioned ECCS Valves," September 1977.

2. WCAP-13594 (P), WCAP-13662 (NP), "FMEA of Advanced Passive Plant Protection System," Revision 1, June 1998.

3. APP-GW-GLR-079, "AP1000 Verification of Water Sources for Long-Term Recirculation Cooling Following a LOCA," Westinghouse Electric Company LLC.

NRC 194

4. APP-GW-GLN-147, "AP1000 Containment Recirculation and IRWST Screen Design," Westinghouse Electric Company LLC.

Table 6.3-2 (Sheet 2 of 2)

COMPONENT DATA - PASSIVE CORE COOLING SYSTEM

IRWST		
Number	1	
Type	Integral to containment internal structure	
Volume, minimum water (cubic feet)	73,900	
Design pressure (psig)	5	
Design temperature (°F)	150 *	
Material	Wetted surfaces are stainless steel	
AP1000 equipment class	C	
Spargers		
Number	2	
Type	Cruciform	
Flow area of holes (in^2)	274	
Design pressure (psig)	600	
Design temperature (°F)	500	
Material	Stainless Steel	
AP1000 equipment class	C	
pH Adjustment Baskets		
Number	4	
Type	Rectangular	
Volume minimum total (cubic feet)	560	
Material	Stainless steel	
AP1000 equipment class	C	
Screens	IRWST	Containment Recirculation
Number	2	2 ~~(Connected)~~
Surface area, screen (square feet)	≥500 per screen	≥2,500 per screen
Material	Stainless steel	Stainless steel
AP1000 equipment class	C	C

NRC 250

Note:
* Several times during plant life, the refueling water could reach 250°F.

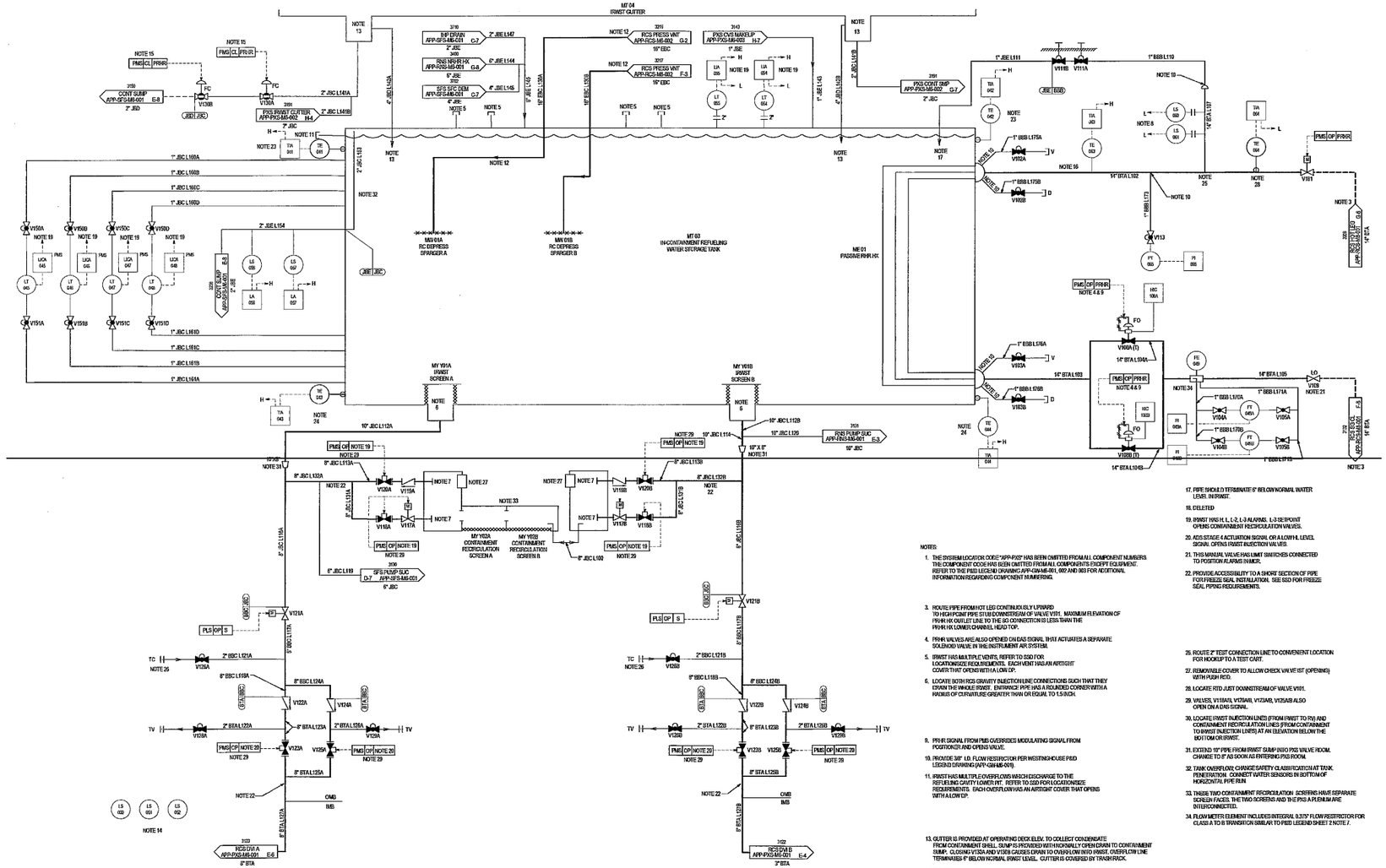
MT 04
IRWST GUTTER
CONT SUMP
APP-SFS-MB-001
PXS IRWST GUTTER
APP-PXS-MB-002
RCS PRESS VNT
APP-RCS-MB-002
PXS CVS MAKEUP
APP-PXS-MB-003
PXS CONT SMP
APP-PXS-MB-002
MT 03
IN-CONTAINMENT REFUELING WATER STORAGE TANK
ME 01
PASSIVE RHR HX
MY Y01A
IRWST SCREEN A
MY Y01B
IRWST SCREEN B
MY Y02A
CONTAINMENT RECIRCULATION SCREEN A
MY Y02B
CONTAINMENT RECIRCULATION SCREEN B
SFS PUMP SUC
APP-SFS-MB-001
RCS DVI A
APP-PXS-MB-001
RCS DVI B
APP-PXS-MB-001
RCS SUCT
APP-PXS-MB-001
RCS DVI LEG
APP-PXS-MB-001
NOTES:
1. THE SYSTEM LOCATOR CODE "APP-PXS" HAS BEEN OMITTED FROM ALL COMPONENT NUMBERS. THE COMPONENT CODE HAS BEEN OMITTED FROM ALL COMPONENTS EXCEPT EQUIPMENT. REFER TO THE P&ID LEGEND DRAWING APP-GW-M6-001, 002 AND 003 FOR ADDITIONAL INFORMATION REGARDING COMPONENT NUMBERING.
3. ROUTE PIPE FROM HOT LEG CONTINUOUSLY UPWARD TO HIGH POINT PIPE STUB DOWNSTREAM OF VALVE V101. MAXIMUM ELEVATION OF PRHR HX OUTLET LINE TO THE SG CONNECTION IS LESS THAN THE PRHR HX LOWER CHANNEL HEAD TOP.
4. PRHR VALVES ARE ALSO OPENED ON DAS SIGNAL THAT ACTUATES A SEPARATE SOLENOID VALVE IN THE INSTRUMENT AIR SYSTEM.
5. IRWST HAS MULTIPLE VENTS. REFER TO SSD FOR LOCATION/SIZE REQUIREMENTS. EACH VENT HAS AN AIRTIGHT COVER THAT OPENS WITH A LOW DP.
6. LOCATE BOTH RCS GRAVITY INJECTION LINE CONNECTIONS SUCH THAT THEY DRAIN THE WHOLE IRWST. ENTRANCE PIPE HAS A ROUNDED CORNER WITH A RADIUS OF CURVATURE GREATER THAN OR EQUAL TO 1.5 INCH.
9. PRHR SIGNAL FROM PMS OVERRIDES MODULATING SIGNAL FROM POSITIONER AND OPENS VALVE.
10. PROVIDE 3/8" I.D. FLOW RESTRICTOR PER WESTINGHOUSE P&ID LEGEND DRAWING (APP-GW-M6-001).
11. IRWST HAS MULTIPLE OVERFLOWS WHICH DISCHARGE TO THE REFUELING CAVITY LOWER PT. REFER TO SSD FOR LOCATION/SIZE REQUIREMENTS. EACH OVERFLOW HAS AN AIRTIGHT COVER THAT OPENS WITH A LOW DP.
13. GUTTER IS PROVIDED AT OPERATING DECK ELEV. TO COLLECT CONDENSATE FROM CONTAINMENT SHELL. SUMP IS PROVIDED WITH NORMALLY OPEN DRAIN TO CONTAINMENT SUMP. CLOSING V130A AND V130B CAUSES DRAIN TO OVERFLOW INTO IRWST. OVERFLOW LINE TERMINATES 6" BELOW NORMAL IRWST LEVEL. GUTTER IS COVERED BY TRASH RACK.
14. THREE REDUNDANT CONTAINMENT WATER LEVEL INSTRUMENTS ARE PROVIDED COVERING CONTAINMENT LEVEL FROM BOTTOM OF REACTOR VESSEL CAVITY TO MAXIMUM FLOOD LEVEL.
15. IRWST GUTTER ISOLATION VALVES ALSO CLOSE ON DAS SIGNAL THAT ACTUATES A SEPARATE SOLENOID VALVE IN THE INSTRUMENT AIR SYSTEM.
16. LOCATE STRAP-ON RTD ON PIPE, APPROXIMATELY 3 FEET BELOW HIGH POINT.
17. PIPE SHOULD TERMINATE 6" BELOW NORMAL WATER LEVEL IN IRWST.
18. DELETED
19. IRWST HAS H, L, L-2, L-3 ALARMS. L-3 SETPOINT OPENS CONTAINMENT RECIRCULATION VALVES.
20. ADS STAGE 4 ACTUATION SIGNAL OR A LOW H. LEVEL SIGNAL OPENS IRWST INJECTION VALVES.
21. THIS MANUAL VALVE HAS LIMIT SWITCHES CONNECTED TO POSITION ALARMS IN MCR.
22. PROVIDE ACCESSIBILITY TO A SHORT SECTION OF PIPE FOR FREEZE SEAL INSTALLATION. SEE SSD FOR FREEZE SEAL PIPING REQUIREMENTS.
26. ROUTE 2" TEST CONNECTION LINE TO CONVENIENT LOCATION FOR HOOKUP TO A TEST CART.
27. REMOVABLE COVER TO ALLOW CHECK VALVE IST (OPENING) WITH PUSH ROD.
28. LOCATE RTD JUST DOWNSTREAM OF VALVE V101.
29. VALVES, V118A/B, V120A/B, V122A/B, V125A/B ALSO OPEN ON A DAS SIGNAL.
30. LOCATE IRWST INJECTION LINES (FROM IRWST TO Pit) AND CONTAINMENT RECIRCULATION LINES (FROM CONTAINMENT TO IRWST INJECTION LINES) AT AN ELEVATION BELOW THE BOTTOM OF IRWST.
31. EXTEND 10" PIPE FROM IRWST SUMP INTO PXS VALVE ROOM. CHANGE TO 8" AS SOON AS ENTERING PXS ROOM.
32. TANK OVERFLOW: CHANGE SAFETY CLASSIFICATION AT TANK PENETRATION. CONNECT WATER SENSORS IN BOTTOM OF HORIZONTAL PIPE RUN
33. THESE TWO CONTAINMENT RECIRCULATION SCREENS HAVE SEPARATE SCREEN FACES. THE TWO SCREENS AND THE PXS A PLENUM ARE INTERCONNECTED.
34. FLOW METER ELEMENT INCLUDES INTEGRAL 0.375" FLOW RESTRICTOR FOR CLASS A TO B TRANSITION SIMILAR TO P&ID LEGEND SHEET 2 NOTE 7.

NRC 250

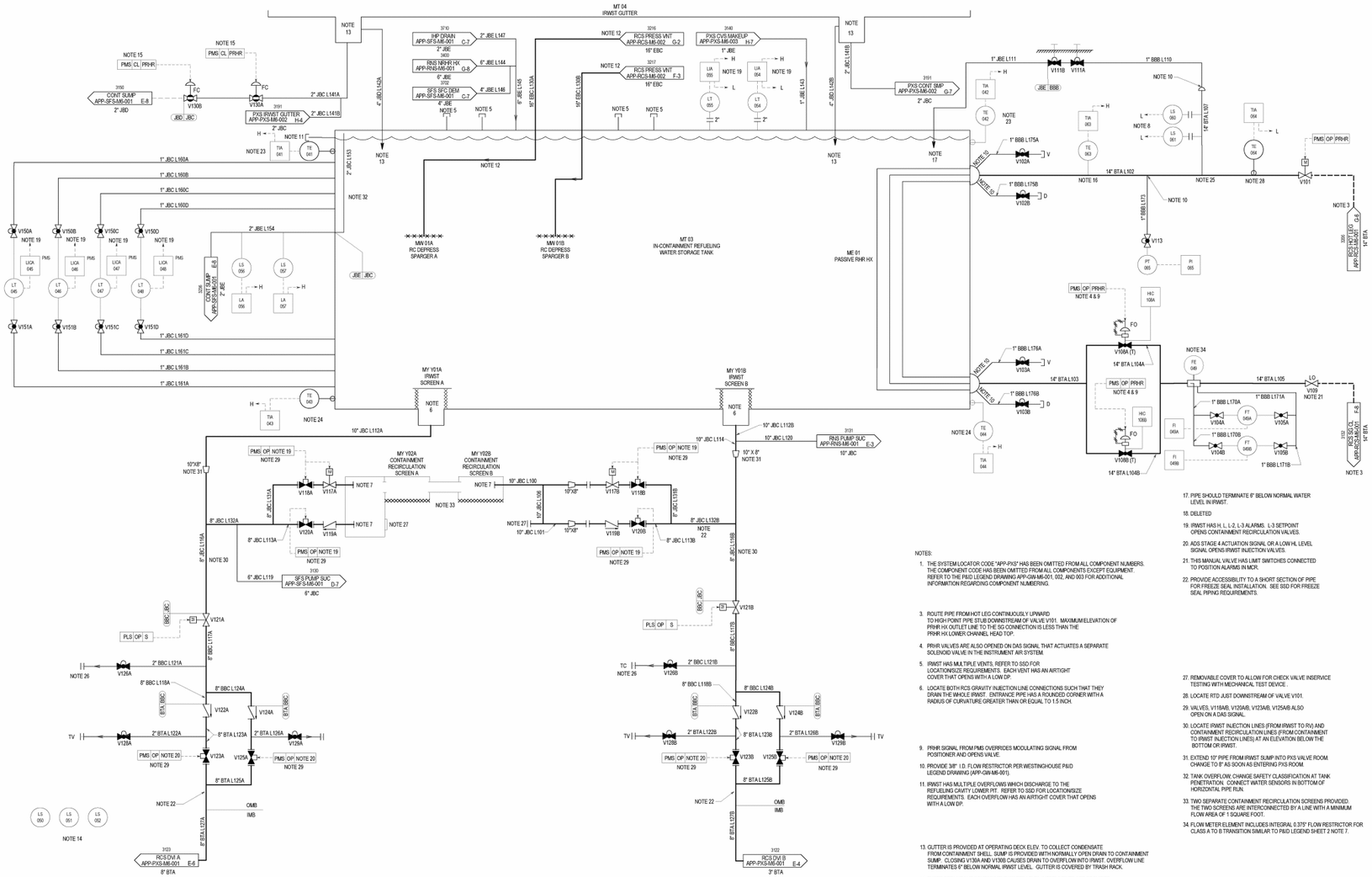

NOTES:

1. THE SYSTEM LOCATOR CODE "APP-PXS" HAS BEEN OMITTED FROM ALL COMPONENT NUMBERS. THE COMPONENT CODE HAS BEEN OMITTED FROM ALL COMPONENTS EXCEPT EQUIPMENT. REFER TO THE P&ID LEGEND DRAWING APP-GW-M6-001, 002, AND 003 FOR ADDITIONAL INFORMATION REGARDING COMPONENT NUMBERING.

3. ROUTE PIPE FROM HOT LEG CONTINUOUSLY UPWARD TO HIGH POINT PIPE STUB DOWNSTREAM OF VALVE V101. MAXIMUM ELEVATION OF PRHR HX OUTLET LINE TO THE SG CONNECTION IS LESS THAN THE PRHR HX LOWER CHANNEL HEAD TOP.

4. PRHR VALVES ARE ALSO OPENED ON DAS SIGNAL THAT ACTUATES A SEPARATE SOLENOID VALVE IN THE INSTRUMENT AIR SYSTEM.

5. IRWST HAS MULTIPLE VENTS. REFER TO SSD FOR LOCATIONSIZE REQUIREMENTS. EACH VENT HAS AN AIRTIGHT COVER THAT OPENS WITH A LOW DP.

6. LOCATE BOTH RCS GRAVITY INJECTION LINE CONNECTIONS SUCH THAT THEY DRAIN THE WHOLE IRWST. ENTRANCE PIPE HAS A ROUNDED CORNER WITH A RADIUS OF CURVATURE GREATER THAN OR EQUAL TO 1.5 INCH.

9. PRHR SIGNAL FROM PMS OVERRIDES MODULATING SIGNAL FROM POSITIONER AND OPENS VALVE.

10. PROVIDE 3/8" I.D. FLOW RESTRICTOR PER WESTINGHOUSE P&ID LEGEND DRAWING (APP-GW-M6-001).

11. IRWST HAS MULTIPLE OVERFLOWS WHICH DISCHARGE TO THE REFUELING CAVITY LOWER PIT. REFER TO SSD FOR LOCATIONSIZE REQUIREMENTS. EACH OVERFLOW HAS AN AIRTIGHT COVER THAT OPENS WITH A LOW DP.

13. GUTTER IS PROVIDED AT OPERATING DECK ELEV. TO COLLECT CONDENSATE FROM CONTAINMENT SHELL. SUMP IS PROVIDED WITH NORMALLY OPEN DRAIN TO CONTAINMENT SUMP. CLOSING V130A AND V130B CAUSES DRAIN TO OVERFLOW INTO IRWST. OVERFLOW LINE TERMINATES 6" BELOW NORMAL IRWST LEVEL. GUTTER IS COVERED BY TRASH RACK.

14. THREE REDUNDANT CONTAINMENT WATER LEVEL INSTRUMENTS ARE PROVIDED COVERING CONTAINMENT LEVEL FROM BOTTOM OF REACTOR VESSEL CAVITY TO MAXIMUM FLOOD LEVEL.

15. IRWST GUTTER ISOLATION VALVES ALSO CLOSE ON DAS SIGNAL THAT ACTUATES A SEPARATE SOLENOID VALVE IN THE INSTRUMENT AIR SYSTEM.

16. LOCATE STRAP-ON RTD ON PIPE. APPROXIMATELY 3 FEET BELOW HIGH POINT.

17. PIPE SHOULD TERMINATE 6" BELOW NORMAL WATER LEVEL IN IRWST.

18. DELETED

19. IRWST HAS H, L, L-2, L-3 ALARMS. L-3 SETPOINT OPENS CONTAINMENT RECIRCULATION VALVES.

20. ADS STAGE 4 ACTUATION SIGNAL OR A LOW HL LEVEL SIGNAL OPENS IRWST INJECTION VALVES.

21. THIS MANUAL VALVE HAS LIMIT SWITCHES CONNECTED TO POSITION ALARMS IN MCR.

22. PROVIDE ACCESSIBILITY TO A SHORT SECTION OF PIPE FOR FREEZE SEAL INSTALLATION. SEE SSD FOR FREEZE SEAL PIPING REQUIREMENTS.

27. REMOVABLE COVER TO ALLOW FOR CHECK VALVE INSERVICE TESTING WITH MECHANICAL TEST DEVICE.

28. LOCATE RTD JUST DOWNSTREAM OF VALVE V101.

29. VALVES, V118A/B, V120A/B, V123A/B, V125A/B ALSO OPEN ON A DAS SIGNAL.

30. LOCATE IRWST INJECTION LINES (FROM IRWST TO RV) AND CONTAINMENT RECIRCULATION LINES (FROM CONTAINMENT TO IRWST INJECTION LINES) AT AN ELEVATION BELOW THE BOTTOM OR IRWST.

31. EXTEND 10" PIPE FROM IRWST SUMP INTO PXS VALVE ROOM. CHANGE TO 8" AS SOON AS ENTERING PXS ROOM.

32. TANK OVERFLOW. CHANGE SAFETY CLASSIFICATION AT TANK PENETRATION. CONNECT WATER SENSORS IN BOTTOM OF HORIZONTAL PIPE RUN.

33. TWO SEPARATE CONTAINMENT RECIRCULATION SCREENS PROVIDED. THE TWO SCREENS ARE INTERCONNECTED BY A LINE WITH A MINIMUM FLOW AREA OF 1 SQUARE FOOT.

34. FLOW METER ELEMENT INCLUDES INTEGRAL 0.375" FLOW RESTRICTOR FOR CLASS A TO B TRANSITION SIMILAR TO P&ID LEGEND SHEET 2 NOTE 7.

Figure 6.3-2

Passive Core Cooling System
Piping and Instrumentation Diagram (Sheet 2)

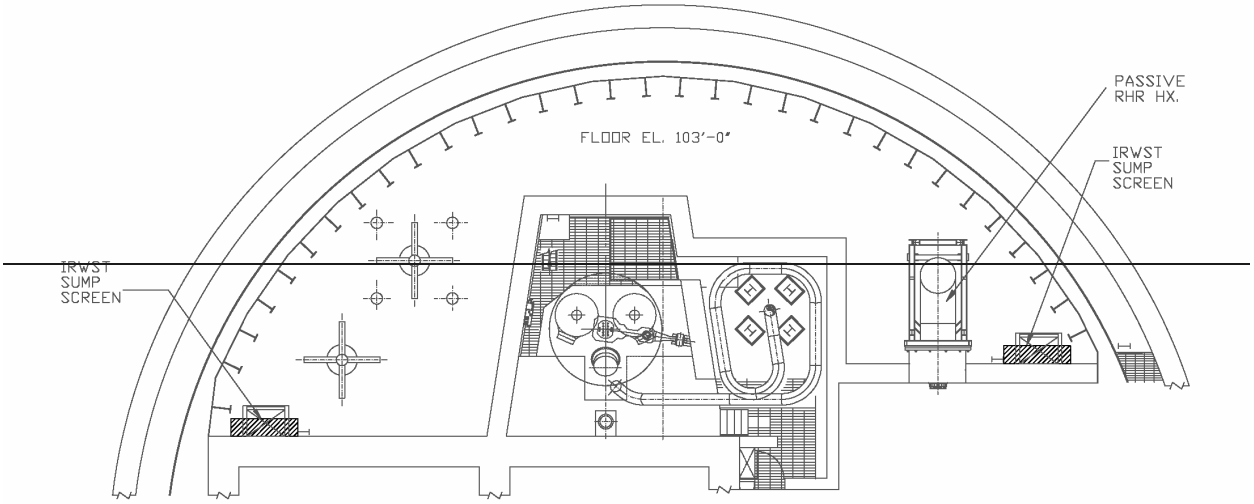
PASSIVE
RHR HX.
FLOOR EL. 103'-0"
IRWST
SUMP
SCREEN
IRWST
SUMP
SCREEN

NRC 250

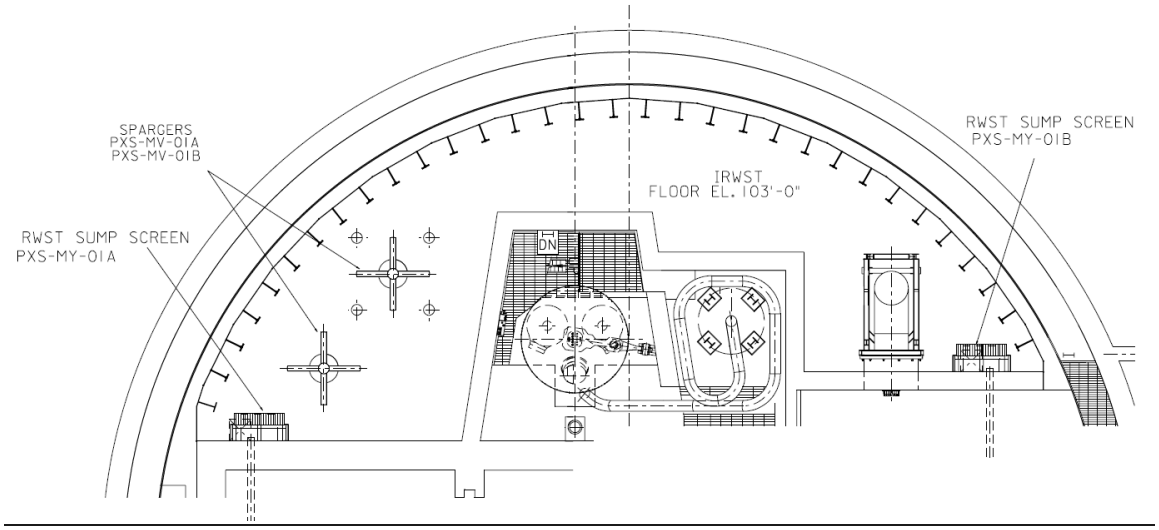

Figure 6.3-6

IRWST Screen Plan Location

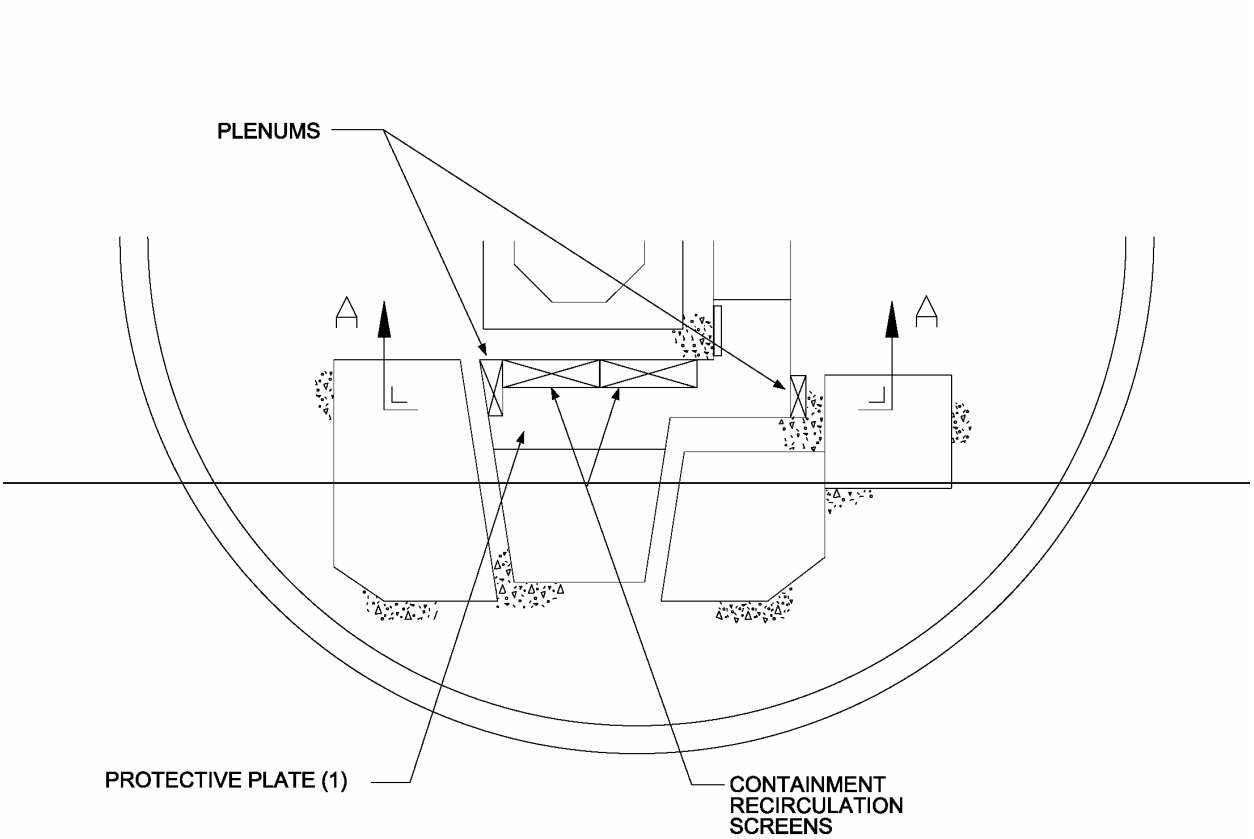
PLENUMS
PROTECTIVE PLATE (1)
CONTAINMENT
RECIRCULATION
SCREENS

NRC 250

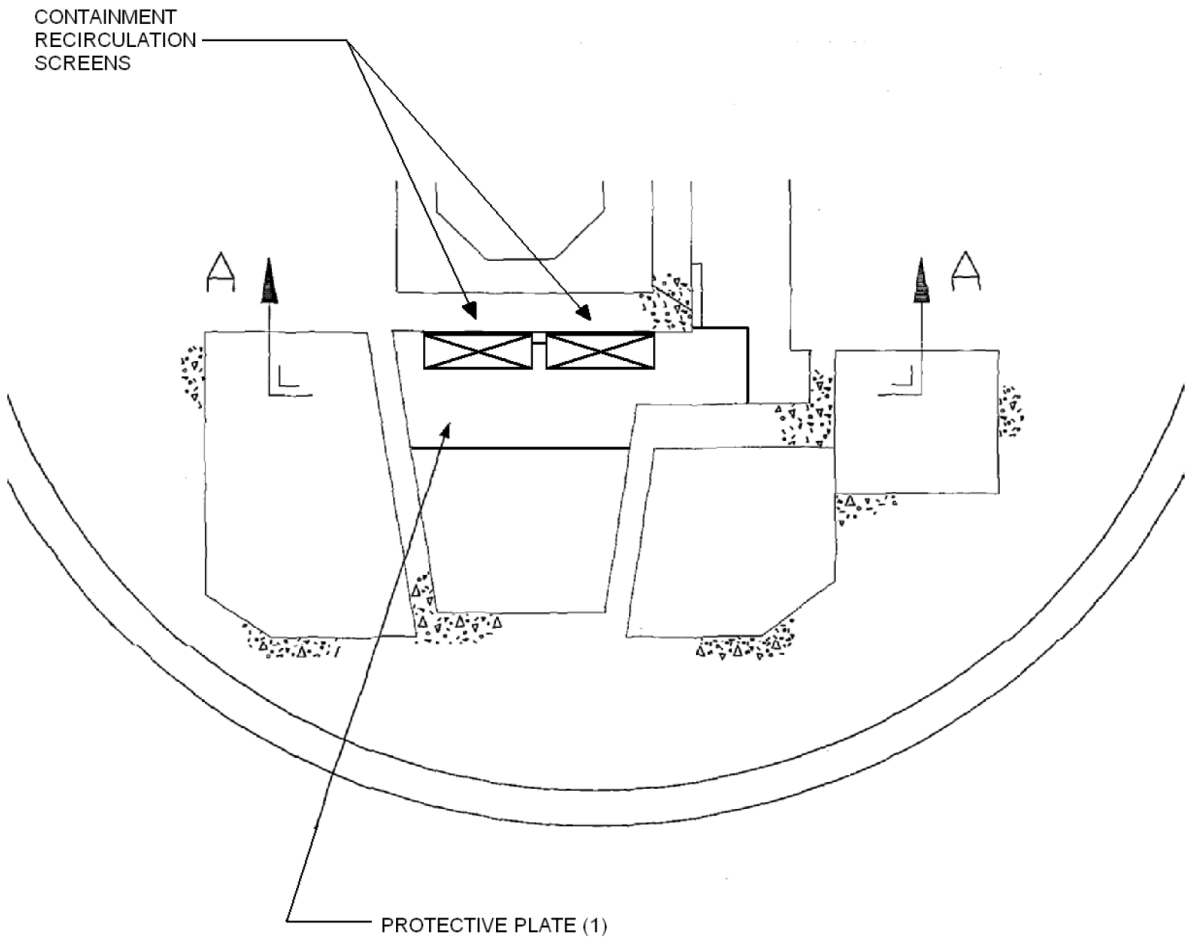

(1) MINIMUM PLATE SIZE AND ELEVATION LIMITS ARE DEFINED IN SUBSECTION 6.3.2.2.7.1

Figure 6.3-8

Containment Recirculation Screen Location Plan

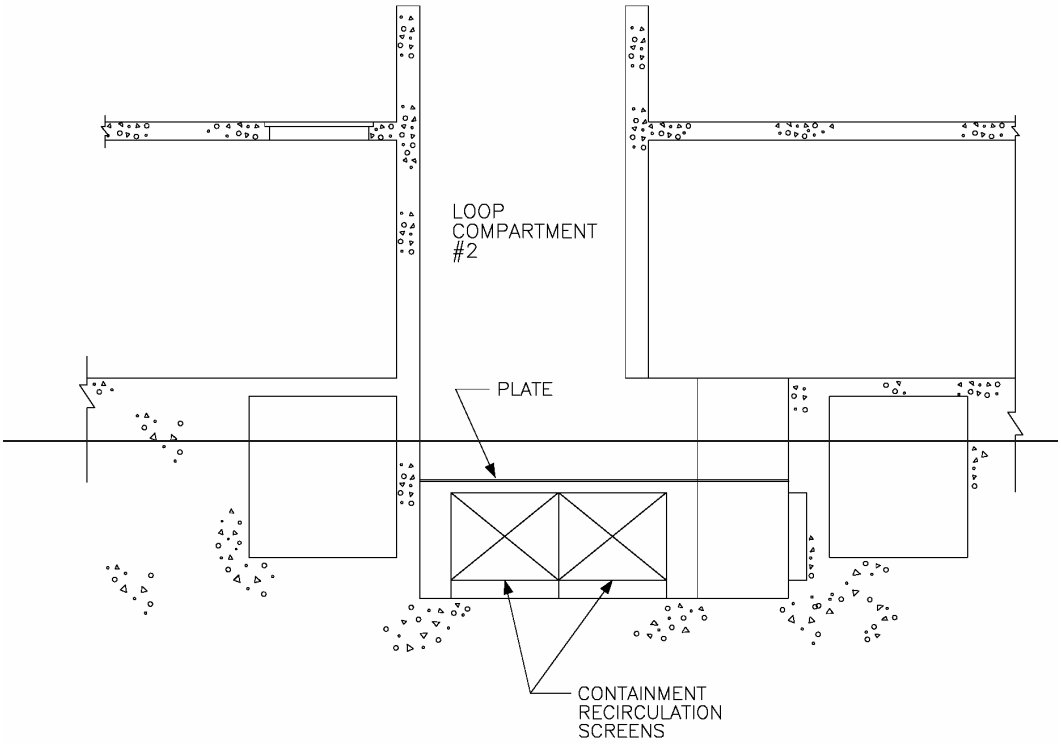

SECTION A–A

NOTE 1 – MINIMUM PLATE SIZE AND ELEVATION LIMITS ARE DEFINED IN SUBSECTION 6.3.2.2.7.1.

NRC 250

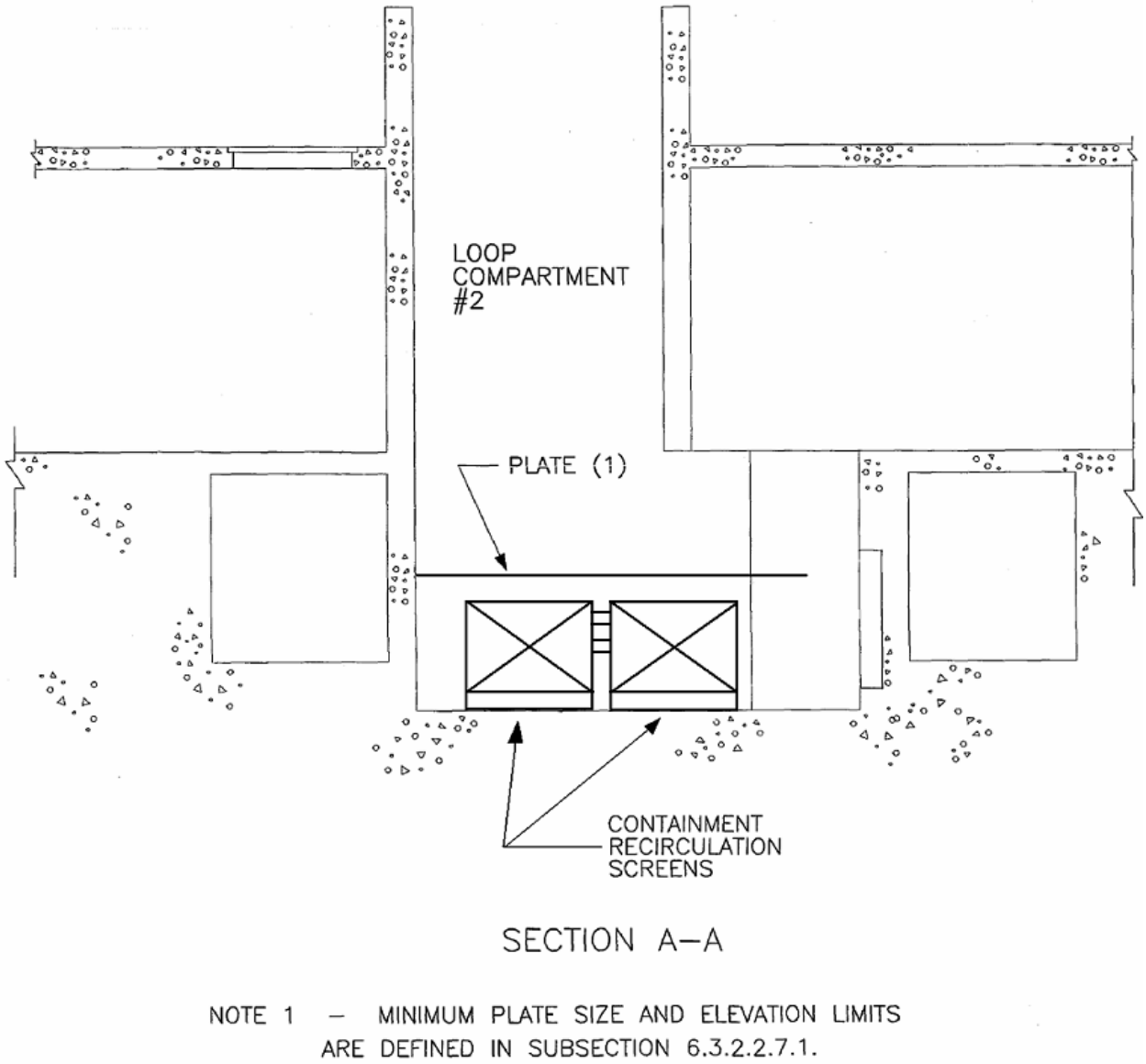

Figure 6.3-9

Containment Recirculation Screen Location Elevation

valves also open allowing the pressure relief dampers to function and discharge the damper flow to purge the vestibule.

After the main control room emergency habitability system isolation valves are opened, the air supply pressure is regulated by a self-contained regulating valve. This valve maintains a constant downstream pressure regardless of the upstream pressure. A constant air flow rate is maintained by the flow metering orifice downstream of the pressure regulating valve. This flow rate is sufficient to maintain the main control room pressure boundary at least 1/8-inch water gauge positive differential pressure with respect to the surroundings. The main control room emergency habitability system air flow rate is also sufficient to maintain the carbon dioxide levels below 0.5 percent concentration for 11 occupants and to maintain air quality within the guidelines of Table 1 and Appendix C, Table C-1, of Reference 1.

The emergency air storage tanks are sized to provide the required air flow to the main control room pressure boundary for 72 hours. After 72 hours, the main control room is cooled by drawing in outside air and circulating it through the room, as discussed in subsection 6.4.2.2.

The temperature and humidity in the main control room pressure boundary following a loss of the nuclear island nonradioactive ventilation system remain within limits for reliable human performance (References 2 and 3) over a 72-hour period. The initial values of temperature/relative humidity in the MCR are 75°F/60 percent. At 3 hours, when the non-1E battery heat loads are exhausted, the conditions are 87.2°F/41 percent. At 24 hours, when the 24 hour battery heat loads are terminated, the conditions are 84.4°F/45 percent. At 72 hours, the conditions are 85.8°F/ 39 percent.

Sufficient thermal mass is provided in the walls and ceiling of the main control room to absorb the heat generated by the equipment, lights, and occupants. The temperature in the instrumentation and control rooms and dc equipment rooms following a loss of the nuclear island nonradioactive ventilation system remains below acceptable limits as discussed in subsection 6.4.4. As in the main control room, sufficient thermal mass is provided surrounding these rooms to absorb the heat generated by the equipment. After 72 hours, the instrumentation and control rooms will be cooled by drawing in outside air and circulating it through the room, as discussed in subsection 6.4.2.2.

In the event of a loss of ac power, the nuclear island nonradioactive ventilation system isolation valves automatically close and the main control room emergency habitability system isolation valves automatically open. These actions protect the main control room occupants from a potential radiation release. In instances in which there is no radiological source term present, the compressed air storage tanks are refilled via a connection to the breathable quality air compressor in the compressed and instrument air system (CAS). The compressed air storage tanks can also be refilled from portable supplies by an installed connection in the CAS.

6.4.4 System Safety Evaluation

In the event of an accident involving the release of radioactivity to the environment, the nuclear island nonradioactive ventilation system (VBS) is expected to switch from the normal operating mode to the supplemental air filtration mode to protect the main control room personnel. Although the VBS is not a ~~non~~safety-related system, it is expected to be available to provide the necessary

NRC 233

protection for realistic events. ~~However, the accident doses were calculated based on operation of the safety-related emergency habitability system (VES), which is relied upon to limit the amount of activity the personnel are exposed to. Doses were determined for the following design basis accidents:~~However, the design basis accident doses reported in Chapter 15 utilize highly conservative assumptions and the main control room doses were calculated based on operation of the safety-related emergency habitability system (VES) since this is the system which is relied upon to limit the amount of activity the personnel are exposed to. The analyses assume that the VBS is initially in operation but fails to enter the supplemental air filtration mode on a High-1 radioactivity indication in the main control room atmosphere. VES operation is then assumed to be initiated once the High-2 level for control room atmosphere activity is reached.

NRC 233

Doses were also calculated assuming that the VBS does operate in the supplemental air filtration mode as designed, but with no switchover to VES operation, despite the fact that the High-2 radioactivity level would be exceeded for the design basis accidents. This VBS operating case demonstrates the defense-in-depth that is provided by the system and also shows that, in the event of an accident with more realistic assumptions, the VBS would be more than adequate to protect the control room operators without depending on VES operation.

Doses were determined for the following design basis:

	VES Operating	VBS Operating
Large Break LOCA	3.5~~0~~ rem TEDE	4.1 rem TEDE
Fuel Handling Accident	3.1 rem TEDE	1.6 rem TEDE
Steam Generator Tube Rupture		
(Pre-existing iodine spike)	4.8 rem TEDE	3.4 rem TEDE
(Accident-initiated iodine spike)	2.1 rem TEDE	1.8 rem TEDE
Steam Line Break		
(Pre-existing iodine spike)	3.4 rem TEDE	2.1 rem TEDE
(Accident-initiated iodine spike)	3.7 rem TEDE	4.9 rem TEDE
Rod Ejection Accident	2.5~~3~~ rem TEDE	1.8 rem TEDE
Locked Rotor Accident		
(Accident without feedwater available)	0.9 rem TEDE	0.9 rem TEDE
(Accident with feedwater available)	0.7 rem TEDE	1.6 rem TEDE
Small Line Break Outside Containment	1.4 rem TEDE	0.3 rem TEDE

NRC 233

NRC 233

NRC 233

For all events the doses are within the dose acceptance limit of 5.0 rem TEDE. The details of analysis assumptions for modeling the doses to the main control room personnel are delineated in the LOCA dose analysis discussion in subsection 15.6.5.3.

No radioactive materials are stored or transported near the main control room pressure boundary.

As discussed and evaluated in subsection 9.5.1, the use of noncombustible construction and heat and flame resistant materials throughout the plant reduces the likelihood of fire and consequential impact on the main control room atmosphere. Operation of the nuclear island nonradioactive ventilation system in the event of a fire is discussed in subsection 9.4.1.

CHAPTER 7

INSTRUMENTATION AND CONTROLS

7.1 Introduction

The instrumentation and control systems presented in this chapter provide protection against unsafe reactor operation during steady-state and transient power operations. They initiate selected protective functions to mitigate the consequences of design basis events. This chapter relates the functional performance requirements, design bases, system descriptions, and safety evaluations for those systems. The safety evaluations show that the systems can be designed and built to conform to the applicable criteria, codes, and standards concerned with the safe generation of nuclear power.

Because of the rapid changes that are taking place in the digital computer and graphic display technologies employed in a modern human system interface, design certification of the AP1000 focuses upon the process used to design and implement instrumentation and control systems for the AP1000, rather than on the specific implementation. The design specifics provided here are included as an example for illustration.

NRC 239

DCD Chapter 7 for the AP1000 has been written to describe the protection system hardware utilizing~~using~~ the Common Qualified Platform (Common Q) described in Reference~~s~~ 8 ~~and 13~~ (which includes the NRC SER). The I&C functional requirements of the AP600, which has received Design Certification, have been retained to the maximum extent compatible with the Common Q hardware and software.

The terminology used for Chapter 7 is intended to be independent of any product, but when this is not possible, Common Q terminology is used.

This chapter also discusses the instrumentation portions of the safety-related systems which function to achieve the system responses assumed in the accident analysis, and those needed to shutdown the plant. Section 7.1 describes the AP1000 instrumentation and control architecture, with specific emphasis on the protection and safety monitoring system. The plant control system is discussed briefly. Other systems are discussed in more detail in relevant sections or chapters. Section 7.2 discusses the reactor trip function, and Section 7.3 addresses the engineered safety features (ESF). Systems required for safe shutdown are discussed in Section 7.4 in support of other chapters. Safety-related display instrumentation is discussed in Section 7.5 and interlocks important to safety are presented in Section 7.6. Control systems and the diverse actuation system are discussed in Section 7.7.

Definitions

Terminology used in this chapter reflects an interdisciplinary approach to safety-related systems similar to that proposed in IEEE 603 (Reference 1).

Safety System – The aggregate of electrical and mechanical equipment necessary to mitigate the consequences of design basis events.

Protection and Safety Monitoring System – The aggregate of electrical and mechanical equipment which senses generating station conditions and generates the signals to actuate reactor trip and ESF, and which provides the equipment necessary to monitor plant safety-related functions during and following designated events.

Protective Function – Any one of the functions necessary to mitigate the consequences of a design basis event. Protective functions are initiated by the protection and safety monitoring system logic and will be accomplished by the trip and actuation subsystems. Examples of protective functions are reactor trip and engineered safety features (such as valve alignment and containment isolation).

Actuated Equipment – The assembly of prime movers and driven equipment used to accomplish a protective function (such as solenoids, shutdown rods, and valves).

Actuation Device – A component that directly controls the motive power for actuated equipment (such as circuit breakers, relays, and pilot valves).

Division – One of the four redundant segments of the safety system. A division includes its associated sensors, field wiring, cabinets, and electronics used to generate one of the redundant actuation signals for a protective function. It also includes the power source and actuation signals.

Channel – One of the several separate and redundant measurements of a single variable used by the protection and safety monitoring system in generating the signal to initiate a protective function. A channel can lose its identity when it is combined with other inputs in a division.

Degree of Redundancy – The number of redundant channels monitoring a single variable, or the number of redundant divisions which can initiate a given protective function or accomplish a given protective function. Redundancy is used to maintain protection capability when the safety-related system is degraded by a single random failure.

System-Level Actuation – Actuation of a sufficient number of actuation devices to effect a protective function.

Component-Level Actuation – Actuation of a single actuation device (component).

7.1.1 The AP1000 Instrumentation and Control Architecture

Figure 7.1-1 illustrates the instrumentation and control architecture for the AP1000. The figure shows two major sections separated by the real-time data network. Figure 7.1-1 depicts the real-time data highway as a single network. To meet cyber security concerns, the real-time data highway will be separated into security levels as described in Reference 22.

NRC 272

The lower portion of the figure includes the plant protection, control, and monitoring functions. At the lower right hand side is the protection and safety monitoring system. It performs the reactor trip functions, the engineered safety features (ESF) actuation functions, and the Qualified Data Processing (QDPS) functions. The I&C equipment performing reactor trip and ESF actuation functions, their related sensors, and the reactor trip switchgear are, for the most part, four-way redundant. This redundancy permits the use of bypass logic so that a division or individual

Protection and Safety Monitoring System – The aggregate of electrical and mechanical equipment which senses generating station conditions and generates the signals to actuate reactor trip and ESF, and which provides the equipment necessary to monitor plant safety-related functions during and following designated events.

Protective Function – Any one of the functions necessary to mitigate the consequences of a design basis event. Protective functions are initiated by the protection and safety monitoring system logic and will be accomplished by the trip and actuation subsystems. Examples of protective functions are reactor trip and engineered safety features (such as valve alignment and containment isolation).

Actuated Equipment – The assembly of prime movers and driven equipment used to accomplish a protective function (such as solenoids, shutdown rods, and valves).

Actuation Device – A component that directly controls the motive power for actuated equipment (such as circuit breakers, relays, and pilot valves).

Division – One of the four redundant segments of the safety system. A division includes its associated sensors, field wiring, cabinets, and electronics used to generate one of the redundant actuation signals for a protective function. It also includes the power source and actuation signals.

Channel – One of the several separate and redundant measurements of a single variable used by the protection and safety monitoring system in generating the signal to initiate a protective function. A channel can lose its identity when it is combined with other inputs in a division.

Degree of Redundancy – The number of redundant channels monitoring a single variable, or the number of redundant divisions which can initiate a given protective function or accomplish a given protective function. Redundancy is used to maintain protection capability when the safety-related system is degraded by a single random failure.

System-Level Actuation – Actuation of a sufficient number of actuation devices to effect a protective function.

Component-Level Actuation – Actuation of a single actuation device (component).

7.1.1 The AP1000 Instrumentation and Control Architecture

Figure 7.1-1 illustrates the instrumentation and control architecture for the AP1000. The figure shows two major sections separated by the real-time data network. Figure 7.1-1 depicts the real-time data highway as a single network. To meet cyber security concerns, the real-time data highway will be separated into security levels as described in Reference 22.

NRC 114

The lower portion of the figure includes the plant protection, control, and monitoring functions. At the ~~left~~ right is the protection and safety monitoring system. It performs the reactor trip functions, the engineered safety features (ESF) actuation functions, and the Qualified Data Processing (QDPS) functions. The I&C equipment performing reactor trip and ESF actuation functions, their related sensors, and the reactor trip switchgear are, for the most part, four-way redundant. This redundancy permits the use of bypass logic so that a division or individual channel out of service

TR-134, Rev 0

[9. *WCAP-16096-NP-A, Revision 01A, "Software Program Manual for Common Q Systems," January 2004.*]*

10. Deleted.

11. Deleted.

12. WCAP-15776, "Safety Criteria for the AP1000 Instrument and Control Systems," April 2002.

NRC 239

13. Deleted.~~WCAP-16097-P-A (Proprietary) and WCAP-16096-NP-A (Non-Proprietary), Appendix 4, "Common Qualified Platform Integrated Solution," May 2003~~.

14. Deleted.

15. Deleted.

16. Deleted.

17. WCAP-16361-P (Proprietary) and WCAP-16361-NP (Non-Proprietary), "Westinghouse Setpoint Methodology for Protection Systems – AP1000," May 2006.

NRC 239

18. APP-GW-GLR-017, AP1000 Standard Combined License Technical Report, "Resolution of Common Q NRC Items," May 2006~~Westinghouse Electric Company LLC~~.

19. WCAP-16675-P (Proprietary) and WCAP-16675-NP (Non-Proprietary), "AP1000 Protection and Safety Monitoring System Architecture Technical Report," February 2007.

20. NABU-DP-00014-GEN, Rev. 1 (Proprietary), "Design Process for Common Q Safety Systems," March 2006.

21. Westinghouse Electric Company Quality Management System (QMS), Rev. 5 (Non-Proprietary), October 1, 2002.

NRC 268

22. APP-GW-GLR-104, Rev. 1, "AP1000 Cyber Security Implementation," May 2008~~7~~.

*NRC Staff approval is required prior to implementing a change in this information; see DCD Introduction Section 3.5.

Reactor coolant pump speed is detected by a probe mounted on the reactor coolant pump frame. The speed signal is transmitted to the protection and safety monitoring system to provide the input to the trip logic function.

The reactor coolant pump underspeed trip provides a direct measurement of the parameter of interest. It permits the plant to ride through many postulated voltage or frequency dip transients without reactor trip if safety limits are not violated. Selection of the underspeed trip setpoint and time response provide for the timely initiation of reactor trip during the complete loss of flow accident and the limiting frequency decay event, consistent with the analysis results reported in Chapter 15.

The reactor coolant pump speed detectors perform their protective function (during the complete loss of flow accident and the limiting frequency decay event) in an environment (temperature, humidity, pressure, chemical, and radiation) that is not changed by the event. Therefore, it is not necessary to impose environmental qualification requirements on these detectors more restrictive than those imposed for use under rated conditions. The reactor coolant pump speed detectors are qualified for use under rated conditions with their performance verified by operation in the plant. The reactor coolant pump speed detectors are qualified to the most limiting vibrations experienced by pump operation.

NRC 240

Reactor Trip on High Reactor Coolant Pump Bearing Water Temperature

This trip is an anticipatory trip based on the expectation of a complete loss of reactor coolant flow if cooling water is lost to the reactor coolant pumps. This trip occurs before the reactor coolant pumps are tripped on the same measurement.

The reactor trip on high reactor coolant pump bearing water temperature in any single reactor coolant pump is automatically blocked when reactor power is below the P-10 permissive setpoint. This enhances reliability by preventing unnecessary reactor trips. The trip is automatically reset when reactor power is above the P-10 setpoint.

Figure 7.2-1, sheet 5, shows the logic for this trip.

7.2.1.1.4 Primary Overpressure Trips

Pressurizer High Pressure Reactor Trip

This trip protects the reactor coolant system against system overpressure. The same sensors used for the pressurizer low pressure reactor trip are used for the high pressure trip except that separate setpoints are used. The high pressurizer pressure protection trips the reactor when two out of the four pressurizer pressure channels exceed the trip setpoint. There are no interlocks or permissives associated with this trip function.

Figure 7.2-1, sheet 6, shows the logic for this trip.

Table 7.2-1 (Sheet 1 of 3)

REACTOR TRIP VARIABLES, LIMITS, RANGES, AND ACCURACIES (DESIGN BASIS FOR REACTOR TRIP) (NOMINAL)

NRC 240

Protective Functions	Variables	Range of Variables	Typical Accuracy(1)	Typical Response Time (Sec)(2)
Source Range High Neutron Flux	Neutron flux	6 decades of neutron flux: 1 to 10^6 counts per second	±10% of span	0.6
Intermediate Range High Neutron Flux	Neutron flux	8 decades of neutron flux overlapping source range by 2 decades and including 100% power	±10% of span	0.6
Power Range Neutron Flux (Low Setpoint)	Neutron flux	1 to 120% of full power	±5% of span	0.6
Power Range Neutron Flux (High-Setpoint)	Neutron flux	1 to 120% of full power	±5% of span	0.6
Power Range High Positive Flux Rate	Neutron flux	1 to 120% of full power	±1% of span	0.6 (step input of 20% full power)
Overtemperature ΔT			±5% of ΔT span	
	Cold leg temp. (T_{cold})	490° to 610°F		5.5
	Hot leg temp. (T_{hot})	530° to 650°F		5.5
	Pressurizer pressure	1700 to 2500 psig	±3% of span	0.9
	Neutron flux (difference between top and bottom power range detectors)	-60 to +60% (Δφ)		0.6

NRC 240

Table 7.2-1 (Sheet 2 of 3)

REACTOR TRIP VARIABLES, LIMITS, RANGES, AND ACCURACIES (DESIGN BASIS FOR REACTOR TRIP) (NOMINAL)

Protective Functions	Variables	Range of Variables	Typical Accuracy(1)	Typical Response Time (Sec)(2)
Overpower ΔT			±4% of ΔT span	
	Cold leg temp. (T_{cold})	490° to 610°F		5.5
	Hot leg temp. (T_{hot})	530° to 650°F		5.5
	Neutron flux (difference between top and bottom power range detectors)	-60 to +60% (Δφ)		0.6
Pressurizer Low Pressure	Pressurizer pressure	1700 to 2500 psig	±3% of span	0.9
Pressurizer High Pressure	Pressurizer pressure	1700 to 2500 psig	±3% of span	0.9
Pressurizer High Water Level	Pressurizer water level	0-100% of entire cylindrical portion of pressurizer	±5% of span	0.9
Low Reactor Coolant Flow	Coolant flow	0 to 120% of rated flow	±3% of span	0.9
Low Reactor Coolant Pump Speed	Pump speed	0 to 120% of rated speed	±1% of span	0.7
Low Steam Generator Water Level	Steam generator water level	0-100% of span (narrow range taps)	±22% of span	0.9
High Steam Generator Water Level	Steam generator water level	0-100% of span (narrow range taps)	±13% of span	0.9
Reactor Coolant Pump High Bearing Water Temperature	Reactor coolant pump bearing water temperature	70°-450°F	±2% of span	5.5

Table 7.2-1 (Sheet 3 of 3)

REACTOR TRIP VARIABLES, LIMITS, RANGES, AND ACCURACIES (DESIGN BASIS FOR REACTOR TRIP) (NOMINAL)

NRC 240

Protective Functions	Variables	Range of Variables	Typical Accuracy[1]	Typical Response Time (Sec)[2]
Automatic or Manual Safeguards Actuation	See Table 7.3-4	See Table 7.3-4	See Table 7.3-4	See Table 7.3-4
Manual Reactor Trip	Control status	N/A	N/A	N/A
Automatic or Manual Depressurization System Actuation	See Table 7.3-4	See Table 7.3-4	See Table 7.3-4	See Table 7.3-4
Automatic or Manual Core Makeup Tank Injection	See Table 7.3-4	See Table 7.3-4	See Table 7.3-4	See Table 7.3-4

Notes:

1. Measurement uncertainty typical of actual applications. Harsh environment allowances have been included where applicable.
2. Delay from the time that the process variable exceeds the setpoint until the time that the control rods are free to fall into the core (includes reactor trip breaker opening delay and control rod drive mechanism gripper release delay).

Table 7.2-2 (Sheet 2 of 2)

REACTOR TRIPS

Reactor Trip[1]	No. of Channels	Division Trip Logic	Bypass Logic	Permissives and Interlocks (See Table 7.2-3)
Automatic Safeguards Actuation	4	2/4	Yes[2]	----
Automatic Depressurization System Actuation	4	2/4	Yes[2]	----
Automatic Core Makeup Tank Injection	4	2/4	Yes[2]	----
Manual Safeguards Actuation	2 controls	1/2 controls	No	----
Manual Depressurization System Actuation	4 controls	2/4 controls	No	----
NRC 240 Manual Core Makeup Tank Injection	2 controls	1/2 controls	No	----
Manual Reactor Trip	2 controls	1/2 controls	No	----

Notes:

1. Reactor Trip divisions are also bypassed with the logic as defined in 2. below.
2. Bypass Logic = 2/4 with no bypasses; 2/3 with 1 bypass; more than one bypass is not allowed.

---- No permissive or interlock.

1. Automatic or manual safeguards actuation signal (subsection 7.3.1.1)
2. High-2 containment radioactivity
3. Manual initiation

The isolation signal generated as a result of Condition 1 can be manually reset to block the isolation of the normal heat removal system lines. This is done to permit the normal residual heat removal system to operate after the occurrence of a safeguards actuation signal. Separate momentary controls are provided for resetting each division.

Condition 2 results from the coincidence of containment radioactivity above the High-2 setpoint in any two of the four divisions.

These actuation signals can be manually blocked when pressurizer pressure is below the P-11 permissive setpoint and are automatically unblocked when pressurizer pressure is above the P-11 setpoint.

Condition 3 consists of two sets of two momentary controls. Manual actuation of both controls of either of two control sets initiates closure of RNS isolation valves. A two-control simultaneous actuation prevents inadvertent actuation.

The functional logic relating to normal residual heat removal system isolation is illustrated in Figure 7.2-1, sheets 13 and 18.

7.3.1.2.21 Refueling Cavity Isolation

A signal for isolating the spent fuel pool cooling system lines is generated upon the coincidence of spent fuel pool level below the Low setpoint in two of three divisions. This helps to maintain the water inventory in the refueling cavity due to line leakage. The functional logic relating to this is illustrated in Figure 7.2-1, sheet 13.

7.3.1.2.22 Chemical and Volume Control System Letdown Isolation

A signal to isolate the letdown valves of the chemical and volume control system is generated upon the occurrence of a Low-1 hot leg level in either of the two hot leg loops. This helps to maintain reactor coolant system inventory during mid-loop operation. Thi~~s~~se signal may be manually blocked by the operator when pressurizer level is above the P-12 setpoint. The functional logic relating to this is illustrated in Figure 7.2-1, sheet 16. These letdown valves are also closed by the containment isolation function as described in subsection 7.3.1.2.1.

NRC 241

7.3.1.2.23 Pressurizer Heater Trip

Signals for disabling the operation of the pressurizer heaters are generated from any of the following conditions:

1. Core makeup tank injection alignment signal (subsection 7.3.1.2.3)
2. High-3 pressurizer water level

design bases relating to the equipment that initiates and accomplishes engineered safety features are given in WCAP-15776 (Reference 1). The design bases presented here concern the variables monitored for engineered safety features actuation and the minimum performance requirements in generating the actuation signals.

7.3.1.5.1 Design Basis: Generating Station Conditions Requiring Engineered Safety Features Actuation (Paragraph 4.1 of IEEE 603-1991)

The generating station conditions requiring protective action are identified in Table 15.0-6, which summarizes the engineered safety features as they relate to the Condition II, III, or IV events analyzed in Chapter 15.

7.3.1.5.2 Design Basis: Variables, Ranges, Accuracies, and Typical Response Times Used in Engineered Safety Features Actuation (Paragraphs 4.1, 4.2, and 4.4 of IEEE 603-1991)

The variables monitored for engineered safety features actuation are:

- Pressurizer pressure
- Pressurizer water level
- Reactor coolant temperature (T_{hot} and T_{cold}) in each loop
- Containment pressure
- Containment radioactivity level
- Steam line pressure in each steam line
- Water level in each steam generator (narrow and wide ranges)
- Source range neutron flux
- Core makeup tank level
- Reactor coolant level in each of the two hot legs
- Loss of ac power sources (low Class 1E battery charger input voltage)
- In-containment refueling water storage tank level
- Main control room supply air radioactivity level
- Reactor coolant pump bearing water temperature
- Startup feedwater flow
- Spent fuel pool level
- Reactor coolant pressure in each of the two hot legs

Subsections 7.3.1.1 and 7.3.1.2 discuss levels that result in engineered safety features actuation. The allowable values for the limiting conditions for operation and the trip setpoints for engineered safety features actuation are given in the technical specifications (Chapter 16).

NRC 241 Ranges, ~~typical~~ accuracies, and ~~typical~~ response times for the variables used in engineered safety features actuation are listed in Table 7.3-4. The time response is the maximum allowable time period for an actuation signal to reach the necessary components. It is based on following a step change in the applicable process parameter from 5 percent below to 5 percent above (or vice versa) the actuation setpoint with externally adjustable time delays set to OFF.

Table 7.3-1 (Sheet 1 of 9)

ENGINEERED SAFETY FEATURES ACTUATION SIGNALS

Actuation Signal	No. of Divisions/ Controls	Actuation Logic	Permissives and Interlocks
1. Safeguards Actuation Signal (Figure 7.2-1, Sheets 9 and 11)			
a. Low pressurizer pressure	4	2/4-BYP[1]	Can be manually blocked on presence of P-3 Block automatically removed on absence of P-3
b. Low lead-lag compensated steam line pressure	4/steam line	2/4-BYP[1] in either steam line	Can be manually blocked on presence of P-3 Block automatically removed on absence of P-3
NRC 241 c. Low ~~reactor~~ cold leg temperature (Low T_{cold})	4/loop	2/4-BYP[1] either loop[6]	Can be manually blocked on presence of P-3 Block automatically removed on absence of P-3
d. High-2 containment pressure	4	2/4-BYP[1]	Can be manually blocked on presence of P-3 Block automatically removed on absence of P-3
e. Manual safeguards initiation	2 controls	1/2 controls	None
2. Containment Isolation (Figure 7.2-1 Sheets 11 and 13)			
a. Automatic or manual safeguards actuation signal	(See items 1a through 1e)		
b. Manual initiation	2 controls	1/2 controls	None
c. Manual initiation of passive containment cooling	(See item 10a)		
3. Automatic Depressurization System (Figure 7.2-1, Sheet 15) **(Initiate Stages 1, 2, and 3)**			
a. Core makeup tank injection coincident with	(See items 6a through 6e)		
Core makeup tank level less than Low-1 setpoint	4/tank	2/4-BYP[1] either tank[2]	None
b. Extended undervoltage to Class 1E battery chargers[(8)]	2/charger	1/2 per charger and 2/4 chargers	None

Table 7.3-1 (Sheet 4 of 9)

ENGINEERED SAFETY FEATURES ACTUATION SIGNALS

Actuation Signal	No. of Divisions/ Controls	Actuation Logic	Permissives and Interlocks
6. Core Makeup Tank Injection (Figure 7.2-1, Sheets 7, 12 and 15)			
a. Safeguards actuation signal (automatic or manual)	(See items 1a through 1e)		
b. Automatic reactor coolant system depressurization (first stage)	(See items 3a through 3c)		
c. Low-2 pressurizer level	4	2/4-BYP[1]	Manual block permitted below P-12 Automatically unblocked above P-12
d. Low wide range steam generator water level coincident with	4/steam generator	2/4-BYP[1] in both steam generators	None
High hot leg temperature (High T_{hot})[(8)]	2/loop	2/4-BYP[1]	None
e. Manual initiation	2 controls	1/2 controls	None
7. Turbine Trip (Figure 7.2-1, Sheet 14)			
a. Manual feedwater isolation	(See item 4b)		
b. Reactor trip (P-4)	1/division	2/4	None
c. High-2 steam generator narrow range level	4/steam generator	2/4-BYP[1] in either steam generator	None
8. Steam Line Isolation (Figure 7.2-1, Sheet 9)			
a. Manual initiation	2 controls	1/2 controls	None
b. High-2 containment pressure	4	2/4-BYP[1]	None
c. Low lead-lag compensated steam line pressure[4]	4/steam line	2/4-BYP[1] in either steam line	Manual block permitted below P-11 Automatically unblocked above P-11
d. High steam line negative pressure rate	4/steam line	2/4-BYP[1] in either steam line[7]	Manual unblock permitted below P-11 Automatically blocked above P-11
NRC 241 e. Low cold leg~~reactor coolant inlet~~ temperature (Low T_{cold})	4/loop	2/4-BYP[1] either loop[6]	Manual block permitted below P-11 Automatically unblocked above P-11

Table 7.3-1 (Sheet 8 of 9)

ENGINEERED SAFETY FEATURES ACTUATION SIGNALS

Actuation Signal	No. of Divisions/ Controls	Actuation Logic	Permissives and Interlocks
21. Open In-Containment Refueling Water Storage Tank (IRWST) Injection Line Valves (Figure 7.2-1, Sheets 12 and 16)			
a. Automatic reactor coolant system depressurization (fourth stage)	(See items 3d and 3e)		
b. Manual initiation	4 controls	2/4 controls[3]	None
22. Open Containment Recirculation Valves In Series with Check Valves (Figure 7.2-1, Sheet 15 and 16)			
a. Extended undervoltage to Class 1E battery chargers[(8)]	2/charger	1/2 per charger and 2/4 chargers	None
23. Open All Containment Recirculation Valves (Figure 7.2-1, Sheet 16)			
a. Automatic reactor coolant system depressurization (fourth stage) coincident with		(See items 3d through 3f)	
Low IRWST level (Low-3 setpoint)	4	2/4 BYP[1]	None
b. Manual initiation	4 controls	2/4 controls[3]	None
24. Chemical and Volume Control System Letdown Isolation (Figure 7.2-1, Sheet 16)			
a. Low-1 hot leg level	1 per loop	1/2	Manual block permitted above P-12 Automatically unblocked below P-12
25. Pressurizer Heater Trip (Figure 7.2-1, Sheets 6 and 12)			
a. Core makeup tank injection	(See items 6a through 6e)		
b. High-3 pressurizer level	4	2/4 BYP[1]	Manual block permitted below P-19 Automatically unblocked above P-19

NRC 241

Table 7.3-4 (Sheet 1 of 2)

ENGINEERED SAFETY FEATURES ACTUATION, VARIABLES, LIMITS, RANGES, AND ACCURACIES (NOMINAL)

Variable	Range of Variable	Typical Accuracy(1)	Typical Response Time (Sec)(2)
Pressurizer pressure	1700 to 2500 psig	±14% of span	1.0
Steam line pressure	500 to 1300 psig	±3% of span (Normal environment) ±10% of span (Adverse environment)	1.0
Steam line negative pressure rate	0 to 250 psig/sec	±0.2% of span	1.0
Cold leg temperature (T_{cold})	490 to 610°F	±3% of span	5.5
Hot leg temperature (T_{hot})	530 to 650°F	±2% of span	5.5
Containment pressure	-5 to 10 psig	±3% of span	1.0
Reactor coolant system hot leg level	0 to 100% of span	±5% of span	1.0
In-containment refueling water storage tank level	0 to 100% of span	±6% of span	1.0
Undervoltage on input of ~~Class~~ 1E battery charger	0 to 500 V	±2% of setpoint	1.5
Steam generator narrow range water level	0 to 100% of span (narrow range taps)	±22% of span	1.0
Steam generator wide range water level	0 to 100% of span (wide range taps)	±32% of span	1.0
Core makeup tank narrow range upper water level	0 to 100% of span	±40% of span	1.0
Core makeup tank narrow range lower water level	0 to 100% of span	±40% of span	1.0
Reactor coolant pump bearing temperature	70 to 450°F	±2% of span	5.5
Spent fuel pool level	0 to 26 feet	±3% of span	1.0
Reactor coolant system wide range pressure	0 to 3300 psig	±3% of span	1.0

NRC 241

Table 7.5-1 (Sheet 10 of 12)

POST-ACCIDENT MONITORING SYSTEM

Variable	Range/ Status	Type/ Category	Qualification		Number of Instruments Required	Power Supply	QDPS Indication (Note 2)	Remarks
			Environmental	Seismic				
IRWST to RNS suction valve status	Open/ Closed	B1, F3	Harsh	Yes	1 (Note 7)	1E	Yes	
RNS discharge to IRWST valve status	Open/ Closed	F3	None	None	1/valve	Non-1E	No	
RNS pump status	On/Off	F3	None	None	1/pump	Non-1E	No	
Reactor vessel head vent valve status	Open/ Closed	D2	Harsh	Yes	1/valve (Note 7)	1E	Yes	
MCR return air isolation valve status	Open/ Closed	D2, F3	Mild	Yes	1/valve (Note 7)	1E	Yes	
MCR toilet exhaust isolation valve status	Open/ Closed	D2	Mild	Yes	1/valve (Note 7)	1E	Yes	
MCR supply air isolation valve status	Open/ Closed	D2, F3	Mild	Yes	1/valve (Note 7)	1E	Yes	
MCR differential pressure	-1" to +1" wg	D2	Mild	Yes	2	1E	Yes	
MCR air delivery flowrate	0-80 cfm	D2	Mild	Yes	2	1E	Yes	
MCR pressure relief isolation valve status	Open/ Closed	D2	Mild	Yes	1/valve	1E	Yes	

NRC 241

axial offset are input into the axial offset control subsystem and then compared to an axial offset control "window." This window is calculated from measurements of compensated excore nuclear flux, along with operator inputs for the desired axial offset target value and target bandwidth and the mode of control (load follow, load regulation, or base load). The nuclear flux signals are compensated by measurements of cold leg temperature to account for the effects of moderation of the neutron flux by the reactor vessel downcomer flow. If the plant is in a load regulation mode of control, then lag compensation is applied to both the nuclear flux and the axial offset signals. This provides a smoothed nuclear flux and axial offset signal input to the axial offset controller to avoid unnecessary~~rapid temporary changes from actuating~~ axial offset control. When the axial offset error is outside the acceptable control window, the axial offset rods are actuated until the axial offset error is back inside the control window.

NRC 241

To minimize the potential for interactions between the power and the axial offset rod control subsystems, the power control subsystem takes precedence. If a demand signal exists for movement of the power control rods, then the axial offset rods are blocked from moving. Only when the temperature error is within the reactor power controller deadband and the associated rod banks have stopped are the axial offset rods allowed to move.

7.7.1.2 Rod Control System

The rod control system receives rod speed and direction signals from the power control and axial offset control subsystems. The portion of the rod control system associated with the power and axial offset control subsystems each operate their own sets of control rod banks as follows:

- The power control portion operates the MA, MB, MC, MD, M1 and M2 control rod banks.
- The axial offset control portion operates the AO control rod bank.

For power control, the rod speed demand signals vary over the range of 5 to 45 inches per minute (8 to 72 steps per minute), depending on the magnitude of the input signal. Manual control is provided to move a bank in or out at a prescribed fixed speed. In the automatic mode, the rods are withdrawn (or inserted) in a predetermined sequence within the limits imposed by the control interlocks as shown in Table 7.7-1.

For axial offset control, the rod speed demand signals are set to a fixed constant speed of approximately 5 inches per minute (8 steps per minute). Manual control is provided to move a bank in or out at a prescribed fixed speed. In the automatic mode, the rods are withdrawn (or inserted) within the limits imposed by the control interlocks, as shown in Table 7.7-2.

The shutdown control rod banks are always in the fully withdrawn position during normal operation and are moved to this position at a constant speed by manual control prior to criticality. A reactor trip signal causes them to fall by gravity into the core. There are four shutdown control rod banks.

The power and axial offset control rod banks are the only rods that can be manipulated under automatic control. Each bank contains one or more groups of four control rod assemblies. Each control rod assembly in a group is electrically paralleled to move simultaneously. There is individual position indication for each control rod assembly.

rate/lag circuit, similar to that used for steam dump control), the circuit provides a signal demanding the release of a preselected number of control rods. The dropping of these preselected rods causes the reactor power to rapidly reduce to approximately 50-percent power.

The large load rejection also actuates the steam dump system and the reactor power control system via a primary-to-secondary power mismatch signal. Following the initiation of the load rejection, the power control rods insert in a controlled manner due to the mismatch between the programmed reference average coolant temperature (based on turbine impulse chamber pressure) and the compensated average coolant temperature measured in the reactor coolant loops. In a similar manner, the load rejection steam dump controller controls the steam dump valves to prevent a large increase in reactor coolant temperature. Following the release of the preselected control rods, the power control system continues to insert the remaining control group control rods to reduce power (by temperature control channel trying to match T_{avg} to T_{ref}). Following the initial opening, the steam dump valves modulate closed based upon the (T_{avg} - T_{ref}) signal.

Controlled rod insertion and steam dump modulation continue until power is reduced to approximately 15-percent power. At this time, the rod motion ceases and the plant stabilizes with steam dump maintained to match the steam flow to the thermal load. The operators can then switch to pressure mode of control on the steam dump control system, recover the released control rods, and establish normal rod control. A normal power escalation is then performed through the following actions: resynchronize the turbine/generator, if necessary, perform turbine loading until the steam dumps close, reset the steam dump controller, place the plant back into automatic, and return to the desired power level.

7.7.1.10.1 Rod Block Interlock

To avoid the potential for a withdrawal of the normally functioning power control rods following the rod release by the rapid power reduction system, a rod withdrawal block is actuated. Actuation occurs by the reduction of reactor power (P-17) after the initiation of the rapid power reduction system as discussed in subsection 7.2.1.1.11. The rod withdrawal block does not adversely impact the performance of the rapid power reduction system. The demand of the power control subsystem is a continuous rod insertion. Rod withdrawal during the power reduction phase is not required.

7.7.1.10.2 Rapid Power Reduction Rod Selection

The number of rods needed to obtain this power reduction is dependent on the core burnup during the fuel cycle. In addition, if a large load rejection (grid disconnect) is initiated at a part-power condition (50-percent to 100-percent power), then a reduced number of control rods need to be released. Therefore, a means is provided to alter~~have the control system select~~ which rods will be released by the rapid power reduction system. Following operator concurrence, suggested changes are implemented in the rod control logic cabinet.

NRC 241

The selection of the rods that are released during the rapid power reduction is based on a thermal power measurement. The thermal power is integrated over time to arrive at a core burnup. Depending on the core burnup and the plant power level, the choice of the control rods to be released by the rapid power reduction system is determined. Capability is provided for the

source. Bus transfer to the maintenance source is manual or automatic through a fast bus transfer scheme.

The arrangement of the 6.9 kV buses permits feeding functionally redundant pumps or groups of loads from separate buses and enhances the plant operational flexibility. The 6.9 kV switchgear powers large motors, and the load center transformers. There are two switchgear (ES1 and ES2) located in the annex building, and five (ES3, ES4, ES5, ES6, and ES7) in the turbine building.

The main stepup transformers have protective devices for sudden pressure, neutral overcurrent, and differential current. The unit auxiliary transformers have protective devices for sudden pressure, overcurrent, differential current, and neutral overcurrent. The isophase bus duct has ground fault protection. If these devices sense a fault condition the following actions will be automatically taken:

- Trip high-side (grid) breaker
- Trip generator breaker
- Trip exciter field breaker
- Trip the 6.9 kV buses connected to the faulted transformer
- Initiate a fast bus transfer of ES1-ES6 6.9kV busses ES1-ES6.

NRC 252

The reserve auxiliary transformers have protective devices for sudden pressure, overcurrent~~, and~~ differential current and neutral overcurrent. The reserve auxiliary transformers protective devices trip the reserve supply breaker and any 6.9 kV buses connected to the reserve auxiliary transformers.

The onsite standby power system powered by the two onsite standby diesel generators supplies power to selected loads in the event of loss of normal, and preferred ac power supplies followed by a fast bus transfer to the reserve auxiliary transformers. Those loads that are priority loads for defense-in-depth functions based on their specific functions (permanent nonsafety loads) are assigned to buses ES1 and ES2. These plant permanent nonsafety loads are divided into two functionally redundant load groups (degree of redundancy for each load is described in the sections for the respective systems). Each load group is connected to either bus ES1 or ES2. Each bus is backed by a non-Class 1E onsite standby diesel generator. In the event of a loss of voltage on these buses, the diesel generators are automatically started and connected to the respective buses. In the event of a fast bust transfer, the diesel connection to the bus is delayed such that the fast bus and residual transfer is allowed to initiate. The source incoming breakers on switchgear ES1 and ES2 are interlocked to prevent inadvertent connection of the onsite standby diesel generator and preferred/maintenance ac power sources to the 6.9 kV buses at the same time. The diesel generator, however, is capable of being manually paralleled with the preferred or reserve power supply for periodic testing. Design provisions protect the diesel generators from excessive loading beyond the design maximum rating, should the preferred power be lost during periodic testing. The control scheme, while protecting the diesel generators from excessive loading, does not compromise the onsite power supply capabilities to support the defense-in-depth loads. See subsection 8.3.1.1.2 for starting and load sequencing of standby diesel generators.

The reactor coolant pumps (RCPs) are powered from the four switchgear buses located in the turbine building, one RCP per bus. Variable-speed drives are provided for RCP startup and for

Table 9.1-1

LOADS AND LOAD COMBINATIONS FOR FUEL RACKS

Load Combination	Service Level
$D + L$ $D + L + T_o$	Level A
$D + L + T_a$ $D + L + T_o + P_f$	Level B
$D + L + T_a + E'$	Level D
$D + L + F_d$	The functional capability of the fuel racks should be demonstrated.

NRC 257

Notes:

1. There is no operating basis earthquake (OBE) for the AP1000 plant.
2. The fuel racks are freestanding; thus, there is minimal or no restraint against free thermal expansion at the base of the rack. As a result, thermal loads applied to the rack (T_o and T_a) produce only local (secondary) stresses.

NRC 257 Abbreviations are those used in NUREG-0800, Section 3.8.4 (including Appendix D~~B~~) of the Standard Review Plan (SRP):

D = Dead weight induced loads (including fuel assembly weight)
L = Live load (not applicable to fuel racks since there are no moving objects in the rack load path)
F_d Force caused by the accidental drop of the heaviest load from the maximum possible height
P_f = Upward force on the racks caused by postulated stuck fuel assembly
E' = Safe shutdown earthquake (SSE)
T_o = Differential temperature induced loads based on the most critical transient or steady-state condition under normal operation or shutdown conditions
T_a = Differential temperature induced loads based on the postulated abnormal design conditions

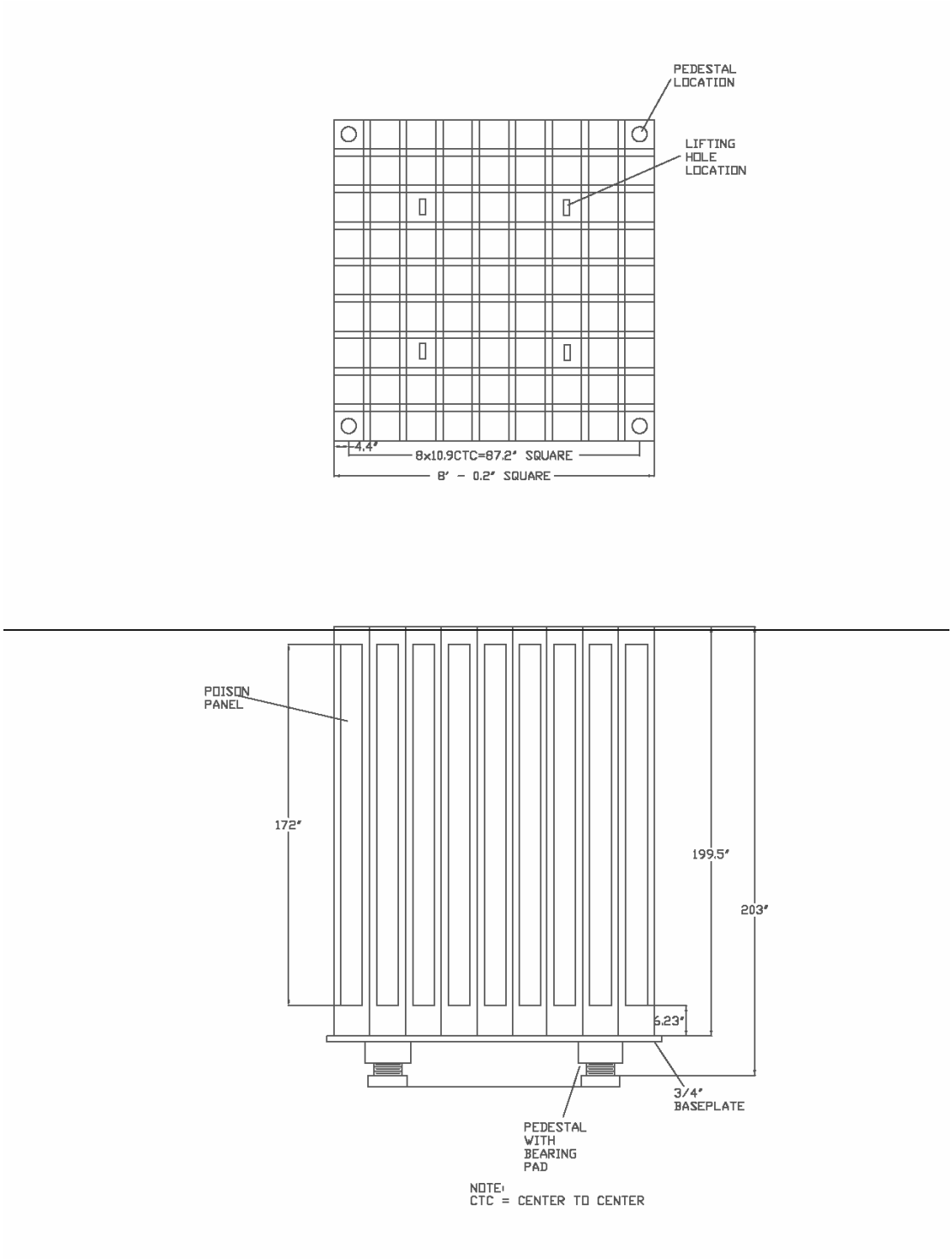
PEDESTAL LOCATION
LIFTING HOLE LOCATION
4.4"
8x10.9CTC=87.2" SQUARE
8' - 0.2" SQUARE
POISON PANEL
172"
199.5"
203"
6.23"
3/4" BASEPLATE
PEDESTAL WITH BEARING PAD
NOTE:
CTC = CENTER TO CENTER

NRC 256

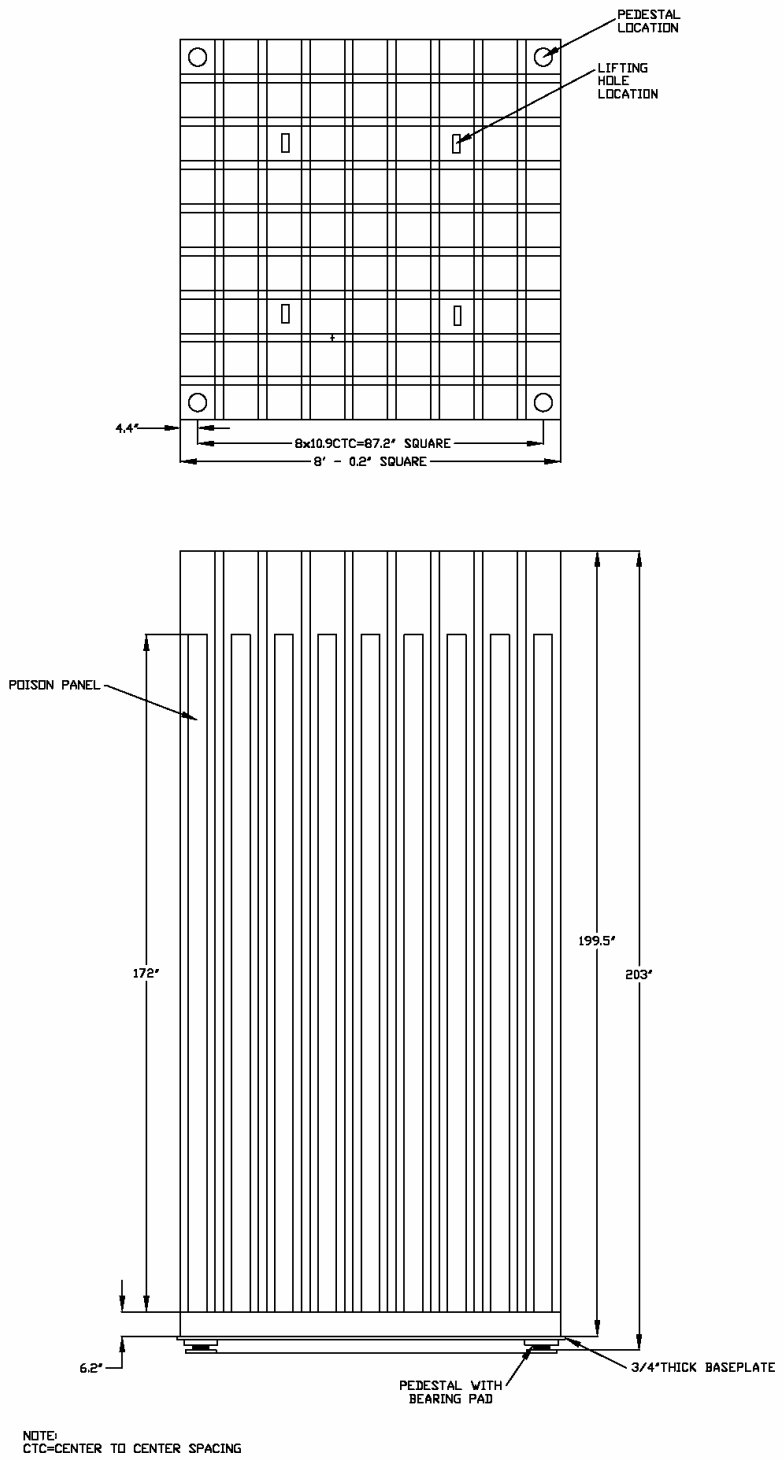

Figure 9.1-2 (Sheet 1 of 2)

Region 1 Spent Fuel Storage Rack Layout

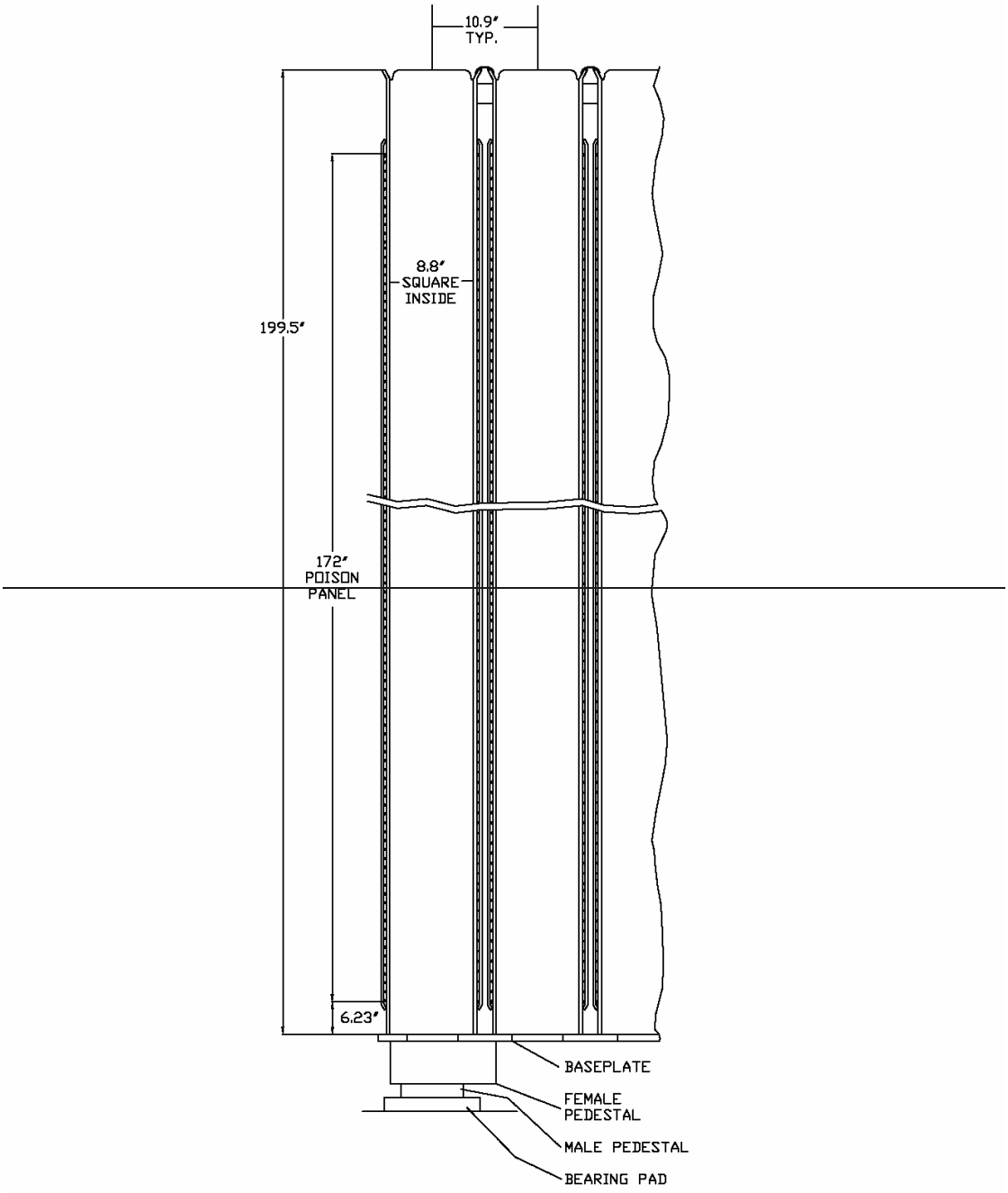
10.9"
TYP.
8.8"
SQUARE
INSIDE
199.5"
172"
POISON
PANEL
6.23"
BASEPLATE
FEMALE
PEDESTAL
MALE PEDESTAL
BEARING PAD

NRC 256

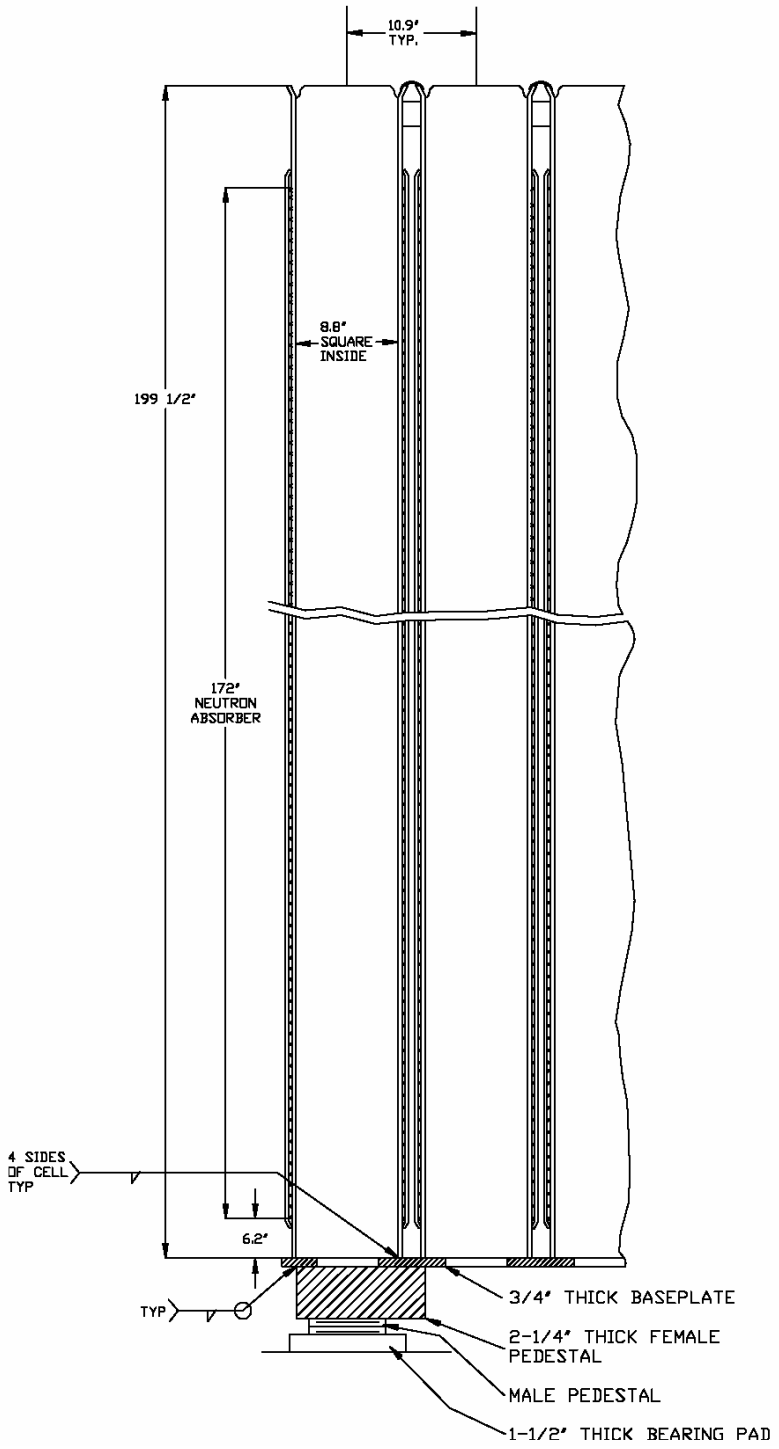

Figure 9.1-2 (Sheet 2 of 2)

Region 1 Spent Fuel Storage Rack Cross Section

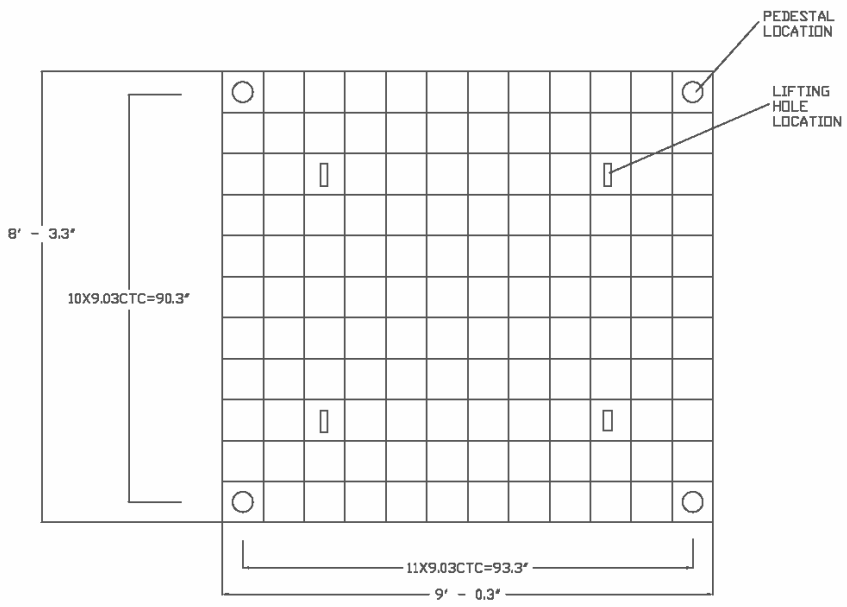
PEDESTAL
LOCATION
LIFTING
HOLE
LOCATION
8' - 3.3"
10X9.03CTC=90.3"
11X9.03CTC=93.3"
9' - 0.3"

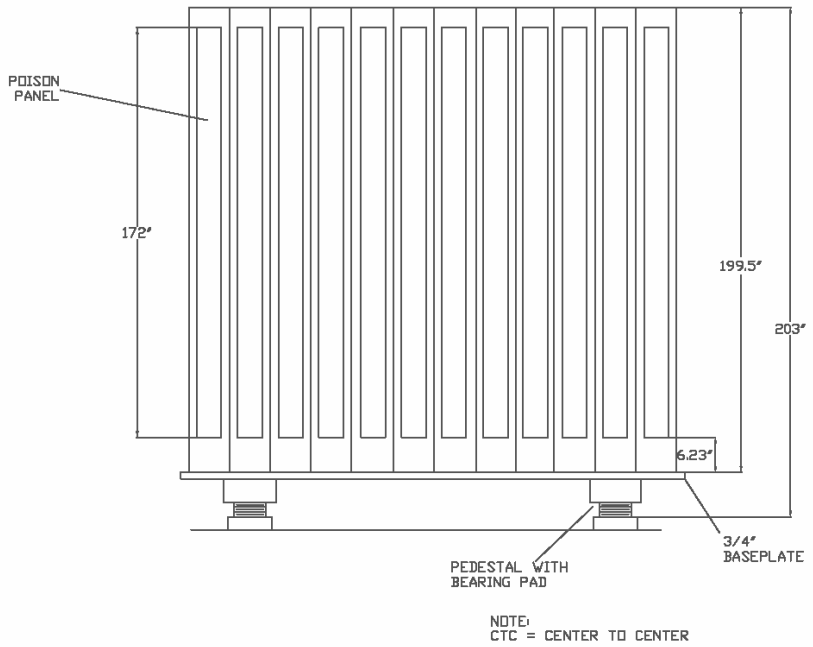
POISON
PANEL
172"
199.5"
203"
6.23"
3/4"
BASEPLATE
PEDESTAL WITH
BEARING PAD
NOTE:
CTC = CENTER TO CENTER

NRC 256

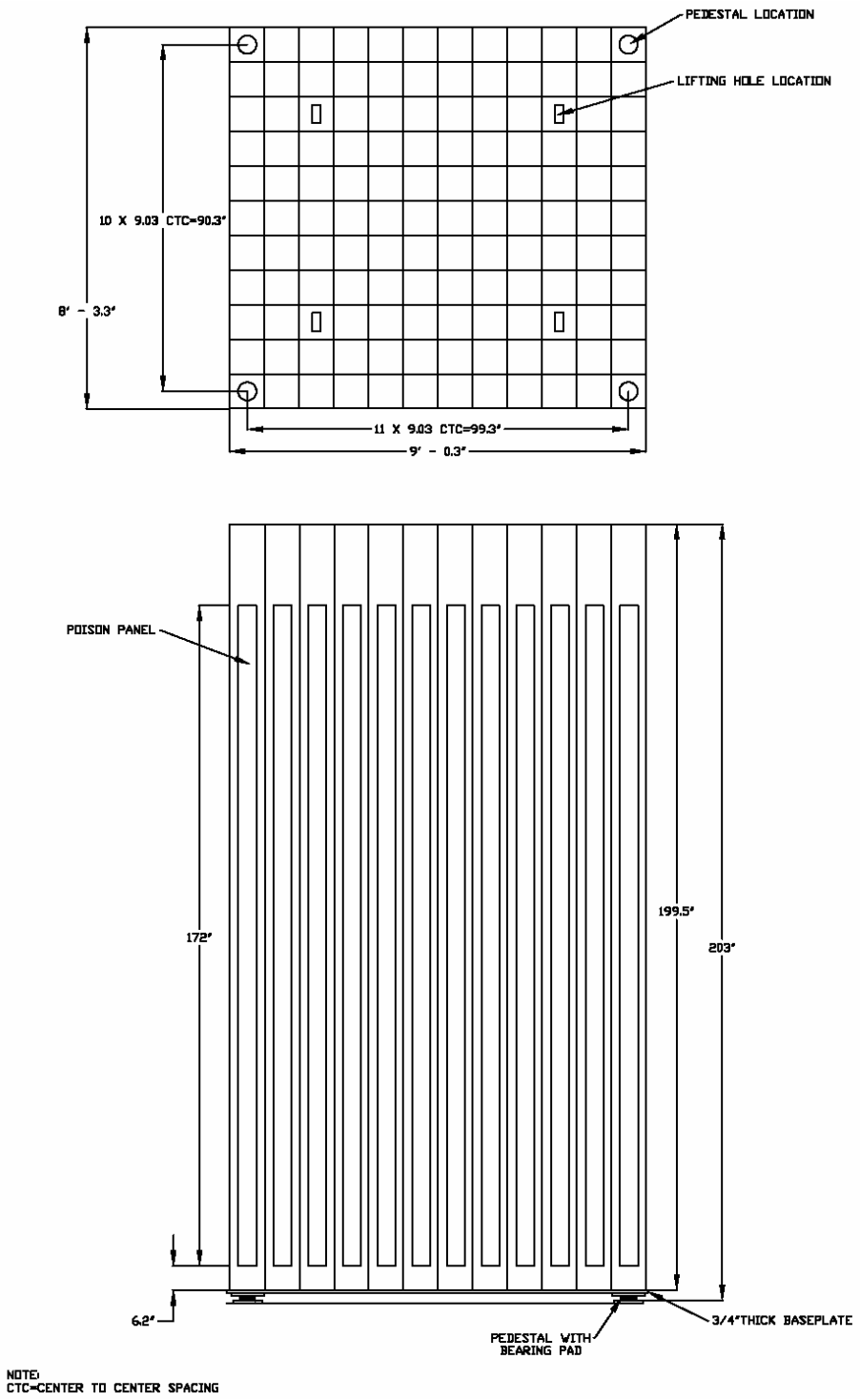

Figure 9.1-3 (Sheet 1 of 2)

Region 2 Spent Fuel Storage Rack Layout

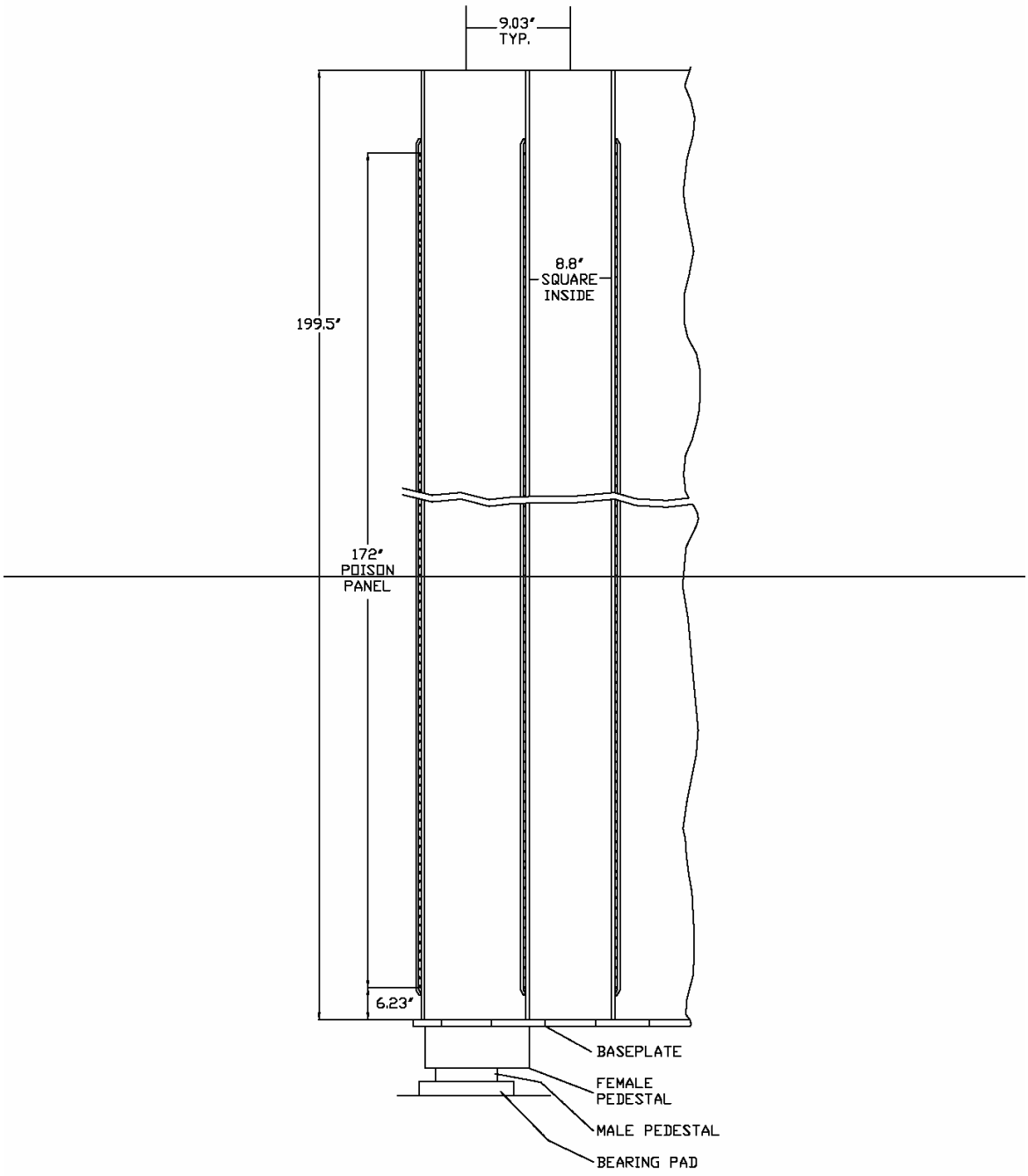
9.03"
TYP.
8.8"
SQUARE
INSIDE
199.5"
172"
POISON
PANEL
6.23"
BASEPLATE
FEMALE
PEDESTAL
MALE PEDESTAL
BEARING PAD

NRC 256

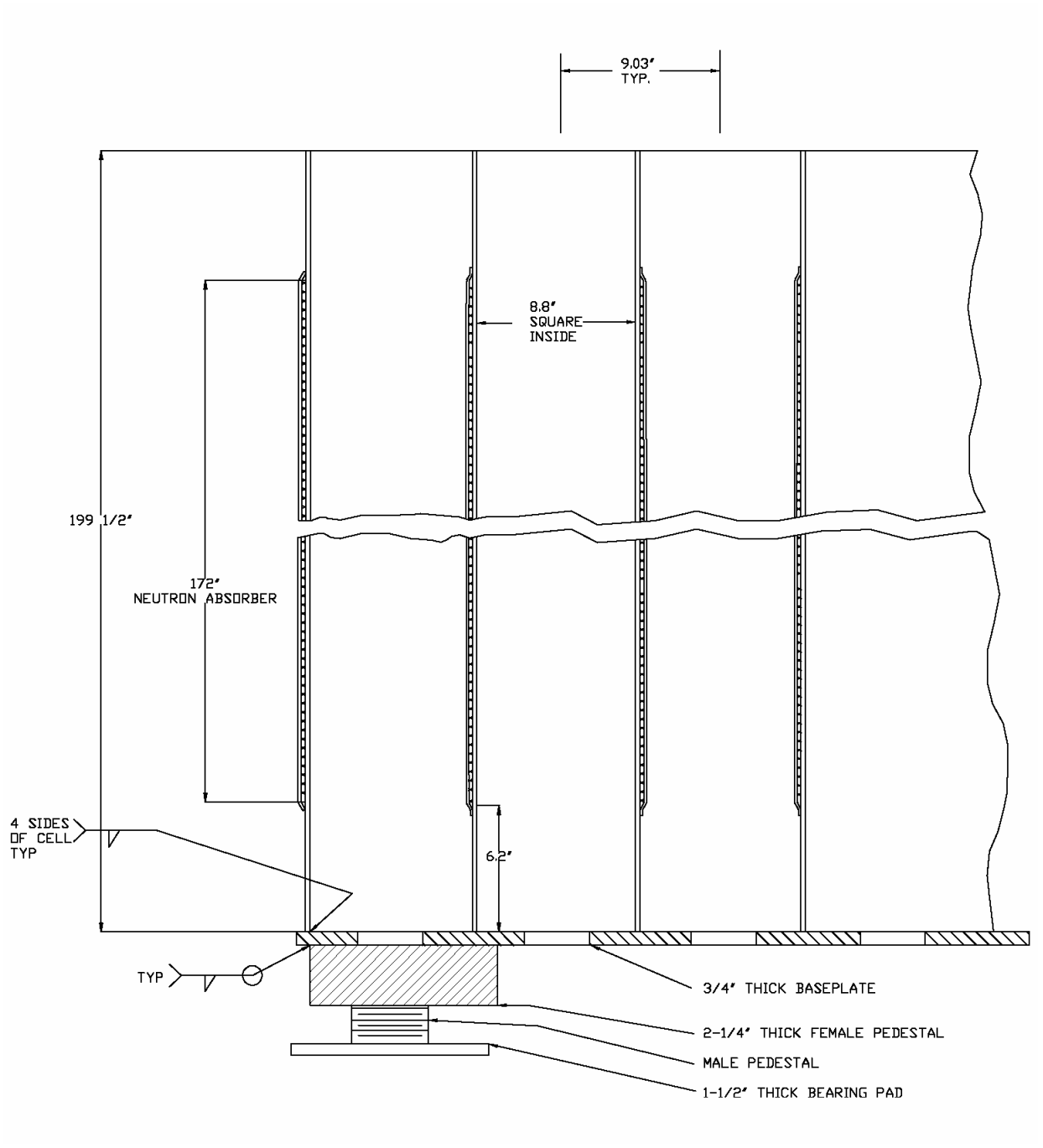

Figure 9.1-3 (Sheet 2 of 2)

Region 2 Spent Fuel Storage Rack Cross Section

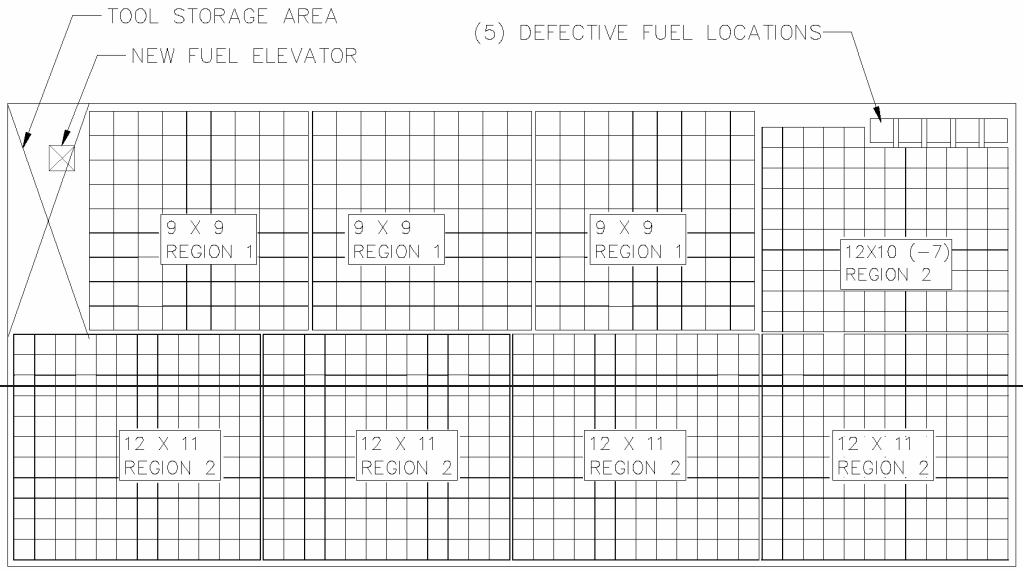
TOOL STORAGE AREA
NEW FUEL ELEVATOR
(5) DEFECTIVE FUEL LOCATIONS
9 X 9
REGION 1
9 X 9
REGION 1
9 X 9
REGION 1
12X10 (-7)
REGION 2
12 X 11
REGION 2
12 X 11
REGION 2
12 X 11
REGION 2
12 X 11
REGION 2

NRC 256

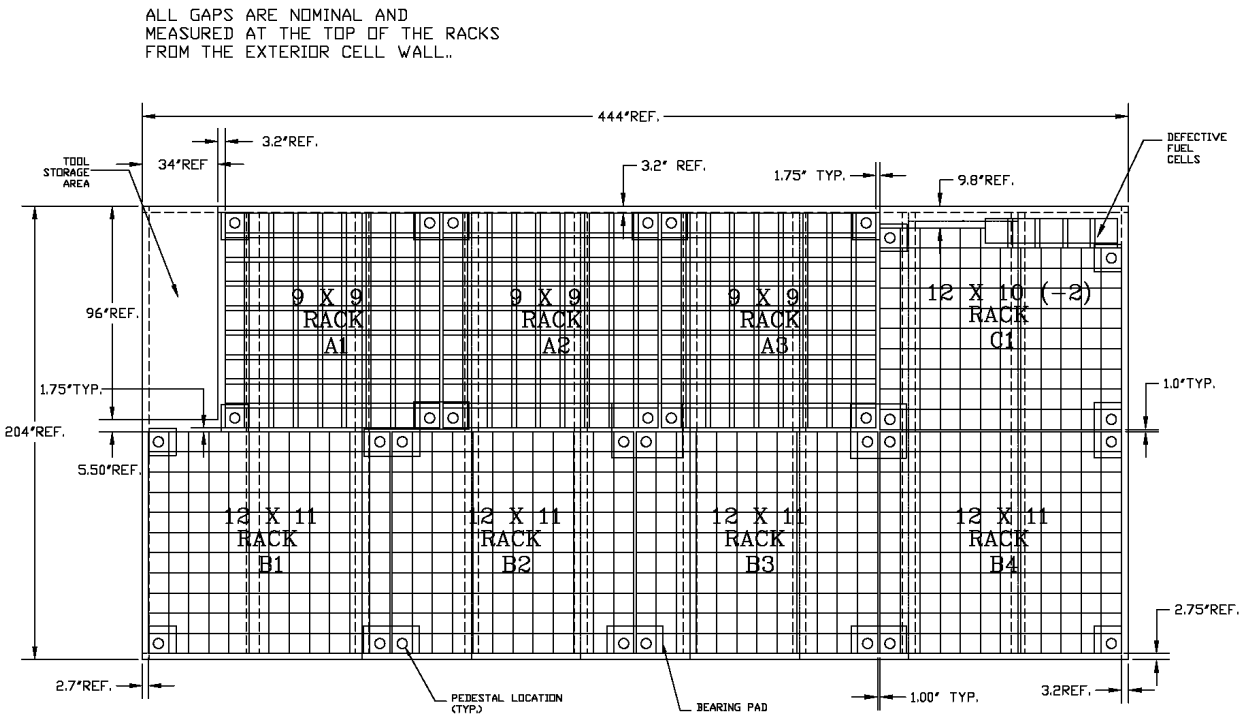

Figure 9.1-4

Spent Fuel Storage Pool Layout (889 Storage Locations)

9.2.2.1 Design Bases

9.2.2.1.1 Safety Design Basis

Failure of the component cooling water system or its components will not affect the ability of safety-related systems to perform their intended safety functions. The component cooling water system serves no safety-related function except for containment isolation and therefore has no nuclear safety design basis except for containment isolation (see subsection 6.2.3).

9.2.2.1.2 Power Generation Basis

The component cooling water system is designed to perform its operational functions in a reliable and failure tolerant manner. This reliability is achieved with the use of reliable and redundant equipment and with a simplified system design.

9.2.2.1.2.1 Normal Operation

The component cooling water system transfers heat from various plant components needed to support normal power operation with a single active component failure. The component cooling water system is designed for normal operation in accordance with the following criteria:

- The component cooling water supply temperature to plant components is not more than 100~~99~~°F assuming a 0 percent exceedance ambient design wet bulb temperature of 86.1~~85.5~~°F for service water cooling at normal operations (maximum normal temperature per Table 2-1 for normal shutdown). NRC 264
- The minimum component cooling water supply temperature to plant components is 60°F.
- The component cooling water system provides sufficient surge capacity to accept 50 gallons per minute leakage into or out of the system for 30 minutes before any operator action is required.

9.2.2.1.2.2 Normal Plant Cooldown

The first phase of plant cooldown is accomplished by transferring heat from the reactor coolant system via the steam generators to the main steam systems.

The component cooling water system, in conjunction with the normal residual heat removal system removes both residual and sensible heat from the core and the reactor coolant system and reduces the temperature of the reactor coolant system during the second phase of cooldown.

The component cooling water system reduces the temperature of the reactor coolant system from 350°F at approximately 4 hours after reactor shutdown to 125°F within 96 hours after shutdown by providing cooling to the normal residual heat removal system heat exchangers. This cooldown time is based on operation of both component cooling water system mechanical trains (one pump and one heat exchanger each), and a service water system supply temperature to the component cooling water system heat exchangers resulting from a~~the~~ maximum normal ambient design wet NRC 264

The following words represent the original Combined License Information Item commitment, which has been addressed as discussed above:

> Combined License applicants referencing the AP1000 certified design will address the site-specific need for cathodic protection in accordance with NACE Standard RP-01-69 for external metal surfaces of metal tanks in contact with the ground.

9.5.4.7.2 The Combined License information requested in this subsection has been partially addressed in APP-GW-GLR-120 (Reference 24), and the applicable changes are incorporated into the DCD. No additional work is required to address the information as delineated in the following paragraph:

NRC 217

> The epoxy-urethane paint color selected for the exterior of the standby diesel fuel oil storage tanks shall be white~~selected~~ to minimize radiant sunlight heat transmission to the tank oil stored fuel volume.

The following activities are to be addressed by the Combined License applicant:

NRC 217

> Address the diesel fuel specifications grade and the fuel properties consistent with manufacturers' recommendations and the measures to protect against fuel degradation ~~by a program of fuel degradation~~ by a program of fuel sampling and testing.

The following words represent the original Combined License Information Item commitment, which has been addressed as discussed above:

> Combined License applicants referencing the AP1000 certified design will address site-specific factors in the fuel oil storage tank installation specification to reduce the effects of sun heat input into the stored fuel, the diesel fuel specifications grade and the fuel properties consistent with manufacturers' recommendations, and will address measures to protect against fuel degradation by a program of fuel sampling and testing.

9.5.5 References

1. NUREG-0800, U. S. Nuclear Regulatory Commission Standard Review Plan, Section 9.5.1, "Fire Protection Program," Revision 3, July 1981, including Branch Technical Position (BTP) CMEB 9.5-1, "Guidelines for Fire Protection for Nuclear Power Plants," Revision 2, July 1981.

2. National Fire Protection Association Codes and Standards:

   NFPA 10, 1998: Standard for Portable Fire Extinguishers; NFPA 13, 1999: Standard for the Installation of Sprinkler Systems; NFPA 14, 2000: Standard for the Installation of Standpipe, Private Hydrants, and Hose Systems; NFPA 15, 2001: Standard for Water Spray Fixed Systems for Fire Protection; NFPA 20, 1999: Standard for the Installation of Stationary Pumps for Fire Protection; NFPA 22, 1998: Standard for Water Tanks for Private Fire Protection; NFPA 24, 1995: Standard for Installation of Private Fire Service Mains and Their Appurtenances; NFPA 30, 2000: Flammable and Combustible Liquids Code; NFPA 50A, 1999: Standard for Gaseous Hydrogen Systems at Consumer Sites; NFPA 50B,

Security-Related Information, Withhold Under 10 CFR 2.390d

NRC 250

Figure 9A-1 (Sheet 4 of 16)

[*Nuclear Island Fire Area Plan at Elevation 96'-6"*]*

*NRC Staff approval is required prior to implementing a change in this information; see DCD Introduction Section 3.5.

Security-Related Information, Withhold Under 10 CFR 2.390d

NRC 250

Figure 12.3-1 (Sheet 5 of 16)

Radiation Zones, Normal Operations/Shutdown
Nuclear Island, Elevation 96′-6″

Security-Related Information, Withhold Under 10 CFR 2.390d

NRC 250

Figure 12.3-2 (Sheet 5 of 15)

Radiation Zones, Post-Accident
Nuclear Island, Elevation 96′-6″

Security-Related Information, Withhold Under 10 CFR 2.390d

NRC 250

Figure 12.3-3 (Sheet 5 of 16)

Radiological Access Controls, Normal Operations/Shutdown
Nuclear Island, Elevation 96′-6″

12.5 Health Physics Facilities Design

12.5.1 Objectives

The health physics (HP) facilities are designed with the objectives of:

- Providing capability for administrative control of the activities of plant personnel to limit personnel exposure to radiation and radioactive materials as low as reasonably achievable (ALARA) and within the guidelines of 10 CFR 20.
- Providing capability for administrative control of effluent releases from the plant to maintain the releases ALARA and within the limits of 10 CFR 20 and the plant Technical Specifications.
- Providing capability for administrative control of waste shipments from the plant to meet applicable requirements for the shipment and receipt of the material at the storage or burial site.

12.5.2 Equipment, Instrumentation, and Facilities

The health physics (HP) facilities are located at elevation 100′-0″ in the annex building. See Figure 1.2-18 for a plan view of elevation 100′-0″ of the annex building.

12.5.2.1 Access and Exit of Radiologically Controlled Areas

Access to the radiologically controlled area (RCA) encompassing the containment and potentially contaminated areas of the annex, auxiliary, and radwaste buildings is normally through the entry/exit area of the health physics section of the annex building. Exit from the RCA is at the same location.

12.5.2.2 Facilities

NRC 245

The ALARA briefing and operations~~al~~ support center is located off the main corridor immediately beyond the main entry to the annex building. Near this room are several offices that may be used for other health physics functions.

Changes rooms are provided where radiation workers remove street clothes and put on modesty garments. These rooms are provided with lockers, wash sinks, showers and toilet facilities.

Radiation workers don anti-contamination clothing in the protective clothing pickup and suitup room. Workers then proceed to the central health physics booth.

Personnel access to and from the RCA is controlled at the health physics booth at the entry/exit points of the health physics area. Logging into the Radiation Permit System and issuance of dosimetry is also handled at this location. The health physics booth is equipped with computer terminals, desks, filing cabinets, and shelves, and other facilities needed for effective control and monitoring of radiation workers in the RCA. Workers are logged into a radiation exposure

CHAPTER 13

CONDUCT OF OPERATIONS

This chapter provides information relating to the preparations and plans for operation of the AP1000. Its purpose is to provide reasonable assurance that the plant will establish and maintain a staff of sufficient size and technical competence and that operating plans provide reasonable assurance of adequate protection of the public health and safety.

13.1 Organizational Structure of Applicant

The organizational structure must be consistent with the human system interface design assumptions. See Section 1.8 and Chapter 18 for interface requirements pertaining to organizational structure.

13.1.1 Combined License Information Item

Combined License applicants referencing the AP1000 certified design will address adequacy of the organizational structure.

13.2 Training

Chapter 18, Section 18.10 references WCAP 14655, "Designer's Input for the Training of the Human Factors Engineering Verification and Validation Personnel." This document describes input from the designer on the training of the operations personnel who participate as subjects in the human factors engineering (HFE) verification and validation. The WCAP also describes how training insights are passed from the designer.

13.2.1 Combined License Information Item

Combined License applicants referencing the AP1000 certified design will develop and implement training programs for plant personnel. This includes the training program for the operations personnel who participate as subjects in the human factors engineering verification and validation. These Combined License applicant training programs will address the scope of licensing examinations as well as new training requirements.

13.3 Emergency Planning

NRC 245 See subsection 1.2.5 for the locations of the technical support center, the operations~~al~~ support center and the decontamination facilities. See Section 9.4 for a description of the HVAC systems for the main control room/control support area and the annex building. See Section 18.8 for the high level requirements for the technical support center and the operations~~al~~ support center. See Section 7.5 for identification of plant variables that are provided for interface to the emergency planning areas.

NRC 245

Communication interfaces among the main control room, the technical support center and the emergency planning centers are discussed in subsection 13.3.1.

- Maintenance, inspection, test and surveillance
- Administrative
- Operation of post-72 hour equipment

13.6 Security

The Security Plan consists of the "AP1000 Physical Security Plan," Training and Qualification Plan, and Safeguards Contingency Plan. The Security Plan will be submitted to the Nuclear Regulatory Commission as a separate licensing document in order to fulfill the requirements for 10 CFR 52.79(35) and 10 CFR 52.79(36). The Security Plan will meet the requirements of 10 CFR 52.98(c). The plan is classified as Security Safeguards Information and is withheld from public disclosure pursuant to 10 CFR 73.21. Additionally, the "AP1000 Interim Compensatory Measures Report" (Reference 2), the "AP1000 Enhancement Report" (Reference 3), and the "AP1000 Safeguards Assessment Report" (Reference 4) are submitted to the Nuclear Regulatory Commission as separate licensing documents to establish the design of the AP1000 Security Systems. Each document is classified as Security Safeguards information and is withheld from public disclosure pursuant to 10 CFR 73.21.

13.6.1 Combined License Information Item

Combined license applicants referencing the AP1000 certified design will address site-specific information related to the security, contingency, and guards training plans. The combined license applicant will develop the Physical Security Plan, Training and Qualification Plan, and the Safeguards Contingency Plan.

NRC 268 The combined license holder will develop and implement a Cyber Security Program.

13.7 References

1. Not Used.

2. APP-GW-GLR-067, "AP1000 Interim Compensatory Measures Report," Westinghouse Electric Company LLC.

3. APP-GW-GLR-062, "AP1000 Enhancement Report," Westinghouse Electric Company LLC.

4. APP-GW-GLR-066, "AP1000 Safeguards Report," Westinghouse Electric Company LLC.

5. Not Used.

6. Not Used.

7. WCAP-13864, "Rod Control System Evaluation Program," Revision 1-A, November 1994.

8. USNRC Generic Letter GL-96-01, "Testing of Safety-Related Logic Circuits," January 10, 1996.

9. Not Used.

Table 14.3-2 (Sheet 3 of 17)

DESIGN BASIS ACCIDENT ANALYSIS

Reference	Design Feature	Value
Table 5.4-17	Pressurizer Safety Valves - Design Parameters: - Number - Minimum required relieving capacity per valve (lbm/hr) - Set pressure (psig)	 2 ≥ 750,000 2485 ± 25
NRC 250 Section 6.1.1.4	The exposed surfaces of the excore detectors are made of stainless steel or titanium.	
Table 6.1-2	The exterior of the containment vessel (above plant elevation 135′ 3″) and the interior of the containment vessel (above 7′ above the operating deck) is coated with an inorganic zinc coating.	
Section 6.1.2.1.5	The nonsafety-related coatings used inside containment on walls, floors, ceilings, structural steel which is part of the building structure, and on the polar crane have a minimum dry film density (lb/ft^3).	≥ 100
Figure 6.2.2-1	The passive containment cooling system consists of a water storage tank, cooling water flow discharge path to the containment shell, a water distribution system for the containment shell, and a cooling air flow path.	
Figure 6.2.2-1	The minimum duration the PCS cooling water flow is provided from the PCCWST (hours).	≥ 72
Table 6.2.2-1	The water coverage of the containment shell exceeds the amount used in the safety analysis.	
Table 6.2.2-1	The minimum drain flow rate capacity of the upper annulus drain (gpm).	≥ 525
Table 6.2.2-1	The minimum makeup flow rate capability from an external source to the PCS water storage tank (gpm).	≥ 100
Table 6.2.2-1	The minimum makeup flow rate capability from the PCS water storage tank to the spent fuel pit (gpm).	≥ 118
Table 6.2.2-1	The minimum PCS water storage tank volume for makeup to the spent fuel pit (non-coincident with PCS operation) (gallons).	≥ 756,700
Table 6.2.2-1	The minimum long term makeup capability from the PCCAWST to the PCCWST (days).	≥ 4
Table 6.2.2-1	The minimum long term makeup flow capability from the PCCAWST to the PCCWST (gpm).	≥ 100

The following words represent the original Combined License Information Item commitment:

> The Combined License applicant is responsible for a startup administration manual (procedure), which contains the administration procedures and requirements that govern the activities associated with the plant initial test program, as identified in subsection 14.2.3.

14.4.4 Review and Evaluation of Test Results

The Combined License holder is responsible for review and evaluation of individual test results as well as final review of overall test results and for review of selected milestones or hold points within the test phases. Test exceptions or results which do not meet acceptance criteria are identified to the affected and responsible design organizations, and corrective actions and retests, as required, are performed.

14.4.5 Interface Requirements

The Combined License applicant is responsible for testing that may be required of structures and systems which are outside the scope of this design certification. Test Specifications and acceptance criteria are provided by the responsible design organizations as identified in subsection 14.2.3. The interfacing systems to be considered for testing are taken from Table 1.8-1 and include as a minimum, the following:

- storm drains
- site specific seismic sensors
- offsite ac power systems
- circulating water heat sink
- raw and sanitary water systems
- individual equipment associated with the fire brigade
- portable personnel monitors and radiation survey instruments
- equipment associated with the physical security plan

14.4.6 First-Plant-Only and Three-Plant-Only Tests

[*The COL holder for the first plant and the first three plants will perform the tests listed in subsection 14.2.5. For subsequent plants, either tests listed in subsection 14.2.5 shall be performed, or the COL applicant shall provide a justification that the results of the first-plant-only tests or first-three-plant tests are applicable to the subsequent plant.*]*

NRC 254

The Combined License holder(s) for the first AP1000 plant (or first three plants) available for testing will perform the tests defined during preoperational and startup testing as identified in subsections 14.2.9 and 14.2.10. Combined License holders referencing the results of the tests will provide the report as necessary. The schedule for providing this information will be provided prior to preoperational testing ~~will perform the tests or provide the information defined above prior to fuel load~~.

* NRC Staff approval is required prior to implementing a change in this information; see DCD Introduction Section 3.5.

side is released to the environment. These releases are terminated when the steam releases stop.

- The activity from the reactor coolant system and the core is released to the containment atmosphere and is available for leakage to the environment through the assumed design basis containment leakage.

Credit is taken for decay of radionuclides until release to the environment. After release to the environment, no consideration is given to radioactive decay or to cloud depletion by ground deposition during transport offsite.

15.4.8.3.3 Dose Calculation Models

The models used to calculate doses are provided in Appendix 15A.

15.4.8.3.4 Analytical Assumptions and Parameters

The assumptions and parameters used in the analysis are listed in Table 15.4-4.

15.4.8.3.5 Identification of Conservatisms

The assumptions used in the analysis contain a number of conservatisms:

- Although fuel damage is assumed to occur as a result of the accident, no fuel damage is anticipated.
- The reactor coolant activities are based on an assumed fuel defect level of 0.25 percent; whereas, the expected fuel defect level is far less than this (see Section 11.1).
- The leakage of reactor coolant into the secondary system, at 300 gallons per day, is conservative. The leakage is normally a small fraction of this.
- It is unlikely that the conservatively selected meteorological conditions are present at the time of the accident.
- The leakage from containment is assumed to continue for a full 30 days. It is expected that containment pressure is reduced to the point that leakage is negligible before this time.

15.4.8.3.6 Doses

Using the assumptions from Table 15.4-4, the calculated total effective dose equivalent (TEDE) doses are determined to be less than 3.6 rem at the site boundary for the limiting 2-hour interval (0 to 2 hours) and less than 5.5~~6.9~~ rem at the low population zone outer boundary. These doses are well within the dose guideline of 25 rem total effective dose equivalent identified in 10 CFR Part 50.34. The phrase “well within” is taken as being 25 percent or less. NRC 237

At the time the rod ejection accident occurs, the potential exists for a coincident loss of spent fuel pool cooling with the result that the pool could reach boiling and a portion of the radioactive

15.6.5.3.5 Main Control Room Dose Model

There are two approaches that may be used for modeling the activity entering the main control room. If power is available, the normal heating, ventilation, and air-conditioning (HVAC) system will switch over to a supplemental filtration mode (Section 9.4). The normal HVAC system is not a safety-class system but provides defense in depth.

Alternatively, if the normal HVAC is inoperable or, if operable, the supplemental filtration train does not function properly resulting in increasing levels of airborne iodine in the main control room, the emergency habitability system (Section 6.4) would be actuated when high iodine activity is detected. The emergency habitability system provides passive pressurization of the main control room from a bottled air supply to prevent inleakage of contaminated air to the main control room. There is a 72-hour supply of air in the emergency habitability system. After this time, the main control room is assumed to be opened and unfiltered air is drawn into the main control room by way of an ancillary fan. After 7 days, offsite support is assumed to be available to reestablish operability of the control room habitability system by replenishing the compressed air supply. As a defense-in-depth measure, the nonsafety-related normal control room HVAC would be brought back into operation with the supplemental filtration train if power is available.

The main control room is accessed by a vestibule entrance, which restricts the volume of contaminated air that can enter the main control room from ingress and egress. The design of the emergency habitability system (VES) provides 65 cfm ±5 cfm to the control room and maintains it in a pressurized state. The path for the purge flow out of the main control room is through the vestibule entrance and this results in a dilution of the activity in the vestibule and a reduction in the amount of activity that might enter the main control room. Without this purge through the vestibule, the projected unfiltered inleakage into the main control room is 5 cfm. ~~However, t~~The impact of the purge flow is to reduce the effective unfiltered inleakage rate to 2.654 cfm. ~~Additionally, during the first 24 hours following the LOCA, personnel entering the control room will be required to wait inside the vestibule for a short period of time until the activity concentration is reduced by a factor of five or more. This reduces the effective unfiltered inleakage rate to 0.531 cfm. Conservatively, assuming a purge flow of only 55 cfm through the vestibule, the factor of five reduction in activity concentration would be achieved in less than 11 minutes.~~

NRC 233

NRC 233

Activity entering the main control room is assumed to be uniformly dispersed. No credit is taken for the removal of airborne activity in the main control room although elemental iodine and particulates would be removed by deposition and sedimentation.

The main control room dose calculation models are provided in Appendix 15A for the determination of doses resulting from activity which enters the main control room envelope.

15.6.5.3.6 Analytical Assumptions and Parameters

The analytical assumptions and parameters used in the radiological consequences analysis are listed in Table 15.6.5-2.

Table 15.6.5-2 (Sheet 2 of 3)

ASSUMPTIONS AND PARAMETERS USED IN CALCULATING RADIOLOGICAL CONSEQUENCES OF A LOSS-OF-COOLANT ACCIDENT

Main control room model (cont.)	
– Atmospheric dispersion factors (sec/m^3)	See Table 15A-6
– Occupancy	
• 0 - 24 hr	1.0
• 24 - 96 hr	0.6
• 96 - 720 hr	0.4
– Breathing rate (m^3/sec)	3.5 E-04
Control room with emergency habitability system credited	
– Main control room activity level at which the emergency habitability system is actuated (Ci/m^3 of dose equivalent I-131)	2.0 E-6
– Time to switch from normal HVAC to emergency habitability system operation after actuation signal generation (sec)	30
– Interval with operation of the emergency habitability system	
• Flow from compressed air bottles of the emergency habitability system (cfm)	60
• Effective unfiltered inleakage via ingress/egress (cfm)	2.654~~5.0~~
NRC 233 ~~• 0 - 24 hr~~	~~0.531~~
~~• > 24 hr~~	~~2.654~~
• Recirculation flow (cfm)	Not applicable
– Time at which the compressed air supply of the emergency habitability system is depleted (hr)	72
– After depletion of emergency habitability system bottled air supply (>72 hr)	
• Air intake flow (cfm)	1700
• Intake flow filter efficiency (%)	Not applicable
• Recirculation flow (cfm)	Not applicable
– Time at which the compressed air supply is restored and emergency habitability system returns to operation (hr)	168
Control room with credit for continued operation of HVAC	
– Time delay to switch from normal operation to the supplemental air filtration mode (sec)	30
– Filtered air intake flow (cfm)	860
– Filtered air recirculation flow (cfm)	2740
– Filter efficiency (%)	
• Elemental iodine	90
• Organic iodine	90
• Particulates	99

Table 15.6.5-3

RADIOLOGICAL CONSEQUENCES OF A LOSS-OF-COOLANT ACCIDENT WITH CORE MELT

	TEDE Dose (rem)
Exclusion zone boundary dose (1.2 - 3.2 hr)[1]	11.5
Low population zone boundary dose (0 - 30 days)	14.2
Main control room dose (emergency habitability system in operation)	
– Airborne activity entering the main control room	3.30~~2.8~~ rem
– Direct radiation from adjacent structures	0.15 rem
– Sky-shine	0.01 rem
– Total	3.46~~2.96~~ rem
Main control room dose (normal HVAC operating in the supplemental filtration mode)[2]	
– Airborne activity entering the main control room	3~~2~~.91 rem
– Direct radiation from adjacent structures	0.15 rem
– Sky-shine	0.01 rem
– Total	4.07 rem

NRC 233

NRC 233

NRC 233

Note:

1. This is the 2-hour period having the highest dose.
2. Although the dose is reported for the case in which the normal HVAC operates in the supplemental filtration mode, for the design basis accident it is projected that the system would not maintain the activity in the main control room air low enough to avoid actuation of the emergency habitability system. A “realistic” event could be addressed without actuation of the emergency habitability system.

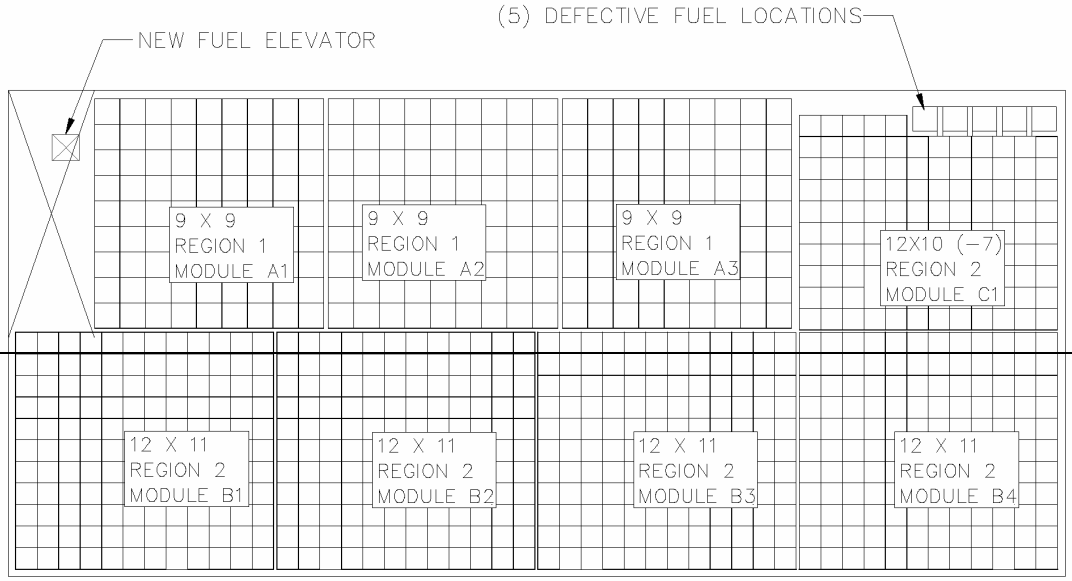

REGION 1 (A1,A2,A3) – 243 LOCATIONS
REGION 2 (B1,B2,B3,B4,C1) – 641 LOCATIONS
DEFECTIVE FUEL CELLS (DFCS) – 5 LOCATIONS
TOTAL STORAGE LOCATIONS – 889

NRC 256

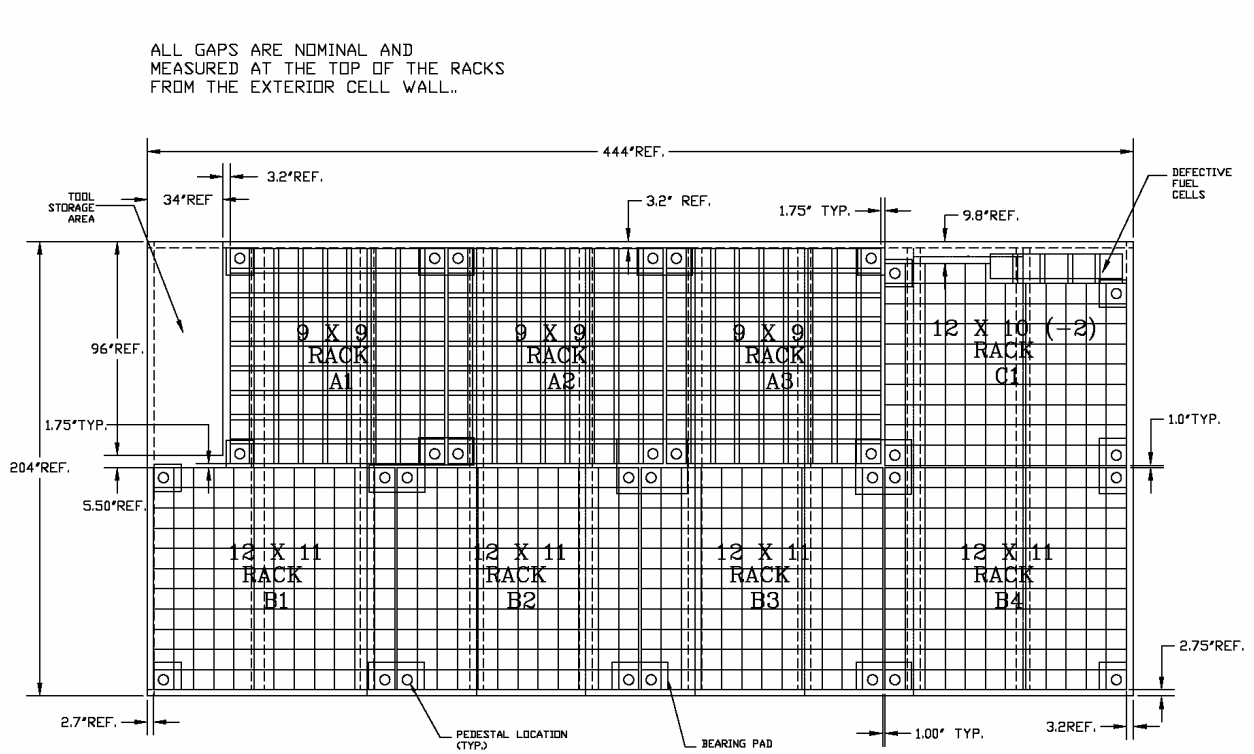

Region 1 (A1, A2, A3) – 243 locations

Region 2 (B1, B2, B3, B4, C1) – 641 locations

Defective Fuel Cells (DFCs) – 5 locations

Total Storage Locations – 889

Figure 4.3-1

Discrete Two Region Spent Fuel Pool Rack Layout

NRC 100

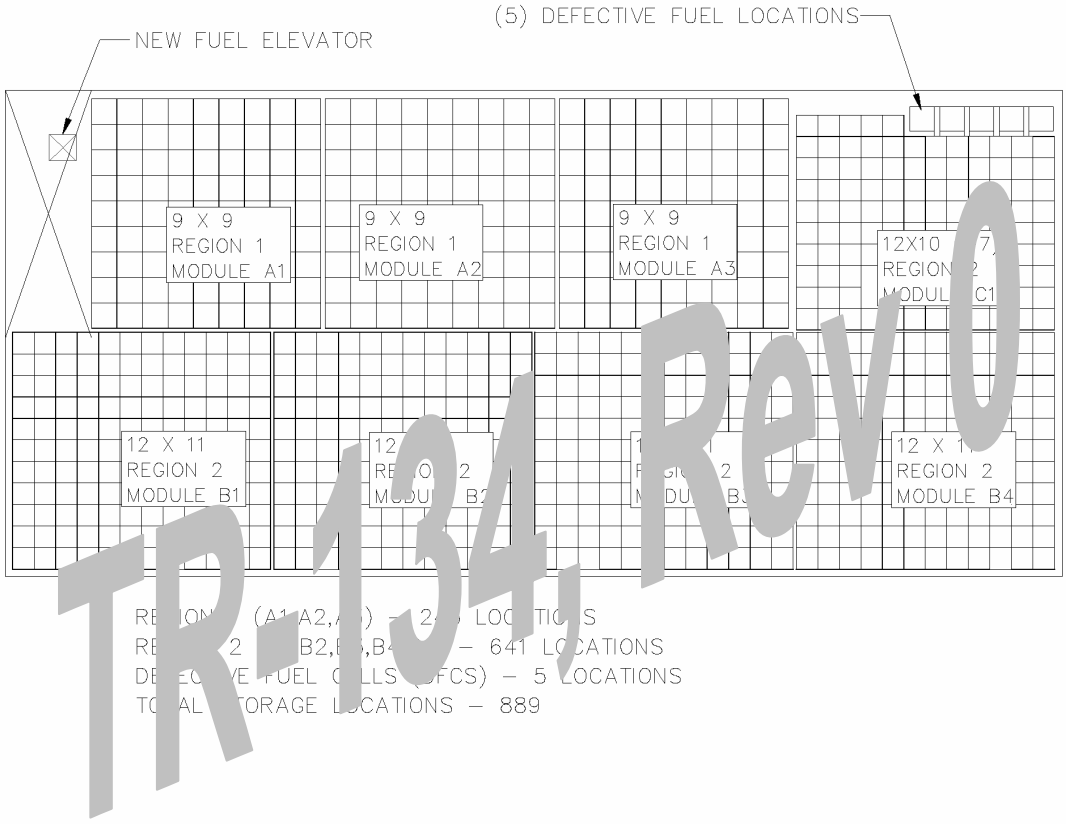

Figure 4.3-1

Discrete Two Region Spent Fuel Pool Rack Layout

BASES

SURVEILLANCE REQUIREMENTS (continued)

The ANSI/ASME standard requires that all valves be tested every 5 years and a minimum of 20% of the valves be tested every 24 months. The ASME Code specifies the activities and frequencies necessary to satisfy the requirements. Table 3.7.1-2 allows a ±3% setpoint tolerance

for OPERABILITY; however, the valves are reset to ±1% during the Surveillance to allow for drift. The lift settings, according to Table 3.7.1-2, correspond to ambient conditions of the valve at nominal operating temperature and pressure.

This SR is modified by a Note that allows entry into and operation in MODE 3 prior to performing the SR. The MSSVs may be either bench tested or tested in situ at hot conditions using an assist device to simulate lift pressure. If the MSSVs are not tested at hot conditions, the lift setting pressure shall be corrected to ambient conditions of the valve at operating temperature and pressure.

REFERENCES

1. Chapter 10, “Steam and Power Conversion Systems Description.”

2. ASME Boiler and Pressure Vessel Code, Section III, Article NC-7000, “Overpressure Protection,” Class 2 Components.

3. Section 15.2, “Decreased Heat Removal by Secondary System.”

4. ASME Boiler and Pressure Vessel Code, Section XI, Article IV-3500, “Inservice Test: Category C Valves.”

5. ASME OM Code-1995 and Addenda through the 1996 Addenda, “Code for Operation and Maintenance of Nuclear Power Plants~~Requirements for Inservice Performance Testing of Nuclear Power Plant Pressure Relief Devices in Light Water Reactor Power Plants~~.”

NRC 243

6. NRC Information Notice 94-60, “Potential Overpressurization of the Main Steam System,” August 22, 1994.

B 3.9 REFUELING OPERATIONS

B 3.9.7 Decay Time

BASES

BACKGROUND

The movement of irradiated fuel assemblies within containment or in the fuel handling area inside the auxiliary building requires allowing at least 48 hours for radioactive decay time before fuel assembly handling can be initiated. During fuel handling, this ensures that sufficient radioactive decay has occurred in the event of a fuel handling accident (Refs. 1 and 2). Sufficient radioactive decay of short-lived fission products would have occurred to limit offsite doses from the accident to within the values reported in Chapter 15.

APPLICABLE SAFETY ANALYSES

During movement of irradiated fuel assemblies, the radioactivity decay time is an initial condition design parameter in the analysis of a fuel-handling accident inside containment or in the fuel handling area inside the auxiliary building, as postulated by Regulatory Guide 1.183 (Ref. 1).

The fuel handling accident analysis inside containment or in the fuel handling area inside the auxiliary building is described in Reference 2. This analysis assumes a minimum radioactive decay time of 48~~100~~ hours.

NRC 236

Radioactive decay time satisfies Criterion 2 of 10 CFR 50.36(c)(2)(ii).

LCO

A minimum radioactive decay time of 48 hours is required to ensure that the radiological consequences of a postulated fuel handling accident inside containment or in the fuel handling area inside the auxiliary building are within the values calculated in Reference 2.

APPLICABILITY

Radioactive decay time is applicable when moving irradiated fuel assemblies in containment or in the fuel handling area inside the auxiliary building. The LCO minimizes the possibility of radioactive release due to a fuel handling accident that is beyond the assumptions of the safety analysis. If irradiated fuel assemblies are not being moved, there can be no significant radioactivity release as a result of a postulated fuel handling accident. Requirements for fuel handling accidents in the spent fuel pool are also covered by LCO 3.7.11, “Fuel Storage Pool Water Level.”

16.3 Investment Protection

16.3.1 Investment Protection Short-Term Availability Controls

The importance of nonsafety-related systems, structures and components in the AP1000 has been evaluated. The evaluation uses PRA insights to identify systems, structures and components that are important in protecting the utilities investment and for preventing and mitigating severe accidents. To provide reasonable assurance that these systems, structures and components are operable during anticipated events short-term availability controls are provided. These investment protection systems, structures and components are also included in the D-RAP/OPRAAs~~MR Program~~ (refer to subsection 17.4), which provides confidence that availability and reliability are designed into the plant and that availability and reliability are maintained throughout plant life through the maintenance rule. Technical Specifications are not required for these systems, structures and components because they do not meet the selection criteria applied to the AP1000 (refer to subsection 16.1.1).

NRC 251

Table 16.3-1 lists nonsafety-related systems, structures and components that have investment protection short-term availability controls. This table also lists the number of trains that should be operable and the plant operating MODES when they should be operable. Table 16.3-2 contains the investment protection short-term availability controls. These short-term availability controls define:

- Equipment that should be operable
- Operational MODES when the equipment should be operable
- Testing and inspections that should be used to demonstrate the equipment's operability
- Operational MODES that should be used for planned maintenance operations
- Remedial actions that should be taken if the equipment is not operable

Tables 16.3-1 and 16.3-2 contain defined terms that appear in capitalized type. These terms are defined below.

ACTIONS—shall be that part of a Specification that prescribes Required Actions to be taken under designated Conditions within specified Completion Times.

CHANNEL CALIBRATION—shall be the adjustment, as necessary, of the channel so that it responds within the required range and accuracy to known input. The CHANNEL CALIBRATION shall encompass the entire channel, including the required sensor, alarm, interlock, display, and trip functions. Calibration of instrument channels with resistance temperature detector (RTD) or thermocouple sensors may consist of an in-place qualitative assessment of sensor behavior and normal calibration of the remaining adjustable devices in the channel. Whenever a sensing element is replaced, the next required CHANNEL CALIBRATION shall include an in-place cross calibration that compares the other sensing elements with the recently installed sensing element. The CHANNEL CALIBRATION may be performed by means of any series of sequential, overlapping calibrations or total channel steps so that the entire channel is calibrated.

CHAPTER 17

QUALITY ASSURANCE

17.1 Quality Assurance During the Design and Construction Phases

See Section 17.5.

17.2 Quality Assurance During the Operations Phase

See Section 17.5.

17.3 Quality Assurance During Design, Procurement, Fabrication, Inspection, and/or Testing of Nuclear Power Plant Items

This section outlines the quality assurance program applicable to the design, procurement, fabrication, inspection, and/or testing of items and services for the AP1000 Project. The design for AP1000 is based upon employing the design of AP600 to the maximum extent possible. As a result, a continuous quality program spanning AP600 design as well as AP1000 design has been used. Westinghouse has and will continue to maintain a quality assurance program meeting the requirements of 10 CFR 50 Appendix B for the AP1000 program that will be applicable to the design, procurement, fabrication, inspection, and/or testing activities.

Effective March 31, 1996, activities affecting the quality of items and services for the AP600 Project during design, procurement, fabrication, inspection, and/or testing were being performed in accordance with the quality plan described in "Westinghouse Electric Corporation – Energy Systems Business Unit, Quality Management System," (Reference 1). The Quality Management System (QMS) has been maintained as the Quality Plan for the AP1000 program and subsequent revisions have been submitted to and accepted by the NRC as meeting the requirements of 10 CFR 50 Appendix B.

Prior to introduction of the QMS as the quality plan applicable to the AP1000 project, activities on the AP600/AP1000 program were performed in accordance with topical report WCAP 8370 (References 2 and 3), Westinghouse Energy Systems Business Unit/Power Generation Business Unit Quality Assurance Plan. WCAP 8370 was subsequently superceded by the Westinghouse QMS to describe the quality assurance plan and Westinghouse commitments to meet the requirements of 10 CFR 50 Appendix B.

The current Westinghouse quality plan for work being performed on the AP1000 is the Westinghouse Electric Company Quality Management System (QMS) (Reference 9). The referenced revision of the QMS was accepted by the NRC as meeting the requirements of 10 CFR 50, Appendix B, on September 13, 2002.

A project-specific quality plan was issued to supplement the quality management system document and the topical reports for design activities affecting the quality of structures, systems, and components for the AP600 project (Reference 4). This plan referenced the NQA-1-1989 edition through NQA-1b-1991 addenda and was applicable to work performed for the AP1000 design prior to March 16, 2007.

NRC 271

Effective March 16, 2007, NQA-1-1994 is the applicable revision of NQA-1 for work performed for the AP1000 project. As such, a project-specific quality plan is no longer required, and the Westinghouse Electric Company Quality Management System (QMS) (Reference 9) is the quality program for work performed for the AP1000 project.

Quality Assurance requirements for systems, structures, and components will be graded based on the safety classification as indicated in Section 3.2. Safety-related systems are classified as Equipment Classes A, B and C, and will meet the requirements of 10 CFR 50, Appendix B. For systems, structures, and components included in the regulatory treatment of nonsafety systems (RTNSS), the quality requirements are identified in Table 17-1. See Section 16.3 for systems that should be considered for designation of systems and components included in the regulatory treatment of nonsafety systems.

While Westinghouse retains the overall responsibility for the AP1000 design, portions of the design are developed by external organizations. Each organization maintains a quality assurance program that meets the NQA-1 criteria that apply to its work scope. In accordance with the QMS, Westinghouse performs an initial evaluation of these programs and monitors their continued effective implementation through audits, surveillance, and evaluation of the performance of external organizations.

17.4 Design Reliability Assurance Program

This subsection presents the AP1000 Design Reliability Assurance Program (D-RAP).

17.4.1 Introduction

The AP1000 D-RAP is implemented as an integral part of the AP1000 design process to provide confidence that reliability is designed into the plant and that the important reliability assumptions made as part of the AP1000 probabilistic risk assessment (PRA) (Reference 5) will remain valid throughout plant life. The PRA quantifies plant response to a spectrum of initiating events to demonstrate the low probability of core damage and resultant risk to the public. PRA input includes specific values for the reliability of the various structures, systems, and components (SSCs) in the plant that are used to respond to postulated initiating events.

NRC 251

The D-RAP, shown in Figure 17.4-1, is implemented during Design Certification. The D-RAP identifies risk-significant SSCs for inclusion into the site Operational Phase Reliability Assurance Activities (OPRAAs)~~Maintenance Rule (MR) Program (Reference 10)~~ using probabilistic, deterministic, and other methods.

NRC 251

The OPRAAs~~MR Program~~ provides confidence that the operations and maintenance activities performed by the operating plant support should maintain the reliability assumptions made in the plant PRA.

17.4.2 Scope

The D-RAP includes a design evaluation of the AP1000 and identifies the aspects of plant operation, maintenance, and performance monitoring pertinent to risk-significant SSCs. In

addition to the PRA, deterministic tools, industry sources, and expert opinion are used to identify and prioritize those risk-significant SSCs.

17.4.3 Design Considerations

As part of the design process, risk-significant components are evaluated to determine their dominant failure modes and the effects associated with those failure modes. For most components, a substantial operating history is available which defines the significant failure modes and their likely causes.

The identification and prioritization of the various possible failure modes for each component lead to suggestions for failure prevention or mitigation. This information is provided as input to the OPRAAs~~MR Program~~.

NRC 251

The design reflects the reliability values assumed in the design and PRA as part of procurement specifications. When an alternative design is proposed to improve performance in either area, the revised design is first reviewed to provide confidence that the current assumptions in the other areas are not violated. When a potential conflict exists between safety goals and other goals, safety goals take precedence.

17.4.4 Relationship to Other Administrative Programs

The D-RAP manifests itself in other administrative and operational programs. The technical specifications provide surveillance and testing frequencies for certain risk-significant SSCs, providing confidence that the reliability values assumed for them in the PRA will be maintained during plant operations. Risk-significant systems that provide defense-in-depth or result in significant improvement in the PRA evaluations are included in the scope of the D-RAP.

The OPRAAs are comprised of site administrative, maintenance, operational, and testing programs to enhance operational phase reliability throughout the designed plant life. As documented in Reference 10 and Reference 12, the following reliability assurance programs are credited as OPRAAs:

NRC 251

- Maintenance Rule Program (Reference 10)
- Quality Assurance Program (Subsection 17.2)
- Inservice Testing Program (Subsection 3.9)
- Inservice Inspection Program (Subsection 5.2 and Subsection 6.6)
- Technical Specifications Surveillance Test Program (Subsection 16.1)
- AP1000 Investment Protection Short Term Availability Controls Program (Subsection 16.3)
- Site Maintenance Program

17.4.5 The AP1000 Design Organization

The AP1000 organization of Section 1.4 formulates and implements the AP1000 D-RAP.

The AP1000 management staff is responsible for the AP1000 design and licensing.

- Generate design and operational information to be used for ongoing plant reliability assurance activities

NRC 251

Development of maintenance assessments and recommendations ~~for the D-RAP (Phase II)~~ and the site-specific portion of the program is the responsibility of the Combined License applicant~~discussed under the MR program~~.

17.4.7 D-RAP

The definition portion of the D-RAP includes the initial identification of SSCs to be included in the program, implementation of the aspects applicable to design efforts, and definition of the scope, requirements, and implementation options to be included in the later phases.

17.4.7.1 SSCs Identification and Prioritization

The initial task of the D-RAP is identification of risk-significant SSCs to be included within the scope of the program. As shown in Figure 17.4-1, the AP1000 PRA is used to identify those SSCs, consistent with the criteria of Reference 7 for risk achievement worth (RAW), risk reduction worth (RRW), and Fussel-Vesely Worth (FVW). Note that, although Reference 7 was developed for AP600, it is directly applicable to AP1000. The review of light water reactor industry experience and industry notices (such as licensee event reports) supports the process. An expert panel is also employed in the selection process.

PRA-based measurements provide information that contributes to the identification and prioritization of SSCs. A component's RAW is the factor by which the plant's core damage frequency increases if the component reliability is assigned the value 0.0. Components with risk achievement worth values of 2 or greater are considered for inclusion in the D-RAP.

RRW is used in the selection process. A component's risk reduction worth is the amount by which the plant's core damage frequency decreases if the component's reliability is assigned the value 1.0. A threshold measure of 1.005 or greater is used as the cutoff. Components with RRW of 1.005 or greater are considered for inclusion in the D-RAP.

FVW is also used in the screening process. This is a measure of an event's contribution to the overall plant core damage frequency. Components with Fussel-Vesely worth of 0.5 percent or greater are considered for inclusion in the D-RAP.

Deterministic considerations are also instrumental in identifying risk-significant SSCs. The deterministic identification of risk-significant SSCs encompasses the following guidelines and considerations:

- ATWS rule (10 CFR 50.62)
- Loss of all ac power (10 CFR 50.63)
- Post-72-hour actions
- Containment performance
- Adverse interactions with the AP1000 safety-related systems
- Seismic considerations

17.4.8 Glossary of Terms

D-RAP	Design Reliability Assurance Program – performed as part of the AP1000 design effort to assure that the reliability assumptions of the PRA remain valid throughout the plant operating lifetime.
FVW	Fussel-Vesely Worth
MR	Maintenance Rule
NRC 251 OPRAAs	Operational Phase Reliability Assurance Activities
PRA	Probabilistic Risk Assessment
RAW	Risk Achievement Worth
Risk-significant	Any SSC determined in the PRA or by risk-significance analysis (e.g., Level 2 PRA and shutdown risk analysis) to be a major contributor to overall plant risk
RRW	Risk Reduction Worth
RTNSS	Regulatory Treatment of Nonsafety Systems
SSC	Structures, Systems, and Components

17.5 Combined License Information Items

17.5.1 The Combined License applicant or holder will address its design phase Quality Assurance program.

17.5.2 The Combined License applicant will address its Quality Assurance program for procurement, fabrication, installation, construction and testing of structures, systems and components in the facility. The quality assurance program will include provisions for seismic Category II structures, systems, and components.

17.5.3 The Combined License information requested in this subsection has been fully addressed in APP-GW-GLR-117 (Reference 11), and the applicable changes are incorporated in the DCD. No additional work is required by the Combined License applicant to address the aspects of the Combined License information requested in this subsection.

The following words represent the original Combined License Information Item commitment, which has been addressed as discussed above:

> The COL applicant or holder will establish PRA importance measures, the expert panel process, and other deterministic methods to determine the site-specific list of SSCs under the scope of RAP.

– Maintenance plan – This plan describes the nature and frequency of maintenance activities to be performed on plant equipment. The plan includes the selected SSCs identified in the D-RAP.

NRC 251

17.5.8 The Combined License applicant is responsible for integrating the objectives of the OPRAAs~~MR Program~~ into the Quality Assurance Program developed to implement 10 CFR 50, Appendix B. This program will address failures of non-safety-related, risk-significant SSCs that result from design and operational errors in accordance with SECY-95-132, Item E

17.6 References

1. "Energy Systems Business Unit – Quality Management System," Revision 2.

2. WCAP-8370, Revision 12a, "Energy Systems Business Unit - Power Generation Business Unit Quality Assurance Plan."

3. WCAP-8370/7800, Revision 11A/7A, "Energy Systems Business Unit - Nuclear Fuel Business Unit Quality Assurance Plan."

4. WCAP-12600, Revision 4, "AP600 Advanced Light Water Reactor Design Quality Assurance Program Plan," January 1998.

5. APP-GW-GL-022, Revision 0, AP1000 Probabilistic Risk Assessment.

6. Deleted.

7. NRC/DCP0669, "Criteria for Establishing Risk Significant Structures, Systems, and Components (SSCs) to be Considered for the AP600 Reliability Assurance Program," January 16, 1997.

8. Lofgren, E. V., Cooper, et al., "A Process for Risk-Focused Maintenance," NUREG/CR-5695, March 1991.

9. Westinghouse Electric Company Quality Management System (QMS), Revision 5, dated October 1, 2002.

10. NEI 07-02, “Generic FSAR Template Guidance for Maintenance Rule Program Description for Plants Licensed Under 10 CFR Part 52.”

NRC 251

11. APP-GW-GLR-117, Revision 1, “Incorporation of the Maintenance Rule,” Westinghouse Electric Company LLC.

NRC 251

12. SECY 95-132, “Policy and Technical Issue With the Regulatory Treatment of Non-Safety Systems (RTNSS) in Passive Plant Designs (SECY 94-084).”

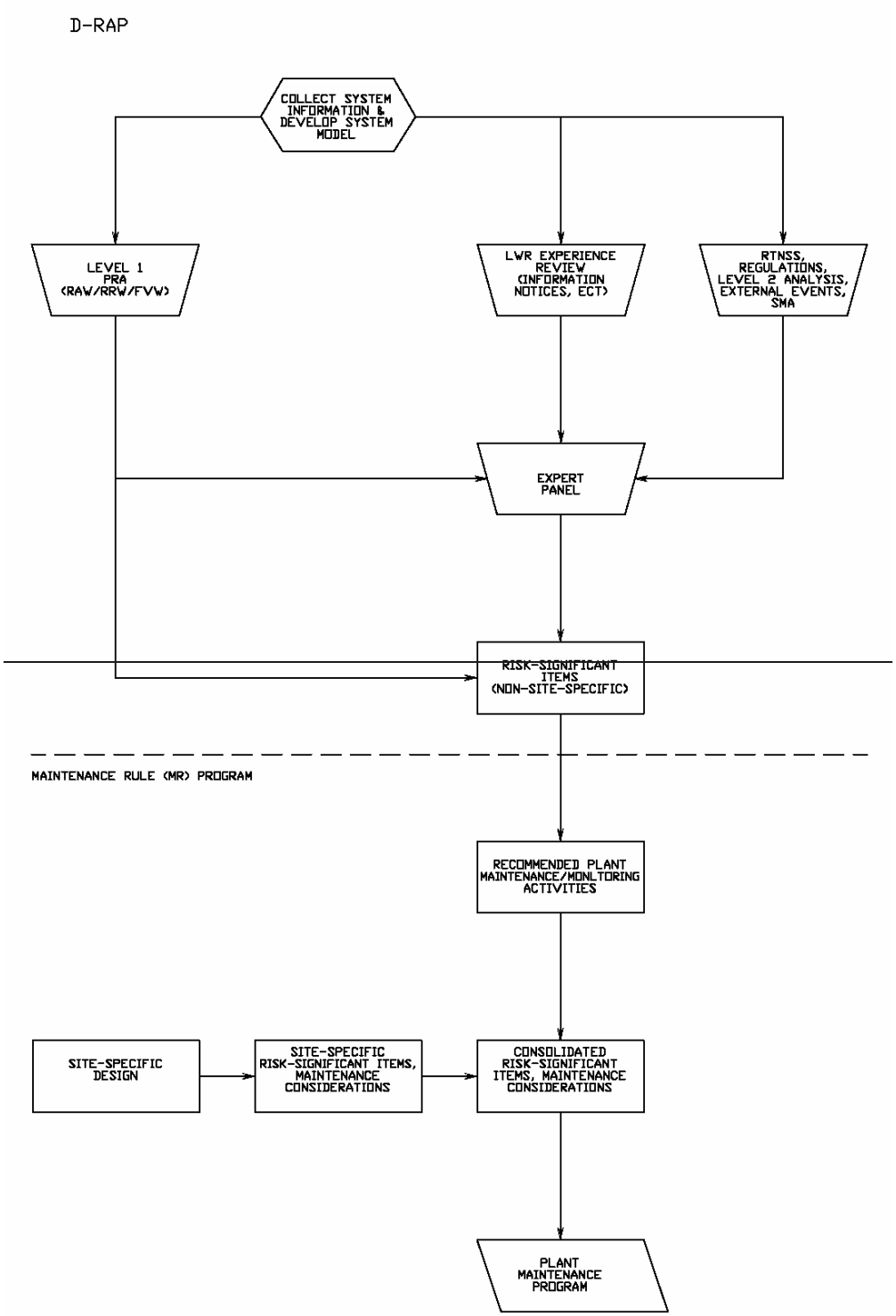
D-RAP
COLLECT SYSTEM INFORMATION & DEVELOP SYSTEM MODEL
LEVEL 1 PRA (RAW/RRW/FVW)
LWR EXPERIENCE REVIEW (INFORMATION NOTICES, ECT)
RTNSS, REGULATIONS, LEVEL 2 ANALYSIS, EXTERNAL EVENTS, SMA
EXPERT PANEL
RISK-SIGNIFICANT ITEMS (NON-SITE-SPECIFIC)
MAINTENANCE RULE (MR) PROGRAM
RECOMMENDED PLANT MAINTENANCE/MONITORING ACTIVITIES
SITE-SPECIFIC DESIGN
SITE-SPECIFIC RISK-SIGNIFICANT ITEMS, MAINTENANCE CONSIDERATIONS
CONSOLIDATED RISK-SIGNIFICANT ITEMS, MAINTENANCE CONSIDERATIONS
PLANT MAINTENANCE PROGRAM

NRC 251

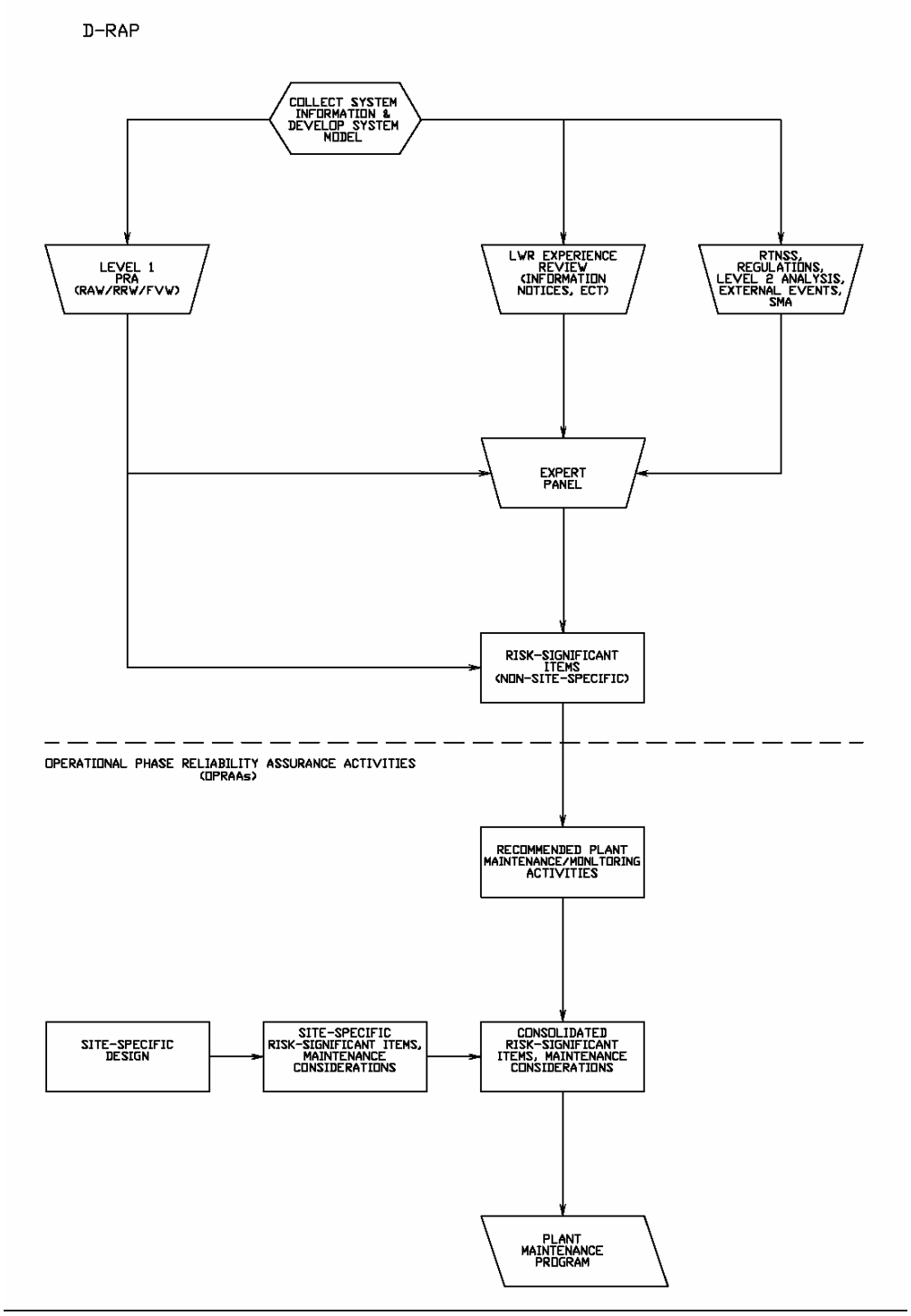

Figure 17.4-1

NRC 251

Design Reliability Assurance Program and
Operational Phase Reliability Assurance Activities~~MR Program~~

The EOF design is discussed in Chapters 13 and 18, including the specification of its location (subsection 18.2.6) and emergency planning, and associated communication interfaces among the main control room, the TSC, and the EOF (Section 13.3).

Subsection 18.2.1.2 provides a description of assumptions and constraints, including utility requirements, that are used as inputs to the human factors engineering program and the human system interface design. As stated earlier under Section 18.8, the human system interface design includes the design of the operation and control centers system (main control room, TSC, remote shutdown room, emergency operations facility, local control stations and associated workstations) and each of the human system interface resources. The main control room design (environment, layout, number and design of workstations) supports emergency operations with a maximum crew compliment consisting of eleven individuals. These eleven include two individuals with senior reactor operator licenses, three with reactor operator licenses, one observer from the NRC, one from the plant owner's management and one communicator.

[*The design of the TSC's interfaces is included with the design of the human system interface*.]* Subsection 18.8.1 provides an implementation plan for the design of the human system interface. As shown in Figure 18.2-3, the results of the human factors engineering program elements are used as input and bases for developing the operation and control center system and human system interface resources functional design. This includes task analysis. Section 18.5 provides the implementation plan for the task analysis activities.

An uninterruptable power supply system provides approximately two hours of backup power supply to the TSC displays should ac power become unavailable.

NRC 245

18.8.3.6 Operations~~al~~ Support Center Mission and Major Tasks

The operations~~al~~ support center (OSC) is not within the scope of the human factors engineering program, but it is an emergency response facility. The mission of the operations~~al~~ support center is to provide a habitable area for operations support personnel and the resources to coordinate the assignment of duties and tasks to personnel outside of the main control room and the technical support center in support of plant emergency operation. The operations~~al~~ support center and the TSC are in different locations. The location of the operations~~al~~ support center is shown in Figure 1.2-18.

NRC 245

The major task of the operations~~al~~ support center is to provide a centralized area and the necessary supporting resources for the assembly of predesignated operations support personnel during emergency conditions. The operations~~al~~ support center provides the resources for communicating with the main control room and the technical support center. This permits personnel reporting to the operations~~al~~ support center to be assigned to duties in support of emergency operations.

NRC 245

NRC 245

*NRC Staff approval is required prior to implementing a change in this information; see DCD Introduction Section 3.5.

18.11 Human Factors Engineering Verification and Validation

A programmatic level description of the AP1000 human factors engineering verification and validation program is provided by Reference 1. Figure 18.11-1 shows the verification and validation activities conducted as part of AP1000 human factors engineering program. Using the programmatic level description, the development of an implementation plan for the AP1000 human factors engineering verification and validation is executed and documented as discussed in Reference 2.

18.11.1 Combined License Information

The Combined License information requested in this subsection has been fully addressed in Reference 2 (APP-GW-GLR-084). No additional work is required by the Combined
NRC 262 Operating License applicant to address the Combined License information requested in this subsection.

NRC 262 The following words represent the original Combined Operating License Information Item commitment, which has been addressed as discussed above:

> Combined License applicants referencing the AP1000 certified design will address the development, execution and documentation of an implementation plan for the verification and validation of the AP1000 human factors engineering program. The programmatic level description of the AP1000 verification and validation program, presented and referenced by Section 18.11, will be used by the Combined License applicant to develop the implementation plan.

18.11.2 References

[*1. WCAP-15860, "Programmatic Level Description of the AP1000 Human Factors Verification and Validation Plan," Revision 2, October 2003.*]*

2. APP-GW-GLR-084, "AP1000 Human Factors Engineering Verification and Validation," Westinghouse Electric Company LLC.

*NRC Staff approval is required prior to implementing a change in this information; see DCD Introduction Section 3.5.

TABLE OF CONTENTS (Cont.)

Section	Title	Page
19.48	Deleted	19.48-1
19.49	Offsite Dose Evaluation	19.49-1
19.50	Importance and Sensitivity Analysis	19.50-1
19.51	Uncertainty Analysis	19.51-1
19.52	Deleted	19.52-1
19.53	Deleted	19.53-1
19.54	Low Power and Shutdown PRA Assessment	19.54-1
19.55	Seismic Margin Analysis	19.55-1
19.55.1	Introduction	19.55-1
19.55.2	Calculation of HCLPF Values	19.55-1
19.55.2.1	Seismic Margin HCLPF Methodology	19.55-1
19.55.2.2	Calculation of HCLPF Values	19.55-1
19.55.3	Seismic Margin Model	19.55-3
19.55.4	Calculation of HCLPF	19.55-3
19.55.5	Sensitivity Analyses	19.55-3
19.55.6	Results and Insights	19.55-3
19.55.7	References	19.55-3
19.56	PRA Internal Flooding Analysis	19.56-1
19.57	Internal Fire Analysis	19.57-1
19.58	Winds, Floods, and Other External Events	19.58-1
19.58.1	Introduction	19.58-1
19.58.2	External Events Analysis	19.58-1
19.58.2.1	Severe Winds and Tornadoes	19.58-1
19.58.2.2	External Floods	19.58-3
19.58.2.3	Transportation and Nearby Facility Accidents	19.58-4
NRC 248 19.58.2.4	Malevolent Aircraft Impact	19.59-7
19.58.3	Conclusion	19.58-7
19.58.4	References	19.58-7
19.59	PRA Results and Insights	19.59-1
19.59.1	Introduction	19.59-1
19.59.2	Use of PRA in the Design Process	19.59-3
19.59.3	Core Damage Frequency from Internal Initiating Events at Power	19.59-3
19.59.3.1	Dominant Core Damage Sequences	19.59-5
19.59.3.2	Component Importances for At-Power Core Damage Frequency	19.59-7
19.59.3.3	System Importances for At-Power Core Damage	19.59-8
19.59.3.4	System Failure Probabilities for At-Power Core Damage	19.59-8
19.59.3.5	Common Cause Failure Importances for At-Power Core Damage	19.59-9
19.59.3.6	Human Error Importances for At-Power Core Damage	19.59-9
19.59.3.7	Accident Class Importances	19.59-10
19.59.3.8	Sensitivity Analyses Summary for At-Power Core Damage	19.59-10

TABLE OF CONTENTS (Cont.)

Section	Title	Page
APPENDIX 19F	MALEVOLENT AIRCRAFT IMPACT	19F-1
19F.1	Introduction	19F-1
	19F.1.2 Scope	19F-1
19F.2	Background	19F-1
19F.3	Results/Conclusions	19F-1
19F.4	References	19F-1

NRC 248

19.58 Winds, Floods, and Other External Events

19.58.1 Introduction

External events considered in the AP1000 PRA are those events whose cause is external to all systems associated with normal and emergency operations situations. Some external events may not pose a significant threat of a severe accident. Some external events are considered at the design stage and have a sufficiently low contribution to core damage frequency or plant risk.

Based upon the guidelines provided in References 19.58-1 and 19.58-2, the following is a list of six~~five~~ external events that are included for AP1000 analysis:

NRC 228

- High winds and tornadoes
- External floods
- Transportation and nearby facility accidents
- Seismic events
- Internal fires
- External fires

NRC 228

The first three external events are addressed in this section. Seismic events and internal fires are addressed in the AP1000 PRA. Based on site specific information, the COL Applicant should reevaluate the qualitative screening of external fires. Accordingly, based on the criteria to screen out external hazards in the PRA, a risk evaluation should be performed if it cannot be demonstrated that the frequency of hazard is less than 1E-7/yr. If any site specific susceptibilities are found, the site specific PRA performed to address COL Holder Item 19.59.10-2 should include external fires.

NRC 228

Chapter 2 defines the site characteristics for which the AP1000 is designed. A site is acceptable if the site characteristics fall within the AP1000 site interface parameters.

19.58.2 External Events Analysis

19.58.2.1 Severe Winds and Tornadoes

The overall methodology recommended by NUREG-1407 for analyzing plant risk due to high winds and tornados is a progressive screening approach. This approach is modified to consider determining the acceptability of hazard frequency and risk. High winds (including tornadoes) can affect plant structures in at least two ways: (1) if wind forces exceed the load capacity of a building or other external facility, the walls or framing might collapse or the structure might overturn from the excessive loading; and (2) if the wind is strong enough, as in a tornado or hurricane, it may be capable of lifting materials and thrusting them as missiles against the plant structures that house safety-related equipment. Critical components or other contents of plant structures not designed to resist missile penetration might be damaged and lose their function.

The NUREG-1407 criterion for high winds and tornados states that "these events pose no significant threat of a severe accident because the current design criteria for wind are dominated by tornadoes having an annual frequency of exceedance of about 10^{-7}." This is interpreted to mean

criteria, the results are considered very conservative for the above reasons. Therefore, no further detailed PRA is necessary for the AP1000 high winds and tornados analysis.

19.58.2.2 External Floods

An external flooding analysis is performed to verify that any significant contribution to core damage frequency – resulting from plant damage caused by storms, dam failure, and flash floods – is accounted for as follows:

> The analysis for external floods begins with an examination of the design basis for the plant, which is documented in Chapter 2 of the AP1000 DCD. The AP1000 is protected against floods up to the 100′ level. The 100′ level corresponds to the plant ground level. From this point, the ground is graded away from the structures. Thus, water will naturally flow away from the structures. Additionally, all seismic Category I SSCs are designed to withstand the effects of flooding. The seismic Category I SSCs below grade (below ground level) are protected against flooding by a water barrier consisting of water stops and a waterproofing system. None of the non-safety SSCs were found to be important based on flooding considerations.
>
> The basic steps involved in an external flooding analysis are similar to those followed for internal flooding in the individual plant examination. However, the focus of attention is on areas, which due to their location and grading, may be susceptible to external flood damage. This requires information on such items as dikes, surface grading, locations of structures, and locations of equipment within the structures. Information such as meteorological data for the site, historical flood height, and frequency data, is also needed.

Only one site indicated susceptibility to external floods, due to hurricane surge water. That site is located at an elevation of 45 feet above sea level. Therefore, the AP1000 100′ level, for this site, corresponds to 45′ above sea level. Per DCD Chapter 3.4.1.1, the ground will be graded away from the structures beginning at the 100′ level and sloping downward away from the structures. ~~The Saffir-Simpson hurricane scale notes that Category 5 hurricanes have the ability to generate storm surges in excess of 18 feet. Hurricane Camille (1969) generated a storm surge of 25 feet along the Mississippi Gulf Coast.~~

NRC 229

Category 5 hurricanes, per the Saffir-Simpson scale, are capable of storm surges greater than 18 feet. The storm surge of record for a hurricane is 27.8 feet recorded for Katrina (2005). Based on historical information, a hurricane storm surge above the 28 foot level may be classified as an extremely rare event. Engineering judgment is used to establish that the frequency of this type of flood is significantly less than the 10^{-7} per year criterion for initiating event frequency.~~Based on the description of a Category 5 hurricane in the Saffir-Simpson hurricane scale, a hurricane storm surge in excess of 18 feet may be classified as an extremely rare event. The ASME has recently approved changes to the ASME PRA Standard to assign a value to an "extremely rare event." That value is defined as 1E-06/year for currently operating plants. Recognizing that the AP1000 design provides additional levels of safety, TR-101 suggests a value of 1E-07/year to define an extremely rare event for the AP1000 design.~~

19.58.2.2 External Floods

An external flooding analysis is performed to verify that any significant contribution to core damage frequency – resulting from plant damage caused by storms, dam failure, and flash floods – is accounted for as follows:

NRC 170

The analysis for external floods begins with an examination of the design basis for the plant, which is documented in Chapter 2 of the AP1000 DCD. The AP1000 is protected against floods up to the 100′ level. The 100′ level corresponds to the plant ground level. From this point, the ground is graded away from the structures. Thus, water will naturally flow away from the structures. Additionally, all seismic Category I SSCs are designed to withstand the effects of flooding. The seismic Category I SSCs below grade (below ground level) are protected against flooding by a water barrier consisting of water stops and a waterproofing system. None of the non-safety SSCs were found to be important based on flooding considerations. ~~The AP1000 is designed against flood levels less than plant elevation 100 feet.~~

The basic steps involved in an external flooding analysis are similar to those followed for internal flooding in the individual plant examination. However, the focus of attention is on areas, which due to their location and grading, may be susceptible to external flood damage. This requires information on such items as dikes, surface grading, locations of structures, and locations of equipment within the structures. Information such as meteorological data for the site, historical flood height, and frequency data, is also needed.

TR-134, Rev 0

NRC 170

Only one site indicated susceptibility to external floods, due to hurricane surge water. That site is located at an elevation of 45 feet above sea level. Therefore, the AP1000 100′ level, for this site, corresponds to 45′ above sea level. Per DCD Chapter 3.4.1.1, the ground will be graded away from the structures beginning at the 100′ level and sloping downward away from the structures. The Saffir-Simpson hurricane scale notes that Category 5 hurricanes have the ability to generate storm surges in excess of 18 feet. Hurricane Camille (1969) generated a storm surge of 25 feet along the Mississippi Gulf Coast.

~~Category 5 hurricanes, per the Saffir-Simpson scale, are capable of storm surges greater than 18 feet. However, the probability of generating a storm surge of 18 feet, combined with the frequency of a Category 5 hurricane, results in a small event frequency. Even conservatively assuming a storm surge of 18 feet, the frequency of an event capable of generating this storm surge is small. Engineering judgment is used to establish that the frequency of this type of flood is significantly less than the 10^{-7} per year criterion for initiating event frequency.~~Based on the description of a Category 5 hurricane in the Saffir-Simpson hurricane scale, a hurricane storm surge in excess of 18 feet may be classified as an extremely rare event. The ASME has recently approved changes to the ASME PRA Standard to assign a value to an "extremely rare event." That value is defined as 1E-06/year for currently operating plants. Recognizing that the AP1000 design provides additional levels of safety, TR-101 suggests a value of 1E-07/year to define an extremely rare event for the AP1000 design.

As a sensitivity study, the 1.0E-07~~10^{-7}~~/yr initiating event frequency is taken as the frequency of an event that may challenge the nonsafety structures in the plant. This sensitivity study also considers

failure of the switchyard due to flooding. LOSP with failure of the nonsafety systems CCDP was developed. Equation 1 was used to determine the resultant CDF.

As expected, the risk due to a flooding event is low for the AP1000. The resultant CDF of 5.85E-15/yr is an insignificant contribution to total plant CDF.

For other sites, the AP1000 is designed to site characteristics described in Chapter 2. The site selection criterion provides that for an accident that has potential consequences serious enough to affect the safety of the plant to the extent that 10 CFR 100 guidelines are exceeded, the annual frequency of occurrence is less than 1.0E-06~~10^{-6}~~ per year. ~~To consider the already low risk of the AP1000 design,~~ This criterion should be extended to an annual frequency of occurrence less than 1.0E-07~~10^{-7}~~ per year for the AP1000 design. As none of the surveyed sites indicated susceptibility to floods due to dam failure and/or flash floods, those events should be considered on a site-by-site basis.

NRC 170

TR-134, Rev 0

19.58.2.3 Transportation and Nearby Facility Accidents

These events consist of accidents related to transportation near the nuclear power plant and accidents at industrial and military facilities in the vicinity. The following modes of transportation are considered:

- Aviation (commercial/general/military)
- Marine (ship/barge)
- Pipeline (gas/oil)
- Railroad
- Truck

19.58.2.3.1 Aviation Accidents

For limiting event frequency of 1.21E-06/year with most of that frequency for small aircraft, and with commercial aircraft contribution 9.40E-09/year, then the following discussion is applicable.

A conservative analysis was performed to evaluate the risk due to small aircraft accidents onsite. This analysis assumes a LOSP and loss of component cooling water/service water event, and conservatively fail a set of standby nonsafety systems. This is acceptable because it is unlikely that a small aircraft accident would challenge the passive safety systems inside containment. This leaves only the nonsafety systems outside containment as vulnerable. However, this evaluation is conservative because it is unlikely that a small aircraft would have the capacity to fail such a large area of the AP1000.

Equation 19.58-1 is used to determine the resultant CDF. A CDF of 7.08E-14/yr is calculated and is an insignificant contribution to total plant CDF of approximately 5.08E-07/yr. Therefore, sites that can demonstrate an aviation event frequency less than or equal to 1.21E-06/yr for small aircraft accidents are bounded by this evaluation.

Larger commercial aircraft may have the capacity to challenge SSCs within the AP1000 containment. However, the containment structure and safety systems are designed to withstand

19.58.2.3.3 Pipeline Accidents

Pipeline accidents could pose a hazard to the AP1000 due to the release of hazardous material or the possibility of an explosion and resulting damage to the plant. For a site with a 30-inch gas line approximately 5800 feet away, a semi-quantitative evaluation is performed.

Considerations for the evaluation are as follows:

- Gas pipe rupture frequency
- Gas cloud formation probability
- Gas cloud transportation and nondispersion probability
- Gas cloud ignition probability onsite

Figure 19.58-1 is considered to further evaluate the probability of this accident. When then considering the probability of forming a dense gas cloud, and the probability of the wind speed and direction to be in the ranges necessary to transport the gas cloud 5800 feet to the site, without dispersing the gas, including ignition of the gas cloud onsite in a location that may challenge the plant, this probability becomes very low.

Site habitability is also a concern for toxic materials. However, the AP1000 has an additional level of defense against toxic airborne material. With advanced warning, the operators may actuate passive control room habitability. This system isolates the control room from normal HVAC and actuates a separate system supplied from compressed air containers. The compressed air slightly pressurizes the control room above atmospheric pressure, preventing the entrance of toxic material in the control room. This system is available for 72 hours, which is adequate time to withstand the event. The expected frequency value is expected to be below the initiating event criterion of 1.0E-07 events/year. Therefore, no further quantitative evaluation is necessary.

19.58.2.3.4 Railroad and Truck Accidents

Railroad accidents could pose a hazard to the AP1000 due to the release of hazardous material or the possibility of an explosion and resulting damage to the plant. Toxic material releases were evaluated in the marine accident evaluation as to not be important to AP1000 plant risk. Significant damage to the AP1000 plant was evaluated in the aviation accident evaluation. No railroad accidents are expected to result in the amount of damage that may be seen from an aviation accident. This is especially true considering the increased security barriers established at U.S. nuclear power plants.

The AP1000 is designed to site characteristics described in Chapter 2. The site selection criterion provides that, for an accident that has potential consequences serious enough to affect the safety of the plant to the extent that 10 CFR 100 guidelines are exceeded, the annual frequency of occurrence is less than 1.0E-06 per year. This criterion should be extended to an annual frequency of occurrence less than 1.0E-07 per year for the AP1000 design.

19.58.2.4 Malevolent Aircraft Impact

NRC 248

Malevolent aircraft impact is discussed in Appendix 19F.

19.58.3 Conclusion

The risk due to external hazards is low for the AP1000 design for the participating sites listed in Section 3.2. The AP1000 design is shown to be highly robust against the external events discussed in this section. The design is resilient against high winds, external floods, and other external events that challenge various equipment in the plant.

NRC 228

Based on site specific information, the COL Applicant should reevaluate the qualitative screening of external fires. Accordingly, based on the criteria to screen out external hazards in the PRA, a risk evaluation should be performed if it cannot be demonstrated that the frequency of hazard is less than 1E-7/yr. If any site specific susceptibilities are found, the site specific PRA performed to address COL Holder Item 19.59.10-2 should include external fires.

The following conclusions and insights are derived from the AP1000 external events assessment for events at power:

1. High winds and tornados were quantitative evaluated to be of low risk to the AP1000 design for each of the participating sites. A bounding assessment is provided to show that the expected CDF due to any one of these events does not exceed 1.0E-08 events/year. The same is true for the aggregate results. Sensitivity studies were performed to determine that there is low risk for more limiting scenarios. No further analysis is suggested.

2. The AP1000 is designed to flooding levels described in Chapter 2. The site selection criterion provides that, for an accident that has potential consequences serious enough to affect the safety of the plant to the extent that 10 CFR 100 guidelines are exceeded, the annual frequency of occurrence is less than 1.0E-06 per year. This criterion can be extended to an annual frequency of occurrence less than 1.0E-07 per year for the AP1000 design. No further analysis is suggested.

3. Transportation and nearby facilities accidents are qualitatively evaluated to be of low risk importance and do not warrant further evaluation.

19.58.4 References

19.58-1 "Individual Plant Examination of External Events (IPEEE) for Severe Accident Vulnerabilities - 10 CFR 50.54(f)," Generic Letter 88-20, Supplement 4, June 28, 1991.

19.58-2 NUREG-1407, "Procedural and Submittal Guidance for the Individual Plant Examination of External Events (IPEEE) for Severe Accident Vulnerabilities," June 1991.

19.58-3 National Weather Service, "The Enhanced Fujita Scale," February 2, 2007, http://www.spc.noaa.gov/efscale/.

APPENDIX 19F MALEVOLENT AIRCRAFT IMPACT

19F.1 Introduction

The design of AP1000 takes into account the potential effects of the impact of a large commercial aircraft. The impacting aircraft analyzed is based upon the impulse time curve provided by the NRC in July 2007. The impact of a large commercial aircraft is beyond design basis.

19F.1.2 Scope

The evaluation of plant damage caused by the impact of a commercial aircraft is a complex analysis problem involving phenomena associated with structural impact, shock-induced vibration, and fire effects. The analysis of the aircraft impact considers structural damage, such as that caused by the penetration of hardened components (e.g., engine rotors, landing gear).

An assessment of the effects of aircraft fuselage and wing structure is performed.

An assessment of the effects of shock-induced vibration on systems, structures, and components is performed.

An assessment of the penetration of hardened aircraft components, such as engine rotors and landing gear is performed.

NRC 248

Perforation of analyzed structural components is not predicted; therefore, realistic assessments of the damage to internal systems, structures, and components caused by 1) burning aviation fuel and 2) secondary impacts are not required.

19F.2 Background

It is prudent that the design of AP1000 take into account the potential effects of the impact of a large commercial aircraft. The NRC has determined that the impact of a large commercial aircraft is a beyond design basis event. An assessment of this type demonstrates the inherent robustness of AP1000 with regard to potential aircraft impact.

19F.3 Results/Conclusions

The AP1000 Aircraft Impact Assessment is detailed in Technical Report APP-GW-GLR-126 (Reference 1). The assessment concludes that AP1000 can continue to provide adequate protection of the public health and safety with respect to aircraft impact as defined by the NRC. The aircraft impact would not inhibit AP1000's core cooling capability, containment integrity, spent fuel pool integrity, or adequate spent fuel cooling based on best estimate calculations.

19F.4 References

1. APP-GW-GLR-126, March 2008, "AP1000 Nuclear Island Response to Aircraft Impact."