U.S. Department of Energy
Office of Civilian Radioactive Waste Management

www.ocrwm.doe.gov

DOE Opening Remarks

Presented to:
U.S. Nuclear Regulatory Commission

Presented by:
Edward F. Sproat III
Director, Office of Civilian Radioactive Waste Management
U. S. Department of Energy

June 19, 2008
Rockville, Maryland

Meeting Purpose

- Provide an opportunity for DOE to brief NRC and public on structure and content of Yucca Mountain Repository License Application (LA)
- Facilitate prompt, efficient NRC review of LA by demonstrating how LA complies with requirements set forth in 10 CFR 63 and the guidance contained in NUREG-1804, Yucca Mountain Review Plan (YMRP)

Desired Outcome

- Knowledge of structure and content of LA and supporting documents
- Understand tools DOE has made available to NRC and public to locate sections of LA that address one or more specific regulations and YMRP acceptance criteria
- Understand general technical approaches taken to meet key regulatory requirements

Organizational Responsibilities Related to Review of LA

- Regulatory Authority Office (RAO)
  - Principal point-of-contact and overall responsibility for interactions with NRC
  - Except for OCRWM Director and Deputy Director, DOE initiated communication to NRC relating to LA review process will be through RAO
  - Licensing Support Office (LSO) is fully operational and will serve as primary point-of-contact for facilitating interactions with NRC management and designated project managers

Organizational Responsibilities Related to Review of LA (continued)

- Office of Chief Engineer
  - Responsible for repository design and preclosure nuclear safety
  - Supported by management & operating contractor
- Office of Chief Scientist
  - Responsible for postclosure performance assessment and performance confirmation
  - Supported by the lead national laboratory and U.S. Geological Survey

Organizational Responsibilities Related to Review of LA (continued)

- Disposal Operations Office
  - Responsible for programmatic functions and organizations for repository operations
  - Supported by the management & operations contractor
- Office of Quality Assurance
  - Responsible for the Quality Assurance Requirements and Description (QARD)
- Naval Nuclear Propulsion Program
  - Responsible for the Technical Support Document

U.S. Department of Energy
Office of Civilian Radioactive Waste Management

www.ocrwm.doe.gov

Overview of License Application and Supporting Documents

Presented to:
U.S. Nuclear Regulatory Commission

Presented by:
William Boyle
Director, Regulatory Authority Office
Office of Civilian Radioactive Waste Management
U.S. Department of Energy

June 19, 2008
Rockville, Maryland

Presentation Outline

- Regulatory Authority Office organization
- Overall layout of license application (LA)
- Supporting documents
- Roadmaps
- Meeting agenda

Regulatory Authority Office Organization

- **Licensing Support Group**
  - Primary communication interface with NRC headquarters staff
  - Provides coordination and support to the RAI response process
- **License Application Development and Defense Group**
  - Manages LA configuration control and updates
  - Responsible for development of RAI responses
- **Regulatory Compliance Group**
  - Primary communication interface with NRC staff assigned to Las Vegas from either NRC headquarters or Region IV
  - Provides support to the NRC On-Site representatives and resident inspectors

Scope of License Application

- Requests construction authorization for full extent of facilities within GROA
- LA will be updated to request authorization to receive and possess high-level radioactive waste when construction of necessary facilities for waste receipt and emplacement near completion
- LA describes complete repository

Environmental Protection Agency Standard

- LA based on draft Environmental Protection Agency standard and NRC's proposed revisions to 10 CFR 63 (70 Federal Register 53313)
- Revisions will be made to LA based on final rules, if necessary

Approach to Analysis

- Design detail in LA is consistent with 10 CFR 63 requirements and NUREG-1804, Yucca Mountain Review Plan (YMRP) expectations regarding content
- Construction design details are being developed based on the design in the LA
- Representative container designs have been evaluated to demonstrate acceptability of methodology and to define envelope for future design and procurement
  - Canisters - including transportation, aging and disposal (TAD) canisters, dual-purpose canisters (DPCs), high-level radioactive waste (HLW) canisters, DOE spent nuclear fuel (SNF) canisters
  - Transportation casks
  - Waste packages

Approach to Analysis (continued)

- Waste forms and their packaging have been evaluated to demonstrate acceptability of methodology and to define an envelope for future acceptance
  - Commercial SNF
  - HLW
  - DOE SNF
  - Naval SNF
- Prior to receipt of waste forms and containers, analysis for final designs will be performed using NRC-approved methodologies to ensure characteristics are within envelopes described in LA

Structure of License Application

- Structure of application in accordance with 10 CFR 63.21(a)
  - General Information (GI)
  - Safety Analysis Report (SAR)
  - Classified Information submitted separately - Naval Nuclear Propulsion Program (NNPP) Technical Support Document
  - Final Environmental Impact Statement
- Supplemental Environmental Impact Statement – submitted after LA in June 2008

Structure of General Information

- Content in accordance with 10 CFR 63.21(b)
  - GI-1 – General Information – 10 CFR 63.21(b)(1)
  - GI-2 – Proposed Schedules for Construction, Receipt, and Emplacement of Waste – 10 CFR 63.21(b)(2)
  - GI-3 – Physical Protection Plan – 10 CFR 63.21(b)(3)
  - GI-4 – Materials Control and Accounting Program – 10 CFR 63.21(b)(4)
  - GI-5 – Site Characterization – 10 CFR 63.21(b)(5)

Structure of Safety Analysis Report

- Includes content required by 10 CFR 63.21(c)
- Organization of SAR generally uses structure different from 10 CFR 63.21(c)
  - Based on facilities rather than technical topics
- To facilitate review, mapping of SAR sections to 10 CFR 63.21(c) provided

Structure of Safety Analysis Report

Chapter 1	Repository Safety Before Permanent Closure
Chapter 2	Repository Safety After Permanent Closure
Chapter 3	Research and Development Program to Resolve Safety Questions
Chapter 4	Performance Confirmation Program
Chapter 5	Management Systems

Official Use Only Information

- SAR contains material that DOE has determined to be Official Use Only (OUO) information using Joint DOE and NRC Sensitive Unclassified Information and Classification Guide (~140 figures)
- Exempt from public disclosure under Freedom of Information Act and 10 CFR 2.390 and appropriately marked
- Pages of SAR containing OUO information segregated into SAR Appendix A - printed as separate volume

Structure of Naval Nuclear Propulsion Program Technical Support Document

- Addresses specific topics, in classified manner, covered in four SAR sections, 1.5.1.4 (waste form description), 1.14 (preclosure criticality), 2.2.1.4.1 (postclosure criticality), 2.3.7 (radionuclide inventory and postclosure degradation model)
- Would be included in SAR except for classified material controls
- Uses same section numbering as rest of SAR and integrated with it
- SAR contains as much unclassified information on Naval SNF as feasible

Supporting Documents

- Quality Assurance Requirements and Description (QARD), Revision 20 – Incorporated by Reference
- Submitted to NRC by DOE letter dated February 5, 2008

Primary References Submitted

- 196 documents submitted for inclusion on docket with LA (over 60,000 pages)
  - Analysis and modeling reports
  - Preclosure safety analysis documents
  - Scientific/engineering documents
- 12 additional classified documents submitted with NNPP Technical Support Document
- Basis of selection
  - Contribution to understanding of LA
  - Content facilitates NRC review
  - Referenced frequently in LA and supports multiple LA sections

References Cited at the End of LA Sections

- Project generated documents - available on Licensing Support Network (excludes classified documents)
- Publicly available documents - published papers, textbooks, etc.
- Identify source of information in LA and additional detail

Roadmaps

- Cross-reference tables in major LA sections
  - Table at beginning of section lists regulations and NUREG-1804, Yucca Mountain Review Plan (YMRP) acceptance criteria addressed
  - Mapping reflects proposed changes to 10 CFR 63
  - Section subheadings list applicable YMRP acceptance criteria
  - Regulations and acceptance criteria listed in multiple LA sections, as appropriate, when multiple sections contribute significantly to compliance with regulations

Roadmaps (continued)

- Cross-reference Matrix
  - Submitted with LA to serve as aid to reviewers
  - Allows reviewers to easily identify sections of LA that address specific regulations or YMRP acceptance criteria
  - Four sorts of matrix provided
    - 10 CFR 63 to LA
    - LA to 10 CFR 63
    - YMRP to LA
    - LA to YMRP

Key Technical Issues

- Mapping of 293 key technical issues (KTI) agreement items transmitted to NRC
- KTI nomenclature not used in LA
- LA addresses requirements of 10 CFR 63 and guidance of YMRP

Grouping of LA Sections

GI-1	General Description
GI-2	Proposed Schedules for Construction, Receipt, and Emplacement of Waste
GI-3	Physical Protection Plan
GI-4	Material Control and Accounting Program
GI-5	Site Characterization
SAR-1.0	Repository Safety Before Permanent Closure
SAR-1.1	Site Description As It Pertains to Preclosure Safety Analysis
SAR-1.2	Surface Facility Structures, Systems, and Components and Operational Process Activities (8 Subsections)
SAR-1.3	Subsurface Structures, Systems, and Components and Operational Process Activities (6 Subsections)
SAR-1.4	Infrastructure Structures, Systems, Components, Equipment, and Operational Process Activities (5 Subsections)
SAR-1.5	Waste Form and Waste Package (2 Subsections)
SAR-1.6	Identification of Hazards and Initiating Events
SAR-1.7	Event Sequence Analysis
SAR-1.8	Consequence Analysis
SAR-1.9	Structures, Systems, and Components Important to Safety; Natural and Engineered Barriers Important to Waste Isolation; Safety Controls; and Measures to Ensure Availability of the Safety Systems
SAR-1.10	Meeting the As Low As Is Reasonably Achievable Requirements for Normal Operations and Category 1 Event Sequences
SAR-1.11	Plans for Retrieval and Alternate Storage of Radioactive Wastes
SAR-1.12	Plans for Permanent Closure, Decontamination, and Dismantlement of Surface Facilities
SAR-1.13	Equipment Qualification Program
SAR-1.14	Nuclear Criticality Safety
SAR-2.0	Repository Safety After Permanent Closure
SAR-2.1	System Description and Demonstration of Multiple Barriers
SAR-2.2	Scenario Analysis and Event Probability
SAR-2.3	Model Abstraction (11 Subsections)
SAR-2.4	Demonstration of Compliance with the Postclosure Public Health and Environmental Standards
SAR-3.0	Research and Development Program to Resolve Safety Questions
SAR-4.0	Performance Confirmation Program
SAR-5.0	Management Systems (11 Subsections)

- Surface Design
- Subsurface Design
- PCSA
- Postclosure
- Programmatic

Mapping of 10 CFR 63.21 to the Yucca Mountain Repository LA

63.21(b)(1)	GI-1	• General Description
63.21(b)(2)	GI-2	• Proposed Schedules for Construction, Receipt, and Emplacement of Waste
63.21(b)(3)	GI-3	• Physical Protection Plan
63.21(b)(4)	GI-4	• Material Control and Accounting Program
63.21(b)(5)	GI-5	• Site Characterization
63.21(c)(1)	SAR 1.1	• Site Description As It Pertains to Preclosure Safety Analysis
	SAR 2.2	• Scenario Analysis and Event Probability
63.21(c)(1)(i)	SAR 1.1	• Site Description As It Pertains to Preclosure Safety Analysis
63.21(c)(1)(ii)	SAR 1.1	• Site Description As It Pertains to Preclosure Safety Analysis
	SAR 2.3	• Model Abstraction
63.21(c)(1)(iii)	SAR 1.1	• Site Description As It Pertains to Preclosure Safety Analysis
	SAR 2.3	• Model Abstraction
63.21(c)(1)(iv)	SAR 2.3.10	• Biosphere Transport and Exposure
63.21(c)(2)	SAR 1.2	• Surface Facility Structures, Systems, and Components and Operational Process Activities
	SAR 1.3	• Subsurface Structures, Systems, and Components and Operational Process Activities
	SAR 1.4	• Infrastructure Structures, Systems, and Components and Operational Process Activities
	SAR 1.5	• Waste Form and Waste Package
63.21(c)(3)	SAR 1.2	• Surface Facility Structures, Systems, and Components and Operational Process Activities
	SAR 1.3	• Subsurface Structures, Systems, and Components and Operational Process Activities
	SAR 1.4	• Infrastructure Structures, Systems, and Components and Operational Process Activities
	SAR 1.5	• Waste Form and Waste Package
63.21(c)(4)	SAR 1.5	• Waste Form and Waste Package
63.21(c)(5)	SAR 1.2	• Surface Facility Structures, Systems, and Components and Operational Process Activities
	SAR 1.6	• Identification of Hazards and Initiating Events
	SAR 1.7	• Event Sequence Analysis
	SAR 1.8	• Consequence Analysis
	SAR 1.9	• Structures, Systems , and Components Important to Safety, Natural and Engineered Barriers Important to Waste Isolation, Safety Controls, and Measures to Ensure Availability of the Safety Systems
63.21(c)(6)	SAR 1.2	• Surface Facility Structures, Systems, and Components and Operational Process Activities
	SAR 1.4	• Infrastructure Structures, Systems, and Components and Operational Process Activities
	SAR 5.11	• Operational Radiation Protection Program
63.21(c)(7)	SAR 1.11	• Plans for Retrieval and Alternate Storage of Radioactive Wastes

00636PR_LA10CFR6321_part1.ai

Mapping of 10 CFR 63.21 to the Yucca Mountain Repository LA (Continued)

63.21(c)(8)	SAR 1.10 SAR 1.12	• Meeting the As Low As is Reasonably Achievable Requirements for Normal Operations and Category 1 Event Sequences • Plans for Permanent Closure, Decontamination, and Dismantlement of Surface Facilities
63.21(c)(9)	SAR 2.1 SAR 2.2 SAR 2.3	• System Description and Demonstration of Multiple Barriers • Scenario Analysis and Event Probability • Model Abstraction
63.21(c)(10)	SAR 2.3.5	• In-Drift Physical and Chemical Environment
63.21(c)(11)	SAR 2.4	• Demonstration of Compliance with the Postclosure Public Health and Environmental Standards
63.21(c)(12)	SAR 2.4	• Demonstration of Compliance with the Postclosure Public Health and Environmental Standards
63.21(c)(13)	SAR 2.4	• Demonstration of Compliance with the Postclosure Public Health and Environmental Standards
63.21(c)(14)	SAR 2.1	• System Description and Demonstration of Multiple Barriers
63.21(c)(15)	SAR 2.3 SAR 2.4	• Model Abstraction • Demonstration of Compliance with the Postclosure Public Health and Environmental Standards
63.21(c)(16)	SAR 3	• Research and Development Program to Resolve Safety Questions
63.21(c)(17)	SAR 4	• Performance Confirmation Program
63.21(c)(18)	SAR 1.9 SAR 5.10	• Structures, Systems , and Components Important to Safety, Natural and Engineered Barriers Important to Waste Isolation, Safety Controls, and Measures to Ensure Availability of the Safety Systems • License Specifications
63.21(c)(19)	SAR 5.4	• Expert Elicitation
63.21(c)(20)	SAR 5.1	• Quality Assurance
63.21(c)(21)	SAR 5.7	• Emergency Planning
63.21(c)(22)		(Broken down by subpart)
63.21(c)(22)(i)	SAR 5.3	• Training and Certification of Personnel
63.21(c)(22)(ii)	SAR 5.3	• Training and Certification of Personnel
63.21(c)(22)(iii)	SAR 5.3	• Training and Certification of Personnel
63.21(c)(22)(iv)	SAR 5.5	• Plans for Initial Startup Activities and Testing
63.21(c)(22)(v)	SAR 5.6	• Plans and Procedures for Conduct of Normal Activities, Including Operations, Maintenance, Surveillance, and Periodic Testing
63.21(c)(22)(vi)	SAR 1.12	• Plans for Permanent Closure, Decontamination, and Dismantlement of Surface Facilities
63.21(c)(22)(vii)	SAR 5.9	• Uses of GROA for Purposes Other then Disposal of Radioactive Wastes
63.21(c)(23)	SAR 5.2	• Records, Reports, Tests, and Inspections
63.21(c)(24)	SAR 5.8	• Controls to Restrict Access and Regulate Land Uses

00636PR_LA10CFR6321_part2.ai

SAR 1.13 Equipment Qualification Program – Not called out in 10 CFR 63.21
SAR 1.14 Nuclear Criticality Safety called out in 10 CFR 63.112(e)(6)

U.S. Department of Energy
Office of Civilian Radioactive Waste Management

www.ocrwm.doe.gov

Overview of Repository and Operation

Presented to:
U.S. Nuclear Regulatory Commission

Presented by:
Paul Harrington
Director, Office of the Chief Engineer
Office of Civilian Radioactive Waste Management
U.S. Department of Energy

June 19, 2008
Rockville, Maryland

Presentation Outline

- Site Description and Boundaries
- Waste Receipt and Waste Form Description
- Waste Packages
- Nuclear Surface Facilities
- Support Facilities
- Subsurface Operations
- Phased Construction
- Retrieval
- Repository Closure

Site Description and Boundaries

- Yucca Mountain is located on federal lands in Nye County, Nevada approximately 90 miles northwest of Las Vegas
- The site consists of lands that are or will be permanently withdrawn and reserved for DOE use
- Waste handling operations will be conducted within Geologic Repository Operations Area (GROA) located within site
- License application (LA) requests construction authorization for full suite of facilities within GROA

GI-1

Geologic Repository Operations Area and Site Boundaries

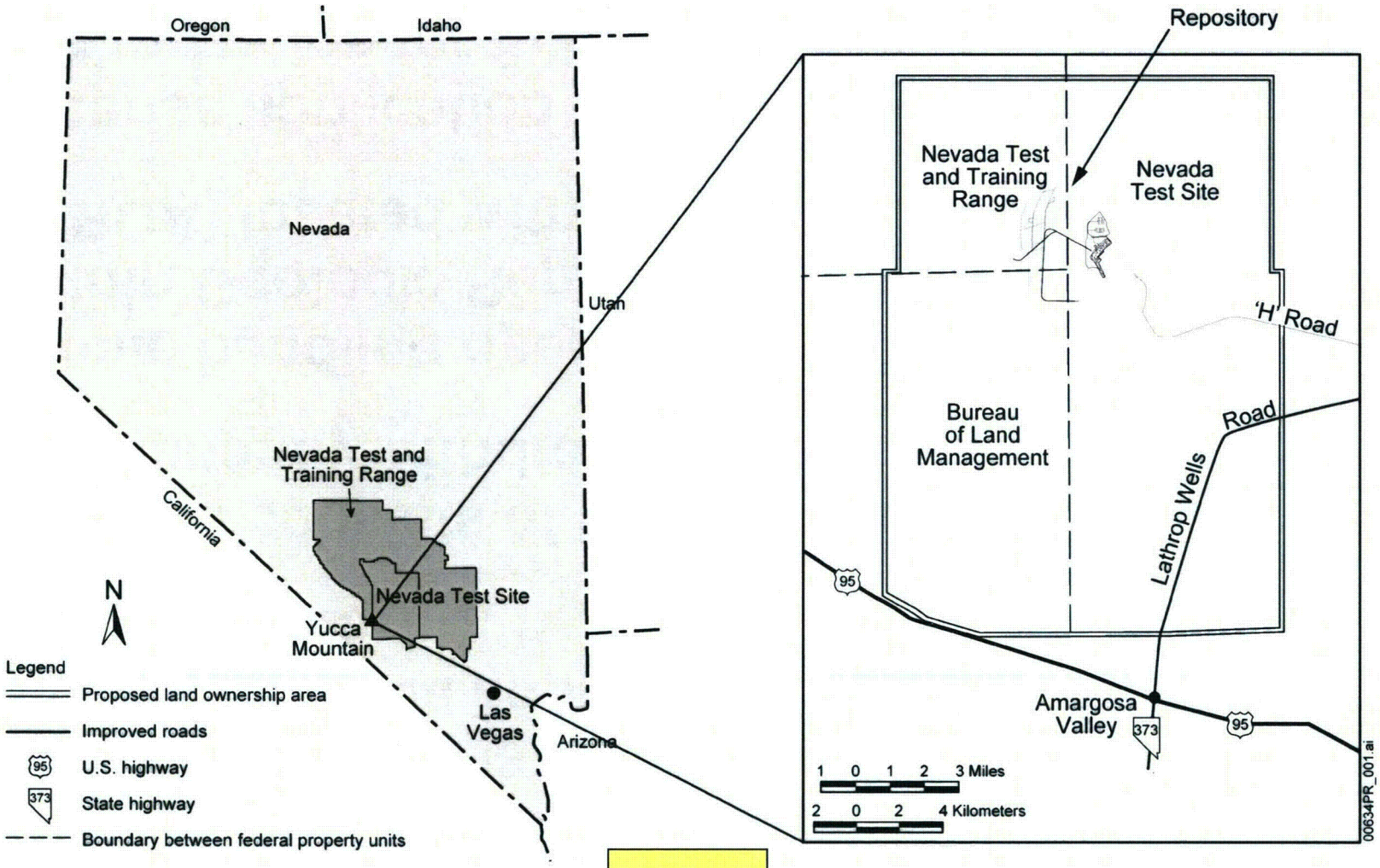

GI-1

Taken from GI Figure 1-2

Waste Receipt and Waste Form Description

- Commercial spent nuclear fuel (SNF)
  - ~90% of commercial SNF received in transportation, aging, and disposal (TAD) canisters
  - ~10% of commercial SNF received uncanistered or in dual-purpose canisters (DPCs) and loaded into TAD canisters

SAR 1.5.1

Waste Receipt and Waste Form Description

(Continued)

- TAD canister
  - To be certified as part of 10 CFR 71 transportation system
  - TADs loaded at utilities under 10 CFR 50 license
  - TADS in dry storage at utilities under 10 CFR 72 license
  - Designed to satisfy aging operations at repository
  - Designed to meet 10 CFR 63 disposal requirement
  - Representative canister analyzed in Preclosure Safety Analysis (PCSA)

SAR 1.5.1 and 1.7

Waste Receipt and Waste Form Description

(Continued)

- DOE SNF in disposable canisters
  - Bulk of waste composed of
    - DOE production reactors (N Reactor)
    - Commercial demonstration—Four reactors
    - Domestic and foreign research and training reactors
    - High-Flux Beam Reactor (Savannah River Site)
    - Fast Flux Test Facility (Hanford and Idaho National Laboratory)
    - TRIGA (Hanford and Idaho National Laboratory)
    - Advanced Test Reactor (Idaho National Laboratory)

SAR 1.5.1

Waste Receipt and Waste Form Description

(Continued)

- High-level radioactive waste (HLW) as vitrified glass in disposable canisters
  - Hanford Waste Treatment and Immobilization Plant
  - Defense Waste Processing Facility at Savannah River Site
  - Idaho National Laboratory
  - West Valley Demonstration Project
- Naval SNF
  - Shipped in two standard disposable canisters

SAR 1.5.1

Waste Packages

- Waste packages
  - Loaded with disposable canisters
  - Welded closed in Initial Handling Facility and Canister Receipt and Closure Facilities
  - Emplaced in subsurface
- Six waste package configurations
  - 21-PWR/44-BWR TAD Waste Package
  - 5-DHLW/DOE SNF Short
  - 5-DHLW/DOE SNF Long
  - 2-MCO/2-DHLW

    } Codisposal Waste Packages
  - Naval Short
  - Naval Long

    } Naval Waste Packages

SAR 1.5.2

Waste Form and Waste Package Configurations

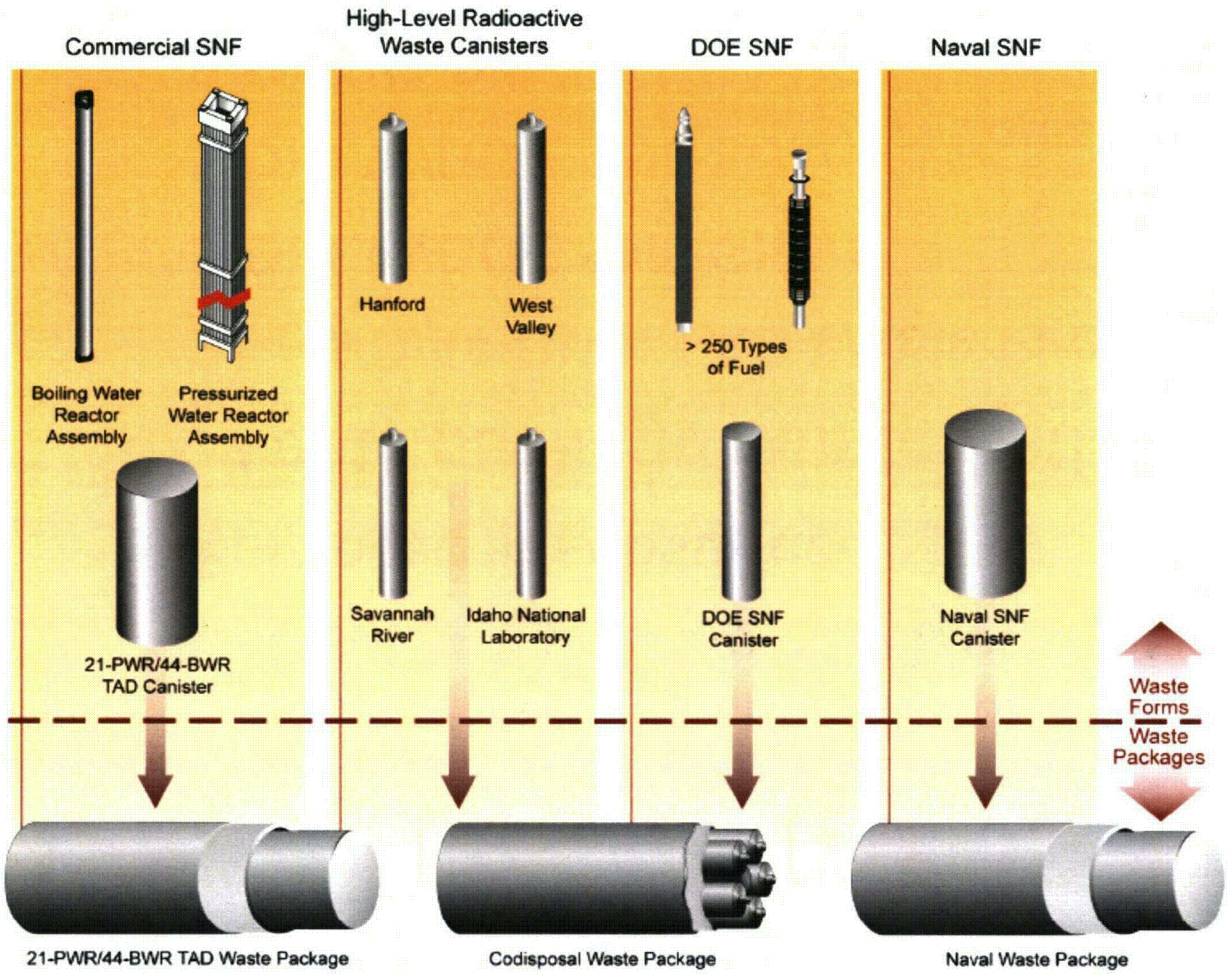

SAR Figure 1.5.2-1

SAR 1.5.1

SAR 1.5.2

Simplified Waste Handling Operations

SAR 1.2.1 – Surface Operations Overview
SAR 1.2.2 – Surface Structural Mechanical Handling Equipment and HVAC Design

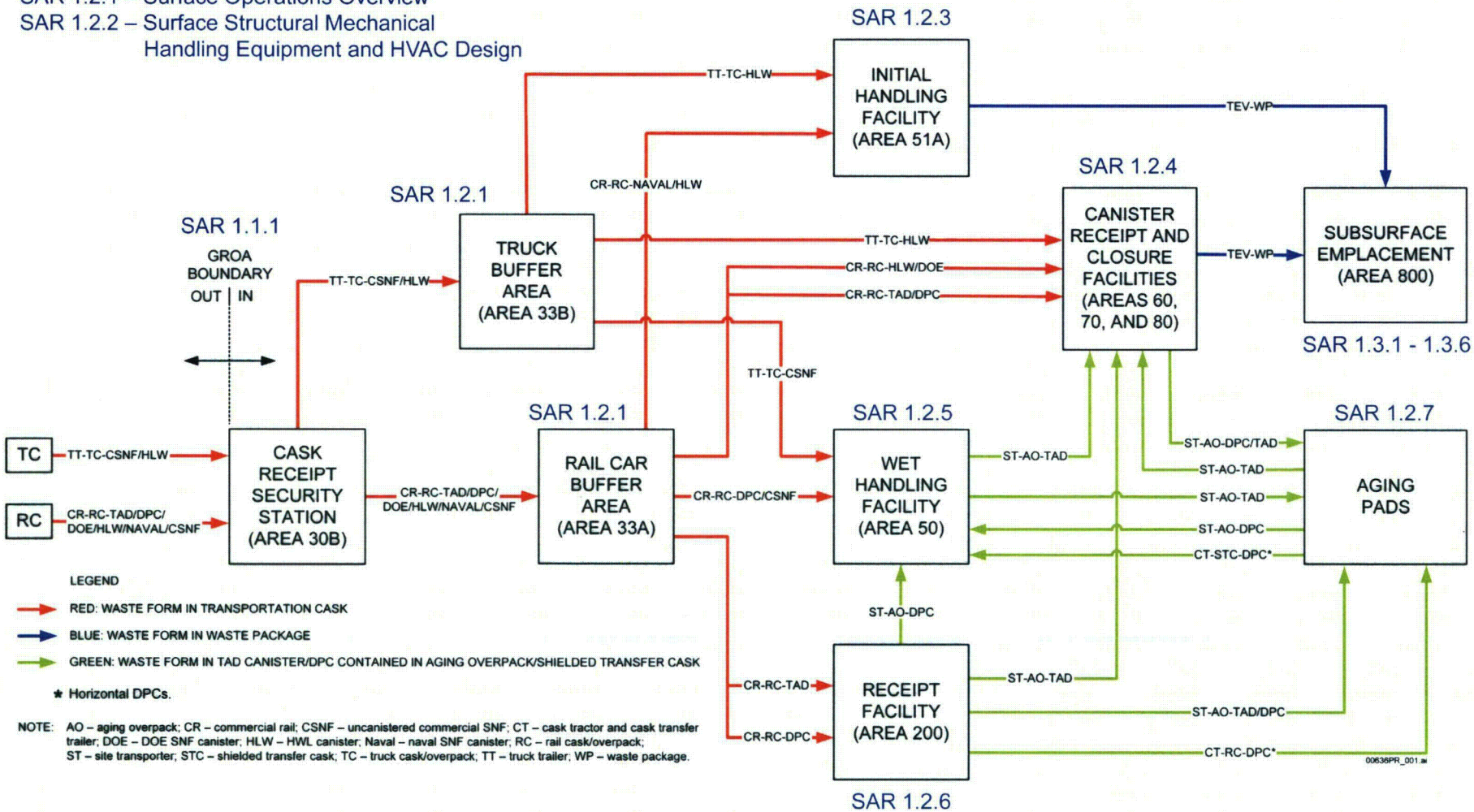

SAR Figure 1.2.1-3 Modified to include SAR sections

Waste Handling Surface Facilities

- Waste handling facilities
  - Initial Handling Facility (SAR 1.2.3)
  - Canister Receipt and Closure Facility (SAR 1.2.4)
  - Wet Handling Facility (SAR 1.2.5)
  - Receipt Facility (SAR 1.2.6)
  - Aging Facility (SAR 1.2.7)
- Waste handling equipment generally common to multiple facilities (SAR 1.2.4)

Cask Transfer Trolley

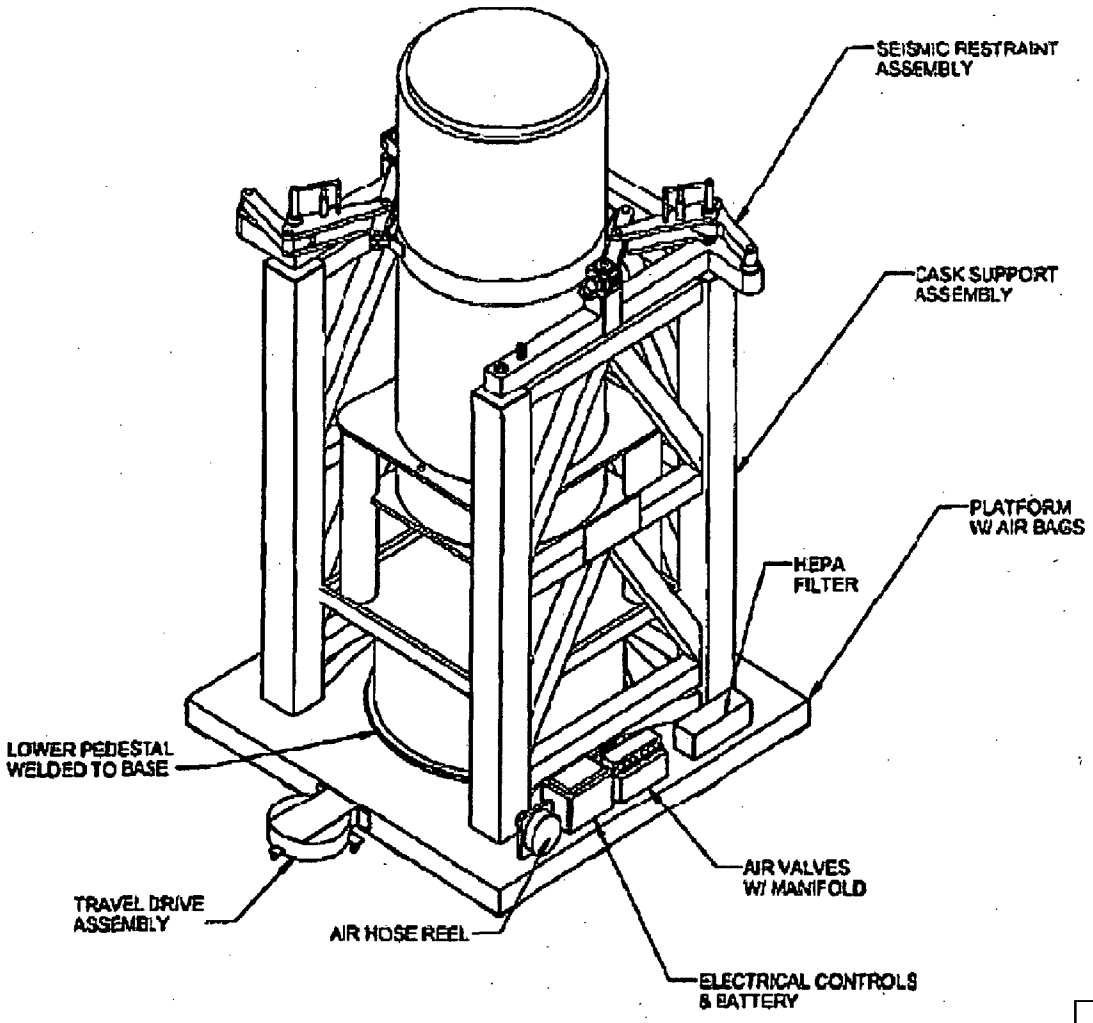

Taken from SAR Figure 1.2.4-26

SAR 1.2.4

Canister Transfer Machine

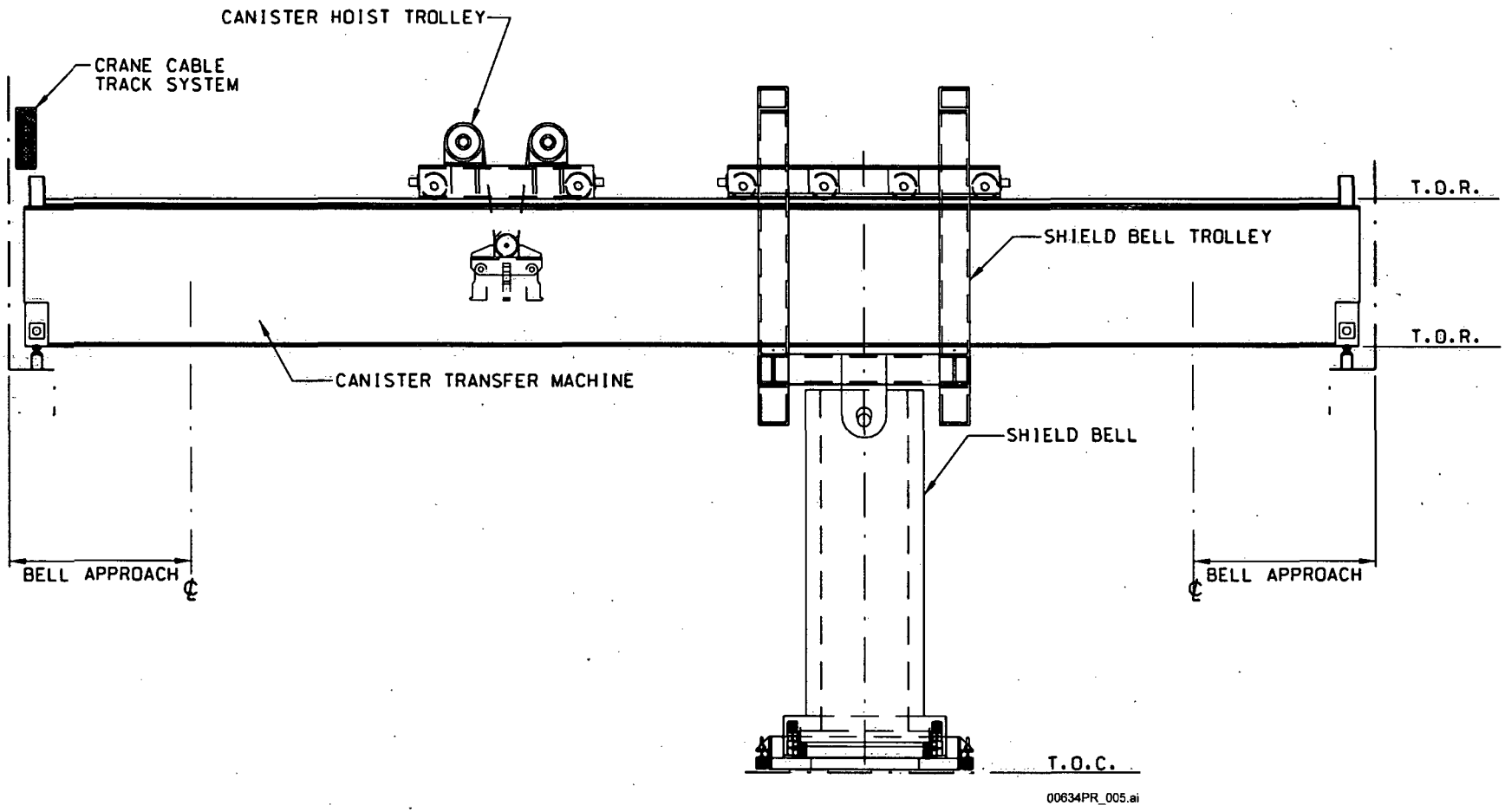

Taken from SAR Figure 1.2.4-50

SAR 1.2.4

Waste Package Transfer Trolley

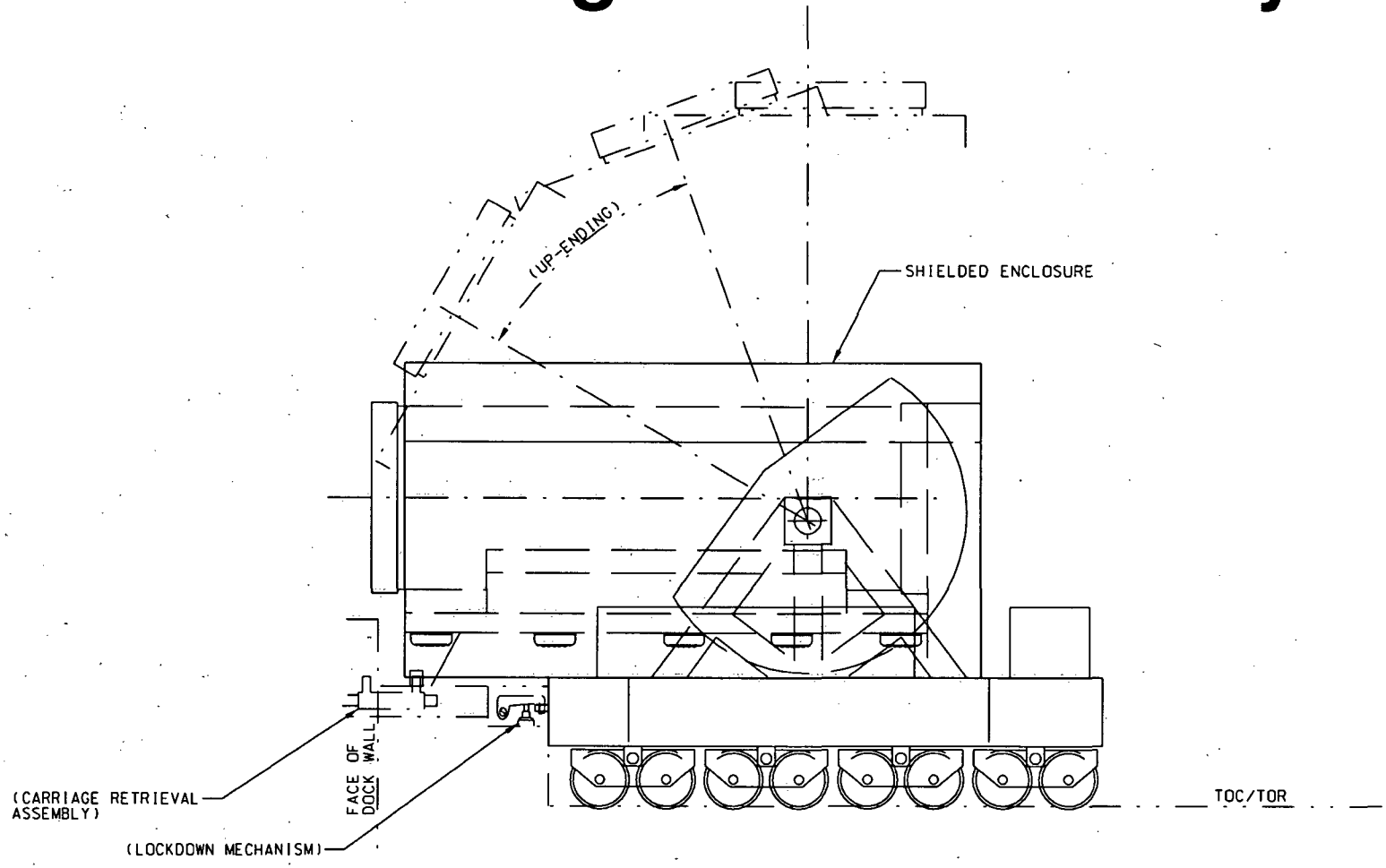

SAR 1.2.4

Taken from SAR Figure 1.2.4-88

HORIZONTAL POSITION
00634PR_006.ai

Support Facilities

Facility	SAR
Emergency Diesel Generator Facility	1.2.8 and 1.4.1
Security Facilities	1.2.8
Central Control Center Facility	1.2.8 and 1.4.2
Low-Level Waste Facility	1.2.8 and 1.4.5
Warehouse and Non-Nuclear Receipt Facility	1.2.8
Facilities for Utilities	1.2.8
Standby Diesel Generator Facility	1.2.8 and 1.4.1
Heavy Equipment Maintenance Facility	1.2.8
Railcar Buffer Area	1.2.8
Truck Buffer Area	1.2.8
Diesel Fuel Oil Storage	1.2.8 and 1.4.4
Cooling Tower	1.4.4

Subsurface Facility

- Facility consists of access mains, exhaust mains, and 108 emplacement drifts in four panels constructed in phases
  - Construction and emplacement areas separated by pairs of isolation barriers
  - Isolation barrier consists of bulkhead with airlock and alarmed security boundary
  - Isolation barriers are modular and are moved as additional emplacement drifts are completed

SAR 1.3

Subsurface Facility Layout

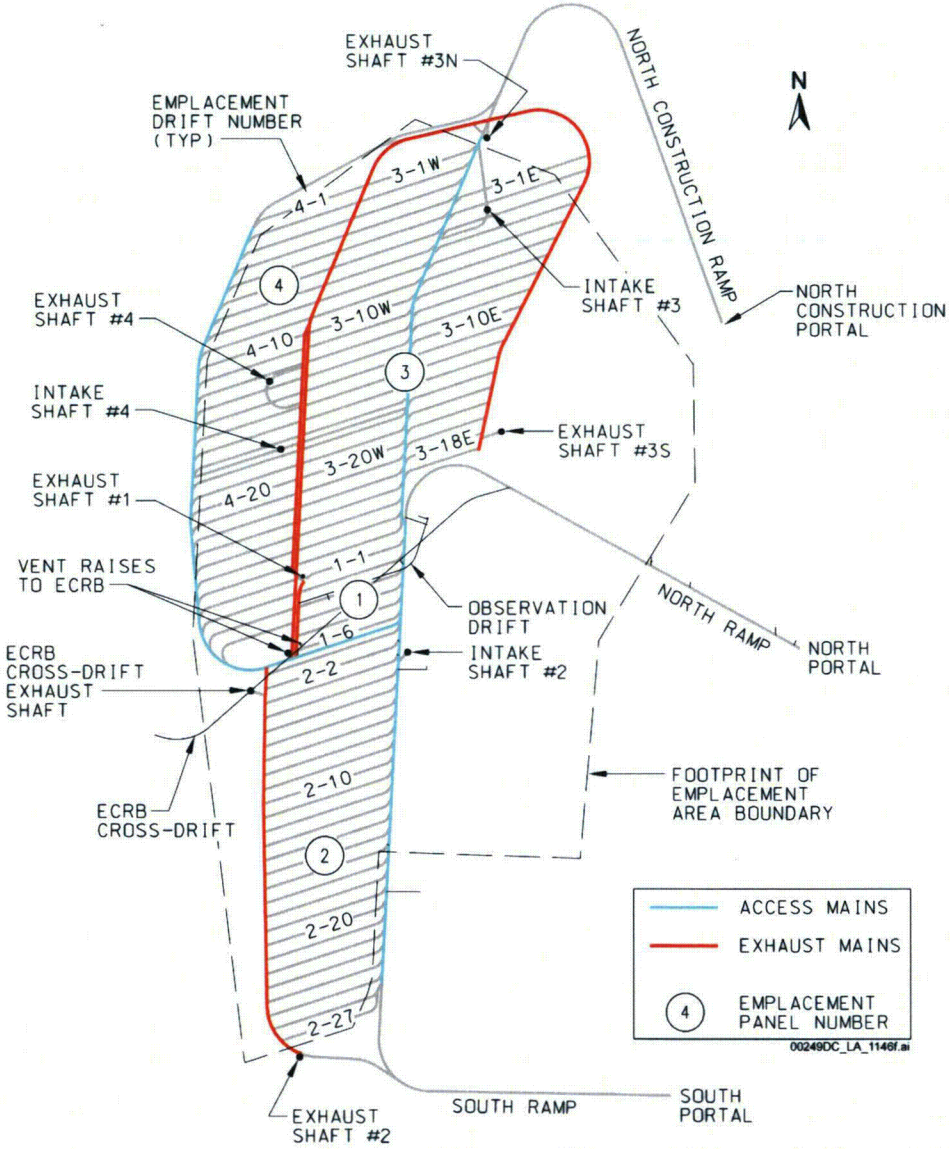

SAR 1.3.1

SAR Figure 1.3.1-1

Subsurface Emplacement

- Emplacement is conducted through North Portal, adjacent to surface facilities
- Transport and emplacement vehicle (TEV) accepts waste package at Canister Receipt and Closure Facilities or Initial Handling Facility
- TEV moves waste package to North Portal, into subsurface and places waste package into emplacement drift

SAR 1.3.4

Transport and Emplacement Vehicle

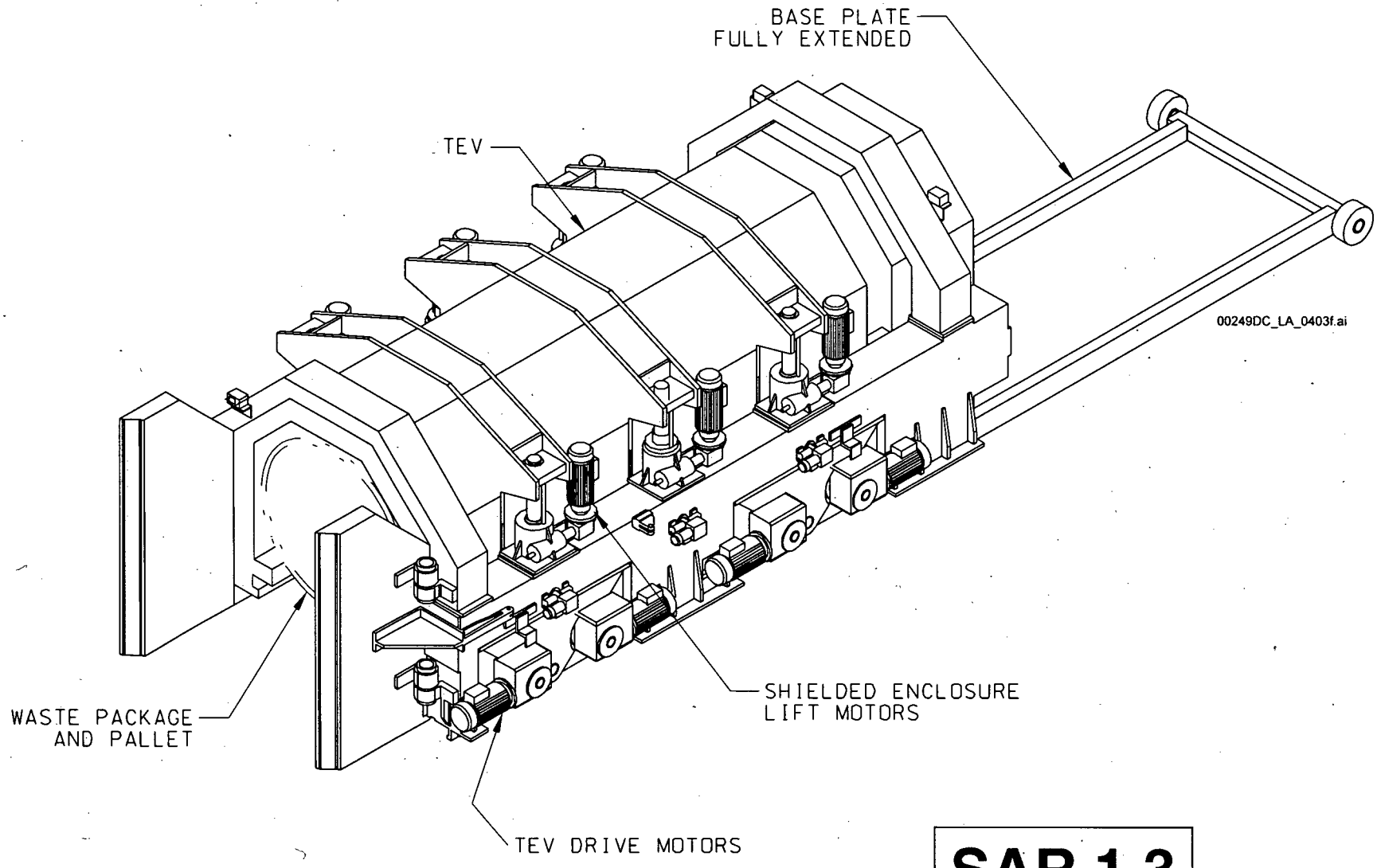

Taken from SAR Figure 1.3.3-39

SAR 1.3

Phased Construction

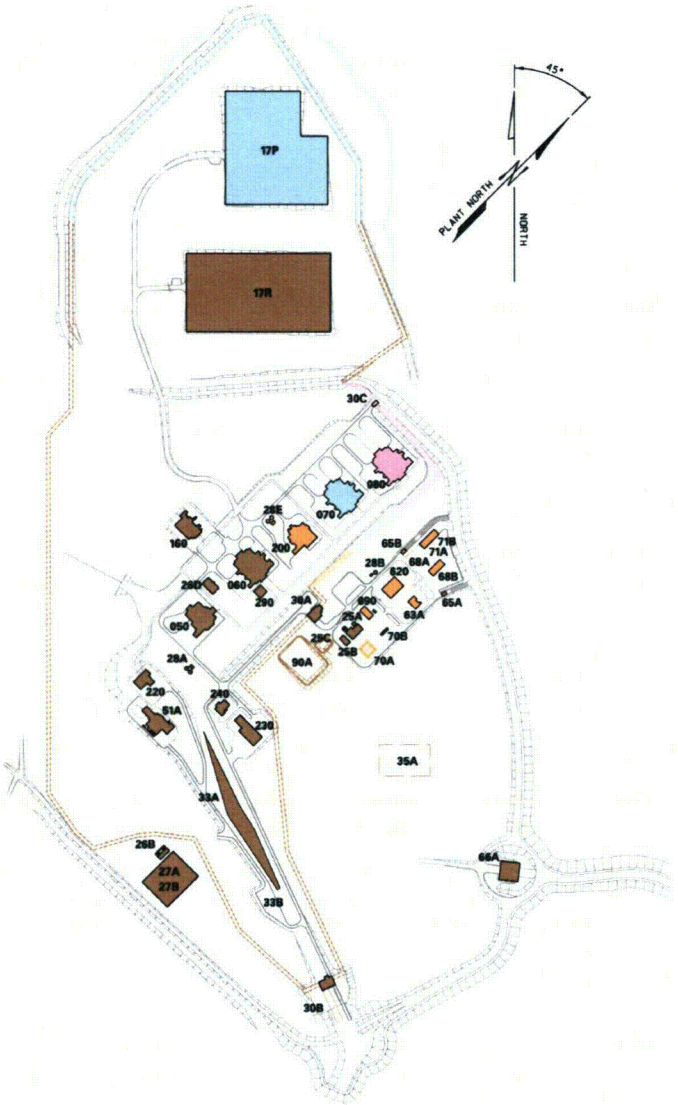

GI Figure 2.2

LEGEND			
Initial Operating Capability			
Phase 1			
050	Wet Handling Facility	26D	Emergency Diesel Generator Facility
060	Canister Receipt and Closure Facility 1	27A	Switchyard (138kV)
51A	Initial Handling Facility	27B	13.8kV Switchgear Facility
17R	Aging Pad R	28A	Fire Water Facility
160	Low-Level Waste Facility	28B	Fire Water Facility
220	Heavy Equipment Maintenance Facility	30A	Central Security Station
230	Warehouse and Non-Nuclear Receipt Facility	30B	Cask Receipt Security Station
240	Central Control Center Facility	33A	Rail Car Buffer Area
25A	Utility Facility	33B	Truck Buffer Area
25B	Cooling Tower	35A	Septic Tank and Leach Field
25C	Evaporation Pond	66A	Helicopter Pad
26B	Standby Diesel Generator Facility	290	Aging Overpack Staging Facility
90A	Storm Water Retention Pond		
Full Operating Capability			
Phase 2			
200	Receipt Facility	68B	Materials/Yard Storage
28E	Fire Water Facility	690	Vehicle Maintenance and Motor Pool
620	Administration Facility	70A	Diesel Fuel Oil Storage
63A	Fire, Rescue and Medical Facility	70B	Fueling Stations
65A	Administration Security Station	71A	Craft Shops
65B	Administration Security Station	71B	Equipment/Yard Storage
68A	Warehouse/Central Receiving		
Phase 3			
070	Canister Receipt and Closure Facility 2	17P	Aging Pad P
Phase 4			
080	Canister Receipt and Closure Facility 3	30C	North Perimeter Security Station

00634PR_003.ai

GI-2 and SAR 1.2.1

Retrieval

- Repository design maintains capability to retrieve emplaced waste
- Accomplished by maintaining systems such that reverse of emplacement can occur
- Recovery of individual waste packages may be accomplished under repository license
- License amendment required for retrieval

SAR 1.11

Repository Closure

- License amendment required for repository closure
- Repository closed by backfilling access mains and ventilation shafts
- Decontamination and dismantlement of surface facilities at or before closure
- Monuments erected to alert future visitors

SAR 1.3.6, 1.12, and 5.8

Conclusion

- Sufficient design information provided to support PCSA and TSPA
- Specific design information provided to demonstrate ability of ITS SSCs to perform intended safety function with reliability specified within PCSA
- Integration presentations discuss how integration between design and preclosure and postclosure safety analyses are accomplished
- Design presentations discuss level of design detail provided, integration with PCSA results, and relationship with 10 CFR 63.21(c) requirements
- PCSA presentation discusses generation of PCSA results and incorporation of those results into design

U.S. Department of Energy
Office of Civilian Radioactive Waste Management

www.ocrwm.doe.gov

Integration of Design and Preclosure Safety Analysis

Presented to:
U.S. Nuclear Regulatory Commission

Presented by:
Paul Harrington
Director, Office of the Chief Engineer
Office of Civilian Radioactive Waste Management
U.S. Department of Energy

June 19, 2008
Rockville, Maryland

Presentation Outline

- Overview
- Integration roadmap of repository design – Preclosure Safety Analysis (PCSA) in Safety Analysis Report (SAR)
- Repository design – PCSA integration in SAR text and tables
- Conclusion

Overview

- Repository structures, systems, and components (SSCs) are designed to meet their mission objectives and are constrained by design criteria
- Design information focused on supporting design bases, design criteria, estimates of reliability within PCSA, and roles in meeting regulatory performance objectives

Overview (continued)

- Design criteria developed from design bases of SSCs identified by PCSA
  - Design and safety analysis philosophy minimizes Category 1 and Category 2 event sequences
  - Design preceded initial PCSA
    - Identified hazards and initiating events – SAR 1.6
    - Analyzed event sequences – SAR 1.7
    - Addressed potential consequences – SAR 1.8 and 1.14
    - Identified safety classification, design bases, and procedural safety controls – SAR 1.9
  - Iterated design - results presented in SAR 1.2 through 1.5

Design – PCSA Integration Roadmap

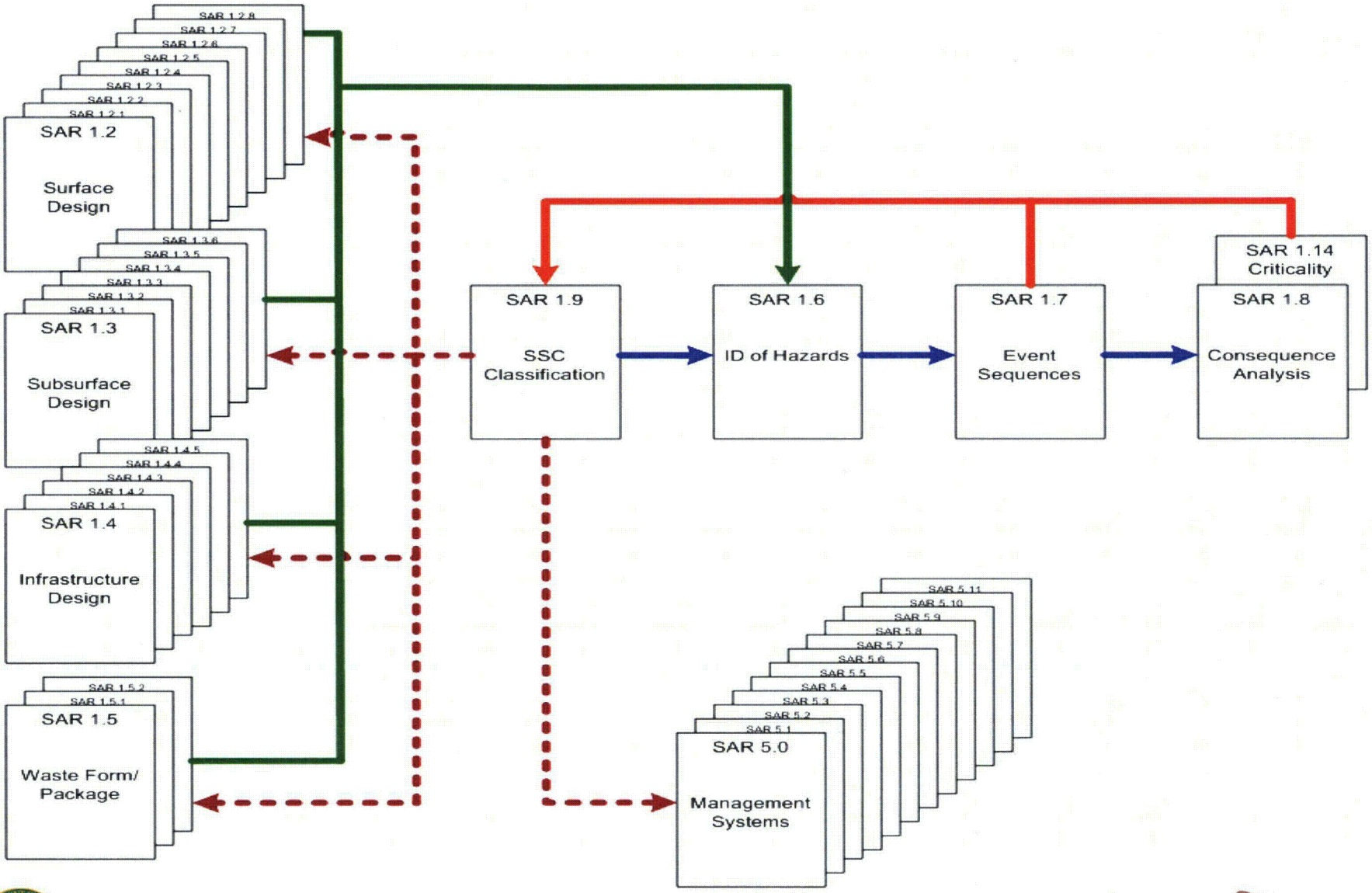

Preclosure Safety Analysis

- Iterative process with design
- Risk-informed, performance-based analysis
- Results identify
  - Classification of SSCs
  - Design bases of important to safety (ITS) SSCs
  - Procedural safety controls

SAR 1.9 SSC Classification

- Identifies preclosure safety classification of SSCs (Table 1.9-1)
- Identifies preclosure safety functions and design bases
- Maps preclosure safety functions and design basis for ITS SSCs to design sections containing design criteria that ensure design basis requirements have been met (Tables 1.9-2 through 1.9-7)

Table 1.9-1. Preclosure Safety Classification of SSCs (Continued)

System or Facility	Subsystem or Function (as Applicable)	Component	Preclosure Safety Classification
Mechanical	Waste Transfer/Fuel	Spent Fuel Transfer Machine (WHF: 050-HTF0-FHM-00001)	ITS

Table 1.9-7. Preclosure Nuclear Safety Design Bases for the Subsurface Operations ITS SSCs

System or Facility (System Code)	Subsystem or Function (As Applicable)	Component	Nuclear Safety Design Bases		Representative Event Sequence (Sequence Number)	LA Section Presenting Design Criteria
			Safety Function	Controlling Parameters and Values		
DOE and	DO			DS SS 01 The	ESD03-WP (Seq. 6-3)	Table 1.5.2-

00633PR_191+197_layout.psd

SAR 1.9 SSC Classification (Continued)

- **Identifies preclosure procedural safety controls (Table 1.9-10)**
- **Maps preclosure procedural safety controls to design and management systems sections (Table 1.9-10)**

Table 1.9-10. Preclosure Procedural Safety Controls

Item	Facility/ Operations Area	SSC	Procedural Safety Controls	Basis	LA Section Describing Implementation
PSC-1	IHF, CRCF, RF, WHF	Cask transfer trolley	The cask transfer trolley is deflated during loading of cask onto trolley, cask preparation activities, and during canister unloading or loading activities.	This control limits the probability of spurious movement of the cask transfer trolley and resulting canister impact.	1.2.3.2.1.4 1.2.4.2.1.4 1.2.5.2.1.4 1.2.6.2.1.4

00633PR_1910_layout.psd

SAR 1.2 Surface Facilities and Operations

- **Identifies preclosure procedural safety controls (Table 1.2.1-3 and multiple subsections in SAR 1.2.3, 1.2.4, 1.2.5, 1.2.6, and 1.2.8)**
- **Identifies preclosure nuclear safety design bases and their relationship to design criteria (Tables 1.2.3-3, 1.2.4-4, 1.2.5-3, 1.2.6-3, 1.2.7-1, and 1.2.8-2)**

1.2.4.2.2.4 Procedural Safety Controls to Prevent Event Sequences or Mitigate Their Effects

The preclosure safety analysis identifies two procedural safety controls related to the operation of components in the canister transfer subsystem of the CRCF. Table 1.9-10 identifies the unique numbering of the preclosure procedural safety controls, as well as the associated facility or

Table 1.2.4-4. Preclosure Nuclear Safety Design Bases and their Relationship to Design Criteria for the CRCF

System or Facility (System Code)	Subsystem or Function (as Applicable)	Component	Nuclear Safety Design Bases		Design Criteria
			Safety Function	Controlling Parameters and Values	
Canister Receipt and Closure Facility (CR)	Canister Receipt and Clos	Structure	Maintain building structural integrity	CR.01. The mean frequency of building collapse due to wi	Structure is required to be designed to meet the wind and ash ribed in Table 1.2.2-1.

00633PR_124214_1244_layout.psd

SAR 1.2 through SAR 1.5

- Design bases, design criteria, and procedural safety controls identified in similar manner as SAR 1.2
- Design criteria and implementation in design further described in text of SAR 1.2 through 1.5

SAR 1.6 Identification of Hazards

- **Identifies hazards and potential initiating events that could affect safe operation of Yucca Mountain facilities (Tables 1.6-2 and 1.6-3)**

Table 1.6-3. Internal Initiating Events

Facility	Initiating Event Description
Wet Handling Facility	Cask handling crane drops object onto cask—2

00634PR_16-3_layout.psd

SAR 1.7 Event Sequence Analysis

- **Categorizes event sequences by facility resulting from initiating event (Tables 1.7-7 through 1.7-18)**

Table 1.7-11. List of Event Sequences of the Canister Receipt and Closure Facility Initiated by an Internal Event

Event Sequence Identifier	End State	Description	Material At Risk	Mean[a]	Median[a]	Standard Deviation[a]	Event Sequence Categorization	Basis for Categorization	Consequence Analysis[b]
ESD18-DSTD-SEQ2	Direct exposure, loss of shielding	This event sequence represents a temporary loss of shielding during CTM operations, while a DOE standardized canister is being transferred. In this sequence there are no pivotal events.	1 DOE standardized canister	3×10^{-1}	3×10^{-1}	1×10^{-1}	Category 2	Mean of distribution for number of occurrences of event sequence near a category threshold. Categorization confirmed by alternative distribution	NA[c]

00634PR_17-11_layout.psd

Dose Consequences and Criticality

- **SAR 1.8 – analyzes dose consequences for 14 bounding Category 2 event sequences**
- **SAR 1.14 – addresses potential criticality resulting from Category 2 event sequences**

Table 1.8-30. Potential Offsite Public Doses in General Environment for Bounding Category 2 Event Sequences

Event Sequence No.	Bounding Category 2 Event Sequence	Total Effective Dose Equivalent (rem)	Highest Total Organ Dose Equivalent (rem)	Shallow Dose Equivalent to Skin (rem)	Lens Dose Equivalent (rem)
2-01	Seismic event resulting in Low-Level Waste Facility collapse and failure of HEPA filters [illegible]	0.01	0.09 (bone surface)	<0.01	0.02

00634PR_18-30_layout.psd

SAR 5 Management Systems

- **EXAMPLES**
  - Airspace restrictions to support aircraft hazards analyses – SAR 5.8
  - Radiological Protection Program including controls for minimizing exposure – SAR 5.11
  - Quality Assurance Program contributing to equipment reliability – SAR 5.1
  - Training program and procedures contributing to human reliability – SAR 5.3
  - License Specifications restricting waste form properties – SAR 5.10

Key References

- ***Preclosure Nuclear Safety Design Bases***
- ***Preclosure Procedural Safety Controls***
- ***Basis of Design for the TAD Canister-Based Repository Design Concept***

Conclusion

- Description of repository design presented in SAR 1.2 through 1.5
- PCSA performed on repository design identified hazards, initiating events, event sequences, dose consequences and potential criticality in SAR 1.6, 1.7, 1.8, and 1.14 to determine design basis for ITS SSCs
- ITS SSCs and procedural safety controls identified in SAR 1.9
- Design criteria developed using design bases identified in SAR 1.9
- There is close integration between design and PCSA

U.S. Department of Energy
Office of Civilian Radioactive Waste Management

www.ocrwm.doe.gov

Integration of Design and Postclosure Performance Assessment

Presented to:
U.S. Nuclear Regulatory Commission

Presented by:
Robert Andrews
Science Interface Manager
Bechtel SAIC Company, LLC

June 19, 2008
Rockville, Maryland

Presentation Outline

- Overview
- Integration roadmap of repository design – performance assessment (PA) in Safety Analysis Report (SAR)
- Repository design – PA integration tables in SAR
- Example roadmap
- Key references
- Conclusions

Overview

- Repository design structures, systems, and components (SSCs) presented in SAR Chapter 1 (SAR 1.2, 1.3, and 1.5) constrained by analyzed PA bases through design control parameters (SAR 1.9)
- Design control parameters related to postclosure functions of SSCs and support
  - exclusion of features, events and processes (FEPs) (SAR 2.2) or
  - boundary-initial conditions for models of included FEPs (SAR 2.3)
- Abstraction models (SAR 2.3) used as bases for total system performance assessment (TSPA) (SAR 2.4) and barrier capability analyses (SAR 2.1)
- Repository design controlled to meet constraints identified by performance assessment (SAR 1.9 and 5.10)

Design – Performance Assessment Integration Roadmap

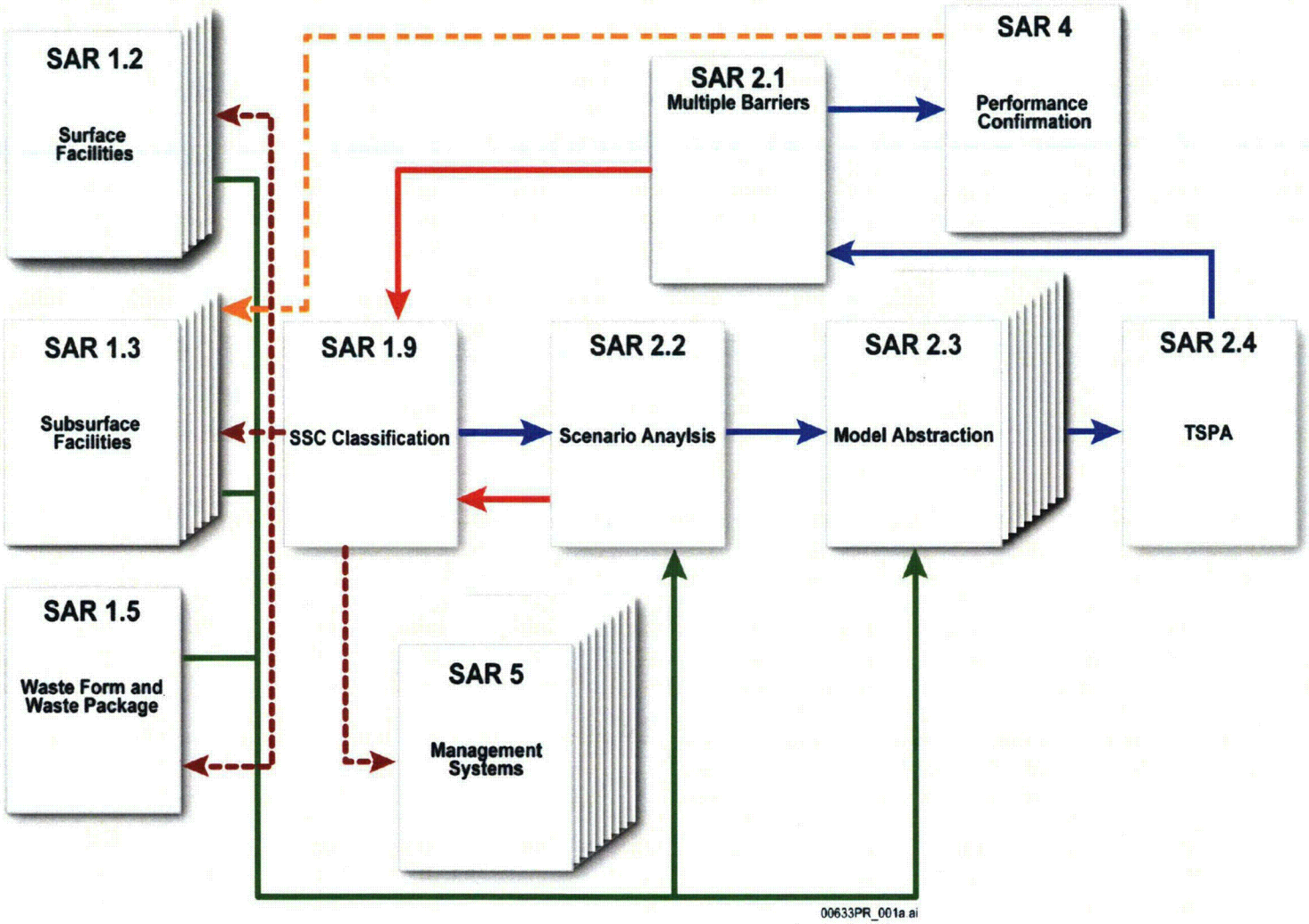

SAR 1.9 SSC Classification

- Identifies important to waste isolation (ITWI) barrier (or feature or SSC) (Table 1.9-8)
- Identifies non-ITWI features/SSCs (Table 1.9-8)
- Identifies postclosure-relevant design control parameters for ITWI features (Table 1.9-8)
  - Additional canister-related control parameters identified in transportation, aging, and disposal (TAD) canister performance specification and DOE interface documents

Table 1.9-8. ITWI Classification of Features that Support the Three Barriers

Barrier	Feature[a]	SSC	Safety Classification[b]	Barrier Function	Relevant Design Control Parameter[c]
UNB	Topography and surficial soils	NA	ITWI	Prevents or substantially reduces the rate of movement of water	09-04 Reclamation of Lands Disturbed by Repository

00633PR_19_layout_a.psd

SAR 1.9 SSC Classification (Continued)

- Identifies design control parameters and values or constraints (Table 1.9-9)
- Identifies approach to control parameter (Table 1.9-9)
- Maps where control parameter used as bases for design criteria/configuration (Table 1.9-9)

Table 1.9-9. Postclosure Analyses Control Parameters

Feature or Structure, System, or Component	Design Control Parameter	Control Parameter Values, Ranges of Values, or Constraints	Relevant to ITWI Classification (Table 1.9-8)	Approach to Control (1 = Procedural Safety Control 2 = Design Configuration Control)	Design Safety Analysis Report Section Using Control Parameter
Subsurface Facilities	01-01 Repository geographic	The location of the subsurface facilities of the repository within the footprint of the emplacement area boundary	No	2	See Table 1.3.4-5

00633PR_19_layout.psd

SAR 2.2 Scenario Analysis and Event Probability

- Identifies representative FEPs using design control parameters (Table 2.2-3)
- Identifies FEPs excluded from TSPA in part on basis of design control parameters (Table 2.2-3)
- Maps where representative FEPs discussed in postclosure SAR Sections (Table 2.2-3)

Table 2.2-3. Repository Design Use in Performance Assessment

Control Parameter	Representative FEPs Using Design/ Control Parameter	Control Parameter Use in Performance Assessment	Postclosure SAR Sections Discussing Representative FEPs
01-01 Repository Geographic and Geologic Location	FEP 0.1.03.00.0A – Spatial domain of concern FEP 1.1.01.01.0A – Open site investigation boreholes (Excluded)	Supports spatial domain of concern and boundary conditions for various mountain scale, repository scale,	Section 2.2 Section 2.3.2 Section 2.3.5

00633PR_22_layout.psd

SAR 1.2 Surface Facility

- **Identifies procedural safety controls related to postclosure control parameters (Table 1.2.1-2)**
- **Identifies waste package fabrication specifications and operating procedures to meet postclosure control parameter constraints**

Table 1.2.1-2. Postclosure Procedural Safety Controls for Intrasite and Non-Facility Specific Controlling Parameters

Structure, System and Component	Postclosure Control Parameter		Relevant to ITWI	Design Criteria/Configuration[a]	Postclosure Procedural Safety Control[b]
	Parameter Number and Title	Values, Ranges of Values or Constraints			
Waste Package	03-20 Materials Contacting the Waste Package	After fabrication final cleaning, the waste package shall be prepared for shipment. Materials or objects	No	The fabrication specification for the waste package will contain requirements to	The waste package storage, preparation, canister transfer, closure, loadout and emplacement procedures will be developed

00633PR_12_layout.psd

SAR 1.3 Subsurface Facility

- Maps design criteria/configuration related to postclosure control parameters (Tables 1.3.1-4, 1.3.3-8, 1.3.4-5, 1.3.5-4, and 1.3.6-3)
- Identifies applicable procedural safety controls related to postclosure control parameters
- Describes dimensions, material properties and configuration of emplacement drifts, inverts, emplacement pallets, drip shields and committed materials used in PA
- Describes design features used to determine initial and boundary conditions for PA
- Describes thermal management approach and range of design thermal loadings used in PA (SAR 1.3.1.2.5)

Table 1.3.6-3. Summary of Conformance of Subsurface Facility Design to Postclosure Control Parameters—Repository Closure

Structure, System and Component	Postclosure Control Parameter		Relevant to ITWI	Design Criteria/Configuration	Postclosure Procedural Safety Control
	Parameter Number and Title	Values, Ranges of Values or Constraints			
Subsurface Facility - Closure	02-03 Committed Materials	During construction of the emplacement drifts, and operation and closure of the repository, administrative controls will be	No	Part (a)—The design includes estimates of the materials used in the emplacement	Parts (b), (c), and (e)—Procedures will be developed to control and evaluate materials not already controlled by the

00633PR_13_layout.psd

SAR 1.5 Waste Form and Waste Package

- Maps design criteria/configuration related to postclosure control parameters (Tables 1.5.1-8 and 1.5.2-7)
- Identifies applicable procedural safety controls related to postclosure control parameters
- Describes dimensions, material properties and configuration of waste forms, TAD canisters and other canisters and waste packages used in PA
- Describes design features used to determine initial and boundary conditions for PA

Table 1.5.2-7. Summary of Conformance of Waste Package Design to Postclosure Control Parameters

Structure, System and Component	Postclosure Control Parameter		Relevant to ITWI	Design Criteria/Configuration	Postclosure Procedural Safety Control
	Parameter Number and Title	Values, Ranges of Values or Constraints			
Waste Package	03-01 Waste Package	The waste package dimensions and component	No	The waste package dimensions and component masses for a commercial SNF waste package are specified in	NA

00633PR_15_layout.psd

SAR 2.3 Model Abstraction

- Maps where FEPs included in models (Tables 2.3.1-1, 2.3.2-1, 2.3.3-1, 2.3.4-1, 2.3.5-1, 2.3.5-2, 2.3.5-3, 2.3.6-2, 2.3.7-1, 2.3.8-1, 2.3.9-1, 2.3.10-1, 2.3.11-1)
- Uses design features, characteristics and configuration to define spatial domain of interest and initial/boundary conditions
- Assesses anticipated response to range of design thermal loadings (SAR 2.3.5.4.3)

Table 2.3.4-1. Seismic-Related Features, Events, and Processes for the Total System Performance Assessment

FEP Number and FEP Name	FEP Description	Summary of Technical Basis/Approach for FEP Inclusion
1.2.02.03.0A Fault displacement damages EBS components	Movement of a fault that intersects drifts within the repository may cause the EBS components to experience related movement or displacement. Repository performance may be degraded by such occurrences as the tilting of ... nt contact,	An analysis is performed that examines how fault displacement may contribute to mechanical disruption of the EBS. In this analysis, estimates of very low probability fault displacement (Section 2.3.4.5.5) are compared with the dimensions of the EBS features. Potential damage to the EBS is estimated, and the results are used to create an abstraction for TSPA.

00633PR_234_layout.psd

SAR 2.1 System Description and Demonstration of Multiple Barriers

- **Identifies barriers and barrier features that are ITWI (Table 2.1-1)**
- **Identifies FEPs that are important to capability of barrier feature (Tables 2.1-2 through 2.1-4)**

Table 2.1-1. ITWI Features / Components Supporting Each of the Three Barriers

Barrier	Feature[a]	Barrier Function[b]	Safety Classification[c]
UNB	Topography and Surficial Soils	Prevents or substantially reduces the rate of movement of water	ITWI
UNB	Unsaturated Zone above the	Prevents or substantially reduces the rate of movement of wa	ITWI

Table 2.1-3. Summary of Features, Events, and Processes Affecting the Capability of the Engineered Barrier System

Barrier Feature	FEP Number, FEP Name, and Screening Decision (Section 2.2, Table 2.2-5)	Processes and Characteristics that are Important to the Capability of the Barrier
Emplacement Drift	1.1.01.01.0A – Open site investigation boreholes – Excluded	
	Chemical effects of excavation and construction	

00633PR_21_1+21_3_layout.psd

SAR 4 Performance Confirmation Program

- **Identifies performance confirmation activities and relationship to natural and engineered barriers**
- **Identifies design provisions for subsurface facility to support performance confirmation activities**
  - **Test and observation drifts**
  - **Seepage alcoves**

Table 4-1. Performance Confirmation Activity Relationships to Performance Assessment Parameters, Purpose, Barrier, or Event

Type of Monitoring and Testing	Candidate Activity	Activity Description	Candidate Parameters	Purpose	Barrier or Event	SAR Section
General Requirements Testing and Monitoring	Precipitation monitoring[a]	Monitoring of precipitation and composition analysis	Precipitation (rate and/or quantity), precipitation chemical composition	To evaluate the precipitation input parameter that relates to seepage modeling	Upper Natural Barrier	4.2.1.1

00633PR_41_layout.psd

SAR 5 Management Systems

- **Identifies management systems necessary to design, construct, and operate repository within design bases**
- **Identifies probable subjects of license specifications to be incorporated as**
  - **Limiting conditions for operation (Table 5.10-1)**
  - **Design features (Table 5.10-2)**
  - **Administrative controls (Table 5.10-3)**

Table 5.10-2. Probable Subjects of License Specifications to be Incorporated as Design Features

Probable Design Features	Bases for Selection
Repository Location—This design feature will specify the geographic location of the geologic repository, GROA, and associated site boundaries.	Specifying the geographic location and boundaries will ensure that the location of the surface GROA is consistent with the bases for the PCSA and TSPA.
Geologic Constraints—This design feature will establish constraints on the location of the emplacement drifts relative to geologic features (e.g., depth above groundwater, minimum overburden).	Specifying the geologic constraints will ensure that the location of the emplacement drifts is consistent with the TSPA. The constraints on the location of emplacement areas are described in Section 1.3.2.2.1.
Aging Pads—This design feature will describe the location [illegible] aging pads.	The location, size, and capacity of the aging pads are fundamental features [illegible] that are expected [illegible] GROA

00633PR_510_2_layout.psd

Example Roadmap

Design Control Parameter 05-03 - Waste Package Thermal Limits

SAR Section/Table	Map	Relevant Waste Package Thermal Limits Information
Table 1.9-9 Postclosure Analyses Control Parameters	Table 1.3.1-4	Identifies Design Control Parameter 05-03 – Waste Package Thermal Limits as requiring a procedural safety control
Table 2.2-3 Repository Design Use in Performance Assessment	Section 2.2 Section 2.3.5	Identifies representative FEPs using Design Control Parameter 05-03 – Waste Package Thermal Limits, such as included FEP 2.1.08.03.0A – Repository dry-out due to waste heat and excluded FEP 2.1.11.06.0A – Thermal sensitization of waste packages
Table 1.3.1-4 Summary of Conformance of Subsurface Facility Design to Postclosure Control Parameters	Table 1.3.1-2 Section 1.3.1.2.5 Section 1.3.2.4.5.2	Identifies background design criteria/ configuration and procedural safety control related to Design Control Parameter 05-03 – Waste Package Thermal Limits
Table 1.3.1-2 Repository Subsurface Facility Temperature Limits	NA	Identifies thermal limits
Section 1.3.1.2.5 Thermal Management	Section 2.3.5.4.3	Identifies methodology for developing waste package loading plans that ensures conformance with repository thermal limits.
Section 1.3.2.4.5.2 Ventilation - Thermal	NA	Identifies ventilation system design bases related to identified thermal limits
Section 2.2 Scenario Analysis and Event Probability	Table 2.2-5	Provides FEP screening decisions
Table 2.2-5 Complete Listing of FEPs Considered	NA	Provides basis for excluding FEP 2.1.11.06.0A – Thermal sensitization of waste packages and applicable model abstraction for included FEP 2.1.08.03.0A – Repository dry-out due to waste heat
Section 2.3.5 In-Drift Physical and Chemical Environment	Table 2.3.5-2	Summarizes data and data uncertainty, parameter and parameter uncertainty and model and model uncertainty associated with in-drift physical and chemical processes and presents abstraction of results for use in TSPA
Table 2.3.5-2 Features, Events, and Processes Relevant to the In-Drift Thermal-Hydrologic Models and Included into TSPA	Section 2.3.5.4.1	Summarizes technical basis/approach for inclusion of FEP 2.1.08.03.0A – Repository dry-out due to waste heat in the TSPA
Section 2.3.5.4.1 Multiscale Thermal-Hydrologic Models	NA	Summarizes data and data uncertainty, parameter and parameter uncertainty and model and model uncertainty associated with drift-scale thermal-hydrologic processes
Section 2.3.5.4.3 Near-Field Response to the Range of Design Thermal Loadings	NA	Summarizes analyses of hydrogeologic, geomechanical and geochemical responses to the anticipated range of thermal loadings. Commits to analyzing each repository drift before emplacement once characteristics of waste forms to be emplaced are known
Table 5.10-3 Probable Subjects of License Specifications to be Incorporated as Administrative Controls	Section 1.3.1.2.5	Identifies waste package loading, handling, and emplacement program including waste package thermal loading limits

Key References

- *Postclosure Nuclear Safety Design Bases*
- *Postclosure Modeling and Analyses Design Parameters*
- *Basis of Design for the TAD Canister-Based Repository Design Concept*
- *Transportation, Aging and Disposal Canister System Performance Specification*
- *Postclosure Analysis of the Range of Design Thermal Loadings*
- *Features, Events, and Processes for the Total System Performance Assessment: Analyses*

Conclusion - Relationship of Repository Design Bases to Postclosure Performance Objectives

- Description of repository design discussed in SAR 1.3 and 1.5 (e.g. dimensions, material properties, specifications)
- Design bases developed using (1) design control parameters identified in SAR 1.9 and (2) functions and use identified in SAR 2.2
- PA uses repository design information and Yucca Mountain site data to support exclusion of FEPs as described in SAR 2.2 and to define parameters and conceptual models as presented in SAR 2.3
- Ability of design, working in combination with natural barriers, to meet postclosure performance objectives described in SAR 2.4
- Design features of engineered barrier system considered barriers important to waste isolation identified in SAR 2.1
- Design parameters controlled by configuration management and/or procedural safety controls identified in SAR 1.9

U.S. Department of Energy
Office of Civilian Radioactive Waste Management

www.ocrwm.doe.gov

Surface Facilities

Presented to:
U.S. Nuclear Regulatory Commission

Presented by:
John Donnell
Licensing
GTSS

June 19, 2008
Rockville, Maryland

License Application Surface Design

- Six Summary and Generic Design sections
  - SAR 1.1 - Site Description as it Pertains to Preclosure Safety Analysis
  - SAR 1.2.1 - Surface Operations Overview
  - SAR 1.2.2 - Surface Facilities Structural, Mechanical Handling Equipment, and Heating Ventilation and Air-Conditioning System Design
  - SAR 1.10 - Meeting the As Low As is Reasonably Achievable Requirements for Normal Operations and Category 1 Event Sequences
  - SAR 1.12 - Plans for Permanent Closure, Decontamination, and Dismantlement of Surface Facilities
  - SAR 1.13 - Equipment Qualification Program
- Eleven Facility and System sections
  - SAR 1.2.3 through SAR 1.2.6 - Waste Handling Facilities and Contained Systems
  - SAR 1.2.7 - Aging Facility
  - SAR 1.2.8 - Balance of Plant Facilities
  - SAR 1.4.1 through SAR 1.4.5 - Infrastructure Systems

Surface Design Organization

- NUREG-1804, Yucca Mountain Review Plan mapping
  - Summary of acceptance criteria in heading at 3-digit section level
  - Specific acceptance criteria and sub-criteria in heading at 4-digit subsection level
- Information presented once to reduce repetition; cross-referenced as needed to facilitate clarity and accuracy
- SAR 1.2.2 presents design methodologies used, which are common across structures and systems
- SAR 1.2.4, Canister Receipt and Closure Facility (CRCF), describes structures, systems, and components (SSCs) common with other surface handling facilities
- Facility-specific SSCs included within other facility sections

Surface Design Organization (continued)

- Standardized approach for presenting important to safety (ITS) and non-ITS systems and subsystems
  - Common section outline
    - 9 points for ITS SSCs
    - 3 points for non-ITS SSCs
  - Text presentation for waste handling facilities
    - Physical description of facility based upon process flow
    - Mechanical handling equipment
    - Process systems
    - Heating, ventilation, and air-conditioning (HVAC) systems
    - General references
  - Internal pointers included for relevant tables and figures within section or as appropriate to other related sections
  - Commitments to regulatory guidance documents or codes and standards made within text

SAR 1.1 Site Description as it Pertains to Preclosure – Contents

- Site geography
- Regional demography
- Local meteorology and regional climatology
- Regional and local surface and groundwater hydrology
- Site geology and seismology
- Igneous activity
- Site geomorphology
- Geochemistry
- Land use, structures and facilities, and residual radioactivity

10 CFR 63.21(c)(1); 10 CFR 63.112(c)

SAR 1.1 Site Description as it Pertains to Preclosure – Key Points

- Site location and boundary
- Geologic repository operations area (GROA)
- Probable maximum flood evaluation
- Geologic logs of drill holes
- Preclosure ground motion development

10 CFR 63.21(c)(1); 10 CFR 63.112(c)

SAR 1.2.1 Surface Operations Overview – Contents

- Overview of transportation casks, canisters, and waste packages
- Major surface facility structures and systems
- Operations overview
- Thermal management overview
- Loading plans
- Phased operation and construction activities

10 CFR 63.21(c)(2), (c)(5); 10 CFR 63.112(a)

SAR 1.2.1 Surface Operations Overview Key Points

- Site plan and major surface facilities
- Summary-level inventory of waste forms
- Summary-level flow of waste forms and containers
- Procedural safety controls
  - Postclosure related to surface facilities
  - Preclosure not related to specific facility or system

10 CFR 63.21(c)(2), (c)(5); 10 CFR 63.112(a)

SAR 1.2.2 Surface Facilities Structural, Mechanical Handling, and HVAC System Design – Contents

- Description of structural analysis methodology and results
- Description of typical design of mechanical handling equipment and HVAC components
- Facility specific applications and configurations described in appropriate facility sections

10 CFR 63.21(c)(2), (c)(3); 10 CFR63.112(a);
10 CFR 63.112(e)(1), (e)(4), (e)(8), (e)(10);
10 CFR 63.112(f)(2)

SAR 1.2.2 Surface Facilities Structural, Mechanical Handling, and HVAC System Design – Key Points

- Structural models
- Load combinations
- Natural phenomena parameters
- Ground response spectra curves
- Tables of structural analysis results
- Tables of cranes and ITS mechanical handling equipment
  - Location
  - Safety classification
  - Capacity
  - Code/standard
  - Design basis ground motion

10 CFR 63.21(c)(2), (c)(3); 10 CFR63.112(a);
10 CFR 63.112(e)(1), (e)(4), (e)(8), (e)(10);
10 CFR 63.112(f)(2)

SAR 1.10 Meeting the ALARA Requirements for Normal Operations and Category 1 Event Sequences – Contents

- Management commitment to as low as is reasonably achievable (ALARA) principles
- ALARA principles used in design and operations
- Surface and subsurface shielding design objectives and considerations

10 CFR 20; 10 CFR 63.21(c)(8);
10 CFR 63.111(a)(1);
10 CFR 63.112(e)(2), (e)(3), (e)(5)

SAR 1.10 Meeting the ALARA Requirements for Normal Operations and Category 1 Event Sequences – Key Points

- Computer codes for shielding analysis
- Source terms
- Models of various sources and facility configurations
- Radiation zone figures

10 CFR 20; 10 CFR 63.21(c)(8);
10 CFR 63.111(a)(1);
10 CFR 63.112(e)(2), (e)(3), (e)(5)

SAR 1.12 Plans for Permanent Closure, Decontamination, and Dismantlement of Surface Facilities – Contents

- Commits to following decommissioning program policies and utilizes appropriate guidance from NUREG-1757 and NUREG-1575
- Design considerations and features in design that facilitate decontamination and dismantlement (D&D) of facilities
- Information gathered in support of plans

10 CFR 63.21(c)(8); 10 CFR 63.21 (c)(22)(vi); 10 CFR 63.51

SAR 1.12 Plans for Permanent Closure, Decontamination, and Dismantlement of Surface Facilities – Key Points

- ALARA principles are considered for D&D activities
- Facility D&D order or timetable not yet determined
  - D&D planning timeline provided for development of D&D plans

10 CFR 63.21(c)(8); 10 CFR 63.21 (c)(22)(vi); 10 CFR 63.51

SAR 1.13 Equipment Qualification Program Contents

- Functions of equipment qualification (EQ) program
- EQ program requirements
- Environmental qualification process
- Seismic qualification process

10 CFR 63.112(e)(8), (e)(13);
10 CFR 63.142(d)(2)(i)

SAR 1.13 Equipment Qualification Program Key Points

- Consistent with regulatory guidance for nuclear power plants
- Definitions of harsh and mild environment
- Figures with preliminary identification of harsh and mild environments in facilities

10 CFR 63.112(e)(8), (e)(13);
10 CFR 63.142(d)(2)(i)

Facility and System Contents

- **ITS SSCs – 9 point outline utilized**
  - Facility or system description
  - Operational processes
  - Safety category classification
  - Procedural safety controls to prevent event sequences or mitigate their effects
  - Design basis and design criteria
  - Design methodologies
  - Consistency of materials with design methodologies
  - Design codes and standards
  - Design load combinations
- **Non-ITS SSCs – 3 point outline utilized**
  - Facility or system description
  - Operational processes
  - Design codes and standards

10 CFR 63.21(c)(2), (c)(3), (c)(6);
10 CFR 63.112(a);
10 CFR 63.112(e)(1), (e)(4), (e)(5), (e)(8), (e)(10), (e)(12);
10 CFR 63.112(f)(2)

Facility and System Contents (continued)

- Safety category classification
  - Described in text
  - Shown on figures
- Procedural safety controls
  - Restatement of bases
  - Identification of actions to be taken
  - Requirements for independent verification, if necessary
- Design bases and design criteria
  - System/facility
  - Subsystem/function
  - Component
  - Nuclear safety design bases (NSDB)
    - Safety function
    - Controlling parameters and values
  - Design criteria

Facility and System Contents Canister Transfer Machine

- **SAR Table 1.2.4-4 identifies NSDB and design criteria**

Table 1.2.4-4. Preclosure Nuclear Safety Design Bases and their Relationship to Design Criteria for the CRCF (Continued)

System or Facility (System Code)	Subsystem or Function (as Applicable)	Component	Nuclear Safety Design Bases		Design Criteria
			Safety Function	Controlling Parameters and Values	
	Waste Transfer/ Canister Transfer	Canister Transfer Machine (060-HTC0-FHM-00001/00002)	Protect against drop	H.CR.HTC.01. The mean probability of dropping a canister from below the two-block height due to the failure of a piece of equipment within the load-bearing path shall be less than or equal to 1×10^{-5} per tra[illegible] for each canister trans[illegible]	The canister transfer machine is required to be designed in accordance with the requirements of ASME NOG-1-2004 for Type I cranes. The canister transfer machine is required to be designed with the following features: [illegible]per limit switches

00636PR_1244_83_layout.psd

- **SAR 1.2.4.2.2.1.3 describes canister transfer machine (CTM)**
- **Section 1.2.4.2.2.3 states CTM is ITS**

Facility and System Contents Canister Transfer Machine (continued)

- **SAR Table 1.2.2-11 shows ASME NOG-1-2004 as principal design code and standard for CTM**

Table 1.2.2-11. Surface Facility Mechanical Handling Equipment (Continued)

Item	Mechanical Handling Equipment Name	Location (Facility)	Equipment Number	Handles Waste Forms?	Safety Category	Bounding Load	Capacity (tons)	Principal Design Standard	DBGM Level
40	PWR Lifting Grapple	WHF	050-HTF0-HEQ-00001	Yes	ITS	SNF	1.5	ANSI N14.6-1993	2
43	Canister Transfer Machine	CRCF	060-HTC0-FHM-00001	Yes	ITS	Canister	70	ASME NOG-1-2004, Type I	2

00636PR_1191_31_layout.psd

Facility and System Contents
Canister Transfer Machine (continued)

- **Figures 1.2.4-51 through 1.2.4-56**
  - **Process and instrumentation diagram**
  - **Logic diagrams**

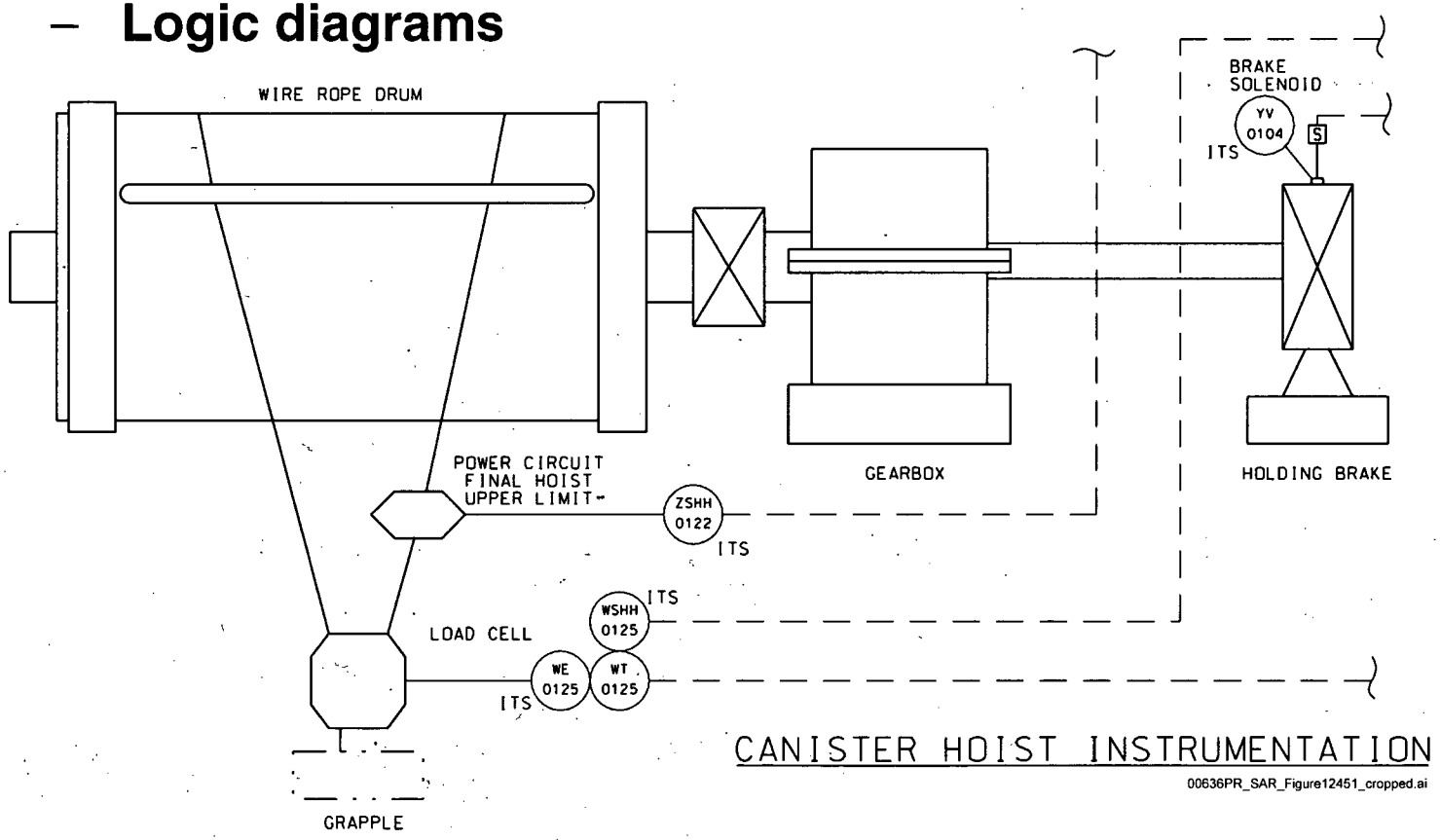

Taken from SAR Figure 1.2.4-51, sheet 2

Facility and System Key Points

- SAR 1.2.4, CRCF
  - ITS concrete structure
  - Transportation, aging, and disposal (TAD) canisters, high-level radioactive waste (HLW) canisters, DOE spent nuclear fuel (SNF) canisters
  - ITS mechanical handling equipment
    - Canister transfer machine
    - Cask transfer trolley
    - Waste package transfer trolley
    - Cranes
    - Special lifting devices
  - ITS doors and shielded slide gates
  - ITS HVAC
    - Filtration
    - Equipment cooling

Facility and System Key Points (continued)

- SAR 1.2.4, CRCF (continued)
  - ITS electrical power distribution and non-ITS normal power distribution
  - Non-ITS waste package closure
  - Procedural Safety Controls
    - Cask transfer trolley
    - Cask handling crane
    - Transportation cask
    - Confinement doors
    - Slide gates
    - Canister transfer machine
    - Waste package loading
    - ITS HVAC

Facility and System Key Points (continued)

- SAR 1.2.5, Wet Handling Facility (WHF)
  - ITS concrete structure
  - Uncanistered commercial SNF and dual-purpose canisters (DPCs)
  - Borated, stainless-steel lined pool with staging racks
    - ITS fuel handling machine
    - Non-ITS support systems
  - ITS systems and components similar to CRCF
  - Non-ITS TAD canister closure
  - Non-ITS DPC opening

Facility and System Key Points (continued)

- SAR 1.2.5, WHF (continued)
  - Procedural safety controls
    - Shielded transfer cask
    - Transportation cask
    - Pool boron concentration
    - Pool water level
    - Cask transfer trolley
    - Cask handling crane
    - Equipment confinement door
    - DPC / TAD shield ring
    - Slide gates
    - Canister transfer machine
    - ITS HVAC

Facility and System Key Points (continued)

- SAR 1.2.3, Initial Handling Facility
  - ITS concrete and steel structures
  - HLW canisters and naval SNF canisters
  - ITS mechanical handling equipment
  - ITS slide gates and shield doors
  - Non-ITS systems
    - Waste package closure
    - HVAC
    - Electrical distribution
  - Procedural safety controls
    - Cask transfer trolley
    - Cask handling crane
    - Transportation cask
    - Naval canister lifting adapter
    - Slide gates
    - Canister transfer machine
    - Waste package loading

Facility and System Key Points (continued)

- SAR 1.2.6, Receipt Facility
  - ITS concrete structure
  - Transportation casks containing TAD canisters or DPCs
  - ITS mechanical handling equipment
  - ITS slide gates and shield doors
  - Non-ITS systems
    - HVAC
    - Electrical distribution
  - Procedural safety controls
    - Cask transfer trolley
    - Cask handling crane
    - Transportation cask
    - Slide gates
    - Canister transfer machine

Facility and System Key Points (continued)

- SAR 1.2.7, Aging Facility
  - ITS concrete pads
  - ITS aging overpacks or horizontal aging modules
  - TAD canisters and DPCs containing commercial SNF
  - Non-ITS monitoring system
  - Procedural safety control
    - Surface contamination of TAD canisters and DPCs
    - Addressed in SAR 1.2.1

Facility and System Key Points (continued)

- SAR 1.2.8, Balance of Plant Facilities
  - Emergency Diesel Generator Facility
    - Two physically and electrically separated ITS diesel generators
    - ITS support systems
    - Non-ITS structure
  - Non-ITS facilities
    - Low-level waste facility
    - Central control center facility
  - ITS surface transportation components
    - Transportation cask
    - Cask tractor and cask transfer trailer
    - Site transporter
    - Site prime mover
  - Procedural safety controls
    - Site transporter
    - Cask tractor and cask transfer trailer
    - Site prime mover

10 CFR 63.112(e)(11)

Facility and System Key Points (continued)

- **SAR 1.4.1, Electrical Power** — 10 CFR 63.112(e)(11)
  - Normal power distribution site-wide
  - ITS AC and DC power distribution system
    - CRCF and WHF
  - Procedural safety control
    - Operability of ITS diesel generators and support systems
- **SAR 1.4.2, Controls and Monitoring** — 10 CFR 63.112(e)(7)
  - Non-ITS as no human actions or digital controllers are relied upon to reduce frequency or mitigate consequences of event sequences
  - ITS hardwire controls separate from micro-processors for normal operations
  - Logic diagrams for ITS controls with descriptions of systems and components in facility sections

Facility and System Key Points (continued)

10 CFR 63.112(e)(6), (e)(9)

- SAR 1.4.3, Fire Protection
  - ITS pre-action suppression used to reduce likelihood of inadvertent operation (CRCF and WHF)
- SAR 1.4.4, Plant Services
  - Non-ITS compressed air, service gases, water, fuel oil and chilled / hot water systems
- SAR 1.4.5, Waste Management
  - Non-ITS systems
  - Limited quantities of low-level radioactive waste
  - Processing done by mobile equipment

Surface Design Key References

- Design and analysis information to assess safety of repository included in surface design sections
  - Figures
    - General arrangements
    - Confinement, suppression, radiation zone, and environment areas
    - Process and instrumentation diagrams
    - Ventilation and instrumentation diagrams
    - Ventilation flow diagrams
    - Logic diagrams
    - Equipment envelopes
    - Electrical single line diagrams
    - Response spectra curves
    - Structural models

Surface Design Key References (continued)

- Tables
  - Design bases and design criteria
  - Principal design codes and standards
  - Summaries of key design and analysis input values
  - Summaries of key design and analysis output values
- *Basis of Design for the TAD Canister-Based Repository Design Concept*
- 18 structural calculations provided along with LA to facilitate technical review

U.S. Department of Energy
Office of Civilian Radioactive Waste Management

www.ocrwm.doe.gov

Subsurface Facilities

Presented to:
U.S. Nuclear Regulatory Commission

Presented by:
Jack Bailey
Licensing & Nuclear Safety
Bechtel SAIC Company, LLC

June 19, 2008
Rockville, Maryland

Overview – SAR 1.3.1 – 1.3.6

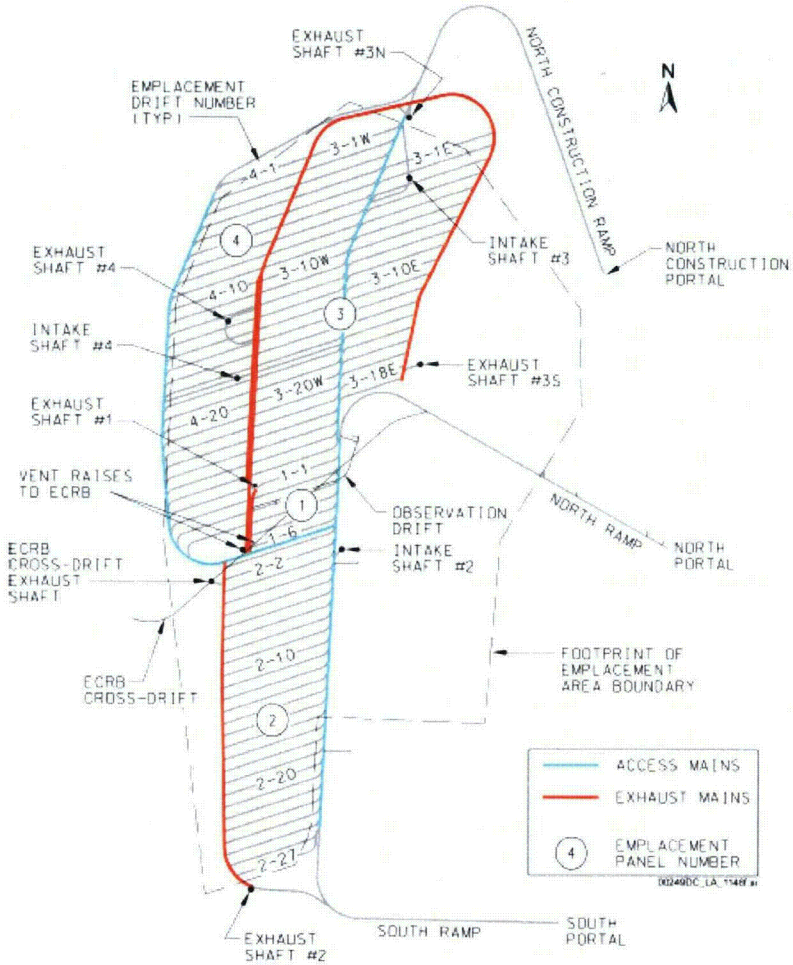

SAR Figure 1.3.1-1

- **SAR 1.3.1** Subsurface Operations Overview
- **SAR 1.3.2** General Subsurface Design Considerations
- **SAR 1.3.3** Nonemplacement Areas of the Subsurface Facility
- **SAR 1.3.4** Emplacement Areas of the Subsurface Facility
- **SAR 1.3.5** Subsurface Facility Ventilation
- **SAR 1.3.6** Subsurface Facility Closure

10 CFR 63.21(c)(2) and 10 CFR 63.21(c)(3), 10 CFR 63.111(d), 10 CFR 63.112(a), 10 CFR 63.112(e), 10 CFR 63.112(f)(2), 10 CFR 63.113(b), 10 CFR 63.113(c)

Subsurface Overview (Continued)

- Subsurface design approach to ensure safety during preclosure operations and to meet postclosure parameters with minimum modifications at time of closure
  - Emplacement drifts
    - Engineered structures and materials that support operations (committed materials) considered in postclosure analyses and do not need to be removed
    - Only final inspections and placement of drip shields must be performed at closure
  - Non-emplacement areas
    - Removal of unanalyzed material and backfill of ramps and shafts

Subsurface Overview (Continued)

- Conformance tables are provided in each section that identify design configurations or procedural controls that ensure postclosure parameters, both important to waste isolation (ITWI) and non-ITWI, are satisfied
- Preclosure safety analysis identified only one important to safety (ITS) component - transport and emplacement vehicle (TEV)
  - The TEV nuclear safety design bases (NSDB) and criteria reported in SAR 1.3.3
  - Subsurface ventilation and ground support classified non-ITS

SAR 1.3.1 Subsurface Operations Overview Contents

- Major structures and equipment
  - Overview of systems, structures and components
  - Subsurface openings
- Facility operations description
  - Description of integrated subsurface operations
  - Subsurface operations meet preclosure and postclosure thermal limits
  - Description of concurrent underground development and waste emplacement operations areas
  - Construction hazards
    - Fire, runaway equipment and flooding
  - Construction methods
- Description of surface/subsurface interfaces
- Table showing conformance of subsurface facility design to thermal management postclosure control parameters

10 CFR 63.21(c)(2), 10 CFR 63.21(c)(3), 10 CFR 63.112(a)

SAR 1.3.1 Subsurface Operations Overview Key Points

- Subsurface facility shown at full extent
  - Emplacement drifts constructed over time (GI-2 describes overall repository development)
- Off-normal response activities in subsurface facility
- Description of general approach to retrieval operations
- Provisions provided in design for performance confirmation interface
  - Test drift and observation drift in Panel 1 (Additional configuration details in SAR 1.3.3)

10 CFR 63.21(c)(2), 10 CFR 63.21(c)(3), 10 CFR 63.112(a)

SAR 1.3.1 Subsurface Operations Overview Key Points (continued)

- Thermal management description
  - Describes subsurface preclosure and postclosure thermal limits
  - Describes emplacement drift loading plan
  - Describes range of thermal characteristics of waste stream that might be received (additionally in SAR 1.5.1)
  - Provides methodology for performing receipt and emplacement of range of waste streams considering both surface and subsurface facility limits
  - Performs thermal demonstration using Estimated Limiting Waste Stream (ELWS) (SAR 2.3.5)
  - Identifies interface with postclosure analyses to examine variability in thermal receipt (SAR 2.3.5)
  - Identifies DOE commitment to perform analysis before loading each drift

10 CFR 63.21(c)(2), 10 CFR 63.21(c)(3), 10 CFR 63.112(a)

Example from Postclosure Parameter Tables

- **Sections contain tables showing conformance of design to postclosure parameters**
  - **Provides values or ranges of values or constraints**
  - **Conformance may be accomplished by procedural control or by design configuration/design criteria requirement**
  - **Table provides identification of ITWI and non-ITWI**

Table 1.3.1-4. Summary of Conformance of Subsurface Facility Design to Postclosure Control Parameters—Thermal Management (Continued)

Structure, System and Component	Postclosure Control Parameter		Relevant to ITWI	Design Criteria/Configuration	Postclosure Procedural Safety Control
	Parameter Number and Title	Values, Ranges of Values or Constraints			
Emplacement Drift Configuration	05-03 Waste Package Thermal Limits	The waste package emplacement shall be within an envelope such that the emplacement of waste packages does not exceed the other relevant thermal limits of mid-pillar temperature, drift wall temperature, waste package temperature, and cladding temperature. [illegible] local-average line-load (over any [illegible] ment) in the emplaced	Yes	NA (Background information: This requirement is integrated into the thermal [illegible] agement criteria for [illegible] stated in	Waste Package Loading plans will be developed using the methodology described in Section 1.3.1.2.5. The loading plans, when implemented, will result [illegible]

00636PR_1314_layout.psd

10 CFR 63.21(c)(2), 10 CFR 63.21(c)(3), 10 CFR 63.112(a)

SAR 1.3.1 Subsurface Operations Overview Key References

- ***Underground Layout Configuration for LA***
- ***Evaluation of Waste Stream Receipt Scenarios for Repository Loading***
- ***Yucca Mountain Repository Concept of Operations***

SAR 1.3.2 General Subsurface Design Considerations – Contents

- General design considerations
  - Codes and standards
  - Design methodologies, design loads and load combinations
  - Applicable to ITS, non-ITS, ITWI, and non-ITWI structures, systems and components (SSCs)
- Design of mechanical handling equipment
  - TEV, Drip Shield Emplacement Gantry
- Design of subsurface facility SSCs
  - Subsurface electrical distribution
  - Faulting and standoffs
  - Subsurface openings and configuration
  - Ground support
- Seismic design

10 CFR 63.21(c)(2), 10 CFR 63.21(c)(3), 10 CFR 63.112(a), 10 CFR 63.112(e), 10 CFR 63.112(f)(2)

SAR 1.3.2 General Subsurface Design Considerations – Key Points

- Layout bases described
- Seismic bases
  - Derived from testing and seismic methodology described in SAR 1.1.5
  - Spectral accelerations/time histories developed at depth of repository horizon
  - Subsurface facility shows little sensitivity to very low frequency (0.5 Hz) seismic hazard loads (Section 1.1.5)
- TEV design
  - Performance requirements for operations identified
  - NSDB requirements for TEV identified; codes and standards evaluations described
  - Waste transport operations described in SAR 1.3.3 and SAR 1.3.4

10 CFR 63.21(c)(2), 10 CFR 63.21(c)(3), 10 CFR 63.112(a), 10 CFR 63.112(e), 10 CFR 63.112(f)(2)

SAR 1.3.2 General Subsurface Design Considerations – Key References

- *Underground Layout Configuration for LA*
- *Ground Control for Emplacement Drifts for LA*
- *Ground Control for Non-Emplacement Drifts for LA*
- *Supplemental Earthquake Ground Motion Input for a Geologic Repository at Yucca Mountain, NV*

SAR 1.3.3 Nonemplacement Areas of the Subsurface Facility – Contents

- Description of structures and features common to subsurface facility
  - Portals and ramps
  - Access and exhaust mains
  - Ventilation shafts
- Description of engineered systems
  - Electrical system description, communications and controls
  - Ground support, invert system
- Identification of preclosure NSDB and relationship to TEV design criteria
- Table showing conformance of subsurface facility nonemplacement areas design to postclosure control parameters

10 CFR 63.21(c)(2), 10 CFR 63.21(c)(3), 10 CFR 63.111(d), 10 CFR 63.112(a), 10 CFR 63.112(e), 10 CFR 63.112(f)(2)

SAR 1.3.3 Nonemplacement Areas of the Subsurface Facility – Key Points

- Performance confirmation openings such as observation drift and seepage alcoves
- Inspection and monitoring of inaccessible areas
- TEV
  - Design and operations description
  - Transportation routes
  - Control systems
  - Design requirements and implementation description (tabular)
  - Load combinations

10 CFR 63.21(c)(2), 10 CFR 63.21(c)(3), 10 CFR 63.111(d), 10 CFR 63.112(a), 10 CFR 63.112(e), 10 CFR 63.112(f)(2)

SAR 1.3.3 Nonemplacement Areas of the Subsurface Facility – Key References

- ***Underground Layout Configuration for LA***
- ***Ground Control for Non-Emplacement Drifts for LA***

SAR 1.3.4 Emplacement Areas of the Subsurface Facility – Contents

- Structures and features common to emplacement drifts
  - Ground support - describes codes and standards and analysis based on rock type and loading conditions
  - Invert steel structure and ballast
  - Waste package emplacement pallet
- Waste package emplacement by TEV
- Drip shield
  - Includes codes and standards and load combinations
  - Material and fabrication considerations
  - Installation process including description of drip shield emplacement gantry
- Table showing conformance of subsurface facility emplacement areas design to postclosure control parameters

10 CFR 63.21(c)(2), 10 CFR 63.21(c)(3), 10 CFR 63.111(d), 10 CFR 63.112(a), 10 CFR 63.112(e), 10 CFR 63.112(f)(2), 10 CFR 63.113(b), 10 CFR 63.113(c)

SAR 1.3.4 Emplacement Areas of the Subsurface Facility – Key Points

- Description of emplacement drifts
  - Preclosure operations described
  - Emplacement drift ground support described (not ITS)
  - Invert provides long term stability for waste package
  - Designed to meet postclosure requirements without alteration
  - Drip shields placed at closure
  - Thermal loading (SAR 1.3.1)
  - Location of emplacement area (SAR 1.3.2)
  - Materials remaining in drift at closure (SAR 1.3.6)
  - Retrieval readiness throughout preclosure described
- Emplacement drifts excavated and placed in service in small groups (3-5 drifts)
  - Construction considerations described

10 CFR 63.21(c)(2), 10 CFR 63.21(c)(3), 10 CFR 63.111(d), 10 CFR 63.112(a), 10 CFR 63.112(e), 10 CFR 63.112(f)(2), 10 CFR 63.113(b), 10 CFR 63.113(c)

SAR 1.3.4 Emplacement Areas of the Subsurface Facility – Key References

- *Underground Layout Configuration for LA*
- *Longevity of Emplacement Drift Ground Support Materials for LA*
- *Drip Shield and Waste Package Emplacement Pallet Design Report*
- *Ground Control for Emplacement Drifts for LA*
- *Drift Degradation Analysis*
- *Subsurface Geotechnical Parameters Report*

10 CFR 63.21(c)(2), 10 CFR 63.21(c)(3), 10 CFR 63.111(d), 10 CFR 63.112(a), 10 CFR 63.112(e), 10 CFR 63.112(f)(2), 10 CFR 63.113(b), 10 CFR 63.113(c)

SAR 1.3.5 Subsurface Facility Ventilation Contents

- Identification of ventilation operational limits
- Description of structures and features common to subsurface ventilation system
  - Fan installations
  - Isolation barriers
  - Emplacement access doors
- Description of subsurface ventilation systems operations
- Analyses of off normal event effects (ventilation shutdown)
  - Ventilating partially obstructed drifts
  - With and without natural convection
- Table showing conformance of subsurface ventilation system design to postclosure control parameters

10 CFR 63.21(c)(2), 10 CFR 63.21(c)(3), 10 CFR 63.112(a)

SAR 1.3.5 Subsurface Facility Ventilation Key Points

- Subsurface facility ventilation non-ITS
  - No Category 1 or 2 events identified as part of subsurface operations
  - No filtration of subsurface ventilation exhaust or continuous radiation monitoring required
- Termination of loss of ventilation events accomplished in 30 days or less
  - Basis for 30 day recovery provided
- Concurrent but separate ventilation required for emplacement operations and construction
  - Description of sequence for movement of isolation barriers that maintain ventilation systems separation during placement into service of additional emplacement drifts

10 CFR 63.21(c)(2), 10 CFR 63.21(c)(3), 10 CFR 63.112(a)

SAR 1.3.5 Subsurface Facility Ventilation Key References

- ***Drift Wall Thermal Response to Loss of Ventilation***
- ***Subsurface Construction and Emplacement Ventilation***
- ***Yucca Mountain Repository Concept of Operations***

SAR 1.3.6 Subsurface Facility Closure Contents

- Description of the general sequence of closure activities
  - Final inspection of waste packages
  - Installation of drip shields
  - Removal of noncommitted materials from subsurface facility
  - Placement of backfill in ramps and shafts
  - Regrading of affected areas and installation of surface monuments (SAR 5.8)
  - Final site restoration (SAR 1.12)
  - Table showing conformance of subsurface facility design to postclosure control parameters

10 CFR 63.21(c)(2), 10 CFR 63.21(c)(3), 10 CFR 63.112(a)

SAR 1.3.6 Subsurface Facility Closure Key Points

- Drip shield classified as ITWI but non-ITS
- Committed material types not previously inventoried, and/or committed material quantities, in excess of previously analyzed quantities, will be re-analyzed for acceptance
- Repository sealing accomplished by placement of backfill in ramps, shafts, and boreholes - backfill entire length of openings to surface
- Conceptual closure operations described based on subsurface design

10 CFR 63.21(c)(2), 10 CFR 63.21(c)(3), 10 CFR 63.112(a)

Overview
SAR 1.5.1-1.5.2

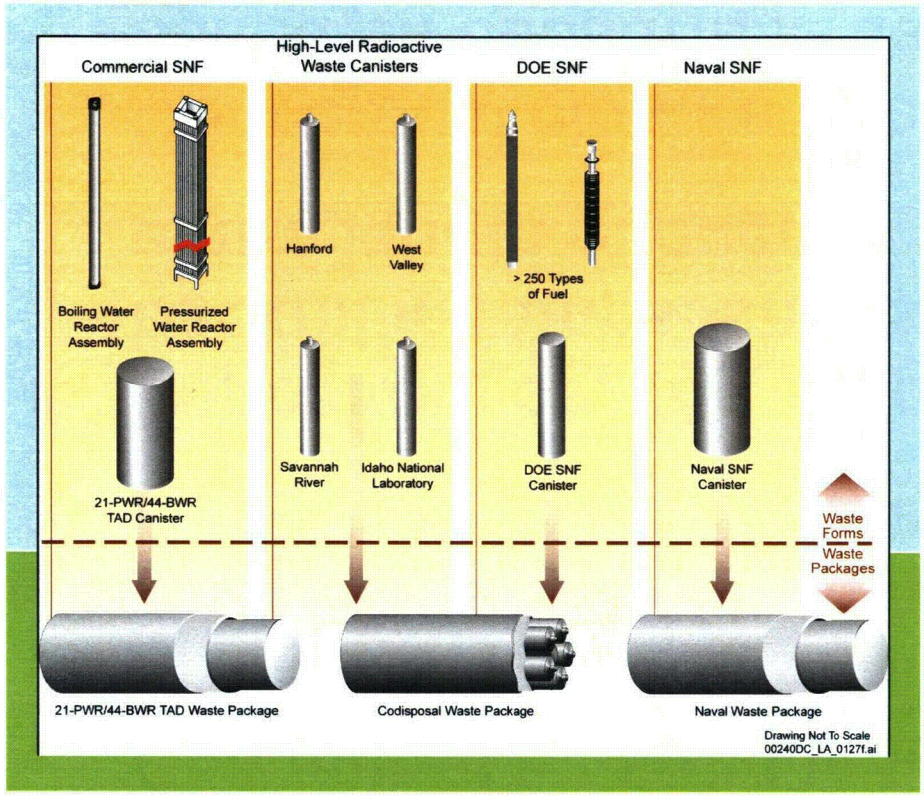

Taken from SAR Figure 1.5.2-1

SAR 1.5.1 Characteristics of Spent Nuclear Fuel and High-Level Radioactive Waste

SAR 1.5.2 Waste Package

10 CFR 63.21(c)(2), 10 CFR 63.21(c)(3), 10 CFR 63.21(c)(4)

10 CFR 63.112(a), 10 CFR 63.112(f)(2)

SAR 1.5.1 Characteristics of Spent Nuclear Fuel and High-Level Radioactive Waste – Contents

- Receipt basis from commercial and federal owners' descriptions of parameters of spent fuel and HLW (e.g., physical, thermal and nuclear characteristics and source term)
  - Commercial SNF
  - HLW
  - DOE SNF
  - Naval SNF
- Description of disposable canisters
  - Commercial SNF (TAD)
  - HLW
  - DOE SNF
  - Naval SNF
- Description of DPCs
- Table showing conformance to preclosure NSDB and relationship to design criteria for canisters
- Table showing conformance of commercial SNF to postclosure control parameters
- Naval SNF postclosure NSDB

10 CFR 63.21(c)(2), 10 CFR 63.21(c)(3), 10 CFR 63.21(c)(4)

Example from Preclosure NSDB Tables in LA Design Sections

- Sections contain tables showing conformance of design to NSDB
  - Provides safety function and controlling parameters and values for individual SSC
  - Relationship identified by design criteria which must be satisfied by SSC
  - Design bases and design criteria generally reliability based

Table 1.5.1-17. Preclosure Nuclear Safety Design Bases and their Relationship to Design Criteria for the HLW Canister

System or Facility (System Code)	Subsystem or Function (as Applicable)	Component	Nuclear Safety Design Bases		Design Criteria
			Safety Function	Controlling Parameters and Values	
DOE and Commercial Waste Package System (DS)	HLW	HLW Canister	Provide containment	DS.IH.04. The mean conditional probability of breach of an HLW canister resulting from a drop of the canister shall be less than or equal to 3×10^{-2} per drop.	The HLW canister is required to be designed such that the maximum effective plastic strain from a drop meets the required reliability when evaluated against the HLW canister capacity curve.

00636PR_15117_layout.psd

SAR 1.5.1 Characteristics of Spent Nuclear Fuel and High-Level Radioactive Waste – Key Points

- Identification of likely variability in waste stream and number of waste packages emplaced as described in LA
- Describes characteristics of each waste form and provides pointers to how waste form analyzed in LA
  - Table 1.5.1 - 13 (Commercial SNF)
  - Table 1.5.1 - 22 (HLW)
  - Table 1.5.1 - 23 (DOE SNF)

Table 1.5.1-13. Commercial SNF Analysis Basis

Fuel Form	Preclosure Releases	Criticality	TSPA	Postclosure Criticality
BWR commercial SNF, PWR commercial SNF	Analyses of the releases for PWR/BWR commercial SNF (either uncanistered or in TAD canister or DPC handling operations) for bounding	Criticality of canistered or uncanistered commercial SNF is a beyond Category 2 event sequence based on the results of the analyses described in	The TSPA model uses commercial SNF with an average burnup of 38 GWd/MTHM, based on initial shipment of	The postclosure criticality evaluation of BWR/PWR commercial SNF in TAD canisters provided in

00636PR_15113_layout.psd

10 CFR 63.21(c)(2), 10 CFR 63.21(c)(3), 10 CFR 63.21(c)(4)

SAR 1.5.1 Characteristics of Spent Nuclear Fuel and High-Level Radioactive Waste – Key Points

(continued)

- The multi-canister overpack canister (MCO) will be analyzed in accordance with NRC approved methodology and included in a future update to the LA
- TAD specification performance envelope described and Table 1.5.1-10 contains pointers from TAD specification to LA analysis
- Description of naval waste and canisters (unclassified)

10 CFR 63.21(c)(2), 10 CFR 63.21(c)(3), 10 CFR 63.21(c)(4)

SAR 1.5.1 Characteristics of Spent Nuclear Fuel and High-Level Radioactive Waste Key References

- ***Potential Repository Wastes – Inventory and Characteristics***
- ***Transportation, Aging and Disposal Canister System Performance Specification***

SAR 1.5.2 Waste Package – Contents

- Six waste packages configurations described
  - Codes and standards
  - Physical dimensions and weights of waste packages provided
  - Waste package component materials identified including Alloy 22 design property limitations
  - Fabrication description
- Description of nondestructive examination of fabrication and closure welds of waste package
- Low plasticity burnishing for post-weld stress mitigation described

SAR 1.5.2 Waste Package – Contents (continued)

- Three waste package configurations were chosen for analysis (21 PWR/44 BWR TAD, Naval Long and 5-DHLW/DOE Short Codisposal)
  - Summary of structural analyses for normal loads
  - Summary of structural analyses of outer corrosion barrier for event sequences
  - Tiered screening criteria for material failure for mechanical loading
- Preclosure NSDB and their relationship to design criteria for waste package
- Table showing conformance of waste package design to postclosure control parameters

SAR 1.5.2 Waste Package – Key Points

- Structural analyses for three flagship waste package configurations to demonstrate methodology for acceptability of additional waste package configurations
- Prototype program description provided
- The acceptance criteria for waste package reliability during event sequences based on elastic-plastic analysis methods
- Inner vessel designed in accordance with ASME code for internal pressure and deadweight loads (N stamped)
- Outer corrosion barrier specifically designed as corrosion barrier, not pressure vessel, and constructed in accordance with applicable technical requirements of ASME code (not N stamped)

10 CFR 63.21(c)(2), 10 CFR 63.21(c)(3)

SAR 1.5.2 Waste Package – Key References

- ***Waste Package Component Design Methodology Report***
- ***Waste Package Fabrication***

SAR 1.11 Retrieval – Content

- Retrieval Plans
  - Design considerations provided in subsurface facility design to maintain capability to retrieve waste
  - Operational processes and conditions of retrieval within design bases
- Subsurface SAR Sections (1.3.1 – 1.3.6) describes physical capability
- Interaction with ongoing programs such as Performance Confirmation Program
- Description of methodology for identifying and analyzing potential retrieval problems
- Alternative storage plans and alternative facility location provided

10 CFR 63.21(c)(7), 10 CFR 63.111 (e)(1), 10 CFR 63.111(e)(7)

SAR 1.11 Retrieval – Key Points

- Specific plans to be developed if retrieval required
- Timeline for development of retrieval plans provided
- Considerations of conditions beyond licensing bases provided
- Retrieval capability throughout preclosure period maintained
- Same or similar equipment for retrieval from subsurface as used for waste package emplacement

10 CFR 63.21(c)(7), 10 CFR 63.111 (e)(1), 10 CFR 63.111(e)(7)

SAR 1.11 Retrieval – Key References

- ***Concepts for Waste Retrieval and Alternate Storage of Radioactive Waste***

U.S. Department of Energy
Office of Civilian Radioactive Waste Management

www.ocrwm.doe.gov

Preclosure Safety Analysis Methodology and Results

Presented to:
U.S. Nuclear Regulatory Commission

Presented by:
Thomas Dunn
Preclosure Safety Analysis
Bechtel SAIC Company, LLC

June 20, 2008
Rockville, Maryland

Presentation Outline

- Overview of preclosure safety analysis (PCSA) process
- Overview of each PCSA safety analysis report (SAR) section
  - Contents
  - Key points
  - Key references

Preclosure Safety Analysis Process

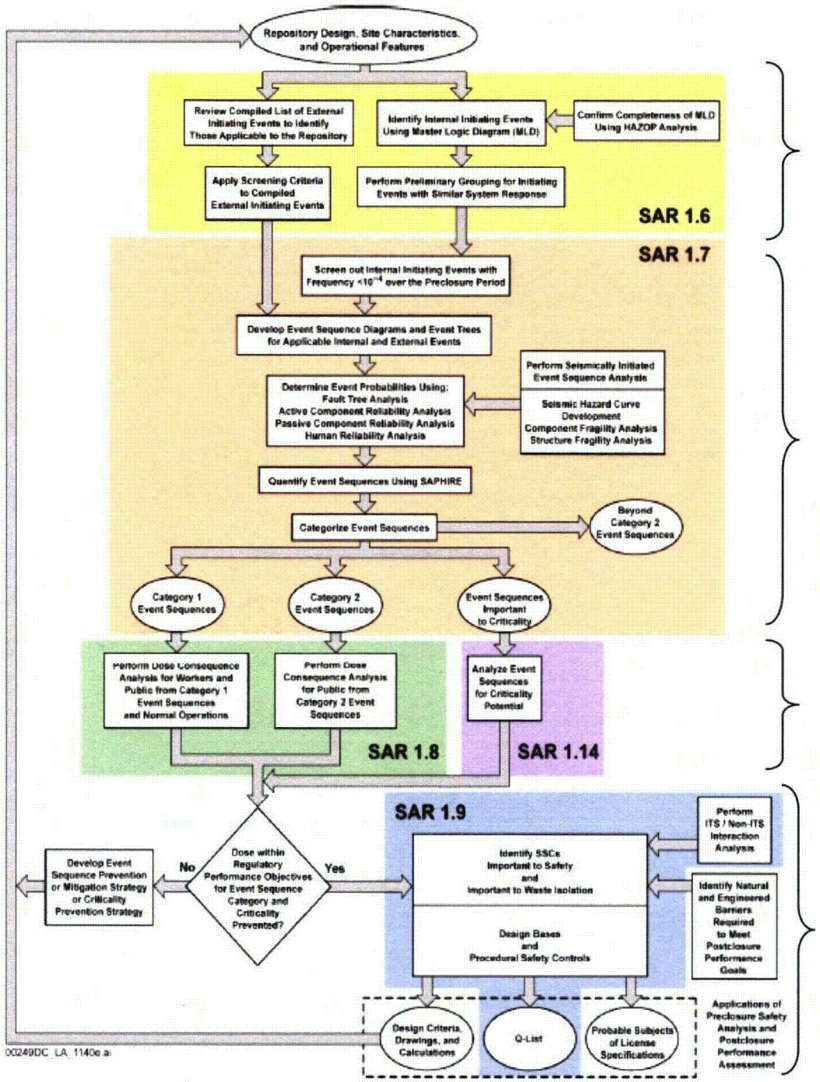

SAR Figures 1.6-1, 1.7-1, 1.8-1, and 1.9-1

What can happen?

How likely is it?

What are the consequences?

Identify important to safety (ITS) structures, systems, and components (SSCs), important to waste isolation (ITWI) design bases, and procedural safety controls

Preclosure Safety Analysis Process (continued)

- PCSA SAR sections identify
  - Methodology
  - Example using methodology
  - Results

SAR 1.6 Internal and External Hazards Identification

- Presents summary overview of PCSA
- Describes external initiating events methodology for identifying, grouping, and screening
  - Identifies external hazards or events, e.g., aircraft hazards, seismic events and flooding
  - Lists 89 identified external hazards or events
  - Provides grouping of 89 external hazards into 13 hazard categories
  - Identifies two external hazards requiring event sequence analysis in SAR 1.7
    - Loss of offsite electrical power
    - Seismic events

10 CFR 63.21(c)(5)

SAR 1.6 Internal and External Hazards Identification (Continued)

- Describes internal initiating events identification methodology
  - Describes use of master logic diagrams (MLDs) and hazard and operability (HAZOP) evaluations for identifying internal initiating events
  - Presents portion of HAZOP evaluation and example of how used to supplement MLDs to assure comprehensive identification of internal initiating events
- Identified and listed over 500 potential initiating events considered in SAR 1.7

10 CFR 63.21(c)(5)

SAR 1.6 Key References

- **Event sequence development analysis**
  - **Initial Handling Facility**
  - **Canister Receipt and Closure Facility**
  - **Wet Handling Facility**
  - **Receipt Facility**
  - **Subsurface Operations**
  - **Intra-Site Operations and Balance of Plant**
- ***Frequency Analysis of Aircraft Hazards for License Application***
- ***Industrial/Military Activity-Initiated Accident Screening Analysis***
- ***External Events Hazards Screening Analysis***
- ***Construction Hazards Screening Analysis***

10 CFR 63.21(c)(5)

SAR 1.7 Event Sequence Analysis

- Describes PCSA event sequence analysis methodology
  - Event sequence diagrams, event trees, and fault trees
  - Human reliability analysis for waste handling activities
  - Industry-wide reliability data for active systems and components
  - Structural or thermal failure probabilities for casks and canisters using representative canister
  - Seismic probabilistic analyses using site hazard curve with structure and equipment fragilities
- Gives example for canister transfer machine event sequences using methodology

10 CFR 63.21(c)(5)

SAR 1.7 Event Sequences Analysis (continued)

- Tables provided by facility and area listing event sequences initiated by internal events or seismic events (SAR Tables 1.7-7 through 1.7-18)
  - Evaluated in SAR 1.14 – Nuclear Criticality Safety
  - No event sequences with end state important to criticality
- No Category 1 event sequences
- Category 2 event sequences
  - Doses evaluated in SAR 1.8

10 CFR 63.21(c)(5)

SAR 1.7 Key References

- **Reliability and event sequence categorization analysis**
  - **Initial Handling Facility**
  - **Canister Receipt and Closure Facility**
  - **Wet Handling Facility**
  - **Receipt Facility**
  - **Subsurface Operations**
  - **Intra-Site Operations and Balance of Plant**
- ***Seismic Event Sequence Quantification and Categorization Analysis***

10 CFR 63.21(c)(5)

SAR 1.8 Consequence Analysis

- Describes dose analysis methodology for normal operations and event sequences for workers and public
- Provides conservative and bounding inputs
- Develops and analyzes 14 bounding Category 2 event sequences that address Category 2 event sequences identified in SAR 1.7

10 CFR 63.21(c)(5)

SAR 1.8 Consequence Analysis (continued)

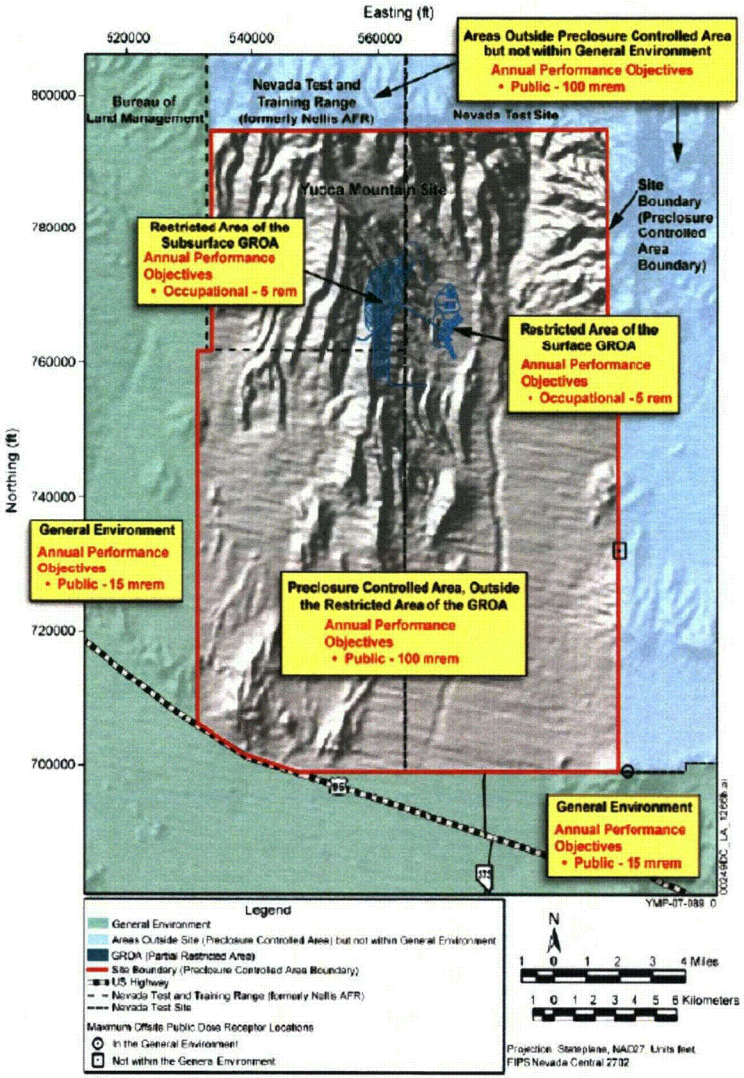

SAR Figure 1.8-2

- Presents dose consequences
  - Workers
  - Onsite public
  - Public in general environment
  - Public offsite, but not in general environment
- Provides results
  - Results presented in Table 1.8-36
- Doses below 10 CFR 63 performance objectives

10 CFR 63.21(c)(5)

SAR 1.8 Key References

- ***Preclosure Consequence Analyses***
- ***Release Fractions for Spent Nuclear Fuel and High-Level Waste***
- ***General Public Atmospheric Dispersion Factors***
- ***GROA Airborne Release Dispersion Factor Calculation***

SAR 1.14 Nuclear Criticality Safety

- Describes nuclear criticality safety organization, administration, and requirements
- Describes process and methodology used for criticality safety evaluation
- Presents criticality safety evaluations for each waste handling facility
- Provides example of criticality safety analysis using process and methodology

10 CFR 63.21(c)(5)

SAR 1.14 Nuclear Criticality Safety (Continued)

- **Results show no Category 1 or Category 2 event sequences with end state important to criticality**
- **Key references**
  - ***Preclosure Criticality Analysis Process Report***
  - ***Preclosure Criticality Safety Analysis***

10 CFR 63.21(c)(5)

SAR 1.9 SSC Classification

- Presents Preclosure Safety Analysis and Postclosure Performance Assessment classification results
  - SSCs
    - ITS
    - Important to waste isolation (ITWI)
  - Nuclear safety design bases (NSDB)
    - ITS SSCs
    - ITWI features and SSCs
  - Procedural safety controls
    - ITS SSCs
    - ITWI features and SSCs

SAR 1.9 SSC Classification (continued)

- **Describes process for identifying ITS SSCs**
- **Classification as ITS or non-ITS SSCs presented in Table 1.9-1**

Table 1.9-1. Preclosure Safety Classification of SSCs (Continued)

System or Facility	Subsystem or Function (as Applicable)	Component	Preclosure Safety Classification
Mechanical Handling System (Continued)	Waste Transfer/Fuel Assembly Transfer	Spent Fuel Transfer Machine (WHF: 050-HTF0-FHM-00001)	ITS
		Pressurized Water Reactor Lifting Grapples (WHF: 050-HTF0-HEQ-00001) Boiling Water Reactor Lifting Grapples (WHF: 050-HTF0-HEQ-00002)	ITS

00636PR_1191_31_layout.psd

10 CFR 63.21(c)(5) and (c)(18)

SAR 1.9 Nuclear Safety Design Bases

- From event sequence analyses in SAR 1.7
  - Identifies NSDB requirements for SSCs classified as ITS for preventing or mitigating event sequences
  - Identifies safety functions and controlling parameters or values for that function
  - Presents pointer to SAR section containing design criteria developed to ensure NSDB requirements are satisfied
  - Design criteria that satisfy NSDB requirements provided in SAR 1.2, 1.3, 1.4, and 1.5 for ITS SSCs

10 CFR 63.21(c)(5) and (c)(18)

SAR 1.9 Nuclear Safety Design Bases (continued)

- **NSDB requirements presented in Tables 1.9-2 through 1.9-7 by facility or area**

Table 1.9-7. Preclosure Nuclear Safety Design Bases for the Subsurface Operations ITS SSCs

System or Facility (System Code)	Subsystem or Function (As Applicable)	Component	Nuclear Safety Design Bases		Representative Event Sequence (Sequence Number)	LA Section Presenting Design Criteria
			Safety Function	Controlling Parameters and Values		
DOE and Commercial Waste Package System (DS)	DOE and Commercial Waste Package	Entire	Provide containment	DS.SS.01. The mean conditional probability of breach of a sealed waste package resulting from a side impact shall be less than or equal to 1×10^{-8} per impact.	SSO-ESD03-WP (Seq. 6-3)	Table 1.5.2-6

00641PR_197_layout.psd

10 CFR 63.21(c)(5) and (c)(18)

SAR 1.9 Procedural Safety Controls

- **Procedural safety controls identified and relied upon in event sequence analyses presented in Table 1.9-10**

Table 1.9-10. Preclosure Procedural Safety Controls

Item	Facility/ Operations Area	SSC	Procedural Safety Controls	Basis	LA Section Describing Implementation
PSC-1	IHF, CRCF, RF, WHF	Cask transfer trolley	The cask transfer trolley is deflated during loading of cask onto trolley, cask preparation activities, and during canister unloading or loading activities.	This control limits the probability of spurious movement of the cask transfer trolley and resulting canister impact.	1.2.3.2.1.4 1.2.4.2.1.4 1.2.5.2.1.4 1.2.6.2.1.4

00641PR_1910_layout.psd

10 CFR 63.21(c)(5) and (c)(18)

SAR 1.9 Key References

- *Preclosure Nuclear Safety Design Bases*
- *Preclosure Procedural Safety Controls*
- **PCSA references submitted for inclusion on docket with license application contributed over 12,000 pages**

U.S. Department of Energy
Office of Civilian Radioactive Waste Management

www.ocrwm.doe.gov

Postclosure Performance Assessment — Overview

Presented to:
U.S. Nuclear Regulatory Commission

Presented by:
J. Russell Dyer
Director, Office of Chief Scientist
Office of Civilian Radioactive Waste Management
U.S. Department of Energy

June 20, 2008
Rockville, Maryland

Office of Chief Scientist Postclosure Responsibilities

- GI-5 Site Characterization
- SAR 2 Repository System After Permanent Closure
- SAR 4 Performance Confirmation

GI-5 Site Characterization

- Contents
  - Description of site characterization activities
    - Site studies and data before formal site characterization
    - Site characterization program (1988 to 2001)
    - Testing and monitoring after formal site characterization
  - Summary of site characterization results

10 CFR 63.21(b)(5)

GI-5 Site Characterization

(continued)

- **Key points**
  - Located in Southern Great Basin
  - Arid to semi-arid conditions
  - Long-term paleoclimate record for Yucca Mountain region

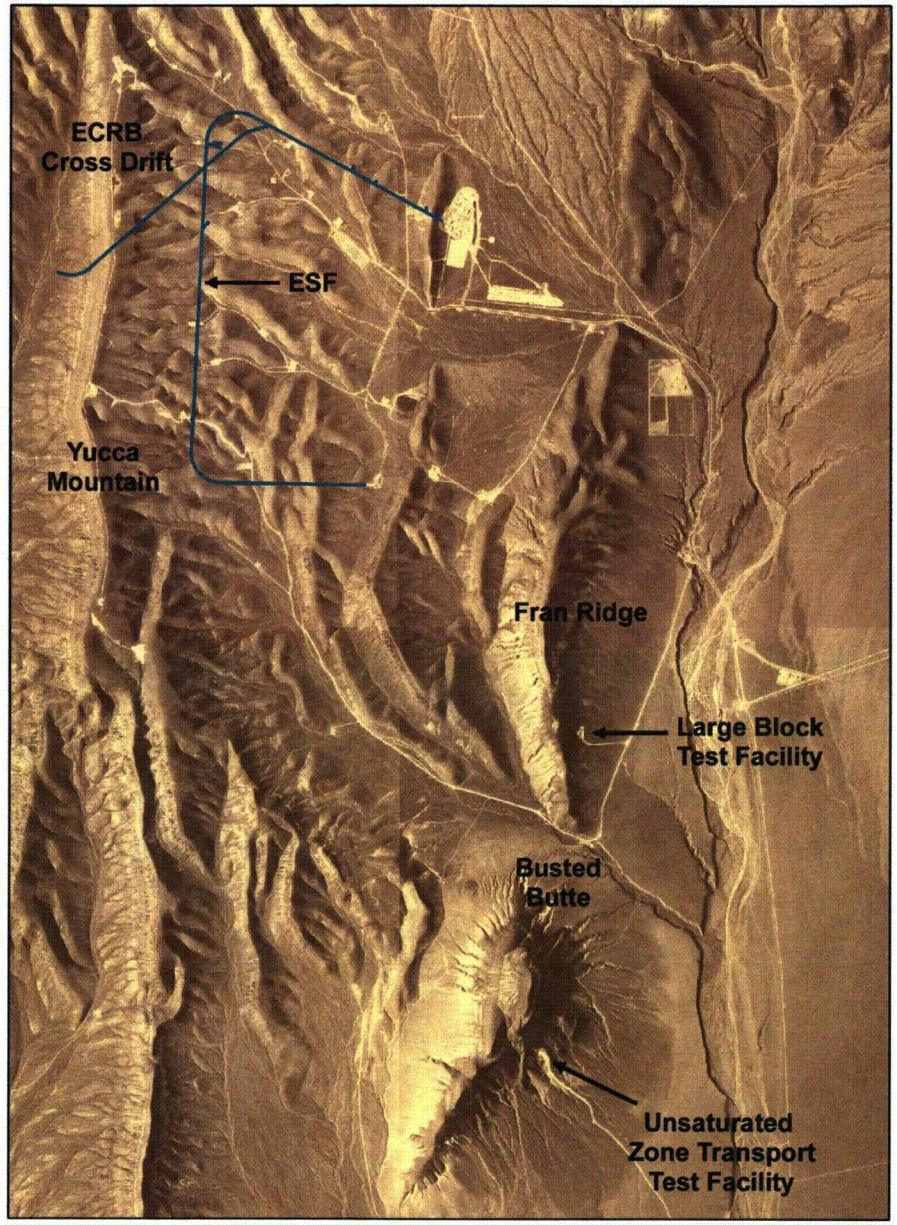

00240DC_LA_0287.ai

GI Figure 5-13

GI-5 Site Characterization (continued)

- **Key points** (continued)
  - Extensive surface-based studies conducted in vicinity of repository

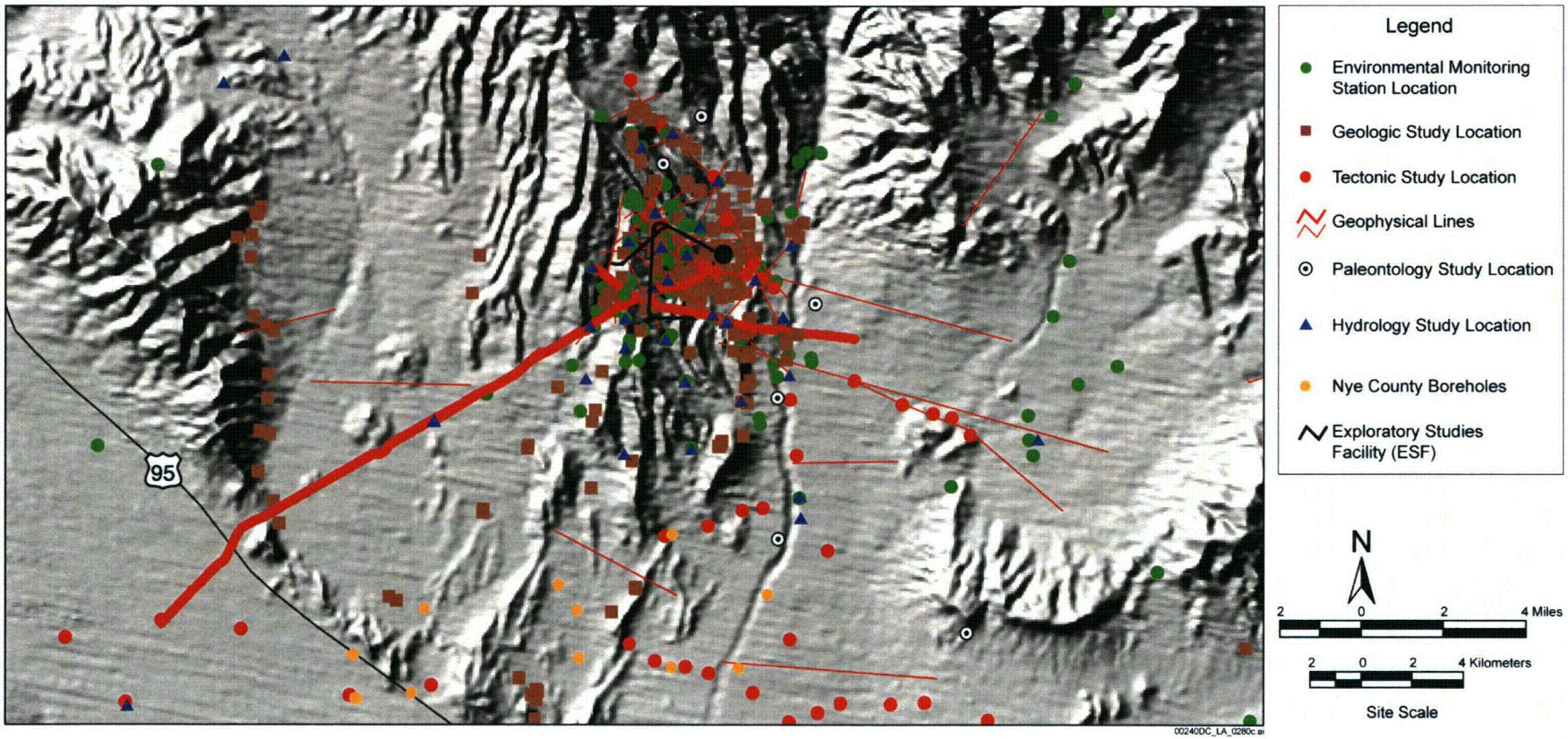

GI Figure 5-4

GI-5 Site Characterization

(continued)

- **Key points** (continued)
  - Host rock—Topopah Spring Tuff
  - Repository about 660 – 1,600 ft beneath ground surface
  - Repository about 1,000-ft above water table
  - Stable welded and nonwelded volcanic tuffs about 11–14 million years old
  - Repository block located away from Quaternary faults

Lithostratigraphic Unit		Major Hydrogeologic Unit	Detailed Hydrogeologic Unit	Unsaturated Zone Model Layer	Thermal-Mechanical Units
Alluvium and Colluvium	Qal, Qc	Unconsolidated Surface Material			Undifferentiated Overburden (UO)
Rainier Mesa Tuff	Tmr				
Pre-Rainier Mesa Tuff bedded tuff					
Rhyolite of Comb Peak					
Tuff Unit "X"					
Rhyolite of Vent Pass					
Post-Tiva Canyon Tuff bedded tuff					
Tiva Canyon Tuff	Tpcr	Tiva Canyon welded (TCw)	CCR, CUC	tcw11	Tiva Canyon welded (TCw)
	Tpcp		CUL, CW	tcw12	
	Tpcpv3		CMW	tcw13	
	Tpcpv2	Paintbrush nonwelded (PTn)			Paintbrush nonwelded (PTn)
	Tpcpv1		CNW	ptn21	
Bedded Tuff	Tpbt4		BT4	ptn22	
Yucca Mountain Tuff	Tpy		TPY	ptn23	
Bedded Tuff	Tpbt3		BT3	ptn24	
Pah Canyon Tuff	Tpp		TPP	ptn25	
Bedded Tuff	Tpbt2		BT2	ptn26	
	Tptrv3				
	Tptrv2				
	Tptrv1	Topopah Spring welded (TSw)	TC	tsw31	Topopah Spring welded, "lithophysae rich" (TSw1)
	Tptrn		TR	tsw32	
	Tptrl		TUL	tsw33	
Topopah Spring Tuff	Tptpul				Approximate Repository Horizon
	Tptpmn		TMN	tsw34	Topopah Spring welded, "lithophysae poor" (TSw2)
	Tptpll		TLL	tsw35	
			~~TM2 (upper 2/3)~~	~~tsw36~~	
	Tptpln		TM1 (lower 1/3)	tsw37	
	Tptpv3		PV3	tsw38	Topopah Spring welded, vitrophyre (TSw3)
	Tptpv2	Calico Hills nonwelded (CHn)	PV2	tsw39	Calico Hills nonwelded (CHn1)
	Tptpv1		BT1 or BT1 (altered)	ch1 (vit, zeo)	
Bedded Tuff	Tpbt1				
Calico Hills Formation	Tac		CHV (vitric) or CHZ (zeolitic)	ch2 (vit, zeo)	
				ch3 (vit, zeo)	
				ch4 (vit, zeo)	
				ch5 (vit, zeo)	
Bedded Tuff	Tacbt		BT	ch6	Calico Hills nonwelded (CHn2)
Prow Pass Tuff	Tcpuv		PP4 (zeolitic)	pp4	"Calico Hills" nonwelded (CHn3)
	Tcpuc		PP3 (devitrified)	pp3	Prow Pass welded (PPw)
	Tcpmd		PP2 (devitrified)	pp2	
	Tcplc				
	Tcplv		PP1 (zeolitic)	pp1	Upper Crater Flat nonwelded (CFUn)
Bedded Tuff	Tcpbt				
Bullfrog Tuff	Tcbuv	Crater Flat undifferentiated (CFu)			
	Tcbuc		BF3 (welded)	bf3	Bullfrog welded (BFw)
	Tcbmd				
	Tcblc				
	Tcblv		BF2 (nonwelded)	bf2	Middle Crater Flat nonwelded (CFMn)
Bedded Tuff	Tcbbt				
Tram Tuff	Tctuv				
	Tctuc		Not Available	tr3	Tram welded (TRw)
	Tctmd				
	Tctlc				
	Tctlv & below		Not Available	tr2	

00264DC_LA_0586b.ai

GI Figure 5-30

GI-5 Site Characterization (continued)

- **Key points** (continued)
  - 5-mile-long Exploratory Studies Facility
  - 2-mile-long cross drift through repository host rock units
  - Test alcoves and niches constructed and tested

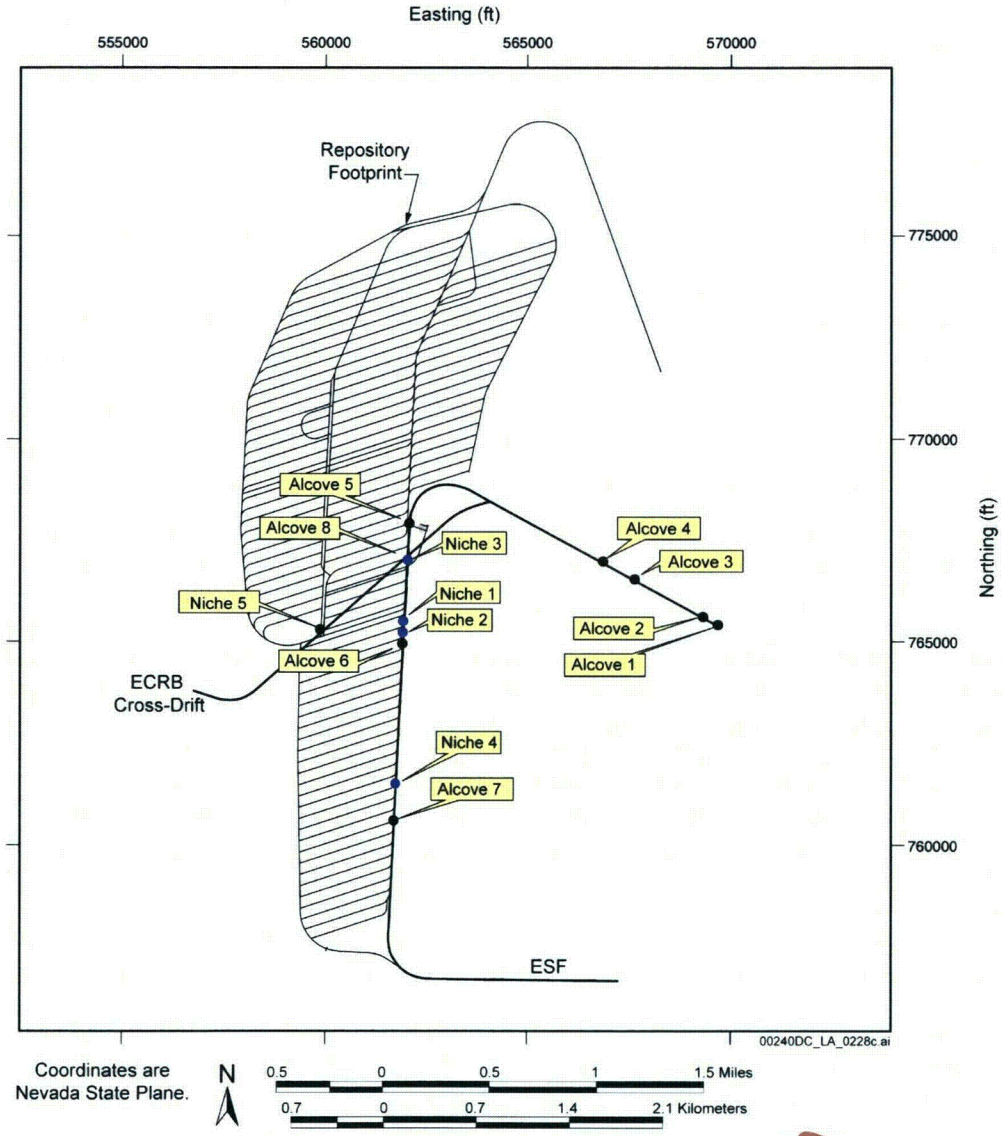

GI Figure 5-8

GI-5 Site Characterization (continued)

- **Key references**
  - ***Yucca Mountain Site Description***
  - **Other reports, primarily analysis and model reports (AMRs), providing information on results of various tests and studies**

Integration of Design and Postclosure Performance Assessment

- Performance assessment (SAR 2) uses repository design information (SAR 1.3 and 1.5)
- Performance assessment uses design control parameters (1) to support exclusion of features, events, and processes (FEPs) (SAR 2.2) and (2) to define parameters and conceptual models (SAR 2.3.X) given excluded and included FEPs
- Repository design controlled to meet constraints identified by performance assessment through design control parameters (SAR 1.9)
- Ability of design, working in combination with natural barriers, to meet postclosure performance objectives (10 CFR 63.113(b) and (c)) described in SAR 2.4

SAR 2 and 10 CFR 63

- Content addresses proposed 10 CFR 63, where appropriate
- Regulations addressed
  - Parts of 10 CFR 63.21 Content of Application
    - 10 CFR 63.21(c)(1)
    - 10 CFR 63.21(c)(1)(ii) to (iv)
    - 10 CFR 63.21(c)(9) to (15)
  - 10 CFR 63.113 Performance Objectives for Geologic Repository After Permanent Closure
  - 10 CFR 63.114 Requirements for Performance Assessment
  - 10 CFR 63.115 Requirements for Multiple Barriers
  - 10 CFR 63, Subpart L — Postclosure Public Health and Environmental Standards

SAR 2 Contents

2. Repository Safety After Permanent Closure

2.1 System Description and Demonstration of Multiple Barriers

2.2 Scenario Analysis and Event Probability

2.3 Model Abstraction

2.4 Demonstration of Compliance with the Postclosure Public Health and Environmental Standards

- 2.3.1 Climate and Infiltration
- 2.3.2 Unsaturated Zone Flow
- 2.3.3 Water Seeping into Drifts
- 2.3.4 Mechanical Degradation of the Engineered Barrier System
- 2.3.5 In-Drift Physical and Chemical Environment
- 2.3.6 Waste Package and Drip Shield Corrosion
- 2.3.7 Waste Form Degradation and Mobilization and Engineered Barrier System Flow and Transport
- 2.3.8 Radionuclide Transport in Unsaturated Zone
- 2.3.9 Saturated Zone Flow and Transport
- 2.3.10 Biosphere Transport and Exposure
- 2.3.11 Igneous Activity

Elements generally aligned with NUREG–1804, *Yucca Mountain Review Plan*

Summary of Postclosure Safety Analysis in License Application

- Postclosure safety analysis
  - Summarizes results of scientific analyses of geology, geohydrology, geochemistry and geomechanics at Yucca Mountain over more than 20 years
  - Summarizes scientific analyses of waste forms to be disposed and bases for performance of engineered materials
  - Provides analyses of expected performance and uncertainty using planned repository design and site information and identifies barriers significant to isolation of waste
- Performance confirmation designed to confirm adequacy of assumptions, data, and analyses that support postclosure safety analysis

U.S. Department of Energy
Office of Civilian Radioactive Waste Management

www.ocrwm.doe.gov

Presentation/Organization of Performance Assessment in Safety Analysis Report

Presented to:
U.S. Nuclear Regulatory Commission

Presented by:
Peter Swift
Chief Scientist, Yucca Mountain Project Lead Laboratory
Sandia National Laboratories

June 20, 2008
Rockville, Maryland

Presentation Outline

- SAR 2.1 System Description and Demonstration of Multiple Barriers
- SAR 2.2 Scenario Analysis and Event Probability
- Introduction to SAR 2.3 Model Abstraction
- Individual SAR 2.3.1 through 2.3.11 (i.e., 2.3.X) sections organized by barriers, disruptive events, and biosphere
- SAR 2.4 Demonstration of Compliance with the Postclosure Public Health and Environmental Standards

SAR 2.1 System Description and Multiple Barriers

- Contents
  - Identification of barriers
    - SAR Table 2.1-1 identifies important-to-waste-isolation (ITWI) features / components supporting three barriers
  - Barrier capability description
    - SAR Tables 2.1-2 through 2.1-4 summarize features, events, and processes (FEPs) affecting capability of three barriers
  - Technical bases for barrier capability
    - SAR Table 2.1-5 outlines mapping of barriers, performance assessment models, and relevant SAR sections

10 CFR 63.21(c)(9)
10 CFR 63.21(c)(14)
10 CFR 63.113(a)
10 CFR 63.115

SAR 2.1 System Description and Multiple Barriers

(continued)

3 Barriers

Upper Natural Barrier

Engineered Barrier System (EBS)

Lower Natural Barrier

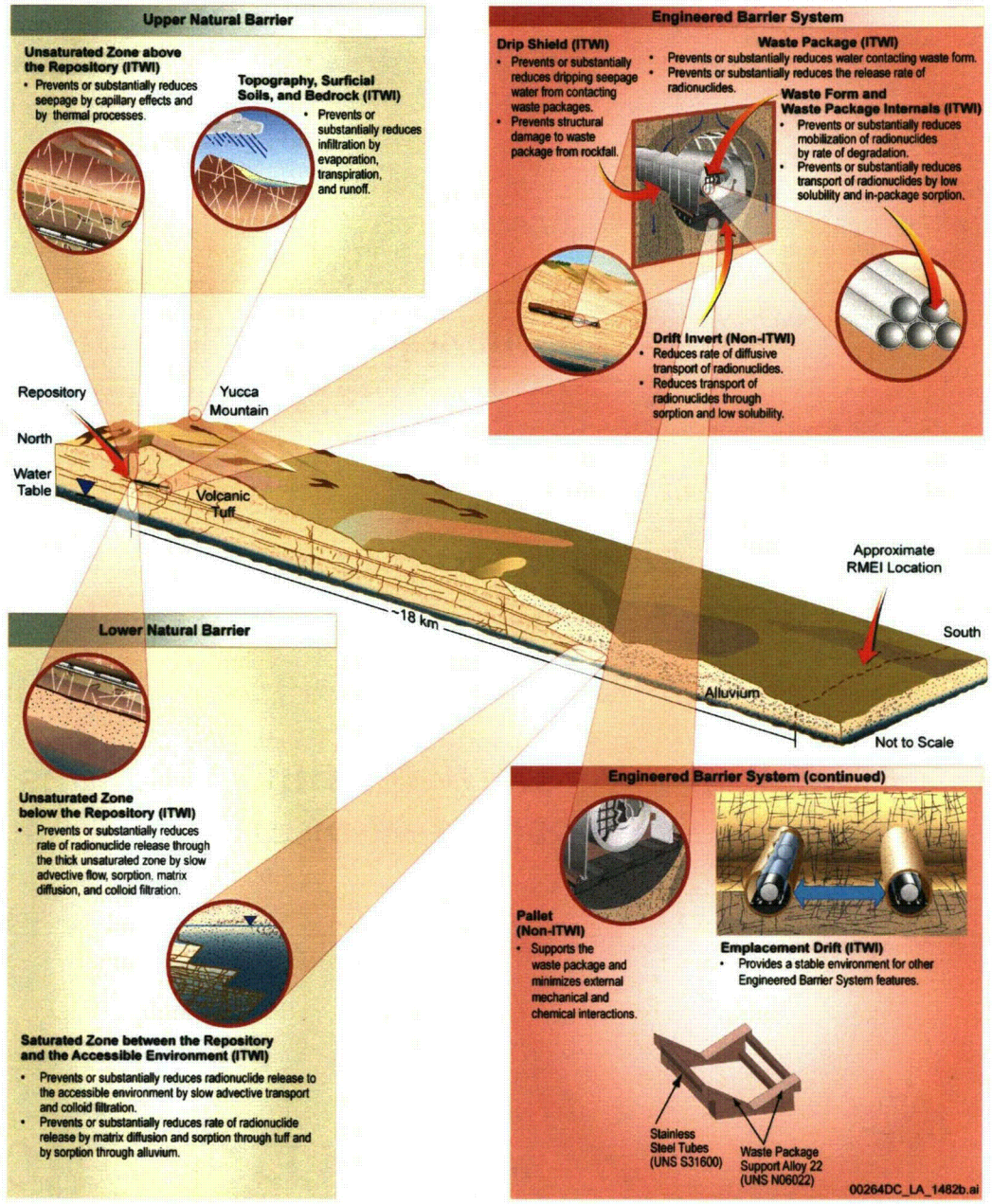

SAR Figure 2.1-1

SAR 2.1 System Description and Multiple Barriers (continued)

- Key points
  - Provides risk-informed bases for ITWI barrier features; also discussed in SAR 1.9
    - Feature must be associated with characteristic that contributes to barrier's capability
    - Feature must be significant contributor to barrier capability relative to other features
    - Control of criticality
  - Barrier capability description
    - Includes evaluation of time period over which barriers function
    - Includes evaluation of uncertainty associated with barrier capability
    - Understanding of barrier capability provides part of bases for determination of activities in performance confirmation program described in SAR 4

SAR 2.1 System Description and Multiple Barriers (continued)

- **Key points** (continued)
  - **Barrier capability description** (continued)
    - **Analysis for EBS and lower natural barrier radionuclide specific**
    - **FEPs marked as "processes and characteristics that are important to the capability of the barrier" in SAR Tables 2.1-2 through 2.1-4 considered to be important to capability of the barriers with respect to definition of "barrier" in 10 CFR 63.2**
  - **Technical basis of barrier capability consistent with total system performance assessment (TSPA)**
    - **Parameters and models used in quantification of barrier capability same as those presented in SAR 2.3**
- **Key references**
  - ***Postclosure Nuclear Safety Design Bases***
  - ***Total System Performance Assessment Model/Analysis for the License Application***

SAR 2.2 Scenario Analysis and Event Probability

- Contents
  - Analyses of FEPs and scenario classes
    - FEPs identification and classification
    - FEPs screening
    - Event class and scenario class formation
    - Screening of scenario classes and event classes
  - Events with probabilities greater than 1 chance in 10,000 of occurring in 10,000 years
    - Seismic activity
    - Igneous activity
    - Early waste package (WP) and drip shield (DS) failures
  - Human intrusion

10 CFR 63.21(c)(1)
10 CFR 63.21(c)(9)
10 CFR 63.114(a)(1), (2), (4)–(7)
10 CFR 63.114(b)

SAR 2.2 Scenario Analysis and Event Probability (continued)

- Key points
  - Addresses "What can happen?" and "How likely is it?" portions of the risk triplet
  - 374 FEPs evaluated
  - Linkage to international FEPs list via *Features, Events, and Processes: Analyses*
  - SAR Table 2.2-1 arranged by FEP number
  - SAR Table 2.2-2 arranged by feature (similar to SAR Tables 2.1-2 through 2.1-4)
  - SAR Table 2.2-3 identifies representative FEPs whose screening basis relies in part on design control parameters identified in SAR 1.9
  - Exclusion justifications
    - Criticality summarized in SAR 2.2.1.4.1 (similar to SAR 1.14 for preclosure)
    - All others in *Features, Events, and Processes: Analyses*

SAR 2.2 Scenario Analysis and Event Probability (continued)

- **Key points** (continued)
  - **Map of included FEPs to SAR model abstraction sections (SAR Table 2.2-5)**
    - **FEP name and description**
    - **Screening decision—whether FEP included or excluded**
    - **Applicable performance assessment standard for included FEPs**
    - **Mapping of included FEPs to section/table where technical basis summarized**

Table 2.2-5. Complete Listing of FEPs Considered

No.	FEP Name	FEP Description	Screening Decision	Section/Table or Location Where Technical Basis Is Summarized
0.1.02.00.0A	Timescales of Concern	This FEP addresses the timescales of concern over which the disposal system may present a significant health or environmental hazard.	Included 10 CFR 63.311 (proposed) 10 CFR 63.321 (proposed) 10 CFR 63.331	Table 2.2-4

00636PR_225_layout.psd

SAR 2.2 Scenario Analysis and Event Probability (continued)

Scenario class formation based on retained events identified in SAR 2.2.2; human intrusion considered separately

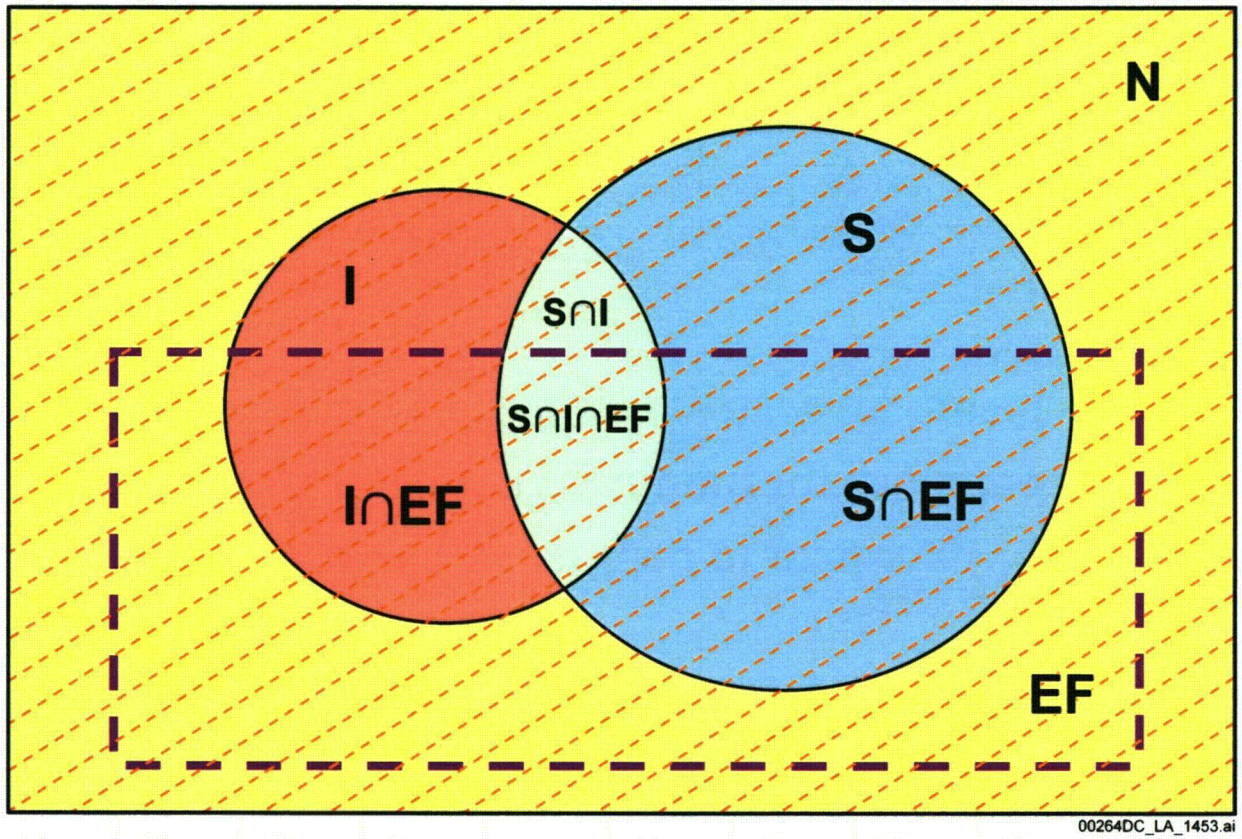

Legend

- EF = early WP and DS failure
- I = igneous
- N = nominal
- S = seismic

SAR Figure 2.2-3

Note: The size of the areas are not representative of probability of occurrence; probability of occurrence varies over time

SAR 2.2 Scenario Analysis and Event Probability (continued)

- **Key points** (continued)
  - **Discussion of probabilistic volcanic hazard analysis (PVHA) and probabilistic seismic hazard analyses (PSHA) results**
- **Key references**
  - ***Features, Events, and Processes for the Total System Performance Assessment: Methods***
  - ***Features, Events, and Processes for the Total System Performance Assessment: Analyses***
  - ***Probabilistic Seismic Hazard Analyses for Fault Displacement and Vibratory Ground Motion at Yucca Mountain, Nevada***
  - ***Peak Ground Velocities for Seismic Events at Yucca Mountain, Nevada***

SAR 2.2 Scenario Analysis and Event Probability (continued)

- **Key references** (continued)
  - ***Probabilistic Volcanic Hazard Analysis for Yucca Mountain, Nevada***
  - ***Analysis of Mechanisms for Early Waste Package/Drip Shield Failure***

Introduction to SAR 2.3
Model Abstraction

- 2.3.X sections organized approximately according to water flow through mountain
- 14 sections for model abstractions in NUREG–1804, *Yucca Mountain Review Plan* (YMRP) versus 11 SAR sections
- Four shared sections of YMRP (i.e., two or more SAR 2.3.X sections address single YMRP section in significant manner)

Four Shared Sections of YMRP

YMRP Section	SAR Section
2.2.1.3.1 Degradation of Engineered Barriers	2.3.6 Waste Package and Drip Shield Corrosion 2.3.7 Waste Form Degradation and Mobilization and Engineered Barrier System Flow and Transport SAR 2.2.1 and 2.4.2 to lesser degree
2.2.1.3.2 Mechanical Disruption of Engineered Barriers	2.3.4 Mechanical Degradation of the Engineered Barrier System 2.3.6 Waste Package and Drip Shield Corrosion SAR 2.2.1, 2.3.7, 2.3.11, and 2.4.2 to lesser degree
2.2.1.3.3 Quantity and Chemistry of Water Contacting Engineered Barriers and Waste Forms Detailed discussion of which SAR sections address each acceptance criterion for YMRP 2.2.1.3.3 in SAR 2.3.5	2.3.3 Water Seeping into Drifts 2.3.5 In-Drift Physical and Chemical Environment 2.3.7 Waste Form Degradation and Mobilization and Engineered Barrier System Flow and Transport SAR 2.2.1, 2.3.4, 2.3.6, 2.3.11, and 2.4.2 to lesser degree
2.2.1.3.13 Redistribution of Radionuclides in Soil	2.3.10 Biosphere Transport and Exposure 2.3.11 Igneous Activity

Shared YMRP sections discussed in SAR 2.3 introduction

YMRP Acceptance Criteria Reflected in SAR 2.3.X General Structure

YMRP

- AC 1 System Description and Model Integration Are Adequate
- AC 2 Data Is Sufficient for Model Justification
- AC 3 Data Uncertainty Is Characterized and Propagated Through the Model Abstraction
- AC 4 Model Uncertainty Is Characterized and Propagated Through the Model Abstraction
- AC 5 Model Abstraction Output Is Supported by Objective Comparisons

SAR 2.3.X

- Conceptual description
- Data and data uncertainty
- Model and model uncertainty
- Abstraction

AC = Acceptance Criteria

Common Elements of SAR 2.3.X Sections

- **Identification of included FEPs (usually SAR Table 2.3.X-1)**

Table 2.3.3-1. Features, Events, and Processes Addressed in Section 2.3.3

FEP Number and FEP Name	FEP Description	Summary of Technical Basis and Approach for FEP Inclusion
1.1.02.02.0A Preclosure ventilation	The duration of preclosure ventilation acts together with waste package spacing (as per design) to control the extent of the boiling front (zone of reduced water content).	The effects of preclosure ventilation on seepage are accounted for through the calculation of time-dependent thermal conditions in the drift, which affect drift-wall temperature and, thus, the duration of thermal seepage. The ventilation model provides the basis for estimating the fraction of heat removed during the 50-year [illegible] emplacement.

00636PR_2331_layout.psd

- **Summary discussions in *Conclusions* of each SAR 2.3.X**
  - **Relevant FEPs identified in SAR 2.1 as important to barrier capability; also discussed in *Summary and Overview* section**
  - **Important parameters and parameter uncertainty propagated to TSPA as well as discussion of model uncertainty**
  - **Summary of key conservatisms**
  - **Summary of consistency between model abstraction(s) and process model(s)**

Common Elements of SAR 2.3.X Sections

(continued)

- **Figures showing information flow (typically at beginning of figure section)**

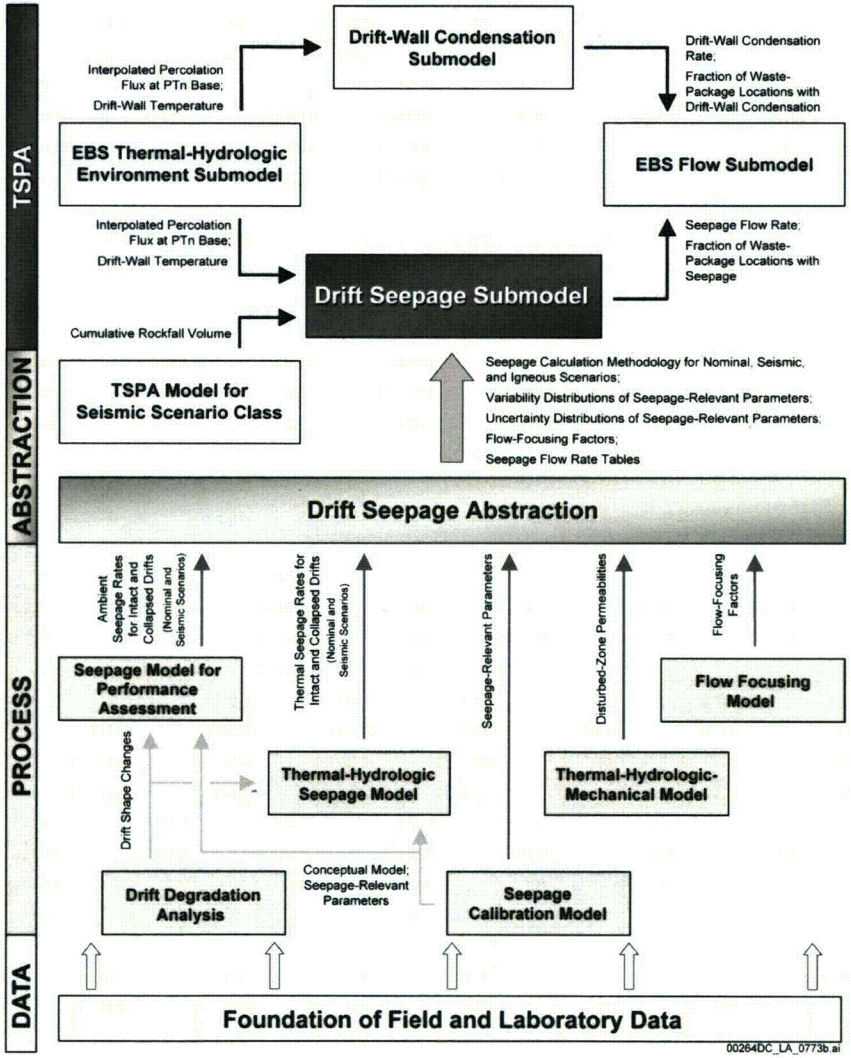

Example

SAR Figure 2.3.3-1

Crosswalk between SAR 2.3.X and SAR 2.4

SAR Table 2.3-1

Note: SAR 2.3.4 and 2.3.11 on page 2 of table

Table 2.3-1. Model Abstraction Topics and TSPA Model Components Crosswalk

Model Abstraction Areas (Section 2.3)	TSPA Model Components (Section 2.4)	TSPA Submodels (Section 2.4)
Climate and Infiltration (Section 2.3.1)	Unsaturated Zone Flow	Climate
		Infiltration
Unsaturated Zone Flow (Section 2.3.2)		Unsaturated Zone Flow Fields
Water Seeping into Drifts (Section 2.3.3)		Drift Seepage
In-Drift Physical and Chemical Environment (Section 2.3.5)		Drift Wall Condensation
	EBS Environment	EBS Thermal-Hydrologic Environment
		EBS Chemical Environment
Waste Package and Drip Shield Corrosion (Section 2.3.6)	Waste Package and Drip Shield Degradation	Waste Package and Drip Shield Degradation
Waste Form Degradation and Mobilization and EBS Flow and Transport (Section 2.3.7)	Waste Form Degradation and Mobilization	Radionuclide Inventory
		In-Package Chemistry
		Cladding Degradation
		Waste Form Degradation
		Dissolved Concentration Limits
		EBS Colloids
	EBS Flow and Transport	EBS Flow
		EBS Transport
		EBS-Unsaturated Zone Interface
Radionuclide Transport in Unsaturated Zone (Section 2.3.8)	Unsaturated Zone Transport	Unsaturated Zone Transport
Saturated Zone Flow and Transport (Section 2.3.9)	Saturated Zone Flow and Transport	Saturated Zone Flow and Transport
Biosphere Transport and Exposure (Section 2.3.10)	Biosphere	Biosphere

00636PR_Table231.psd

Upper Natural Barrier
SAR 2.3.1 Climate and Infiltration

- Contents
  - Climate
    - Paleoclimate data and climate analogue sites
  - Infiltration
    - Description of infiltration model, model results, and confidence building
- Key points
  - Climate
    - Data include paleoclimate data from Owens Lake and Devils Hole
    - Three climate states for pre-10,000 years evaluated
    - Duration of climate states established

10 CFR 63.21(c)(1)(iii)
10 CFR 63.21(c)(9)
10 CFR 63.21(c)(15)
10 CFR 63.114(a)(1)–(5), (7)
10 CFR 63.114(b)

Upper Natural Barrier
SAR 2.3.1 Climate and Infiltration (continued)

- **Key points** (continued)
  - Infiltration
    - Data include digitized topographic, landsat, geologic, and soil maps; soil and bedrock hydrologic properties; and meteorological data
    - Post-10,000-year infiltration evaluated consistent with proposed 10 CFR 63
- **Key references**
  - *Future Climate Analysis*
  - *Simulation of Net Infiltration for Present-Day and Potential Future Climates*

Upper and Lower Natural Barrier
SAR 2.3.2 Unsaturated Zone Flow

- **Contents**
  - Description of site-scale unsaturated zone (UZ) flow model
  - Model bases and analyses of results
- **Key points**
  - Data from in situ boreholes include hydrogeologic properties, thermal and other geophysical conditions and properties; water chemistry, gas pressure, liquid saturation, and water potential of the rocks; additional data gathered from test alcoves and niches within the ESF, the ECRB Cross-Drift, and Busted Butte
  - Calibration of water flux uncertainty at the upper boundary of site-scale UZ flow model led to weighting factors for UZ flow fields
  - Post-10,000-year percolation rate uncertainty distribution over repository footprint as defined by proposed 10 CFR 63
- **Key reference**
  - *UZ Flow Models and Submodels*

10 CFR 63.21(c)(1)(ii)
10 CFR 63.21(c)(9)
10 CFR 63.21(c)(15)
10 CFR 63.114(a)(1)–(5), (7)
10 CFR 63.114(b)

Upper Natural Barrier
SAR 2.3.3 Water Seeping into Drifts

- **Contents**
  - Models for ambient and thermal seepage
  - Model bases and analyses of results
- **Key points**
  - Data include results from niche tests, thermal testing including the Drift Scale Test, and in situ borehole testing
  - Design information and control parameters from SAR 1.3 and summarized in SAR 1.9 are used in SAR 2.3.3 (Table 2.2-3), e.g., repository layout, emplacement drift configuration and spacing, various aspects of ventilation
  - Models evaluate seepage-relevant processes near emplacement drifts for a range of repository conditions
- **Key reference**
  - *Abstraction of Drift Seepage*

10 CFR 63.21(c)(1)(ii)
10 CFR 63.21(c)(9)
10 CFR 63.21(c)(15)
10 CFR 63.114(a)(1)–(5), (7)
10 CFR 63.114(b)

Engineered Barrier System
SAR 2.3.5 In-Drift Physical and Chemical Environment

- **Contents**
  - Approach to coupled processes
  - Near-field chemistry model
  - In-drift thermal-hydrologic environment models
  - In-drift chemical environment models
- **Key points**
  - Data include pore water and gas chemistry, thermodynamic data, thermal testing results including from the Drift Scale Test, and various hydrologic and thermal properties
  - Design information and control parameters from SAR 1.3 and 1.5 and summarized in 1.9 are used in SAR 2.3.5 (Table 2.2-3), e.g., repository layout, committed materials, various thermal parameters

10 CFR 63.21(c)(1)(ii)
10 CFR 63.21(c)(9)
10 CFR 63.21(c)(10)
10 CFR 63.21(c)(15)
10 CFR 63.114

Engineered Barrier System
SAR 2.3.5 In-Drift Physical and Chemical Environment (continued)

- **Key points** (continued)
  - Models described in SAR 2.3.5.3 through 2.3.5.5 provide evolution of in-drift physical and chemical environment with time to TSPA
  - SAR 2.3.5.2 provides consolidated discussion of evaluation of coupled processes for near-field host rock and EBS
    - Thermal-hydrologic effects included in TSPA
    - Thermal-hydrologic-chemical effects included for water chemistry
    - Thermal-hydrologic-mechanical effects excluded
  - Hydrogeologic, geomechanical, and geochemical responses to anticipated range of thermal loading have been evaluated (SAR 2.3.5.4); consistent with thermal management strategy described in SAR 1.3.1

Engineered Barrier System
SAR 2.3.5 In-Drift Physical and Chemical Environment (continued)

- **Key references**
  - ***Multiscale Thermohydrologic Model***
  - ***In-Drift Natural Convection and Condensation***
  - ***Postclosure Analysis of the Range of Design Thermal Loadings***
  - ***Engineered Barrier System: Physical and Chemical Environment***

Engineered Barrier System
SAR 2.3.6 WP and DS Corrosion

- Contents
  - General and localized corrosion of WP
  - Stress corrosion cracking of WP
  - Early failure of WPs and DSs
  - DS general corrosion
- Key points
  - Data include long-term weight-loss measurements, open-circuit corrosion potential data; cyclic polarization data; and Alloy 22 data for threshold stress for crack initiation, crack growth rates, stress and stress intensity factor profiles of the welded regions, and weld flaw data
  - Design information and control parameters from SAR 1.2, 1.3, 1.5, and summarized 1.9 used in SAR 2.3.6 (Table 2.2-3), e.g., various aspects of WP and DS design, fabrication, handling, closure, and inspection

10 CFR 63.21(c)(9)
10 CFR 63.21(c)(15)
10 CFR 63.114

Engineered Barrier System
SAR 2.3.6 WP and DS Corrosion (continued)

- **Key points** (continued)
  - Models/analyses in SAR 2.3.6 support TSPA calculations of time-dependent degradation of WP and DS; early failure also included
  - Some degradation mechanisms discussed are excluded from TSPA (e.g., thermal aging of Alloy 22 and various degradation mechanisms of DS, except for general corrosion and early failure which are included)
- **Key references**
  - *General Corrosion and Localized Corrosion of Waste Package Outer Barrier*
  - *Stress Corrosion Cracking of Waste Package Outer Barrier and Drip Shield Materials*
  - *General Corrosion and Localized Corrosion of the Drip Shield*
  - *Analysis of Mechanisms for Early Waste Package/Drip Shield Failure*

Engineered Barrier System

SAR 2.3.7 Waste Form Degradation and Mobilization and EBS Flow and Transport

- Contents
  - Radionuclide inventory
  - In-package water chemistry
  - Degradation of commercial spent nuclear fuel (SNF) and DOE SNF
  - High-level radioactive waste glass dissolution
  - Dissolved concentration limits
  - Colloidal radionuclide availability
  - EBS flow and transport model

10 CFR 63.21(c)(1)(ii)
10 CFR 63.21(c)(9)
10 CFR 63.21(c)(15)
10 CFR 63.114

Engineered Barrier System

SAR 2.3.7 Waste Form Degradation and Mobilization and EBS Flow and Transport (continued)

- Key points
  - Data include the masses, surface areas, and degradation rates of the fuels, waste glass, and steels in the WP; thermodynamic data; study results regarding colloid concentrations, colloid suspension stability, and radionuclide sorption properties
  - Design information and control parameters from SAR 1.3 and 1.5 and summarized in 1.9 are used in SAR 2.3.7 (Table 2.2-3), e.g., committed materials, WP dimensions, and DS design and installation
  - Processes evaluated include those initiated by water entry into WP, degradation of WP internals and waste form, and mobilization of radionuclides
  - Models support TSPA calculation of radionuclide concentration in water and transport through EBS
  - Discussion presented of commercial SNF cladding degradation and how it is bounded in the TSPA

Engineered Barrier System

SAR 2.3.7 Waste Form Degradation and Mobilization and EBS Flow and Transport (continued)

- **Key references**
  - ***Radionuclide Screening***
  - ***Initial Radionuclide Inventories***
  - ***In-Package Chemistry Abstraction***
  - ***Dissolved Concentration Limits of Elements with Radioactive Isotopes***
  - ***EBS Radionuclide Transport Abstraction***

Lower Natural Barrier
SAR 2.3.8 Radionuclide Transport in UZ

- **Contents**
  - Description of UZ transport model
  - Model bases and analysis of results
- **Key points**
  - Laboratory data include sorption and matrix diffusion measurements; also discussion of Busted Butte tests, Alcove 8–Niche 3 tests, and Alcove 1 tests, which establishes basic conceptual framework of transport
  - Evaluation of matrix diffusion, sorption, advective transport through fractures and matrix, and colloid transport
- **Key reference**
  - *Particle Tracking Model and Abstraction of Transport Processes*

10 CFR 63.21(c)(1)(ii)
10 CFR 63.21(c)(9)
10 CFR 63.21(c)(15)
10 CFR 63.114(a)(1)–(5), (7)
10 CFR 63.114(b)

Lower Natural Barrier

SAR 2.3.9 Saturated Zone Flow and Transport

- Contents
  - Description of saturated zone flow and transport experiments and model
  - TSPA abstraction and analysis of results
- Key points
  - Data include results from laboratory sorption and matrix diffusion tests, C-Wells and Nye County field tests, in situ boreholes including groundwater levels, water chemistry, flowing interval spacing, and hydrologic parameters
  - Evaluation of matrix diffusion, sorption, advection, dispersion, colloid-facilitated transport, decay and ingrowth, present and future climate effects
- Key reference
  - *Saturated Zone Flow and Transport Model Abstraction*

10 CFR 63.21(c)(1)(ii)
10 CFR 63.21(c)(9)
10 CFR 63.21(c)(15)
10 CFR 63.114(a)(1)–(5), (7)
10 CFR 63.114(b)

Disruptive Events

SAR 2.3.4 Mechanical Degradation of the EBS

- Contents
  - Description of ground motion for postclosure analyses and comparison to ground motion for preclosure analyses (SAR 1.1.5)
  - Description of rockfall and drift collapse analyses
  - Description of models and results for structural response of EBS features to ground motion and fault displacement
  - Description of the seismic damage abstractions for seismic scenario class in TSPA
- Key points
  - Data include displacement history data, seismic time histories, dynamic material properties; mechanical and thermal properties of intact rock and fractures; and data from the ESF and the ECRB Cross-Drift, e.g., geologic observations of fractures and lithophysae

10 CFR 63.21(c)(1)(ii)
10 CFR 63.21(c)(9)
10 CFR 63.21(c)(15)
10 CFR 63.114

Disruptive Events

SAR 2.3.4 Mechanical Degradation of the EBS

(continued)

- **Key points** (continued)
  - Design information and control parameters from SAR 1.3 and 1.5 and summarized in 1.9 are used in SAR 2.3.4 (Table 2.2-3), e.g., design rock properties, design and in-drift configuration of WP, DS, emplacement pallet, and invert
  - Analyses use a mean ground motion hazard that reflects a reasonable bounding distribution on extreme ground motions consistent with Yucca Mountain geologic setting
  - Rockfall and drift collapse analyses presented include thermal-mechanical and dynamic response of lithophysal and nonlithophysal fractured rock units
  - Drift collapse due to seismic ground motion included in TSPA; rockfall due to nominal processes (i.e., in situ and thermally induced stresses as well as time-dependent rock mass strength degradation) excluded

Disruptive Events

SAR 2.3.4 Mechanical Degradation of the EBS

(continued)

- **Key points** (continued)
  - Seismic damage analysis evaluates failure modes and evolution of damage to EBS over time
    - Includes general corrosion of structural components, degradation of WP internals after breach, and time-dependent rockfall loads
    - Both transportation, aging and disposal canister-bearing and codisposal WP types explicitly considered
  - Primary focus of the analysis is damage to the WP and DS
- **Key references**
  - *Seismic Consequence Abstraction*
  - *Drift Degradation Analysis*

Disruptive Events
SAR 2.3.11 Igneous Activity

- Contents
  - Igneous activity characteristics and hazard
  - Igneous intrusion modeling case
  - Volcanic eruption modeling case
- Key points
  - Data include field observations of igneous dike characteristics; Aeromagnetic survey of Crater Flat, Yucca Mountain, Jackass Flats, and the northern part of Amargosa Desert; geomorphic studies of Fortymile Wash; and PVHA results
  - For igneous intrusion modeling case, all WPs assumed to fail and radionuclide transport begins when seepage re-established
  - Volcanic eruption contingent upon a dike intersecting the repository (i.e., igneous intrusion)

10 CFR 63.21(c)(1)(ii)
10 CFR 63.21(c)(9)
10 CFR 63.21(c)(15)
10 CFR 63.114

Disruptive Events
SAR 2.3.11 Igneous Activity (continued)

- **Key points** (continued)
  - Volcanic eruption modeling case features aerial dispersal of waste entrained in eruption column followed by redistribution of contaminated tephra
- **Key references**
  - *Characterize Framework for Igneous Activity at Yucca Mountain, Nevada*
  - *Characterize Eruptive Processes at Yucca Mountain, Nevada*
  - *Number of Waste Packages Hit by Igneous Events*
  - *Dike/Drift Interactions*
  - *Atmospheric Dispersal and Deposition of Tephra from a Potential Volcanic Eruption at Yucca Mountain, Nevada*
  - *Redistribution of Tephra and Waste by Geomorphic Processes Following a Potential Volcanic Eruption at Yucca Mountain, Nevada*

Biosphere

SAR 2.3.10 Biosphere Transport and Exposure

- Contents
  - Description of biosphere model
    - Environmental transport of radionuclides from groundwater and volcanic eruption releases from repository
    - Exposure of reasonably maximally exposed individual (RMEI)
  - Biosphere model results—
    biosphere dose conversion factors (BDCFs)
- Key points
  - Data include soil properties; weather data; agricultural data; information characterizing lifestyle, diet, and metabolic and physiological considerations; mass loading data
  - Site-specific conditions in Yucca Mountain region incorporated in reference biosphere
  - Lifestyle of people living in Amargosa Valley incorporated in representation of RMEI

10 CFR 63.21(c)(1)(iv)
10 CFR 63.21(c)(9)
10 CFR 63.21(c)(15)
10 CFR 63.114(a)(1)–(5), (7)
10 CFR 63.114(b)
10 CFR 63.305
10 CFR 63.312

Biosphere

SAR 2.3.10 Biosphere Transport and Exposure

(continued)

- **Key points** (continued)
  - Model incorporates multiple pathways of radionuclide transport in accessible environment and RMEI exposure pathways
  - Separate models for groundwater release and for volcanic eruption release of radionuclides
  - BDCFs are combined in the TSPA model with radionuclide concentrations in groundwater and in soil mixed with volcanic tephra to produce dose to RMEI
  - Appendix A of proposed 40 CFR 197 is used for calculating effective dose equivalent, as defined in proposed 10 CFR 63.2
- **Key reference**
  - *Biosphere Model Report*

SAR 2.4

Demonstration of Compliance with the Postclosure Public Health and Environmental Standards

- **Contents**
  - Description of TSPA model and quantitative results
  - Description of scenario classes and modeling cases
  - Treatment of uncertainty
  - Model confidence building
  - Three compliance standards
- **Key points**
  - Addresses "What are the consequences?" portion of risk triplet
  - TSPA model integrates the abstractions from all SAR 2.3.X sections
  - Description of TSPA model, submodels, and information feeds between submodels
  - Figures in SAR 2.4 identify information feeds; same figures found in SAR 2.3.X sections to provide integration across SAR 2

10 CFR 63.21(c)(11)–(13), (15)
10 CFR 63.113(b)–(d)
10 CFR 63.114
10 CFR 63.303
10 CFR 63.311
10 CFR 63.312
10 CFR 63.321
10 CFR 63.322
10 CFR 63.331
10 CFR 63.332
10 CFR 63.342

SAR 2.4

Demonstration of Compliance with the Postclosure Public Health and Environmental Standards (continued)

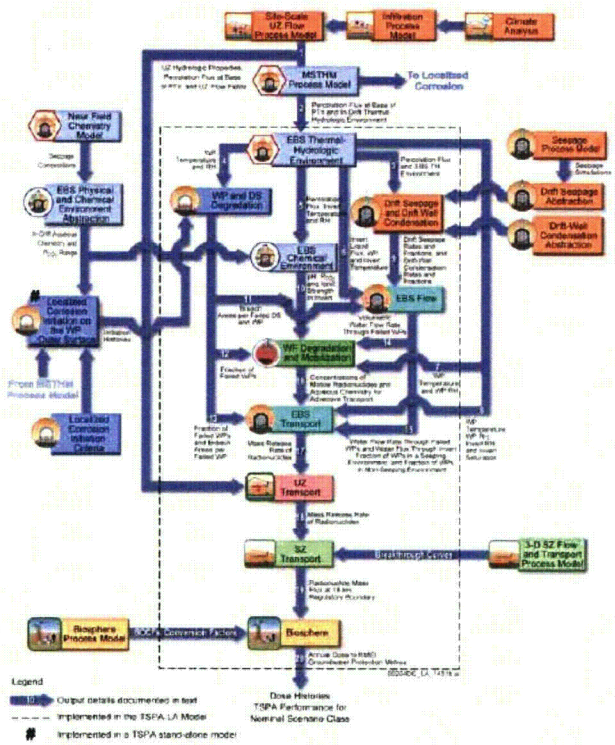

Flow diagrams identify information feeds between TSPA submodels and integrate across SAR 2
(Example SAR Figure 2.4-112)

- **Nominal**
  (SAR Figure 2.4-112)
- **Early WP and DS failure**
  (SAR Figure 2.4-114)
- **Igneous intrusion**
  (SAR Figure 2.4-115)
- **Volcanic eruption**
  (SAR Figure 2.4-116)
- **Seismic**
  (SAR Figure 2.4-117)
- **Human intrusion**
  (SAR Figure 2.4-158)

SAR 2.4

Demonstration of Compliance with the Postclosure Public Health and Environmental Standards (continued)

Table 2.4-1. TSPA Model Discretization

TSPA Principal Model Components	Submodel for TSPA	SAR Section	Abstraction/Process Model(s)/Analysis(es)	Reference
Unsaturated Zone Flow Model Component	UZ Flow Fields Abstraction	2.3.2	UZ Flow Fields Abstraction	UZ *Flow Models and Submodels* (SNL 2007b).
			Site-Scale UZ Flow Process Model	
			Active Fracture Model	
			Dual-Permeability UZ Flow Model	
	Infiltration Submodel	2.3.1	Infiltration Model Abstraction	*Simulation of Net Infiltration for Present-Day and Potential Future Climates* (SNL 2008g).
			Infiltration Process Model	
	Climate Submodel		Future Climate Analysis	*Future Climate Analysis* (BSC 2004c).
	Drift Seepage Submodel	2.3.3	Drift Seepage Abstraction	*Abstraction of Drift Seepage* (SNL 2007g).
			Drift Seepage Abstraction including Drift Collapse	*Seepage Model for PA Including Drift Collapse* (BSC 2004d).
			TH Seepage Process Model	
	Drift Wall Condensation Submodel	2.3.5	In-Drift Natural Convection and Condensation Process Model	*In-Drift Natural Convection and Condensation* (SNL 2007f).
			Drift Wall Condensation Abstraction	

00633PR_241_layout.psd

SAR Table 2.4-1

SAR 2.4

Demonstration of Compliance with the Postclosure Public Health and Environmental Standards (continued)

- **Key points** (continued)
  - Model confidence building
    - Verification of inputs and software
    - Stability testing
    - Uncertainty and sensitivity analyses
    - Corroboration of results with underlying process models
    - Corroboration with auxiliary analyses
      - Single realization analyses
      - Comparison with simplified TSPA analysis
      - Comparison with Electric Power Research Institute (EPRI) model
    - Natural and man-made analogues
    - Independent technical review

SAR 2.4

Demonstration of Compliance with the Postclosure Public Health and Environmental Standards (continued)

- **Key points** (continued)
  - Treatment of uncertainty
    - Aleatory and epistemic
    - Implementation in dose calculations
    - Regression analyses to evaluate significance of uncertain parameters
  - Development of equations for scenario classes and modeling cases
  - Quantitative results presented by modeling case

SAR 2.4

Demonstration of Compliance with the Postclosure Public Health and Environmental Standards (continued)

- **Key points** (continued)
  - **Results provided for three compliance standards**
    - **Proposed 10 CFR 63.311 Individual protection standard after permanent closure (SAR 2.4.2)**
    - **Proposed 10 CFR 63.321 Individual protection standard for human intrusion (SAR 2.4.3)**
    - **10 CFR 63.331 Separate standards for protection of groundwater (SAR 2.4.4)**

SAR Figures 2.3-2 and 2.4-1 (annotated)

SAR 2.4

Demonstration of Compliance with the Postclosure Public Health and Environmental Standards (continued)

- **Key points** (continued)
  - Results provided for three compliance standards (continued)
    - Individual and groundwater protection analyses
      - » Events/scenario classes retained based on probability (SAR 2.2.1.3.1, 2.4.1.2, 2.4.2.1)
      - » Retained events/scenario classes are the 4 TSPA scenario classes (leading to 7 TSPA modeling cases)
    - For human intrusion analysis, proposed 10 CFR 63.321 specifies what is to be considered in stylized analysis (SAR 2.2.1.3.2)
    - Results below limits for compliance standards (SAR Tables 2.4-2 through 2.4-4)
- **Key reference**
  - *Total System Performance Assessment Model/Analysis for the License Application*

U.S. Department of Energy
Office of Civilian Radioactive Waste Management

www.ocrwm.doe.gov

Presentation/Organization of Performance Confirmation in Safety Analysis Report

Presented to:
U.S. Nuclear Regulatory Commission

Presented by:
Peter Swift
Chief Scientist, Yucca Mountain Project Lead Laboratory
Sandia National Laboratories

June 20, 2008
Rockville, Maryland

SAR 4 Performance Confirmation Program

- Content
  - Program objectives and overview including program implementation, documentation, and evaluation of results and reporting
  - Performance confirmation program activity descriptions (20 activities)
    - General requirements monitoring, testing and inspection (11 activities)
    - Geotechnical and design monitoring, mapping and testing (4 activities)
    - Design testing other than waste packages (1 activity)
    - Monitoring and testing of waste packages (4 activities)

10 CFR 63.21(c)(17)
10 CFR 63.44
10 CFR 63.71–73
10 CFR 63.111(e)
10 CFR 63.131–134

SAR 4 Performance Confirmation Program (continued)

- Key points
  - Evaluates adequacy of information supporting compliance demonstrations of performance objectives in 10 CFR 63, Subpart E
    - Preclosure performance objectives in 10 CFR 63.111
    - Postclosure performance objectives in 10 CFR 63.113
  - Confirms adequacy of
    - Assumptions, data, and analyses that support findings used to permit construction of repository and waste emplacement
    - Description in SAR 2 of how natural and engineered barriers function (i.e., are they functioning as intended and anticipated)
    - Geotechnical and design assumptions that are basis for compliance with retrievability objective

SAR 4 Performance Confirmation Program (continued)

- **Key points** (continued)
  - Identifies provisional requirements for subsurface facility design to provide facilities for an observation drift and alcoves
  - Table 4-1 provides performance confirmation activity relationships to parameters, purpose, barrier, or event
  - Table 4-2 provides relationship of performance confirmation activities to 10 CFR 63, Subpart F — Requirements
- **Key reference**
  - *Performance Confirmation Plan*

U.S. Department of Energy
Office of Civilian Radioactive Waste Management

www.ocrwm.doe.gov

Programmatic Overview and General Information Topics

Presented to:
U.S. Nuclear Regulatory Commission

Presented by:
David Crawford
Director, Disposal Operations Office
Office of Civilian Radioactive Waste Management
U.S. Department of Energy

June 20, 2008
Rockville, Maryland

Programmatic Overview (17 LA Sections)

GI-1	General Description	10 CFR 63.21(b)(1)
GI-2	Proposed Schedule for Construction, Receipt, Emplacement of Waste	10 CFR 63.21(b)(2)
GI-3	Physical Protection Plan	10 CFR 63.21(b)(3)
GI-4	Material Control and Accounting Program	10 CFR 63.21(b)(4)
SAR 3	R&D Program to Resolve Safety Questions	10 CFR 63.21(c)(1)
SAR 5.0	Management Systems	----
SAR 5.1	Quality Assurance	10 CFR 63.21(c)(20)
SAR 5.2	Records, Reports, Tests, and Inspections	10 CFR 63.21(c)(23)
SAR 5.3	Training and Certification	10 CFR 63.21(c)(22)
SAR 5.4	Expert Elicitation	10 CFR 63.21(c)(19)

Programmatic Overview (17 LA Sections) (continued)

SAR 5.5	Plans for Initial Startup Activities and Testing	10 CFR 63.21(c)(22)(iv)
SAR 5.6	Plans and Procedures for Conduct of Normal Activities Including Operations, Maintenance, Surveillance, and Periodic Testing	10 CFR 63.21(c)(22)(v)
SAR 5.7	Emergency Planning	10 CFR 63.21(c)(21)
SAR 5.8	Controls to Restrict Access and Regulate Land Use	10 CFR 63.21(c)(24)
SAR 5.9	Uses of the GROA for Purposes Other than Disposal of Radioactive Waste	10 CFR 63.21(c)(22)(vii)
SAR 5.10	License Specifications	10 CFR 63.21(c)(18)
SAR 5.11	Operational Radiation Protection Program	10 CFR 63.21(c)(6)

Programs Under Development

- Some sections describe programs under development
  - SAR 5.5 startup testing program and testing procedures - will be available for NRC inspection 90 days prior to intended use
  - SAR 5.6 operating, maintenance, surveillance, and periodic testing procedures - will be available for NRC inspection prior to receipt of waste
- SAR 5.10 License Specifications also under development
  - Lists probable subjects of license specifications, including criteria for selection
  - Proposed license specifications will be submitted for NRC approval at the time of updating the license to receive and possess waste

Future Plan Submittals

- Physical protection plan described in GI-3*
  - Commitment to submit no later than 180 days after construction authorization issued
- Material control and accounting program plan described in GI-4*
  - Commitment to submit no later than 180 days after construction authorization issued
- Emergency plan described in SAR 5.7
  - Commitment to submit no later than six months prior to submittal of updated license application (LA) to receive and possess waste

*When Rulemaking (72 Federal Register 72522 and 73 Federal Register 10187) completed and effective DOE will comply, as appropriate

GI-1 General Description

- Contents
  - Location/geography/hydrology/meteorology/climate
  - Preclosure and Postclosure controlled area boundaries
  - Geologic repository operations area for surface and subsurface
  - Waste handling facilities, including aging
  - Material incorporated by reference (Quality Assurance Requirements and Description)
- Key points
  - Provides overview of repository design and operations
  - Points to other sections in LA where detailed information provided

10 CFR 63.21(b)(1)

GI-2 Proposed Schedules for Construction, Receipt, Emplacement

- Contents
  - Preliminary schedules
    - Site preparation
    - Construction
    - Waste receipt
    - Routine emplacement operations
- Key points
  - Construction and operation in four phases

10 CFR 63.21(b)(2)

GI-3 Physical Protection Plan – Contents

- General description of plan suitable for public disclosure
  - Performance objectives, goals, and strategies
  - Security organization
  - Physical barrier, access control detection and communication subsystems
  - Event reporting

10 CFR 63.21(b)(3)

GI-3 Physical Protection Plan – Key points

- Will accommodate phased construction and operations
- Will be operational and tested prior to receipt of spent nuclear fuel (SNF) and high-level radioactive waste (HLW)
- Will be provided to NRC no later than 180 days after receipt of construction authorization (CA)

GI-4 Material Control and Accounting Program – Contents

- General description of program suitable for public disclosure
  - Material balance, inventory, and record keeping
  - Material status and transfer reports
  - Event reporting

10 CFR 63.21(b)(4)

GI-4 Material Control and Accounting Program – Key Points

- Will accommodate phased construction and operations
- Will be operational and tested prior to receipt of SNF and HLW
- Will employ
  - Item accounting and physical inventories
  - Policies to assure quality of physical inventories
  - Periodic program assessments
  - Procedures/collusion protection/records
- Will be provided to NRC no later than 180 days after receipt of construction authorization

U.S. Department of Energy
Office of Civilian Radioactive Waste Management

www.ocrwm.doe.gov

Other Programmatic Topics in Safety Analysis Report

Presented to:
U.S. Nuclear Regulatory Commission

Presented by:
Daniel Kane
Regulatory Authority Office
Office of Civilian Radioactive Waste Management
U.S. Department of Energy

June 20, 2008
Rockville, Maryland

SAR 3 Research and Development Program to Resolve Safety Questions

- Contents
  - No unresolved safety questions identified
  - Should a safety question be identified, DOE will implement program to
    - Identify and describe safety question
    - Develop research and development program and schedule to resolve safety question
    - Identify alternative approaches if safety question cannot be resolved
- Key points
  - Separate and distinct from performance confirmation program

10 CFR 63.21(c)(16)

SAR 5 Management Systems Contents

- Section describes administrative and programmatic framework established by DOE that ties together SAR Chapter 5 programs
- Additional details are described for each in discussion that follows
- Configuration management also addressed in SAR 5
  - Provided throughout the design, construction, testing, operation and closure stages of repository
  - Establishes and maintains the technical baseline for repository based on clearly defined requirements
  - Implemented through procedures
  - After receipt of NRC Construction Authorization, proposed changes evaluated against criteria in 10 CFR 63.44

SAR 5 Management Systems Key Points

- Ensures activities maintained within analyzed basis
- Ensures protection of health and safety of workers, public and environment

SAR 5.1 Quality Assurance Contents

- Quality Assurance Requirements and Description (QARD)
  - QARD describes Quality Assurance requirements applicable to repository activities
  - Revision 20 submitted to NRC February 5, 2008
  - Addresses design and construction

10 CFR 63.21(c)(20)

SAR 5.1 Quality Assurance Key Points

- QARD incorporated into license application (LA) by reference
- QARD will be updated to address operations, permanent closure, and decontamination and dismantlement

10 CFR 63.21(c)(20)

SAR 5.2 Records, Reports, Tests and Inspections – Contents

- Describes
  - Records management process for creating and maintaining records
  - Process for evaluating deviations and failures to comply with requirements and reporting deficiencies
  - Process for performing tests NRC considers appropriate or necessary
  - How DOE will comply with NRC requirements for inspection

10 CFR 63.21(c)(23)

SAR 5.2 Records, Reports, Tests and Inspections – Key Point

- Objective is to create, maintain, and disposition records in a way that ensures usability by future generations

10 CFR 63.21(c)(23)

SAR 5.3 Training and Certification of Personnel – Contents

- Describes the OCRWM functional organization anticipated at time of operations
- Identifies and details responsibilities of key staff positions including educational and experience requirements
- Describes the qualification and training for the operational phase of the repository
- Describes training organization and program plans, including
  - General Employee Training
  - Radiological and criticality safety controls
  - Repository operations and maintenance training
  - Emergency preparedness training

10 CFR 63.21(c)(22)

SAR 5.3 Training and Certification of Personnel – Key Points

- Training is designed, developed and implemented utilizing a systematic approach as described in ANS/ANSI-3.1-1993
- Individuals certified as operators of equipment or controls that are important to safety (ITS) or important to waste isolation (ITWI) will be medically evaluated by a licensed physician periodically to assure they meet fitness standards
- Observation of continued fitness will be controlled by personnel procedures and training

10 CFR 63.21(c)(22)

SAR 5.3 Training and Certification of Personnel (continued)

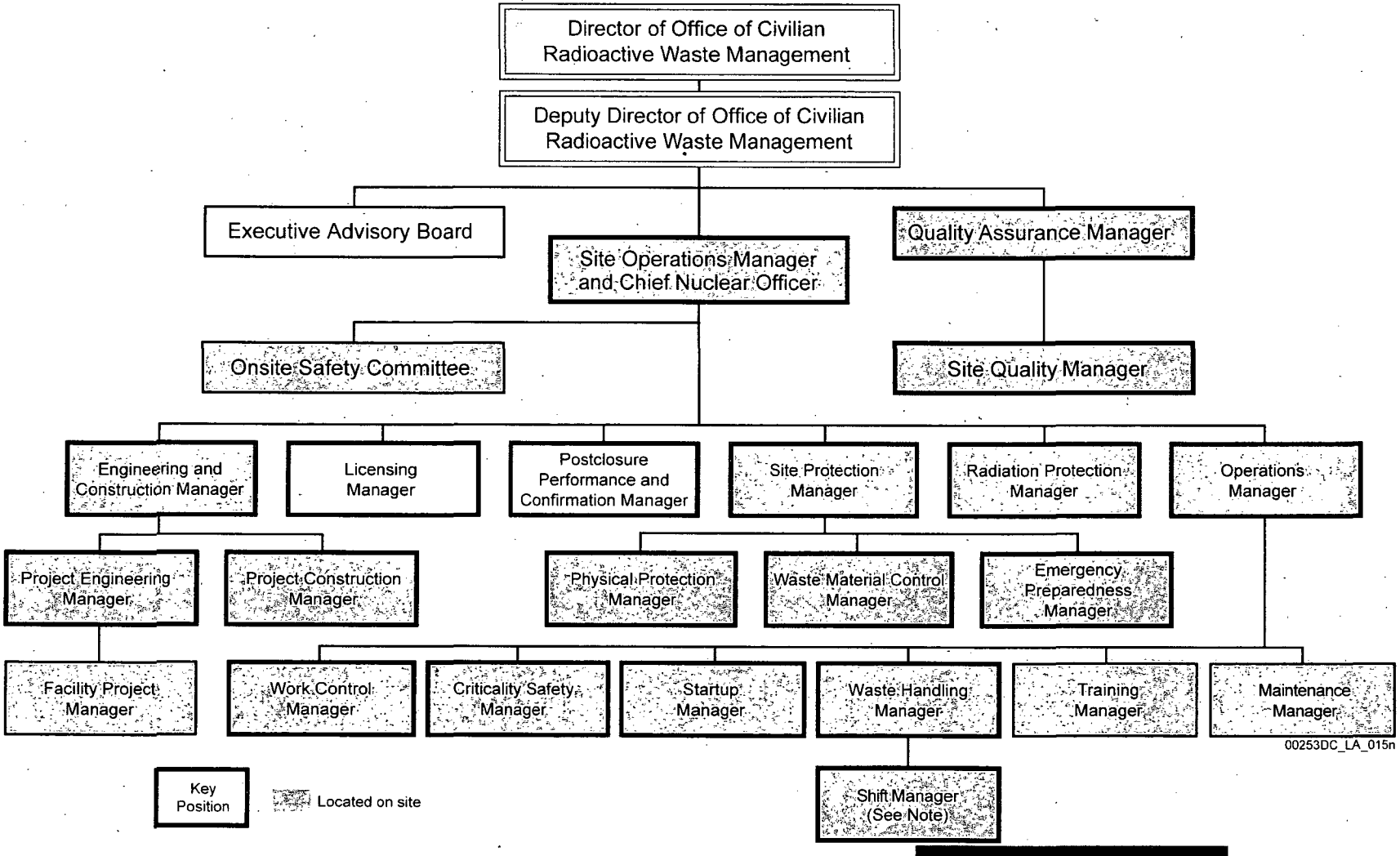

10 CFR 63.21(c)(22)

SAR 5.4 Expert Elicitation

- Contents
  - Formal, structured, and documented process for obtaining views of informed scientific community
  - Three expert elicitations support LA
- Key points
  - Section describes process – not results
  - Results described in other LA sections
    - Probabilistic Volcanic Hazard Analysis (SAR 2.2 and 2.3.11)
    - Probabilistic Seismic Hazard Analysis (SAR 1.1.5.2, 1.2.2.3, 2.2, and 2.3.4)
    - Saturated Zone Flow and Transport (SAR 2.3.9)

10 CFR 63.21(c)(19)

SAR 5.5 Plans for Initial Startup and Testing – Contents

- Startup testing will be conducted using written, reviewed and approved procedures
- Personnel preparing the test procedures will be qualified in accordance with the Testing Program Plan
- Approved test procedures will be made available for NRC inspection approximately 90 days prior to intended use

10 CFR 63.21(c)(22)(iv)

SAR 5.5 Plans for Initial Startup and Testing – Key Points

- Startup testing includes
  - Component testing
  - Systems functional testing
  - Cold integrated systems testing
  - Operational readiness review
  - Hot testing - Initial startup
- Startup procedures will be developed with goal of evolving into operating procedures

10 CFR 63.21(c)(22)(iv)

SAR 5.6 Plans and Procedures for Conduct of Normal Activities, Including Operations, Maintenance, Surveillance and Periodic Testing – Contents

- Reliability centered maintenance techniques are being fully integrated into the planning process
- Procedures will be developed based on inclusion of testing procedure results
- Procedures will be available on site for NRC inspection prior to receipt of waste

10 CFR 63.21(c)(22)(v)

SAR 5.6 Plans and Procedures for Conduct of Normal Activities, Including Operations, Maintenance, Surveillance and Periodic Testing – Key Points

- DOE will develop - in advance of receiving license to receive and possess waste
  - Conduct of Operations Plan
  - Conduct of Maintenance Plan
- Plans will define approach to operating the repository
- Plans will address surveillance and periodic testing
- Surveillance and monitoring will be used to detect degradation and adverse trends before component failure

10 CFR 63.21(c)(22)(v)

5.7 Emergency Planning

- Contents
  - Summary of emergency planning accomplished to date
  - Provides a description of the Emergency Plan, based upon criteria in 10 CFR 72.32(b), for responding to and recovering from radiological emergencies that may occur during repository operations
- Key points
  - Plan for operations will be provided no later than six months prior to submittal of updated license application to receive and possess waste

10 CFR 63.21(c)(21)

5.8 Controls to Restrict Access and Regulate Land Use

- Contents
  - Ownership of land
  - Controls for permanent closure
  - Additional controls through permanent closure
  - Water rights
  - Conceptual design of monuments and markers
  - Records storage
- Key points
  - DOE is undertaking activities to establish jurisdiction and control of land
  - Control will be established prior to receipt of construction authorization

10 CFR 63.21(c)(24)

5.9 Use of GROA for Purposes Other Than Disposal of Radioactive Waste

- Contents
  - Potential activities include
    - Native American cultural activities
    - Independent performance monitoring
- Key points
  - No activities currently under consideration
  - Any proposed activity would be analyzed to assure no potential impact to safe repository operation

10 CFR 63.21(c)(22)(vii)

5.10 License Specifications Contents

- Proposes probable subjects of license specifications and basis for selection
- Proposed structure of repository license specifications generally consistent with NRC and industry guidance documents
- Proposed grouping of probable subjects of license specifications
  - Limiting conditions for operation
    - Supports preclosure safety analysis requirements and activities which could impact postclosure
  - Design features
  - Administrative controls

10 CFR 63.21(c)(18)

5.10 License Specifications Key Points

- Proposed set of repository license specifications will be submitted to NRC for approval at time of updated license application to receive and possess waste

10 CFR 63.21(c)(18)

5.11 Operational Radiation Protection Program

- Contents
  - Operational Radiation Protection Program will
    - Identify radiation protection organization
    - Describe radiation protection equipment
    - Describe methods, procedures, plans for conducting radiation surveys
- Key points
  - Will be available for NRC review prior to submittal of updated license application to receive and possess waste

10 CFR 63.21(c)(6)