GE Hitachi Nuclear Energy

26A6642AN
Revision 5
May 2008

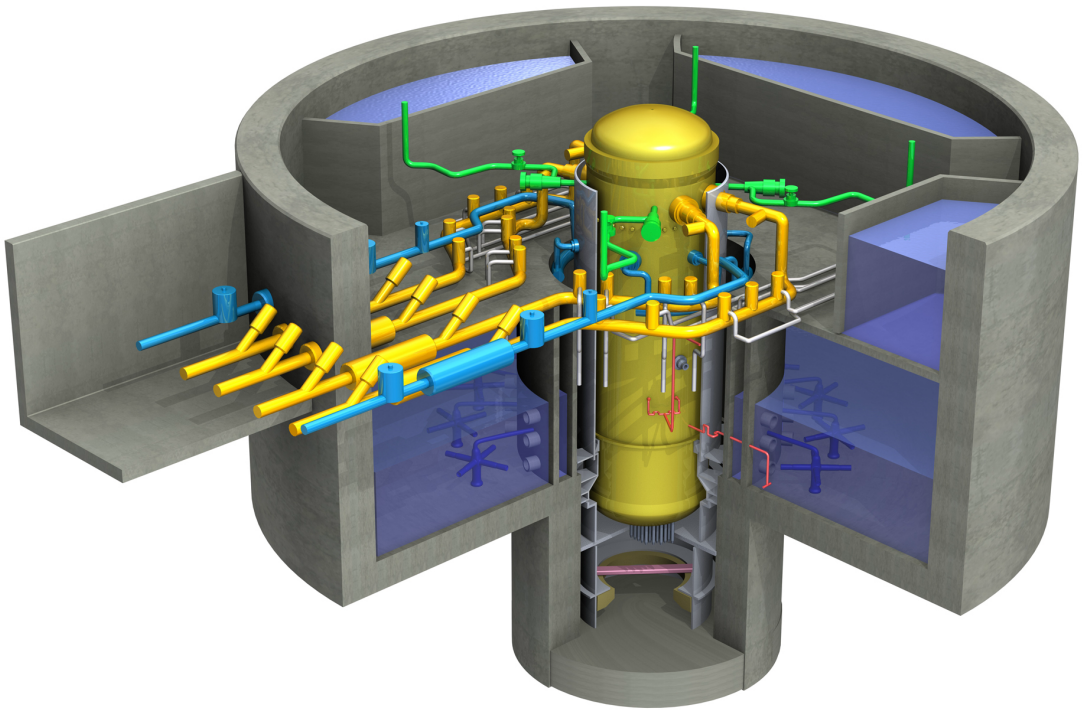

ESBWR Design Control Document
Tier 2

Chapter 3
Design of Structures, Components, Equipment, and Systems
Appendices 3G – 3L

Contents

3G. DESIGN DETAILS AND EVALUATION RESULTS OF SEISMIC CATEGORY I STRUCTURES 3G-1
3G.1 Reactor Building 3G-1
3G.1.1 Objective and Scope 3G-1
3G.1.2 Conclusions 3G-1
3G.1.3 Structural Description 3G-2
3G.1.3.1 Description of the Reactor Building 3G-2
3G.1.3.1.1 Reactor Building Structure 3G-2
3G.1.3.1.2 Containment and Containment Structure 3G-2
3G.1.3.1.3 Reactor Building Structure/Containment Structure Connections 3G-3
3G.1.3.1.4 Containment Internal Structures 3G-3
3G.1.4 Analytical Models 3G-3
3G.1.4.1 Structural Models 3G-3
3G.1.4.2 Foundation Models 3G-4
3G.1.5 Structural Analysis and Design 3G-5
3G.1.5.1 Site Design Parameters 3G-5
3G.1.5.2 Design Loads, Load Combinations, and Material Properties 3G-5
3G.1.5.2.1 Design Loads 3G-5
3G.1.5.2.1.1 Dead Load (D) and Live Load (L and L_o) 3G-5
3G.1.5.2.1.2 Snow and Rain Load 3G-5
3G.1.5.2.1.3 Lateral Soil Pressure at Rest 3G-5
3G.1.5.2.1.4 Wind Load (W) 3G-6
3G.1.5.2.1.5 Tornado Load (W_t) 3G-6
3G.1.5.2.1.6 Thermal Loads 3G-6
3G.1.5.2.1.7 Pressure Loads 3G-6
3G.1.5.2.1.8 Condensation Oscillation and Chugging Loads 3G-6
3G.1.5.2.1.9 Safety Relief Valve Loads 3G-7
3G.1.5.2.1.10 Steam Tunnel Subcompartment Pressure 3G-7
3G.1.5.2.1.11 Subcompartment Pressure in Other Compartments 3G-7
3G.1.5.2.1.12 Annulus Pressurization Loads 3G-7
3G.1.5.2.1.13 Design Seismic Loads 3G-7
3G.1.5.2.2 Load Combinations and Acceptance Criteria 3G-7
3G.1.5.2.2.1 Reinforced Concrete Containment Vessel 3G-8
3G.1.5.2.2.2 Steel Containment Components 3G-8
3G.1.5.2.2.3 Containment Internal Structures 3G-8
3G.1.5.2.2.4 Reactor Building Concrete Structures Including Pool Girders 3G-8
3G.1.5.2.3 Material Properties 3G-8
3G.1.5.2.3.1 Concrete 3G-8
3G.1.5.2.3.2 Reinforcing Steel 3G-9
3G.1.5.2.3.3 Structural Steel 3G-9
3G.1.5.3 Stability Requirements 3G-9
3G.1.5.4 Structural Design Evaluation 3G-9
3G.1.5.4.1 Containment Structure 3G-10
3G.1.5.4.1.1 Containment Wall Including RPV Pedestal 3G-10

3G.1.5.4.1.2 Containment Top Slab and Suppression Pool Slab 3G-11
3G.1.5.4.1.3 Containment Foundation Mat 3G-11
3G.1.5.4.1.4 Drywell Head 3G-11
3G.1.5.4.1.5 PCCS Condenser 3G-13
3G.1.5.4.2 Containment Internal Structures 3G-13
3G.1.5.4.2.1 Diaphragm Floor 3G-14
3G.1.5.4.2.2 Vent Wall Structure 3G-14
3G.1.5.4.2.3 Reactor Shield Wall 3G-15
3G.1.5.4.2.4 RPV Support Bracket 3G-15
3G.1.5.4.2.5 Gravity-Driven Cooling System Pool 3G-15
3G.1.5.4.3 Reactor Building 3G-15
3G.1.5.4.3.1 RB Shear Walls 3G-16
3G.1.5.4.3.2 RB Foundation Mat Outside Containment 3G-16
3G.1.5.4.3.3 RB Floor Slabs 3G-16
3G.1.5.4.3.4 Pool Girders 3G-16
3G.1.5.4.3.5 Main Steam Tunnel Floors and Walls 3G-16
3G.1.5.5 Foundation Stability 3G-17
3G.1.5.5.1 Effect of Basemat Uplift 3G-17
3G.1.5.5.2 Effect of Horizontal Variation of Soil Spring 3G-18
3G.1.5.5.3 Effect of Construction Sequence 3G-18
3G.1.5.5.4 Foundation Settlement 3G-18
3G.1.5.6 Tornado Missile Evaluation 3G-18
3G.1.6 References 3G-19
3G.2 Control Building 3G-190
3G.2.1 Objective and Scope 3G-190
3G.2.2 Conclusions 3G-190
3G.2.3 Structural Description 3G-190
3G.2.4 Analytical Models 3G-190
3G.2.4.1 Structural Model 3G-190
3G.2.4.2 Foundation Models 3G-191
3G.2.5 Structural Analysis and Design 3G-191
3G.2.5.1 Site Design Parameters 3G-191
3G.2.5.2 Design Loads, Load Combinations, and Material Properties 3G-191
3G.2.5.2.1 Design Loads 3G-191
3G.2.5.2.1.1 Dead Load (D) and Live Load (L and Lo) 3G-191
3G.2.5.2.1.2 Snow and Rain Load 3G-191
3G.2.5.2.1.3 Lateral Soil Pressure at Rest 3G-192
3G.2.5.2.1.4 Wind Load (W) 3G-192
3G.2.5.2.1.5 Tornado Load (W_t) 3G-192
3G.2.5.2.1.6 Thermal Load (T_o and T_a) 3G-192
3G.2.5.2.1.7 Design Seismic Loads 3G-192
3G.2.5.2.2 Load Combinations and Acceptance Criteria 3G-192
3G.2.5.2.3 Material Properties 3G-193
3G.2.5.3 Stability Requirements 3G-193
3G.2.5.4 Structural Design Evaluation 3G-193
3G.2.5.4.1 Shear Walls 3G-193

3G.2.5.4.2 Floor Slabs 3G-193
3G.2.5.4.3 Foundation Mat 3G-193
3G.2.5.5 Foundation Stability 3G-194
3G.2.5.5.1 Foundation Settlement 3G-194
3G.2.5.6 Tornado Missile Evaluation 3G-194
3G.3 Fuel Building 3G-242
3G.3.1 Objective and Scope 3G-242
3G.3.2 Conclusions 3G-242
3G.3.3 Structural Description 3G-242
3G.3.4 Analytical Models 3G-242
3G.3.5 Structural Analysis and Design 3G-243
3G.3.5.1 Site Design Parameters 3G-243
3G.3.5.2 Design Loads, Load Combinations, and Material Properties 3G-243
3G.3.5.2.1 Design Loads 3G-243
3G.3.5.2.1.1 Dead Load (D) and Live Load (L and Lo) 3G-243
3G.3.5.2.1.2 Snow and Rain Load 3G-243
3G.3.5.2.1.3 Lateral Soil Pressure at Rest 3G-243
3G.3.5.2.1.4 Wind Load (W) 3G-243
3G.3.5.2.1.5 Tornado Load (W_t) 3G-243
3G.3.5.2.1.6 Thermal Load 3G-243
3G.3.5.2.1.7 Design Seismic Loads 3G-244
3G.3.5.2.2 Load Combinations and Acceptance Criteria 3G-244
3G.3.5.2.3 Material Properties 3G-244
3G.3.5.3 Stability Requirements 3G-244
3G.3.5.4 Structural Design Evaluation 3G-244
3G.3.5.4.1 Shear Walls and Spent Fuel Pool Walls 3G-245
3G.3.5.4.2 Floor Slabs 3G-245
3G.3.5.4.3 Foundation Mat 3G-245
3G.3.5.5 Foundation Stability 3G-245
3G.3.5.6 Tornado Missile Evaluation 3G-245
3G.4 FireWater Service Complex 3G-270
3G.4.1 Objective and Scope 3G-270
3G.4.2 Conclusion 3G-270
3G.4.3 Structural Description 3G-270
3G.4.4 Analytical Models 3G-270
3G.4.4.1 Structural Model 3G-270
3G.4.4.2 Foundation Models 3G-271
3G.4.5 Structural Analysis and Design 3G-271
3G.4.5.1 Site Design Parameters 3G-271
3G.4.5.2 Design Loads, Load Combinations, and Material Properties 3G-271
3G.4.5.2.1 Design Loads 3G-271
3G.4.5.2.1.1 Dead Load (D) and Live Load (L and L_o) 3G-271
3G.4.5.2.1.2 Snow and Rain Load 3G-271
3G.4.5.2.1.3 Lateral Soil Pressure 3G-271
3G.4.5.2.1.4 Wind Load (W) 3G-271
3G.4.5.2.1.5 Tornado Load (W_t) 3G-272

3G.4.5.2.1.6 Thermal Load (T_o) 3G-272
3G.4.5.2.1.7 Design Seismic Loads 3G-272
3G.4.5.2.2 Load Combinations and Acceptance Criteria 3G-272
3G.4.5.2.3 Material Properties 3G-272
3G.4.5.3 Stability Requirements 3G-272
3G.4.5.4 Structural Design Evaluation 3G-272
3G.4.5.4.1 Shear Walls 3G-273
3G.4.5.4.2 Roof Floor Slabs 3G-273
3G.4.5.4.3 Foundation Mat 3G-273
3G.4.5.4.4 Shear Key 3G-273
3G.4.5.5 Foundation Stability 3G-274
3G.4.5.5.1 Foundation Settlement 3G-274
3G.4.5.6 Tornado Missile Evaluation 3G-274
3H. EQUIPMENT QUALIFICATION DESIGN ENVIRONMENTAL CONDITIONS 3H-1
3H.1 Introduction 3H-1
3H.2 Plant Zones 3H-1
3H.2.1 Containment Vessel 3H-1
3H.2.2 Outside Containment Vessel 3H-1
3H.3 Environmental Conditions 3H-2
3H.3.1 Plant Normal Operating Conditions 3H-2
3H.3.2 Accident Conditions 3H-2
3H.3.2.1 Transient Room Temperature Analysis 3H-2
3H.3.3 Water Quality 3H-4
3H.3.4 Locations of Safety-Related Equipment 3H-4
3H.3.5 Mild Environment Conditions 3H-5
3H.3.6 COL Information 3H-5
3H.4 References 3H-5
3I. DESIGNATED NEDE-24326-1-P MATERIAL WHICH MAY NOT CHANGE WITHOUT PRIOR NRC APPROVAL 3I-1
3I.1 General Requirements for Dynamic Testing 3I-1
3I.2 Product and Assembly Testing 3I-2
3I.3 Multiple-Frequency Tests 3I-2
3I.4 Single- and Multi-axis Tests 3I-3
3I.5 Single Frequency Tests 3I-3
3I.6 Damping 3I-3
3I.7 Qualification Determination 3I-3
3I.8 Dynamic Qualification by Analysis 3I-4
3I.9 Required Response Spectra 3I-4
3I.10 Time History Analysis 3I-4
3I.11 References 3I-5
3J. EVALUATION OF POSTULATED RUPTURES IN HIGH ENERGY PIPES 3J-1
3J.1 Background and Scope 3J-1

3J.2 Identification of Rupture Locations and Rupture Geometry 3J-1
3J.2.1 Ruptures in Containment Penetration Area. 3J-1
3J.2.2 Ruptures in Areas other than Containment Penetration. 3J-2
3J.2.3 Determination of the Type of Pipe Break 3J-2
3J.3 Design and Selection of Pipe Whip Restraints 3J-2
3J.3.1 Preliminary Selection of Pipe Whip Restraint 3J-2
3J.3.2 Preparation of Simplified Computer Model of Piping-Pipe Whip Restraint System.. 3J-2
3J.3.3 Piping Dynamic Analysis 3J-2
3J.3.4 Selection of Pipe Whip Restraint for Pipe Whip Restraint Analysis 3J-3
3J.4 Pipe Rupture Evaluation 3J-3
3J.4.1 General Approach 3J-3
3J.4.2 Procedure For Dynamic Time-History Analysis With Simplified Model 3J-4
3J.4.2.1 Modeling of Piping System 3J-4
3J.4.2.2 Dynamic Analysis of Simplified Piping Model 3J-4
3J.4.3 Procedure For Dynamic Time-History Analysis Using Detailed Piping Model 3J-5
3J.4.3.1 Modeling of Piping System 3J-5
3J.4.3.2 Dynamic Analysis using Detail Piping Model 3J-5
3J.5 Jet Impingement on Safety-related Piping 3J-5
3K. RESOLUTION OF INTERSYSTEM LOSS-OF-COOLANT-ACCIDENT 3K-1
3K.1 Introduction 3K-1
3K.2 Regulatory Positions 3K-1
3K.3 Boundary Limits of Ultimate Rupture Strength 3K-2
3K.4 Evaluation Procedure 3K-2
3K.5 Systems Evaluated 3K-2
3K.6 Piping Design Pressure for Ultimate Rupture Strength Compliance 3K-3
3K.7 Applicability of Ultimate Rupture Strength Non-piping Components 3K-3
3K.8 Results 3K-3
3K.9 Valve Misalignment Due To Operator Error 3K-3
3K.10 Summary 3K-4
3K.11 References 3K-4
ULTIMATE RUPTURE STRENGTH SYSTEM BOUNDARY EVALUATION 3K-5
3KA.1 Control Rod Drive System 3K-5
3KA.1.1 System URS Boundary Description 3K-5
3KA.1.2 Downstream Interfaces 3K-5
3KA.1.3 Low-Pressure Piping Systems and Components Designed to URS Pressure 3K-6
3KA.2 Standby Liquid Control System 3K-7
3KA.2.1 System URS Boundary Description 3K-7
3KA.2.2 Downstream interfaces 3K-7
3KA.2.3 Low Pressure Piping Systems and Components Designed to URS Pressure..... 3K-7
3KA.3 Reactor Water Cleanup/Shutdown Cooling System 3K-8
3KA.3.1 System URS Boundary Description 3K-8
3KA.3.2 Downstream Interfaces 3K-8
3KA.3.3 Low-Pressure Piping Systems and Components Designed to URS Pressure 3K-8

3KA.4 Fuel And Auxiliary Pools Cooling System 3K-9
3KA.4.1 System URS Boundary Description 3K-9
3KA.4.2 Downstream Interfaces 3K-9
3KA.4.3 Low-Pressure Piping Systems and Components Designed to URS Pressure .. 3K-10
3KA.5 Nuclear Boiler System 3K-11
3KA.5.1 System URS Boundary Description 3K-11
3KA.5.2 Downstream Interfaces 3K-11
3KA.5.3 Low-Pressure Piping Systems and Components Designed to URS Pressure .. 3K-11
3KA.6 Condensate And Feedwater System 3K-12
3KA.6.1 System URS Boundary Description 3K-12
3KA.6.2 Downstream Interfaces 3K-12
3KA.6.3 Low-Pressure Piping Systems and Components Designed to URS Pressure .. 3K-12
3L. REACTOR INTERNALS FLOW INDUCED VIBRATION PROGRAM 3L-1
3L.1 Introduction 3L-1
3L.2 Reactor Internal Components FIV Evaluation 3L-2
3L.2.1 Evaluation Process – Part 1 ..... 3L-2
3L.2.2 Evaluation Process – Part 2 ..... 3L-4
3L.2.3 Design and Materials Evaluation 3L-5
3L.3 Chimney Assembly and SLC Internal Piping Evaluation 3L-6
3L.3.1 Design and Materials 3L-6
3L.3.2 Prior Operating Experience 3L-6
3L.3.3 Testing and Two-phase Flow Analysis 3L-6
3L.3.4 SLC Internal Piping Evaluation 3L-7
3L.4 Steam Dryer Evaluation Program 3L-8
3L.4.1 Steam Dryer Design and Performance 3L-8
3L.4.2 Materials and Fabrication 3L-8
3L.4.3 Load Combinations 3L-9
3L.4.4 Fluid Loads on the Steam Dryer 3L-9
3L.4.5 Structural Evaluation 3L-9
3L.4.6 Instrumentation and Startup Testing 3L-10
3L.5 Startup Test Program 3L-13
3L.5.1 Component Selections 3L-13
3L.5.2 Sensor Locations 3L-13
3L.5.3 Test Conditions 3L-13
3L.5.4 Data Reduction Methods 3L-14
3L.5.4.1 Time History Analysis 3L-14
3L.5.4.2 Frequency Analysis 3L-15
3L.5.5 Data Evaluation Methods 3L-16
3L.5.5.1 Finite Element Models 3L-16
3L.5.5.1.1 Chimney Head and Steam Separators 3L-16
3L.5.5.1.2 Shroud and Chimney 3L-16
3L.5.5.1.3 Steam Dryer 3L-17
3L.5.5.1.4 Standby Liquid Control Lines 3L-18
3L.5.5.2 Stress Evaluation 3L-18
3L.5.5.2.1 Methods I and II 3L-21

3L.5.5.2.2 Method III.....3L-23
3L.5.5.3 Stress Evaluation Steam Dryer.....3L-24
3L.6 References 3L-27

List of Tables

Table 3G.1-1 Soil Spring Constants for the RB Analysis Model 3G-20
Table 3G.1-2 Site Design Parameters 3G-21
Table 3G.1-3 Equipment and Hydrostatic Loads inside RCCV 3G-22
Table 3G.1-4 Equipment and Hydrostatic Loads in RB Pools 3G-23
Table 3G.1-5 Miscellaneous Structures, Piping, and Commodity Loads on RB Floor 3G-24
Table 3G.1-6 Equivalent Linear Temperature Distributions at Various Sections 3G-25
Table 3G.1-7 Pressure Loads Inside RCCV 3G-26
Table 3G.1-8 Pressure Loads Inside IC/PCCS Pools 3G-26
Table 3G.1-9 Maximum Vertical Acceleration 3G-27
Table 3G.1-10 Selected Load Combinations for the RCCV 3G-28
Table 3G.1-11 Selected Load Combinations for the RB 3G-28
Table 3G.1-12 Material Constants for Design Calculations 3G-29
Table 3G.1-13 Results of NASTRAN Analysis, Dead Load 3G-30
Table 3G.1-14 Results of NASTRAN Analysis, Drywell Unit Pressure (1 MPa) 3G-32
Table 3G.1-15 Results of NASTRAN Analysis, Wetwell Unit Pressure (1 MPa) 3G-34
Table 3G.1-16 Results of NASTRAN Analysis, Thermal Load (Normal Operation: Winter) 3G-36
Table 3G.1-17 Results of NASTRAN Analysis, Thermal Load (LOCA After 6 minutes: Winter) 3G-38
Table 3G.1-18 Results of NASTRAN Analysis, Thermal Load (LOCA After 72 hours: Winter) 3G-40
Table 3G.1-19 Results of NASTRAN Analysis, Seismic Load (Horizontal: North to South Direction) 3G-42
Table 3G.1-20 Results of NASTRAN Analysis, Seismic Load (Horizontal: East to West Direction) 3G-44
Table 3G.1-21 Results of NASTRAN Analysis, Seismic Load (Vertical: Upward Direction) 3G-46
Table 3G.1-22 Combined Forces and Moments: RCCV, Selected Load Combination CV-1 ..... 3G-48
Table 3G.1-23 Combined Forces and Moments: RCCV, Selected Load Combination CV-7a 3G-50
Table 3G.1-24 Combined Forces and Moments: RCCV, Selected Load Combination CV-7b 3G-53
Table 3G.1-25 Combined Forces and Moments: RCCV, Selected Load Combination CV-11a 3G-56
Table 3G.1-26 Combined Forces and Moments: RCCV, Selected Load Combination CV-11b 3G-61
Table 3G.1-27 Sectional Thicknesses and Rebar Ratios of RCCV Used in the Evaluation . 3G-66
Table 3G.1-28 Rebar and Concrete Stresses of RCCV: Selected Load Combination CV-1 . 3G-69
Table 3G.1-29 Rebar and Concrete Stresses of RCCV: Selected Load Combination CV-7a 3G-70
Table 3G.1-30 Rebar and Concrete Stresses of RCCV: Selected Load Combination CV-7b 3G-71

Table 3G.1-31 Rebar and Concrete Stresses of RCCV: Selected Load Combination CV-11a 3G-72
Table 3G.1-32 Rebar and Concrete Stresses of RCCV: Selected Load Combination CV-11b 3G-73
Table 3G.1-33 Transverse Shear of RCCV 3G-74
Table 3G.1-33 Transverse Shear of RCCV 3G-74
Table 3G.1-34 Tangential Shear of RCCV 3G-75
Table 3G.1-35 Containment Liner Plate Strains (Max) 3G-77
Table 3G.1-36 Drywell Head Elements Stress Summary 3G-79
Table 3G.1-37 Diaphragm Floor (D/F) Slab Elements Stress Summary 3G-80
Table 3G.1-38 Diaphragm Floor (D/F) Slab Anchorage Structural Capacity 3G-81
Table 3G.1-39 Vent Wall Structural Elements Stress Summary 3G-82
Table 3G.1-40 Reactor Shield Wall (RSW) Structural Element Stress Summary 3G-83
Table 3G.1-41 RPV Support Bracket Structural Elements Stress Summary 3G-84
Table 3G.1-42 Vent Wall and RPV Support Bracket Anchorage Structural Capacity 3G-84
Table 3G.1-43 GDCS Pool Structural Elements Stress Summary 3G-85
Table 3G.1-44 GDCS Pool Anchorage Structural Capacity 3G-86
Table 3G.1-45 Combined Forces and Moments: RB, Selected Load Combination RB-4 .... 3G-87
Table 3G.1-46 Combined Forces and Moments: RB, Selected Load Combination RB-8a .. 3G-89
Table 3G.1-47 Combined Forces and Moments: RB, Selected Load Combination RB-8b .. 3G-92
Table 3G.1-48 Combined Forces and Moments: RB, Selected Load Combination RB-9a .. 3G-95
Table 3G.1-49 Combined Forces and Moments: RB, Selected Load Combination RB-9b 3G-100
Table 3G.1-50 Sectional Thicknesses and Rebar Ratios of RB Used in the Evaluation 3G-105
Table 3G.1-51 Rebar and Concrete Stresses of RB: Selected Load Combination RB-4 .... 3G-108
Table 3G.1-52 Rebar and Concrete Stresses of RB: Selected Load Combination RB-8a... 3G-109
Table 3G.1-53 Rebar and Concrete Stresses of RB: Selected Load Combination RB-8b .. 3G-110
Table 3G.1-54 Rebar and Concrete Stresses of RB: Selected Load Combination RB-9a... 3G-111
Table 3G.1-55 Rebar and Concrete Stresses of RB: Selected Load Combination RB-9b .. 3G-112
Table 3G.1-56 Transverse Shear of RB 3G-113
Table 3G.1-57 Factors of Safety for Foundation Stability 3G-114
Table 3G.1-58 Maximum Soil Bearing Stress Involving SSE 3G-114
Table 3G.1-59 Stress Calculation Results for Basemat Uplift Analysis 3G-115
Table 3G.1-60 PCCS Condenser and Supports Stress Summary 3G-116
Table 3G.2-1 Soil Spring Constants for the CB Analysis Model 3G-195
Table 3G.2-2 Equipment Load of CB 3G-195
Table 3G.2-3 Miscellaneous Structures, Piping, and Commodity Load of CB 3G-195
Table 3G.2-4 Equivalent Liner Temperature Distributions at Various Sections 3G-196
Table 3G.2-5 Maximum Vertical Acceleration 3G-197
Table 3G.2-6 Selected Load Combinations for the CB 3G-198
Table 3G.2-7 Results of NASTRAN Analysis: Dead Load 3G-199
Table 3G.2-8 Results of NASTRAN Analysis: Thermal Load (LOCA: Winter) 3G-200
Table 3G.2-9 Results of NASTRAN Analysis: Seismic Load (Horizontal: North to South Direction) 3G-201
Table 3G.2-10 Results of NASTRAN Analysis: Seismic Load (Horizontal: East to West Direction) 3G-202

Table 3G.2-11 Results of NASTRAN Analysis: Seismic Load (Vertical: Upward Direction) 3G-203
Table 3G.2-12 Combined Forces and Moments: Selected Load Combination CB-3 ..... 3G-204
Table 3G.2-13 Combined Forces and Moments: Selected Load Combination CB-4 ..... 3G-206
Table 3G.2-14 Combined Forces and Moments: Selected Load Combination CB-7 ..... 3G-208
Table 3G.2-15 Combined Forces and Moments: Selected Load Combination CB-9 ..... 3G-210
Table 3G.2-16 Sectional Thicknesses and Rebar Ratios Used in the Evaluation 3G-213
Table 3G.2-17 Rebar and Concrete Stresses (Basemat and Slabs): Selected Load Combination CB-3 ..... 3G-215
Table 3G.2-19 Rebar and Concrete Stresses (Basemat and Slabs): Selected Load Combination CB-4 ..... 3G-217
Table 3G.2-20 Rebar and Concrete Stresses (Walls): Selected Load Combination CB-4 .. 3G-218
Table 3G.2-21 Rebar and Concrete Stresses (Basemat and Slabs): Selected Load Combination CB-7 ..... 3G-219
Table 3G.2-22 Rebar and Concrete Stresses (Walls): Selected Load Combination CB-7 .. 3G-220
Table 3G.2-23 Rebar and Concrete Stresses (Basemat and Slabs): Selected Load Combination CB-9 ..... 3G-221
Table 3G.2-24 Rebar and Concrete Stresses (Walls): Selected Load Combination CB-9 .. 3G-222
Table 3G.2-25 Calculation Results for Transverse Shear 3G-223
Table 3G.2-26 Factors of Safety for Foundation Stability 3G-224
Table 3G.2-27 Maximum Soil Bearing Stress Involving SSE 3G-224
Table 3G.3-1 Miscellaneous Structures and Commodity in Spent Fuel Pool 3G-246
Table 3G.3-2 Miscellaneous Structures, Piping, and Commodity Load on FB Floor 3G-247
Table 3G.3-3 Equivalent Liner Temperature Distributions at Various Sections 3G-247
Table 3G.3-4 Selected Load Combinations for the FB 3G-248
Table 3G.3-5 Results of NASTRAN Analysis: Dead Load 3G-249
Table 3G.3-6 Results of NASTRAN Analysis: Thermal Load (Winter) 3G-250
Table 3G.3-7 Results of NASTRAN Analysis: Seismic Load (Horizontal: North to South Direction) 3G-251
Table 3G.3-8 Results of NASTRAN Analysis: Seismic Load (Horizontal: East to West Direction) 3G-252
Table 3G.3-9 Results of NASTRAN Analysis: Seismic Load (Vertical: Upward Direction) 3G-253
Table 3G.3-10 Combined Forces and Moments: Selected Load Combination FB-4 ..... 3G-254
Table 3G.3-11 Combined Forces and Moments: Selected Load Combination FB-8 ..... 3G-255
Table 3G.3-12 Combined Forces and Moments: Selected Load Combination FB-9 ..... 3G-257
Table 3G.3-13 Sectional Thicknesses and Rebar Ratios Used in the Evaluation 3G-259
Table 3G.3-14 Rebar and Concrete Stresses: Selected Load Combination FB-4 ..... 3G-261
Table 3G.3-15 Rebar and Concrete Stresses: Selected Load Combination FB-8 ..... 3G-262
Table 3G.3-16 Rebar and Concrete Stresses: Selected Load Combination FB-9 ..... 3G-263
Table 3G.3-17 Transverse Shear of FB 3G-264
Table 3G.4-1 Soil Spring Constants for FWSC Analysis Model 3G-275
Table 3G.4-2 Equipment Load of FWSC 3G-275
Table 3G.4-3 Miscellaneous Structures, Piping, and Commodity Load of FWSC 3G-275
Table 3G.4-4 Equivalent Linear Temperature Distributions at Various Sections 3G-276
Table 3G.4-5 Maximum Vertical Acceleration 3G-277

Table 3G.4-6 Selected Load Combinations for FWSC 3G-277
Table 3G.4-7 Results of NASTRAN Analysis: Dead Load 3G-278
Table 3G.4-8 Results of NASTRAN Analysis: Thermal Load (Winter)..... 3G-279
Table 3G.4-9 Results of NASTRAN Analysis: Seismic Load (Horizontal: North to South Direction) 3G-280
Table 3G.4-10 Results of NASTRAN Analysis: Seismic Load (Horizontal: East to West Direction) 3G-281
Table 3G.4-11 Results of NASTRAN Analysis: Seismic Load (Vertical: Upward Direction) 3G-282
Table 3G.4-12 Combined Forces and Moments: Selected Load Combination FWSC-3 .... 3G-283
Table 3G.4-13 Combined Forces and Moments: Selected Load Combination FWSC-4 .... 3G-284
Table 3G.4-14 Combined Forces and Moments: Selected Load Combination FWSC-6 .... 3G-285
Table 3G.4-15 Combined Forces and Moments: Selected Load Combination FWSC -7 ... 3G-287
Table 3G.4-16 Sectional Thicknesses and Rebar Ratios Used in the Evaluation..... 3G-289
Table 3G.4-17 Rebar and Concrete Stresses: Selected Load Combination FWSC-3..... 3G-291
Table 3G.4-18 Rebar and Concrete Stresses: Selected Load Combination FWSC-4..... 3G-292
Table 3G.4-19 Rebar and Concrete Stresses: Selected Load Combination FWSC-6..... 3G-293
Table 3G.4-20 Rebar and Concrete Stresses: Selected Load Combination FWSC-7..... 3G-294
Table 3G.4-21 Calculation Results for Transverse Shear..... 3G-295
Table 3G.4-22 Factors of Safety for Foundation Stability 3G-296
Table 3G.4-23 Maximum Soil Bearing Stress Involving SSE 3G-296
Table 3H-1 Cross Reference of Plant Environmental Data and Location 3H-6
Table 3H-2 Thermodynamic Environment Conditions Inside Containment Vessel for Normal Operating Conditions..... 3H-7
Table 3H-3 Thermodynamic Environment Conditions Inside Reactor Building for Normal Operating Conditions..... 3H-8
Table 3H-4 Thermodynamic Environment Conditions Inside Control Building for Normal Operating Conditions..... 3H-10
Table 3H-5 Radiation Environment Conditions Inside Containment Vessel for Normal Operating Conditions 3H-11
Table 3H-6 Typical Radiation Environmental Qualification Conditions Inside Reactor Building..... 3H-12
Table 3H-7 Typical Radiation Environmental Qualification Conditions Inside Control Building..... 3H-14
Table 3H-8 Thermodynamic Environment Conditions Inside Containment Vessel for Accident Conditions..... 3H-15
Table 3H-9 Thermodynamic Environment Conditions Inside Reactor Building for Accident Conditions..... 3H-16
Table 3H-10 Thermodynamic Environment Conditions Inside Control Building for Accident Conditions..... 3H-18
Table 3H-11 Radiation Environment Conditions Inside Containment Vessel for Accident Conditions 3H-19
Table 3H-12 Room Heat Loads 3H-20
Table 3H-13 Typical Mild Environment Parameter Limits..... 3H-22
Table 3H-14 Input Parameters, Initial Conditions and Assumptions used in Reactor Building and Control Building Heat up Analyses 3H-23

Table 3H-15 Analytical Room Environmental Temperatures 3H-24
Table 3L-1 Comparison of Typical Major Steam Dryer Configuration Parameters 3L-28
Table 3L-2 Specific Steam Dryer Load Definition Legend.....3L-29
Table 3L-3 Typical Vibration Sensors.....3L-29
Table 3L-4 Sensor Locations and Types 3L-30
Table 3L-5 Applicable Data Reduction Method for Comparison to Criteria 3L-31
Table 3L-6 Parameters Used in Spectrum Generation 3L-32
Table 3L-7 Data Evaluation Methods to be Used for Each Component 3L-32

List of Illustrations

Figure 3G.1-1. RB and FB Concrete Outline Plan at EL -11500 ..... 3G-117
Figure 3G.1-2. RB and FB Concrete Outline Plan at EL 4650..... 3G-118
Figure 3G.1-3. RB and FB Concrete Outline Plan at EL 17500..... 3G-119
Figure 3G.1-4. RB and FB Concrete Outline Plan at EL 27000..... 3G-120
Figure 3G.1-5. RB Concrete Outline Plan at EL 34000 ..... 3G-121
Figure 3G.1-6. RB and FB Concrete Outline N-S Section 3G-122
Figure 3G.1-7. RB and FB Concrete Outline E-W Section 3G-123
Figure 3G.1-8. Finite Element Model of RB/FB (Isometric View)..... 3G-124
Figure 3G.1-9. Finite Element Model of RB/FB (Foundation Mat)..... 3G-125
Figure 3G.1-10. Finite Element Model of RB/FB (RCCV Wall)..... 3G-126
Figure 3G.1-11. Finite Element Model of RB/FB (RPV Pedestal) 3G-127
Figure 3G.1-12. Finite Element Model of RB/FB (Top Slab)..... 3G-128
Figure 3G.1-13. Finite Element Model of RB/FB (Suppression Pool Slab) 3G-129
Figure 3G.1-14. Finite Element Model of RB/FB (External Wall: North Side)..... 3G-130
Figure 3G.1-15. Finite Element Model of RB/FB (External Wall: East Side))..... 3G-131
Figure 3G.1-16. Finite Element Model of RB/FB (Internal Wall on R7/F1 Column Line) 3G-132
Figure 3G.1-17. Finite Element Model of RB/FB (RCCV Internals)..... 3G-133
Figure 3G.1-18. Finite Element Model of RB/FB (RCCV Liner)..... 3G-134
Figure 3G.1-19. Soil Pressure at Rest..... 3G-135
Figure 3G.1-20. Sections Where Thermal Loads Are Defined 3G-136
Figure 3G.1-21. Condensation Oscillation (CO) Pressure Loads..... 3G-137
Figure 3G.1-22. Chugging (CHUG) Pressure Loads..... 3G-138
Figure 3G.1-23. SRV Pressure Loads..... 3G-139
Figure 3G.1-24. Design Seismic Shears and Moments for RB and FB Walls 3G-140
Figure 3G.1-25. Design Seismic Shears and Moments for RCCV..... 3G-141
Figure 3G.1-26. Design Seismic Shears and Moments for RPV Pedestal and Vent Wall .. 3G-142
Figure 3G.1-27. Seismic Lateral Soil Pressure..... 3G-143
Figure 3G.1-28. Section Considered for Analysis..... 3G-144
Figure 3G.1-29. Force and Moment in Shell Element..... 3G-145
Figure 3G.1-30. Section Deformation for Dead Load 3G-146
Figure 3G.1-31. Section Deformation for Drywell Unit Pressure (1 MPa)..... 3G-147
Figure 3G.1-32. Section Deformation for Wetwell Unit Pressure (1 MPa) 3G-148
Figure 3G.1-33. Section Deformation for Thermal Load (Normal Operation: Winter)..... 3G-149
Figure 3G.1-34. Section Deformation for Thermal Load (LOCA After 6 min.: Winter).... 3G-150
Figure 3G.1-35. Section Deformation for Thermal Load (LOCA After 72 hr.: Winter) 3G-151
Figure 3G.1-36. Section Deformation for Seismic Load (Horizontal: North to South) 3G-152
Figure 3G.1-37. Section Deformation for Seismic Load (Horizontal: East to West)..... 3G-153
Figure 3G.1-38. Section Deformation for Seismic Load (Vertical: Upward) 3G-154
Figure 3G.1-39. Flow Chart for Structural Analysis and Design 3G-155
Figure 3G.1-40. Reinforcing Steel of Foundation Mat: Plan..... 3G-156
Figure 3G.1-41. Reinforcing Steel of Foundation Mat: Section A-A..... 3G-157
Figure 3G.1-42. Reinforcing Steel of RCCV Wall..... 3G-158
Figure 3G.1-43. Reinforcing Steel of Suppression Pool Slab 3G-159
Figure 3G.1-44. Reinforcing Steel of Top Slab..... 3G-160

Figure 3G.1-45. Reinforcing Steel of RPV Pedestal 3G-161
Figure 3G.1-46. Reinforcing Steel of IC/PCCS Pool Girder 3G-162
Figure 3G.1-47. List of RB Wall and Slab Reinforcement 3G-163
Figure 3G.1-48. Liner Anchor 3G-164
Figure 3G.1-49. Liner Plate Plans 3G-165
Figure 3G.1-50. Liner Plate Development Elevation 3G-166
Figure 3G.1-51. Drywell Head 3G-167
Figure 3G.1-52. Equipment Hatch 3G-168
Figure 3G.1-53. Wetwell Hatch 3G-169
Figure 3G.1-54. Personnel Airlock 3G-170
Figure 3G.1-55. Diaphragm Floor 3G-171
Figure 3G.1-56. Diaphragm Floor Slab Anchor 3G-172
Figure 3G.1-57. RPV Support Bracket & Vent Wall 3G-173
Figure 3G.1-58. Reactor Shield Wall 3G-174
Figure 3G.1-59. GDCS Pool 3G-175
Figure 3G.1-60. Comparison of Basemat Deformation without Tension Springs (NS Direction SSE) 3G-176
Figure 3G.1-61. Comparison of Basemat Deformation without Tension Springs (EW Direction SSE) 3G-177
Figure 3G.1-62. Comparison of Basemat Sectional Moments (S to N SSE) 3G-178
Figure 3G.1-63. Comparison of Basemat Sectional Moments (W to E SSE) 3G-179
Figure 3G.1-64. Comparison of Basemat Sectional Moments (E to W SSE) 3G-180
Figure 3G.1-65. Concrete Backfill in Sliding Evaluation 3G-181
Figure 3G.1-66. Detail Local Finite Element Model of RCCV Wall Around Upper Drywell Personnel Airlock Opening 3G-182
Figure 3G.1-67. Additional Reinforcements in RCCV Wall Around Upper Drywell Personnel Airlock Opening (Inside Face) 3G-183
Figure 3G.1-68. Additional Reinforcements in RCCV Wall Around Upper Drywell Personnel Airlock Opening (Outside Face) 3G-184
Figure 3G.1-69. Reinforcements in RCCV Wall Around Upper Drywell Personnel Airlock Opening (Section) 3G-185
Figure 3G.1-70. Reinforcements in RCCV Wall Around Upper Drywell Personnel Airlock Opening (Plan) 3G-186
Figure 3G.1-71a. PCCS Condenser and Supports 3G-187
Figure 3G.1-71b. PCCS Condenser and Supports Details 3G-188
Figure 3G.1-72. Finite Element Model of PCCS Condenser and Supports 3G-189
Figure 3G.2-1. CB Concrete Outline Plan at EL -7400 and Foundation Reinforcement 3G-225
Figure 3G.2-2. CB Concrete Outline Plan at EL –2000/4650 and Section Details 3G-226
Figure 3G.2-3. CB Concrete Outline Plan at EL 9060/13800, Section and Section Detail. 3G-227
Figure 3G.2-4. Finite Element Model of CB (Isometric View) 3G-228
Figure 3G.2-5. Finite Element Model of CB (Foundation Mat) 3G-229
Figure 3G.2-6. Finite Element Model of CB (External Wall: South Side) 3G-230
Figure 3G.2-7. Finite Element Model of CB (External Wall: East Side) 3G-231
Figure 3G.2-8. Finite Element Model of CB (Floor Slab: EL -2000) 3G-232
Figure 3G.2-9. Finite Element Model of CB (Floor Slab: EL 4650) 3G-233
Figure 3G.2-10. Finite Element Model of CB (Floor Slab: EL 9060) 3G-234

Figure 3G.2-11. Finite Element Model of CB (Roof: EL 13800) 3G-235
Figure 3G.2-12. Soil Pressure at Rest 3G-236
Figure 3G.2-13. Sections Where Thermal Loads Are Defined 3G-237
Figure 3G.2-14. Design Seismic Shears and Moments for CB 3G-238
Figure 3G.2-15. Seismic Lateral Soil Pressure 3G-239
Figure 3G.2-16. Force and Moment in Shell Element 3G-240
Figure 3G.2-17. Concrete Backfill in Sliding Evaluation 3G-241
Figure 3G.3-1. Sections Where Thermal Loads Are Defined 3G-265
Figure 3G.3-2. Section Considered for Analysis 3G-266
Figure 3G.3-3. Force and Moment in Shell Element 3G-267
Figure 3G.3-4. Reinforcing Steel of Spent Fuel Pool 3G-268
Figure 3G.3-5. List of FB Wall and Slab Reinforcement 3G-269
Figure 3G.4-1. FWSC Concrete Outline and Typical Rebar Arrangement 3G-297
Figure 3G.4-2. Finite Element Model of FWSC (Isometric View) 3G-298
Figure 3G.4-3a. Finite Element Model of FWSC (Foundation Mat) 3G-299
Figure 3G.4-4. Finite Element Model of FWSC (South FWS Wall) 3G-301
Figure 3G.4-5. Finite Element Model of FWSC (FPE Wall: East and South) 3G-302
Figure 3G.4-6. Finite Element Model of FWSC (FPE Roof Slab, South FWS Roof Slab) 3G-303
Figure 3G.4-7. Sections Where Thermal Loads Are Defined 3G-304
Figure 3G.4-8. Design Seismic Shears and Moments for FWSC (FWS) 3G-305
Figure 3G.4-9. Design Seismic Shears and Moments for FWSC (FPE) 3G-306
Figure 3G.4-10. Force and Moment in Shell Element 3G-307
Figure 3G.4-11. Shear Keys and Concrete Backfill in Sliding Evaluation 3G-308
Figure 3H-1. Control Room Habitability Area 3H-27
Figure 3H-2. Control Room Habitability Area Heat up – 0% Exceedance Maximum Temperature Case 3H-28
Figure 3J-1. Simplified Piping Models 3J-7
Figure 3J-2. Representation of Pipe With Both Ends Supported With a Longitudinal Break 3J-8
Figure 3L-1. Typical Chimney Assembly 3L-33
Figure 3L-2. Typical Steam Dryer Assembly 3L-34

3G. DESIGN DETAILS AND EVALUATION RESULTS OF SEISMIC CATEGORY I STRUCTURES

This appendix presents the structural design and analysis for the Reactor Building (RB), Control Building (CB), Fuel Building (FB) and Firewater Service Complex (FWSC) of the ESBWR Standard Plant. It addresses all applicable items included in Appendix C to United States Nuclear Regulatory Commision (NRC) Standard Review Plan, NUREG-0800, Subsection 3.8.4. Drawings depicted in the Design Control Document (DCD) are not used for construction. Construction drawings meet the technical licensing commitments made in the DCD but are issued under different contractual/industrial rules than the DCD drawings and reflect detailed design configuration. The final design details, and hence final component stresses may be different from those reported here but they will meet the structural acceptance criteria presented in Section 3.8 in accordance with Tier 1 ITAACs in Tables 2.16.5-2, 2.16.6-2, and 2.16.7-2.

3G.1 REACTOR BUILDING

The RB encloses the concrete containment and its internal systems, structures, and components. Located above the concrete containment in the RB are the Isolation Condenser/Passive Containment Cooling System (IC/PCCS) pools (including expansion pools), the buffer pool, which is also used to store the dryer, and the equipment storage pool, which is also used to store the chimney partitions and the separator.

3G.1.1 Objective and Scope

The objective of this subsection is to document the structural design details, inputs and analytical results from the analysis of the ESBWR main building structures encased in the RB. The scope includes the design and analysis of the structure for normal, severe environmental, extreme environmental, and abnormal loads.

3G.1.2 Conclusions

The following are the major summary conclusions on the design and analysis of the RB, the concrete containment and the containment internal structures.

- Based on the results of finite element analyses performed in accordance with the design conditions identified in Subsections 3G.1.3 and 3G.1.5, stresses and/or strains in concrete, reinforcement, liner and containment internal structures are less than the allowable stresses and/or strains per the applicable regulations, codes or standards listed in Section 3.8.
- The factors of safety against floatation, sliding, and overturning of the structure under various loading combinations are higher than the required minimum.
- The thickness of the roof slabs and exterior walls are more than the minimum required to preclude penetration, perforation or spalling resulting from impact of design basis tornado missiles.

3G.1.3 Structural Description

3G.1.3.1 Description of the Reactor Building

3G.1.3.1.1 Reactor Building Structure

The RB structure and the containment structure share the same wall structure which encloses the Gravity-Driven Cooling System (GDCS) pools and the Suppression pool. The RB structure consists of the following areas that are not part of the containment structure.

- RB super structure at and above the refueling floor, up to the support for the bridge crane, including the roof, is made of reinforced concrete floors and walls (floor slabs can also be composite structure). Roof trusses and their supporting columns are made of structural steel.
- IC/PCCS pools (including expansion pools), the equipment storage pool, the reactor well and the buffer pool.
- Rooms at several elevation levels outside the containment but attaching to the containment structure.
- The main steam tunnel that consists of reinforced concrete walls and floor.

The key dimensions of the RB are summarized in Table 3.8-8. Figures 3G.1-1 through 3G.1-7 show the configurations of the RB.

The FB is integrated with the RB in the ESBWR standard plant. The RB and FB share a common wall between them and a large common basemat. The summary of the FB design is described in Section 3G.3.

3G.1.3.1.2 Containment and Containment Structure

The containment is a reinforced concrete containment vessel (RCCV), which encloses the reactor pressure vessel (RPV) and its related systems and components. The containment is divided into a drywell region and a wetwell region with an interconnecting vent system.

The key dimensions of the RCCV are summarized in Table 3.8-1. Figure 3.8-1 shows the configuration of the RCCV.

The containment structure boundary consists of the containment top slab with removable drywell head, the containment cylindrical wall that is also the outer wall of the suppression pool, the suppression pool floor slab, the RPV pedestal that encloses the volume under the RPV, and the basemat. The concrete containment is lined with a steel liner for leak-tightness. The containment cylindrical outer wall extends below the suppression pool floor slab to the basemat. This extension is not part of the containment pressure boundary, however, it supports the upper containment cylinder. The reinforced concrete basemat foundation supports the entire containment system, which includes the RPV pedestal, and extends to support the RB surrounding the containment. The outline drawings are shown in Figures 3G.1-1 through 3G.1-7.

3G.1.3.1.3 Reactor Building Structure/Containment Structure Connections

The RCCV and the RB structure are integrated by the IC/PCCS pool girders at the top of the containment and by floor slabs at elevations that are defined as part of the RB structure and the basemat. The IC/PCCS pool girders are deep reinforced concrete girders, and they are integrated with the containment top slab and with RB walls.

3G.1.3.1.4 Containment Internal Structures

The containment internal structures consist of the diaphragm floor slab, vent wall, GDCS pool walls, reactor shield wall (RSW), and the RPV support bracket. These structures are shown in the general arrangement drawings in this appendix.

The diaphragm floor slab acts as a barrier between the drywell and the wetwell. The diaphragm floor slab is supported on the reinforced concrete containment wall at its outer periphery and on the vent wall at its inner periphery. The diaphragm floor slab is a concrete-filled steel structure. The space between the floor slab top and bottom plates is filled with concrete. The slab is supported by a system of radial beams spaced evenly all around and spanning between the vent wall structure and the reinforced concrete containment wall.

The vent wall structure is also a concrete–filled steel design consisting of two concentric carbon steel cylinders connected together by vertical web plates evenly spaced all around. The vent wall structure is anchored at the bottom into the RPV pedestal and is restrained at the top by the diaphragm floor slab. The cylindrical annulus carries 12 vent pipes and 12 safety relief valve (SRV) downcomer pipes with sleeves, from the drywell into the suppression pool. The space in the cylindrical annulus is filled with concrete.

There are three GDCS pools supported on top of the diaphragm floor slab. The pools on one side are contained by the reinforced concrete containment wall and on the other side by structural steel walls.

The RSW is a thick steel cylindrical structure that surrounds the RPV. It is supported by the RPV support brackets and the reactor pedestal. The function of the RSW is to attenuate radiation emanating from the RPV. In addition, the RSW provides structural support for the RPV stabilizer, the RPV insulation and miscellaneous equipment, piping and commodities. Openings are provided in the RSW to permit the routing of necessary piping to the RPV and to permit in-service inspection of the RPV and piping.

3G.1.4 Analytical Models

3G.1.4.1 Structural Models

The RB and the RCCV including its internal structures are analyzed as one integrated structure utilizing the finite element computer program NASTRAN. The finite element model consists of quadrilateral, triangular, and beam elements. The quadrilateral and triangular elements are used to represent the slabs and walls. Beam elements are used to represent columns and beams. The model is shown in Figures 3G.1-8 to 3G.1-18.

As shown in Figure 3G.1-8, the FB is also included in the model, because the FB is integrated with the RB. The model includes the whole (360°) portion of the RB including the RCCV and

FB taking the application of nonaxisymmetrical loads and the asymmetric layout of the FB structure into consideration.

Liner plates of various thicknesses as shown in Figure 3G.1-48 are included in the model at locations of the pressure boundary of the containment. The liner plate nodal points are connected to the containment nodal points by rigid beams. The liner plate elements are shown in Figure 3G.1-18. Pressure loads in the containment are applied on the liner plate.

The vent wall and the diaphragm floor are concrete-filled structures consisting of steel plates and concrete. The infill concrete is neglected in analysis model conservatively. Steel plates including connecting rib plates and girders are modeled by shell elements. The GDCS pool, the RSW and the RPV support brackets are also included in the analysis model. These structures are modeled by shell elements, except the GDCS pool beams which are modeled by beam elements. The analysis model of these structures is shown in Figure 3G.1-17. For the GDCS pool, the detail stress evaluation is performed using a local model.

The following major penetrations in the concrete containment are included in the model in order to take local reduction of the wall stiffness into consideration. The penetrations in the model are shown in Figures 3G.1-10 and 3G.1-11.

- upper drywell equipment and personnel hatches
- lower drywell equipment and personnel hatches
- wetwell access hatch
- main steam and feedwater pipe penetrations

Small penetrations in the containment are not modeled because their effects on the wall stiffness are negligible.

The containment around an opening is analyzed utilizing a local finite element model. Figure 3G.1-66 shows the detail of the local finite element model of the RCCV wall around the upper drywell Personnel Airlock Opening. The model is composed of the concrete wall, the steel liner plate and the steel opening sleeve. The concrete wall and steel liner plate are modeled by shell elements, and the opening sleeve is modeled by rod elements. Because the analysis model is a local finite element model of the RCCV, the enforced displacements calculated from the RB/FB global finite element model analysis results are applied at the periphery of the model and at the connections with the surrounding slab and wall.

The nodal points are defined by a right hand Cartesian coordinate system X, Y, Z. This system, called the global coordinate system, has its origin located at the center of the containment at the bottom of the RPV, i.e., EL 0. The positive X axis is parallel with the IC/PCCS pool girder in the 180° direction of the containment; the Y axis is perpendicular to the IC/PCCS pool girder in the 90° direction of the containment; the Z axis is vertical upward. This coordinate system is shown in Figure 3G.1-8.

3G.1.4.2 Foundation Models

The foundation soil is represented by soil springs. The spring constants for rocking and translations are determined based on the following soil parameters which correspond to the Soft Site conditions described in Appendix 3A.

- Shear wave velocity: 300 m/s (1000 ft/s)
- Unit weight: 0.0196 MN/m^3 (125 lbf/ft^3)
- Shear modulus: 180 MN/m^2 (26110 psi)
- Poisson's Ratio: 0.478

Soil springs are attached to the bottom of the foundation mat, and the constraints by side soil are not included in the model. The values of the soil springs used in the analysis are shown in Table 3G.1-1. The springs have perfectly elastic stiffness.

These spring values are multiplied by the foundation mat nodal point tributary areas to compute the spring constants assigned to the base slab nodal points.

3G.1.5 Structural Analysis and Design

3G.1.5.1 Site Design Parameters

The key site design parameters are located in Table 3G.1-2.

3G.1.5.2 Design Loads, Load Combinations, and Material Properties

3G.1.5.2.1 Design Loads

3G.1.5.2.1.1 Dead Load (D) and Live Load (L and L_o)

The weights of structures are evaluated using the following unit weights.

- reinforced concrete: 23.5 kN/m^3 (150 lbf/ft^3)
- plain concrete: 22.5 kN/m^3 (143 lbf/ft^3)
- steel: 77.0 kN/m^3 (490 lbf/ft^3)

Weights of major equipment, miscellaneous structures, piping, and commodities are summarized in Tables 3G.1-3 through 3G.1-5.

Live loads on the RB floor and roof slabs are described in Subsection 3.8.4.3.1.1.

For the computation of global seismic loads, the value of floor live load is limited to the expected live load, L_o, during normal plant operation. The values of L_o are 25% of the above full floor live loads, L, when used in combination with seismic and dead loads as described in Subsection 3.8.4.3.1.1.

3G.1.5.2.1.2 Snow and Rain Load

The snow load and rain load is applied to the roof slabs and is taken as shown in Table 3G.1-2. One hundred percent of the snow load is applied when combined with seismic loads.

3G.1.5.2.1.3 Lateral Soil Pressure at Rest

The lateral soil pressure at rest is applied to external walls below grade and is based on soil properties given in Table 3G.1-2. Pressures to be applied to the walls are provided in Figure 3G.1-19.

3G.1.5.2.1.4 Wind Load (W)

The wind load is applied to the roof slabs and external walls above grade and is based on basic wind speed given in Table 3G.1-2.

3G.1.5.2.1.5 Tornado Load (W_t)

The tornado load is applied to the roof slabs and external walls above grade and its characteristics are given in Table 3G.1-2. The tornado load, W_t, is further defined by the following combinations:

$W_t = W_w$

$W_t = W_p$

$W_t = W_m$

$W_t = W_w + 0.5W_p$

$W_t = W_w + W_m$

$W_t = W_w + 0.5W_p + W_m$

where,

W_t = Total Tornado Load

W_w = Tornado Wind Load

W_p = Tornado Differential Pressure Load

W_m = Tornado Missile Load

3G.1.5.2.1.6 Thermal Loads

Thermal loads are evaluated for the normal operating conditions and abnormal (Loss-of-Coolant-Accident [LOCA]) conditions. Figure 3G.1-20 shows the section location for temperature distributions for various structural elements, and Table 3G.1-6 shows the magnitude of equivalent linear temperature distribution.

The evaluation method of temperature effect on the concrete design is based on ACI 349-01 Commentary Figure RA.1.

Two cases, winter and summer, are considered in the analysis.

Stress-free temperature is 15.5°C (60°F).

3G.1.5.2.1.7 Pressure Loads

Table 3G.1-7 shows the pressure loads applied to the RCCV during normal operation, structural integrity test, and the LOCA. Pressure loads in the IC/PCCS pools are provided in Table 3G.1-8.

3G.1.5.2.1.8 Condensation Oscillation and Chugging Loads

The condensation oscillation (CO) and chugging pressure loads along with Dynamic Load Factors (DLF) are provided in Figures 3G.1-21 and 3G.1-22.

3G.1.5.2.1.9 Safety Relief Valve Loads

The SRV loads along with DLF are provided in Figure 3G.1-23.

3G.1.5.2.1.10 Steam Tunnel Subcompartment Pressure

The design pressure in the RB main steam tunnel to account for a main steamline break is 76.0 kPaG (11.0 psig). A conservative pressurization analysis shows that the peak pressure is approximately one-third of this design pressure. Thermal loads need not be included due to short duration of the tunnel pressurization.

3G.1.5.2.1.11 Subcompartment Pressure in Other Compartments

For ESBWR, the Reactor Water Cleanup/Shutdown Cooling (RWCU/SDC) system is considered high energy during normal operation. The maximum design pressure inside the affected subcompartments from the high energy line break of the system is 36 kPaG (5.22 psig). Thermal loads need not be included due to short duration of subcompartment pressurization.

3G.1.5.2.1.12 Annulus Pressurization Loads

The annulus pressurization loads due to feedwater and reactor water cleaup breaks are considered. Annulus pressurization loads contain pressure load and associated jet forces and pipe whip restraint loads.

3G.1.5.2.1.13 Design Seismic Loads

The design seismic loads are obtained by soil – structure interaction analyses, which are described in Appendix 3A. The seismic loads used for design are as follows:

- Figure 3G.1-24: design seismic shears and moments for RB and FB walls
- Figure 3G.1-25: design seismic shears and moments for RCCV
- Figure 3G.1-26: design seismic shears and moments for RPV Pedestal and Vent Wall
- Table 3G.1-9: maximum vertical acceleration

The seismic loads are composed of one vertical and two perpendicular horizontal components. The effects of the three components are combined based on the SRSS method as described in Subsection 3.8.1.3.6.

Seismic lateral soil pressure for wall design is provided in Figure 3G.1-27 using the envelope pressure of the elastic procedure described in ASCE 4-98 Subsection 3.5.3.2 and SASSI results as described in Subsection 3A.8.8.

Seismic member forces for each section are obtained directly from the NASTRAN analysis using these seismic input loads.

3G.1.5.2.2 Load Combinations and Acceptance Criteria

Load combinations and acceptance criteria for the various elements of the RB complex are discussed on the following subsections.

3G.1.5.2.2.1 Reinforced Concrete Containment Vessel

Table 3.8-2 gives a detailed list of various Service and Factored load combinations with acceptance criteria per ASME Section III Division 2. Based on previous experience, critical load combinations are selected for the RCCV design. They are mainly combinations including LOCA loads and seismic loads as shown in Table 3G.1-10. The acceptance criteria for the selected combinations are also included in Table 3G.1-10.

3G.1.5.2.2.2 Steel Containment Components

Table 3.8-4 gives a detailed list of various load combinations with acceptance criteria per ASME Section III Division 1, Subsection NE. For the drywell head, the loads of W, W', R_o, R_a and Y are not direct loads and their indirect effects through the supporting RCCV top slab are negligibly small.

3G.1.5.2.2.3 Containment Internal Structures

Table 3.8-7 gives a detailed list of various load combinations with acceptance criteria per ANSI/AISC N690.

3G.1.5.2.2.4 Reactor Building Concrete Structures Including Pool Girders

Load combinations and acceptance criteria for the RB concrete structures are described in Subsections 3.8.4.3.1.2 and 3.8.4.5.1, respectively. Based on previous experience, critical load combinations are selected for the RB design. They are mainly combinations including LOCA loads and seismic loads as shown in Table 3G.1-11. The acceptance criteria for the selected combinations are also included in Table 3G.1-11.

3G.1.5.2.3 Material Properties

3G.1.5.2.3.1 Concrete

Properties of concrete used for the design analyses are shown in Table 3G.1-12.

Concrete has a tendency to change properties when subjected to elevated temperatures. For the ESBWR design, reduction of concrete strength due to high temperature is determined based upon the average value of the following upper bound and lower bound equations excerpted from Reference 3G.1-1.

- Lower bound reduction factor
  - $\phi = 1.0 - 0.0030\ (T-21.1)$ $\quad$ 21.1°C (70°F) ≤ T ≤ 121.1°C (250°F)
  - $\phi = 0.70 - 0.00083\ (T-121.1)$ $\quad$ 121.1°C (250°F) ≤ T
- Upper bound reduction factor
  - $\phi = 1.0$ $\quad$ T ≤ 260.0°C (500°F)
  - $\phi = 1.0 - 0.00081\ (T-260.0)$ $\quad$ 260.0°C (500°F) ≤ T

Young's modulus for concrete is also determined based upon the average value of the following upper bound and lower bound equations excerpted from Reference 3G.1-1.

- Lower bound reduction factor

- $\phi = 1.0 - 0.0069\ (T-21.1)$ 21.1°C (70°F) ≤ T ≤ 93.3°C (200°F)
- $\phi = 0.50 - 0.0009\ (T-93.3)$ 93.3°C (200°F) ≤ T

- Upper bound reduction factor
  - $\phi = 1.0 - 0.00056\ (T-21.1)$ 21.1°C (70°F) ≤ T ≤ 204.4°C (400°F)
  - $\phi = 0.90 - 0.0015\ (T-204.4)$ 204.4°C (400°F) ≤ T

The design temperature of the drywell is 171°C (340°F) as shown in Table 1.3-3, and it satisfies the concrete temperature limit, 177°C (350°F), for accident or short term period specified in ASME Section III, Subsection CC-3440.

3G.1.5.2.3.2 Reinforcing Steel

Reinforcing steel is deformed billet steel conforming to ASTM A-615 grade 60. Minimum yield strength, F_y, is 413.6 MPa (60 ksi).

Reinforcing steel also has tendency to decrease in strength at elevated temperatures. The reduction of reinforcing steel strength is based upon the following equation excerpted from Reference 3G.1-1.

- Reduction Factor
  - $\phi = 1.0 - 0.000873\ (T-21.1)$ 21.1°C (70°F) ≤ T ≤ 204.4°C (400°F)

3G.1.5.2.3.3 Structural Steel

Properties of structural steel used for the design analyses are included in Table 3G.1-12. ASTM A-36 is used for the steel plates of the composite floor slabs.

3G.1.5.3 Stability Requirements

The RB foundation has the following safety factors against overturning and sliding. Because the impact on the stability by seismic load is larger than wind and tornado, the load combinations for W and W_t, which are shown in Table 3.8-14, are excluded.

Load Combination	Overturning	Sliding	Floatation
D + H + E’	1.1	1.1	
D + F’			1.1

Where
D = Dead Load, F’ = Buoyant forces of design basis flood
H = Lateral soil pressure, E’ = Safe Shutdown Earthquake

3G.1.5.4 Structural Design Evaluation

The evaluation of the containment structure, the containment internal structures, and the RB structures is based on the results from the load combinations indicated in Subsection 3G.1.5.2.2.

Figure 3G.1-28 shows the location of the sections that are selected for evaluation of reinforced concrete structures. They are selected, in principle, from the center and both ends of walls and

slabs, where it is reasonably expected that the critical stresses appear based on engineering experience and judgment. The computer program SSDP-2D is used for the evaluation of stresses in rebar and concrete. The input to SSDP-2D consists of rebar ratios, material properties, and element geometry at the section under consideration together with the forces and moments from the NASTRAN analysis, which are shown in Tables 3G.1-13 through 3G.1-21. Element forces and moments listed in the tables are defined with relation to the element coordinate system shown in Figure 3G.1-29. Figures 3G.1-30 through 3G.1-38 indicate deformations of structures obtained by NASTRAN analyses for the loads corresponding to Table 3G.1-13 through 3G.1-21.

Figure 3G.1-39 shows a flow chart for the structural analysis and design. Figures 3G.1-40 through 3G.1-47 and Figures 3G.1-67 through 3G.1-70 present the design drawings used for the evaluation of the containment and the RB structural design. Figures 3G.1-48 through 3G.1-50 show the design details of containment liner plate. Figures 3G.1-51 through 3G.1-54 show the design details of containment major penetrations. Figures 3G.1-55 through 3G.1-59 show the details of containment internal structures. Figures 3G.1-71a and 3G.1-71b show the details of the passive containment cooling system (PCCS) condenser and supports.

3G.1.5.4.1 Containment Structure

Tables 3G.1-22 through 3G.1-26 show the resultant combined forces and moments in accordance with the selected load combinations listed in Table 3G.1-10. Table 3G.1-27 lists the sectional thicknesses and rebar ratios used in the evaluation. At each section, in general, three elements are analyzed at azimuth 0°, 90° and 135°.

Tables 3G.1-28 through 3G.1-32 show the rebar and concrete stresses at these sections for the representative elements. Tables 3G.1-33 and 3G.1-34 summarize evaluation results for transverse shear and tangential shear in accordance with ASME Section III, Division 2, Article CC-3520.

Table 3G.1-35 shows the maximum strains of containment liner plate. Table 3G.1-36 shows the stress summary of drywell head.

Table 3G.1-60 shows the stress summary of PCCS condenser and support.

3G.1.5.4.1.1 Containment Wall Including RPV Pedestal

Sections 1 through 9 shown in Figure 3G.1-28 are considered critical sections for the containment wall including the RPV pedestal. Maximum stress in the meridional rebar is found to be 320.0 MPa (46.41 ksi) at Section 1 near the bottom of the RPV Pedestal due to load combination CV-11a, as shown in Table 3G.1-31. The maximum stress in the circumferential rebar is found to be 326.0 MPa (47.28 ksi), which occurs also at Section 6, the top of the RCCV Wetwell due to load combination CV-11a, as shown in Table 3G.1-31. The maximum concrete stress is found to be 21.7 MPa (3.15 ksi), which occurs at Section 3 due to load combination CV-11b.

The maximum transverse shear stress is found to be 4.44 MPa (0.64 ksi) at Section 1 for the load combination CV-11b. The amounts of shear ties provided satisfy the required values at all sections, as indicated in Table 3G.1-33.

As for tangential shear, the maximum stress of 3.58 MPa (0.52 ksi) is found at Section 4, the bottom of the Wetwell, due to the combination CV-11a. The value is less than the allowable

tangential shear stress provided by orthogonal reinforcement, which is described in Table 3.8-3. The amounts of reinforcement provided satisfy the required values at all sections, as indicated in Table 3G.1-34.

Table 3G.1-35 shows liner plate strains. The liner maximum strain is found to be 0.0041 at Section 6, which is within allowable limits given in Table CC-3720-1, ASME Code Section III, Division 2. The liner stresses during construction are kept within the allowable values found in Table CC-3720-1 of ASME Code Section III, Division 2 by limiting concrete placement pressure to a maximum of 167 kPa (24.22 psi) for the top slab, 48 kPa (6.96 psi) for the upper drywell/lower drywell wall and 32 kPa (4.64 psi) for the wetwell wall.

3G.1.5.4.1.2 Containment Top Slab and Suppression Pool Slab

Sections 12 through 17 are examined for the Containment Top Slab and Suppression Pool Slab. The locations of these sections are shown in Figure 3G.1-28. The maximum rebar stresses are found to be 275.4 MPa (39.94 ksi) at Section 16 due to the load combination CV-11b in the Top Slab, and 349.4 MPa (50.68 ksi) at Section 12 due to the combination CV-11a in the Suppression Pool Slab. The maximum concrete stresses are 20.8 MPa (3.02 ksi) and 25.6 MPa (3.71 ksi) in the Top Slab and the Suppression Pool Slab, respectively.

The maximum transverse shear stresses are found to be 1.96 MPa (0.28 ksi) at Section 15 for the load combination CV-7b in the Top Slab, and 4.33 MPa (0.63 ksi) at Section 14 for the combination CV-7a in the Suppression Pool Slab. The amounts of shear ties provided satisfy the required values at all sections, as indicated in Table 3G.1-33.

Maximum liner strain is found to be 0.0026 at Section 12 as shown in Table 3G.1-35 and is within ASME Code allowable.

3G.1.5.4.1.3 Containment Foundation Mat

Sections 10 and 11 are evaluated for the part of the concrete containment in the foundation mat. The sections are shown in Figure 3G.1-28. The maximum rebar stress is calculated as 172.5 MPa (25.02 ksi) at Section 11 just inside the RPV Pedestal and is shown in Table 3G.1-32. The maximum transverse shear stress of 1.21 MPa (0.18 ksi) is found also at the Section 11 for the load combination CV-11b.

The liner plate maximum strain is found to be 0.0004 at Section 11 as shown in Table 3G.1-35.

3G.1.5.4.1.4 Drywell Head

Figure 3G.1-51 shows the design details. The highest stresses are summarized in Table 3G.1-36. The stresses except PL+Pb+Q at service Level A and B are well within the allowable stress limits. PL+Pb+Q at service Level A and B exceeds allowable, however, it meets all requirements for simplified elastic-plastic analysis stipulated in NE-3228.3 of ASME Boiler and Pressure Vessel (B&PV) Code, Sec. III.

Simplified Elastic-Plastic Analysis

The range of primary plus secondary stress intensity S_n is 797 MPa (116 ksi) and the allowable of $3S_{m1}$ is 456 MPa (66.1 ksi) from Table 3G.1-36. S_n exceeds $3S_{m1}$, so simplified elastic-plastic analysis is required. The results of comparison against each requirement of NE-3228.3 are as follows.

(1) NE-3228.3 (a)

The range of primary plus secondary membrane plus bending stress intensity, excluding thermal bending stress is 392 MPa (56.9 ksi) from the result of FEA analysis.

(2) NE-3228.3 (b)

The values of S_a used for entering the design fatigue curve is multiplied by the factor K_e. The values of m and n are decided as 3 and 0.2 respectively from Table NE-3228.3(b) -1 of ASME B&PV Code, Sec. III. Because S_{m1} is 152 MPa (22.0 ksi) from Table 2A of ASME B&PV Code, Sec. II, Part D, $3 \cdot m \cdot S_{m1}$ is calculated as 1368 MPa (198 ksi). S_n = 797 MPa (116 ksi) is between $3 \cdot S_{m1}$ = 456 MPa (66.1 ksi) and $3 \cdot m \cdot S_{m1}$ = 1368 MPa (198 ksi), so K_e is calculated by the following Formula:

$$K_e = 1.0 + \left[(1-n)/n \cdot (m-1)\right] \cdot \left[(S_n/3 \cdot S_{m1}) - 1\right] = 2.5$$

(3) NE-3228.3 (c)

Fatigue evaluation is conducted as follows:

$S_a = K_e \cdot S_n$ = 1993 MPa (289 ksi)

E_1 = 207 GPa (30000 ksi)

E_2 = 194 GPa (28100 ksi)

Where

E_1: Modulus of elasticity given on the design fatigue curve from Figure I-9.1 of Appendix I of Sec. III.

E_2: Modulus of elasticity at 340°F (171°C) from Table TM-1 of Sec. II, Part D

$S_a' = S_a \cdot (E_1/E_2)$ = 2131 MPa (309 ksi)

S_a for 10 cycles is 3999 MPa (580 ksi) from Table I-9.1 (UTS ≤ 80 ksi) and N for S_a' = 2131 MPa (309 ksi) is obtained as 38 from Table I-9.1, General Note (b). So the requirement of NE-3228.3 (c) is satisfied.

(4) NE-3228.3 (d)

Because an accident temperature T_a is not a cyclic load, the thermal ratcheting can be neglected.

(5) NE-3228.3 (e)

From Table NE-3228.3(b)-1, the maximum temperature T_{max} is 370°C (700°F) for carbon steel. T_a is 171°C (340°F), so it satisfies this requirement.

(6) NE-3228.3 (f)

Specified minimum yield strength S_y and specified minimum tensile strength S_u of SA-516 Gr. 70 are 262 MPa (38 ksi) and 483 MPa (70 ksi) respectively. The ratio of S_y to S_u is calculated as 0.543. This value is below 0.80. So it satisfies this requirement.

Fatigue Evaluation

Fatigue evaluation is performed in accordance with ASME B&PV Code Section III, Subsection NE-3221.5(d) in which the limits on peak stress intensities as governed by fatigue are considered and satisfied when the Service Loadings meet the stipulated condtion.

3G.1.5.4.1.5 PCCS Condenser

Figures 3G.1-71a and 3G.1-71b show the design details. A finite-element analysis model supplemented with hand calculation is used to determine the stresses in the different components of the PCCS condenser and supports. The finite-element analysis is performed using ANSYS computer code. The 3D finite-element model presented in Figure 3G.1-72 is used. The 3D steel frame structure and the vertical tubes are modeled by beam-type elements. The rest of PCCS condenser components are modeled by shell-type elements. Static and dynamic analyses are performed to evaluate the different loads. The dynamic load cases are analyzed by the response spectrum method. The stress evaluation is performed for loads and load combinations in accordance with Table 3.8-4 and associated acceptance criteria for pressure retaining components of the condenser. The condenser supports are designed to the same loads and load combinations in accordance with the acceptance criteria of ASME Code, Section III, Subsection NF.

The calculated stresses in various elements of the PCCS condenser and supports are shown in Table 3G.1-60 and are within allowable stress limits.

3G.1.5.4.2 Containment Internal Structures

Tables 3G.1-37 through 3G.1-44 show the summary of stress analysis results for containment internal structures.

The type of analyses for various loads considered for the containment internal structures, such as diaphragm floor, vent wall, RPV support bracket, RSW and GDCS pool are:

(1) Dead load

Static analysis is performed for the dead load to all containment internal structures. Hydrostatic loads of pool water are also applied statically to vent wall and GDCS pool.

(2) Pressure load

Static analysis is performed for the pressure load (P_o and P_a) applied to diaphragm floor and vent wall.

(3) Thermal load

Static analysis is performed for the thermal load (T_o and T_a) to all internal structures. All steel temperature is the same as atmospheric temperature. The temperature of the intermediate node of vent wall rib plate is the average value of outer and inner plate ones.

(4) Seismic load

Static analyses are performed for the seismic load on diaphragm floor, vent wall, RPV support bracket and RSW in the integral NASTRAN model, and on GDCS pool in the GDCS pool local model.

In this response spectra analysis, it is assumed that all pool water mass is distributed uniformly on the GDCS pool wall and RCCV wall. This is considered as a conservative assumption, therefore sloshing is not considered in GDCS pool local model. For integral NASTRAN model, however, sloshing load is considered as the static pressure load on D/F upper surface and static reaction load from GDCS pool wall. The results from integral NASTRAN model due to these loads are used for the structural integrity evaluation of the structures other than GDCS pool, while the results from GDCS pool local model are used for evaluation of GDCS pool itself.

(5) Hydrodynamic load

Static analysis is performed for the hydrodynamic load (CO, CH and SRV) on vent wall taking DLF = 2 into account.

(6) Pipe Break loads consist of annulus pressurization load, jet impingement and pipe-whip restraint loads

These loads acting on the RSW are first analyzed for dynamic response using the NASTRAN beam model. The resulting maximum values of bending moment and shear force are then applied to the integral NASTRAN static analysis model.

The Square Root of the Sum of the Squares (SRSS) method is used to combine the stresses due to dynamic loads, such as seismic, hydrodynamic and annulus pressurization loads, for all steel structures.

3G.1.5.4.2.1 Diaphragm Floor

Design of Structural Components

The design of the diaphragm floor is based on the elastic analysis results obtained from model described in Subsection 3G.1.4. Figure 3G.1-55 shows design details. Table 3G.1-37 summarizes the highest stresses in various structural elements of the diaphragm floor slab. All stresses are within allowable stress limits.

Design of Anchorage

Figure 3G.1-56 shows diaphragm floor anchorage into the RCCV wall. Rebars are used for anchoring the steel plates. Threaded couplers are used so that the anchor bars can be connected after installation of the reinforcing steel of the RCCV wall. The anchorage is designed so as to avoid interference with the RCCV reinforcing steel. Anchorage requirements for various loading combinations and the capacity of anchorage provided is shown in Table 3G.1-38.

3G.1.5.4.2.2 Vent Wall Structure

Design of Structural Components

Figure 3G.1-57 shows the design details. Highest stresses in inner cylinder, outer cylinder and the web plates are summarized in Table 3G.1-39. The stresses are shown to be within allowable stress limits.

Design of Anchorage

Figure 3G.1-57 shows vent wall anchorage into the RCCV wall. Rebars are used for anchoring the steel plates. Threaded couplers are used so that the anchor bars can be connected after

installation of the reinforcing steel of the RCCV wall. The anchorage is designed so as to avoid interference with the RCCV reinforcing steel. Anchorage requirements for various loading combinations and the capacity of anchorage provided is shown in Table 3G.1-42.

3G.1.5.4.2.3 Reactor Shield Wall

The RSW is designed to resist the loads and loading combinations discussed in Subsections 3G.1.5.2. Annulus pressurization loads are also considered.

Figure 3G.1-58 shows the design details. The highest stresses are summarized in Table 3G.1-40. The stresses are well within the allowable stress limits.

3G.1.5.4.2.4 RPV Support Bracket

Design of Structural Components

Figure 3G.1-57 shows the design details. The calculated stresses in various elements of the support bracket are shown in Table 3G.1-41 and are within allowable stress limits.

Design of Anchorage

Figure 3G.1-57 shows RPV support bracket anchorage into the RCCV wall. Rebars are used for anchoring the steel plates. Threaded couplers are used so that the anchor bars can be connected after installation of the reinforcing steel of the RCCV wall. The anchorage is designed so as to avoid interference with the RCCV reinforcing steel. Anchorage requirements for various loading combinations and the capacity of anchorage provided is shown in Table 3G.1-42.

3G.1.5.4.2.5 Gravity-Driven Cooling System Pool

Design of Structural Components

Figure 3G.1-59 shows the design details. Highest stresses are summarized in Table 3G.1-43. The stresses are within allowable stress limits.

Design of Anchorage

Threaded mechanical coupler with anchor bars are used as shown in Figure 3G.1-59. Table 3G.1-44 shows the anchorage requirements and capacity of anchorage provided.

3G.1.5.4.3 Reactor Building

Tables 3G.1-45 through 3G.1-49 show the resultant combined forces and moments in accordance with the selected load combinations listed in Table 3G.1-11. Table 3G.1-50 lists the sectional thicknesses and rebar ratios used in the evaluation. At each section, in general, three elements are analyzed at azimuth 0°, 90° and 135° (or 45°).

Tables 3G.1-51 through 3G.1-55 show the rebar and concrete stresses at these sections for the representative elements. Table 3G.1-56 summarizes evaluation results for transverse shear in accordance with ACI 349, Chapter 11.

Sections 18 through 31 shown in Figure 3G.1-28 are analyzed for the RB outside the containment. Sections 18 to 23 are selected for the RB shear walls, Section 24 for the basemat outside the containment, Sections 25 to 27 for the RB slabs, Sections 28 to 30 for the IC/PCCS pool girders and Section 31 for the Main Steam tunnel wall and slab.

3G.1.5.4.3.1 RB Shear Walls

The maximum rebar stress of 366.1 MPa (53.10 ksi) is found in the vertical rebar at Section 21 due to the load combination RB-9b as shown in Table 3G.1-55. The maximum horizontal rebar stress is found to be 352.0 MPa (51.05 ksi) also at Section 22 due to the load combination RB-9b as shown in Table 3G.1-55. The maximum transverse shear force is found to be 4.69 MN/m (26.80 kips/in) against the shear strength of 6.59 MN/m (37.60 kips/in) at Section 20, the top of the cylindrical wall below the RCCV wall.

3G.1.5.4.3.2 RB Foundation Mat Outside Containment

Section 24 is selected for the foundation mat outside the containment at the junction with the cylindrical wall below the RCCV wall. The maximum rebar stress of 327.4 MPa (47.49 ksi) is found in the top rebar as shown in Table 3G.1-54. The maximum bottom rebar stress is found to be 133.6 MPa (19.38 ksi) also as shown in Table 3G.1-54. The maximum transverse shear force is found to be 10.74 MN/m (61.30 kips/in) against the shear strength of 16.03 MN/m (91.50 kips/in).

3G.1.5.4.3.3 RB Floor Slabs

Sections 25 to 27 are selected for the floor slabs at elevations EL 4650, EL 17500 and EL 27000 (see Figure 3G.1-28) at their junction with the RCCV. Floor slabs are composite structures, which are reinforced by rebars at their top surfaces and by steel plates at the bottom surfaces, as described in Subsection 3.8.4.1.1. However, the slabs surrounding the Main Steam (MS) tunnel are constructed of conventional reinforced concrete. Among the elements at Sections 26 and 27, Element #96113 and 98424 are included in the MS tunnel slabs.

The maximum rebar stress of 346.1 MPa (50.20 ksi) is found at Section 26 as shown in Table 3G.1-53, whereas the maximum stress of steel plate is found to be 150.2 MPa (21.78 ksi) at Section 26 as shown in Table 3G.1-55. The maximum transverse shear force is found to be 8.16 MN/m (46.60 kips/in) against the shear strength of 9.08 MN/m (51.80 kips/in).

3G.1.5.4.3.4 Pool Girders

The maximum rebar stress of 263.4 MPa (38.20 ksi) is found in the horizontal rebar at Section 29 as shown in Table 3G.1-55, whereas the maximum vertical rebar stress is found to be 249.0 MPa (36.11 ksi) at Section 28 as shown in Table 3G.1-55. The maximum transverse shear force is found to be 1.10 MN/m (6.28 kips/in) against the shear strength of 5.31 MN/m (30.30 kips/in).

3G.1.5.4.3.5 Main Steam Tunnel Floors and Walls

Section 31 is selected for the MS tunnel wall (Element #150122) and slabs (Elements #96611 and #98614). The MS tunnel is composed of the reinforced concrete structures as described in Subsection 3G.1.5.4.3.3.

The maximum rebar stress is found to be 220.5 MPa (31.98 ksi) in Table 3G.1-51, and the maximum transverse shear force is found to be 0.47 MN/m (2.68 kips/in) against the shear strength of 3.70 MN/m (21.1 kips/in).

3G.1.5.5 Foundation Stability

The RB, the concrete containment and the FB share a common foundation. The stabilities of the foundation against overturning, sliding and floatation are evaluated. The energy approach is used in calculating the factor of safety against overturning.

The factors of safety against overturning, sliding and floatation are given in Table 3G.1-57. All of these meet the acceptance criteria given in Table 3.8-14. In the sliding evaluation the gap between the building and excavated soil is backfilled with concrete up to the top level of the basemat as shown in Figure 3G.1-65.

Maximum soil bearing stress is found to be 699 kPa (14600 psf) due to dead plus live loads.

The maximum bearing stresses shown in Table 3G.1-58 are evaluated using the Energy Balance Method (Reference 3G.1-2). In order to verify the results, toe pressures obtained by the finite element analyses using the RB/FB global model are compared with the values in Table 3G.1-58. As a result, the bearing pressures calculated by the Energy Balance Method envelop the pressures of finite element analyses.

A series of parametric analyses are performed to verify the assumptions and results of the global finite element analysis is used as the baseline for the basemat design.

- Lateral variations of soil stiffness are evaluated using the global finite element model. Analyses are performed assuming "Hard spot" and "Soft spot" under the RPV Pedestal area.
- Construction loads are evaluated in the design of the basemat. The analyses focus on the response of the basemat during the early stage of construction when it could be susceptible to differential loading and deformations.
- The analyses are performed to confirm acceptability of allowable total and differential settlement that are specified over the length of the foundation.

Details are provided in Subsections 3G.1.5.5.2 through 3G.1.5.5.4.

3G.1.5.5.1 Effect of Basemat Uplift

As described in Appendix 3G.1.4.2, the foundation soil is represented by elastic soil springs which resist both compression and tension. However, actual foundation soil cannot bear tensile force. This difference has an influence on the stresses in the basemat, if the basemat is uplifted due to design loads. Therefore, analyses to evaluate the effect of potential uplift of the basemat are performed using the RB/FB global finite element model shown in Figure 3G.1-8.

An iterative approach is used. Based on the result from the initial analysis, the tension capability is removed in the next iteration for those springs that are in tension. This iterative process is continued until there are no more springs in tension.

Analyses are performed for the horizontal Safe Shutdown Earthquake (SSE) loads. Figures 3G.1-60 through 3G.1-64 show the comparison of the sectional deformations of the basemat and the bending moments generated in the basemat respectively at the final step of iteration. In the area close to the RCCV wall, bending moments are higher than that of the linear analysis results; however the resulting stresses in the concrete and reinforcement for the design "SSE + LOCA" load combination are still below the code allowables with large margins as

shown in Table 3G.1-59. Therefore, it can be concluded that the effect of uplift is negligible to the linear analysis using the global finite element model.

3G.1.5.5.2 Effect of Horizontal Variation of Soil Spring

To account for potential horizontal variation of foundation soil stiffness over the basemat width, stiff soil springs are considered under the RPV Pedestal area assuming linear variation to the edge of the mat. The RPV Pedestal is selected because it produces the largest clear span for the mat and is likely to be the first structure constructed on the mat. This is used as the "Hard Spot". In addition, the inverted variation, i.e. softer soil springs assumed under the RPV Pedestal area, is also considered and called the "Soft Spot". Based on the analysis results for these soil conditions, some of the "Soft Spot" case results predict larger mat bending moments than the uniform soil condition. However, the DCD design envelopes the results of horizontal variation of soil spring as long as the ratio of spring stiffness at the basemat center to that at the basemat edge does not exceed 3. This spring stiffness ratio converts to $\sqrt{3}$ (1.7) for the corresponding shear wave velocity ratio.

3G.1.5.5.3 Effect of Construction Sequence

The basemat design is checked against the loads expected during construction of the basemat. The RB/FB basemat is divided into 7 zones for concrete pour and these zones are investigated for three possible construction sequences. The moment differences between sequences considered are negligibly small in comparison with the moments used in the basemat design. In addition to basemat construction sequence, the impact of the building structures construction sequence, i.e., RPV Pedestal, RCCV and walls, on the basemat design is also investigated. The evaluation results confirm that the building structures construction sequence has negligible effect on the basemat design. These studies include horizontal soil spring variations, "Hard Spot" and "Soft Spot" as described in Subsection 3G.1.5.5.2.

The actual construction sequence, if substantially different from the sequences considered in the design, is ensured not to adversely impact the basemat design.

3G.1.5.5.4 Foundation Settlement

The basemat design is checked against the normal and differential settlement of the RB/FB. It is found that the basemat can resist the maximum mat foundation corner settlement of 103 mm (4.0 in) and the settlement averaged at four corners of 65 mm (2.6 in). The relative displacement between two corners along the longest dimension of the building basemat calculated under linearly varying soil stiffness is 77 mm (3.0 in). The estimated differential settlement between buildings (RB/FB and CB) is 85 mm (3.3 in). These values are specified as maximum settlements in Table 2.0-1.

3G.1.5.6 Tornado Missile Evaluation

The minimum thickness required to prevent penetration, concrete spalling and scabbing is evaluated. The methods and procedures are shown in Subsection 3.5.3.1.1. The minimum thickness required is less than the minimum 1000 mm (39.4 in) and 700 mm (27.6 in) thickness provided for the RB external walls and roof, respectively.

3G.1.6 References

3G.1-1 Burns & Roe, "State-of-the-Art Report on High Temperature Concrete Design," prepared for US. Department of Energy, Document No. DOE/CH/94000-1, November 1985.

3G.1-2 Tseng, W.S. and Liou, D.D., “Simplified Methods for Predicting Seismic basemat Uplift of Nuclear Power Plant Structures, Transactions of the 6th International Conference on SmiRT”, Paris, France, August 1981.

Table 3G.1-1

Soil Spring Constants for the RB Analysis Model

Direction of Spring		Loads	Stiffness ($MN/m/m^2$)
Horizontal	X-direction	All	9.107
	Y-direction	All	9.654
Vertical		Horizontal Seismic Loads	38.35
		Other Loads	13.66

Table 3G.1-2

Site Design Parameters

Parameter	Value(s)
Soil	
Minimum Shear Wave Velocity, m/s (ft/s)	300 (1000)
Maximum Ground Water Level, m (ft)	0.61 (2.0) below plant grade
Maximum Flood (or Tsunami) Level, m (ft)	0.30 (1.0) below plant grade
Maximum Ground Snow Load (100-year recurrence interval), kPa (lbf/ft^2)**	2.394 (50)
Design Exterior Temperatures	
Summer, °C (°F)***	46.1 (115)
Winter, °C (°F)	-40.0 (-40)
Seismology: For seismic design parameters, refer to Subsection 3.7.1.	
Extreme Wind	
Basic Wind Speed (100-year recurrence interval (3-sec gust)), m/s (mph)*	67.1 (150)
Exposure Category	Exposure D
Tornado	
Maximum Tornado Wind Speed, m/s (mph)	147.5 (330)
Maximum Rotational Speed, m/s (mph)	116.2 (260)
Translational Speed, m/s (mph)	31.3 (70)
Radius, m (ft)	45.7 (150)
Pressure Drop, kPa (psi)	16.6 (2.4)
Rate of Pressure Drop, kPa/s (psi/s)	11.7 (1.7)
Missile Spectrum	Spectrum I of SRP 3.5.1.4, Rev. 2 applied to full building height.
Maximum Rainfall**	
Design Rainfall, cm/hr (in/hr)	49.3 (19.4)
48-hour Winter Rainfall, cm (in)	91.4 (36)

Note * Equivalent to 62.6 m/s (140 mi/hr) 50-year recurrence interval wind speed (3-sec gust) with importance factor of 1.15 per ASCE 7-02.

** Based on probable maximum precipitation (PMP) for one hour over 2.6 km^2 (one square mile) with a ratio of 5 minutes to one hour PMP of 0.32 as found in National Weather Source Publication Hydrometeorology Report No. 52 (HMR-52). 49.3 cm/hr (19.4 in/hr) for maximum rainfall rate is selected for design. The maximum short term rate selected is 15.7 cm (6.2 in) in 5 minutes. The roof scuppers and drains are designed independently to handle the PMP or 48-hour probable maximum winter precipitation (PMWP) with no more than an average depth of 100 mm (4 in) of water accumulation on the roof. The roof is designed for 2873 Pa (60 psf) as live load category on all Seismic Category I structures and accommodates design roof snow load and 48-hour PMWP. ASCE 7-02 requirements for snow are used to analyze the various roof geometries and heights.

*** Steady state; 47.2°C (117°F) allowed for short term.

Table 3G.1-3

Equipment and Hydrostatic Loads inside RCCV

Description	Weight
Reactor Pressure Vessel (normal operating condition)	21600 kN
Drywell Top Head (including refueling facilities bulkhead plate)	1100 kN
Top Slab	
a. Liner below slab	2.5 kN/m^2
b. Miscellaneous attachments below slab	2.4 kN/m^2
Upper Drywell	
a. Wall Liner	2.7 kN/m^2
b. Personal Airlock (EL17500)	200 kN
c. Equipment Hatch (EL17500)	110 kN
d. Miscellaneous attachments to wall	2.4 kN/m^2
GDCS Pool	
a. Water (H=6.8 m)	67 kN/m^2
Wetwell	
a. Water (H=5.5 m) HWL	54 kN/m^2
b. Wall Liner	1.6 kN/m^2
c. Floor Liner	2.4 kN/m^2
d. Access Hatch (EL13570)	90 kN
e. Quenchers (10 units)	510 kN
f. Miscellaneous attachments to wall	2.4 kN/m^2
Lower Drywell	
a. Wall Liner	3.1 kN/m^2
b. Floor Liner	0.6 kN/m^2
c. Sacrificial (basaltic) concrete (H=1.6 m)	36 kN/m^2
d. Personal Airlock (EL-6400)	200 kN
e. Equipment Hatch (EL-6400)	110 kN
f. Miscellaneous attachments to wall	2.4 kN/m^2
RCCV Internal Structures except Diaphragm Floor	
a. Equipment and piping on the slab	2.4 kN/m^2
Diaphragm Floor (excluding GDCS pool areas)	
a. Equipment and piping on the slab	9.8 kN/m^2

Table 3G.1-4

Equipment and Hydrostatic Loads in RB Pools

Description	Weight	Remarks
Reactor Well		
a. Water (H=6.7m)	66 kN/m^2	
b. Wall Liner	1.0 kN/m^2	
c. Floor Liner	1.6 kN/m^2	
Equipment Storage Pool		
a. Water (H=6.7m)	66 kN/m^2	
b. Wall Liner	1.0 kN/m^2	
c. Floor Liner	1.6 kN/m^2	
d. Steam Dryer, Steam Separator	66 kN/m^2	During refueling
Fuel Buffer Pool		
a. Water (H=6.7m)	66 kN/m^2	
b. Wall Liner	1.0 kN/m^2	
c. Floor Liner	1.6 kN/m^2	
d. Fuel Storage Racks	153 kN/m^2	During refueling
IC/PCCS Pools		
a. Water (H=4.8m)	47 kN/m^2	
b. Wall Liner	1.0 kN/m^2	
c. Floor Liner	1.6 kN/m^2	
d. IC heat exchanger	333 kN/unit	
e. PCCS heat exchanger	233 kN/unit	
Inclined Fuel Transfer Tube Pool		
a. Water (H=11.64m)	114 kN/m^2	
b. Wall Liner	1.0 kN/m^2	
c. Floor Liner	1.6 kN/m^2	
IC/PCCS Expansion Pools		
a. Water (H=4.8m)	47 kN/m^2	
b. Wall Liner	1.0 kN/m^2	
c. Floor Liner	1.6 kN/m^2	
Equipment Storage Pool Gate	300 kN	
Buffer Pool Gate	50 kN	
Inclined Fuel Transfer Tube Pool Gate	50 kN	

Table 3G.1-5

Miscellaneous Structures, Piping, and Commodity Loads on RB Floor

Elevation (mm)	Weights	Remarks
52,400	2.4 kN/m^2 (50psf)	
34,000	2.4 kN/m^2 (50psf)	
27,000	2.4 kN/m^2 (50psf)	
17,500	2.4 kN/m^2 (50psf) 20.0 kN/m^2 (415psf)	 Main Steam Tunnel
13,570	2.4 kN/m^2 (50psf)	
9,060	2.4 kN/m^2 (50psf)	
4,650	2.4 kN/m^2 (50psf)	
-1,000	2.4 kN/m^2 (50psf)	
-6,400	2.4 kN/m^2 (50psf)	
-11,500	2.4 kN/m^2 (50psf)	

Table 3G.1-6

Equivalent Linear Temperature Distributions at Various Sections

Section*1	Side*2		Equivalent Linear Temperature*3 (°C)					
			Normal Operation Winter		DBA (6 min) Winter		DBA (72 hr) Winter	
	1	2	Td	Tg	Td	Tg	Td	Tg
C1	DW	RM	33.5	38.1	34.7	45.2	58.2	127.3
C2	WW	RM	26.5	26.7	27.4	32.0	47.0	101.0
C3	SP	RM	28.2	29.5	28.8	32.7	45.2	90.8
C4	SP	RM	28.2	29.5	28.7	32.4	45.2	90.8
C5	DW	IP	49.4	12.8	50.6	17.6	83.4	36.0
C6	DW	XP	49.4	12.8	50.6	17.7	83.4	36.0
C7	DW	RM	33.5	39.3	34.5	45.5	53.9	121.2
M1	DW	GR	27.5	23.9	27.5	23.9	27.5	23.9
M2	RM	GR	12.9	-5.2	12.9	-5.2	12.9	-5.2
P1	IP	DP	43.0	0.0	43.3	1.5	64.0	65.1
P2	IP	XP	43.0	0.0	44.2	0.3	109.8	0.0
W1	RM	RM	10.0	0.0	10.0	0.0	10.0	0.0
W2	RM	GR	13.0	-4.9	13.0	-4.9	13.0	-4.9
W3	RM	AT	-17.7	42.3	-17.7	42.3	-17.7	42.3
S1	RM	RM	10.0	0.0	10.0	0.0	10.0	0.0
S2	RM	AT	-20.0	36.0	-20.0	36.0	-20.0	36.0

Note *1: See Figure 3G.1-20 for the location of sections.

Note *2: DW: Drywell
WW: Wetwell Air Space
SP: Suppression Pool
IP: IC/PCCS Pool
XP: Expansion Pool
RM: RB Room outside Containment
GR: Ground
AT: Air

Note *3: Td: Average Temperature
Tg: Surface Temperature Difference (positive when temperature at Side 1 is higher)

Table 3G.1-7

Pressure Loads Inside RCCV

Event	Drywell pressure in kPaG (psig)	Wetwell pressure in kPaG (psig)	Note
Normal operation	9.0 (1.3)	9.0 (1.3)	
SIT 1	356.8 (51.8)	356.8 (51.8)	Maximum pressure
SIT 2	310 (45)	32.5 (4.75)	Maximum differential pressure
LOCA (6 minutes)	257 (37.3)	241 (35.0)	
LOCA (72 hours)	310 (45)	310 (45)	

Table 3G.1-8

Pressure Loads Inside IC/PCCS Pools

Event	IC/PCCS pool pressure in kPaG (psig)
Normal operation	34.5 (5)
LOCA	48.3 (7)

Table 3G.1-9

Maximum Vertical Acceleration

RB/FB Walls		
Elev. (m)	Node No.	Max. Vertical Acceleration (g)
52.40*	110	1.25
34.00	109	0.83
27.00	108	0.73
22.50	107	0.73
17.50	106	0.73
13.57	105	0.74
9.06	104	0.73
4.65	103	0.78
-1.00	102	0.76
-6.40	101	0.68
-11.50	2	0.63
-15.50	1	0.51
RCCV Wall		
34.00	209	0.90
27.00	208	0.88
17.50	206	0.73
13.57	205	0.78
9.06	204	0.65
4.65	203	0.69
-1.00	202	0.59
-6.40	201	0.59
RPV Pedestal/Vent Wall		
17.50	701	1.10
14.50	702	1.04
11.50	703	0.92
8.50	704	0.77
7.4625	705	0.70
4.65	706, 303	0.67
2.4165	377	0.64
-1.00	302	0.59
-2.753	376	0.51
-6.40	301	0.50

RB/FB Slabs		
Elev. (m)	Node No.	Max. Vertical Acceleration (g)
52.40*	9101	1.20
	9102	1.82
	9103	3.14
	9104	2.26
	9105	2.32
	9106	2.99
	9107	2.80
	9108	2.61
34.00	9091	1.29
	9092	1.06
27.00	9081	1.16
	9082	0.99
	9083	1.09
	9084	1.31
	9085	0.97
22.50	9071	1.60
	9072	1.31
	9073	2.03
	9074	1.31
	9075	1.16
17.50	9061	1.79
	9062	1.49
	9063	0.82
	9064	1.84
	9065	1.42
	99064	1.07
13.57	9051	0.81
	9052	1.46
9.06	9041	0.88
	9042	1.42
4.65	9031	1.17
	9032	0.97
	9033	1.02
	9034	1.51
	9035	1.38
-1.00	9021	1.12
	9022	1.45
	9023	1.01
	9024	0.89
	9025	1.34
	9026	1.57
	9027	0.88
-6.40	9011	0.92
	9012	0.92
	9013	1.35

Note: See Figure 3A.7-4 for the node numbers.

*: The difference between the modeled elevation 52.4 m and the actual elevation 52.7 m at the RB roof is negligibly small.

Table 3G.1-10

Selected Load Combinations for the RCCV

Category	Load Combination											Acceptance Criteria*1
	No.*2	D	L	P_t	P_a	T_a	E'*3	R_a*3	SRV*3	CO*3	Chugging*3	
SIT (maximum pressure)	CV-1	1.0	1.0	1.0								S
LOCA (1.5Pa) 6 minutes	CV-7a	1.0	1.0		1.5	1.0		1.0	1.25	1.5		U
LOCA (1.5Pa) 72 hours	CV-7b	1.0	1.0		1.5	1.0		1.0	1.25		1.5	U
LOCA + SSE 6 minutes	CV-11a	1.0	1.0		1.0	1.0	1.0	1.0	1.0	1.0		U
LOCA + SSE 72 hours	CV-11b	1.0	1.0		1.0	1.0	1.0	1.0	1.0		1.0	U

Note:

*1: S = Allowable Stress as in ASME Section III, Div. 2, Subsection CC-3430 for Service Load Combination.
U = Allowable Stress as in ASME Section III, Div. 2, Subsection CC-3420 for Factored Load Combination.

*2: Based on Table 3.8-2

*3: In load combinations that combine SSE with SRV, Chugging and CO, the loads are combined by SRSS.

Table 3G.1-11

Selected Load Combinations for the RB

Category	Load Combination												Acceptance Criteria*1
	No. *2	D	L	P_a*3	T_o	T_a*3	E'*4	W	R_a*4	SRV*4	CO*4	Chugging*4	
Severe Environmental	RB-4	1.05	1.3		1.3			1.3					U
LOCA (1.5P_a) 6 minutes	RB-8a	1.0	1.0	1.5		1.0			1.0	1.25	1.5		U
LOCA (1.5P_a) 72 hours	RB-8b	1.0	1.0	1.5		1.0			1.0	1.25		1.5	U
LOCA + SSE 6 minutes	RB-9a	1.0	1.0	1.0		1.0	1.0		1.0	1.0	1.0		U
LOCA + SSE 72 hours	RB-9b	1.0	1.0	1.0		1.0	1.0		1.0	1.0		1.0	U

Note:

*1: U = Envelope of "Allowable Stress as in ASME Section III, Div. 2, Subsection CC-3420 for Factored Load Combination" and "Required section strength based on the strength design method per ACI 349-01."

*2: Based on Table 3.8-15

*3: P_a and T_a are accident pressure load within the containment and thermal load generated by LOCA, respectively.
P_a and T_a are indirect loads, but their effects are considered in the RB design.

*4: In load combinations that combine SSE with SRV, Chugging and CO, the loads are combined by SRSS.

Table 3G.1-12

Material Constants for Design Calculations

			Reinforced Concrete		Steel		
		Temperature (°C)	Basemat f'c=4000psi 27.6MPa	Others f'c=5000psi 34.5MPa	Carbon Steel Liner	Stainless Steel Liner	Structural Steel
Young's Modulus (MPa)	**Temperature Loads**	<21	2.49×10^{4}	2.78×10^{4}	2.00×10^{5}		
		93	1.81×10^{4}	2.03×10^{4}			
		204	1.62×10^{4}	1.81×10^{4}			
	Other Loads		2.49×10^{4}	2.78×10^{4}	2.00×10^{1}		2.00×10^{5}
Poisson's Ratio			0.17		0.3		
Thermal Expansion (m/m°C)			9.90×10^{-6}		1.17×10^{-5}	1.52×10^{-5}	1.17×10^{-5}
Weight Density (MN/m^3)			0.0235		0.0770		

Table 3G.1-13

Results of NASTRAN Analysis, Dead Load

Location	Element ID	Nx (MN/m)	Ny (MN/m)	Nxy (MN/m)	Mx (MNm/m)	My (MNm/m)	Mxy (MNm/m)	Qx (MN/m)	Qy (MN/m)
1 RPV	5006	0.065	-5.384	0.162	-0.160	-0.912	0.016	-0.024	-0.281
Pedestal	5013	-0.339	-6.071	0.256	-0.102	-0.561	-0.001	-0.013	-0.078
Bottom	5024	-0.695	-6.038	0.010	-0.060	-0.421	0.002	0.010	-0.021
2 RPV	6006	0.034	-5.281	0.276	0.009	0.015	0.030	0.038	-0.039
Pedestal	6013	-0.027	-5.366	0.399	-0.054	-0.059	0.008	-0.014	0.014
Mid-Height	6024	0.068	-4.009	-0.431	0.014	-0.110	0.012	0.024	0.075
3 RPV	6606	0.045	-3.875	0.723	0.237	1.692	0.149	0.009	-0.762
Pedestal	6613	0.020	-3.931	-0.043	0.173	1.595	-0.179	0.021	-0.733
Top	6624	0.111	-3.789	0.254	0.201	1.578	0.183	-0.028	-0.710
4 RCCV	1806	-0.457	-4.795	0.150	-0.006	-0.136	0.007	0.000	0.017
Wetwell	1813	-0.553	-4.710	0.173	-0.017	-0.060	0.002	0.001	0.058
Bottom	1824	-0.441	-5.244	-0.087	-0.017	-0.102	0.003	-0.004	0.037
5 RCCV	2606	-0.141	-4.293	0.199	0.003	-0.028	0.001	0.002	-0.074
Wetwell	2613	-0.196	-4.314	0.171	-0.026	-0.065	0.002	-0.003	-0.039
Mid-Height	2624	-0.225	-4.723	-0.043	-0.005	-0.023	0.001	0.000	-0.069
6 RCCV	3406	-0.106	-3.634	0.341	0.031	0.244	0.013	0.013	-0.103
Wetwell	3413	-0.014	-4.044	0.130	-0.016	-0.082	-0.071	0.023	0.004
Top	3424	-0.071	-4.073	-0.010	0.005	0.023	-0.008	0.028	0.003
7 RCCV	3606	0.026	-3.246	0.280	-0.010	0.121	0.006	0.020	0.137
Drywell	3613	0.127	-3.629	0.157	0.059	0.325	-0.067	-0.016	0.244
Bottom	3624	-0.040	-4.074	0.043	0.056	0.306	-0.005	0.024	0.136
8 RCCV	4006	0.492	-2.715	0.192	-0.188	-0.472	-0.030	0.015	0.241
Drywell	4013	0.508	-3.707	0.278	-0.040	-0.379	0.008	-0.009	0.151
Mid-Height	4976	0.027	-3.328	0.148	-0.001	-0.179	-0.004	-0.008	0.103
9 RCCV	4406	0.425	-2.172	-0.113	-0.356	-1.783	-0.034	-0.009	0.448
Drywell	4413	-0.354	-3.765	0.154	-0.196	-1.039	0.009	-0.007	0.230
Top	4424	0.057	-2.613	0.113	-0.046	-0.468	0.006	0.002	0.095
10 Basemat	80003	-0.599	-0.812	0.121	4.906	5.322	-0.041	0.282	-0.229
@ Center	80007	-0.624	-0.836	0.111	4.925	5.322	-0.039	-0.040	-0.366
	80012	-0.617	-0.881	0.111	4.917	5.316	-0.037	-0.349	-0.054
11 Basemat	80206	-0.520	-0.688	0.188	1.278	1.871	1.202	1.395	-1.309
Inside	80213	-0.621	-0.864	0.198	2.488	0.272	-0.150	-0.073	-1.961
RPV Pedestal	80224	-0.696	-1.185	0.106	0.346	2.665	-0.226	-1.804	-0.165
12 S/P Slab	83306	0.143	0.603	-0.221	1.344	0.959	-0.041	0.934	-0.028
@ RPV	83313	0.358	0.483	-0.106	1.366	0.963	0.038	0.943	0.030
	83324	0.302	0.633	0.039	1.339	0.942	-0.043	0.932	-0.030
13 S/P Slab	83406	0.169	0.502	-0.205	-0.866	0.328	-0.008	0.324	0.000
@ Center	83413	0.434	0.342	-0.001	-0.856	0.314	0.000	0.329	0.001
	83424	0.352	0.526	-0.003	-0.864	0.306	-0.002	0.325	-0.001
14 S/P Slab	83506	0.190	0.401	-0.199	-0.874	-0.026	-0.011	-0.139	0.003
@ RCCV	83513	0.475	0.294	0.040	-0.893	-0.042	-0.002	-0.130	0.003
	83524	0.384	0.489	-0.004	-0.891	-0.040	-0.002	-0.134	-0.001
15 Topslab	98120	1.118	0.285	0.420	-0.444	-0.265	-0.293	0.052	0.295
@ Drywell Head	98135	2.715	0.205	-0.180	-0.694	0.248	0.119	-0.072	0.343
Opening	98104	0.079	0.722	-0.091	-0.214	-1.352	0.286	0.011	0.269
16 Topslab	98149	1.690	-0.351	0.510	-0.802	-0.380	0.115	-0.047	-0.291
@ Center	98170	1.278	-0.057	0.056	-0.803	-1.031	0.062	0.004	-0.014
	98109	0.111	0.528	-0.025	-0.692	-0.897	0.155	0.095	0.062
17 Topslab	98174	0.790	-0.177	0.205	-0.784	-0.785	-0.198	-0.176	0.064
@ RCCV	98197	0.261	0.020	-0.214	-0.375	1.156	0.148	0.047	0.723
	98103	-0.161	0.380	0.026	1.876	0.298	0.211	0.932	0.112

Table 3G.1-13

Results of NASTRAN Analysis, Dead Load (Continued)

Location	Element ID	Nx (MN/m)	Ny (MN/m)	Nxy (MN/m)	Mx (MNm/m)	My (MNm/m)	Mxy (MNm/m)	Qx (MN/m)	Qy (MN/m)
18 Wall	6	0.098	-7.190	0.535	-0.213	-1.578	0.012	-0.040	-0.489
Below RCCV	13	0.236	-5.600	0.423	-0.508	-2.681	0.003	-0.006	-0.803
Bottom	24	0.192	-6.143	-0.210	-0.541	-2.864	0.005	0.000	-0.842
19 Wall	806	-0.043	-6.071	0.154	0.023	-0.035	-0.020	0.010	-0.114
Below RCCV	813	-0.215	-5.479	0.358	-0.027	-0.048	-0.010	-0.013	-0.188
Mid-Height	824	-0.156	-6.049	-0.196	-0.031	-0.007	-0.006	0.001	-0.205
20 Wall	1606	-0.601	-5.326	0.084	0.105	0.505	0.004	-0.004	-0.212
Below RCCV	1613	-0.707	-5.191	0.243	0.097	0.600	0.003	0.000	-0.254
Top	1624	-0.592	-5.731	-0.141	0.095	0.563	0.001	-0.006	-0.230
21 Exterior Wall	20011	-0.674	-3.865	-0.514	0.058	0.416	0.012	0.055	0.178
@ EL-11.50	20023	-0.005	-1.414	-0.529	0.072	-0.327	-0.004	-0.138	-0.188
~-10.50m	30010	-0.161	-2.230	0.064	-0.332	-1.808	0.013	0.001	0.430
	30020	-0.043	-1.267	-0.257	0.183	-0.649	-0.058	0.155	0.221
	40001	-0.040	-1.298	0.230	0.184	-0.648	0.060	-0.152	0.211
	40011	-0.324	-2.652	-0.012	-0.376	-2.024	-0.009	-0.001	0.488
22 Exterior Wall	22011	0.218	-3.114	0.655	-0.012	0.059	0.009	-0.017	0.055
@ EL-4.65	22023	0.019	-1.546	-0.468	-0.160	-0.010	-0.019	0.101	0.012
~-6.60m	32010	-0.004	-1.822	0.063	0.001	0.039	0.001	0.000	-0.019
	32020	-0.046	-2.037	-0.066	-0.059	-0.002	-0.005	-0.054	-0.008
	42001	-0.058	-2.113	-0.061	-0.076	-0.004	0.002	0.039	-0.002
	42011	-0.312	-2.274	-0.113	-0.002	0.031	-0.003	0.002	-0.012
23 Exterior Wall	24211	-0.196	-1.751	0.072	-0.066	-0.439	0.004	-0.005	-0.026
@ EL22.50	24224	-0.034	-1.039	0.295	0.030	-0.043	-0.043	-0.064	-0.035
~24.60m	34210	-0.004	-0.761	0.089	0.001	-0.033	0.002	0.003	0.001
	34220	0.048	-0.921	-0.154	0.052	-0.026	-0.009	0.041	0.002
	44201	0.025	-1.084	-0.328	0.043	-0.013	0.015	-0.047	-0.002
24 Basemat	90140	0.240	-0.800	-0.158	-1.389	-1.121	2.521	-1.759	2.017
@ Wall	90182	-0.258	-0.327	-0.067	0.663	-1.041	-0.319	0.232	0.644
Below RCCV	90111	-0.386	-0.561	0.033	-0.920	0.832	-0.397	0.691	0.138
25 Slab	93140	-0.159	0.140	0.087	0.077	0.097	-0.067	0.120	-0.097
EL4.65m	93182	0.144	0.091	0.000	0.028	0.112	0.008	-0.008	-0.149
@ RCCV	93111	0.054	0.172	-0.030	0.131	0.028	0.005	-0.140	-0.004
26 Slab	96144	-0.093	0.147	0.184	0.047	0.063	-0.045	0.104	-0.081
EL17.5m	96186	0.284	-0.071	-0.021	-0.002	-0.003	-0.002	-0.003	-0.036
@ RCCV	96113	-0.065	0.538	-0.051	-0.175	0.016	0.000	0.197	0.027
27 Slab	98472	0.379	0.078	0.055	0.161	0.242	-0.194	0.224	-0.249
EL27.0m	98514	0.024	0.146	0.045	0.030	0.087	0.023	-0.003	-0.159
@ RCCV	98424	-0.106	0.471	-0.024	1.889	0.465	0.010	-1.200	-0.095
28 Pool Girder	123054	0.442	-2.495	-0.794	0.051	0.033	0.054	-0.011	-0.028
@ Storage Pool	123154	1.385	-0.504	-0.624	0.082	0.031	0.099	0.018	0.008
29 Pool Girder	123062	0.475	0.604	0.303	-0.024	-0.166	0.029	0.000	-0.090
@ Cavity	123162	-1.397	0.167	0.178	-0.075	-0.057	0.024	0.089	0.039
30 Pool Girder	123067	0.488	-2.414	1.407	0.012	-0.050	-0.076	-0.120	-0.062
@ Fuel Pool	123167	0.520	-0.608	1.216	0.039	0.027	0.015	-0.031	0.009
31 MS Tunnel	150122	-0.026	0.046	0.280	0.022	0.045	0.016	-0.010	-0.043
Wall and Slab	96611	-0.011	0.297	-0.014	0.062	-0.080	-0.052	-0.073	0.017
	98614	-0.022	-0.175	-0.020	0.009	-0.515	-0.062	-0.050	0.030

Table 3G.1-14

Results of NASTRAN Analysis, Drywell Unit Pressure (1 MPa)

Location	Element ID	Nx (MN/m)	Ny (MN/m)	Nxy (MN/m)	Mx (MNm/m)	My (MNm/m)	Mxy (MNm/m)	Qx (MN/m)	Qy (MN/m)
1 RPV	5006	-3.691	-4.672	-0.082	1.293	7.769	0.037	-0.011	3.421
Pedestal	5013	-3.770	-4.277	-0.247	1.264	7.674	-0.004	-0.002	3.458
Bottom	5024	-3.625	-3.457	0.045	1.335	7.194	-0.035	0.029	3.109
2 RPV	6006	4.551	-4.404	-0.467	-0.166	-0.605	-0.012	0.044	-0.493
Pedestal	6013	4.467	-4.273	-0.254	-0.166	-0.652	-0.012	0.020	-0.489
Mid-Height	6024	5.180	-2.748	-0.354	0.183	-0.345	-0.003	-0.054	-0.211
3 RPV	6606	2.350	-4.275	0.036	-0.252	-1.748	-0.293	0.218	1.030
Pedestal	6613	1.826	-4.806	-0.358	-0.255	-1.238	0.271	-0.171	0.803
Top	6624	2.250	-4.596	0.028	-0.261	-1.874	-0.239	0.162	1.078
4 RCCV	1806	0.548	3.676	-0.563	0.281	1.664	0.002	-0.001	0.216
Wetwell	1813	0.515	2.795	-0.039	0.275	1.709	-0.001	-0.002	0.288
Bottom	1824	0.628	4.316	0.023	0.279	1.488	-0.007	0.003	0.213
5 RCCV	2606	1.528	3.661	-0.616	0.015	0.513	0.036	-0.001	0.191
Wetwell	2613	1.262	2.467	-0.012	0.038	0.404	-0.005	-0.001	0.201
Mid-Height	2624	1.510	4.226	-0.032	0.144	0.326	-0.005	0.003	0.115
6 RCCV	3406	4.379	3.739	-0.076	-1.035	-5.767	1.331	-1.003	1.977
Wetwell	3413	3.268	2.059	-0.415	-0.713	-4.144	-1.211	0.767	1.514
Top	3424	2.984	4.114	0.796	-0.666	-4.226	1.473	-0.897	1.497
7 RCCV	3606	4.452	7.434	-0.030	0.159	1.050	1.441	-0.405	1.617
Drywell	3613	3.451	5.759	-0.371	0.362	2.279	-1.270	0.152	2.109
Bottom	3624	3.474	9.462	0.715	0.559	2.851	1.534	-0.152	1.903
8 RCCV	4006	1.106	7.714	0.011	0.168	1.110	0.190	0.265	-1.516
Drywell	4013	1.576	5.589	0.372	-0.188	0.078	0.072	-0.031	-0.846
Mid-Height	4976	2.955	8.502	-0.503	0.112	0.458	0.002	-0.004	-1.048
9 RCCV	4406	-0.543	7.824	0.931	1.550	10.450	-0.001	0.047	-2.610
Drywell	4413	0.388	5.173	0.469	1.175	8.382	0.132	0.071	-2.781
Top	4424	2.734	7.187	-0.454	1.209	7.164	0.053	0.007	-2.128
10 Basemat	80003	2.658	2.969	-0.031	-17.349	-16.643	0.022	-0.451	0.335
@ Center	80007	2.689	2.987	-0.021	-17.339	-16.635	0.026	0.064	0.548
	80012	2.676	3.011	-0.016	-17.355	-16.629	0.025	0.541	0.074
11 Basemat	80206	2.759	2.810	0.000	-12.124	-12.134	-1.543	-1.227	0.879
Inside	80213	2.813	3.035	-0.113	-13.891	-10.392	0.075	-0.011	1.558
RPV Pedestal	80224	2.812	2.786	-0.038	-10.823	-13.368	0.135	1.711	0.047
12 S/P Slab	83306	-1.210	0.977	-0.125	-3.755	-2.157	-0.051	-1.320	0.019
@ RPV	83313	-1.410	0.822	-0.015	-3.752	-2.180	0.027	-1.331	-0.001
	83324	-1.148	0.999	-0.001	-3.808	-2.215	0.002	-1.357	-0.004
13 S/P Slab	83406	-0.659	0.353	-0.049	0.528	-1.319	-0.039	-0.919	-0.001
@ Center	83413	-0.707	0.337	-0.049	0.526	-1.337	0.011	-0.914	-0.002
	83424	-0.653	0.347	0.034	0.514	-1.313	0.006	-0.933	0.000
14 S/P Slab	83506	-0.458	0.124	-0.004	3.051	-0.101	-0.011	-0.699	-0.013
@ RCCV	83513	-0.452	0.198	-0.053	3.034	-0.117	0.004	-0.699	0.000
	83524	-0.522	0.088	0.034	3.076	-0.066	0.003	-0.714	0.000
15 Topslab	98120	-3.452	1.222	1.605	3.875	2.801	1.933	1.004	-3.079
@ Drywell Head	98135	-10.633	-1.883	-0.732	4.188	-1.235	0.129	0.675	-4.326
Opening	98104	-1.043	3.880	-1.766	2.886	11.261	-1.649	-1.380	-2.727
16 Topslab	98149	-5.613	4.258	-2.831	3.307	1.492	0.397	0.329	1.923
@ Center	98170	-4.344	2.379	-1.379	4.089	4.860	-0.242	-0.150	-0.277
	98109	0.322	2.196	-0.395	4.795	7.947	-1.043	-0.386	-0.920
17 Topslab	98174	-0.932	2.983	-1.066	2.722	3.386	1.750	1.000	-0.643
@ RCCV	98197	-0.272	3.130	-0.120	0.773	-7.524	-0.704	-0.301	-5.156
	98103	1.995	3.160	-0.433	-7.752	0.454	-1.513	-5.100	-0.911

Table 3G.1-14

Results of NASTRAN Analysis, Drywell Unit Pressure (1 MPa) (Continued)

Location	Element ID	Nx (MN/m)	Ny (MN/m)	Nxy (MN/m)	Mx (MNm/m)	My (MNm/m)	Mxy (MNm/m)	Qx (MN/m)	Qy (MN/m)
18 Wall	6	-0.810	3.022	-0.522	0.541	3.152	-0.010	0.024	1.051
Below RCCV	13	-0.629	2.747	-0.123	0.574	3.274	-0.001	-0.001	1.019
Bottom	24	-0.982	3.181	0.076	0.606	3.445	-0.005	0.004	1.075
19 Wall	806	0.124	3.121	-0.449	-0.007	0.032	0.012	-0.010	0.100
Below RCCV	813	0.192	2.523	-0.104	-0.004	0.033	0.006	0.024	0.196
Mid-Height	824	0.054	3.361	0.101	0.024	-0.025	0.004	-0.001	0.181
20 Wall	1606	0.822	3.044	-0.486	-0.313	-1.810	0.001	0.000	0.509
Below RCCV	1613	0.798	2.208	-0.073	-0.319	-1.796	-0.004	-0.001	0.541
Top	1624	0.875	3.604	0.068	-0.317	-1.988	-0.003	0.003	0.589
21 Exterior Wall	20011	0.080	0.612	0.041	0.209	0.755	0.015	-0.015	0.226
@ EL-11.50	20023	0.012	-0.081	-0.105	-0.056	0.036	-0.002	0.001	0.020
~-10.50m	30010	0.294	-0.111	-0.038	0.287	1.392	-0.013	-0.002	-0.295
	30020	0.099	-0.301	-0.045	-0.096	0.024	0.029	0.034	0.001
	40001	0.051	-0.249	0.183	-0.088	0.099	-0.016	-0.008	-0.016
	40011	-0.156	0.064	-0.027	0.317	1.533	0.012	0.000	-0.331
22 Exterior Wall	22011	0.056	0.679	-0.102	0.009	0.005	0.005	0.004	-0.136
@ EL-4.65	22023	-0.005	-0.244	-0.102	-0.001	0.025	-0.005	0.015	-0.006
~-6.60m	32010	0.212	0.106	0.004	0.011	0.091	0.002	0.000	0.044
	32020	0.015	-0.458	0.370	0.016	0.035	-0.007	-0.003	0.025
	42001	-0.013	-0.383	0.407	0.016	0.029	-0.009	-0.001	0.000
	42011	0.032	0.867	-0.057	0.019	0.011	0.008	-0.004	0.081
23 Exterior Wall	24211	1.007	0.488	-0.092	0.171	0.963	0.030	0.029	-0.602
@ EL22.50	24224	0.033	-1.268	-0.343	0.005	0.168	0.061	0.106	0.114
~24.60m	34210	1.013	0.105	0.023	-0.041	0.132	0.017	-0.008	0.073
	34220	0.092	-1.195	0.477	0.033	0.112	0.006	0.031	-0.003
	44201	0.032	-0.901	0.667	0.068	0.082	-0.024	-0.016	-0.013
24 Basemat	90140	-0.181	0.400	0.822	2.960	2.403	-3.390	0.332	-0.650
@ Wall	90182	1.649	0.073	-0.087	-0.866	4.383	0.450	-0.077	-0.584
Below RCCV	90111	0.119	0.767	-0.104	4.456	-0.712	0.507	-0.645	-0.067
25 Slab	93140	-0.061	0.042	0.046	0.082	0.056	-0.060	0.013	-0.016
EL4.65m	93182	0.103	-0.078	0.016	-0.007	0.075	0.005	0.000	0.015
@ RCCV	93111	-0.079	0.009	0.010	0.131	0.006	0.003	-0.034	-0.002
26 Slab	96144	0.383	0.384	1.127	0.207	0.284	-0.200	0.044	-0.091
EL17.5m	96186	1.099	-0.517	0.124	0.029	0.359	-0.058	0.015	-0.145
@ RCCV	96113	-0.716	1.172	0.322	2.194	0.203	-0.348	-0.906	-0.093
27 Slab	98472	0.041	0.850	-0.664	-0.321	-0.461	0.490	-0.236	0.261
EL27.0m	98514	0.183	-0.018	-0.074	-0.111	-0.818	-0.061	0.020	0.223
@ RCCV	98424	-0.587	2.267	-0.148	-5.020	-0.772	-0.387	1.654	0.132
28 Pool Girder	123054	-0.661	7.983	5.595	0.039	-0.020	-0.476	-0.085	-0.113
@ Storage Pool	123154	-3.074	1.077	4.886	-0.015	0.046	-0.630	-0.231	0.056
29 Pool Girder	123062	-0.850	-4.835	-4.220	-0.022	0.824	-0.044	0.166	0.459
@ Cavity	123162	8.269	-1.757	-3.007	0.232	0.224	-0.096	-0.265	-0.146
30 Pool Girder	123067	-1.022	8.851	-6.945	-0.081	0.005	0.332	0.318	-0.070
@ Fuel Pool	123167	-2.374	1.864	-6.332	-0.053	-0.077	0.006	0.070	0.047
31 MS Tunnel	150122	0.130	-0.696	0.208	-0.004	0.081	-0.012	0.009	-0.069
Wall and Slab	96611	-0.036	0.673	-0.029	-0.062	-0.110	-0.020	0.021	0.008
	98614	0.010	-0.274	0.006	-0.483	-1.082	-0.164	0.146	0.052

Table 3G.1-15

Results of NASTRAN Analysis, Wetwell Unit Pressure (1 MPa)

Location	Element ID	Nx (MN/m)	Ny (MN/m)	Nxy (MN/m)	Mx (MNm/m)	My (MNm/m)	Mxy (MNm/m)	Qx (MN/m)	Qy (MN/m)
1 RPV	5006	-0.608	-1.082	0.028	0.141	0.842	0.002	0.002	0.391
Pedestal	5013	-0.617	-0.943	0.105	0.139	0.834	0.000	-0.001	0.398
Bottom	5024	-0.646	-0.792	0.023	0.150	0.865	-0.006	0.003	0.413
2 RPV	6006	-0.383	-1.217	0.050	-0.018	-0.160	0.005	0.005	-0.061
Pedestal	6013	-0.438	-0.971	0.107	-0.024	-0.151	0.003	-0.013	-0.068
Mid-Height	6024	-0.505	-0.482	-0.010	-0.063	-0.149	-0.004	0.006	-0.038
3 RPV	6606	0.238	-1.879	0.127	0.728	4.751	0.094	0.206	-1.285
Pedestal	6613	0.381	-1.609	0.122	0.681	4.526	-0.104	-0.184	-1.198
Top	6624	0.312	-1.185	-0.018	0.734	4.721	0.086	0.176	-1.277
4 RCCV	1806	2.194	4.384	0.004	0.857	5.150	0.000	0.002	1.949
Wetwell	1813	2.120	4.040	-0.025	0.850	5.150	-0.006	-0.003	1.978
Bottom	1824	2.362	3.999	0.029	0.824	5.092	0.013	0.000	1.973
5 RCCV	2606	6.309	4.449	-0.072	-0.457	-2.275	-0.020	0.012	-0.091
Wetwell	2613	5.859	3.894	-0.017	-0.474	-2.067	-0.002	-0.011	-0.061
Mid-Height	2624	6.107	3.815	-0.012	-0.445	-2.084	-0.006	0.005	-0.186
6 RCCV	3406	2.774	4.473	-0.470	0.796	4.661	-1.229	0.929	-1.771
Wetwell	3413	2.772	3.974	0.483	0.473	3.728	1.171	-0.714	-1.508
Top	3424	2.834	4.000	-0.754	0.795	4.958	-1.376	0.827	-1.853
7 RCCV	3606	2.182	0.922	-0.605	-0.216	-1.304	-1.244	0.372	-0.657
Drywell	3613	2.237	0.430	0.665	-0.555	-2.305	1.256	-0.117	-0.877
Bottom	3624	2.320	-0.311	-0.867	-0.496	-2.553	-1.437	0.134	-0.801
8 RCCV	4006	2.016	0.427	-0.178	0.115	-0.582	-0.035	-0.224	0.019
Drywell	4013	1.579	0.025	-0.032	-0.070	-0.172	-0.062	0.029	-0.367
Mid-Height	4976	1.561	-0.253	0.000	-0.037	-0.041	0.006	-0.008	-0.368
9 RCCV	4406	0.928	-0.133	-0.105	0.412	0.242	0.108	0.004	-0.508
Drywell	4413	0.229	-0.215	-0.110	0.147	0.684	-0.026	-0.035	-0.137
Top	4424	0.485	-0.194	0.017	0.136	0.794	-0.005	-0.011	-0.210
10 Basemat	80003	0.408	0.436	-0.001	-2.029	-1.955	0.012	0.032	-0.004
@ Center	80007	0.411	0.432	-0.003	-2.005	-1.950	0.016	0.025	-0.008
	80012	0.409	0.426	-0.002	-1.993	-1.949	0.013	0.015	0.000
11 Basemat	80206	0.435	0.436	0.020	-2.210	-2.062	0.075	0.082	-0.041
Inside	80213	0.431	0.443	-0.001	-2.025	-2.105	0.102	0.079	-0.056
RPV Pedestal	80224	0.429	0.367	-0.011	-1.958	-2.001	0.003	0.007	-0.012
12 S/P Slab	83306	1.804	1.743	-0.093	-0.725	1.218	-0.004	4.169	-0.060
@ RPV	83313	1.989	1.716	0.091	-0.648	1.243	-0.017	4.194	0.064
	83324	1.727	1.771	-0.024	-0.666	1.259	-0.001	4.192	-0.057
13 S/P Slab	83406	1.883	1.764	-0.040	-6.216	-1.484	-0.011	-0.326	0.000
@ Center	83413	2.058	1.708	0.041	-6.190	-1.474	-0.013	-0.318	0.001
	83424	1.865	1.847	-0.004	-6.201	-1.466	0.002	-0.316	0.001
14 S/P Slab	83506	1.884	1.742	-0.017	2.774	-0.378	-0.008	-3.774	-0.003
@ RCCV	83513	2.059	1.735	0.037	2.786	-0.377	-0.002	-3.771	-0.002
	83524	1.940	1.900	-0.020	2.768	-0.371	-0.001	-3.769	0.003
15 Topslab	98120	0.433	0.566	0.335	-0.010	-0.030	-0.006	-0.002	-0.015
@ Drywell Head	98135	0.814	0.168	-0.194	-0.050	-0.007	0.008	-0.002	-0.001
Opening	98104	0.173	1.083	-0.195	-0.002	-0.026	0.001	-0.001	0.004
16 Topslab	98149	0.519	0.727	-0.005	-0.055	-0.071	0.031	0.018	-0.067
@ Center	98170	0.696	0.264	0.045	-0.083	-0.134	-0.017	-0.010	-0.028
	98109	0.378	0.734	-0.003	-0.054	-0.048	-0.004	-0.020	0.003
17 Topslab	98174	0.548	0.835	0.102	-0.283	-0.383	0.159	0.073	-0.092
@ RCCV	98197	0.319	0.266	-0.022	-0.201	-0.223	-0.052	-0.033	-0.011
	98103	0.340	0.582	0.039	-0.219	-0.063	-0.001	-0.024	-0.003

Table 3G.1-15

Results of NASTRAN Analysis, Wetwell Unit Pressure (1 MPa) (Continued)

Location	Element ID	Nx (MN/m)	Ny (MN/m)	Nxy (MN/m)	Mx (MNm/m)	My (MNm/m)	Mxy (MNm/m)	Qx (MN/m)	Qy (MN/m)
18 Wall	6	-0.242	0.189	-0.086	0.105	0.634	-0.004	0.007	0.193
Below RCCV	13	-0.221	-0.024	-0.050	0.131	0.728	0.000	0.000	0.218
Bottom	24	-0.279	-0.069	0.036	0.135	0.761	-0.001	0.001	0.230
19 Wall	806	0.151	0.148	0.020	0.041	0.234	0.012	0.001	-0.019
Below RCCV	813	0.194	-0.064	-0.019	0.066	0.253	0.004	0.004	0.015
Mid-Height	824	0.168	-0.093	0.037	0.047	0.251	0.000	-0.001	0.024
20 Wall	1606	1.582	0.093	0.009	-0.454	-2.619	0.000	0.002	0.845
Below RCCV	1613	1.552	-0.184	-0.020	-0.468	-2.683	-0.005	-0.002	0.910
Top	1624	1.745	-0.225	0.024	-0.492	-2.729	0.008	-0.001	0.940
21 Exterior Wall	20011	0.133	0.521	0.020	0.083	0.315	0.007	-0.020	0.103
@ EL-11.50	20023	0.002	-0.002	-0.017	-0.025	0.039	0.000	0.014	0.019
~-10.50m	30010	0.183	0.305	0.001	0.100	0.533	-0.003	-0.002	-0.112
	30020	0.026	-0.145	-0.023	-0.045	0.042	0.013	0.003	-0.008
	40001	0.016	-0.132	0.058	-0.045	0.059	-0.009	0.002	-0.013
	40011	0.124	0.354	0.022	0.108	0.582	0.003	0.002	-0.125
22 Exterior Wall	22011	0.988	0.289	-0.103	-0.002	0.134	0.004	-0.015	0.308
@ EL-4.65	22023	0.115	0.345	0.199	0.296	0.060	-0.058	-0.101	-0.013
~-6.60m	32010	1.121	0.165	-0.061	-0.014	0.105	0.016	-0.001	-0.304
	32020	0.106	0.608	0.254	0.219	0.042	-0.106	0.154	0.013
	42001	0.146	0.653	-0.054	0.288	0.041	0.041	-0.106	0.021
	42011	1.033	0.244	0.147	-0.054	0.070	-0.025	0.003	-0.295
23 Exterior Wall	24211	0.420	0.462	0.004	0.033	0.220	-0.002	-0.005	-0.016
@ EL22.50	24224	0.020	0.304	-0.156	-0.040	-0.051	0.014	0.000	-0.065
~24.60m	34210	0.476	0.175	0.002	0.014	0.165	-0.019	0.002	0.032
	34220	-0.020	0.130	0.004	-0.014	0.029	0.017	-0.029	-0.015
	44201	-0.014	0.151	0.117	-0.008	0.021	-0.012	0.030	-0.009
24 Basemat	90140	0.066	0.126	0.143	0.061	0.036	-0.432	-0.083	0.008
@ Wall	90182	0.335	0.102	0.010	-0.304	0.000	0.061	-0.005	0.272
Below RCCV	90111	0.101	0.245	-0.016	-0.086	-0.321	0.074	0.319	0.006
25 Slab	93140	0.301	0.395	0.345	0.058	0.044	-0.052	0.002	-0.003
EL4.65m	93182	0.688	0.229	-0.053	-0.007	0.087	0.005	0.002	0.067
@ RCCV	93111	0.237	0.673	-0.131	0.061	-0.014	-0.001	0.060	-0.001
26 Slab	96144	-0.062	0.902	0.406	0.038	-0.087	0.044	0.008	0.024
EL17.5m	96186	0.854	-0.302	-0.427	0.019	-0.019	0.075	-0.023	-0.107
@ RCCV	96113	-0.512	1.384	-0.705	-0.863	-0.011	0.377	0.042	0.027
27 Slab	98472	-0.088	0.036	0.303	0.102	0.132	-0.078	0.081	-0.072
EL27.0m	98514	0.092	0.106	0.001	0.028	0.187	0.006	0.000	-0.124
@ RCCV	98424	0.110	0.452	0.010	0.444	0.071	0.025	-0.188	-0.014
28 Pool Girder	123054	0.169	0.021	-0.046	0.000	-0.013	0.003	0.016	-0.016
@ Storage Pool	123154	0.061	0.018	-0.051	0.005	0.007	0.000	0.006	0.001
29 Pool Girder	123062	0.273	0.031	0.062	-0.012	-0.007	0.001	0.018	0.002
@ Cavity	123162	0.169	0.027	0.070	-0.004	0.000	-0.004	0.007	-0.004
30 Pool Girder	123067	0.123	-0.619	-0.017	-0.030	-0.050	-0.024	-0.026	-0.050
@ Fuel Pool	123167	0.275	-0.169	-0.055	0.006	0.008	-0.001	-0.013	0.000
31 MS Tunnel	150122	0.012	-0.082	-0.008	-0.007	0.018	0.006	0.001	-0.004
Wall and Slab	96611	-0.069	0.450	-0.054	0.004	-0.027	0.005	0.001	0.000
	98614	0.009	-0.135	0.006	-0.049	-0.086	-0.019	0.013	0.005

Table 3G.1-16

Results of NASTRAN Analysis, Thermal Load (Normal Operation: Winter)

Location	Element ID	Nx (MN/m)	Ny (MN/m)	Nxy (MN/m)	Mx (MNm/m)	My (MNm/m)	Mxy (MNm/m)	Qx (MN/m)	Qy (MN/m)
1 RPV	5006	-3.414	-0.437	-0.228	-5.952	-6.232	-0.029	0.060	0.693
Pedestal	5013	-3.146	-0.241	-0.176	-6.047	-6.552	-0.004	0.031	0.609
Bottom	5024	-3.281	-0.093	-0.019	-6.099	-6.210	-0.018	-0.023	0.615
2 RPV	6006	-1.875	-0.191	0.024	-5.727	-5.302	0.158	0.038	-0.715
Pedestal	6013	-1.957	-0.333	-0.227	-5.832	-5.203	-0.029	-0.014	-0.829
Mid-Height	6024	-2.018	-0.147	-0.008	-6.491	-3.983	-0.231	0.008	-0.730
3 RPV	6606	-0.858	-0.117	0.191	-5.574	-3.404	0.002	-0.384	-1.766
Pedestal	6613	-0.634	-0.136	-0.213	-5.548	-3.423	0.039	0.446	-1.793
Top	6624	-0.505	-0.240	0.051	-5.515	-3.228	0.021	-0.592	-1.763
4 RCCV	1806	-2.364	-1.092	-0.393	-3.686	-5.547	0.063	0.068	-0.442
Wetwell	1813	-2.821	-3.328	-0.369	-3.574	-5.568	-0.014	-0.006	-0.440
Bottom	1824	-2.275	-3.899	-0.016	-3.677	-5.571	0.012	-0.055	-0.438
5 RCCV	2606	-2.866	-1.303	-0.392	-3.019	-2.343	-0.006	0.052	-0.092
Wetwell	2613	-4.048	-4.123	-0.086	-2.641	-1.955	0.004	-0.051	0.067
Mid-Height	2624	-3.423	-4.642	-0.097	-2.943	-2.007	-0.020	0.049	0.035
6 RCCV	3406	0.492	-1.701	0.000	-3.082	-3.562	-0.094	0.191	0.555
Wetwell	3413	-1.540	-5.098	0.249	-2.834	-3.203	0.001	0.007	0.537
Top	3424	0.135	-5.952	0.243	-2.665	-1.585	-0.007	0.000	0.021
7 RCCV	3606	-2.410	-1.874	-0.297	-4.072	-4.078	0.067	0.185	0.021
Drywell	3613	-1.820	-5.897	0.873	-2.990	-2.673	-0.069	-0.021	0.188
Bottom	3624	-13.505	-7.187	0.027	0.195	1.095	0.041	0.025	1.816
8 RCCV	4006	0.447	-1.590	0.301	-4.004	-3.956	0.072	0.027	-0.043
Drywell	4013	0.903	-6.938	0.768	-3.142	-2.965	0.023	-0.090	0.112
Mid-Height	4976	-8.133	-6.545	0.419	-0.449	-1.750	0.005	0.009	-0.181
9 RCCV	4406	4.600	-0.749	0.402	-4.043	-4.593	0.240	0.298	0.471
Drywell	4413	0.766	-7.522	-0.121	-3.419	-4.182	0.246	-0.067	0.633
Top	4424	-8.592	-5.731	0.628	0.047	0.691	-0.018	-0.019	-1.557
10 Basemat	80003	-4.765	-5.524	0.028	-7.912	-7.859	-0.046	0.022	-0.007
@ Center	80007	-4.791	-5.484	0.065	-7.884	-7.854	-0.043	0.019	-0.008
	80012	-4.795	-5.414	0.049	-7.873	-7.859	-0.039	0.014	0.000
11 Basemat	80206	-4.774	-5.871	0.133	-8.328	-8.170	-0.037	0.012	-0.033
Inside	80213	-4.985	-5.528	0.163	-8.093	-8.299	-0.201	-0.065	-0.074
RPV Pedestal	80224	-4.885	-5.287	0.089	-8.086	-7.944	-0.042	-0.046	0.008
12 S/P Slab	83306	-5.525	-1.106	-0.056	-2.905	-2.636	0.001	0.174	-0.008
@ RPV	83313	-5.868	-0.744	0.011	-2.878	-2.650	-0.020	0.210	0.008
	83324	-5.754	-0.559	0.371	-2.799	-2.576	-0.007	0.259	0.008
13 S/P Slab	83406	-4.135	-2.452	-0.298	-3.149	-2.794	-0.008	0.095	0.006
@ Center	83413	-4.776	-1.972	0.275	-3.253	-2.844	-0.009	0.146	-0.001
	83424	-4.435	-1.799	0.040	-3.257	-2.800	-0.001	0.166	-0.001
14 S/P Slab	83506	-3.428	-2.905	-0.271	-3.337	-2.977	-0.028	0.042	0.008
@ RCCV	83513	-4.174	-2.746	0.323	-3.676	-3.030	-0.006	0.144	0.002
	83524	-3.662	-2.334	-0.010	-3.675	-3.022	0.013	0.132	-0.005
15 Topslab	98120	-8.250	-6.148	-4.390	1.179	1.118	1.034	0.015	0.125
@ Drywell Head	98135	-12.847	-3.720	2.344	2.076	0.076	-0.350	0.159	-0.065
Opening	98104	-3.426	-7.468	2.585	0.228	2.116	-0.471	0.061	-0.121
16 Topslab	98149	-8.128	-5.389	-1.915	1.754	1.864	0.380	0.073	0.276
@ Center	98170	-8.549	-5.044	-0.673	1.759	2.872	-0.007	0.032	0.317
	98109	-7.315	-4.905	1.127	1.235	1.959	0.002	0.227	-0.049
17 Topslab	98174	-6.914	-5.095	-0.760	2.420	3.569	0.007	-0.253	0.688
@ RCCV	98197	-10.272	-4.984	-0.945	1.536	2.498	0.194	0.164	-0.574
	98103	-8.143	-5.630	-0.071	3.116	2.695	0.101	0.446	0.082

Table 3G.1-16

Results of NASTRAN Analysis, Thermal Load (Normal Operation: Winter) (Continued)

Location	Element ID	Nx (MN/m)	Ny (MN/m)	Nxy (MN/m)	Mx (MNm/m)	My (MNm/m)	Mxy (MNm/m)	Qx (MN/m)	Qy (MN/m)
18 Wall	6	1.253	-0.205	-0.568	0.076	0.906	-0.033	0.012	0.034
Below RCCV	13	0.384	-2.513	-0.655	0.359	2.031	-0.003	0.018	0.443
Bottom	24	0.608	-2.607	0.109	0.369	2.061	-0.004	-0.001	0.459
19 Wall	806	1.106	-0.949	0.087	0.125	0.770	0.068	-0.045	0.040
Below RCCV	813	0.616	-2.464	-0.504	0.086	0.776	-0.022	0.007	0.463
Mid-Height	824	0.476	-2.699	0.077	0.100	0.784	0.014	0.008	0.416
20 Wall	1606	6.930	-1.551	0.139	-0.385	-1.749	0.078	0.068	1.318
Below RCCV	1613	6.711	-2.791	-0.408	-0.489	-2.841	-0.003	-0.010	1.707
Top	1624	7.196	-3.509	-0.106	-0.548	-2.794	-0.004	-0.051	1.745
21 Exterior Wall	20011	2.857	2.770	0.707	0.218	0.937	0.029	-0.143	0.275
@ EL-11.50	20023	-1.456	-1.248	1.649	1.953	3.881	0.188	0.289	0.632
~-10.50m	30010	0.135	2.273	-0.121	1.014	3.199	-0.017	-0.023	-0.559
	30020	-0.118	-1.019	-0.219	0.131	1.084	0.109	-0.030	-0.275
	40001	-0.158	-0.676	-0.073	0.169	1.184	-0.072	0.112	-0.307
	40011	0.784	2.397	0.042	1.004	3.271	0.007	0.011	-0.589
22 Exterior Wall	22011	1.989	2.366	-0.092	-0.078	-0.066	0.029	0.015	0.113
@ EL-4.65	22023	1.813	-4.077	-2.023	-0.288	0.359	-0.041	0.709	0.422
~-6.60m	32010	12.350	5.928	0.012	-2.697	-2.528	-0.002	-0.002	-0.174
	32020	0.311	4.027	2.287	-0.573	-1.830	-0.392	0.720	0.111
	42001	2.250	2.855	2.390	-0.736	-1.651	-0.048	-0.662	-0.269
	42011	10.751	3.992	0.063	-2.795	-2.458	0.078	0.067	-0.089
23 Exterior Wall	24211	2.843	1.959	-0.374	-0.012	0.038	0.010	-0.116	1.643
@ EL22.50	24224	0.119	3.714	-3.310	0.641	-0.241	-0.550	-0.622	-0.226
~24.60m	34210	13.386	4.447	-0.429	-2.795	-2.685	0.027	-0.009	-0.153
	34220	1.581	3.765	2.292	0.666	-1.618	-0.429	1.495	0.117
	44201	0.865	4.461	-0.102	0.302	-1.803	0.423	-1.817	0.106
24 Basemat	90140	1.036	1.410	1.316	1.084	0.020	-1.021	-0.512	-0.135
@ Wall	90182	1.427	0.428	0.598	-0.072	-3.082	0.173	-0.153	2.372
Below RCCV	90111	0.529	2.358	-0.001	-3.379	-0.412	0.034	2.474	0.116
25 Slab	93140	-0.743	1.592	2.634	-0.402	-0.313	0.220	-0.105	0.085
EL4.65m	93182	2.346	-2.693	-0.779	-0.292	-1.483	-0.064	0.061	1.096
@ RCCV	93111	-2.387	2.996	-0.082	-1.455	-0.268	-0.037	0.959	0.002
26 Slab	96144	0.039	2.670	2.994	-0.152	-0.132	0.104	-0.028	0.043
EL17.5m	96186	2.697	-1.893	-1.089	-0.101	-0.480	-0.033	0.018	0.387
@ RCCV	96113	-4.345	-3.845	-0.732	-3.635	-2.664	-0.140	0.735	-0.030
27 Slab	98472	-0.491	-0.852	4.524	-0.425	-0.142	-0.156	0.325	-0.431
EL27.0m	98514	-0.578	-2.449	-1.119	-0.530	-0.406	-0.021	0.038	-0.376
@ RCCV	98424	-8.688	-9.621	-1.242	0.386	-0.509	0.134	-5.159	-0.068
28 Pool Girder	123054	0.578	-3.049	1.386	2.219	2.152	0.031	-0.307	0.546
@ Storage Pool	123154	0.882	0.664	-0.264	1.850	1.112	-0.331	-0.107	0.233
29 Pool Girder	123062	-2.848	-0.161	-0.520	0.096	0.138	0.035	-0.092	0.076
@ Cavity	123162	-2.548	-0.130	-0.518	0.072	-0.199	0.056	-0.181	0.097
30 Pool Girder	123067	-3.044	-4.728	-1.664	0.540	0.402	-0.076	-0.115	0.516
@ Fuel Pool	123167	-2.836	-2.339	-2.121	0.175	-0.523	-0.229	0.021	0.153
31 MS Tunnel	150122	0.267	-0.536	1.825	1.079	3.149	-0.033	-0.584	0.414
Wall and Slab	96611	-0.243	2.761	-0.171	-1.125	-6.749	-0.368	0.367	0.185
	98614	-0.176	2.269	-0.136	-0.720	-10.191	0.037	0.428	0.285

Table 3G.1-17

Results of NASTRAN Analysis, Thermal Load (LOCA After 6 minutes: Winter)

Location	Element ID	Nx (MN/m)	Ny (MN/m)	Nxy (MN/m)	Mx (MNm/m)	My (MNm/m)	Mxy (MNm/m)	Qx (MN/m)	Qy (MN/m)
1 RPV	5006	-3.476	1.649	-0.329	-6.696	-6.462	-0.046	0.105	1.012
Pedestal	5013	-3.121	1.796	-0.097	-6.854	-6.851	-0.006	0.027	0.925
Bottom	5024	-3.419	1.892	-0.003	-6.894	-6.129	-0.026	-0.036	1.045
2 RPV	6006	0.080	1.775	0.154	-6.175	-4.043	0.264	0.065	-1.515
Pedestal	6013	-0.061	1.444	-0.177	-6.419	-3.904	-0.057	-0.026	-1.669
Mid-Height	6024	-0.245	2.050	0.059	-7.408	-2.297	-0.304	-0.003	-1.547
3 RPV	6606	20.997	2.192	0.564	-6.643	-5.510	-0.035	-1.941	0.870
Pedestal	6613	21.088	1.964	-0.425	-6.702	-5.546	0.139	2.063	0.862
Top	6624	21.900	2.601	0.228	-6.671	-5.665	0.005	-2.338	1.055
4 RCCV	1806	2.533	0.468	-0.194	-4.438	-8.138	0.077	0.083	-1.750
Wetwell	1813	1.866	-2.167	-0.420	-4.274	-7.773	-0.025	-0.007	-1.523
Bottom	1824	2.926	-2.481	0.046	-4.432	-8.134	0.020	-0.085	-1.667
5 RCCV	2606	1.379	0.586	-0.171	-3.308	-1.033	0.018	0.039	0.074
Wetwell	2613	0.111	-2.544	-0.109	-3.090	-1.052	0.009	-0.075	0.370
Mid-Height	2624	0.965	-2.909	-0.087	-3.293	-0.935	-0.026	0.067	0.189
6 RCCV	3406	11.723	1.461	0.327	-4.151	-8.468	-0.227	0.461	3.349
Wetwell	3413	8.032	-3.439	0.044	-4.382	-9.151	-0.402	0.538	3.335
Top	3424	10.292	-4.166	0.471	-3.681	-5.045	-0.039	-0.006	2.165
7 RCCV	3606	8.504	1.377	0.674	-5.342	-9.036	0.607	0.534	-1.980
Drywell	3613	4.607	-4.161	1.005	-4.955	-6.227	-0.363	0.317	-0.820
Bottom	3624	-4.291	-6.043	0.252	-0.934	-2.498	0.068	0.000	0.351
8 RCCV	4006	5.952	2.178	0.212	-5.110	-5.057	0.011	-0.126	-0.683
Drywell	4013	4.287	-5.850	1.041	-4.672	-4.289	0.014	-0.132	-0.308
Mid-Height	4976	-2.660	-5.335	0.580	-0.954	-1.780	0.003	0.013	-0.584
9 RCCV	4406	6.433	1.711	-0.232	-4.475	-3.816	0.299	0.087	-0.150
Drywell	4413	0.711	-6.632	-0.292	-4.753	-4.467	0.253	-0.243	0.643
Top	4424	-5.846	-4.171	0.767	-0.363	1.129	-0.024	-0.022	-1.462
10 Basemat	80003	-4.270	-5.140	0.021	-8.130	-8.102	-0.039	0.029	-0.008
@ Center	80007	-4.296	-5.104	0.056	-8.096	-8.099	-0.037	0.028	-0.009
	80012	-4.302	-5.040	0.042	-8.079	-8.109	-0.032	0.024	-0.001
11 Basemat	80206	-4.260	-5.523	0.137	-8.575	-8.460	0.003	0.005	-0.035
Inside	80213	-4.445	-5.127	0.161	-8.289	-8.565	-0.151	-0.018	-0.103
RPV Pedestal	80224	-4.372	-4.948	0.081	-8.177	-8.193	-0.045	-0.038	0.010
12 S/P Slab	83306	-10.607	10.981	0.454	-4.700	-2.770	0.032	-0.288	0.000
@ RPV	83313	-10.822	11.242	-0.850	-4.737	-2.848	-0.039	-0.302	-0.028
	83324	-10.702	11.862	1.279	-4.487	-2.654	0.006	-0.156	0.046
13 S/P Slab	83406	-6.490	4.881	-0.530	-3.815	-3.181	-0.001	-0.306	0.016
@ Center	83413	-6.986	5.307	0.315	-3.900	-3.257	-0.015	-0.278	-0.011
	83424	-6.630	5.823	0.078	-3.895	-3.148	-0.003	-0.210	0.009
14 S/P Slab	83506	-3.948	2.320	-0.446	-2.906	-3.131	-0.038	-0.275	0.016
@ RCCV	83513	-4.567	2.419	0.440	-3.190	-3.174	-0.008	-0.192	-0.001
	83524	-4.038	3.201	-0.017	-3.278	-3.153	0.013	-0.168	-0.005
15 Topslab	98120	-7.068	-4.258	-0.770	0.956	0.732	2.765	-0.161	-0.002
@ Drywell Head	98135	-8.729	-5.283	0.235	3.147	-2.057	-1.132	0.380	-0.267
Opening	98104	-4.999	-1.752	0.585	-1.461	3.712	-1.500	0.185	-0.214
16 Topslab	98149	-6.075	-2.540	-1.137	2.229	2.310	0.496	0.037	0.048
@ Center	98170	-5.510	-3.566	-1.042	2.141	2.864	-0.042	0.030	0.389
	98109	-6.256	-0.887	0.773	1.219	2.564	-0.119	0.329	-0.005
17 Topslab	98174	-4.871	-2.689	-0.476	2.352	3.211	0.255	-0.023	0.434
@ RCCV	98197	-7.584	-2.926	-1.360	1.917	3.110	0.130	0.154	-0.447
	98103	-6.577	-2.458	-0.070	3.431	3.308	0.118	0.450	0.084

Table 3G.1-17

Results of NASTRAN Analysis, Thermal Load (LOCA After 6 minutes: Winter) (Continued)

Location	Element ID	Nx (MN/m)	Ny (MN/m)	Nxy (MN/m)	Mx (MNm/m)	My (MNm/m)	Mxy (MNm/m)	Qx (MN/m)	Qy (MN/m)
18 Wall	6	1.177	-0.473	-0.669	0.101	1.063	-0.040	0.024	0.044
Below RCCV	13	0.307	-3.027	-0.689	0.408	2.284	-0.002	0.019	0.475
Bottom	24	0.412	-3.041	0.146	0.425	2.350	-0.005	-0.002	0.516
19 Wall	806	1.601	-1.332	0.182	0.235	1.292	0.083	-0.053	-0.063
Below RCCV	813	1.036	-2.990	-0.508	0.175	1.290	-0.027	0.006	0.450
Mid-Height	824	0.890	-3.046	0.126	0.176	1.306	0.019	0.010	0.396
20 Wall	1606	11.606	-2.042	0.301	-0.668	-3.250	0.099	0.085	2.306
Below RCCV	1613	11.229	-3.474	-0.425	-0.785	-4.386	-0.008	-0.014	2.714
Top	1624	12.187	-3.970	-0.124	-0.867	-4.480	-0.001	-0.082	2.817
21 Exterior Wall	20011	3.023	3.384	0.790	0.274	1.136	0.041	-0.173	0.330
@ EL-11.50	20023	-1.459	-1.215	1.590	1.936	3.930	0.184	0.310	0.647
~-10.50m	30010	0.421	2.641	-0.135	1.081	3.585	-0.018	-0.024	-0.601
	30020	-0.090	-1.196	-0.238	0.081	1.104	0.123	-0.022	-0.270
	40001	-0.154	-0.831	0.014	0.123	1.237	-0.081	0.114	-0.310
	40011	0.865	2.785	0.044	1.075	3.674	0.007	0.012	-0.638
22 Exterior Wall	22011	3.577	2.789	-0.075	-0.128	-0.161	0.049	0.032	-0.031
@ EL-4.65	22023	1.984	-3.558	-1.991	0.092	0.423	-0.047	0.570	0.405
~-6.60m	32010	14.408	6.124	0.009	-2.798	-2.759	0.004	-0.008	0.040
	32020	0.445	4.720	2.524	-0.285	-1.833	-0.377	0.922	0.167
	42001	2.451	3.607	2.534	-0.371	-1.611	-0.058	-0.794	-0.254
	42011	12.432	4.405	0.143	-2.975	-2.774	0.081	0.081	0.172
23 Exterior Wall	24211	4.177	2.901	-0.313	0.092	0.628	0.014	-0.122	1.431
@ EL22.50	24224	0.340	4.642	-3.562	0.871	-0.344	-0.446	-0.824	-0.417
~24.60m	34210	15.323	4.794	-0.317	-2.778	-2.409	0.015	-0.011	0.104
	34220	1.721	4.437	2.297	0.980	-1.464	-0.240	1.609	0.013
	44201	1.001	5.209	0.300	0.668	-1.698	0.337	-1.911	0.044
24 Basemat	90140	1.052	1.448	1.374	0.756	-0.217	-0.971	-0.682	-0.069
@ Wall	90182	1.619	0.481	0.610	-0.246	-3.861	0.184	-0.141	2.769
Below RCCV	90111	0.567	2.209	-0.001	-4.129	-0.522	0.050	2.860	0.127
25 Slab	93140	-0.669	2.312	4.286	-0.515	-0.395	0.287	-0.135	0.111
EL4.65m	93182	4.229	-4.036	-1.098	-0.354	-1.829	-0.083	0.075	1.370
@ RCCV	93111	-3.602	4.956	-0.257	-1.768	-0.316	-0.047	1.178	0.000
26 Slab	96144	-0.269	4.712	6.965	-0.230	-0.125	0.167	-0.073	0.023
EL17.5m	96186	6.688	-4.125	-1.418	-0.091	-0.316	-0.048	0.016	0.347
@ RCCV	96113	-8.342	2.574	-1.682	-4.481	-2.783	-0.199	1.240	-0.059
27 Slab	98472	-0.778	-0.772	5.392	-0.313	0.031	-0.311	0.451	-0.561
EL27.0m	98514	0.436	-2.393	-1.392	-0.533	-0.070	-0.005	0.036	-0.726
@ RCCV	98424	-9.063	-6.855	-1.452	1.316	-0.418	0.194	-5.559	-0.101
28 Pool Girder	123054	1.314	-2.832	1.430	2.281	2.120	0.027	-0.232	0.482
@ Storage Pool	123154	1.031	0.747	-0.407	1.925	1.145	-0.338	-0.086	0.247
29 Pool Girder	123062	-1.254	-0.148	-0.719	0.101	0.323	0.027	0.057	0.172
@ Cavity	123162	-1.691	-0.032	-0.470	0.128	-0.117	-0.003	-0.151	0.085
30 Pool Girder	123067	-2.405	-6.001	-1.842	0.639	0.439	-0.117	-0.150	0.470
@ Fuel Pool	123167	-2.204	-2.669	-2.246	0.268	-0.449	-0.228	-0.011	0.180
31 MS Tunnel	150122	0.224	-0.515	1.901	1.053	3.140	-0.007	-0.584	0.364
Wall and Slab	96611	-0.447	4.103	-0.332	-1.287	-7.109	-0.423	0.426	0.209
	98614	-0.187	1.989	-0.145	-0.861	-10.477	-0.011	0.470	0.303

Table 3G.1-18

Results of NASTRAN Analysis, Thermal Load (LOCA After 72 hours: Winter)

Location	Element ID	Nx (MN/m)	Ny (MN/m)	Nxy (MN/m)	Mx (MNm/m)	My (MNm/m)	Mxy (MNm/m)	Qx (MN/m)	Qy (MN/m)
1 RPV	5006	-12.849	0.250	-0.523	-16.011	-12.625	-0.093	0.227	4.158
Pedestal	5013	-12.356	0.343	-0.104	-16.288	-13.239	-0.007	0.021	4.062
Bottom	5024	-12.862	0.231	0.003	-16.285	-11.829	-0.073	-0.054	4.265
2 RPV	6006	-2.408	0.615	0.443	-16.093	-14.923	0.436	0.146	-1.774
Pedestal	6013	-2.624	0.212	-0.206	-16.582	-14.795	-0.048	-0.033	-2.015
Mid-Height	6024	-2.728	0.667	0.076	-18.533	-11.361	-0.661	0.020	-1.697
3 RPV	6606	8.837	0.682	0.577	-16.163	-12.297	0.057	-1.395	-2.012
Pedestal	6613	9.213	0.732	-0.359	-16.199	-12.536	0.030	1.518	-1.952
Top	6624	9.545	0.848	0.253	-16.174	-12.377	0.066	-1.768	-1.800
4 RCCV	1806	-1.533	-1.021	-0.228	-10.248	-14.646	0.090	0.096	-1.555
Wetwell	1813	-2.037	-4.249	-0.394	-10.039	-14.121	-0.043	-0.006	-1.254
Bottom	1824	-1.011	-4.103	0.136	-10.224	-14.384	0.028	-0.105	-1.321
5 RCCV	2606	-4.269	-1.249	-0.234	-9.962	-7.559	0.001	0.044	0.117
Wetwell	2613	-5.197	-5.323	-0.038	-9.725	-7.432	-0.015	-0.093	0.418
Mid-Height	2624	-4.923	-4.754	-0.111	-10.020	-7.637	-0.043	0.078	0.194
6 RCCV	3406	5.196	-0.343	0.501	-10.839	-14.129	0.028	0.144	2.477
Wetwell	3413	3.430	-7.154	0.362	-10.781	-14.124	-0.109	0.133	2.640
Top	3424	2.843	-6.398	0.484	-9.990	-9.736	0.045	-0.108	0.896
7 RCCV	3606	0.851	-0.258	0.079	-12.665	-14.960	0.282	0.179	-0.838
Drywell	3613	-0.941	-8.499	1.390	-12.337	-13.241	-0.243	0.024	-0.345
Bottom	3624	-10.577	-8.035	0.298	-7.210	-6.858	0.089	-0.061	1.477
8 RCCV	4006	1.893	0.841	-0.323	-12.242	-12.219	0.193	-0.154	-0.810
Drywell	4013	1.197	-10.529	1.292	-12.197	-11.585	0.046	-0.165	-0.457
Mid-Height	4976	-7.092	-6.953	0.638	-7.681	-8.655	0.012	0.039	-0.305
9 RCCV	4406	6.726	0.270	-1.390	-11.635	-9.864	0.510	0.460	-0.602
Drywell	4413	-0.989	-11.897	-0.372	-12.126	-10.994	0.411	-0.180	0.175
Top	4424	-10.172	-5.565	0.973	-7.107	-5.872	-0.070	-0.009	-1.761
10 Basemat	80003	-1.587	-2.420	-0.001	-8.464	-8.777	-0.040	0.022	-0.010
@ Center	80007	-1.600	-2.375	0.039	-8.444	-8.779	-0.040	0.014	-0.014
	80012	-1.607	-2.298	0.028	-8.433	-8.799	-0.031	0.005	0.001
11 Basemat	80206	-1.604	-2.924	0.120	-8.962	-9.256	0.034	-0.007	-0.049
Inside	80213	-1.721	-2.346	0.088	-8.685	-9.343	-0.166	-0.026	-0.164
RPV Pedestal	80224	-1.574	-2.175	0.061	-8.644	-8.932	-0.052	-0.105	0.019
12 S/P Slab	83306	-11.672	3.835	0.218	-9.639	-8.194	0.035	-0.073	-0.040
@ RPV	83313	-11.910	4.316	-0.426	-9.668	-8.271	-0.025	-0.075	0.011
	83324	-11.696	4.693	0.966	-9.530	-8.130	-0.002	0.004	0.007
13 S/P Slab	83406	-8.140	-0.574	-0.507	-9.101	-8.502	0.000	-0.107	0.016
@ Center	83413	-8.751	0.109	0.485	-9.199	-8.591	-0.012	-0.069	-0.008
	83424	-8.209	0.422	0.013	-9.166	-8.499	0.001	-0.043	0.006
14 S/P Slab	83506	-6.270	-2.431	-0.382	-8.852	-8.637	-0.050	-0.135	0.021
@ RCCV	83513	-7.033	-2.078	0.612	-9.208	-8.687	-0.011	-0.022	0.001
	83524	-6.237	-1.445	-0.080	-9.171	-8.643	0.017	-0.039	-0.005
15 Topslab	98120	-11.465	-10.588	-5.034	7.058	5.009	5.155	-1.417	-1.082
@ Drywell Head	98135	-16.071	-6.982	2.437	10.528	-0.434	-1.821	1.058	-1.141
Opening	98104	-6.701	-12.118	2.879	2.391	11.786	-3.140	0.876	-0.611
16 Topslab	98149	-11.277	-3.014	-1.862	5.796	8.885	0.958	0.550	-1.906
@ Center	98170	-9.611	-4.561	-0.870	4.301	5.407	-0.101	-0.114	0.048
	98109	-7.853	-1.643	0.877	9.057	11.508	-0.324	0.767	0.077
17 Topslab	98174	-9.261	-3.967	-1.472	5.055	6.597	0.112	-0.062	0.291
@ RCCV	98197	-11.733	-4.685	-1.499	4.215	6.202	0.220	0.358	-0.438
	98103	-7.870	-5.563	-0.327	12.878	12.662	0.251	0.583	0.155

Table 3G.1-18

Results of NASTRAN Analysis, Thermal Load (LOCA After 72 hours: Winter) (Continued)

Location	Element ID	Nx (MN/m)	Ny (MN/m)	Nxy (MN/m)	Mx (MNm/m)	My (MNm/m)	Mxy (MNm/m)	Qx (MN/m)	Qy (MN/m)
18 Wall	6	0.745	-0.977	-0.895	0.238	1.920	-0.053	0.044	0.293
Below RCCV	13	-0.174	-4.065	-0.782	0.604	3.357	-0.002	0.023	0.785
Bottom	24	0.101	-3.765	0.212	0.594	3.314	-0.007	-0.003	0.779
19 Wall	806	1.907	-2.149	0.225	0.307	1.688	0.090	-0.068	-0.082
Below RCCV	813	1.360	-3.986	-0.566	0.221	1.702	-0.034	0.006	0.602
Mid-Height	824	1.151	-3.732	0.198	0.224	1.729	0.027	0.015	0.502
20 Wall	1606	15.858	-3.114	0.381	-0.839	-4.009	0.124	0.101	3.042
Below RCCV	1613	15.713	-4.649	-0.420	-1.005	-5.538	-0.011	-0.016	3.612
Top	1624	16.688	-4.842	-0.107	-1.115	-5.549	0.001	-0.106	3.698
21 Exterior Wall	20011	3.314	4.817	0.922	0.447	1.837	0.052	-0.225	0.576
@ EL-11.50	20023	-1.453	-1.169	1.549	1.890	4.020	0.180	0.322	0.683
~-10.50m	30010	0.688	3.733	-0.258	1.289	4.763	-0.022	-0.031	-0.865
	30020	-0.058	-1.477	-0.392	0.021	1.209	0.144	-0.026	-0.282
	40001	-0.090	-1.141	0.056	0.039	1.330	-0.097	0.105	-0.322
	40011	1.295	3.630	0.051	1.243	4.654	0.011	0.015	-0.844
22 Exterior Wall	22011	5.080	4.474	-0.209	-0.175	-0.228	0.067	0.045	0.074
@ EL-4.65	22023	2.211	-3.114	-2.141	0.528	0.492	-0.052	0.386	0.393
~-6.60m	32010	16.739	7.724	-0.075	-2.893	-3.003	-0.001	-0.014	0.022
	32020	0.653	4.869	2.518	0.104	-1.860	-0.395	1.226	0.199
	42001	2.720	3.801	2.644	0.130	-1.563	-0.051	-0.998	-0.239
	42011	14.110	5.515	0.234	-3.164	-3.046	0.073	0.090	0.169
23 Exterior Wall	24211	6.073	5.669	-0.239	0.176	0.982	0.008	-0.147	1.336
@ EL22.50	24224	1.011	5.349	-3.664	1.966	0.071	-0.637	-1.563	-0.323
~24.60m	34210	21.813	5.545	-0.581	-2.903	-2.819	0.035	-0.002	-0.128
	34220	2.794	5.432	4.414	2.629	-1.178	-0.711	2.571	0.094
	44201	1.793	6.586	0.562	2.230	-1.491	0.539	-2.967	0.044
24 Basemat	90140	0.838	1.691	1.751	-0.171	-1.046	-1.095	-1.135	0.139
@ Wall	90182	1.908	0.687	0.488	-0.873	-5.527	0.260	-0.110	3.825
Below RCCV	90111	0.733	2.908	-0.011	-5.322	-1.147	0.107	3.687	0.151
25 Slab	93140	-0.383	3.018	5.804	-0.739	-0.564	0.413	-0.192	0.163
EL4.65m	93182	6.161	-5.154	-1.518	-0.481	-2.508	-0.114	0.105	1.903
@ RCCV	93111	-4.494	6.820	-0.448	-2.369	-0.414	-0.066	1.594	0.001
26 Slab	96144	0.733	5.839	8.138	-0.232	-0.178	0.174	-0.043	0.066
EL17.5m	96186	9.999	-4.559	-2.165	-0.150	-0.675	-0.057	0.023	0.638
@ RCCV	96113	-9.165	5.149	-1.811	-4.378	-2.755	-0.237	1.010	-0.100
27 Slab	98472	-3.645	-3.148	5.906	-1.729	-1.315	-0.297	0.534	-0.685
EL27.0m	98514	-2.863	-2.858	-1.566	-1.927	-1.719	-0.030	0.065	-0.720
@ RCCV	98424	-8.825	-1.775	-2.345	3.485	0.429	0.374	-5.774	-0.156
28 Pool Girder	123054	3.583	1.298	2.382	3.613	2.453	-0.343	0.113	0.317
@ Storage Pool	123154	3.638	3.575	-2.911	3.372	1.303	-0.374	-0.255	0.413
29 Pool Girder	123062	0.505	0.115	-1.385	3.836	3.893	0.008	0.034	0.188
@ Cavity	123162	1.929	0.409	-1.840	3.803	2.820	0.092	-0.288	0.644
30 Pool Girder	123067	-2.101	-7.271	-3.005	3.592	3.540	-0.636	0.317	0.815
@ Fuel Pool	123167	-0.679	-2.776	-3.132	2.749	1.834	-0.242	-0.176	0.616
31 MS Tunnel	150122	0.316	-0.711	1.797	0.940	3.101	0.011	-0.551	0.426
Wall and Slab	96611	-0.557	4.662	-0.414	-1.254	-7.116	-0.406	0.420	0.206
	98614	-0.043	0.725	-0.043	-0.850	-9.922	-0.018	0.459	0.307

Table 3G.1-19

Results of NASTRAN Analysis, Seismic Load (Horizontal: North to South Direction)

Location	Element ID	Nx (MN/m)	Ny (MN/m)	Nxy (MN/m)	Mx (MNm/m)	My (MNm/m)	Mxy (MNm/m)	Qx (MN/m)	Qy (MN/m)
1 RPV	5006	-3.078	-4.175	-1.042	0.833	5.067	0.048	0.055	2.169
Pedestal	5013	-0.390	1.511	-1.461	0.297	1.837	-0.045	0.184	0.680
Bottom	5024	2.338	7.409	-0.116	-0.517	-1.859	0.009	0.013	-1.003
2 RPV	6006	0.367	-2.350	-0.847	-0.143	-0.031	0.008	0.133	-0.017
Pedestal	6013	-0.395	1.443	-1.458	-0.321	-0.158	-0.039	-0.055	0.014
Mid-Height	6024	-0.465	3.711	0.279	0.247	0.151	-0.039	-0.032	-0.200
3 RPV	6606	0.017	-1.487	-0.164	-0.294	-2.729	-0.257	0.607	0.877
Pedestal	6613	-1.086	1.320	-1.172	-0.447	-1.613	0.333	-0.203	0.294
Top	6624	0.385	3.868	-0.083	0.212	-0.055	0.042	-0.140	-0.074
4 RCCV	1806	-1.606	-1.571	-4.006	0.296	2.004	-0.079	0.033	0.748
Wetwell	1813	-0.404	2.958	-4.588	0.114	0.845	-0.040	0.019	0.342
Bottom	1824	0.823	6.222	-0.283	-0.034	-0.317	-0.008	0.002	-0.226
5 RCCV	2606	-0.346	-1.042	-4.081	-0.061	-0.101	-0.121	-0.015	0.195
Wetwell	2613	-0.770	2.654	-4.543	-0.046	-0.085	-0.043	-0.029	0.156
Mid-Height	2624	-0.026	4.626	-0.272	0.075	0.159	-0.002	-0.003	-0.036
6 RCCV	3406	0.033	-0.509	-3.758	-0.091	-0.210	-0.079	0.007	0.126
Wetwell	3413	-0.613	2.314	-4.337	-0.025	-0.166	-0.107	0.116	0.070
Top	3424	-0.571	3.362	-0.182	0.063	0.331	0.035	-0.019	-0.131
7 RCCV	3606	0.137	-0.283	-3.728	0.109	0.809	-0.008	0.028	0.356
Drywell	3613	-0.644	2.004	-3.951	0.094	0.502	-0.021	0.109	0.201
Bottom	3624	-0.605	3.556	-0.196	-0.051	-0.246	0.052	0.003	0.000
8 RCCV	4006	1.227	-0.182	-3.299	0.010	-0.327	-0.061	-0.071	0.238
Drywell	4013	-0.209	2.269	-3.819	0.015	-0.082	-0.084	0.017	0.120
Mid-Height	4976	-0.521	2.679	-0.246	-0.082	-0.178	-0.016	0.012	-0.033
9 RCCV	4406	1.216	-0.075	-2.465	-0.163	-0.891	0.060	0.075	0.192
Drywell	4413	0.646	2.551	-3.248	-0.107	-0.447	-0.002	0.014	0.079
Top	4424	-0.993	1.982	-0.206	-0.076	-0.383	-0.022	-0.006	0.001
10 Basemat	80003	3.080	2.306	-0.508	-7.882	-6.855	0.153	0.538	0.093
@ Center	80007	3.116	2.498	-0.430	-7.171	-6.634	0.306	0.665	0.119
	80012	2.788	2.823	-0.252	-6.620	-6.333	0.091	0.746	0.004
11 Basemat	80206	3.713	1.292	-1.433	-9.991	-7.678	0.701	0.553	0.030
Inside	80213	3.153	2.526	-2.026	-6.080	-4.595	1.368	0.864	0.774
RPV Pedestal	80224	2.472	4.250	-0.216	-0.051	-2.844	0.232	1.887	0.110
12 S/P Slab	83306	-0.349	-0.831	-1.485	-2.817	-1.586	-0.299	-1.008	0.148
@ RPV	83313	-0.394	-1.430	0.743	-1.611	-1.010	-0.429	-0.553	0.176
	83324	-0.614	-0.161	0.190	-0.241	-0.271	-0.029	-0.035	0.018
13 S/P Slab	83406	-0.287	-1.184	-1.348	0.406	-0.877	-0.229	-0.706	-0.011
@ Center	83413	-0.302	-1.151	0.698	0.211	-0.628	-0.292	-0.403	0.009
	83424	-0.872	-0.188	0.099	0.030	-0.303	-0.018	-0.056	0.001
14 S/P Slab	83506	-0.132	-1.321	-1.107	2.379	0.033	-0.030	-0.544	-0.050
@ RCCV	83513	-0.266	-0.932	0.680	1.308	-0.079	-0.045	-0.310	-0.055
	83524	-0.909	-0.287	0.053	0.150	-0.214	0.000	-0.034	-0.004
15 Topslab	98120	0.262	0.033	0.110	-0.065	-0.092	-0.054	-0.056	-0.030
@ Drywell Head	98135	0.998	0.106	-0.161	-0.201	-0.006	0.013	-0.024	0.022
Opening	98104	-0.049	-1.669	0.061	-0.067	-0.367	0.013	-0.045	0.019
16 Topslab	98149	0.438	0.537	0.209	-0.113	0.041	-0.116	-0.057	0.023
@ Center	98170	0.227	-0.294	0.212	-0.122	-0.161	-0.016	-0.024	-0.022
	98109	0.149	-1.417	-0.081	-0.253	-0.418	-0.014	-0.073	0.066
17 Topslab	98174	0.047	1.167	0.186	0.164	0.137	-0.291	-0.093	0.052
@ RCCV	98197	0.194	-0.519	0.494	0.097	0.031	-0.112	0.026	0.134
	98103	-0.080	-1.586	0.048	-1.179	-0.611	0.011	-0.269	0.018

Table 3G.1-19

Results of NASTRAN Analysis, Seismic Load (Horizontal: North to South Direction) (Continued)

Location	Element ID	Nx (MN/m)	Ny (MN/m)	Nxy (MN/m)	Mx (MNm/m)	My (MNm/m)	Mxy (MNm/m)	Qx (MN/m)	Qy (MN/m)
18 Wall	6	-4.089	-2.984	-3.223	0.942	5.592	0.027	0.004	2.077
Below RCCV	13	0.044	2.815	-3.741	0.609	3.227	-0.055	0.100	1.002
Bottom	24	2.858	8.167	-0.026	0.203	1.094	-0.007	0.001	0.035
19 Wall	806	-2.161	-2.456	-3.484	-0.087	-0.286	-0.009	0.025	0.212
Below RCCV	813	-0.327	3.127	-4.708	-0.001	-0.043	-0.034	-0.003	0.282
Mid-Height	824	1.116	7.455	-0.159	0.028	0.188	-0.002	0.001	0.136
20 Wall	1606	-1.430	-1.890	-3.843	-0.279	-1.325	-0.071	0.012	0.200
Below RCCV	1613	-0.183	2.987	-4.716	-0.232	-1.214	-0.026	0.007	0.350
Top	1624	0.886	6.169	-0.227	-0.043	-0.346	-0.008	0.002	0.183
21 Exterior Wall	20011	-0.416	-0.625	1.004	1.925	7.945	0.042	-0.075	2.959
@ EL-11.50	20023	0.143	-0.894	-1.064	-0.798	1.248	0.158	1.179	0.823
~-10.50m	30010	1.290	2.212	-3.435	0.480	2.603	-0.041	-0.077	-0.721
	30020	0.106	2.160	-0.480	0.058	1.101	0.015	-0.290	-0.250
	40001	0.368	1.938	-0.760	-0.169	0.566	-0.075	0.004	-0.162
	40011	3.319	3.604	-0.077	0.119	1.035	0.010	0.003	-0.190
22 Exterior Wall	22011	-0.375	-6.589	2.336	0.104	0.902	0.146	-0.030	0.823
@ EL-4.65	22023	0.009	-4.334	-1.290	-0.268	0.148	-0.135	0.328	0.115
~-6.60m	32010	-0.869	1.249	-4.104	-0.010	-0.012	-0.003	-0.001	-0.103
	32020	-0.044	3.032	-1.635	0.150	0.029	0.006	0.127	-0.005
	42001	0.119	3.220	-1.633	0.200	-0.014	-0.015	-0.075	-0.006
	42011	0.726	3.097	0.252	0.005	-0.067	0.008	0.000	0.083
23 Exterior Wall	24211	-1.009	-4.826	0.238	-0.200	-0.787	-0.045	0.004	0.877
@ EL22.50	24224	-0.225	-6.903	0.344	0.657	0.947	-0.281	0.147	1.024
~24.60m	34210	-1.170	0.230	-3.576	-0.029	-0.185	-0.009	0.011	-0.087
	34220	-0.065	1.547	-1.281	-0.006	0.005	0.002	0.001	-0.008
	44201	-0.117	1.850	-1.080	0.020	0.037	-0.012	0.027	-0.016
24 Basemat	90140	0.231	1.224	-1.952	-6.981	-0.849	-0.232	-2.965	1.218
@ Wall	90182	3.251	0.676	-1.468	-1.580	-0.623	1.398	-1.586	0.697
Below RCCV	90111	1.121	5.952	-0.261	0.290	-1.145	0.351	-1.961	-0.121
25 Slab	93140	-2.212	0.335	-0.130	-0.397	-0.242	0.172	-0.091	0.121
EL4.65m	93182	-0.561	-0.141	-0.474	-0.087	-0.334	-0.010	0.019	0.308
@ RCCV	93111	-0.076	-0.100	0.019	0.081	0.000	0.008	-0.055	0.002
26 Slab	96144	-0.481	0.159	0.141	-0.314	-0.250	0.168	-0.065	0.077
EL17.5m	96186	-0.589	-0.129	-0.051	-0.074	-0.338	-0.010	0.025	0.270
@ RCCV	96113	0.212	-1.012	-0.014	0.453	-0.039	-0.008	-0.423	-0.063
27 Slab	98472	1.004	-0.253	-0.218	-0.189	-0.234	0.105	-0.091	0.123
EL27.0m	98514	-0.240	-0.145	-0.203	-0.069	-0.239	0.005	0.008	0.255
@ RCCV	98424	1.161	-1.318	0.136	-1.076	-0.470	0.079	1.128	0.077
28 Pool Girder	123054	-0.118	1.522	-0.503	-0.071	-0.002	0.024	-0.010	0.023
@ Storage Pool	123154	-1.214	0.480	-0.372	-0.108	-0.035	0.013	-0.035	0.005
29 Pool Girder	123062	-0.156	-0.112	0.301	-0.071	-0.019	-0.024	0.025	0.017
@ Cavity	123162	-0.926	-0.130	0.190	-0.153	-0.036	-0.019	0.056	0.002
30 Pool Girder	123067	-0.689	1.948	0.905	0.093	0.040	0.024	0.036	0.039
@ Fuel Pool	123167	-1.154	0.378	1.250	0.031	0.034	0.005	0.005	0.002
31 MS Tunnel	150122	-0.009	0.169	-0.046	-0.038	-0.142	-0.009	0.008	-0.031
Wall and Slab	96611	0.034	-0.285	0.031	-0.097	-0.387	-0.021	0.042	0.016
	98614	0.040	-0.197	0.031	0.121	0.435	0.049	-0.038	-0.018

Table 3G.1-20

Results of NASTRAN Analysis, Seismic Load (Horizontal: East to West Direction)

Location	Element ID	Nx (MN/m)	Ny (MN/m)	Nxy (MN/m)	Mx (MNm/m)	My (MNm/m)	Mxy (MNm/m)	Qx (MN/m)	Qy (MN/m)
1 RPV	5006	3.616	7.896	-1.994	-0.849	-4.468	-0.071	0.270	-1.899
Pedestal	5013	5.107	12.264	0.228	-1.289	-6.829	-0.010	0.019	-3.064
Bottom	5024	0.410	0.731	3.301	-0.102	-0.450	0.017	-0.296	-0.196
2 RPV	6006	-0.514	4.033	-2.796	0.013	0.146	-0.182	-0.004	-0.068
Pedestal	6013	-0.991	6.124	0.364	0.229	0.113	-0.037	0.000	-0.218
Mid-Height	6024	-0.167	1.387	5.018	0.016	0.037	0.335	0.177	0.034
3 RPV	6606	-0.946	2.274	-2.273	0.228	1.652	0.167	-0.116	-0.731
Pedestal	6613	-0.779	3.354	0.061	0.555	2.493	-0.059	-0.146	-1.077
Top	6624	-0.105	0.242	3.331	0.039	0.167	-0.210	0.273	-0.086
4 RCCV	1806	0.709	5.463	-4.576	-0.207	-1.028	-0.018	0.001	-0.388
Wetwell	1813	1.098	7.033	0.944	-0.271	-1.619	-0.015	0.005	-0.661
Bottom	1824	0.050	0.539	7.272	-0.030	-0.115	0.089	-0.055	-0.058
5 RCCV	2606	0.058	3.845	-4.121	0.016	0.080	-0.050	-0.007	-0.106
Wetwell	2613	0.049	5.254	0.953	0.048	0.137	-0.018	-0.009	-0.248
Mid-Height	2624	0.047	0.284	6.677	0.011	0.038	0.110	0.036	-0.014
6 RCCV	3406	-0.396	2.515	-3.894	0.039	0.160	-0.197	0.173	-0.103
Wetwell	3413	-0.303	3.931	0.992	0.062	0.353	0.040	-0.074	-0.248
Top	3424	-0.180	0.191	5.780	0.028	0.036	0.019	0.009	-0.005
7 RCCV	3606	-0.453	2.336	-3.560	-0.048	-0.352	-0.054	0.168	-0.142
Drywell	3613	-0.305	4.102	1.145	-0.137	-0.791	-0.005	-0.062	-0.291
Bottom	3624	-0.121	0.243	5.543	-0.030	-0.089	0.021	0.024	-0.042
8 RCCV	4006	-0.971	1.370	-3.264	0.012	0.139	-0.095	0.037	-0.115
Drywell	4013	-1.098	3.192	0.982	0.062	0.312	0.006	-0.048	-0.322
Mid-Height	4976	0.129	0.105	5.749	0.045	0.036	0.022	0.038	-0.014
9 RCCV	4406	-1.388	0.546	-2.745	0.129	0.527	-0.010	0.005	-0.229
Drywell	4413	-0.912	2.428	0.851	0.028	0.966	0.161	0.051	-0.023
Top	4424	0.265	0.045	6.072	0.047	-0.005	-0.004	0.040	0.030
10 Basemat	80003	0.038	0.221	1.344	0.306	0.541	-0.515	0.018	0.897
@ Center	80007	0.573	-0.212	0.794	0.710	0.790	-0.263	-0.006	0.861
	80012	-0.120	0.174	0.664	0.117	0.115	0.121	-0.008	0.899
11 Basemat	80206	1.779	-0.232	2.676	3.698	4.684	-2.110	-0.625	1.546
Inside	80213	2.986	-0.463	0.725	4.767	7.918	-0.214	0.021	2.208
RPV Pedestal	80224	0.147	0.113	-1.881	0.485	0.394	1.018	0.080	0.433
12 S/P Slab	83306	-0.494	-0.425	0.891	1.324	0.614	-0.365	0.519	0.181
@ RPV	83313	-0.970	-0.307	0.268	1.939	0.952	0.057	0.747	-0.005
	83324	-0.058	-0.047	-1.477	0.134	0.059	0.519	0.051	-0.251
13 S/P Slab	83406	-0.361	-0.135	0.348	-0.242	0.242	-0.259	0.338	0.009
@ Center	83413	-1.016	-0.152	0.194	-0.305	0.399	0.036	0.490	0.001
	83424	-0.070	-0.035	-0.753	-0.021	0.021	0.360	0.034	0.005
14 S/P Slab	83506	-0.145	-0.185	0.080	-1.214	-0.198	-0.033	0.273	-0.057
@ RCCV	83513	-0.916	-0.244	0.146	-1.684	-0.241	0.013	0.384	0.005
	83524	-0.040	-0.061	-0.423	-0.124	-0.023	0.009	0.029	0.092
15 Topslab	98120	-1.118	-0.895	-0.794	-0.058	-0.448	-0.152	-0.112	-0.106
@ Drywell Head	98135	0.006	0.279	-0.487	-0.184	-0.218	0.084	0.029	-0.103
Opening	98104	0.350	0.508	-0.534	-0.010	-0.422	-0.024	0.037	-0.357
16 Topslab	98149	-1.043	-0.259	-0.557	-0.032	-0.232	-0.014	0.058	0.022
@ Center	98170	-1.070	0.080	-0.819	-0.018	-0.044	-0.012	0.021	-0.024
	98109	0.104	0.000	-0.652	-0.025	-0.207	-0.123	0.002	-0.120
17 Topslab	98174	-1.568	-0.275	-0.736	-0.273	-0.271	0.090	0.120	-0.125
@ RCCV	98197	-1.458	-0.029	-0.717	-0.022	-0.269	-0.034	-0.038	0.008
	98103	-0.204	0.207	-1.162	-0.033	-0.053	-0.210	0.040	-0.046

Table 3G.1-20

Results of NASTRAN Analysis, Seismic Load (Horizontal: East to West Direction) (Continued)

Location	Element ID	Nx (MN/m)	Ny (MN/m)	Nxy (MN/m)	Mx (MNm/m)	My (MNm/m)	Mxy (MNm/m)	Qx (MN/m)	Qy (MN/m)
18 Wall	6	4.230	10.950	-4.293	-0.720	-3.480	-0.050	0.151	-1.462
Below RCCV	13	4.826	10.395	0.412	-0.323	-2.046	-0.014	0.031	-1.063
Bottom	24	0.620	0.743	6.328	0.012	-0.156	0.097	-0.142	-0.100
19 Wall	806	0.719	8.364	-5.143	-0.026	0.175	-0.138	-0.023	0.008
Below RCCV	813	2.014	9.089	0.737	0.003	0.271	-0.015	-0.012	-0.119
Mid-Height	824	0.182	0.748	7.528	0.025	0.045	0.096	0.050	0.019
20 Wall	1606	0.573	5.830	-5.315	0.081	0.664	-0.012	-0.017	-0.149
Below RCCV	1613	0.954	7.084	0.921	0.184	1.109	-0.007	0.009	-0.240
Top	1624	0.049	0.602	7.469	-0.009	0.017	0.051	-0.040	0.018
21 Exterior Wall	20011	-0.722	-1.086	-9.644	-0.079	0.489	0.033	0.100	0.107
@ EL-11.50	20023	-0.002	5.309	-0.104	0.229	0.275	-0.072	-0.017	0.074
~-10.50m	30010	3.516	4.149	1.063	-0.266	-0.885	-0.030	-0.023	0.295
	30020	0.484	3.244	1.306	-0.086	0.522	0.039	0.023	-0.160
	40001	-0.009	3.550	0.797	0.338	1.287	0.004	0.411	-0.235
	40011	-0.266	-0.415	4.312	0.014	-0.081	0.083	0.119	-0.014
22 Exterior Wall	22011	0.537	3.343	-6.626	0.042	-0.013	-0.019	0.032	0.006
@ EL-4.65	22023	0.038	5.577	-3.182	0.117	-0.083	0.087	-0.179	-0.082
~-6.60m	32010	0.671	4.350	1.026	-0.012	-0.086	-0.013	0.000	0.204
	32020	0.056	3.978	2.778	0.123	-0.061	0.010	0.091	0.017
	42001	-0.010	3.735	2.914	0.166	0.067	-0.012	-0.064	-0.031
	42011	0.192	-0.627	5.811	0.041	0.003	0.018	0.036	-0.014
23 Exterior Wall	24211	0.039	0.214	-5.700	-0.006	0.033	0.013	0.004	0.032
@ EL22.50	24224	0.317	5.460	-4.157	-0.291	-0.134	-0.012	0.286	-0.057
~24.60m	34210	-0.150	1.711	0.809	0.066	0.373	-0.007	-0.004	0.142
	34220	-0.136	1.750	2.505	0.147	0.144	0.006	0.041	-0.017
	44201	0.126	1.798	3.007	0.097	0.014	0.058	-0.092	0.023
24 Basemat	90140	0.196	4.879	3.018	0.158	3.225	-2.906	3.389	-5.494
@ Wall	90182	5.519	0.684	0.433	0.172	-0.757	-0.215	-0.078	-3.639
Below RCCV	90111	-0.237	0.778	-0.622	-0.498	0.380	1.211	-0.064	-2.795
25 Slab	93140	0.729	-0.254	-0.202	0.172	0.132	-0.098	0.049	-0.041
EL4.65m	93182	-0.084	-0.021	-0.149	0.083	0.457	0.014	-0.022	-0.412
@ RCCV	93111	0.142	0.032	-0.216	0.000	-0.009	-0.025	0.011	0.004
26 Slab	96144	-0.147	-0.247	-0.205	0.151	0.125	-0.097	0.048	-0.018
EL17.5m	96186	-0.432	0.199	-0.264	0.112	0.623	0.022	-0.033	-0.497
@ RCCV	96113	0.085	-0.188	0.580	0.079	0.029	0.003	-0.024	0.039
27 Slab	98472	0.134	-0.995	-0.433	-0.012	-0.031	0.004	-0.040	0.045
EL27.0m	98514	-0.423	0.166	-0.389	0.062	0.478	-0.007	-0.012	-0.321
@ RCCV	98424	0.378	-0.318	-5.915	0.021	0.027	-0.235	0.055	0.040
28 Pool Girder	123054	0.345	0.136	0.150	0.329	0.157	-0.068	0.025	0.209
@ Storage Pool	123154	-0.375	0.351	0.698	0.192	-0.067	-0.089	0.037	-0.008
29 Pool Girder	123062	-0.446	0.925	0.204	0.076	0.041	-0.040	-0.059	0.058
@ Cavity	123162	-0.572	0.907	0.223	0.104	-0.015	0.008	-0.117	-0.019
30 Pool Girder	123067	0.069	0.085	0.270	0.164	0.151	0.062	0.025	0.261
@ Fuel Pool	123167	-0.416	0.429	-0.328	0.044	-0.119	0.067	-0.051	-0.018
31 MS Tunnel	150122	-0.002	0.117	-0.022	-0.031	-0.115	-0.044	0.008	0.254
Wall and Slab	96611	0.034	-0.078	-0.059	-0.013	-0.065	0.102	-0.004	-0.075
	98614	0.016	0.006	-0.009	0.034	0.113	0.347	-0.032	-0.021

Table 3G.1-21

Results of NASTRAN Analysis, Seismic Load (Vertical: Upward Direction)

Location	Element ID	Nx (MN/m)	Ny (MN/m)	Nxy (MN/m)	Mx (MNm/m)	My (MNm/m)	Mxy (MNm/m)	Qx (MN/m)	Qy (MN/m)
1 RPV	5006	-1.347	2.104	-0.142	0.416	2.400	-0.007	0.016	1.002
Pedestal	5013	-1.094	2.642	-0.206	0.362	2.151	0.000	0.011	0.872
Bottom	5024	-0.811	2.855	-0.014	0.334	1.969	-0.008	-0.003	0.793
2 RPV	6006	0.148	2.129	-0.204	-0.016	-0.066	-0.022	-0.020	0.015
Pedestal	6013	0.166	2.268	-0.308	0.018	-0.024	-0.009	0.013	-0.025
Mid-Height	6024	0.050	1.700	0.177	-0.004	0.032	-0.006	-0.014	-0.053
3 RPV	6606	0.340	1.739	-0.317	-0.389	-2.606	-0.100	-0.083	0.872
Pedestal	6613	0.364	1.782	-0.164	-0.345	-2.532	0.118	0.054	0.845
Top	6624	0.262	1.715	-0.051	-0.365	-2.534	-0.122	-0.050	0.832
4 RCCV	1806	0.410	4.305	-0.142	0.086	0.580	-0.010	0.000	0.125
Wetwell	1813	0.526	4.234	-0.133	0.092	0.506	-0.004	0.000	0.094
Bottom	1824	0.435	4.688	0.050	0.092	0.549	-0.002	0.003	0.112
5 RCCV	2606	0.219	3.889	-0.195	-0.003	0.025	-0.007	0.000	0.093
Wetwell	2613	0.258	3.953	-0.136	0.023	0.051	-0.002	0.001	0.069
Mid-Height	2624	0.284	4.307	0.009	-0.001	0.004	-0.002	0.001	0.101
6 RCCV	3406	0.299	3.274	-0.279	-0.098	-0.605	0.063	-0.097	0.217
Wetwell	3413	0.083	3.770	-0.143	-0.036	-0.291	-0.033	0.040	0.113
Top	3424	0.164	3.715	-0.005	-0.045	-0.311	0.068	-0.075	0.088
7 RCCV	3606	0.144	3.079	-0.154	0.015	-0.026	0.058	-0.076	-0.104
Drywell	3613	-0.084	3.713	-0.179	0.015	0.043	-0.050	0.023	-0.136
Bottom	3624	0.100	3.864	-0.050	0.000	-0.053	0.070	-0.040	-0.075
8 RCCV	4006	-0.474	2.622	-0.080	0.172	0.557	0.047	-0.008	-0.246
Drywell	4013	-0.519	3.950	-0.244	0.053	0.441	0.001	0.007	-0.087
Mid-Height	4976	-0.012	3.210	-0.184	0.018	0.199	0.005	0.007	-0.053
9 RCCV	4406	-0.485	2.127	0.201	0.310	1.743	0.030	0.014	-0.374
Drywell	4413	0.510	4.141	-0.095	0.163	0.892	-0.006	0.007	-0.163
Top	4424	0.012	2.549	-0.147	0.028	0.331	-0.004	-0.001	-0.038
10 Basemat	80003	1.114	1.334	-0.056	-7.809	-8.015	0.028	-0.247	0.194
@ Center	80007	1.136	1.354	-0.047	-7.820	-8.014	0.028	0.036	0.314
	80012	1.133	1.390	-0.047	-7.817	-8.010	0.026	0.304	0.044
11 Basemat	80206	1.061	1.209	-0.090	-5.062	-5.503	-0.898	-1.047	0.927
Inside	80213	1.138	1.395	-0.134	-5.976	-4.336	0.101	0.047	1.429
RPV Pedestal	80224	1.234	1.559	-0.051	-4.341	-6.050	0.156	1.376	0.112
12 S/P Slab	83306	-0.130	-0.374	0.192	-1.919	-1.347	0.009	-1.086	0.025
@ RPV	83313	-0.284	-0.266	0.051	-1.931	-1.343	-0.009	-1.091	-0.024
	83324	-0.256	-0.392	0.019	-1.928	-1.342	0.015	-1.090	0.023
13 S/P Slab	83406	-0.187	-0.349	0.142	0.901	-0.611	0.002	-0.487	0.000
@ Center	83413	-0.380	-0.198	0.016	0.891	-0.591	0.001	-0.490	-0.002
	83424	-0.327	-0.344	0.005	0.898	-0.591	0.002	-0.492	0.001
14 S/P Slab	83506	-0.183	-0.304	0.139	1.510	-0.006	0.009	-0.062	-0.004
@ RCCV	83513	-0.396	-0.180	-0.010	1.527	0.016	0.003	-0.071	-0.003
	83524	-0.326	-0.340	0.001	1.539	0.015	0.001	-0.071	0.001
15 Topslab	98120	-1.046	-0.282	-0.389	0.415	0.247	0.273	-0.050	-0.284
@ Drywell Head	98135	-2.528	-0.165	0.135	0.659	-0.250	-0.109	0.071	-0.336
Opening	98104	-0.045	-0.613	0.043	0.201	1.293	-0.270	-0.011	-0.258
16 Topslab	98149	-1.568	0.291	-0.497	0.768	0.367	-0.130	0.040	0.289
@ Center	98170	-1.206	0.092	-0.100	0.786	0.979	-0.052	-0.003	0.016
	98109	-0.063	-0.453	-0.020	0.664	0.861	-0.146	-0.089	-0.060
17 Topslab	98174	-0.708	0.087	-0.211	0.775	0.777	0.155	0.163	-0.059
@ RCCV	98197	-0.151	0.028	0.169	0.426	-1.035	-0.134	-0.049	-0.663
	98103	0.198	-0.289	-0.064	-1.813	-0.298	-0.204	-0.905	-0.109

Table 3G.1-21

Results of NASTRAN Analysis, Seismic Load (Vertical: Upward Direction) (Continued)

Location	Element ID	Nx (MN/m)	Ny (MN/m)	Nxy (MN/m)	Mx (MNm/m)	My (MNm/m)	Mxy (MNm/m)	Qx (MN/m)	Qy (MN/m)
18 Wall	6	-0.370	6.048	-0.436	0.328	2.168	-0.011	0.033	0.699
Below RCCV	13	-0.499	4.721	-0.323	0.570	3.092	-0.003	0.004	0.953
Bottom	24	-0.466	5.196	0.151	0.596	3.239	-0.005	0.001	0.977
19 Wall	806	-0.054	5.223	-0.088	-0.016	0.030	0.023	-0.007	0.122
Below RCCV	813	0.109	4.681	-0.265	0.023	0.035	0.009	0.017	0.212
Mid-Height	824	0.060	5.158	0.138	0.028	-0.004	0.006	-0.001	0.221
20 Wall	1606	0.591	4.611	-0.064	-0.168	-0.903	-0.008	0.004	0.312
Below RCCV	1613	0.718	4.491	-0.181	-0.164	-0.992	-0.005	0.000	0.358
Top	1624	0.624	4.938	0.094	-0.163	-0.965	0.000	0.005	0.342
21 Exterior Wall	20011	0.614	3.372	0.346	0.042	0.022	-0.005	-0.052	-0.022
@ EL-11.50	20023	0.002	1.062	0.427	-0.109	0.222	0.007	0.092	0.140
~-10.50m	30010	0.208	1.755	-0.053	0.358	1.916	-0.014	-0.002	-0.455
	30020	0.047	0.817	0.159	-0.175	0.514	0.054	-0.114	-0.174
	40001	0.049	0.842	-0.149	-0.182	0.521	-0.053	0.112	-0.170
	40011	0.329	2.102	0.008	0.395	2.093	0.010	0.001	-0.501
22 Exterior Wall	22011	-0.175	2.678	-0.601	0.011	-0.020	0.002	0.022	-0.020
@ EL-4.65	22023	-0.004	1.366	0.333	0.114	0.002	0.013	-0.072	-0.012
~-6.60m	32010	0.012	1.481	-0.045	-0.001	-0.033	-0.002	0.000	0.007
	32020	0.040	1.571	0.054	0.052	0.002	0.007	0.047	0.007
	42001	0.049	1.634	0.032	0.067	0.004	-0.002	-0.035	0.002
	42011	0.252	1.842	0.087	0.001	-0.025	0.003	-0.002	0.004
23 Exterior Wall	24211	0.132	1.386	-0.115	0.083	0.578	-0.013	0.003	0.151
@ EL22.50	24224	0.048	1.081	-0.330	-0.020	0.047	0.060	0.054	0.030
~24.60m	34210	0.006	0.653	-0.051	-0.006	0.002	-0.001	-0.004	-0.014
	34220	-0.039	0.810	0.142	-0.038	0.021	0.005	-0.031	0.000
	44201	-0.023	0.957	0.280	-0.031	0.012	-0.013	0.037	0.001
24 Basemat	90140	-0.089	0.746	0.430	1.667	1.224	-2.812	1.354	-1.582
@ Wall	90182	0.639	0.338	0.030	-0.860	1.733	0.351	-0.170	-0.447
Below RCCV	90111	0.386	0.881	-0.046	1.649	-0.999	0.431	-0.497	-0.097
25 Slab	93140	0.061	-0.102	-0.056	-0.091	-0.107	0.070	-0.132	0.109
EL4.65m	93182	-0.101	-0.089	-0.021	-0.034	-0.119	-0.007	0.009	0.175
@ RCCV	93111	-0.058	-0.120	0.023	-0.137	-0.034	-0.005	0.160	0.003
26 Slab	96144	0.239	-0.171	-0.124	-0.056	-0.058	0.040	-0.097	0.074
EL17.5m	96186	-0.239	0.094	0.038	-0.003	-0.003	-0.005	0.006	0.053
@ RCCV	96113	0.067	-0.427	0.079	0.130	-0.033	-0.016	-0.156	-0.020
27 Slab	98472	-0.340	0.011	-0.109	-0.187	-0.285	0.207	-0.230	0.258
EL27.0m	98514	0.033	-0.090	-0.059	-0.037	-0.116	-0.023	0.000	0.171
@ RCCV	98424	0.204	-0.369	0.026	-1.935	-0.484	-0.013	1.187	0.092
28 Pool Girder	123054	-0.418	2.387	0.726	-0.048	-0.027	-0.051	0.006	0.025
@ Storage Pool	123154	-1.396	0.434	0.555	-0.071	-0.034	-0.094	-0.021	-0.007
29 Pool Girder	123062	-0.463	-0.597	-0.332	0.024	0.164	-0.031	0.000	0.088
@ Cavity	123162	1.264	-0.170	-0.195	0.073	0.060	-0.027	-0.091	-0.039
30 Pool Girder	123067	-0.498	2.664	-1.231	-0.015	0.047	0.077	0.119	0.055
@ Fuel Pool	123167	-0.680	0.639	-1.013	-0.040	-0.022	-0.012	0.032	-0.008
31 MS Tunnel	150122	0.026	-0.081	-0.251	-0.017	-0.021	-0.016	0.010	0.049
Wall and Slab	96611	0.014	-0.305	0.015	-0.044	0.160	0.065	0.071	-0.022
	98614	0.016	0.219	0.015	0.004	0.465	0.055	0.039	-0.029

Table 3G.1-22

Combined Forces and Moments: RCCV, Selected Load Combination CV-1

Location	Element ID		Nx (MN/m)	Ny (MN/m)	Nxy (MN/m)	Mx (MNm/m)	My (MNm/m)	Mxy (MNm/m)	Qx (MN/m)	Qy (MN/m)
1 RPV Pedestal Bottom	5006	OTHR	-2.178	-7.665	-0.044	0.372	2.178	0.033	-0.011	1.259
		TEMP	0.000	0.000	0.000	0.000	0.000	0.000	0.000	0.000
	5013	OTHR	-2.701	-8.068	0.048	0.310	2.375	-0.003	-0.005	1.445
		TEMP	0.000	0.000	0.000	0.000	0.000	0.000	0.000	0.000
	5024	OTHR	-2.540	-7.479	0.051	0.482	2.124	-0.010	0.011	1.239
		TEMP	0.000	0.000	0.000	0.000	0.000	0.000	0.000	0.000
2 RPV Pedestal Mid-Height	6006	OTHR	1.178	-7.403	0.008	-0.051	-0.210	0.024	0.075	-0.347
		TEMP	0.000	0.000	0.000	0.000	0.000	0.000	0.000	0.000
	6013	OTHR	0.889	-7.370	0.187	-0.205	-0.269	0.004	-0.002	-0.329
		TEMP	0.000	0.000	0.000	0.000	0.000	0.000	0.000	0.000
	6024	OTHR	1.233	-5.429	-0.514	0.296	0.070	0.015	-0.008	-0.265
		TEMP	0.000	0.000	0.000	0.000	0.000	0.000	0.000	0.000
3 RPV Pedestal Top	6606	OTHR	0.579	-6.185	0.792	0.431	2.799	0.035	0.233	-0.992
		TEMP	0.000	0.000	0.000	0.000	0.000	0.000	0.000	0.000
	6613	OTHR	0.263	-6.370	-0.098	0.292	2.826	-0.105	-0.092	-1.046
		TEMP	0.000	0.000	0.000	0.000	0.000	0.000	0.000	0.000
	6624	OTHR	0.815	-6.023	0.318	0.408	2.487	0.144	0.061	-0.804
		TEMP	0.000	0.000	0.000	0.000	0.000	0.000	0.000	0.000
4 RCCV Wetwell Bottom	1806	OTHR	0.296	-1.968	-0.046	0.371	2.208	0.018	0.010	0.784
		TEMP	0.000	0.000	0.000	0.000	0.000	0.000	0.000	0.000
	1813	OTHR	0.100	-2.368	0.194	0.364	2.330	-0.001	-0.003	0.894
		TEMP	0.000	0.000	0.000	0.000	0.000	0.000	0.000	0.000
	1824	OTHR	0.536	-2.275	0.002	0.363	2.110	0.008	-0.005	0.824
		TEMP	0.000	0.000	0.000	0.000	0.000	0.000	0.000	0.000
5 RCCV Wetwell Mid-Height	2606	OTHR	2.621	-1.496	-0.094	-0.167	-0.662	-0.001	0.008	-0.046
		TEMP	0.000	0.000	0.000	0.000	0.000	0.000	0.000	0.000
	2613	OTHR	2.292	-2.140	0.183	-0.192	-0.683	0.000	-0.007	0.013
		TEMP	0.000	0.000	0.000	0.000	0.000	0.000	0.000	0.000
	2624	OTHR	2.618	-1.810	-0.015	-0.120	-0.694	-0.003	0.004	-0.082
		TEMP	0.000	0.000	0.000	0.000	0.000	0.000	0.000	0.000
6 RCCV Wetwell Top	3406	OTHR	2.445	-0.817	0.115	-0.070	-0.222	0.069	-0.031	-0.014
		TEMP	0.000	0.000	0.000	0.000	0.000	0.000	0.000	0.000
	3413	OTHR	2.124	-1.984	0.134	-0.107	-0.259	-0.095	0.048	0.018
		TEMP	0.000	0.000	0.000	0.000	0.000	0.000	0.000	0.000
	3424	OTHR	2.104	-1.155	0.048	0.023	0.079	0.059	-0.019	-0.055
		TEMP	0.000	0.000	0.000	0.000	0.000	0.000	0.000	0.000
7 RCCV Drywell Bottom	3606	OTHR	2.398	-0.271	0.025	-0.020	0.093	0.100	0.003	0.496
		TEMP	0.000	0.000	0.000	0.000	0.000	0.000	0.000	0.000
	3613	OTHR	2.137	-1.514	0.222	-0.001	0.364	-0.080	0.001	0.698
		TEMP	0.000	0.000	0.000	0.000	0.000	0.000	0.000	0.000
	3624	OTHR	2.088	-0.764	0.040	0.112	0.557	0.059	0.011	0.562
		TEMP	0.000	0.000	0.000	0.000	0.000	0.000	0.000	0.000
8 RCCV Drywell Mid-Height	4006	OTHR	1.605	0.170	0.099	-0.086	-0.270	0.024	0.033	-0.282
		TEMP	0.000	0.000	0.000	0.000	0.000	0.000	0.000	0.000
	4013	OTHR	1.636	-1.780	0.362	-0.132	-0.409	0.009	-0.010	-0.271
		TEMP	0.000	0.000	0.000	0.000	0.000	0.000	0.000	0.000
	4976	OTHR	1.628	-0.342	-0.007	0.038	-0.013	0.001	-0.013	-0.376
		TEMP	0.000	0.000	0.000	0.000	0.000	0.000	0.000	0.000
9 RCCV Drywell Top	4406	OTHR	0.581	0.551	0.150	0.331	1.985	0.002	0.009	-0.641
		TEMP	0.000	0.000	0.000	0.000	0.000	0.000	0.000	0.000
	4413	OTHR	-0.114	-2.059	0.252	0.270	2.156	0.046	0.005	-0.797
		TEMP	0.000	0.000	0.000	0.000	0.000	0.000	0.000	0.000
	4424	OTHR	1.200	-0.082	-0.023	0.428	2.315	0.024	0.003	-0.715
		TEMP	0.000	0.000	0.000	0.000	0.000	0.000	0.000	0.000

OTHR: Loads other than thermal loads
TEMP: Thermal loads

Table 3G.1-22

Combined Forces and Moments: RCCV, Selected Load Combination CV-1 (Continued)

Location	Element ID		Nx (MN/m)	Ny (MN/m)	Nxy (MN/m)	Mx (MNm/m)	My (MNm/m)	Mxy (MNm/m)	Qx (MN/m)	Qy (MN/m)
10 Basemat @ Center	80003	OTHR	-2.857	-1.587	0.149	-0.645	-0.062	-0.045	0.163	-0.110
		TEMP	0.000	0.000	0.000	0.000	0.000	0.000	0.000	0.000
	80007	OTHR	-2.883	-1.594	0.134	-0.569	-0.040	-0.027	0.005	-0.179
		TEMP	0.000	0.000	0.000	0.000	0.000	0.000	0.000	0.000
	80012	OTHR	-2.936	-1.583	0.135	-0.563	-0.037	-0.031	-0.151	-0.018
		TEMP	0.000	0.000	0.000	0.000	0.000	0.000	0.000	0.000
11 Basemat Inside RPV Pedestal	80206	OTHR	-2.524	-1.740	0.230	-2.539	-2.324	0.705	0.962	-1.142
		TEMP	0.000	0.000	0.000	0.000	0.000	0.000	0.000	0.000
	80213	OTHR	-2.625	-1.588	0.088	-1.654	-3.090	-0.111	-0.079	-1.523
		TEMP	0.000	0.000	0.000	0.000	0.000	0.000	0.000	0.000
	80224	OTHR	-3.109	-2.000	0.060	-2.744	-1.738	-0.161	-1.212	-0.143
		TEMP	0.000	0.000	0.000	0.000	0.000	0.000	0.000	0.000
12 S/P Slab @ RPV	83306	OTHR	0.001	1.181	-0.423	-0.271	0.608	-0.065	1.933	-0.038
		TEMP	0.000	0.000	0.000	0.000	0.000	0.000	0.000	0.000
	83313	OTHR	0.198	0.926	-0.090	-0.212	0.623	0.041	1.946	0.051
		TEMP	0.000	0.000	0.000	0.000	0.000	0.000	0.000	0.000
	83324	OTHR	0.228	1.415	0.052	-0.305	0.574	-0.038	1.894	-0.055
		TEMP	0.000	0.000	0.000	0.000	0.000	0.000	0.000	0.000
13 S/P Slab @ Center	83406	OTHR	0.250	0.881	-0.316	-2.852	-0.673	-0.030	-0.134	0.003
		TEMP	0.000	0.000	0.000	0.000	0.000	0.000	0.000	0.000
	83413	OTHR	0.577	0.669	-0.018	-2.824	-0.680	-0.005	-0.124	0.002
		TEMP	0.000	0.000	0.000	0.000	0.000	0.000	0.000	0.000
	83424	OTHR	0.416	1.102	0.029	-2.793	-0.671	0.005	-0.155	0.000
		TEMP	0.000	0.000	0.000	0.000	0.000	0.000	0.000	0.000
14 S/P Slab @ RCCV	83506	OTHR	0.380	0.726	-0.243	1.282	-0.177	-0.026	-1.744	0.000
		TEMP	0.000	0.000	0.000	0.000	0.000	0.000	0.000	0.000
	83513	OTHR	0.745	0.609	0.004	1.265	-0.185	-0.005	-1.734	0.002
		TEMP	0.000	0.000	0.000	0.000	0.000	0.000	0.000	0.000
	83524	OTHR	0.482	0.996	0.030	1.389	-0.133	-0.001	-1.762	0.001
		TEMP	0.000	0.000	0.000	0.000	0.000	0.000	0.000	0.000
15 Topslab @ Drywell Head Opening	98120	OTHR	0.087	0.959	1.143	0.928	0.715	0.389	0.409	-0.810
		TEMP	0.000	0.000	0.000	0.000	0.000	0.000	0.000	0.000
	98135	OTHR	-0.770	-0.415	-0.496	0.769	-0.198	0.170	0.167	-1.201
		TEMP	0.000	0.000	0.000	0.000	0.000	0.000	0.000	0.000
	98104	OTHR	-0.243	2.469	-0.772	0.812	2.645	-0.300	-0.482	-0.706
		TEMP	0.000	0.000	0.000	0.000	0.000	0.000	0.000	0.000
16 Topslab @ Center	98149	OTHR	-0.098	1.443	-0.477	0.347	0.110	0.268	0.076	0.368
		TEMP	0.000	0.000	0.000	0.000	0.000	0.000	0.000	0.000
	98170	OTHR	0.004	0.880	-0.384	0.610	0.618	-0.030	-0.054	-0.129
		TEMP	0.000	0.000	0.000	0.000	0.000	0.000	0.000	0.000
	98109	OTHR	0.356	1.566	-0.142	0.995	1.912	-0.221	-0.050	-0.266
		TEMP	0.000	0.000	0.000	0.000	0.000	0.000	0.000	0.000
17 Topslab @ RCCV	98174	OTHR	0.671	1.195	-0.122	0.081	0.267	0.473	0.200	-0.198
		TEMP	0.000	0.000	0.000	0.000	0.000	0.000	0.000	0.000
	98197	OTHR	0.312	1.220	-0.231	-0.173	-1.590	-0.120	-0.070	-1.105
		TEMP	0.000	0.000	0.000	0.000	0.000	0.000	0.000	0.000
	98103	OTHR	0.665	1.699	-0.091	-0.975	0.423	-0.331	-0.898	-0.215
		TEMP	0.000	0.000	0.000	0.000	0.000	0.000	0.000	0.000

Table 3G.1-23

Combined Forces and Moments: RCCV, Selected Load Combination CV-7a

Location	Element ID		Nx (MN/m)	Ny (MN/m)	Nxy (MN/m)	Mx (MNm/m)	My (MNm/m)	Mxy (MNm/m)	Qx (MN/m)	Qy (MN/m)
1 RPV Pedestal Bottom	5006	OTHR	-2.287	-7.803	-0.046	0.409	2.405	0.034	-0.011	1.359
		TEMP	-3.476	1.649	-0.329	-6.696	-6.462	-0.046	0.105	1.012
		HYDR	1.879	5.303	0.129	0.382	2.323	0.017	0.024	1.086
	5013	OTHR	-2.812	-8.194	0.042	0.347	2.600	-0.003	-0.005	1.546
		TEMP	-3.121	1.796	-0.097	-6.854	-6.851	-0.006	0.027	0.925
		HYDR	2.099	5.570	0.515	0.426	2.519	0.001	0.018	1.220
	5024	OTHR	-2.648	-7.584	0.053	0.521	2.336	-0.011	0.012	1.331
		TEMP	-3.419	1.892	-0.003	-6.894	-6.129	-0.026	-0.036	1.045
		HYDR	2.282	5.413	0.243	0.434	2.450	0.013	0.024	1.195
2 RPV Pedestal Mid-Height	6006	OTHR	1.306	-7.535	-0.005	-0.056	-0.228	0.023	0.076	-0.362
		TEMP	0.080	1.775	0.154	-6.175	-4.043	0.264	0.065	-1.515
		HYDR	0.446	5.872	0.309	0.056	0.390	0.033	0.047	0.082
	6013	OTHR	1.017	-7.496	0.181	-0.209	-0.288	0.004	-0.002	-0.344
		TEMP	-0.061	1.444	-0.177	-6.419	-3.904	-0.057	-0.026	-1.669
		HYDR	0.466	5.457	0.487	0.105	0.375	0.012	0.016	0.079
	6024	OTHR	1.379	-5.512	-0.524	0.299	0.059	0.015	-0.010	-0.271
		TEMP	-0.245	2.050	0.059	-7.408	-2.297	-0.304	-0.003	-1.547
		HYDR	0.457	4.341	0.599	0.078	0.360	0.027	0.026	0.028
3 RPV Pedestal Top	6606	OTHR	0.647	-6.317	0.792	0.426	2.771	0.028	0.237	-0.968
		TEMP	20.997	2.192	0.564	-6.643	-5.510	-0.035	-1.941	0.870
		HYDR	0.816	5.248	0.908	0.710	4.278	0.198	0.644	1.214
	6613	OTHR	0.323	-6.514	-0.107	0.288	2.811	-0.098	-0.098	-1.028
		TEMP	21.088	1.964	-0.425	-6.702	-5.546	0.139	2.063	0.862
		HYDR	0.797	4.919	0.398	0.627	4.016	0.173	0.420	1.197
	6624	OTHR	0.876	-6.161	0.319	0.402	2.455	0.137	0.067	-0.779
		TEMP	21.900	2.601	0.228	-6.671	-5.665	0.005	-2.338	1.055
		HYDR	0.728	5.071	0.435	0.617	3.907	0.196	0.555	1.147
4 RCCV Wetwell Bottom	1806	OTHR	0.322	-1.857	-0.072	0.383	2.280	0.018	0.011	0.800
		TEMP	2.533	0.468	-0.194	-4.438	-8.138	0.077	0.083	-1.750
		HYDR	0.961	1.171	0.676	0.558	3.366	0.014	0.008	1.396
	1813	OTHR	0.127	-2.285	0.197	0.376	2.404	-0.001	-0.003	0.913
		TEMP	1.866	-2.167	-0.420	-4.274	-7.773	-0.025	-0.007	-1.523
		HYDR	0.921	1.191	0.607	0.561	3.342	0.011	0.005	1.422
	1824	OTHR	0.560	-2.123	0.005	0.375	2.182	0.008	-0.005	0.842
		TEMP	2.926	-2.481	0.046	-4.432	-8.134	0.020	-0.085	-1.667
		HYDR	1.036	0.822	0.573	0.563	3.392	0.013	0.010	1.440
5 RCCV Wetwell Mid-Height	2606	OTHR	2.697	-1.395	-0.128	-0.168	-0.660	-0.001	0.008	-0.041
		TEMP	1.379	0.586	-0.171	-3.308	-1.033	0.018	0.039	0.074
		HYDR	1.233	0.863	0.779	0.072	0.415	0.034	0.005	0.255
	2613	OTHR	2.356	-2.073	0.187	-0.193	-0.684	0.000	-0.007	0.021
		TEMP	0.111	-2.544	-0.109	-3.090	-1.052	0.009	-0.075	0.370
		HYDR	1.197	0.898	0.639	0.061	0.325	0.032	0.014	0.207
	2624	OTHR	2.683	-1.650	-0.014	-0.119	-0.695	-0.003	0.004	-0.080
		TEMP	0.965	-2.909	-0.087	-3.293	-0.935	-0.026	0.067	0.189
		HYDR	1.396	0.751	0.518	0.094	0.326	0.008	0.009	0.195
6 RCCV Wetwell Top	3406	OTHR	2.583	-0.732	0.088	-0.093	-0.366	0.101	-0.058	0.034
		TEMP	11.723	1.461	0.327	-4.151	-8.468	-0.227	0.461	3.349
		HYDR	0.925	0.689	0.833	0.140	0.541	0.198	0.231	0.288
	3413	OTHR	2.211	-1.923	0.125	-0.120	-0.331	-0.124	0.067	0.045
		TEMP	8.032	-3.439	0.044	-4.382	-9.151	-0.402	0.538	3.335
		HYDR	0.721	0.752	0.525	0.073	0.374	0.097	0.102	0.243
	3424	OTHR	2.198	-0.989	0.068	0.007	-0.016	0.095	-0.041	-0.022
		TEMP	10.292	-4.166	0.471	-3.681	-5.045	-0.039	-0.006	2.165
		HYDR	0.751	0.626	0.408	0.032	0.340	0.055	0.081	0.216

OTHR: Loads other than thermal and hydrodyanamic loads
TEMP: Thermal loads
HYDR: Hydrodyanmic loads

Table 3G.1-23

Combined Forces and Moments: RCCV, Selected Load Combination CV-7a (Continued)

Location	Element ID		Nx (MN/m)	Ny (MN/m)	Nxy (MN/m)	Mx (MNm/m)	My (MNm/m)	Mxy (MNm/m)	Qx (MN/m)	Qy (MN/m)
7 RCCV Drywell Bottom	3606	OTHR	2.537	-0.105	0.004	-0.012	0.119	0.132	-0.010	0.531
		TEMP	8.504	1.377	0.674	-5.342	-9.036	0.607	0.534	-1.980
		HYDR	0.961	0.714	0.535	0.125	0.496	0.056	0.221	0.186
	3613	OTHR	2.228	-1.361	0.209	0.013	0.461	-0.112	0.005	0.768
		TEMP	4.607	-4.161	1.005	-4.955	-6.227	-0.363	0.317	-0.820
		HYDR	0.665	0.611	0.213	0.107	0.486	0.119	0.106	0.166
	3624	OTHR	2.197	-0.462	0.056	0.126	0.630	0.096	0.007	0.611
		TEMP	-4.291	-6.043	0.252	-0.934	-2.498	0.068	0.000	0.351
		HYDR	0.597	0.407	0.433	0.100	0.456	0.040	0.074	0.135
8 RCCV Drywell Mid-Height	4006	OTHR	1.673	0.298	0.077	-0.061	-0.208	0.030	0.034	-0.338
		TEMP	5.952	2.178	0.212	-5.110	-5.057	0.011	-0.126	-0.683
		HYDR	0.956	0.591	0.256	0.050	0.486	0.032	0.165	0.156
	4013	OTHR	1.716	-1.596	0.362	-0.143	-0.411	0.010	-0.011	-0.283
		TEMP	4.287	-5.850	1.041	-4.672	-4.289	0.014	-0.132	-0.308
		HYDR	0.706	0.748	0.111	0.058	0.105	0.052	0.061	0.119
	4976	OTHR	1.740	-0.073	-0.025	0.044	0.006	0.001	-0.014	-0.409
		TEMP	-2.660	-5.335	0.580	-0.954	-1.780	0.003	0.013	-0.584
		HYDR	0.283	0.329	0.312	0.043	0.045	0.019	0.008	0.096
9 RCCV Drywell Top	4406	OTHR	0.629	0.603	0.169	0.405	2.385	0.017	0.013	-0.737
		TEMP	6.433	1.711	-0.232	-4.475	-3.816	0.299	0.087	-0.150
		HYDR	0.301	0.362	0.066	0.108	0.442	0.083	0.088	0.339
	4413	OTHR	0.017	-1.850	0.263	0.286	2.323	0.050	0.008	-0.850
		TEMP	0.711	-6.632	-0.292	-4.753	-4.467	0.253	-0.243	0.643
		HYDR	0.754	0.888	0.339	0.335	0.363	0.254	0.118	0.389
	4424	OTHR	1.321	0.141	-0.039	0.466	2.527	0.026	0.002	-0.774
		TEMP	-5.846	-4.171	0.767	-0.363	1.129	-0.024	-0.022	-1.462
		HYDR	0.183	0.262	0.219	0.052	0.309	0.004	0.007	0.128
10 Basemat @ Center	80003	OTHR	-2.778	-1.498	0.148	-1.154	-0.552	-0.045	0.150	-0.101
		TEMP	-4.270	-5.140	0.021	-8.130	-8.102	-0.039	0.029	-0.008
		HYDR	1.283	1.173	0.112	4.575	4.159	0.065	0.277	0.266
	80007	OTHR	-2.803	-1.505	0.133	-1.078	-0.530	-0.027	0.007	-0.163
		TEMP	-4.296	-5.104	0.056	-8.096	-8.099	-0.037	0.028	-0.009
		HYDR	1.280	1.155	0.094	4.490	4.145	0.068	0.228	0.317
	80012	OTHR	-2.856	-1.493	0.134	-1.072	-0.527	-0.031	-0.136	-0.016
		TEMP	-4.302	-5.040	0.042	-8.079	-8.109	-0.032	0.024	-0.001
		HYDR	1.250	1.127	0.072	4.442	4.108	0.058	0.351	0.201
11 Basemat Inside RPV Pedestal	80206	OTHR	-2.442	-1.655	0.230	-2.898	-2.684	0.661	0.928	-1.116
		TEMP	-4.260	-5.523	0.137	-8.575	-8.460	0.003	0.005	-0.035
		HYDR	1.472	1.255	0.219	6.569	5.991	0.976	0.802	0.838
	80213	OTHR	-2.542	-1.498	0.084	-2.063	-3.401	-0.108	-0.079	-1.479
		TEMP	-4.445	-5.127	0.161	-8.289	-8.565	-0.151	-0.018	-0.103
		HYDR	1.362	1.183	0.128	5.525	6.846	0.593	0.475	1.091
	80224	OTHR	-3.024	-1.917	0.059	-3.067	-2.134	-0.157	-1.163	-0.142
		TEMP	-4.372	-4.948	0.081	-8.177	-8.193	-0.045	-0.038	0.010
		HYDR	1.226	0.902	0.114	6.560	5.212	0.461	1.049	0.380

Table 3G.1-23

Combined Forces and Moments: RCCV, Selected Load Combination CV-7a (Continued)

Location	Element ID		Nx (MN/m)	Ny (MN/m)	Nxy (MN/m)	Mx (MNm/m)	My (MNm/m)	Mxy (MNm/m)	Qx (MN/m)	Qy (MN/m)
12 S/P Slab @ RPV	83306	OTHR	-0.025	1.218	-0.421	-0.381	0.552	-0.067	1.915	-0.037
		TEMP	-10.607	10.981	0.454	-4.700	-2.770	0.032	-0.288	0.000
		HYDR	1.543	1.102	0.524	1.382	0.906	0.093	2.882	0.066
	83313	OTHR	0.167	0.963	-0.090	-0.322	0.566	0.042	1.928	0.051
		TEMP	-10.822	11.242	-0.850	-4.737	-2.848	-0.039	-0.302	-0.028
		HYDR	1.473	1.129	0.322	1.340	0.825	0.152	2.839	0.054
	83324	OTHR	0.205	1.447	0.051	-0.420	0.516	-0.038	1.874	-0.056
		TEMP	-10.702	11.862	1.279	-4.487	-2.654	0.006	-0.156	0.046
		HYDR	1.528	1.190	0.345	1.265	0.729	0.108	2.762	0.063
13 S/P Slab @ Center	83406	OTHR	0.240	0.901	-0.312	-2.866	-0.718	-0.032	-0.162	0.003
		TEMP	-6.490	4.881	-0.530	-3.815	-3.181	-0.001	-0.306	0.016
		HYDR	1.511	1.103	0.306	4.347	1.357	0.069	0.408	0.004
	83413	OTHR	0.565	0.691	-0.019	-2.838	-0.725	-0.004	-0.152	0.002
		TEMP	-6.986	5.307	0.315	-3.900	-3.257	-0.015	-0.278	-0.011
		HYDR	1.444	1.138	0.180	4.326	1.324	0.080	0.394	0.004
	83424	OTHR	0.410	1.115	0.029	-2.807	-0.716	0.005	-0.184	0.000
		TEMP	-6.630	5.823	0.078	-3.895	-3.148	-0.003	-0.210	0.009
		HYDR	1.507	1.226	0.182	4.294	1.302	0.068	0.386	0.004
14 S/P Slab @ RCCV	83506	OTHR	0.376	0.740	-0.238	1.382	-0.183	-0.026	-1.782	-0.001
		TEMP	-3.948	2.320	-0.446	-2.906	-3.131	-0.038	-0.275	0.016
		HYDR	1.408	1.094	0.225	2.419	0.376	0.023	2.689	0.014
	83513	OTHR	0.740	0.628	0.003	1.364	-0.190	-0.005	-1.771	0.002
		TEMP	-4.567	2.419	0.440	-3.190	-3.174	-0.008	-0.192	-0.001
		HYDR	1.347	1.138	0.178	2.366	0.364	0.023	2.683	0.010
	83524	OTHR	0.480	1.002	0.030	1.493	-0.135	-0.001	-1.801	0.001
		TEMP	-4.038	3.201	-0.017	-3.278	-3.153	0.013	-0.168	-0.005
		HYDR	1.417	1.245	0.172	2.365	0.340	0.020	2.677	0.010
15 Topslab @ Drywell Head Opening	98120	OTHR	0.055	1.006	1.223	1.048	0.810	0.451	0.439	-0.886
		TEMP	-7.068	-4.258	-0.770	0.956	0.732	2.765	-0.161	-0.002
		HYDR	0.343	0.110	0.142	0.073	0.106	0.053	0.013	0.028
	98135	OTHR	-0.896	-0.445	-0.543	0.896	-0.228	0.171	0.188	-1.324
		TEMP	-8.729	-5.283	0.235	3.147	-2.057	-1.132	0.380	-0.267
		HYDR	0.547	0.079	0.114	0.098	0.030	0.024	0.007	0.012
	98104	OTHR	-0.260	2.515	-0.837	0.891	2.941	-0.344	-0.523	-0.787
		TEMP	-4.999	-1.752	0.585	-1.461	3.712	-1.500	0.185	-0.214
		HYDR	0.101	0.422	0.164	0.030	0.178	0.039	0.008	0.065
16 Topslab @ Center	98149	OTHR	-0.143	1.753	-0.555	0.497	0.259	0.291	0.075	0.329
		TEMP	-6.075	-2.540	-1.137	2.229	2.310	0.496	0.037	0.048
		HYDR	0.506	0.266	0.055	0.068	0.053	0.037	0.023	0.029
	98170	OTHR	0.015	1.233	-0.449	0.735	0.818	-0.036	-0.026	-0.063
		TEMP	-5.510	-3.566	-1.042	2.141	2.864	-0.042	0.030	0.389
		HYDR	0.367	0.263	0.176	0.052	0.074	0.017	0.007	0.007
	98109	OTHR	0.404	1.649	-0.158	1.143	2.125	-0.248	-0.058	-0.289
		TEMP	-6.256	-0.887	0.773	1.219	2.564	-0.119	0.329	-0.005
		HYDR	0.065	0.222	0.272	0.041	0.120	0.037	0.007	0.019
17 Topslab @ RCCV	98174	OTHR	0.775	1.504	-0.146	0.258	0.459	0.506	0.221	-0.153
		TEMP	-4.871	-2.689	-0.476	2.352	3.211	0.255	-0.023	0.434
		HYDR	0.430	0.275	0.097	0.162	0.179	0.117	0.059	0.053
	98197	OTHR	0.479	1.612	-0.231	-0.168	-1.929	-0.140	-0.072	-1.169
		TEMP	-7.584	-2.926	-1.360	1.917	3.110	0.130	0.154	-0.447
		HYDR	0.602	0.383	0.154	0.104	0.187	0.049	0.023	0.052
	98103	OTHR	0.750	1.850	-0.098	-1.204	0.430	-0.373	-1.049	-0.241
		TEMP	-6.577	-2.458	-0.070	3.431	3.308	0.118	0.450	0.084
		HYDR	0.085	0.251	0.323	0.127	0.113	0.021	0.033	0.002

Table 3G.1-24

Combined Forces and Moments: RCCV, Selected Load Combination CV-7b

Location	Element ID		Nx (MN/m)	Ny (MN/m)	Nxy (MN/m)	Mx (MNm/m)	My (MNm/m)	Mxy (MNm/m)	Qx (MN/m)	Qy (MN/m)
1 RPV Pedestal Bottom	5006	OTHR	-2.643	-8.287	-0.049	0.527	3.110	0.037	-0.012	1.672
		TEMP	-12.849	0.250	-0.523	-16.011	-12.625	-0.093	0.227	4.158
		HYDR	1.386	3.966	0.120	0.281	1.716	0.012	0.017	0.800
	5013	OTHR	-3.176	-8.631	0.033	0.462	3.296	-0.003	-0.005	1.862
		TEMP	-12.356	0.343	-0.104	-16.288	-13.239	-0.007	0.021	4.062
		HYDR	1.546	4.064	0.486	0.313	1.855	0.001	0.012	0.897
	5024	OTHR	-3.003	-7.940	0.059	0.643	2.998	-0.015	0.014	1.621
		TEMP	-12.862	0.231	0.003	-16.285	-11.829	-0.073	-0.054	4.265
		HYDR	1.685	3.975	0.243	0.322	1.818	0.009	0.017	0.885
2 RPV Pedestal Mid-Height	6006	OTHR	1.628	-8.011	-0.037	-0.071	-0.293	0.022	0.080	-0.407
		TEMP	-2.408	0.615	0.443	-16.093	-14.923	0.436	0.146	-1.774
		HYDR	0.355	4.530	0.223	0.040	0.318	0.025	0.036	0.059
	6013	OTHR	1.327	-7.936	0.172	-0.225	-0.356	0.003	-0.001	-0.389
		TEMP	-2.624	0.212	-0.206	-16.582	-14.795	-0.048	-0.033	-2.015
		HYDR	0.348	4.059	0.457	0.077	0.290	0.008	0.011	0.058
	6024	OTHR	1.738	-5.780	-0.553	0.307	0.016	0.015	-0.013	-0.292
		TEMP	-2.728	0.667	0.076	-18.533	-11.361	-0.661	0.020	-1.697
		HYDR	0.347	3.315	0.485	0.055	0.280	0.022	0.018	0.024
3 RPV Pedestal Top	6606	OTHR	0.859	-6.851	0.808	0.482	3.124	0.014	0.276	-1.019
		TEMP	8.837	0.682	0.577	-16.163	-12.297	0.057	-1.395	-2.012
		HYDR	0.734	3.973	0.751	0.565	3.241	0.197	0.624	0.881
	6613	OTHR	0.507	-7.063	-0.123	0.339	3.181	-0.088	-0.130	-1.088
		TEMP	9.213	0.732	-0.359	-16.199	-12.536	0.030	1.518	-1.952
		HYDR	0.698	3.604	0.413	0.487	2.967	0.148	0.400	0.865
	6624	OTHR	1.087	-6.649	0.320	0.458	2.794	0.127	0.098	-0.825
		TEMP	9.545	0.848	0.253	-16.174	-12.377	0.066	-1.768	-1.800
		HYDR	0.656	3.799	0.358	0.487	2.933	0.184	0.530	0.838
4 RCCV Wetwell Bottom	1806	OTHR	0.593	-1.111	-0.117	0.494	2.945	0.018	0.011	1.019
		TEMP	-1.533	-1.021	-0.228	-10.248	-14.646	0.090	0.096	-1.555
		HYDR	0.744	0.794	0.484	0.391	2.348	0.010	0.006	0.984
	1813	OTHR	0.387	-1.645	0.191	0.486	3.073	-0.002	-0.003	1.141
		TEMP	-2.037	-4.249	-0.394	-10.039	-14.121	-0.043	-0.006	-1.254
		HYDR	0.721	0.812	0.419	0.394	2.340	0.009	0.005	0.997
	1824	OTHR	0.855	-1.366	0.010	0.483	2.827	0.009	-0.005	1.063
		TEMP	-1.011	-4.103	0.136	-10.224	-14.384	0.028	-0.105	-1.321
		HYDR	0.813	0.553	0.410	0.403	2.410	0.011	0.009	1.025
5 RCCV Wetwell Mid-Height	2606	OTHR	3.471	-0.643	-0.184	-0.214	-0.854	-0.001	0.009	-0.035
		TEMP	-4.269	-1.249	-0.234	-9.962	-7.559	0.001	0.044	0.117
		HYDR	0.909	0.588	0.546	0.055	0.314	0.023	0.003	0.189
	2613	OTHR	3.063	-1.473	0.184	-0.239	-0.866	-0.001	-0.008	0.030
		TEMP	-5.197	-5.323	-0.038	-9.725	-7.432	-0.015	-0.093	0.418
		HYDR	0.872	0.617	0.438	0.046	0.247	0.021	0.010	0.154
	2624	OTHR	3.435	-0.919	-0.018	-0.154	-0.885	-0.004	0.005	-0.090
		TEMP	-4.923	-4.754	-0.111	-10.020	-7.637	-0.043	0.078	0.194
		HYDR	1.010	0.508	0.363	0.067	0.252	0.006	0.007	0.149
6 RCCV Wetwell Top	3406	OTHR	3.219	0.028	0.033	-0.093	-0.342	0.079	-0.041	0.008
		TEMP	5.196	-0.343	0.501	-10.839	-14.129	0.028	0.144	2.477
		HYDR	0.656	0.480	0.585	0.102	0.399	0.139	0.162	0.204
	3413	OTHR	2.758	-1.348	0.142	-0.128	-0.275	-0.099	0.054	0.009
		TEMP	3.430	-7.154	0.362	-10.781	-14.124	-0.109	0.133	2.640
		HYDR	0.505	0.527	0.365	0.052	0.272	0.071	0.073	0.167
	3424	OTHR	2.729	-0.248	0.054	0.037	0.161	0.069	-0.027	-0.095
		TEMP	2.843	-6.398	0.484	-9.990	-9.736	0.045	-0.108	0.896
		HYDR	0.515	0.430	0.287	0.022	0.227	0.039	0.057	0.148

Table 3G.1-24

Combined Forces and Moments: RCCV, Selected Load Combination CV-7b (Continued)

Location	Element ID		Nx (MN/m)	Ny (MN/m)	Nxy (MN/m)	Mx (MNm/m)	My (MNm/m)	Mxy (MNm/m)	Qx (MN/m)	Qy (MN/m)
7 RCCV Drywell Bottom	3606	OTHR	3.117	0.581	-0.061	-0.022	0.067	0.118	-0.004	0.591
		TEMP	0.851	-0.258	0.079	-12.665	-14.960	0.282	0.179	-0.838
		HYDR	0.686	0.499	0.370	0.087	0.343	0.037	0.156	0.129
	3613	OTHR	2.733	-0.859	0.248	-0.016	0.404	-0.083	0.005	0.845
		TEMP	-0.941	-8.499	1.390	-12.337	-13.241	-0.243	0.024	-0.345
		HYDR	0.472	0.428	0.150	0.074	0.339	0.084	0.076	0.116
	3624	OTHR	2.713	0.258	0.023	0.119	0.592	0.069	0.009	0.680
		TEMP	-10.577	-8.035	0.298	-7.210	-6.858	0.089	-0.061	1.477
		HYDR	0.410	0.275	0.305	0.071	0.324	0.028	0.052	0.095
8 RCCV Drywell Mid-Height	4006	OTHR	1.969	0.955	0.059	-0.036	-0.180	0.041	0.032	-0.456
		TEMP	1.893	0.841	-0.323	-12.242	-12.219	0.193	-0.154	-0.810
		HYDR	0.681	0.411	0.172	0.035	0.337	0.023	0.117	0.109
	4013	OTHR	2.004	-1.149	0.388	-0.166	-0.422	0.010	-0.011	-0.388
		TEMP	1.197	-10.529	1.292	-12.197	-11.585	0.046	-0.165	-0.457
		HYDR	0.500	0.530	0.072	0.039	0.071	0.037	0.044	0.082
	4976	OTHR	2.136	0.576	-0.065	0.049	0.039	0.002	-0.015	-0.530
		TEMP	-7.092	-6.953	0.638	-7.681	-8.655	0.012	0.039	-0.305
		HYDR	0.194	0.228	0.217	0.029	0.033	0.013	0.006	0.069
9 RCCV Drywell Top	4406	OTHR	0.682	1.212	0.232	0.571	3.241	0.028	0.017	-0.997
		TEMP	6.726	0.270	-1.390	-11.635	-9.864	0.510	0.460	-0.602
		HYDR	0.216	0.252	0.050	0.075	0.309	0.059	0.062	0.235
	4413	OTHR	0.071	-1.461	0.289	0.395	3.060	0.058	0.010	-1.085
		TEMP	-0.989	-11.897	-0.372	-12.126	-10.994	0.411	-0.180	0.175
		HYDR	0.515	0.626	0.245	0.237	0.250	0.181	0.084	0.270
	4424	OTHR	1.588	0.692	-0.074	0.577	3.179	0.029	0.002	-0.965
		TEMP	-10.172	-5.565	0.973	-7.107	-5.872	-0.070	-0.009	-1.761
		HYDR	0.128	0.188	0.151	0.037	0.220	0.003	0.005	0.087
10 Basemat @ Center	80003	OTHR	-2.525	-1.217	0.146	-2.743	-2.077	-0.042	0.118	-0.074
		TEMP	-1.587	-2.420	-0.001	-8.464	-8.777	-0.040	0.022	-0.010
		HYDR	0.927	0.853	0.083	3.426	3.125	0.057	0.241	0.224
	80007	OTHR	-2.546	-1.223	0.131	-2.664	-2.054	-0.023	0.014	-0.120
		TEMP	-1.600	-2.375	0.039	-8.444	-8.779	-0.040	0.014	-0.014
		HYDR	0.925	0.836	0.072	3.359	3.115	0.061	0.210	0.259
	80012	OTHR	-2.601	-1.209	0.133	-2.658	-2.050	-0.027	-0.091	-0.010
		TEMP	-1.607	-2.298	0.028	-8.433	-8.799	-0.031	0.005	0.001
		HYDR	0.901	0.812	0.055	3.323	3.083	0.048	0.293	0.182
11 Basemat Inside RPV Pedestal	80206	OTHR	-2.177	-1.386	0.232	-4.091	-3.863	0.546	0.838	-1.051
		TEMP	-1.604	-2.924	0.120	-8.962	-9.256	0.034	-0.007	-0.049
		HYDR	1.081	0.938	0.151	4.965	4.512	0.804	0.639	0.640
	80213	OTHR	-2.274	-1.211	0.075	-3.377	-4.445	-0.092	-0.071	-1.360
		TEMP	-1.721	-2.346	0.088	-8.685	-9.343	-0.166	-0.026	-0.164
		HYDR	0.989	0.860	0.085	4.109	5.137	0.558	0.450	0.810
	80224	OTHR	-2.756	-1.657	0.054	-4.130	-3.404	-0.146	-1.026	-0.139
		TEMP	-1.574	-2.175	0.061	-8.644	-8.932	-0.052	-0.105	0.019
		HYDR	0.883	0.637	0.082	4.962	3.893	0.423	0.799	0.352

Table 3G.1-24

Combined Forces and Moments: RCCV, Selected Load Combination CV-7b (Continued)

Location	Element ID		Nx (MN/m)	Ny (MN/m)	Nxy (MN/m)	Mx (MNm/m)	My (MNm/m)	Mxy (MNm/m)	Qx (MN/m)	Qy (MN/m)
12 S/P Slab @ RPV	83306	OTHR	0.066	1.476	-0.440	-0.755	0.507	-0.071	2.241	-0.042
		TEMP	-11.672	3.835	0.218	-9.639	-8.194	0.035	-0.073	-0.040
		HYDR	1.298	0.806	0.476	1.029	0.690	0.081	2.027	0.049
	83313	OTHR	0.261	1.206	-0.082	-0.687	0.522	0.042	2.256	0.058
		TEMP	-11.910	4.316	-0.426	-9.668	-8.271	-0.025	-0.075	0.011
		HYDR	1.213	0.820	0.328	1.005	0.623	0.139	1.996	0.041
	83324	OTHR	0.293	1.710	0.048	-0.791	0.470	-0.037	2.200	-0.062
		TEMP	-11.696	4.693	0.966	-9.530	-8.130	-0.002	0.004	0.007
		HYDR	1.256	0.871	0.342	0.951	0.560	0.098	1.945	0.048
13 S/P Slab @ Center	83406	OTHR	0.383	1.111	-0.320	-3.467	-0.976	-0.036	-0.269	0.003
		TEMP	-8.140	-0.574	-0.507	-9.101	-8.502	0.000	-0.107	0.016
		HYDR	1.234	0.820	0.265	3.030	0.974	0.060	0.303	0.004
	83413	OTHR	0.722	0.895	-0.019	-3.437	-0.984	-0.005	-0.257	0.002
		TEMP	-8.751	0.109	0.485	-9.199	-8.591	-0.012	-0.069	-0.008
		HYDR	1.150	0.845	0.178	3.015	0.946	0.074	0.292	0.004
	83424	OTHR	0.551	1.334	0.031	-3.408	-0.972	0.006	-0.291	0.000
		TEMP	-8.209	0.422	0.013	-9.166	-8.499	0.001	-0.043	0.006
		HYDR	1.203	0.917	0.178	2.995	0.931	0.063	0.287	0.004
14 S/P Slab @ RCCV	83506	OTHR	0.535	0.930	-0.240	1.912	-0.230	-0.028	-2.228	-0.002
		TEMP	-6.270	-2.431	-0.382	-8.852	-8.637	-0.050	-0.135	0.021
		HYDR	1.115	0.816	0.196	1.745	0.260	0.020	1.878	0.011
	83513	OTHR	0.917	0.823	0.002	1.894	-0.239	-0.005	-2.217	0.002
		TEMP	-7.033	-2.078	0.612	-9.208	-8.687	-0.011	-0.022	0.001
		HYDR	1.042	0.850	0.169	1.702	0.249	0.023	1.873	0.009
	83524	OTHR	0.640	1.206	0.030	2.024	-0.179	0.000	-2.248	0.002
		TEMP	-6.237	-1.445	-0.080	-9.171	-8.643	0.017	-0.039	-0.005
		HYDR	1.097	0.937	0.164	1.708	0.232	0.020	1.870	0.009
15 Topslab @ Drywell Head Opening	98120	OTHR	-0.174	1.161	1.386	1.355	1.029	0.604	0.519	-1.132
		TEMP	-11.465	-10.588	-5.034	7.058	5.009	5.155	-1.417	-1.082
		HYDR	0.239	0.081	0.101	0.050	0.074	0.036	0.009	0.019
	98135	OTHR	-1.658	-0.577	-0.621	1.224	-0.327	0.182	0.241	-1.668
		TEMP	-16.071	-6.982	2.437	10.528	-0.434	-1.821	1.058	-1.141
		HYDR	0.374	0.055	0.078	0.068	0.021	0.017	0.005	0.009
	98104	OTHR	-0.325	2.935	-0.997	1.120	3.833	-0.475	-0.633	-1.003
		TEMP	-6.701	-12.118	2.879	2.391	11.786	-3.140	0.876	-0.611
		HYDR	0.069	0.289	0.113	0.021	0.123	0.026	0.005	0.047
16 Topslab @ Center	98149	OTHR	-0.535	2.166	-0.780	0.754	0.370	0.326	0.103	0.475
		TEMP	-11.277	-3.014	-1.862	5.796	8.885	0.958	0.550	-1.906
		HYDR	0.350	0.186	0.040	0.047	0.037	0.026	0.016	0.020
	98170	OTHR	-0.258	1.449	-0.554	1.052	1.190	-0.057	-0.039	-0.088
		TEMP	-9.611	-4.561	-0.870	4.301	5.407	-0.101	-0.114	0.048
		HYDR	0.252	0.185	0.120	0.035	0.051	0.012	0.005	0.005
	98109	OTHR	0.469	1.900	-0.189	1.518	2.752	-0.332	-0.091	-0.362
		TEMP	-7.853	-1.643	0.877	9.057	11.508	-0.324	0.767	0.077
		HYDR	0.042	0.153	0.192	0.028	0.083	0.027	0.005	0.013
17 Topslab @ RCCV	98174	OTHR	0.758	1.828	-0.220	0.445	0.689	0.662	0.308	-0.214
		TEMP	-9.261	-3.967	-1.472	5.055	6.597	0.112	-0.062	0.291
		HYDR	0.298	0.192	0.069	0.113	0.126	0.079	0.041	0.038
	98197	OTHR	0.491	1.889	-0.243	-0.128	-2.550	-0.201	-0.099	-1.580
		TEMP	-11.733	-4.685	-1.499	4.215	6.202	0.220	0.358	-0.438
		HYDR	0.414	0.266	0.108	0.072	0.133	0.034	0.017	0.035
	98103	OTHR	0.944	2.161	-0.129	-1.843	0.460	-0.493	-1.457	-0.314
		TEMP	-7.870	-5.563	-0.327	12.878	12.662	0.251	0.583	0.155
		HYDR	0.056	0.174	0.229	0.090	0.079	0.016	0.023	0.001

Table 3G.1-25

Combined Forces and Moments: RCCV, Selected Load Combination CV-11a

Location	Element ID		Nx (MN/m)	Ny (MN/m)	Nxy (MN/m)	Mx (MNm/m)	My (MNm/m)	Mxy (MNm/m)	Qx (MN/m)	Qy (MN/m)
1 RPV Pedestal Bottom	5006	OTHR	-1.739	-7.073	-0.039	0.226	1.305	0.029	-0.010	0.873
		TEMP	-3.476	1.649	-0.329	-6.696	-6.462	-0.046	0.105	1.012
		SEIS	5.298	9.209	2.533	1.297	7.221	0.131	0.298	3.152
		HYDR	1.333	3.785	0.094	0.270	1.646	0.012	0.017	0.770
	5013	OTHR	-2.253	-7.531	0.061	0.168	1.513	-0.002	-0.005	1.054
		TEMP	-3.121	1.796	-0.097	-6.854	-6.851	-0.006	0.027	0.925
		SEIS	5.606	13.008	1.616	1.531	7.718	0.056	0.200	3.420
		HYDR	1.490	3.953	0.386	0.302	1.787	0.001	0.012	0.866
	5024	OTHR	-2.104	-7.043	0.044	0.331	1.307	-0.006	0.008	0.881
		TEMP	-3.419	1.892	-0.003	-6.894	-6.129	-0.026	-0.036	1.045
		SEIS	3.003	8.339	3.354	0.757	3.064	0.027	0.299	1.464
		HYDR	1.625	3.854	0.189	0.309	1.745	0.009	0.017	0.851
2 RPV Pedestal Mid-Height	6006	OTHR	0.768	-6.822	0.049	-0.032	-0.131	0.024	0.069	-0.291
		TEMP	0.080	1.775	0.154	-6.175	-4.043	0.264	0.065	-1.515
		SEIS	1.153	5.223	3.261	0.172	0.218	0.255	0.316	0.176
		HYDR	0.321	4.221	0.218	0.039	0.284	0.023	0.033	0.059
	6013	OTHR	0.495	-6.830	0.201	-0.185	-0.186	0.005	-0.003	-0.272
		TEMP	-0.061	1.444	-0.177	-6.419	-3.904	-0.057	-0.026	-1.669
		SEIS	1.465	6.708	1.722	1.080	0.528	0.087	0.093	0.445
		HYDR	0.331	3.890	0.369	0.074	0.270	0.008	0.011	0.057
	6024	OTHR	0.774	-5.100	-0.477	0.284	0.121	0.016	-0.003	-0.239
		TEMP	-0.245	2.050	0.059	-7.408	-2.297	-0.304	-0.003	-1.547
		SEIS	1.020	4.482	5.110	0.945	0.580	0.341	0.213	0.438
		HYDR	0.328	3.114	0.438	0.055	0.261	0.019	0.019	0.021
3 RPV Pedestal Top	6606	OTHR	0.317	-5.541	0.773	0.371	2.423	0.054	0.185	-0.946
		TEMP	20.997	2.192	0.564	-6.643	-5.510	-0.035	-1.941	0.870
		SEIS	1.720	3.276	2.761	0.619	4.163	0.652	1.283	1.596
		HYDR	0.601	3.767	0.658	0.515	3.067	0.157	0.498	0.865
	6613	OTHR	0.040	-5.703	-0.076	0.239	2.425	-0.120	-0.054	-0.987
		TEMP	21.088	1.964	-0.425	-6.702	-5.546	0.139	2.063	0.862
		SEIS	2.522	4.072	1.265	1.131	3.943	0.418	0.353	1.478
		HYDR	0.579	3.509	0.305	0.452	2.863	0.129	0.324	0.851
	6624	OTHR	0.551	-5.428	0.318	0.348	2.127	0.158	0.025	-0.763
		TEMP	21.900	2.601	0.228	-6.671	-5.665	0.005	-2.338	1.055
		SEIS	1.715	4.318	3.393	0.669	2.541	0.293	0.367	0.909
		HYDR	0.534	3.632	0.319	0.447	2.797	0.153	0.426	0.817
4 RCCV Wetwell Bottom	1806	OTHR	-0.013	-2.852	0.003	0.243	1.445	0.017	0.010	0.537
		TEMP	2.533	0.468	-0.194	-4.438	-8.138	0.077	0.083	-1.750
		SEIS	2.166	7.214	6.356	0.406	2.376	0.128	0.034	0.884
		HYDR	0.703	0.817	0.455	0.397	2.392	0.010	0.005	0.996
	1813	OTHR	-0.195	-3.126	0.204	0.238	1.563	0.000	-0.002	0.637
		TEMP	1.866	-2.167	-0.420	-4.274	-7.773	-0.025	-0.007	-1.523
		SEIS	1.533	8.760	4.947	0.356	1.941	0.055	0.025	0.802
		HYDR	0.673	0.829	0.413	0.399	2.377	0.008	0.004	1.013
	1824	OTHR	0.197	-3.163	-0.002	0.240	1.375	0.008	-0.006	0.576
		TEMP	2.926	-2.481	0.046	-4.432	-8.134	0.020	-0.085	-1.667
		SEIS	1.165	7.835	7.408	0.148	0.664	0.093	0.062	0.312
		HYDR	0.756	0.570	0.387	0.403	2.421	0.009	0.007	1.029

OTHR: Loads other than thermal, seismic and hydrodynamic loads
TEMP: Thermal loads
SEIS: Seismic loads
HYDR: Hydrodyanmic loads

Table 3G.1-25

Combined Forces and Moments: RCCV, Selected Load Combination CV-11a (Continued)

Location	Element ID		Nx (MN/m)	Ny (MN/m)	Nxy (MN/m)	Mx (MNm/m)	My (MNm/m)	Mxy (MNm/m)	Qx (MN/m)	Qy (MN/m)
5 RCCV Wetwell Mid-Height	2606	OTHR	1.740	-2.393	-0.035	-0.115	-0.451	-0.003	0.007	-0.055
		TEMP	1.379	0.586	-0.171	-3.308	-1.033	0.018	0.039	0.074
		SEIS	0.502	5.610	5.947	0.084	0.164	0.156	0.022	0.244
		HYDR	0.888	0.605	0.524	0.052	0.296	0.023	0.004	0.184
	2613	OTHR	1.488	-2.852	0.189	-0.141	-0.486	0.001	-0.006	0.001
		TEMP	0.111	-2.544	-0.109	-3.090	-1.052	0.009	-0.075	0.370
		SEIS	1.143	7.169	4.887	0.113	0.220	0.058	0.033	0.318
		HYDR	0.859	0.630	0.432	0.044	0.234	0.021	0.010	0.149
	2624	OTHR	1.755	-2.660	-0.009	-0.084	-0.486	-0.002	0.003	-0.072
		TEMP	0.965	-2.909	-0.087	-3.293	-0.935	-0.026	0.067	0.189
		SEIS	0.510	6.406	6.772	0.114	0.220	0.117	0.041	0.125
		HYDR	0.999	0.525	0.348	0.067	0.237	0.006	0.006	0.142
6 RCCV Wetwell Top	3406	OTHR	1.687	-1.737	0.162	-0.057	-0.186	0.078	-0.040	-0.007
		TEMP	11.723	1.461	0.327	-4.151	-8.468	-0.227	0.461	3.349
		SEIS	0.518	4.183	5.523	0.142	0.667	0.242	0.209	0.277
		HYDR	0.630	0.484	0.561	0.095	0.369	0.133	0.156	0.196
	3413	OTHR	1.464	-2.661	0.120	-0.087	-0.257	-0.109	0.054	0.035
		TEMP	8.032	-3.439	0.044	-4.382	-9.151	-0.402	0.538	3.335
		SEIS	0.905	6.033	4.629	0.088	0.536	0.122	0.146	0.314
		HYDR	0.491	0.532	0.354	0.050	0.255	0.066	0.069	0.166
	3424	OTHR	1.475	-2.009	0.057	-0.003	-0.071	0.071	-0.025	0.009
		TEMP	10.292	-4.166	0.471	-3.681	-5.045	-0.039	-0.006	2.165
		SEIS	0.839	5.113	5.841	0.088	0.555	0.086	0.080	0.201
		HYDR	0.520	0.441	0.274	0.022	0.234	0.037	0.056	0.151
7 RCCV Drywell Bottom	3606	OTHR	1.702	-1.154	0.087	-0.008	0.140	0.098	-0.002	0.405
		TEMP	8.504	1.377	0.674	-5.342	-9.036	0.607	0.534	-1.980
		SEIS	0.521	3.896	5.237	0.122	0.893	0.084	0.199	0.401
		HYDR	0.652	0.500	0.361	0.085	0.342	0.038	0.149	0.126
	3613	OTHR	1.521	-2.148	0.178	0.031	0.432	-0.099	-0.001	0.598
		TEMP	4.607	-4.161	1.005	-4.955	-6.227	-0.363	0.317	-0.820
		SEIS	0.899	5.982	4.243	0.190	0.965	0.056	0.130	0.387
		HYDR	0.450	0.433	0.143	0.075	0.341	0.080	0.072	0.114
	3624	OTHR	1.471	-1.651	0.069	0.113	0.570	0.072	0.010	0.464
		TEMP	-4.291	-6.043	0.252	-0.934	-2.498	0.068	0.000	0.351
		SEIS	0.793	5.306	5.607	0.084	0.306	0.094	0.049	0.088
		HYDR	0.411	0.284	0.291	0.071	0.323	0.027	0.050	0.094
8 RCCV Drywell Mid-Height	4006	OTHR	1.279	-0.713	0.104	-0.103	-0.292	0.009	0.029	-0.141
		TEMP	5.952	2.178	0.212	-5.110	-5.057	0.011	-0.126	-0.683
		SEIS	1.651	2.975	4.729	0.173	0.663	0.135	0.082	0.363
		HYDR	0.646	0.410	0.173	0.035	0.329	0.021	0.111	0.106
	4013	OTHR	1.314	-2.325	0.322	-0.109	-0.399	0.009	-0.010	-0.135
		TEMP	4.287	-5.850	1.041	-4.672	-4.289	0.014	-0.132	-0.308
		SEIS	1.299	5.676	4.067	0.094	0.550	0.085	0.051	0.366
		HYDR	0.476	0.531	0.075	0.039	0.073	0.035	0.041	0.083
	4976	OTHR	1.166	-1.144	0.040	0.033	-0.050	0.000	-0.012	-0.230
		TEMP	-2.660	-5.335	0.580	-0.954	-1.780	0.003	0.013	-0.584
		SEIS	0.611	4.233	5.826	0.102	0.277	0.040	0.041	0.078
		HYDR	0.193	0.232	0.209	0.030	0.031	0.013	0.005	0.069

Table 3G.1-25

Combined Forces and Moments: RCCV, Selected Load Combination CV-11a (Continued)

Location	Element ID		Nx (MN/m)	Ny (MN/m)	Nxy (MN/m)	Mx (MNm/m)	My (MNm/m)	Mxy (MNm/m)	Qx (MN/m)	Qy (MN/m)
9 RCCV Drywell Top	4406	OTHR	0.567	-0.329	0.064	0.147	0.980	-0.001	0.006	-0.334
		TEMP	6.433	1.711	-0.232	-4.475	-3.816	0.299	0.087	-0.150
		SEIS	1.923	2.201	3.826	0.374	2.035	0.074	0.087	0.482
		HYDR	0.203	0.252	0.046	0.073	0.300	0.056	0.059	0.229
	4413	OTHR	-0.100	-2.509	0.217	0.124	1.189	0.036	0.003	-0.485
		TEMP	0.711	-6.632	-0.292	-4.753	-4.467	0.253	-0.243	0.643
		SEIS	1.311	5.546	3.537	0.199	1.434	0.163	0.053	0.196
		HYDR	0.516	0.629	0.230	0.226	0.253	0.171	0.080	0.264
	4424	OTHR	0.898	-0.765	0.018	0.294	1.510	0.019	0.003	-0.477
		TEMP	-5.846	-4.171	0.767	-0.363	1.129	-0.024	-0.022	-1.462
		SEIS	1.049	3.271	6.202	0.107	0.570	0.029	0.044	0.067
		HYDR	0.123	0.187	0.147	0.037	0.220	0.003	0.005	0.090
10 Basemat @ Center	80003	OTHR	-3.169	-1.933	0.152	1.321	1.823	-0.049	0.204	-0.143
		TEMP	-4.270	-5.140	0.021	-8.130	-8.102	-0.039	0.029	-0.008
		SEIS	3.276	2.673	1.515	11.475	10.858	0.559	0.608	0.927
		HYDR	0.908	0.831	0.076	3.250	2.955	0.047	0.202	0.192
	80007	OTHR	-3.198	-1.942	0.136	1.392	1.844	-0.032	-0.005	-0.233
		TEMP	-4.296	-5.104	0.056	-8.096	-8.099	-0.037	0.028	-0.009
		SEIS	3.366	2.850	0.987	11.022	10.741	0.435	0.677	0.928
		HYDR	0.906	0.817	0.065	3.190	2.945	0.049	0.168	0.228
	80012	OTHR	-3.249	-1.932	0.137	1.399	1.846	-0.035	-0.207	-0.025
		TEMP	-4.302	-5.040	0.042	-8.079	-8.109	-0.032	0.024	-0.001
		SEIS	3.012	3.152	0.799	10.595	10.490	0.184	0.814	0.902
		HYDR	0.885	0.797	0.050	3.157	2.919	0.041	0.254	0.145
11 Basemat Inside RPV Pedestal	80206	OTHR	-2.849	-2.069	0.228	-1.074	-0.876	0.850	1.075	-1.224
		TEMP	-4.260	-5.523	0.137	-8.575	-8.460	0.003	0.005	-0.035
		SEIS	4.254	1.786	3.108	12.614	11.117	2.433	1.559	2.036
		HYDR	1.044	0.895	0.149	4.683	4.269	0.707	0.579	0.597
	80213	OTHR	-2.956	-1.942	0.099	-0.034	-1.811	-0.130	-0.087	-1.672
		TEMP	-4.445	-5.127	0.161	-8.289	-8.565	-0.151	-0.018	-0.103
		SEIS	4.499	2.923	2.205	10.423	10.734	1.423	0.876	2.876
		HYDR	0.965	0.838	0.086	3.929	4.879	0.437	0.351	0.777
	80224	OTHR	-3.438	-2.320	0.065	-1.439	-0.174	-0.175	-1.384	-0.146
		TEMP	-4.372	-4.948	0.081	-8.177	-8.193	-0.045	-0.038	0.010
		SEIS	2.767	4.528	1.898	4.469	6.816	1.090	2.449	0.531
		HYDR	0.869	0.635	0.079	4.696	3.714	0.336	0.750	0.279

Table 3G.1-25

Combined Forces and Moments: RCCV, Selected Load Combination CV-11a (Continued)

Location	Element ID		Nx (MN/m)	Ny (MN/m)	Nxy (MN/m)	Mx (MNm/m)	My (MNm/m)	Mxy (MNm/m)	Qx (MN/m)	Qy (MN/m)
12 S/P Slab @ RPV	83306	OTHR	-0.087	0.882	-0.395	0.188	0.683	-0.060	1.582	-0.032
		TEMP	-10.607	10.981	0.454	-4.700	-2.770	0.032	-0.288	0.000
		SEIS	0.618	1.006	1.743	3.681	2.185	0.480	1.583	0.243
		HYDR	1.136	0.794	0.394	0.982	0.646	0.066	2.051	0.046
	83313	OTHR	0.109	0.649	-0.099	0.238	0.696	0.040	1.593	0.044
		TEMP	-10.822	11.242	-0.850	-4.737	-2.848	-0.039	-0.302	-0.028
		SEIS	1.085	1.488	0.797	3.219	1.952	0.433	1.463	0.182
		HYDR	1.082	0.810	0.252	0.956	0.588	0.111	2.021	0.039
	83324	OTHR	0.144	1.107	0.054	0.151	0.649	-0.038	1.543	-0.048
		TEMP	-10.702	11.862	1.279	-4.487	-2.654	0.006	-0.156	0.046
		SEIS	0.668	0.426	1.509	1.956	1.375	0.521	1.095	0.258
		HYDR	1.121	0.856	0.266	0.907	0.523	0.078	1.968	0.045
13 S/P Slab @ Center	83406	OTHR	0.098	0.642	-0.303	-2.185	-0.369	-0.025	-0.005	0.003
		TEMP	-6.490	4.881	-0.530	-3.815	-3.181	-0.001	-0.306	0.016
		SEIS	0.498	1.242	1.400	1.035	1.101	0.361	0.933	0.026
		HYDR	1.106	0.797	0.225	3.093	0.966	0.049	0.290	0.003
	83413	OTHR	0.409	0.441	-0.018	-2.160	-0.375	-0.004	0.004	0.002
		TEMP	-6.986	5.307	0.315	-3.900	-3.257	-0.015	-0.278	-0.011
		SEIS	1.126	1.180	0.726	1.014	0.969	0.298	0.828	0.011
		HYDR	1.054	0.819	0.140	3.078	0.943	0.058	0.281	0.003
	83424	OTHR	0.268	0.850	0.025	-2.126	-0.371	0.004	-0.025	0.000
		TEMP	-6.630	5.823	0.078	-3.895	-3.148	-0.003	-0.210	0.009
		SEIS	0.934	0.394	0.771	0.910	0.679	0.362	0.502	0.007
		HYDR	1.100	0.884	0.137	3.056	0.928	0.049	0.276	0.003
14 S/P Slab @ RCCV	83506	OTHR	0.208	0.513	-0.237	0.656	-0.124	-0.024	-1.237	0.001
		TEMP	-3.948	2.320	-0.446	-2.906	-3.131	-0.038	-0.275	0.016
		SEIS	0.268	1.370	1.119	3.124	0.231	0.084	0.620	0.086
		HYDR	1.024	0.791	0.166	1.721	0.267	0.017	1.913	0.010
	83513	OTHR	0.551	0.392	0.005	0.639	-0.130	-0.005	-1.227	0.002
		TEMP	-4.567	2.419	0.440	-3.190	-3.174	-0.008	-0.192	-0.001
		SEIS	1.033	0.985	0.696	2.796	0.328	0.054	0.526	0.056
		HYDR	0.978	0.820	0.137	1.684	0.258	0.017	1.909	0.008
	83524	OTHR	0.312	0.763	0.028	0.763	-0.083	-0.001	-1.255	0.001
		TEMP	-4.038	3.201	-0.017	-3.278	-3.153	0.013	-0.168	-0.005
		SEIS	0.967	0.450	0.436	1.590	0.290	0.012	0.102	0.092
		HYDR	1.028	0.899	0.128	1.687	0.241	0.015	1.906	0.007

Table 3G.1-25

Combined Forces and Moments: RCCV, Selected Load Combination CV-11a (Continued)

Location	Element ID		Nx (MN/m)	Ny (MN/m)	Nxy (MN/m)	Mx (MNm/m)	My (MNm/m)	Mxy (MNm/m)	Qx (MN/m)	Qy (MN/m)
15 Topslab @ Drywell Head Opening	98120	OTHR	0.425	0.777	0.966	0.548	0.449	0.201	0.310	-0.492
		TEMP	-7.068	-4.258	-0.770	0.956	0.732	2.765	-0.161	-0.002
		SEIS	1.555	0.940	0.893	0.425	0.527	0.317	0.136	0.305
		HYDR	0.234	0.076	0.098	0.050	0.072	0.037	0.009	0.019
	98135	OTHR	0.313	-0.231	-0.417	0.361	-0.070	0.154	0.101	-0.768
		TEMP	-8.729	-5.283	0.235	3.147	-2.057	-1.132	0.380	-0.267
		SEIS	2.718	0.341	0.531	0.717	0.333	0.139	0.083	0.353
		HYDR	0.372	0.053	0.077	0.068	0.020	0.017	0.005	0.008
	98104	OTHR	-0.151	1.909	-0.582	0.522	1.506	-0.133	-0.345	-0.436
		TEMP	-4.999	-1.752	0.585	-1.461	3.712	-1.500	0.185	-0.214
		SEIS	0.357	1.849	0.540	0.213	1.418	0.271	0.062	0.441
		HYDR	0.068	0.287	0.110	0.021	0.123	0.027	0.005	0.044
16 Topslab @ Center	98149	OTHR	0.478	1.057	-0.192	0.060	0.040	0.233	0.034	0.121
		TEMP	-6.075	-2.540	-1.137	2.229	2.310	0.496	0.037	0.048
		SEIS	1.936	0.665	0.775	0.778	0.442	0.176	0.091	0.291
		HYDR	0.345	0.181	0.037	0.047	0.036	0.026	0.016	0.020
	98170	OTHR	0.445	0.801	-0.269	0.217	0.189	-0.003	-0.016	-0.049
		TEMP	-5.510	-3.566	-1.042	2.141	2.864	-0.042	0.030	0.389
		SEIS	1.629	0.320	0.852	0.796	0.995	0.057	0.033	0.039
		HYDR	0.250	0.178	0.120	0.036	0.051	0.012	0.005	0.005
	98109	OTHR	0.305	1.273	-0.105	0.530	1.115	-0.114	-0.007	-0.173
		TEMP	-6.256	-0.887	0.773	1.219	2.564	-0.119	0.329	-0.005
		SEIS	0.193	1.488	0.657	0.713	0.991	0.192	0.115	0.152
		HYDR	0.044	0.151	0.182	0.029	0.084	0.025	0.005	0.013
17 Topslab @ RCCV	98174	OTHR	0.786	0.947	-0.024	-0.091	0.038	0.268	0.086	-0.081
		TEMP	-4.871	-2.689	-0.476	2.352	3.211	0.255	-0.023	0.434
		SEIS	1.728	1.206	0.788	0.842	0.842	0.344	0.225	0.151
		HYDR	0.293	0.187	0.067	0.110	0.121	0.081	0.040	0.036
	98197	OTHR	0.418	1.078	-0.214	-0.238	-0.895	-0.043	-0.032	-0.533
		TEMP	-7.584	-2.926	-1.360	1.917	3.110	0.130	0.154	-0.447
		SEIS	1.480	0.527	0.888	0.438	1.071	0.179	0.068	0.677
		HYDR	0.411	0.261	0.107	0.072	0.127	0.034	0.016	0.036
	98103	OTHR	0.444	1.355	-0.049	-0.180	0.381	-0.179	-0.389	-0.123
		TEMP	-6.577	-2.458	-0.070	3.431	3.308	0.118	0.450	0.084
		SEIS	0.296	1.626	1.181	2.170	0.708	0.293	0.947	0.120
		HYDR	0.058	0.171	0.217	0.090	0.080	0.014	0.023	0.002

Table 3G.1-26

Combined Forces and Moments: RCCV, Selected Load Combination CV-11b

Location	Element ID		Nx (MN/m)	Ny (MN/m)	Nxy (MN/m)	Mx (MNm/m)	My (MNm/m)	Mxy (MNm/m)	Qx (MN/m)	Qy (MN/m)
1 RPV Pedestal Bottom	5006	OTHR	-1.977	-7.395	-0.041	0.305	1.775	0.031	-0.010	1.081
		TEMP	-12.849	0.250	-0.523	-16.011	-12.625	-0.093	0.227	4.158
		SEIS	5.298	9.209	2.533	1.297	7.221	0.131	0.298	3.152
		HYDR	1.030	2.969	0.088	0.208	1.273	0.009	0.012	0.595
	5013	OTHR	-2.496	-7.823	0.055	0.244	1.977	-0.002	-0.005	1.264
		TEMP	-12.356	0.343	-0.104	-16.288	-13.239	-0.007	0.021	4.062
		SEIS	5.606	13.008	1.616	1.531	7.718	0.056	0.200	3.420
		HYDR	1.150	3.029	0.369	0.232	1.379	0.001	0.009	0.668
	5024	OTHR	-2.341	-7.281	0.048	0.412	1.748	-0.008	0.009	1.074
		TEMP	-12.862	0.231	0.003	-16.285	-11.829	-0.073	-0.054	4.265
		SEIS	3.003	8.339	3.354	0.757	3.064	0.027	0.299	1.464
		HYDR	1.260	2.975	0.188	0.241	1.360	0.007	0.012	0.662
2 RPV Pedestal Mid-Height	6006	OTHR	0.982	-7.139	0.028	-0.042	-0.174	0.024	0.072	-0.321
		TEMP	-2.408	0.615	0.443	-16.093	-14.923	0.436	0.146	-1.774
		SEIS	1.153	5.223	3.261	0.172	0.218	0.255	0.316	0.176
		HYDR	0.266	3.408	0.166	0.030	0.241	0.019	0.027	0.044
	6013	OTHR	0.702	-7.124	0.195	-0.196	-0.231	0.004	-0.003	-0.303
		TEMP	-2.624	0.212	-0.206	-16.582	-14.795	-0.048	-0.033	-2.015
		SEIS	1.465	6.708	1.722	1.080	0.528	0.087	0.093	0.445
		HYDR	0.259	3.036	0.351	0.057	0.219	0.006	0.009	0.045
	6024	OTHR	1.014	-5.279	-0.497	0.289	0.093	0.016	-0.006	-0.253
		TEMP	-2.728	0.667	0.076	-18.533	-11.361	-0.661	0.020	-1.697
		SEIS	1.020	4.482	5.110	0.945	0.580	0.341	0.213	0.438
		HYDR	0.261	2.491	0.369	0.041	0.212	0.016	0.014	0.019
3 RPV Pedestal Top	6606	OTHR	0.458	-5.898	0.784	0.408	2.659	0.045	0.211	-0.980
		TEMP	8.837	0.682	0.577	-16.163	-12.297	0.057	-1.395	-2.012
		SEIS	1.720	3.276	2.761	0.619	4.163	0.652	1.283	1.596
		HYDR	0.552	2.994	0.564	0.428	2.438	0.156	0.487	0.661
	6613	OTHR	0.163	-6.069	-0.087	0.272	2.672	-0.113	-0.075	-1.027
		TEMP	9.213	0.732	-0.359	-16.199	-12.536	0.030	1.518	-1.952
		SEIS	2.522	4.072	1.265	1.131	3.943	0.418	0.353	1.478
		HYDR	0.519	2.708	0.314	0.367	2.223	0.114	0.313	0.649
	6624	OTHR	0.692	-5.753	0.318	0.385	2.353	0.151	0.046	-0.794
		TEMP	9.545	0.848	0.253	-16.174	-12.377	0.066	-1.768	-1.800
		SEIS	1.715	4.318	3.393	0.669	2.541	0.293	0.367	0.909
		HYDR	0.491	2.860	0.273	0.368	2.206	0.145	0.411	0.629
4 RCCV Wetwell Bottom	1806	OTHR	0.168	-2.355	-0.027	0.317	1.889	0.018	0.011	0.683
		TEMP	-1.533	-1.021	-0.228	-10.248	-14.646	0.090	0.096	-1.555
		SEIS	2.166	7.214	6.356	0.406	2.376	0.128	0.034	0.884
		HYDR	0.574	0.582	0.330	0.296	1.771	0.007	0.004	0.746
	1813	OTHR	-0.022	-2.699	0.200	0.311	2.009	-0.001	-0.003	0.789
		TEMP	-2.037	-4.249	-0.394	-10.039	-14.121	-0.043	-0.006	-1.254
		SEIS	1.533	8.760	4.947	0.356	1.941	0.055	0.025	0.802
		HYDR	0.555	0.592	0.291	0.298	1.767	0.007	0.004	0.755
	1824	OTHR	0.393	-2.658	0.001	0.311	1.806	0.008	-0.005	0.723
		TEMP	-1.011	-4.103	0.136	-10.224	-14.384	0.028	-0.105	-1.321
		SEIS	1.165	7.835	7.408	0.148	0.664	0.093	0.062	0.312
		HYDR	0.623	0.400	0.281	0.305	1.826	0.008	0.007	0.778

Table 3G.1-26

Combined Forces and Moments: RCCV, Selected Load Combination CV-11b (Continued)

Location	Element ID		Nx (MN/m)	Ny (MN/m)	Nxy (MN/m)	Mx (MNm/m)	My (MNm/m)	Mxy (MNm/m)	Qx (MN/m)	Qy (MN/m)
5 RCCV Wetwell Mid-Height	2606	OTHR	2.256	-1.892	-0.073	-0.146	-0.581	-0.003	0.008	-0.051
		TEMP	-4.269	-1.249	-0.234	-9.962	-7.559	0.001	0.044	0.117
		SEIS	0.502	5.610	5.947	0.084	0.164	0.156	0.022	0.244
		HYDR	0.693	0.434	0.372	0.042	0.234	0.016	0.002	0.144
	2613	OTHR	1.959	-2.452	0.187	-0.172	-0.607	0.000	-0.006	0.008
		TEMP	-5.197	-5.323	-0.038	-9.725	-7.432	-0.015	-0.093	0.418
		SEIS	1.143	7.169	4.887	0.113	0.220	0.058	0.033	0.318
		HYDR	0.662	0.456	0.300	0.035	0.187	0.014	0.008	0.117
	2624	OTHR	2.257	-2.172	-0.012	-0.107	-0.612	-0.002	0.003	-0.079
		TEMP	-4.923	-4.754	-0.111	-10.020	-7.637	-0.043	0.078	0.194
		SEIS	0.510	6.406	6.772	0.114	0.220	0.117	0.041	0.125
		HYDR	0.765	0.373	0.246	0.051	0.193	0.005	0.005	0.115
6 RCCV Wetwell Top	3406	OTHR	2.110	-1.230	0.125	-0.057	-0.170	0.064	-0.029	-0.024
		TEMP	5.196	-0.343	0.501	-10.839	-14.129	0.028	0.144	2.477
		SEIS	0.518	4.183	5.523	0.142	0.667	0.242	0.209	0.277
		HYDR	0.457	0.355	0.398	0.070	0.277	0.095	0.111	0.142
	3413	OTHR	1.828	-2.277	0.131	-0.092	-0.220	-0.093	0.046	0.011
		TEMP	3.430	-7.154	0.362	-10.781	-14.124	-0.109	0.133	2.640
		SEIS	0.905	6.033	4.629	0.088	0.536	0.122	0.146	0.314
		HYDR	0.351	0.394	0.249	0.037	0.189	0.049	0.050	0.117
	3424	OTHR	1.829	-1.515	0.047	0.017	0.047	0.054	-0.016	-0.039
		TEMP	2.843	-6.398	0.484	-9.990	-9.736	0.045	-0.108	0.896
		SEIS	0.839	5.113	5.841	0.088	0.555	0.086	0.080	0.201
		HYDR	0.371	0.320	0.194	0.016	0.163	0.027	0.040	0.108
7 RCCV Drywell Bottom	3606	OTHR	2.088	-0.697	0.043	-0.015	0.106	0.089	0.002	0.445
		TEMP	0.851	-0.258	0.079	-12.665	-14.960	0.282	0.179	-0.838
		SEIS	0.521	3.896	5.237	0.122	0.893	0.084	0.199	0.401
		HYDR	0.472	0.366	0.253	0.061	0.246	0.025	0.107	0.089
	3613	OTHR	1.858	-1.813	0.204	0.012	0.394	-0.080	-0.001	0.650
		TEMP	-0.941	-8.499	1.390	-12.337	-13.241	-0.243	0.024	-0.345
		SEIS	0.899	5.982	4.243	0.190	0.965	0.056	0.130	0.387
		HYDR	0.324	0.321	0.101	0.054	0.250	0.057	0.052	0.082
	3624	OTHR	1.816	-1.171	0.047	0.109	0.545	0.054	0.011	0.509
		TEMP	-10.577	-8.035	0.298	-7.210	-6.858	0.089	-0.061	1.477
		SEIS	0.793	5.306	5.607	0.084	0.306	0.094	0.049	0.088
		HYDR	0.292	0.201	0.206	0.053	0.242	0.019	0.036	0.069
8 RCCV Drywell Mid-Height	4006	OTHR	1.477	-0.275	0.092	-0.086	-0.273	0.017	0.027	-0.220
		TEMP	1.893	0.841	-0.323	-12.242	-12.219	0.193	-0.154	-0.810
		SEIS	1.651	2.975	4.729	0.173	0.663	0.135	0.082	0.363
		HYDR	0.466	0.297	0.118	0.025	0.231	0.015	0.079	0.076
	4013	OTHR	1.506	-2.027	0.339	-0.124	-0.407	0.008	-0.010	-0.205
		TEMP	1.197	-10.529	1.292	-12.197	-11.585	0.046	-0.165	-0.457
		SEIS	1.299	5.676	4.067	0.094	0.550	0.085	0.051	0.366
		HYDR	0.341	0.398	0.050	0.027	0.051	0.025	0.030	0.059
	4976	OTHR	1.430	-0.711	0.014	0.036	-0.028	0.001	-0.013	-0.310
		TEMP	-7.092	-6.953	0.638	-7.681	-8.655	0.012	0.039	-0.305
		SEIS	0.611	4.233	5.826	0.102	0.277	0.040	0.041	0.078
		HYDR	0.135	0.170	0.146	0.021	0.023	0.009	0.004	0.052

Table 3G.1-26

Combined Forces and Moments: RCCV, Selected Load Combination CV-11b (Continued)

Location	Element ID		Nx (MN/m)	Ny (MN/m)	Nxy (MN/m)	Mx (MNm/m)	My (MNm/m)	Mxy (MNm/m)	Qx (MN/m)	Qy (MN/m)
9 RCCV Drywell Top	4406	OTHR	0.602	0.077	0.106	0.258	1.551	0.007	0.009	-0.507
		TEMP	6.726	0.270	-1.390	-11.635	-9.864	0.510	0.460	-0.602
		SEIS	1.923	2.201	3.826	0.374	2.035	0.074	0.087	0.482
		HYDR	0.148	0.182	0.036	0.052	0.214	0.040	0.043	0.162
	4413	OTHR	-0.064	-2.250	0.234	0.196	1.681	0.041	0.004	-0.642
		TEMP	-0.989	-11.897	-0.372	-12.126	-10.994	0.411	-0.180	0.175
		SEIS	1.311	5.546	3.537	0.199	1.434	0.163	0.053	0.196
		HYDR	0.363	0.469	0.168	0.162	0.182	0.123	0.057	0.187
	4424	OTHR	1.076	-0.398	-0.005	0.367	1.945	0.022	0.002	-0.604
		TEMP	-10.172	-5.565	0.973	-7.107	-5.872	-0.070	-0.009	-1.761
		SEIS	1.049	3.271	6.202	0.107	0.570	0.029	0.044	0.067
		HYDR	0.087	0.142	0.101	0.028	0.166	0.002	0.003	0.064
10 Basemat @ Center	80003	OTHR	-3.000	-1.745	0.151	0.261	0.806	-0.047	0.182	-0.126
		TEMP	-1.587	-2.420	-0.001	-8.464	-8.777	-0.040	0.022	-0.010
		SEIS	3.276	2.673	1.515	11.475	10.858	0.559	0.608	0.927
		HYDR	0.689	0.634	0.057	2.545	2.321	0.042	0.180	0.166
	80007	OTHR	-3.027	-1.753	0.135	0.335	0.827	-0.029	0.001	-0.204
		TEMP	-1.600	-2.375	0.039	-8.444	-8.779	-0.040	0.014	-0.014
		SEIS	3.366	2.850	0.987	11.022	10.741	0.435	0.677	0.928
		HYDR	0.688	0.622	0.051	2.496	2.314	0.045	0.157	0.193
	80012	OTHR	-3.079	-1.743	0.136	0.341	0.830	-0.033	-0.177	-0.021
		TEMP	-1.607	-2.298	0.028	-8.433	-8.799	-0.031	0.005	0.001
		SEIS	3.012	3.152	0.799	10.595	10.490	0.184	0.814	0.902
		HYDR	0.671	0.603	0.038	2.471	2.290	0.035	0.219	0.134
11 Basemat Inside RPV Pedestal	80206	OTHR	-2.673	-1.890	0.229	-1.869	-1.661	0.774	1.016	-1.181
		TEMP	-1.604	-2.924	0.120	-8.962	-9.256	0.034	-0.007	-0.049
		SEIS	4.254	1.786	3.108	12.614	11.117	2.433	1.559	2.036
		HYDR	0.804	0.702	0.105	3.702	3.366	0.602	0.480	0.476
	80213	OTHR	-2.777	-1.750	0.093	-0.910	-2.507	-0.119	-0.082	-1.593
		TEMP	-1.721	-2.346	0.088	-8.685	-9.343	-0.166	-0.026	-0.164
		SEIS	4.499	2.923	2.205	10.423	10.734	1.423	0.876	2.876
		HYDR	0.736	0.640	0.058	3.062	3.834	0.416	0.337	0.605
	80224	OTHR	-3.259	-2.147	0.062	-2.148	-1.021	-0.168	-1.292	-0.145
		TEMP	-1.574	-2.175	0.061	-8.644	-8.932	-0.052	-0.105	0.019
		SEIS	2.767	4.528	1.898	4.469	6.816	1.090	2.449	0.531
		HYDR	0.659	0.470	0.058	3.723	2.907	0.313	0.598	0.262

Table 3G.1-26

Combined Forces and Moments: RCCV, Selected Load Combination CV-11b (Continued)

Location	Element ID		Nx (MN/m)	Ny (MN/m)	Nxy (MN/m)	Mx (MNm/m)	My (MNm/m)	Mxy (MNm/m)	Qx (MN/m)	Qy (MN/m)
12 S/P Slab @ RPV	83306	OTHR	-0.027	1.054	-0.409	-0.061	0.652	-0.063	1.799	-0.036
		TEMP	-11.672	3.835	0.218	-9.639	-8.194	0.035	-0.073	-0.040
		SEIS	0.618	1.006	1.743	3.681	2.185	0.480	1.583	0.243
		HYDR	0.990	0.616	0.366	0.765	0.514	0.058	1.530	0.036
	83313	OTHR	0.171	0.811	-0.094	-0.005	0.667	0.040	1.812	0.048
		TEMP	-11.910	4.316	-0.426	-9.668	-8.271	-0.025	-0.075	0.011
		SEIS	1.085	1.488	0.797	3.219	1.952	0.433	1.463	0.182
		HYDR	0.927	0.623	0.255	0.751	0.465	0.104	1.507	0.030
	83324	OTHR	0.202	1.282	0.052	-0.097	0.618	-0.038	1.761	-0.052
		TEMP	-11.696	4.693	0.966	-9.530	-8.130	-0.002	0.004	0.007
		SEIS	0.668	0.426	1.509	1.956	1.375	0.521	1.095	0.258
		HYDR	0.959	0.664	0.265	0.716	0.420	0.072	1.470	0.036
13 S/P Slab @ Center	83406	OTHR	0.193	0.783	-0.308	-2.586	-0.542	-0.028	-0.076	0.003
		TEMP	-8.140	-0.574	-0.507	-9.101	-8.502	0.000	-0.107	0.016
		SEIS	0.498	1.242	1.400	1.035	1.101	0.361	0.933	0.026
		HYDR	0.941	0.627	0.200	2.291	0.733	0.043	0.226	0.003
	83413	OTHR	0.513	0.576	-0.017	-2.559	-0.548	-0.004	-0.066	0.002
		TEMP	-8.751	0.109	0.485	-9.199	-8.591	-0.012	-0.069	-0.008
		SEIS	1.126	1.180	0.726	1.014	0.969	0.298	0.828	0.011
		HYDR	0.879	0.643	0.139	2.280	0.712	0.055	0.218	0.003
	83424	OTHR	0.362	0.996	0.027	-2.526	-0.541	0.005	-0.097	0.000
		TEMP	-8.209	0.422	0.013	-9.166	-8.499	0.001	-0.043	0.006
		SEIS	0.934	0.394	0.771	0.910	0.679	0.362	0.502	0.007
		HYDR	0.919	0.699	0.135	2.265	0.703	0.046	0.216	0.003
14 S/P Slab @ RCCV	83506	OTHR	0.313	0.640	-0.238	1.009	-0.155	-0.025	-1.535	0.001
		TEMP	-6.270	-2.431	-0.382	-8.852	-8.637	-0.050	-0.135	0.021
		SEIS	0.268	1.370	1.119	3.124	0.231	0.084	0.620	0.086
		HYDR	0.849	0.624	0.149	1.309	0.196	0.015	1.419	0.008
	83513	OTHR	0.669	0.522	0.005	0.992	-0.162	-0.005	-1.524	0.002
		TEMP	-7.033	-2.078	0.612	-9.208	-8.687	-0.011	-0.022	0.001
		SEIS	1.033	0.985	0.696	2.796	0.328	0.054	0.526	0.056
		HYDR	0.795	0.647	0.132	1.278	0.187	0.017	1.416	0.007
	83524	OTHR	0.418	0.899	0.028	1.117	-0.112	-0.001	-1.553	0.001
		TEMP	-6.237	-1.445	-0.080	-9.171	-8.643	0.017	-0.039	-0.005
		SEIS	0.967	0.450	0.436	1.590	0.290	0.012	0.102	0.092
		HYDR	0.836	0.714	0.124	1.287	0.175	0.015	1.415	0.006

Table 3G.1-26

Combined Forces and Moments: RCCV, Selected Load Combination CV-11b (Continued)

Location	Element ID		Nx (MN/m)	Ny (MN/m)	Nxy (MN/m)	Mx (MNm/m)	My (MNm/m)	Mxy (MNm/m)	Qx (MN/m)	Qy (MN/m)
15 Topslab @ Drywell Head Opening	98120	OTHR	0.272	0.881	1.074	0.753	0.595	0.303	0.363	-0.657
		TEMP	-11.465	-10.588	-5.034	7.058	5.009	5.155	-1.417	-1.082
		SEIS	1.555	0.940	0.893	0.425	0.527	0.317	0.136	0.305
		HYDR	0.167	0.057	0.071	0.036	0.052	0.026	0.006	0.014
	98135	OTHR	-0.194	-0.319	-0.469	0.580	-0.136	0.162	0.136	-0.997
		TEMP	-16.071	-6.982	2.437	10.528	-0.434	-1.821	1.058	-1.141
		SEIS	2.718	0.341	0.531	0.717	0.333	0.139	0.083	0.353
		HYDR	0.259	0.037	0.053	0.049	0.015	0.012	0.004	0.006
	98104	OTHR	-0.194	2.189	-0.689	0.675	2.101	-0.220	-0.418	-0.580
		TEMP	-6.701	-12.118	2.879	2.391	11.786	-3.140	0.876	-0.611
		SEIS	0.357	1.849	0.540	0.213	1.418	0.271	0.062	0.441
		HYDR	0.047	0.201	0.077	0.015	0.089	0.019	0.004	0.032
16 Topslab @ Center	98149	OTHR	0.216	1.332	-0.342	0.231	0.114	0.256	0.053	0.218
		TEMP	-11.277	-3.014	-1.862	5.796	8.885	0.958	0.550	-1.906
		SEIS	1.936	0.665	0.775	0.778	0.442	0.176	0.091	0.291
		HYDR	0.245	0.130	0.028	0.034	0.026	0.019	0.012	0.014
	98170	OTHR	0.263	0.945	-0.339	0.428	0.437	-0.018	-0.025	-0.065
		TEMP	-9.611	-4.561	-0.870	4.301	5.407	-0.101	-0.114	0.048
		SEIS	1.629	0.320	0.852	0.796	0.995	0.057	0.033	0.039
		HYDR	0.176	0.127	0.084	0.025	0.036	0.009	0.003	0.004
	98109	OTHR	0.348	1.440	-0.126	0.780	1.533	-0.170	-0.029	-0.221
		TEMP	-7.853	-1.643	0.877	9.057	11.508	-0.324	0.767	0.077
		SEIS	0.193	1.488	0.657	0.713	0.991	0.192	0.115	0.152
		HYDR	0.030	0.106	0.129	0.021	0.060	0.018	0.004	0.009
17 Topslab @ RCCV	98174	OTHR	0.775	1.163	-0.073	0.034	0.191	0.372	0.144	-0.121
		TEMP	-9.261	-3.967	-1.472	5.055	6.597	0.112	-0.062	0.291
		SEIS	1.728	1.206	0.788	0.842	0.842	0.344	0.225	0.151
		HYDR	0.208	0.134	0.049	0.078	0.086	0.057	0.028	0.026
	98197	OTHR	0.426	1.262	-0.222	-0.211	-1.309	-0.084	-0.050	-0.807
		TEMP	-11.733	-4.685	-1.499	4.215	6.202	0.220	0.358	-0.438
		SEIS	1.480	0.527	0.888	0.438	1.071	0.179	0.068	0.677
		HYDR	0.290	0.186	0.078	0.051	0.091	0.024	0.011	0.026
	98103	OTHR	0.573	1.562	-0.069	-0.606	0.401	-0.259	-0.661	-0.172
		TEMP	-7.870	-5.563	-0.327	12.878	12.662	0.251	0.583	0.155
		SEIS	0.296	1.626	1.181	2.170	0.708	0.293	0.947	0.120
		HYDR	0.039	0.121	0.155	0.068	0.059	0.011	0.018	0.001

Table 3G.1-27

Sectional Thicknesses and Rebar Ratios of RCCV Used in the Evaluation

Location	Element ID	Thickness (m)	Primary Reinforcement					Shear Tie	
			Position	Direction 1*1		Direction 2*1			
				Arrangement*2	Ratio (%)	Arrangement*2	Ratio (%)	Arrangement	Ratio (%)
1 RPV Pedestal Bottom	5006 5013 5024	2.4	Inside	2-#18@300	0.717	3-#18@3.6º (+1-#18@3.6º)	1.007	#9@1.8ºx300	1.007
			Outside	3-#18@300	1.075	3-#18@1.8º (+1-#18@1.8º)	2.013		
2 RPV Pedestal Mid-Height	6006 6013 6024	2.4	Inside	2-#18@300	0.717	3-#18@3.6º	0.755	#9@3.6ºx600	0.252
			Outside	3-#18@300	1.075	3-#18@1.8º	1.510		
3 RPV Pedestal Top	6606 6613 6624	2.4	Inside	2-#18@300 (+1-#18@300)	1.075	3-#18@3.6º	0.755	#9@1.8ºx300	1.007
			Outside	3-#18@300 (+1-#18@300)	1.434	3-#18@1.8º	1.510		
4 RCCV Wetwell Bottom	1806 1813 1824	2.0	Inside	2-#18@300 +1-#18@600	1.075	3-#18@0.9º (+1-#18@3.6º)	1.405	#9@1.2ºx300	0.540
			Outside	3-#18@300	1.290	3-#18@0.9º (+1-#18@1.8º)	1.513		
5 RCCV Wetwell Mid-Height	2606 2613 2624	2.0	Inside	2-#18@300 +1-#18@600	1.075	2-#18@0.9º	0.865	#9@1.2ºx600	0.270
			Outside	3-#18@300 +1-#18@600	1.505	3-#18@0.9º +1-#18@0.9º	1.729		
6 RCCV Wetwell Top	3406 3413 3424	2.0	Inside	2-#18@300 +1-#18@600 (+1-#18@300 +1-#18@600)	1.720	2-#18@0.9º	0.865	#9@0.9ºx300	0.721
			Outside	3-#18@300 +1-#18@600 (+2-#18@600)	1.935	3-#18@0.9º +1-#18@0.9º	1.729		
7 RCCV Drywell Bottom	3606 3613 3624	2.0	Inside	2-#18@300 +1-#18@600 (+2-#18@600)	1.505	2-#18@0.9º	0.865	#9@0.9ºx300	0.721
			Outside	3-#18@300 +1-#18@600 (+1-#18@300 +1-#18@600)	2.151	3-#18@0.9º +1-#18@0.9º	1.729		
8 RCCV Drywell Mid-Height	4006 4013 4976	2.0	Inside	2-#18@300 +1-#18@600	1.075	2-#18@0.9º	0.865	#9@1.2ºx600	0.270
			Outside	3-#18@300 +1-#18@600	1.505	3-#18@0.9º +1-#18@0.9º	1.729		
9 RCCV Drywell Top	4406 4413	2.0	Inside	2-#18@300 +1-#18@600	1.075	2-#18@0.9º	0.865	#9@1.2ºx300	0.540
			Outside	3-#18@300 +1-#18@600	1.505	3-#18@0.9º +1-#18@0.9º	1.729		
	4424	2.0	Inside	2-#18@300	0.860	2-#18@0.9º (+1-#18@1.8º)	1.081	#9@1.2ºx300	0.540
			Outside	3-#18@300	1.290	3-#18@0.9º	1.297		

Note *1: RCCV, Pedestal Direction 1: Hoop Direction 2: Vertical
S/P Slab Direction 1: Radial Direction 2: Circumferential
Top slab Direction 1: N-S Direction 2: E-W
Basemat @ center Direction 1: N-S Direction 2 : E-W
Basemat Inside RPV Pedestal Direction 1: Top: Radial, Bottom: N-S Direction 2: Top: Circumferential, Bottom: E-W
Note *2: Rebar in parenthesis indicates additional bars locally required.

Table 3G.1-27

Sectional Thicknesses and Rebar Ratios of RCCV Used in the Evaluation (Continued)

Location	Element ID	Thickness (m)	Primary Reinforcement					Shear Tie	
			Position	Direction 1*1		Direction 2*1			
				Arrangement	Ratio (%)	Arrangement	Ratio (%)	Arrangement	Ratio (%)
10 Basemat @ Center	80003 80007 80012	5.1	Top	3-#11@120	0.493	3-#11@120	0.493	#9@600x600	0.179
			Bottom	5-#11@200	0.493	5-#11@200	0.493		
11 Basemat Inside RPV Pedestal	80206 80213 80224	5.1	Top	5-#11@1.8°	0.507	4-#11@200 +1-#11@400	0.444	#11@1.8°x400	1.292
			Bottom	5-#11@200	0.493	5-#11@200	0.493		
12 S/P Slab @ RPV	83306 83313 83324	2.0	Top	2-#18@1.8º	0.913	2-#18@300	0.860	#9@1.2ºx300	1.141
			Bottom	2-#18@1.8º	0.913	2-#18@300	0.860		
13 S/P Slab @ Center	83406 83413 83424	2.0	Top	2-#18@0.9º	1.264	2-#18@300	0.860	#9@1.8ºx600	0.263
			Bottom	2-#18@0.9º	1.264	2-#18@300	0.860		
14 S/P Slab @ RCCV	83506 83513 83524	2.0	Top	2-#18@0.9º	0.966	2-#18@300	0.860	#9@0.72ºx300	1.007
			Bottom	2-#18@0.9º	0.966	2-#18@300	0.860		
15 Top slab @ Drywell Head Opening	98120 98135	2.4	Top	3-#14@300	0.605	3-#14@300	0.605	#9@600x300	0.358
			Bottom	3-#14@300	0.605	3-#14@300	0.605		
	98104	2.4	Top	3-#14@300	0.605	3-#14@300 (+1-#14@300 +1-#14@600)	0.907	#9@600x300	0.358
			Bottom	3-#14@300	0.605	3-#14@300	0.605		
16 Top slab @ Center	98149	2.4	Top	3-#14@300	0.605	3-#14@300 (+1-#14@300 +1-#14@600)	0.907	#9@600x600	0.179
			Bottom	3-#14@300	0.605	3-#14@300	0.605		
	93109	2.4	Top	3-#14@300 (+1-#14@600)	0.706	3-#14@300 (+1-#14@300 +1-#14@600)	0.907	#9@600x600	0.179
			Bottom	3-#14@300	0.605	3-#14@300	0.605		
	98170	2.4	Top	3-#14@300	0.605	3-#14@300	0.605	#9@600x600	0.179
			Bottom	3-#14@300	0.605	3-#14@300	0.605		

Note *1: RCCV, Pedestal — Direction 1: Hoop — Direction 2: Vertical
S/P Slab — Direction 1: Radial — Direction 2 : Circumferential
Top slab — Direction 1: N-S — Direction 2: E-W
Basemat @center — Direction 1: N-S — Direction 2: E-W
Basemat Inside RPV Pedestal — Direction 1: Top:Radial, Bottom: N-S — Direction 2 Top: Circumferential, Bottom: E-W

Note *2: Rebar in parenthesis indicates additional bars locally required.

Table 3G.1-27

Sectional Thicknesses and Rebar Ratios of RCCV Used in the Evaluation (Continued)

Location	Element ID	Thickness (m)	Primary Reinforcement					Shear Tie	
			Position	Direction 1*1		Direction 2*1			
				Arrangement	Ratio (%)	Arrangement	Ratio (%)	Arrangement	Ratio (%)
17 Top slab @ RCCV	98174	2.4	Top	3-#14@300	0.605	3-#14@300 (+1-#14@300 +1-#14@600)	0.907	#9@600x600	0.179
			Bottom	3-#14@300	0.605	3-#14@300	0.605		
	98197	2.4	Top	3-#14@300	0.605	3-#14@300	0.605	#9@300x300	0.717
			Bottom	3-#14@300	0.605	3-#14@300	0.605		
	98103	2.4	Top	3-#14@300 (+1-#14@600)	0.706	3-#14@300 (+1-#14@300 +1-#14@600)	0.907	#9@300x300	0.717
			Bottom	3-#14@300	0.605	3-#14@300	0.605		

Note *1: RCCV, Pedestal — Direction 1: Hoop — Direction 2: Vertical
S/P Slab — Direction 1: Radial — Direction 2: Circumferential
Top slab — Direction 1: N-S — Direction 2: E-W
Basemat @center — Direction 1: N-S — Direction 2 : E-W
Basemat Inside RPV Pedestal — Direction 1: Top: Radial, Bottom: N-S — Direction 2: Top: Circumferential, Bottom: E-W

Note *2: Rebar in parenthesis indicates additional bars locally required.

Table 3G.1-28

Rebar and Concrete Stresses of RCCV: Selected Load Combination CV-1

Location	Element ID	Concrete Stress (MPa)		Primary Reinforcement Stress (MPa)				
		Calculated	Allowable	Calculated				Allowable
				Direction 1*		Direction 2*		
				In/Top	Out/Bottom	In/Top	Out/Bottom	
1 RPV	5006	-4.1	-15.5	-2.5	-3.4	-10.4	-24.5	310.2
Pedestal	5013	-4.4	-15.5	-4.2	-4.2	-10.4	-26.0	310.2
Bottom	5024	-4.0	-15.5	-3.1	-4.9	-10.1	-23.7	310.2
2 RPV	6006	-3.1	-15.5	33.4	23.2	-21.0	-17.4	310.2
Pedestal	6013	-3.1	-15.5	19.4	21.6	-21.1	-17.1	310.2
Mid-Height	6024	-2.1	-15.5	49.0	17.0	-13.8	-12.9	310.2
3 RPV	6606	-4.7	-15.5	24.6	5.2	-0.9	-25.4	310.2
Pedestal	6613	-4.6	-15.5	11.6	3.3	-5.1	-25.9	310.2
Top	6624	-4.3	-15.5	26.3	6.1	-4.6	-24.0	310.2
4 RCCV	1806	-4.8	-15.5	19.1	3.2	24.8	-17.4	310.2
Wetwell	1813	-5.1	-15.5	15.2	2.4	23.4	-18.7	310.2
Bottom	1824	-4.6	-15.5	24.9	5.0	18.3	-18.1	310.2
5 RCCV	2606	-1.4	-15.5	57.3	45.8	-12.3	1.7	310.2
Wetwell	2613	-1.6	-15.5	48.7	41.5	-16.5	1.9	310.2
Mid-Height	2624	-1.7	-15.5	58.9	44.4	-10.2	-1.7	310.2
6 RCCV	3406	-0.9	-15.5	37.2	30.4	2.2	-3.4	310.2
Wetwell	3413	-1.0	-15.5	30.6	27.8	-16.9	3.3	310.2
Top	3424	-0.6	-15.5	33.6	24.5	0.5	-6.3	310.2
7 RCCV	3606	-0.5	-15.5	41.9	26.3	9.2	-6.2	310.2
Drywell	3613	-1.3	-15.5	37.7	24.0	-5.8	-3.1	310.2
Bottom	3624	-0.6	-15.5	39.8	20.6	8.6	-10.7	310.2
8 RCCV	4006	-0.2	-15.5	37.1	28.0	0.8	10.5	310.2
Drywell	4013	-1.4	-15.5	36.2	30.4	-7.0	-1.0	310.2
Mid-Height	4976	-0.2	-15.5	40.7	24.7	-1.2	-0.9	310.2
9 RCCV	4406	-4.9	-15.5	30.2	6.8	94.9	-1.5	310.2
Drywell	4413	-4.9	-15.5	10.2	1.9	35.0	-16.1	310.2
Top	4424	-5.6	-15.5	55.4	12.5	74.2	-6.4	310.2
10 Basemat	80003	-0.7	-12.4	-4.3	-2.8	-1.6	-1.7	310.2
@ Center	80007	-0.7	-12.4	-4.3	-2.9	-1.6	-1.7	310.2
	80012	-0.7	-12.4	-4.4	-3.0	-1.6	-1.7	310.2
11 Basemat	80206	-1.3	-12.4	-4.4	0.3	-2.9	1.9	310.2
Inside	80213	-1.2	-12.4	-2.5	-1.6	-4.2	6.4	310.2
RPV Pedestal	80224	-1.2	-12.4	-5.4	-0.5	-3.0	-0.3	310.2
12 S/P Slab	83306	-0.7	-15.5	13.9	20.7	72.8	12.0	310.2
@ RPV	83313	-0.2	-15.5	0.8	18.5	55.8	0.9	310.2
	83324	-0.2	-15.5	-3.1	22.0	67.7	15.7	310.2
13 S/P Slab	83406	-6.0	-15.5	-7.0	81.8	13.3	60.7	310.2
@ Center	83413	-5.6	-15.5	-4.9	83.1	5.5	46.3	310.2
	83424	-5.8	-15.5	-7.3	79.2	10.9	59.7	310.2
14 S/P Slab	83506	-3.6	-15.5	67.2	-12.6	25.8	18.0	310.2
@ RCCV	83513	-3.1	-15.5	69.7	-8.5	13.5	10.9	310.2
	83524	-3.9	-15.5	66.1	-14.4	28.5	19.0	310.2
15 Topslab	98120	-3.3	-15.5	107.8	12.3	115.6	22.7	310.2
@ Drywell Head	98135	-1.2	-15.5	9.0	-6.5	-9.8	4.9	310.2
Opening	98104	-4.1	-15.5	82.3	10.6	146.9	14.5	310.2
16 Topslab	98149	-1.0	-15.5	18.7	17.0	38.7	66.2	310.2
@ Center	98170	-1.7	-15.5	45.8	3.9	69.0	12.9	310.2
	98109	-3.7	-15.5	60.3	5.9	93.7	6.5	310.2
17 Topslab	98174	-2.7	-15.5	33.2	46.5	44.4	44.0	310.2
@ RCCV	98197	-2.7	-15.5	10.5	26.1	8.3	106.5	310.2
	98103	-3.7	-15.5	33.9	59.3	52.7	45.9	310.2

Note: Negative value means compression.

Note *: RCCV, Pedestal Direction 1: Hoop Direction 2: Vertical
S/P Slab Direction 1: Radial Direction 2: Circumferential
Top slab Direction 1: N-S Direction 2: E-W
Basemat @center Direction 1: N-S Direction 2: E-W
Basemat Inside RPV Pedestal Direction 1: Top :Radial, Bottom: N-S Direction2 Top: Circumferential, Bottom: E-W

Table 3G.1-29

Rebar and Concrete Stresses of RCCV: Selected Load Combination CV-7a

Location	Element ID	Concrete Stress (MPa)		Primary Reinforcement Stress (MPa)				
		Calculated	Allowable	Calculated				Allowable
				Direction 1*		Direction 2*		
				In/Top	Out/Bottom	In/Top	Out/Bottom	
1 RPV	5006	-7.3	-28.7	-20.4	29.9	-41.6	-20.8	367.9
Pedestal	5013	-7.9	-28.7	-22.7	8.1	-43.7	-17.2	367.9
Bottom	5024	-7.4	-28.7	-22.8	30.6	-41.0	-16.1	367.9
2 RPV	6006	-7.8	-28.7	7.4	90.1	-45.1	-24.8	367.9
Pedestal	6013	-7.7	-28.7	-4.6	91.1	-43.5	20.7	367.9
Mid-Height	6024	-5.5	-28.7	5.0	97.6	-28.8	21.2	367.9
3 RPV	6606	-5.1	-28.7	224.4	235.4	96.1	-131.5	367.9
Pedestal	6613	-7.8	-28.7	216.9	233.5	23.6	-60.1	367.9
Top	6624	-11.0	-28.7	220.6	226.9	-101.7	45.8	367.9
4 RCCV	1806	-11.3	-29.0	36.7	118.3	59.9	79.3	369.7
Wetwell	1813	-9.6	-29.0	-9.7	20.4	40.5	50.9	369.7
Bottom	1824	-10.9	-29.0	-44.0	-29.7	-31.6	69.6	369.7
5 RCCV	2606	-4.2	-29.1	-14.9	33.5	-15.8	19.0	370.2
Wetwell	2613	-3.8	-29.1	24.8	102.6	-20.3	6.0	370.2
Mid-Height	2624	-4.2	-29.1	-19.9	11.7	-15.6	4.2	370.2
6 RCCV	3406	-2.4	-29.1	259.8	266.3	-82.5	138.2	370.2
Wetwell	3413	-8.5	-29.1	217.4	229.9	-163.9	93.1	370.2
Top	3424	-9.4	-29.1	276.4	292.1	-126.8	123.7	370.2
7 RCCV	3606	-8.7	-28.7	158.0	159.9	-42.0	121.5	367.8
Drywell	3613	-14.4	-28.7	77.4	147.2	-57.4	52.0	367.8
Bottom	3624	-3.6	-27.7	107.3	96.7	-58.3	59.5	360.2
8 RCCV	4006	-3.5	-28.7	104.8	145.0	-48.8	78.4	367.8
Drywell	4013	-10.2	-28.7	75.4	135.9	-46.6	64.5	367.8
Mid-Height	4976	-1.3	-27.7	96.4	85.5	-27.0	35.3	360.2
9 RCCV	4406	-5.6	-28.7	44.5	97.6	18.5	-9.5	367.8
Drywell	4413	-4.0	-28.7	-8.6	67.4	2.5	-10.7	367.8
Top	4424	-8.9	-27.7	78.3	36.4	121.8	-10.3	360.2
10 Basemat	80003	-4.9	-23.2	-16.6	14.2	-14.6	13.8	370.2
@ Center	80007	-4.8	-23.2	-16.8	13.2	-14.5	13.8	370.2
	80012	-4.8	-23.2	-16.9	12.8	-14.2	14.0	370.2
11 Basemat	80206	-7.3	-23.2	-7.8	37.6	-12.9	38.0	370.2
Inside	80213	-7.2	-23.2	-5.1	25.7	-13.2	56.7	370.2
RPV Pedestal	80224	-6.6	-23.2	-11.9	34.4	-11.0	30.7	370.2
12 S/P Slab	83306	-7.9	-29.0	-22.4	-14.1	-43.8	-25.2	369.8
@ RPV	83313	-4.0	-29.0	-58.4	67.5	126.6	284.3	369.8
	83324	-3.7	-29.0	-47.4	83.2	154.3	304.9	369.8
13 S/P Slab	83406	-17.4	-29.0	-42.7	136.7	38.4	280.0	369.8
@ Center	83413	-17.6	-29.0	-50.3	116.3	30.8	253.6	369.8
	83424	-16.9	-29.0	-47.1	129.3	37.4	269.6	369.8
14 S/P Slab	83506	-5.5	-29.0	41.5	57.2	-4.7	181.0	369.8
@ RCCV	83513	-22.4	-29.0	-143.6	-155.7	30.9	146.9	369.8
	83524	-6.4	-29.0	21.3	40.6	27.4	173.6	369.8
15 Topslab	98120	-14.6	-27.9	100.9	-13.9	198.0	14.3	361.7
@ Drywell Head	98135	-4.4	-27.9	-2.8	-24.6	-14.8	26.2	361.7
Opening	98104	-12.4	-27.9	37.8	-2.5	239.2	-11.3	361.7
16 Topslab	98149	-9.3	-28.0	-15.4	86.2	132.3	34.3	362.7
@ Center	98170	-6.5	-28.0	151.7	19.8	223.7	21.6	362.7
	98109	-5.2	-28.0	94.4	13.4	174.3	9.3	362.7
17 Topslab	98174	-9.0	-28.0	94.6	-4.7	140.4	9.8	362.7
@ RCCV	98197	-1.9	-28.0	143.3	64.6	152.0	103.2	362.7
	98103	-2.6	-28.0	22.6	5.2	89.6	5.8	362.7

Note: Negative value means compression.
Note *: RCCV, Pedesta Direction 1: Hoop Direction 2: Vertical
S/P Slab Direction 1: Radial Direction 2: Circumferential
Top slab Direction 1: N-S Direction 2: E-W
Basemat @center Direction 1: N-S Direction 2: E-W
Basemat Inside RPV Pedestal Direction 1: Top :Radial, Bottom: N-S Direction 2 Top: Circumferential, Bottom: E-W

Table 3G.1-30
Rebar and Concrete Stresses of RCCV: Selected Load Combination CV-7b

Location	Element ID	Concrete Stress (MPa)		Primary Reinforcement Stress (MPa)				
		Calculated	Allowable	Calculated				Allowable
				Direction 1*		Direction 2*		
				In/Top	Out/Bottom	In/Top	Out/Bottom	
1 RPV	5006	-14.8	-27.9	-82.3	-25.1	-31.5	-10.3	361.6
Pedestal	5013	-15.8	-27.9	-87.4	-29.5	-38.5	-7.6	361.6
Bottom	5024	-16.5	-27.9	-93.2	-34.5	-34.1	-6.7	361.6
2 RPV	6006	-11.5	-27.9	-47.6	5.2	-51.9	70.6	361.6
Pedestal	6013	-12.7	-27.9	-47.0	14.6	-59.2	71.4	361.6
Mid-Height	6024	-12.3	-27.9	-46.4	34.3	-42.0	59.5	361.6
3 RPV	6606	-20.2	-27.9	-121.5	-75.0	-34.0	8.9	361.6
Pedestal	6613	-11.3	-27.9	-49.2	-7.0	-50.1	10.1	361.6
Top	6624	-12.1	-27.9	-14.8	118.9	-57.7	16.5	361.6
4 RCCV	1806	-12.2	-28.3	-12.5	117.0	-24.8	95.4	364.4
Wetwell	1813	-11.7	-28.3	-15.1	115.5	-31.4	70.8	364.4
Bottom	1824	-13.6	-28.3	-11.7	126.5	-35.3	99.1	364.4
5 RCCV	2606	-10.5	-28.2	20.6	183.0	-28.4	85.9	363.8
Wetwell	2613	-10.8	-28.2	11.6	175.4	-36.4	51.8	363.8
Mid-Height	2624	-10.7	-28.2	18.3	180.1	-38.3	60.6	363.8
6 RCCV	3406	-11.2	-28.2	-45.6	-1.1	-32.1	104.4	363.8
Wetwell	3413	-12.9	-28.2	-12.1	85.9	-63.9	-4.3	363.8
Top	3424	-10.5	-28.2	-17.0	93.4	-19.1	134.0	363.8
7 RCCV	3606	-14.8	-27.7	15.6	152.1	-40.7	149.8	360.2
Drywell	3613	-13.9	-27.7	-21.1	77.5	-65.7	7.8	360.2
Bottom	3624	-7.1	-26.7	25.8	129.3	-5.2	149.1	352.9
8 RCCV	4006	-11.7	-27.7	20.6	183.7	-19.0	145.7	360.2
Drywell	4013	-10.4	-27.7	14.0	172.5	-35.9	70.2	360.2
Mid-Height	4976	-9.4	-26.7	11.5	134.7	-25.0	85.2	352.9
9 RCCV	4406	-6.3	-27.7	-29.0	175.7	86.2	48.4	360.2
Drywell	4413	-8.6	-27.7	-22.4	81.4	-9.2	-11.6	360.2
Top	4424	-7.8	-26.7	-10.5	117.8	6.9	61.2	352.9
10 Basemat	80003	-4.3	-23.2	-9.0	26.1	-5.8	30.9	370.2
@ Center	80007	-4.2	-23.2	-9.2	25.1	-5.7	30.9	370.2
	80012	-4.2	-23.2	-9.5	24.4	-5.4	31.1	370.2
11 Basemat	80206	-6.4	-23.2	-3.6	46.9	-6.4	53.7	370.2
Inside	80213	-6.4	-23.2	5.5	37.1	-6.0	70.2	370.2
RPV Pedestal	80224	-6.0	-23.2	-4.8	46.5	-3.8	48.0	370.2
12 S/P Slab	83306	-12.2	-28.3	-48.5	-24.1	-40.0	77.2	364.4
@ RPV	83313	-11.9	-28.3	-45.9	-17.0	-35.9	84.5	364.4
	83324	-12.2	-28.3	-38.1	-9.4	-35.2	97.0	364.4
13 S/P Slab	83406	-21.5	-28.3	-59.9	113.8	-13.4	306.7	364.4
@ Center	83413	-21.4	-28.3	-28.1	205.3	-13.3	298.9	364.4
	83424	-19.4	-28.3	-37.3	186.7	-10.6	316.6	364.4
14 S/P Slab	83506	-11.3	-28.3	21.2	41.1	-21.5	175.4	364.4
@ RCCV	83513	-9.7	-28.3	23.4	58.4	-28.1	175.1	364.4
	83524	-9.4	-28.3	24.5	30.8	-17.6	196.3	364.4
15 Topslab	98120	-20.8	-26.2	158.9	-30.2	151.6	-10.8	349.2
@ Drywell Head	98135	-17.0	-26.2	88.6	-69.6	-10.9	6.5	349.2
Opening	98104	-19.4	-26.2	19.6	-9.9	246.0	-46.1	349.2
16 Topslab	98149	-12.3	-26.6	-5.2	-32.1	273.7	10.1	352.0
@ Center	98170	-10.9	-26.6	78.7	-5.8	266.5	2.7	352.0
	98109	-13.0	-27.2	106.8	-16.1	249.4	-12.9	356.6
17 Topslab	98174	-6.2	-26.6	-1.5	-17.9	167.3	4.0	352.0
@ RCCV	98197	-2.8	-26.6	59.8	-0.9	138.8	46.1	352.0
	98103	-9.5	-27.2	61.4	-10.7	143.6	-13.0	356.6

Note: Negative value means compression.
Note *: RCCV, Pedestal Direction 1: Hoop Direction 2: Vertical
S/P Slab Direction 1: Radial Direction 2: Circumferential,
Top slab Direction 1: N-S Direction 2: E-W
Basemat @center Direction 1: N-S Direction 2: E-W
Basemat Inside RPV Pedesta Direction 1: Top :Radial, Bottom: N-S Direction 2 Top: Circumferential, Bottom: E-W

Table 3G.1-31
Rebar and Concrete Stresses of RCCV: Selected Load Combination CV-11a

Location	Element ID	Concrete Stress (MPa)		Primary Reinforcement Stress (MPa)				
		Calculated	Allowable	Calculated				Allowable
				Direction 1*		Direction 2*		
				In/Top	Out/Bottom	In/Top	Out/Bottom	
1 RPV	5006	-14.6	-28.7	92.3	121.9	260.6	-20.6	367.9
Pedestal	5013	-16.4	-28.7	87.9	115.9	320.0	12.9	367.9
Bottom	5024	-11.0	-28.7	40.4	121.3	169.5	44.9	367.9
2 RPV	6006	-8.2	-28.7	14.1	113.2	-41.1	72.0	367.9
Pedestal	6013	-8.7	-28.7	5.5	127.8	-47.4	74.9	367.9
Mid-Height	6024	-7.1	-28.7	78.6	167.8	139.6	91.0	367.9
3 RPV	6606	-5.7	-28.7	269.4	256.7	268.0	-143.6	367.9
Pedestal	6613	-7.5	-28.7	237.1	270.2	69.3	106.5	367.9
Top	6624	-9.0	-28.7	253.3	256.5	-121.7	153.1	367.9
4 RCCV	1806	-10.0	-29.0	140.0	213.4	220.7	125.8	369.7
Wetwell	1813	-13.6	-29.0	108.8	127.1	203.0	121.3	369.7
Bottom	1824	-14.6	-29.0	-42.2	50.0	145.3	138.6	369.7
5 RCCV	2606	-7.5	-29.1	51.3	106.2	201.6	159.1	370.2
Wetwell	2613	-7.6	-29.1	89.6	129.0	173.6	135.9	370.2
Mid-Height	2624	-9.0	-29.1	93.5	119.0	200.9	143.2	370.2
6 RCCV	3406	-7.8	-29.1	296.4	295.0	138.0	181.1	370.2
Wetwell	3413	-9.7	-29.1	244.3	246.8	-170.6	154.5	370.2
Top	3424	-8.4	-29.1	318.3	326.0	-142.6	258.9	370.2
7 RCCV	3606	-8.9	-28.7	203.5	187.8	70.7	206.6	367.8
Drywell	3613	-8.5	-28.7	109.5	165.5	79.3	71.9	367.8
Bottom	3624	-9.2	-27.7	165.6	129.7	99.5	174.6	360.2
8 RCCV	4006	-6.0	-28.7	182.7	206.4	113.9	139.3	367.8
Drywell	4013	-8.2	-28.7	131.1	174.3	87.2	125.6	367.8
Mid-Height	4976	-7.4	-27.7	177.0	144.9	184.2	142.8	360.2
9 RCCV	4406	-5.7	-28.7	110.8	180.5	199.1	88.3	367.8
Drywell	4413	-7.1	-28.7	34.3	112.1	208.9	49.9	367.8
Top	4424	-7.9	-27.7	227.5	141.9	209.3	113.7	360.2
10 Basemat	80003	-8.1	-23.2	-21.0	35.5	-19.1	35.6	370.2
@ Center	80007	-7.6	-23.2	-22.2	27.1	-20.4	28.9	370.2
	80012	-7.2	-23.2	-21.9	24.5	-21.3	24.2	370.2
11 Basemat	80206	-9.2	-23.2	73.7	46.8	-4.6	56.6	370.2
Inside	80213	-10.0	-23.2	9.1	45.0	-17.7	75.0	370.2
RPV Pedestal	80224	-6.9	-23.2	-15.6	21.6	-20.8	17.7	370.2
12 S/P Slab	83306	-9.9	-29.0	-26.1	52.0	-57.6	-34.8	369.8
@ RPV	83313	-7.9	-29.0	45.8	-65.6	156.5	349.4	369.8
	83324	-6.5	-29.0	55.9	37.7	175.0	345.8	369.8
13 S/P Slab	83406	-12.7	-29.0	-29.7	110.8	45.8	290.5	369.8
@ Center	83413	-15.1	-29.0	-40.3	81.5	34.2	251.9	369.8
	83424	-12.9	-29.0	-38.8	86.4	42.6	236.8	369.8
14 S/P Slab	83506	-8.0	-29.0	104.5	78.7	36.5	202.9	369.8
@ RCCV	83513	-25.6	-29.0	-161.4	-149.0	35.8	143.7	369.8
	83524	-5.9	-29.0	59.2	-33.7	25.9	158.9	369.8
15 Topslab	98120	-14.6	-27.9	95.4	-15.6	225.2	33.7	361.7
@ Drywell Head	98135	-4.8	-27.9	20.0	-27.8	-15.2	28.4	361.7
Opening	98104	-11.6	-27.9	8.4	-3.1	247.4	-13.5	361.7
16 Topslab	98149	-7.1	-28.0	103.5	5.5	125.6	25.4	362.7
@ Center	98170	-6.4	-28.0	255.5	50.3	261.0	24.4	362.7
	98109	-3.5	-28.0	109.9	16.9	201.7	24.2	362.7
17 Topslab	98174	-7.9	-28.0	59.4	44.4	163.9	13.4	362.7
@ RCCV	98197	-2.9	-28.0	193.5	99.6	248.5	56.1	362.7
	98103	-7.1	-28.0	128.6	56.3	142.0	29.7	362.7

Note: Negative value means compression.
Note *: RCCV, Pedestal Direction 1: Hoop Direction 2: Vertical
S/P Slab Direction 1: Radial Direction 2: Circumferential,
Top slab Direction 1: N-S Direction 2: E-W
Basemat @center Direction 1: N-S Direction 2: E-W,
Basemat Inside RPV Pedestal Direction 1: Top: Radial, Bottom: N-S Direction 2 Top: Circumferential, Bottom: E-W

Table 3G.1-32
Rebar and Concrete Stresses of RCCV: Selected Load Combination CV-11b

Location	Element ID	Concrete Stress (MPa)		Primary Reinforcement Stress (MPa)				
		Calculated	Allowable	Calculated				Allowable
				Direction 1*		Direction 2*		
				In/Top	Out/Bottom	In/Top	Out/Bottom	
1 RPV	5006	-18.3	-27.9	-90.9	-29.2	167.5	11.2	361.6
Pedestal	5013	-19.5	-27.9	-95.4	-32.9	208.6	23.2	361.6
Bottom	5024	-17.9	-27.9	-95.3	-33.6	-56.4	29.7	361.6
2 RPV	6006	-13.0	-27.9	-49.8	39.3	-53.2	122.3	361.6
Pedestal	6013	-13.7	-27.9	-53.9	22.1	-64.5	125.8	361.6
Mid-Height	6024	-14.2	-27.9	-53.0	99.9	-44.4	134.8	361.6
3 RPV	6606	-21.7	-27.9	-125.4	-78.1	-42.8	29.0	361.6
Pedestal	6613	-14.4	-27.9	-56.9	-9.0	-60.4	30.8	361.6
Top	6624	-13.3	-27.9	-14.9	158.1	-55.7	68.3	361.6
4 RCCV	1806	-17.8	-28.3	107.3	229.9	162.9	201.9	364.4
Wetwell	1813	-16.3	-28.3	51.2	211.3	134.1	190.3	364.4
Bottom	1824	-17.1	-28.3	58.1	231.7	107.4	252.1	364.4
5 RCCV	2606	-10.3	-28.2	41.1	218.9	81.2	207.0	363.8
Wetwell	2613	-11.8	-28.2	19.0	204.0	-49.5	197.9	363.8
Mid-Height	2624	-11.8	-28.2	65.3	241.8	74.4	220.8	363.8
6 RCCV	3406	-14.2	-28.2	-41.9	53.7	-47.6	167.7	363.8
Wetwell	3413	-16.8	-28.2	-9.8	112.5	-84.6	79.7	363.8
Top	3424	-9.8	-28.2	3.8	171.2	41.7	269.8	363.8
7 RCCV	3606	-16.4	-27.7	38.0	190.5	-55.0	240.1	360.2
Drywell	3613	-18.2	-27.7	-19.9	84.9	-89.8	31.5	360.2
Bottom	3624	-7.4	-26.7	121.1	192.8	141.5	281.8	352.9
8 RCCV	4006	-8.9	-27.7	61.8	277.6	-17.6	258.3	360.2
Drywell	4013	-12.9	-27.7	34.9	220.8	-51.4	143.4	360.2
Mid-Height	4976	-10.4	-26.7	40.3	205.8	-29.2	198.4	352.9
9 RCCV	4406	-6.9	-27.7	71.3	277.5	65.7	210.6	360.2
Drywell	4413	-11.3	-27.7	-18.5	154.9	118.8	47.1	360.2
Top	4424	-9.3	-26.7	29.7	225.5	83.2	204.3	352.9
10 Basemat	80003	-8.5	-23.2	77.2	62.0	80.0	66.0	370.2
@ Center	80007	-7.9	-23.2	58.1	49.7	71.1	54.6	370.2
	80012	-7.4	-23.2	36.2	45.9	74.2	46.3	370.2
11 Basemat	80206	-8.1	-23.2	172.5	67.4	15.8	84.9	370.2
Inside	80213	-9.7	-23.2	100.6	63.4	131.2	99.5	370.2
RPV Pedestal	80224	-6.7	-23.2	10.6	36.5	70.2	33.4	370.2
12 S/P Slab	83306	-16.1	-28.3	-56.4	-47.5	-49.3	113.2	364.4
@ RPV	83313	-16.5	-28.3	-52.2	-35.8	-45.4	112.9	364.4
	83324	-16.1	-28.3	-34.6	47.3	-36.9	147.9	364.4
13 S/P Slab	83406	-18.3	-28.3	-48.5	96.8	-17.0	323.2	364.4
@ Center	83413	-20.3	-28.3	-21.4	172.5	-13.8	315.3	364.4
	83424	-16.4	-28.3	-32.3	146.3	-8.8	290.4	364.4
14 S/P Slab	83506	-18.0	-28.3	49.2	144.7	-48.8	189.3	364.4
@ RCCV	83513	-13.6	-28.3	26.7	137.5	-24.2	139.3	364.4
	83524	-11.3	-28.3	-20.9	65.1	-17.4	188.4	364.4
15 Topslab	98120	-18.1	-26.2	180.3	-36.2	135.9	-20.5	349.2
@ Drywell Head	98135	-16.6	-26.2	148.1	-72.0	-12.0	7.4	349.2
Opening	98104	-18.6	-26.2	11.4	-9.0	182.9	-55.8	349.2
16 Topslab	98149	-12.7	-26.6	9.6	-34.4	269.4	7.1	352.0
@ Center	98170	-11.5	-26.6	88.0	-6.6	274.4	-6.0	352.0
	98109	-12.1	-27.2	151.7	-13.9	275.4	-17.1	356.6
17 Topslab	98174	-6.4	-26.6	-1.6	-21.8	184.9	7.3	352.0
@ RCCV	98197	-6.2	-26.6	63.3	2.7	220.7	14.8	352.0
	98103	-13.5	-27.2	172.9	-15.3	143.6	-14.3	356.6

Note: Negative value means compression.

Note *: RCCV, Pedestal — Direction 1: Hoop — Direction 2: Vertical
S/P Slab — Direction 1: Radial — Direction 2: Circumferential
Top slab — Direction 1: N-S — Direction 2: E-W
Basemat @center — Direction 1: N-S — Direction 2: E-W
Basemat Inside RPV Pedestal — Direction 1: Top: Radial Bottom: N-S — Direction 2 Top: Circumferential, Bottom: E-W

Table 3G.1-33

Transverse Shear of RCCV

Location	Element ID	LOAD ID	Shear Force Q (MN/m)	d (m)	Shear Stress (MPa)			Shear Tie Ratio (%)	
					Vu	Vc	Vs	required	provided
1 RPV	5006	CV-11b	7.50	1.99	4.44	2.89	1.55	0.386	1.010
Pedestal	5013	CV-11a	3.43	2.02	2.00	0.14	1.86	0.455	1.010
Bottom	5024	CV-7b	6.22	1.99	3.68	2.59	1.09	0.270	1.010
2 RPV	6006	CV-11b	2.02	1.94	1.23	0.91	0.32	0.081	0.252
Pedestal	6013	CV-11a	2.83	1.94	1.72	0.77	0.95	0.231	0.252
Mid-Height	6024	CV-11b	2.60	1.94	1.58	0.88	0.70	0.174	0.252
3 RPV	6606	CV-11a	3.62	1.99	2.14	0.66	1.48	0.362	1.010
Pedestal	6613	CV-7a	0.12	2.08	0.07	0.07	0.00	0.000	1.010
Top	6624	CV-11a	2.51	1.97	1.50	0.96	0.54	0.131	1.010
4 RCCV	1806	CV-11a	1.16	1.59	0.86	0.22	0.64	0.155	0.540
Wetwell	1813	CV-11a	0.85	1.59	0.63	0.23	0.40	0.097	0.540
Bottom	1824	CV-11b	0.66	1.57	0.50	0.28	0.22	0.053	0.540
5 RCCV	2606	CV-11b	0.25	1.59	0.18	0.18	0.00	0.000	0.270
Wetwell	2613	CV-11a	0.12	1.60	0.09	0.09	0.00	0.000	0.270
Mid-Height	2624	CV-7b	0.18	1.59	0.13	1.05	0.00	0.000	0.270
6 RCCV	3406	CV-7a	2.21	1.59	1.63	0.65	0.99	0.240	0.721
Wetwell	3413	CV-1	0.05	1.67	0.03	0.03	0.00	0.000	0.721
Top	3424	CV-11a	2.75	1.59	2.04	0.60	1.44	0.350	0.721
7 RCCV	3606	CV-11b	2.30	1.66	1.63	0.00	1.63	0.408	0.721
Drywell	3613	CV-7a	0.09	1.62	0.06	0.06	0.00	0.000	0.721
Bottom	3624	CV-11b	2.68	1.59	1.98	0.03	1.96	0.499	0.721
8 RCCV	4006	CV-11b	1.10	1.59	0.81	0.32	0.49	0.123	0.270
Drywell	4013	CV-11a	0.06	1.59	0.05	0.05	0.00	0.000	0.270
Mid-Height	4976	CV-11a	0.41	1.59	0.30	0.49	0.00	0.000	0.270
9 RCCV	4406	CV-11b	1.44	1.59	1.07	0.28	0.79	0.196	0.540
Drywell	4413	CV-11a	0.20	1.67	0.14	0.14	0.00	0.000	0.540
Top	4424	CV-7b	1.39	1.54	1.06	0.92	0.15	0.038	0.540
10 Basemat	80003	CV-11b	0.92	3.54	0.31	0.86	0.00	0.000	0.179
@ Center	80007	CV-11b	1.00	3.53	0.33	0.91	0.00	0.000	0.179
	80012	CV-11b	1.12	3.53	0.37	0.99	0.00	0.000	0.179
11 Basemat	80206	CV-11b	4.23	4.63	1.08	1.57	0.00	0.000	1.290
Inside	80213	CV-11b	4.74	4.61	1.21	1.07	0.14	0.034	1.290
RPV Pedestal	80224	CV-11b	3.96	4.65	1.00	1.78	0.00	0.000	1.290
12 S/P Slab	83306	CV-11a	4.24	1.53	3.27	2.38	0.89	0.217	1.140
@ RPV	83313	CV-7a	4.69	1.76	3.14	2.38	0.76	0.185	1.140
	83324	CV-7a	4.62	1.76	3.10	2.34	0.76	0.184	1.140
13 S/P Slab	83406	CV-1	0.13	1.76	0.08	0.08	0.00	0.000	0.263
@ Center	83413	CV-1	0.12	1.76	0.07	0.07	0.00	0.000	0.263
	83424	CV-1	0.16	1.76	0.09	0.09	0.00	0.000	0.263
14 S/P Slab	83506	CV-7a	4.35	1.53	3.36	2.07	1.28	0.312	1.010
@ RCCV	83513	CV-7b	4.12	1.76	2.76	1.90	0.87	0.214	1.010
	83524	CV-7a	5.61	1.53	4.33	2.10	2.23	0.542	1.010
15 Topslab	98120	CV-1	0.91	1.94	0.47	1.11	0.00	0.000	0.358
@ Drywell Head	98135	CV-7b	1.95	1.95	1.18	1.95	0.00	0.000	0.358
Opening	98104	CV-7b	3.21	1.93	1.96	1.50	0.46	0.118	0.358
16 Topslab	98149	CV-11b	1.28	1.99	0.76	0.52	0.23	0.060	0.179
@ Center	98170	CV-1	0.14	1.94	0.07	0.07	0.00	0.000	0.179
	98109	CV-1	0.27	1.99	0.14	0.14	0.00	0.000	0.179
17 Topslab	98174	CV-1	0.28	1.96	0.14	0.14	0.00	0.000	0.179
@ RCCV	98197	CV-7b	1.97	1.96	1.19	0.79	0.40	0.101	0.717
	98103	CV-11b	1.56	1.91	0.96	1.01	0.00	0.000	0.717

Table 3G.1-34

Tangential Shear of RCCV

Location	Element ID	Load ID	Section Forces			Thickness	Rebar Area (cm^2/m)		rAs/pAs	v_{so} (MPa)		v_u (MPa)	
			Nx/Ny (MN/m)	Nxl/Nyl (MN/m)	V (MN/m)	t (m)	Required rAs	Provided pAs		Calculated	Allowable	Calculated	Allowable $0.4f_c'-v_{so}$
1 RPV Pedestal Bottom	5006	CV-11a	-5.215	5.463	2.534	2.40	21.9	431.3	0.051	1.06	4.83	1.06	12.46
		CV-11a	-5.424	-9.956	-2.534	2.40	131.8	724.8	0.182	1.06	4.83	1.06	12.46
	5013	CV-11a	-5.375	-5.801	-1.662	2.40	17.9	431.3	0.042	0.69	4.83	0.69	12.82
		CV-11a	-5.735	-13.595	-1.662	2.40	216.4	724.8	0.299	0.69	4.83	0.69	12.82
	5024	CV-11a	-5.523	3.414	-3.359	2.40	-19.9	431.3	-0.046	1.40	4.83	1.40	12.12
		CV-11a	-5.151	-9.187	3.359	2.40	125.9	724.8	0.174	1.40	4.83	1.40	12.12
2 RPV Pedestal Mid-Height	6006	CV-11a	0.847	1.197	3.269	2.40	117.7	431.3	0.273	1.36	4.83	1.36	12.16
		CV-11a	-5.047	-6.716	3.269	2.40	65.8	543.6	0.121	1.36	4.83	1.36	12.16
	6013	CV-11a	0.434	1.502	1.761	2.40	74.7	431.3	0.173	0.73	4.83	0.73	12.78
		CV-11a	-5.386	-7.754	1.761	2.40	69.7	543.6	0.128	0.73	4.83	0.73	12.78
	6024	CV-11a	0.529	-1.071	5.128	2.40	156.8	431.3	0.364	2.14	4.83	2.14	11.38
		CV-11a	-3.050	-5.458	-5.128	2.40	120.7	543.6	0.222	2.14	4.83	2.14	11.38
3 RPV Pedestal Top	6606	CV-11a	21.310	1.821	2.838	2.40	670.9	602.4	1.114	1.18	4.83	1.18	12.33
		CV-11a	-3.349	4.992	-2.838	2.40	65.1	543.6	0.120	1.18	4.83	1.18	12.33
	6613	CV-11a	21.130	-2.587	1.302	2.40	653.1	602.4	1.084	0.54	4.83	0.54	12.97
		CV-11a	-3.740	5.376	1.302	2.40	48.7	543.6	0.090	0.54	4.83	0.54	12.97
	6624	CV-11a	22.450	-1.796	-3.408	2.40	715.0	602.4	1.187	1.42	4.83	1.42	12.10
		CV-11a	-2.826	5.643	-3.408	2.40	102.4	543.6	0.188	1.42	4.83	1.42	12.10
4 RCCV Wetwell Bottom	1806	CV-11a	2.459	2.258	-6.054	2.00	241.3	474.0	0.509	3.03	4.85	3.03	10.61
		CV-11a	-2.674	7.237	6.054	2.00	182.9	584.0	0.313	3.03	4.85	3.03	10.61
	1813	CV-11a	1.926	1.686	-4.807	2.00	189.9	474.0	0.401	2.40	4.85	2.40	11.23
		CV-11a	-4.816	8.594	4.807	2.00	136.1	584.0	0.233	2.40	4.85	2.40	11.23
	1824	CV-11a	3.097	-1.402	7.151	2.00	280.8	474.0	0.592	3.58	4.85	3.58	10.06
		CV-11a	-5.384	-7.837	-7.151	2.00	141.3	584.0	0.242	3.58	4.85	3.58	10.06

Note : Top and bottom lines for each element indicate evaluation results for hoop and vertical rebars, respectively.

Nomenclature:

Nx, Ny: axial forces in the hoop and vertical directions due to pressure and dead loads, respectively

Nxl, Nyl: axial forces in the hoop and vertical directions due to lateral loads, respectively

V: tangential shear due to lateral loads

v_{so}: tangential shear stress borne by orthogonal rebars (Refer to Table 3.8-3.)

Table 3G.1-34

Tangential Shear of RCCV (Continued)

Location	Element ID	Load ID	Section Forces			Thickness	Rebar Area (cm^2/m)		rAs/pAs	v_{so} (MPa)		v_u (MPa)	
			Nx/Ny (MN/m)	Nxl/Nyl (MN/m)	V (MN/m)	t (m)	Required rAs	Provided pAs		Calculated	Allowable	Calculated	Allowable $0.4f_c'-v_{so}$
5 RCCV Wetwell Mid-Height	2606	CV-11a	3.212	1.053	-5.695	2.00	243.2	518.0	0.469	2.85	4.85	2.85	10.82
		CV-11a	-2.149	5.645	5.695	2.00	158.5	519.0	0.305	2.85	4.85	2.85	10.82
	2613	CV-11a	1.970	-1.390	4.710	2.00	185.9	518.0	0.359	2.35	4.85	2.35	11.31
		CV-11a	-4.878	6.891	4.710	2.00	93.7	519.0	0.181	2.35	4.85	2.35	11.31
	2624	CV-11a	2.981	1.100	-6.534	2.00	259.5	518.0	0.501	3.27	4.85	3.27	10.40
		CV-11a	-5.395	6.525	6.534	2.00	103.7	519.0	0.200	3.27	4.85	3.27	10.40
6 RCCV Wetwell Top	3406	CV-11a	12.270	-0.890	-5.123	2.00	471.9	732.0	0.645	2.56	4.85	2.56	11.11
		CV-11a	-1.121	4.244	-5.123	2.00	149.4	519.0	0.288	2.56	4.85	2.56	11.11
	3413	CV-11a	9.959	-0.833	-4.355	2.00	388.8	732.0	0.531	2.18	4.85	2.18	11.49
		CV-11a	-5.076	-5.818	4.355	2.00	59.2	519.0	0.114	2.18	4.85	2.18	11.49
	3424	CV-11a	12.970	0.780	5.796	2.00	508.3	732.0	0.694	2.90	4.85	2.90	10.77
		CV-11a	-6.242	5.319	-5.796	2.00	43.9	519.0	0.085	2.90	4.85	2.90	10.77
7 RCCV Drywell Bottom	3606	CV-11a	8.869	-0.850	4.838	2.00	374.7	732.0	0.512	2.42	4.82	2.42	11.09
		CV-11a	-0.303	-4.017	-4.838	2.00	162.7	519.0	0.314	2.42	4.82	2.42	11.09
	3613	CV-11a	6.543	-0.890	-4.051	2.00	290.6	732.0	0.397	2.03	4.82	2.03	11.49
		CV-11a	-5.059	-5.672	4.051	2.00	52.0	519.0	0.100	2.03	4.82	2.03	11.49
	3624	CV-11a	-1.503	-0.717	5.484	2.00	111.8	732.0	0.153	2.74	4.74	2.74	10.28
		CV-11a	-7.889	5.133	-5.484	2.00	-10.5	519.0	-0.020	2.74	4.74	2.74	10.28
8 RCCV Drywell Mid-Height	4006	CV-11a	6.865	-1.685	4.463	2.00	316.3	518.0	0.611	2.23	4.82	2.23	11.28
		CV-11a	0.325	3.274	-4.463	2.00	159.3	519.0	0.307	2.23	4.82	2.23	11.28
	4013	CV-11a	5.737	-1.361	-3.907	2.00	268.4	518.0	0.518	1.95	4.82	1.95	11.56
		CV-11a	-6.359	-5.125	3.907	2.00	2.3	519.0	0.004	1.95	4.82	1.95	11.56
	4976	CV-11a	-0.868	-0.691	5.752	2.00	136.7	518.0	0.264	2.88	4.74	2.88	10.14
		CV-11a	-7.229	-4.391	5.752	2.00	0.2	519.0	0.000	2.88	4.74	2.88	10.14
9 RCCV Drywell Top	4406	CV-11b	6.052	-1.918	3.779	2.00	285.7	518.0	0.551	1.89	4.74	1.89	11.13
		CV-11a	-0.692	-2.901	3.779	2.00	110.7	519.0	0.213	1.89	4.82	1.89	11.62
	4413	CV-11a	2.288	-1.407	-3.363	2.00	161.3	518.0	0.311	1.68	4.82	1.68	11.83
		CV-11a	-7.150	-4.833	3.363	2.00	-34.3	519.0	-0.066	1.68	4.82	1.68	11.83
	4424	CV-11a	-4.353	0.966	-5.943	2.00	46.3	430.0	0.108	2.97	4.74	2.97	10.05
		CV-11a	-6.413	-3.925	5.943	2.00	19.7	476.0	0.041	2.97	4.74	2.97	10.05

Table 3G.1-35

Containment Liner Plate Strains (Max)

Category	Calculated Strain					Allowable Tension Allowable Compression
	Cylinder	Pedestal	DW Bottom	WW Bottom	Top Slab	
Test	0.0004 -0.0012	0.0004 -0.0006	0.0000 -0.0001	0.0002 -0.0002	0.0003 -0.0001	0.002 -0.002
Normal Operation	0.0005 -0.0008	0.0005 -0.0010	0.0001 -0.0003	0.0004 -0.0006	0.0002 -0.0005	0.002 -0.002
Severe Environment	0.0005 -0.0008	0.0005 -0.0010	0.0001 -0.0003	0.0004 -0.0006	0.0002 -0.0005	0.003 -0.005
Extreme Environment	0.0005 -0.0008	0.0005 -0.0010	0.0001 -0.0003	0.0004 -0.0006	0.0002 -0.0005	0.003 -0.005
Abnormal; LOCA	0.0007 -0.0034	0.0005 -0.0028	0.0001 -0.0003	0.0004 -0.0022	0.0006 -0.0017	0.003 -0.005
Abnormal/Extreme Environment	0.0014 -0.0041	0.0007 -0.0030	0.0002 -0.0004	0.0009 -0.0026	0.0008 -0.0019	0.003 -0.005

Table 3G.1-35

Containment Liner Plate Strains (Max) (Continued)

Category	Calculated Strain		Allowable Tension Allowable Compression
	D/F Thick Plate	Pedestal Thick Plate	
Test	0.0005 -0.0002	0.0002 -0.0002	0.002 -0.002
Normal Operation	0.0002 -0.0005	0.0002 -0.0007	0.002 -0.002
Severe Environment	0.0002 -0.0005	0.0002 -0.0007	0.003 -0.005
Extreme Environment	0.0002 -0.0005	0.0002 -0.0007	0.003 -0.005
Abnormal; LOCA	0.0008 -0.0017	0.0003 -0.0021	0.003 -0.005
Abnormal/Extreme Environment	0.0009 -0.0017	0.0004 -0.0022	0.003 -0.005

Table 3G.1-36

Drywell Head Elements Stress Summary

Service Level	PL		PL+Pb		PL+Pb+Q	
	Calculated Stress (MPa)	Allowable Stress (MPa)	Calculated Stress (MPa)	Allowable Stress (MPa)	Calculated Stress (MPa)	Allowable Stress (MPa)
Test Condition	77	262	77	262	-	-
Design Condition	66	227	66	227	-	-
A, B	78	227	78	227	797*1	456
C	103	342	103	342	-	-
D	103	430	103	430	-	-

*1 Acceptable by meeting all requirements for simplified elastic-plastic analysis stipulated in NE-3228.3 of ASME B&PV Code, Sec. III.

Table 3G.1-37

Diaphragm Floor (D/F) Slab Elements Stress Summary

Structural Elements	Member Size	Governing Load Combination	Stress or Stress Ratio	Allowable Stress	Acceptance Criteria*2
Top Plate*1	25mm	Normal	σmin = -214MPa	σ = 261MPa	1.0S
		Normal	τmax = 107MPa	τ = 174MPa	1.0S
Bottom Plate	25mm	Normal	σmax = 202MPa	σ = 272MPa	1.0S
		Normal	τmax = 101MPa	τ = 181MPa	1.0S
Radial Web	25mm	Abnormal	σmin = -343MPa	σ = 391MPa	1.5S
Plate (Upper Web)		Normal	τmax = 168MPa	τ = 174MPa	1.0S
Radial Web	25mm	Normal	σmin = -229MPa	σ = 261MPa	1.0S
Plate (Lower Web)*1		Abnormal/Extreme	τmax = 224MPa	τ = 253MPa	1.4S
Tangential	25mm	Abnormal	σmin = -334MPa	σ = 391MPa	1.5S
Web Plate		Abnormal/Extreme	τmax = 201MPa	τ = 243MPa	1.4S
Bottom Flange*1	38mm	Normal	σmin = -186MPa	σ = 269MPa	1.0S
		Normal	τmax = 93MPa	τ = 181MPa	1.0S

*1 Thermal stress associated with extreme and abnormal load conditions meets deformation limits of AISC N690 Subsection Q1.5.7.2. The total stress excluding thermal stress satisfies the allowable stress limit in Table Q1.5.7.1 of AISC N690.

*2 S = Allowable stress limit specified in part 1 of AISC N690.

Table 3G.1-38

Diaphragm Floor (D/F) Slab Anchorage Structural Capacity

Anchor Locations	Governing Load Combination	Design Load (kN)	No. of Anchor Bars Provided	Total Capacity (kN)	Acceptance Criteria*1
Top Plate	Normal (SIT)	736/deg	1-#18 @ 0.9 deg	782/deg	0.66Fy
Bottom Plate	Normal	151/deg	1-#18 @ 0.9 deg	592/deg	0.5Fy
Girder Radial Web Plate	Abnormal/Extreme	3418	5-#18	4804	0.9Fy
Girder Bottom Flange	Abnormal/Extreme	1020	5-#18	4804	0.9Fy

*1 F_y = Specified minimum yield stress.

Table 3G.1-39

Vent Wall Structural Elements Stress Summary

Structural Elements	Member Size	Governing Load Combination	Calculated Stress	Allowable Stress	Acceptance Criteria*1
Inner Cylinder	25mm	Abnormal/Extreme Abnormal/Extreme	σmin= -221MPa τmax= 139MPa	σ = 417MPa τ = 243MPa	1.6S 1.4S
Outer Cylinder	25mm	Abnormal/Extreme Abnormal/Extreme	σmin = -239MPa τmax = 139MPa	σ = 435MPa τ = 253MPa	1.6S 1.4S
Radial Web Plate	25mm	Abnormal Abnormal/Extreme	σmin = -263MPa τmax = 173MPa	σ = 391MPa τ = 243MPa	1.5S 1.4S

*1 S = Allowable stress limit specified in part 1 of AISC N690.

Table 3G.1-40

Reactor Shield Wall (RSW) Structural Element Stress Summary

Structural Element	Member Size	Governing Load Combination	Calculated Stress	Allowable	Acceptance Criteria*1
RSW	210mm	Abnormal	σ_{min} = -277MPa	σ = 391MPa	1.5S
Cylindrical Shell	210mm	Abnormal/Extreme	τ_{max} = 145MPa	τ = 243MPa	1.4S

*1 S = Allowable stress limit specified in part 1 of AISC N690.

Table 3G.1-41

RPV Support Bracket Structural Elements Stress Summary

Structural Elements	Member Size	Governing Load Combination	Stress or Stress Ratio	Allowable Stress	Acceptance Criteria*1
Horizontal Plate	100mm 150mm	Abnormal/Extreme Severe	σmin = -191MPa τmax = 45MPa	σ = 417MPa τ = 94MPa	1.6S 1.0S
Vertical Plate	150mm 150mm	Abnormal/Extreme Abnormal/Extreme	σmin = -164MPa τmax = 98MPa	σ = 225MPa τ = 131MPa	1.6S 1.4S

*1 S = Allowable stress limit specified in Part 1 of AISC N690.

Table 3G.1-42

Vent Wall and RPV Support Bracket Anchorage Structural Capacity

Anchor Locations	Governing Load Combination	Design Load (kN)	No. of Anchor Bars Provided	Total Capacity (kN)	Acceptance Criteria*1
Vent Wall	Abnormal/Extreme	1365/deg	4-#18 @ 1.8deg	2112/deg	0.9Fy
RPV Support Bracket	Abnormal/Extreme	33185	72-#18	69178	0.9Fy

*1 Fy = Specified minimum yield stress.

Table 3G.1-43

GDCS Pool Structural Elements Stress Summary

Structural Elements	Member Size	Governing Load Combination	Stress or Stress Ratio	Allowable Stress	Acceptance Criteria*1
Wall Plate	16mm	Abnormal Abnormal/Extreme	σ_{min}= -371MPa τ_{max}= 203MPa	σ = 391MPa τ = 243MPa	1.5S 1.4S
Vertical Column	550x550x25	Severe Severe	Ratio = 0.56 τ = 51MPa	Ratio = 1.0 τ = 174MPa	1.0S 1.0S
Vertical Column	800x800x65	Abnormal Severe	Ratio = 0.44 τ = 33MPa	Ratio = 1.0 τ = 174MPa	1.5S 1.0S
Horizontal Member	450x450x25	Abnormal/Extreme Abnormal/Extreme	Ratio = 0.44 τ = 27MPa	Ratio = 1.0 τ = 243MPa	1.6S 1.4S
Bracing Member	350x350x35	Severe Abnormal/Extreme	Ratio = 0.44 τ = 29MPa	Ratio = 1.0 τ = 243MPa	1.0S 1.4S

*1 S = Allowable stress limit specified in Part 1 of AISC N690.

Table 3G.1-44

GDCS Pool Anchorage Structural Capacity

Anchor Locations	Governing Load Combination	Design Load/Anchor Bar (kN)	Capacity/Anchor Bar (kN)	Acceptance Criteria*1
Bracing Members @ RCCV Wall	Abnormal/Extreme	657	960	0.9Fy
Horizontal Members @ RCCV Wall	Abnormal/Extreme	711	960	0.9Fy

*1 F_y = Specified minimum yield stress.

Table 3G.1-45

Combined Forces and Moments: RB, Selected Load Combination RB-4

Location	Element ID		Nx (MN/m)	Ny (MN/m)	Nxy (MN/m)	Mx (MNm/m)	My (MNm/m)	Mxy (MNm/m)	Qx (MN/m)	Qy (MN/m)
18 Wall Below RCCV Bottom	6	OTHR	-1.555	-7.556	-0.217	-0.203	-1.484	-0.004	0.000	-0.343
		TEMP	1.628	-0.267	-0.739	0.099	1.178	-0.043	0.016	0.044
	13	OTHR	-1.526	-5.797	-0.069	-0.547	-2.894	0.007	-0.004	-0.800
		TEMP	0.500	-3.267	-0.851	0.466	2.640	-0.003	0.023	0.576
	24	OTHR	-1.088	-6.308	-0.198	-0.613	-3.706	0.000	0.001	-1.245
		TEMP	0.791	-3.390	0.142	0.480	2.679	-0.006	-0.001	0.596
19 Wall Below RCCV Mid-Height	806	OTHR	-1.570	-6.314	-0.142	-0.008	-0.036	-0.031	-0.016	-0.096
		TEMP	1.438	-1.233	0.113	0.162	1.001	0.089	-0.059	0.052
	813	OTHR	-2.077	-5.627	0.100	-0.040	0.060	-0.009	-0.004	-0.081
		TEMP	0.801	-3.203	-0.655	0.112	1.009	-0.029	0.009	0.603
	824	OTHR	-2.350	-6.245	-0.080	0.118	0.441	0.012	-0.001	0.099
		TEMP	0.618	-3.509	0.100	0.129	1.019	0.019	0.011	0.540
20 Wall Below RCCV Top	1606	OTHR	-1.034	-5.635	0.064	0.044	0.266	0.031	0.007	-0.191
		TEMP	9.010	-2.016	0.181	-0.500	-2.273	0.101	0.089	1.713
	1613	OTHR	-1.230	-5.399	0.236	0.018	0.253	-0.001	-0.002	-0.190
		TEMP	8.724	-3.628	-0.531	-0.636	-3.693	-0.004	-0.014	2.219
	1624	OTHR	-0.815	-5.802	-0.021	-0.015	-0.191	0.005	-0.008	0.003
		TEMP	9.355	-4.562	-0.137	-0.712	-3.632	-0.005	-0.066	2.268
21 Exterior Wall @ EL-11.50 ~-10.50m	20011	OTHR	-2.253	-3.856	-0.807	0.095	0.681	0.010	0.046	0.221
		TEMP	3.715	3.601	0.919	0.284	1.218	0.038	-0.186	0.357
	20023	OTHR	-1.511	-1.520	-0.589	-0.013	-0.247	0.020	-0.032	-0.138
		TEMP	-1.892	-1.622	2.144	2.538	5.046	0.244	0.376	0.822
	30010	OTHR	-1.694	-2.495	-0.259	-0.332	-1.767	0.015	0.002	1.168
		TEMP	0.175	2.955	-0.157	1.319	4.158	-0.022	-0.030	-0.727
	30020	OTHR	-1.290	-1.597	-0.210	-0.698	-0.856	0.025	-0.256	0.369
		TEMP	-0.154	-1.324	-0.285	0.170	1.409	0.142	-0.039	-0.357
	40001	OTHR	-0.998	-1.836	0.308	-0.425	-1.297	-0.265	0.133	0.769
		TEMP	-0.205	-0.878	-0.095	0.220	1.540	-0.094	0.145	-0.398
	40011	OTHR	-1.637	-3.392	-0.032	-0.397	-2.272	-0.004	0.007	2.058
		TEMP	1.019	3.116	0.054	1.305	4.252	0.008	0.014	-0.766
22 Exterior Wall @ EL-4.65 ~-6.60m	22011	OTHR	-0.238	-3.253	0.761	-0.005	0.070	0.012	-0.024	0.113
		TEMP	2.586	3.076	-0.119	-0.101	-0.086	0.038	0.020	0.147
	22023	OTHR	-0.107	-1.767	0.024	0.006	0.018	-0.065	0.073	0.020
		TEMP	2.357	-5.300	-2.630	-0.374	0.466	-0.053	0.922	0.549
	32010	OTHR	-0.381	-2.072	0.000	-0.025	-0.085	0.000	0.001	-0.009
		TEMP	16.055	7.706	0.016	-3.506	-3.286	-0.003	-0.003	-0.226
	32020	OTHR	-0.049	-1.912	-0.003	-0.099	-0.076	-0.017	-0.039	0.020
		TEMP	0.404	5.236	2.974	-0.744	-2.379	-0.509	0.936	0.144
	42001	OTHR	-0.038	-2.000	-0.034	-0.085	-0.111	0.058	0.032	0.054
		TEMP	2.925	3.711	3.106	-0.956	-2.146	-0.063	-0.860	-0.349
	42011	OTHR	-0.559	-2.719	-0.051	-0.035	-0.167	0.003	0.006	0.024
		TEMP	13.976	5.189	0.082	-3.633	-3.196	0.101	0.088	-0.115
23 Exterior Wall @ EL22.50 ~24.60m	24211	OTHR	-0.233	-1.964	0.122	-0.078	-0.523	0.004	-0.004	-0.047
		TEMP	3.696	2.547	-0.486	-0.016	0.049	0.013	-0.150	2.136
	24224	OTHR	-0.025	-1.202	0.368	0.064	-0.039	-0.047	-0.089	-0.025
		TEMP	0.155	4.828	-4.303	0.833	-0.313	-0.715	-0.808	-0.293
	34210	OTHR	-0.027	-0.876	0.015	-0.003	-0.054	0.001	0.003	0.001
		TEMP	17.402	5.781	-0.557	-3.633	-3.490	0.035	-0.012	-0.199
	34220	OTHR	0.042	-0.946	-0.187	0.044	-0.032	-0.008	0.047	0.002
		TEMP	2.056	4.894	2.979	0.866	-2.104	-0.558	1.943	0.152
	44201	OTHR	0.037	-1.119	-0.345	0.048	-0.014	0.018	-0.042	-0.003
		TEMP	1.125	5.799	-0.132	0.393	-2.344	0.550	-2.362	0.138

OTHR: Loads other than thermal loads
TEMP: Thermal loads

Table 3G.1-45

Combined Forces and Moments: RB, Selected Load Combination RB-4 (Continued)

Location	Element ID		Nx (MN/m)	Ny (MN/m)	Nxy (MN/m)	Mx (MNm/m)	My (MNm/m)	Mxy (MNm/m)	Qx (MN/m)	Qy (MN/m)
24 Basemat @ Wall Below RCCV	90140	OTHR	-4.104	-3.415	-0.092	-2.171	-1.139	2.657	-2.118	1.895
		TEMP	1.347	1.833	1.711	1.409	0.026	-1.327	-0.666	-0.175
	90182	OTHR	-3.771	-3.257	-0.029	0.477	-2.537	-0.110	0.012	0.534
		TEMP	1.856	0.556	0.778	-0.094	-4.006	0.225	-0.199	3.084
	90111	OTHR	-5.053	-3.293	0.000	-3.338	0.350	-0.364	0.094	0.137
		TEMP	0.687	3.065	-0.002	-4.393	-0.535	0.044	3.217	0.151
25 Slab EL4.65m @ RCCV	93140	OTHR	-0.520	-0.089	0.153	0.055	0.084	-0.060	0.132	-0.109
		TEMP	-0.966	2.070	3.424	-0.522	-0.407	0.286	-0.137	0.110
	93182	OTHR	-0.134	-0.248	0.040	0.007	0.001	0.002	-0.003	-0.051
		TEMP	3.050	-3.501	-1.013	-0.380	-1.928	-0.084	0.079	1.425
	93111	OTHR	-0.318	0.071	0.026	-0.068	-0.008	-0.003	0.012	-0.005
		TEMP	-3.104	3.895	-0.106	-1.892	-0.348	-0.048	1.246	0.002
26 Slab EL17.5m @ RCCV	96144	OTHR	-0.093	0.182	0.208	0.054	0.075	-0.058	0.129	-0.102
		TEMP	0.051	3.471	3.892	-0.198	-0.171	0.135	-0.037	0.056
	96186	OTHR	0.286	-0.076	0.012	-0.011	-0.044	-0.004	-0.001	-0.011
		TEMP	3.507	-2.461	-1.416	-0.131	-0.625	-0.042	0.023	0.503
	96113	OTHR	-0.058	0.660	-0.014	-0.274	-0.011	-0.013	0.300	0.036
		TEMP	-5.649	-4.999	-0.952	-4.725	-3.463	-0.182	0.956	-0.039
27 Slab EL27.0m @ RCCV	98472	OTHR	0.456	0.111	0.049	0.159	0.240	-0.199	0.229	-0.253
		TEMP	-0.639	-1.108	5.881	-0.552	-0.184	-0.203	0.423	-0.561
	98514	OTHR	0.049	0.183	0.074	0.024	0.057	0.025	-0.003	-0.136
		TEMP	-0.752	-3.184	-1.455	-0.689	-0.528	-0.028	0.049	-0.488
	98424	OTHR	-0.098	0.483	-0.015	1.858	0.440	0.008	-1.199	-0.094
		TEMP	-11.294	-12.507	-1.614	0.502	-0.662	0.174	-6.706	-0.088
28 Pool Girder @ Storage Pool	123054	OTHR	0.400	-2.583	-0.849	0.048	0.031	0.055	-0.011	-0.032
		TEMP	0.751	-3.964	1.802	2.885	2.797	0.041	-0.399	0.710
	123154	OTHR	1.277	-0.549	-0.660	0.078	0.032	0.101	0.018	0.011
		TEMP	1.146	0.864	-0.343	2.404	1.445	-0.430	-0.139	0.303
29 Pool Girder @ Cavity	123062	OTHR	0.465	0.628	0.344	-0.027	-0.178	0.030	0.002	-0.096
		TEMP	-3.702	-0.209	-0.675	0.125	0.180	0.046	-0.120	0.099
	123162	OTHR	-1.564	0.164	0.198	-0.079	-0.064	0.025	0.095	0.042
		TEMP	-3.313	-0.169	-0.673	0.094	-0.259	0.073	-0.235	0.126
30 Pool Girder @ Fuel Pool	123067	OTHR	0.510	-2.451	1.525	0.019	-0.049	-0.077	-0.126	-0.061
		TEMP	-3.957	-6.147	-2.164	0.701	0.523	-0.099	-0.149	0.671
	123167	OTHR	0.520	-0.620	1.330	0.043	0.025	0.019	-0.034	0.011
		TEMP	-3.687	-3.040	-2.757	0.227	-0.680	-0.298	0.028	0.199
31 MS Tunnel Wall and Slab	150122	OTHR	-0.024	0.030	0.299	0.026	0.060	0.018	-0.011	-0.040
		TEMP	0.347	-0.696	2.372	1.402	4.093	-0.043	-0.760	0.539
	96611	OTHR	-0.008	0.285	-0.012	0.078	-0.047	-0.051	-0.081	0.016
		TEMP	-0.316	3.589	-0.223	-1.462	-8.773	-0.478	0.477	0.241
	98614	OTHR	-0.022	-0.160	-0.020	0.019	-0.556	-0.067	-0.059	0.031
		TEMP	-0.229	2.949	-0.177	-0.935	-13.249	0.048	0.556	0.370

Table 3G.1-46

Combined Forces and Moments: RB, Selected Load Combination RB-8a

Location	Element ID		Nx (MN/m)	Ny (MN/m)	Nxy (MN/m)	Mx (MNm/m)	My (MNm/m)	Mxy (MNm/m)	Qx (MN/m)	Qy (MN/m)
18 Wall Below RCCV Bottom	6	OTHR	-1.541	-5.995	-0.270	0.038	-0.070	-0.006	0.004	0.093
		TEMP	1.177	-0.473	-0.669	0.101	1.063	-0.040	0.024	0.044
		HYDR	1.039	2.403	0.505	0.296	1.689	0.004	0.014	0.592
	13	OTHR	-1.447	-4.554	-0.005	-0.261	-1.275	0.006	-0.005	-0.316
		TEMP	0.307	-3.027	-0.689	0.408	2.284	-0.002	0.019	0.475
		HYDR	0.829	2.427	0.515	0.223	1.312	0.006	0.011	0.454
	24	OTHR	-1.294	-4.939	-0.149	-0.302	-1.843	-0.002	0.003	-0.634
		TEMP	0.412	-3.041	0.146	0.425	2.350	-0.005	-0.002	0.516
		HYDR	0.902	2.658	0.484	0.159	1.002	0.005	0.010	0.355
19 Wall Below RCCV Mid-Height	806	OTHR	-1.097	-4.803	-0.222	0.011	0.064	-0.019	-0.014	-0.066
		TEMP	1.601	-1.332	0.182	0.235	1.292	0.083	-0.053	-0.063
		HYDR	0.305	2.384	0.674	0.023	0.125	0.031	0.004	0.037
	813	OTHR	-1.488	-4.507	0.140	-0.014	0.141	-0.005	0.004	-0.021
		TEMP	1.036	-2.990	-0.508	0.175	1.290	-0.027	0.006	0.450
		HYDR	0.236	2.472	0.691	0.032	0.124	0.010	0.003	0.108
	824	OTHR	-1.773	-4.807	-0.044	0.110	0.418	0.009	-0.001	0.111
		TEMP	0.890	-3.046	0.126	0.176	1.306	0.019	0.010	0.396
		HYDR	0.259	2.709	0.633	0.018	0.131	0.014	0.002	0.067
20 Wall Below RCCV Top	1606	OTHR	-0.020	-4.191	-0.098	-0.227	-1.320	0.024	0.005	0.308
		TEMP	11.606	-2.042	0.301	-0.668	-3.250	0.099	0.085	2.306
		HYDR	0.777	2.430	0.657	0.469	2.639	0.013	0.006	0.763
	1613	OTHR	-0.209	-4.449	0.240	-0.255	-1.334	-0.003	-0.003	0.337
		TEMP	11.229	-3.474	-0.425	-0.785	-4.386	-0.008	-0.014	2.714
		HYDR	0.778	2.470	0.668	0.471	2.727	0.006	0.008	0.829
	1624	OTHR	0.194	-4.340	-0.003	-0.290	-1.766	0.006	-0.006	0.516
		TEMP	12.187	-3.970	-0.124	-0.867	-4.480	-0.001	-0.082	2.817
		HYDR	0.851	2.674	0.650	0.462	2.630	0.005	0.011	0.811
21 Exterior Wall @ EL-11.50 ~-10.50m	20011	OTHR	-1.786	-3.310	-0.710	0.179	0.942	0.018	0.034	0.304
		TEMP	3.023	3.384	0.790	0.274	1.136	0.041	-0.173	0.330
		HYDR	0.191	0.270	0.760	0.386	1.573	0.014	0.039	0.580
	20023	OTHR	-1.159	-1.475	-0.593	-0.019	-0.237	0.012	-0.056	-0.136
		TEMP	-1.459	-1.215	1.590	1.936	3.930	0.184	0.310	0.647
		HYDR	0.020	0.657	0.152	0.101	0.146	0.015	0.119	0.091
	30010	OTHR	-1.174	-2.306	-0.176	-0.180	-1.014	0.008	0.001	0.837
		TEMP	0.421	2.641	-0.135	1.081	3.585	-0.018	-0.024	-0.601
		HYDR	0.586	0.260	0.326	0.183	0.969	0.003	0.007	0.246
	30020	OTHR	-0.955	-1.661	-0.238	-0.553	-0.771	0.023	-0.150	0.328
		TEMP	-0.090	-1.196	-0.238	0.081	1.104	0.123	-0.022	-0.270
		HYDR	0.044	0.862	0.222	0.037	0.180	0.008	0.062	0.056
	40001	OTHR	-0.752	-1.827	0.378	-0.339	-1.072	-0.200	0.069	0.624
		TEMP	-0.154	-0.831	0.014	0.123	1.237	-0.081	0.114	-0.310
		HYDR	0.044	0.888	0.191	0.062	0.164	0.008	0.065	0.045
	40011	OTHR	-1.363	-3.011	-0.029	-0.221	-1.366	0.000	0.005	1.511
		TEMP	0.865	2.785	0.044	1.075	3.674	0.007	0.012	-0.638
		HYDR	0.433	0.497	0.386	0.121	0.626	0.007	0.011	0.150

OTHR: Loads other than thermal and hydrodynamic loads
TEMP: Thermal loads
HYDR: Hydrodyanmic loads

Table 3G.1-46

Combined Forces and Moments: RB, Selected Load Combination RB-8a (Continued)

Location	Element ID		Nx (MN/m)	Ny (MN/m)	Nxy (MN/m)	Mx (MNm/m)	My (MNm/m)	Mxy (MNm/m)	Qx (MN/m)	Qy (MN/m)
22 Exterior Wall @ EL-4.65 ~-6.60m	22011	OTHR	0.233	-2.716	0.620	-0.004	0.110	0.013	-0.025	0.152
		TEMP	3.577	2.789	-0.075	-0.128	-0.161	0.049	0.032	-0.031
		HYDR	0.300	1.068	0.853	0.018	0.123	0.027	0.004	0.227
	22023	OTHR	-0.055	-1.615	-0.034	0.086	0.042	-0.074	0.041	0.008
		TEMP	1.984	-3.558	-1.991	0.092	0.423	-0.047	0.570	0.405
		HYDR	0.070	0.603	0.422	0.133	0.046	0.037	0.042	0.015
	32010	OTHR	0.202	-1.854	0.031	-0.019	0.017	0.007	0.000	-0.100
		TEMP	14.408	6.124	0.009	-2.798	-2.759	0.004	-0.008	0.040
		HYDR	0.358	0.431	0.446	0.022	0.052	0.005	0.001	0.137
	32020	OTHR	0.003	-1.874	0.226	0.001	-0.029	-0.053	0.010	0.028
		TEMP	0.445	4.720	2.524	-0.285	-1.833	-0.377	0.922	0.167
		HYDR	0.038	0.558	0.293	0.087	0.009	0.016	0.066	0.007
	42001	OTHR	0.000	-1.916	0.109	0.026	-0.061	0.059	-0.009	0.049
		TEMP	2.451	3.607	2.534	-0.371	-1.611	-0.058	-0.794	-0.254
		HYDR	0.066	0.583	0.326	0.112	0.010	0.011	0.045	0.003
	42011	OTHR	-0.114	-2.144	-0.031	-0.040	-0.091	-0.005	0.004	-0.064
		TEMP	12.432	4.405	0.143	-2.975	-2.774	0.081	0.081	0.172
		HYDR	0.217	0.756	0.529	0.042	0.042	0.012	0.006	0.127
23 Exterior Wall @ EL22.50 ~24.60m	24211	OTHR	0.324	-1.466	0.070	0.004	-0.052	0.015	0.006	-0.290
		TEMP	4.177	2.901	-0.313	0.092	0.628	0.014	-0.122	1.431
		HYDR	0.203	0.688	0.418	0.044	0.187	0.021	0.003	0.217
	24224	OTHR	-0.016	-1.468	0.150	0.035	0.002	-0.018	-0.037	-0.012
		TEMP	0.340	4.642	-3.562	0.871	-0.344	-0.446	-0.824	-0.417
		HYDR	0.034	0.693	0.342	0.139	0.094	0.035	0.068	0.098
	34210	OTHR	0.601	-0.717	0.071	0.010	0.179	0.001	0.000	0.056
		TEMP	15.323	4.794	-0.317	-2.778	-2.409	0.015	-0.011	0.104
		HYDR	0.297	0.145	0.251	0.021	0.109	0.013	0.002	0.057
	34220	OTHR	0.081	-1.341	0.032	0.065	0.029	-0.010	0.043	-0.002
		TEMP	1.721	4.437	2.297	0.980	-1.464	-0.240	1.609	0.013
		HYDR	0.041	0.329	0.143	0.053	0.021	0.025	0.034	0.010
	44201	OTHR	0.037	-1.392	-0.034	0.071	0.029	0.005	-0.044	-0.009
		TEMP	1.001	5.209	0.300	0.668	-1.698	0.337	-1.911	0.044
		HYDR	0.037	0.398	0.239	0.049	0.008	0.005	0.035	0.006
24 Basemat @ Wall Below RCCV	90140	OTHR	-3.168	-2.596	0.278	-0.739	-0.164	1.099	-1.859	1.601
		TEMP	1.052	1.448	1.374	0.756	-0.217	-0.971	-0.682	-0.069
		HYDR	0.719	0.518	0.569	1.410	0.998	0.310	1.000	1.030
	90182	OTHR	-2.239	-2.512	-0.058	0.075	-0.489	0.035	0.037	0.409
		TEMP	1.619	0.481	0.610	-0.246	-3.861	0.184	-0.141	2.769
		HYDR	1.338	0.255	0.263	0.800	0.527	0.217	0.279	1.123
	90111	OTHR	-3.892	-2.310	-0.036	-1.081	0.058	-0.141	0.089	0.109
		TEMP	0.567	2.209	-0.001	-4.129	-0.522	0.050	2.860	0.127
		HYDR	0.202	1.158	0.073	0.385	0.640	0.171	1.039	0.271

Table 3G.1-46

Combined Forces and Moments: RB, Selected Load Combination RB-8a (Continued)

Location	Element ID		Nx (MN/m)	Ny (MN/m)	Nxy (MN/m)	Mx (MNm/m)	My (MNm/m)	Mxy (MNm/m)	Qx (MN/m)	Qy (MN/m)
25 Slab EL4.65m @ RCCV	93140	OTHR	-0.327	0.108	0.280	0.113	0.122	-0.102	0.131	-0.111
		TEMP	-0.669	2.312	4.286	-0.515	-0.395	0.287	-0.135	0.111
		HYDR	0.264	0.274	0.326	0.053	0.039	0.052	0.015	0.018
	93182	OTHR	0.221	-0.129	0.016	0.007	0.086	0.007	-0.004	-0.041
		TEMP	4.229	-4.036	-1.098	-0.354	-1.829	-0.083	0.075	1.370
		HYDR	0.401	0.097	0.114	0.036	0.061	0.006	0.007	0.153
	93111	OTHR	-0.167	0.330	-0.029	0.044	-0.003	-0.001	-0.008	-0.006
		TEMP	-3.602	4.956	-0.257	-1.768	-0.316	-0.047	1.178	0.000
		HYDR	0.096	0.435	0.096	0.019	0.029	0.003	0.093	0.003
26 Slab EL17.5m @ RCCV	96144	OTHR	0.039	0.607	0.775	0.148	0.150	-0.116	0.140	-0.122
		TEMP	-0.269	4.712	6.965	-0.230	-0.125	0.167	-0.073	0.023
		HYDR	0.081	0.029	0.338	0.099	0.082	0.050	0.019	0.021
	96186	OTHR	1.005	-0.419	-0.109	0.008	0.091	0.001	-0.004	-0.109
		TEMP	6.688	-4.125	-1.418	-0.091	-0.316	-0.048	0.016	0.347
		HYDR	0.259	0.142	0.173	0.049	0.232	0.009	0.011	0.187
	96113	OTHR	-0.524	1.558	-0.150	0.293	0.072	-0.007	-0.066	0.008
		TEMP	-8.342	2.574	-1.682	-4.481	-2.783	-0.199	1.240	-0.059
		HYDR	0.076	0.484	0.282	0.349	0.083	0.012	0.268	0.029
27 Slab EL27.0m @ RCCV	98472	OTHR	0.517	0.595	-0.132	0.068	0.087	-0.045	0.237	-0.244
		TEMP	-0.778	-0.772	5.392	-0.313	0.031	-0.311	0.451	-0.561
		HYDR	0.140	0.069	0.211	0.086	0.112	0.056	0.069	0.071
	98514	OTHR	0.257	0.518	0.031	-0.012	-0.205	0.002	0.004	-0.135
		TEMP	0.436	-2.393	-1.392	-0.533	-0.070	-0.005	0.036	-0.726
		HYDR	0.250	0.113	0.251	0.039	0.185	0.005	0.003	0.158
	98424	OTHR	-0.262	1.552	-0.068	0.065	0.169	-0.132	-0.587	-0.047
		TEMP	-9.063	-6.855	-1.452	1.316	-0.418	0.194	-5.559	-0.101
		HYDR	0.068	0.218	0.135	0.326	0.135	0.021	0.220	0.014
28 Pool Girder @ Storage Pool	123054	OTHR	0.268	0.703	1.298	0.073	0.021	-0.126	-0.045	-0.065
		TEMP	1.314	-2.832	1.430	2.281	2.120	0.027	-0.232	0.482
		HYDR	0.169	0.213	0.180	0.014	0.011	0.008	0.016	0.018
	123154	OTHR	0.276	-0.021	1.151	0.087	0.039	-0.138	-0.070	0.025
		TEMP	1.031	0.747	-0.407	1.925	1.145	-0.338	-0.086	0.247
		HYDR	0.305	0.042	0.174	0.020	0.013	0.023	0.009	0.001
29 Pool Girder @ Cavity	123062	OTHR	0.376	-1.081	-1.271	-0.027	0.143	0.004	0.072	0.130
		TEMP	-1.254	-0.148	-0.719	0.101	0.323	0.027	0.057	0.172
		HYDR	0.185	0.022	0.140	0.013	0.016	0.006	0.007	0.004
	123162	OTHR	1.993	-0.346	-0.961	0.017	-0.013	-0.003	-0.004	-0.034
		TEMP	-1.691	-0.032	-0.470	0.128	-0.117	-0.003	-0.151	0.085
		HYDR	0.453	0.019	0.133	0.024	0.015	0.004	0.016	0.004
30 Pool Girder @ Fuel Pool	123067	OTHR	0.264	0.977	-1.244	-0.043	-0.084	0.012	-0.059	-0.050
		TEMP	-2.405	-6.001	-1.842	0.639	0.439	-0.117	-0.150	0.470
		HYDR	0.176	1.073	0.411	0.030	0.029	0.012	0.024	0.030
	123167	OTHR	-0.163	0.197	-1.252	-0.003	-0.053	0.030	-0.088	-0.002
		TEMP	-2.204	-2.669	-2.246	0.268	-0.449	-0.228	-0.011	0.180
		HYDR	0.478	0.311	0.449	0.019	0.008	0.008	0.012	0.005
31 MS Tunnel Wall and Slab	150122	OTHR	0.037	-0.290	0.365	0.020	0.098	0.014	-0.006	-0.067
		TEMP	0.224	-0.515	1.901	1.053	3.140	-0.007	-0.584	0.364
		HYDR	0.018	0.056	0.006	0.008	0.033	0.006	0.002	0.021
	96611	OTHR	-0.050	0.725	-0.045	0.053	-0.095	-0.054	-0.069	0.018
		TEMP	-0.447	4.103	-0.332	-1.287	-7.109	-0.423	0.426	0.209
		HYDR	0.009	0.075	0.012	0.044	0.101	0.018	0.015	0.008
	98614	OTHR	-0.010	-0.347	-0.011	-0.199	-1.002	-0.138	0.009	0.053
		TEMP	-0.187	1.989	-0.145	-0.861	-10.477	-0.011	0.470	0.303
		HYDR	0.006	0.115	0.007	0.005	0.056	0.009	0.001	0.010

Table 3G.1-47

Combined Forces and Moments: RB, Selected Load Combination RB-8b

Location	Element ID		Nx (MN/m)	Ny (MN/m)	Nxy (MN/m)	Mx (MNm/m)	My (MNm/m)	Mxy (MNm/m)	Qx (MN/m)	Qy (MN/m)
18 Wall Below RCCV Bottom	6	OTHR	-1.631	-5.735	-0.321	0.092	0.247	-0.007	0.007	0.196
		TEMP	0.745	-0.977	-0.895	0.238	1.920	-0.053	0.044	0.293
		HYDR	0.772	1.667	0.389	0.220	1.254	0.003	0.011	0.440
	13	OTHR	-1.520	-4.338	-0.020	-0.201	-0.940	0.006	-0.005	-0.213
		TEMP	-0.174	-4.065	-0.782	0.604	3.357	-0.002	0.023	0.785
		HYDR	0.611	1.684	0.393	0.167	0.980	0.004	0.008	0.338
	24	OTHR	-1.401	-4.693	-0.140	-0.240	-1.491	-0.002	0.003	-0.524
		TEMP	0.101	-3.765	0.212	0.594	3.314	-0.007	-0.003	0.779
		HYDR	0.664	1.845	0.387	0.123	0.766	0.004	0.007	0.271
19 Wall Below RCCV Mid-Height	806	OTHR	-1.071	-4.540	-0.256	0.015	0.091	-0.017	-0.015	-0.060
		TEMP	1.907	-2.149	0.225	0.307	1.688	0.090	-0.068	-0.082
		HYDR	0.214	1.640	0.518	0.017	0.091	0.024	0.003	0.027
	813	OTHR	-1.453	-4.313	0.130	-0.007	0.170	-0.004	0.007	-0.004
		TEMP	1.360	-3.986	-0.566	0.221	1.702	-0.034	0.006	0.602
		HYDR	0.164	1.703	0.531	0.023	0.089	0.010	0.003	0.080
	824	OTHR	-1.751	-4.549	-0.033	0.117	0.442	0.010	-0.002	0.128
		TEMP	1.151	-3.732	0.198	0.224	1.729	0.027	0.015	0.502
		HYDR	0.175	1.868	0.508	0.012	0.095	0.013	0.001	0.050
20 Wall Below RCCV Top	1606	OTHR	0.209	-3.939	-0.136	-0.299	-1.735	0.024	0.006	0.436
		TEMP	15.858	-3.114	0.381	-0.839	-4.009	0.124	0.101	3.042
		HYDR	0.627	1.658	0.505	0.343	1.917	0.009	0.006	0.564
	1613	OTHR	0.015	-4.292	0.232	-0.329	-1.754	-0.004	-0.003	0.474
		TEMP	15.713	-4.649	-0.420	-1.005	-5.538	-0.011	-0.016	3.612
		HYDR	0.620	1.694	0.502	0.340	1.957	0.004	0.008	0.601
	1624	OTHR	0.444	-4.077	0.005	-0.366	-2.207	0.007	-0.006	0.660
		TEMP	16.688	-4.842	-0.107	-1.115	-5.549	0.001	-0.106	3.698
		HYDR	0.683	1.834	0.505	0.336	1.898	0.003	0.010	0.592
21 Exterior Wall @ EL-11.50 ~-10.50m	20011	OTHR	-1.766	-3.208	-0.705	0.204	1.035	0.020	0.031	0.333
		TEMP	3.314	4.817	0.922	0.447	1.837	0.052	-0.225	0.576
		HYDR	0.135	0.207	0.589	0.279	1.135	0.010	0.029	0.418
	20023	OTHR	-1.158	-1.481	-0.603	-0.026	-0.230	0.012	-0.055	-0.133
		TEMP	-1.453	-1.169	1.549	1.890	4.020	0.180	0.322	0.683
		HYDR	0.016	0.467	0.114	0.074	0.109	0.011	0.091	0.068
	30010	OTHR	-1.132	-2.283	-0.179	-0.146	-0.849	0.007	0.001	0.801
		TEMP	0.688	3.733	-0.258	1.289	4.763	-0.022	-0.031	-0.865
		HYDR	0.416	0.191	0.261	0.135	0.710	0.003	0.006	0.180
	30020	OTHR	-0.944	-1.700	-0.244	-0.566	-0.765	0.026	-0.147	0.327
		TEMP	-0.058	-1.477	-0.392	0.021	1.209	0.144	-0.026	-0.282
		HYDR	0.034	0.601	0.161	0.028	0.126	0.006	0.045	0.038
	40001	OTHR	-0.747	-1.860	0.398	-0.351	-1.058	-0.203	0.069	0.622
		TEMP	-0.090	-1.141	0.056	0.039	1.330	-0.097	0.105	-0.322
		HYDR	0.034	0.620	0.140	0.046	0.114	0.006	0.047	0.031
	40011	OTHR	-1.362	-2.969	-0.028	-0.185	-1.183	0.002	0.005	1.471
		TEMP	1.295	3.630	0.051	1.243	4.654	0.011	0.015	-0.844
		HYDR	0.324	0.343	0.301	0.092	0.471	0.005	0.008	0.113

Table 3G.1-47

Combined Forces and Moments: RB, Selected Load Combination RB-8b (Continued)

Location	Element ID		Nx (MN/m)	Ny (MN/m)	Nxy (MN/m)	Mx (MNm/m)	My (MNm/m)	Mxy (MNm/m)	Qx (MN/m)	Qy (MN/m)
22 Exterior Wall @ EL-4.65 ~-6.60m	22011	OTHR	0.340	-2.632	0.601	-0.004	0.124	0.014	-0.027	0.173
		TEMP	5.080	4.474	-0.209	-0.175	-0.228	0.067	0.045	0.074
		HYDR	0.227	0.763	0.623	0.012	0.082	0.020	0.003	0.156
	22023	OTHR	-0.043	-1.598	-0.021	0.116	0.050	-0.081	0.032	0.007
		TEMP	2.211	-3.114	-2.141	0.528	0.492	-0.052	0.386	0.393
		HYDR	0.050	0.414	0.306	0.106	0.032	0.026	0.029	0.011
	32010	OTHR	0.335	-1.829	0.025	-0.020	0.035	0.009	0.000	-0.128
		TEMP	16.739	7.724	-0.075	-2.893	-3.003	-0.001	-0.014	0.022
		HYDR	0.268	0.301	0.334	0.019	0.042	0.004	0.001	0.100
	32020	OTHR	0.015	-1.847	0.282	0.025	-0.021	-0.065	0.026	0.031
		TEMP	0.653	4.869	2.518	0.104	-1.860	-0.395	1.226	0.199
		HYDR	0.030	0.375	0.221	0.070	0.007	0.013	0.052	0.005
	42001	OTHR	0.014	-1.879	0.136	0.057	-0.054	0.063	-0.020	0.051
		TEMP	2.720	3.801	2.644	0.130	-1.563	-0.051	-0.998	-0.239
		HYDR	0.050	0.394	0.243	0.090	0.007	0.009	0.036	0.002
	42011	OTHR	-0.005	-2.050	-0.021	-0.044	-0.083	-0.007	0.004	-0.089
		TEMP	14.110	5.515	0.234	-3.164	-3.046	0.073	0.090	0.169
		HYDR	0.174	0.524	0.390	0.035	0.041	0.009	0.005	0.100
23 Exterior Wall @ EL22.50 ~24.60m	24211	OTHR	0.447	-1.379	0.064	0.021	0.047	0.017	0.008	-0.340
		TEMP	6.073	5.669	-0.239	0.176	0.982	0.008	-0.147	1.336
		HYDR	0.139	0.484	0.307	0.030	0.133	0.015	0.003	0.151
	24224	OTHR	-0.012	-1.537	0.106	0.031	0.010	-0.012	-0.028	-0.010
		TEMP	1.011	5.349	-3.664	1.966	0.071	-0.637	-1.563	-0.323
		HYDR	0.024	0.484	0.237	0.097	0.065	0.024	0.049	0.069
	34210	OTHR	0.731	-0.690	0.073	0.008	0.207	0.000	0.000	0.065
		TEMP	21.813	5.545	-0.581	-2.903	-2.819	0.035	-0.002	-0.128
		HYDR	0.213	0.101	0.181	0.014	0.075	0.009	0.001	0.040
	34220	OTHR	0.086	-1.422	0.070	0.066	0.041	-0.008	0.043	-0.004
		TEMP	2.794	5.432	4.414	2.629	-1.178	-0.711	2.571	0.094
		HYDR	0.028	0.230	0.103	0.036	0.015	0.017	0.022	0.007
	44201	OTHR	0.038	-1.448	0.031	0.076	0.038	0.002	-0.042	-0.011
		TEMP	1.793	6.586	0.562	2.230	-1.491	0.539	-2.967	0.044
		HYDR	0.026	0.278	0.167	0.034	0.005	0.003	0.024	0.004
24 Basemat @ Wall Below RCCV	90140	OTHR	-3.176	-2.551	0.358	-0.497	0.031	0.785	-1.841	1.550
		TEMP	0.838	1.691	1.751	-0.171	-1.046	-1.095	-1.135	0.139
		HYDR	0.511	0.380	0.435	1.016	0.711	0.265	0.709	0.729
	90182	OTHR	-2.073	-2.496	-0.063	-0.026	-0.141	0.077	0.030	0.391
		TEMP	1.908	0.687	0.488	-0.873	-5.527	0.260	-0.110	3.825
		HYDR	0.956	0.181	0.195	0.570	0.440	0.179	0.209	0.795
	90111	OTHR	-3.872	-2.223	-0.046	-0.736	-0.032	-0.093	0.071	0.105
		TEMP	0.733	2.908	-0.011	-5.322	-1.147	0.107	3.687	0.151
		HYDR	0.135	0.851	0.058	0.342	0.458	0.143	0.736	0.209

Table 3G.1-47

Combined Forces and Moments: RB, Selected Load Combination RB-8b (Continued)

Location	Element ID		Nx (MN/m)	Ny (MN/m)	Nxy (MN/m)	Mx (MNm/m)	My (MNm/m)	Mxy (MNm/m)	Qx (MN/m)	Qy (MN/m)
25 Slab EL4.65m @ RCCV	93140	OTHR	-0.300	0.152	0.319	0.125	0.131	-0.112	0.132	-0.113
		TEMP	-0.383	3.018	5.804	-0.739	-0.564	0.413	-0.192	0.163
		HYDR	0.199	0.202	0.263	0.038	0.028	0.035	0.011	0.013
	93182	OTHR	0.300	-0.111	0.012	0.005	0.101	0.008	-0.003	-0.033
		TEMP	6.161	-5.154	-1.518	-0.481	-2.508	-0.114	0.105	1.903
		HYDR	0.304	0.089	0.090	0.026	0.045	0.004	0.005	0.109
	93111	OTHR	-0.149	0.400	-0.042	0.061	-0.004	-0.001	-0.005	-0.006
		TEMP	-4.494	6.820	-0.448	-2.369	-0.414	-0.066	1.594	0.001
		HYDR	0.094	0.336	0.073	0.014	0.021	0.002	0.067	0.002
26 Slab EL17.5m @ RCCV	96144	OTHR	0.063	0.731	0.907	0.168	0.163	-0.128	0.144	-0.126
		TEMP	0.733	5.839	8.138	-0.232	-0.178	0.174	-0.043	0.066
		HYDR	0.059	0.024	0.247	0.068	0.056	0.034	0.013	0.015
	96186	OTHR	1.180	-0.491	-0.143	0.013	0.118	0.004	-0.005	-0.132
		TEMP	9.999	-4.559	-2.165	-0.150	-0.675	-0.057	0.023	0.638
		HYDR	0.185	0.103	0.126	0.034	0.159	0.006	0.008	0.128
	96113	OTHR	-0.634	1.795	-0.198	0.378	0.087	0.004	-0.133	0.003
		TEMP	-9.165	5.149	-1.811	-4.378	-2.755	-0.237	1.010	-0.100
		HYDR	0.059	0.334	0.201	0.240	0.058	0.009	0.185	0.020
27 Slab EL27.0m @ RCCV	98472	OTHR	0.511	0.666	-0.153	0.053	0.063	-0.014	0.227	-0.231
		TEMP	-3.645	-3.148	5.906	-1.729	-1.315	-0.297	0.534	-0.685
		HYDR	0.100	0.049	0.144	0.060	0.079	0.039	0.048	0.050
	98514	OTHR	0.281	0.527	0.025	-0.018	-0.251	-0.003	0.006	-0.130
		TEMP	-2.863	-2.858	-1.566	-1.927	-1.719	-0.030	0.065	-0.720
		HYDR	0.173	0.078	0.181	0.027	0.130	0.004	0.002	0.111
	98424	OTHR	-0.297	1.779	-0.078	-0.288	0.115	-0.160	-0.475	-0.038
		TEMP	-8.825	-1.775	-2.345	3.485	0.429	0.374	-5.774	-0.156
		HYDR	0.045	0.153	0.099	0.229	0.096	0.015	0.157	0.010
28 Pool Girder @ Storage Pool	123054	OTHR	0.233	1.340	1.738	0.076	0.018	-0.163	-0.050	-0.076
		TEMP	3.583	1.298	2.382	3.613	2.453	-0.343	0.113	0.317
		HYDR	0.115	0.149	0.128	0.009	0.008	0.005	0.012	0.012
	123154	OTHR	0.038	0.067	1.534	0.086	0.043	-0.188	-0.087	0.029
		TEMP	3.638	3.575	-2.911	3.372	1.303	-0.374	-0.255	0.413
		HYDR	0.211	0.029	0.122	0.014	0.009	0.016	0.006	0.001
29 Pool Girder @ Cavity	123062	OTHR	0.337	-1.462	-1.600	-0.030	0.208	0.000	0.087	0.167
		TEMP	0.505	0.115	-1.385	3.836	3.893	0.008	0.034	0.188
		HYDR	0.127	0.014	0.099	0.009	0.011	0.004	0.005	0.003
	123162	OTHR	2.668	-0.482	-1.193	0.035	0.005	-0.011	-0.024	-0.046
		TEMP	1.929	0.409	-1.840	3.803	2.820	0.092	-0.288	0.644
		HYDR	0.315	0.013	0.093	0.017	0.011	0.003	0.011	0.003
30 Pool Girder @ Fuel Pool	123067	OTHR	0.195	1.617	-1.798	-0.052	-0.089	0.035	-0.037	-0.061
		TEMP	-2.101	-7.271	-3.005	3.592	3.540	-0.636	0.317	0.815
		HYDR	0.121	0.753	0.285	0.022	0.021	0.008	0.017	0.021
	123167	OTHR	-0.323	0.328	-1.761	-0.006	-0.058	0.031	-0.083	0.002
		TEMP	-0.679	-2.776	-3.132	2.749	1.834	-0.242	-0.176	0.616
		HYDR	0.336	0.218	0.312	0.013	0.006	0.006	0.008	0.003
31 MS Tunnel Wall and Slab	150122	OTHR	0.049	-0.354	0.381	0.019	0.106	0.014	-0.005	-0.072
		TEMP	0.316	-0.711	1.797	0.940	3.101	0.011	-0.551	0.426
		HYDR	0.012	0.039	0.004	0.006	0.024	0.004	0.002	0.014
	96611	OTHR	-0.060	0.825	-0.053	0.048	-0.107	-0.055	-0.067	0.019
		TEMP	-0.557	4.662	-0.414	-1.254	-7.116	-0.406	0.420	0.206
		HYDR	0.007	0.052	0.008	0.031	0.072	0.013	0.011	0.005
	98614	OTHR	-0.008	-0.383	-0.010	-0.242	-1.096	-0.153	0.022	0.057
		TEMP	-0.043	0.725	-0.043	-0.850	-9.922	-0.018	0.459	0.307
		HYDR	0.004	0.081	0.005	0.004	0.040	0.006	0.001	0.007

Table 3G.1-48

Combined Forces and Moments: RB, Selected Load Combination RB-9a

Location	Element ID		Nx (MN/m)	Ny (MN/m)	Nxy (MN/m)	Mx (MNm/m)	My (MNm/m)	Mxy (MNm/m)	Qx (MN/m)	Qy (MN/m)
18 Wall Below RCCV Bottom	6	OTHR	-1.406	-6.404	-0.192	-0.045	-0.553	-0.005	0.000	-0.066
		TEMP	1.177	-0.473	-0.669	0.101	1.063	-0.040	0.024	0.044
		SEIS	6.696	12.988	5.722	1.271	7.124	0.093	0.215	2.708
		HYDR	0.730	1.683	0.349	0.209	1.193	0.003	0.010	0.417
	13	OTHR	-1.338	-4.900	0.016	-0.351	-1.786	0.006	-0.005	-0.474
		TEMP	0.307	-3.027	-0.689	0.408	2.284	-0.002	0.019	0.475
		SEIS	5.186	11.839	4.076	0.918	5.398	0.059	0.107	2.066
		HYDR	0.582	1.701	0.362	0.158	0.930	0.004	0.008	0.321
	24	OTHR	-1.135	-5.340	-0.164	-0.396	-2.378	-0.001	0.002	-0.800
		TEMP	0.412	-3.041	0.146	0.425	2.350	-0.005	-0.002	0.516
		SEIS	3.487	9.762	6.470	0.650	3.735	0.101	0.148	1.099
		HYDR	0.638	1.871	0.334	0.114	0.717	0.003	0.007	0.254
19 Wall Below RCCV Mid-Height	806	OTHR	-1.130	-5.219	-0.166	0.007	0.032	-0.022	-0.013	-0.077
		TEMP	1.601	-1.332	0.182	0.235	1.292	0.083	-0.053	-0.063
		SEIS	3.208	10.327	6.462	0.129	0.397	0.170	0.078	0.256
		HYDR	0.209	1.673	0.467	0.016	0.090	0.022	0.003	0.026
	813	OTHR	-1.536	-4.820	0.155	-0.021	0.106	-0.007	0.001	-0.048
		TEMP	1.036	-2.990	-0.508	0.175	1.290	-0.027	0.006	0.450
		SEIS	3.060	10.805	4.961	0.145	0.684	0.059	0.026	0.379
		HYDR	0.162	1.735	0.485	0.023	0.089	0.007	0.002	0.076
	824	OTHR	-1.799	-5.229	-0.062	0.101	0.391	0.009	-0.001	0.085
		TEMP	0.890	-3.046	0.126	0.176	1.306	0.019	0.010	0.396
		SEIS	2.262	9.222	7.635	0.223	0.611	0.100	0.051	0.267
		HYDR	0.180	1.909	0.438	0.013	0.095	0.010	0.001	0.048
20 Wall Below RCCV Top	1606	OTHR	-0.316	-4.589	-0.035	-0.132	-0.772	0.024	0.005	0.141
		TEMP	11.606	-2.042	0.301	-0.668	-3.250	0.099	0.085	2.306
		SEIS	2.070	7.762	7.056	0.382	1.853	0.126	0.026	0.406
		HYDR	0.573	1.710	0.449	0.335	1.886	0.009	0.005	0.547
	1613	OTHR	-0.499	-4.706	0.251	-0.158	-0.779	-0.002	-0.003	0.157
		TEMP	11.229	-3.474	-0.425	-0.785	-4.386	-0.008	-0.014	2.714
		SEIS	1.432	8.968	5.015	0.385	2.293	0.041	0.017	0.757
		HYDR	0.570	1.738	0.465	0.336	1.944	0.004	0.006	0.592
	1624	OTHR	-0.128	-4.778	-0.015	-0.190	-1.182	0.006	-0.007	0.328
		TEMP	12.187	-3.970	-0.124	-0.867	-4.480	-0.001	-0.082	2.817
		SEIS	1.370	7.973	7.604	0.184	1.264	0.056	0.047	0.548
		HYDR	0.624	1.887	0.447	0.331	1.880	0.003	0.008	0.581

OTHR: Loads other than thermal, seismic and hydrodynamic loads
TEMP: Thermal loads
SEIS: Seismic loads
HYDR: Hydrodynamic loads

Table 3G.1-48

Combined Forces and Moments: RB, Selected Load Combination RB-9a (Continued)

Location	Element ID		Nx (MN/m)	Ny (MN/m)	Nxy (MN/m)	Mx (MNm/m)	My (MNm/m)	Mxy (MNm/m)	Qx (MN/m)	Qy (MN/m)
21 Exterior Wall @ EL-11.50 ~-10.50m	20011	OTHR	-1.813	-3.454	-0.718	0.142	0.806	0.015	0.039	0.262
		TEMP	3.023	3.384	0.790	0.274	1.136	0.041	-0.173	0.330
		SEIS	2.167	3.650	9.866	2.028	8.326	0.065	0.140	3.143
		HYDR	0.134	0.191	0.521	0.270	1.101	0.010	0.028	0.406
	20023	OTHR	-1.161	-1.464	-0.578	-0.009	-0.246	0.012	-0.058	-0.141
		TEMP	-1.459	-1.215	1.590	1.936	3.930	0.184	0.310	0.647
		SEIS	0.864	5.664	1.335	0.917	1.307	0.189	1.237	0.863
		HYDR	0.014	0.456	0.106	0.070	0.102	0.010	0.083	0.063
	30010	OTHR	-1.233	-2.332	-0.171	-0.229	-1.260	0.010	0.001	0.889
		TEMP	0.421	2.641	-0.135	1.081	3.585	-0.018	-0.024	-0.601
		SEIS	4.300	5.359	3.754	0.691	3.619	0.060	0.088	1.243
		HYDR	0.411	0.177	0.226	0.129	0.686	0.002	0.005	0.174
	30020	OTHR	-0.971	-1.605	-0.228	-0.535	-0.779	0.017	-0.154	0.328
		TEMP	-0.090	-1.196	-0.238	0.081	1.104	0.123	-0.022	-0.270
		SEIS	0.758	4.090	1.578	0.461	1.470	0.176	0.453	0.467
		HYDR	0.030	0.605	0.155	0.026	0.126	0.006	0.044	0.039
	40001	OTHR	-0.761	-1.778	0.348	-0.322	-1.092	-0.197	0.070	0.628
		TEMP	-0.154	-0.831	0.014	0.123	1.237	-0.081	0.114	-0.310
		SEIS	0.614	4.241	1.322	0.703	1.722	0.243	0.522	0.481
		HYDR	0.030	0.624	0.134	0.044	0.114	0.006	0.045	0.032
	40011	OTHR	-1.359	-3.062	-0.028	-0.275	-1.633	-0.001	0.005	1.569
		TEMP	0.865	2.785	0.044	1.075	3.674	0.007	0.012	-0.638
		SEIS	3.659	4.532	4.410	0.427	2.566	0.087	0.122	0.940
		HYDR	0.301	0.346	0.268	0.087	0.448	0.005	0.007	0.108
22 Exterior Wall @ EL-4.65 ~-6.60m	22011	OTHR	0.107	-2.840	0.646	-0.005	0.093	0.012	-0.024	0.132
		TEMP	3.577	2.789	-0.075	-0.128	-0.161	0.049	0.032	-0.031
		SEIS	1.395	8.082	7.242	0.140	0.949	0.161	0.051	0.897
		HYDR	0.217	0.746	0.584	0.012	0.084	0.019	0.003	0.159
	22023	OTHR	-0.068	-1.626	-0.045	0.050	0.031	-0.067	0.052	0.011
		TEMP	1.984	-3.558	-1.991	0.092	0.423	-0.047	0.570	0.405
		SEIS	0.390	7.366	4.135	0.400	0.178	0.169	0.414	0.150
		HYDR	0.049	0.415	0.288	0.097	0.032	0.026	0.029	0.010
	32010	OTHR	0.038	-1.894	0.039	-0.019	-0.007	0.004	0.000	-0.068
		TEMP	14.408	6.124	0.009	-2.798	-2.759	0.004	-0.008	0.040
		SEIS	1.427	4.890	4.400	0.041	0.275	0.024	0.002	0.240
		HYDR	0.256	0.299	0.303	0.016	0.039	0.004	0.001	0.099
	32020	OTHR	-0.012	-1.885	0.151	-0.027	-0.038	-0.040	-0.008	0.023
		TEMP	0.445	4.720	2.524	-0.285	-1.833	-0.377	0.922	0.167
		SEIS	0.263	5.284	3.554	0.361	0.151	0.135	0.240	0.042
		HYDR	0.028	0.390	0.200	0.064	0.007	0.011	0.048	0.005
	42001	OTHR	-0.015	-1.942	0.065	-0.011	-0.070	0.055	0.004	0.047
		TEMP	2.451	3.607	2.534	-0.371	-1.611	-0.058	-0.794	-0.254
		SEIS	0.225	5.235	3.697	0.356	0.123	0.163	0.227	0.046
		HYDR	0.048	0.408	0.224	0.083	0.007	0.008	0.033	0.002
	42011	OTHR	-0.243	-2.285	-0.042	-0.036	-0.102	-0.003	0.004	-0.039
		TEMP	12.432	4.405	0.143	-2.975	-2.774	0.081	0.081	0.172
		SEIS	0.943	3.822	5.968	0.064	0.220	0.032	0.046	0.091
		HYDR	0.159	0.532	0.361	0.031	0.033	0.008	0.004	0.093

Table 3G.1-48

Combined Forces and Moments: RB, Selected Load Combination RB-9a (Continued)

Location	Element ID		Nx (MN/m)	Ny (MN/m)	Nxy (MN/m)	Mx (MNm/m)	My (MNm/m)	Mxy (MNm/m)	Qx (MN/m)	Qy (MN/m)
23 Exterior Wall @ EL22.50 ~24.60m	24211	OTHR	0.142	-1.583	0.082	-0.022	-0.203	0.012	0.003	-0.211
		TEMP	4.177	2.901	-0.313	0.092	0.628	0.014	-0.122	1.431
		SEIS	1.044	5.100	5.785	0.219	0.980	0.061	0.009	0.902
		HYDR	0.142	0.484	0.283	0.030	0.133	0.015	0.002	0.151
	24224	OTHR	-0.022	-1.342	0.214	0.037	-0.015	-0.027	-0.050	-0.020
		TEMP	0.340	4.642	-3.562	0.871	-0.344	-0.446	-0.824	-0.417
		SEIS	0.398	8.959	4.284	0.751	1.033	0.294	0.365	1.129
		HYDR	0.024	0.485	0.236	0.095	0.064	0.024	0.047	0.068
	34210	OTHR	0.396	-0.758	0.068	0.006	0.104	0.001	0.001	0.035
		TEMP	15.323	4.794	-0.317	-2.778	-2.409	0.015	-0.011	0.104
		SEIS	1.282	1.876	3.821	0.074	0.435	0.015	0.012	0.175
		HYDR	0.202	0.102	0.171	0.015	0.077	0.009	0.001	0.041
	34220	OTHR	0.071	-1.204	-0.033	0.060	0.010	-0.010	0.042	-0.001
		TEMP	1.721	4.437	2.297	0.980	-1.464	-0.240	1.609	0.013
		SEIS	0.161	2.508	2.967	0.161	0.147	0.023	0.056	0.028
		HYDR	0.028	0.231	0.098	0.036	0.015	0.017	0.023	0.007
	44201	OTHR	0.034	-1.296	-0.131	0.061	0.015	0.008	-0.045	-0.007
		TEMP	1.001	5.209	0.300	0.668	-1.698	0.337	-1.911	0.044
		SEIS	0.181	2.787	3.345	0.110	0.044	0.062	0.111	0.034
		HYDR	0.026	0.280	0.164	0.033	0.005	0.003	0.024	0.004
24 Basemat @ Wall Below RCCV	90140	OTHR	-3.152	-2.663	0.155	-1.123	-0.473	1.586	-1.890	1.682
		TEMP	1.052	1.448	1.374	0.756	-0.217	-0.971	-0.682	-0.069
		SEIS	0.987	5.106	3.764	7.300	3.575	4.121	4.750	6.017
		HYDR	0.511	0.359	0.401	0.987	0.702	0.218	0.702	0.721
	90182	OTHR	-2.490	-2.534	-0.046	0.224	-1.047	-0.030	0.047	0.448
		TEMP	1.619	0.481	0.610	-0.246	-3.861	0.184	-0.141	2.769
		SEIS	6.520	1.022	1.631	1.857	2.393	1.579	1.731	4.154
		HYDR	0.940	0.180	0.184	0.566	0.378	0.154	0.197	0.791
	90111	OTHR	-3.919	-2.439	-0.021	-1.644	0.188	-0.215	0.134	0.117
		TEMP	0.567	2.209	-0.001	-4.129	-0.522	0.050	2.860	0.127
		SEIS	1.210	6.067	0.979	2.069	1.701	1.400	2.440	2.861
		HYDR	0.141	0.811	0.051	0.274	0.454	0.121	0.736	0.189

Table 3G.1-48

Combined Forces and Moments: RB, Selected Load Combination RB-9a (Continued)

Location	Element ID		Nx (MN/m)	Ny (MN/m)	Nxy (MN/m)	Mx (MNm/m)	My (MNm/m)	Mxy (MNm/m)	Qx (MN/m)	Qy (MN/m)
25 Slab EL4.65m @ RCCV	93140	OTHR	-0.355	0.055	0.232	0.096	0.110	-0.088	0.129	-0.109
		TEMP	-0.669	2.312	4.286	-0.515	-0.395	0.287	-0.135	0.111
		SEIS	2.338	0.441	0.249	0.456	0.313	0.222	0.173	0.171
		HYDR	0.182	0.196	0.238	0.036	0.027	0.036	0.010	0.012
	93182	OTHR	0.124	-0.146	0.021	0.009	0.067	0.006	-0.004	-0.052
		TEMP	4.229	-4.036	-1.098	-0.354	-1.829	-0.083	0.075	1.370
		SEIS	0.581	0.171	0.500	0.148	0.714	0.027	0.037	0.681
		HYDR	0.290	0.073	0.082	0.025	0.042	0.004	0.005	0.108
	93111	OTHR	-0.186	0.248	-0.015	0.020	-0.002	-0.001	-0.011	-0.005
		TEMP	-3.602	4.956	-0.257	-1.768	-0.316	-0.047	1.178	0.000
		SEIS	0.171	0.160	0.219	0.268	0.045	0.030	0.247	0.006
		HYDR	0.073	0.316	0.068	0.013	0.021	0.002	0.066	0.002
26 Slab EL17.5m @ RCCV	96144	OTHR	-0.007	0.453	0.581	0.117	0.124	-0.096	0.133	-0.113
		TEMP	-0.269	4.712	6.965	-0.230	-0.125	0.167	-0.073	0.023
		SEIS	0.573	0.343	0.278	0.356	0.288	0.199	0.127	0.109
		HYDR	0.056	0.021	0.228	0.068	0.057	0.034	0.013	0.015
	96186	OTHR	0.763	-0.307	-0.073	0.003	0.050	0.000	-0.003	-0.079
		TEMP	6.688	-4.125	-1.418	-0.091	-0.316	-0.048	0.016	0.347
		SEIS	0.771	0.257	0.280	0.142	0.750	0.027	0.044	0.601
		HYDR	0.176	0.097	0.118	0.035	0.162	0.006	0.008	0.130
	96113	OTHR	-0.370	1.242	-0.107	0.114	0.047	-0.008	0.046	0.016
		TEMP	-8.342	2.574	-1.682	-4.481	-2.783	-0.199	1.240	-0.059
		SEIS	0.238	1.114	0.628	0.581	0.080	0.022	0.522	0.084
		HYDR	0.054	0.335	0.192	0.246	0.059	0.009	0.189	0.020
27 Slab EL27.0m @ RCCV	98472	OTHR	0.484	0.424	-0.073	0.098	0.138	-0.095	0.233	-0.246
		TEMP	-0.778	-0.772	5.392	-0.313	0.031	-0.311	0.451	-0.561
		SEIS	1.074	1.032	0.499	0.268	0.372	0.232	0.252	0.290
		HYDR	0.100	0.049	0.146	0.061	0.079	0.039	0.048	0.051
	98514	OTHR	0.185	0.394	0.040	0.000	-0.117	0.009	0.002	-0.136
		TEMP	0.436	-2.393	-1.392	-0.533	-0.070	-0.005	0.036	-0.726
		SEIS	0.496	0.238	0.444	0.105	0.573	0.025	0.015	0.463
		HYDR	0.171	0.078	0.171	0.028	0.131	0.004	0.002	0.112
	98424	OTHR	-0.206	1.190	-0.051	0.658	0.260	-0.086	-0.781	-0.062
		TEMP	-9.063	-6.855	-1.452	1.316	-0.418	0.194	-5.559	-0.101
		SEIS	1.239	1.405	6.000	2.252	0.701	0.250	1.676	0.132
		HYDR	0.047	0.148	0.092	0.231	0.096	0.014	0.157	0.010

Table 3G.1-48

Combined Forces and Moments: RB, Selected Load Combination RB-9a (Continued)

Location	Element ID		Nx (MN/m)	Ny (MN/m)	Nxy (MN/m)	Mx (MNm/m)	My (MNm/m)	Mxy (MNm/m)	Qx (MN/m)	Qy (MN/m)
28 Pool Girder @ Storage Pool	123054	OTHR	0.320	-0.358	0.590	0.065	0.025	-0.066	-0.034	-0.052
		TEMP	1.314	-2.832	1.430	2.281	2.120	0.027	-0.232	0.482
		SEIS	0.567	2.862	0.901	0.349	0.164	0.091	0.029	0.214
		HYDR	0.118	0.151	0.128	0.010	0.008	0.005	0.012	0.012
	123154	OTHR	0.636	-0.183	0.550	0.085	0.036	-0.059	-0.040	0.019
		TEMP	1.031	0.747	-0.407	1.925	1.145	-0.338	-0.086	0.247
		SEIS	1.903	0.756	0.974	0.239	0.083	0.131	0.056	0.012
		HYDR	0.215	0.029	0.123	0.014	0.009	0.016	0.006	0.001
29 Pool Girder @ Cavity	123062	OTHR	0.409	-0.519	-0.742	-0.026	0.039	0.012	0.048	0.056
		TEMP	-1.254	-0.148	-0.719	0.101	0.323	0.027	0.057	0.172
		SEIS	0.682	1.107	0.498	0.107	0.171	0.057	0.065	0.107
		HYDR	0.126	0.015	0.096	0.008	0.011	0.004	0.005	0.003
	123162	OTHR	0.850	-0.177	-0.579	-0.013	-0.028	0.006	0.027	-0.010
		TEMP	-1.691	-0.032	-0.470	0.128	-0.117	-0.003	-0.151	0.085
		SEIS	1.683	0.934	0.368	0.199	0.073	0.035	0.159	0.044
		HYDR	0.318	0.014	0.091	0.016	0.010	0.003	0.011	0.003
30 Pool Girder @ Fuel Pool	123067	OTHR	0.342	-0.154	-0.357	-0.023	-0.071	-0.017	-0.079	-0.053
		TEMP	-2.405	-6.001	-1.842	0.639	0.439	-0.117	-0.150	0.470
		SEIS	0.865	3.317	1.559	0.199	0.172	0.105	0.128	0.274
		HYDR	0.124	0.755	0.287	0.021	0.020	0.008	0.017	0.021
	123167	OTHR	0.062	-0.073	-0.424	0.011	-0.028	0.025	-0.069	0.002
		TEMP	-2.204	-2.669	-2.246	0.268	-0.449	-0.228	-0.011	0.180
		SEIS	1.426	0.863	1.646	0.073	0.126	0.070	0.060	0.020
		HYDR	0.336	0.219	0.315	0.014	0.006	0.005	0.008	0.003
31 MS Tunnel Wall and Slab	150122	OTHR	0.017	-0.186	0.340	0.022	0.085	0.015	-0.008	-0.058
		TEMP	0.224	-0.515	1.901	1.053	3.140	-0.007	-0.584	0.364
		SEIS	0.028	0.234	0.256	0.054	0.188	0.053	0.015	0.271
		HYDR	0.013	0.039	0.004	0.006	0.024	0.004	0.002	0.014
	96611	OTHR	-0.037	0.580	-0.034	0.060	-0.078	-0.053	-0.072	0.017
		TEMP	-0.447	4.103	-0.332	-1.287	-7.109	-0.423	0.426	0.209
		SEIS	0.059	0.477	0.078	0.112	0.436	0.132	0.083	0.082
		HYDR	0.007	0.053	0.008	0.031	0.072	0.013	0.011	0.006
	98614	OTHR	-0.014	-0.283	-0.014	-0.130	-0.852	-0.114	-0.011	0.046
		TEMP	-0.187	1.989	-0.145	-0.861	-10.477	-0.011	0.470	0.303
		SEIS	0.047	0.309	0.039	0.134	0.654	0.371	0.066	0.049
		HYDR	0.004	0.081	0.005	0.004	0.040	0.006	0.001	0.007

Table 3G.1-49

Combined Forces and Moments: RB, Selected Load Combination RB-9b

	Element ID		Nx (MN/m)	Ny (MN/m)	Nxy (MN/m)	Mx (MNm/m)	My (MNm/m)	Mxy (MNm/m)	Qx (MN/m)	Qy (MN/m)
18 Wall Below RCCV Bottom	6	OTHR	-1.466	-6.231	-0.226	-0.009	-0.342	-0.005	0.002	0.003
		TEMP	0.745	-0.977	-0.895	0.238	1.920	-0.053	0.044	0.293
		SEIS	6.696	12.988	5.722	1.271	7.124	0.093	0.215	2.708
		HYDR	0.564	1.225	0.276	0.162	0.924	0.002	0.008	0.323
	13	OTHR	-1.386	-4.756	0.006	-0.311	-1.562	0.006	-0.005	-0.405
		TEMP	-0.174	-4.065	-0.782	0.604	3.357	-0.002	0.023	0.785
		SEIS	5.186	11.839	4.076	0.918	5.398	0.059	0.107	2.066
		HYDR	0.446	1.240	0.285	0.124	0.725	0.003	0.006	0.250
	24	OTHR	-1.206	-5.176	-0.157	-0.355	-2.143	-0.001	0.003	-0.727
		TEMP	0.101	-3.765	0.212	0.594	3.314	-0.007	-0.003	0.779
		SEIS	3.487	9.762	6.470	0.650	3.735	0.101	0.148	1.099
		HYDR	0.491	1.370	0.273	0.092	0.573	0.003	0.005	0.203
19 Wall Below RCCV Mid-Height	806	OTHR	-1.113	-5.043	-0.189	0.009	0.050	-0.021	-0.013	-0.073
		TEMP	1.907	-2.149	0.225	0.307	1.688	0.090	-0.068	-0.082
		SEIS	3.208	10.327	6.462	0.129	0.397	0.170	0.078	0.256
		HYDR	0.151	1.212	0.367	0.012	0.070	0.018	0.002	0.020
	813	OTHR	-1.512	-4.691	0.148	-0.017	0.125	-0.006	0.002	-0.037
		TEMP	1.360	-3.986	-0.566	0.221	1.702	-0.034	0.006	0.602
		SEIS	3.060	10.805	4.961	0.145	0.684	0.059	0.026	0.379
		HYDR	0.116	1.258	0.385	0.017	0.068	0.007	0.002	0.059
	824	OTHR	-1.785	-5.057	-0.054	0.106	0.407	0.009	-0.001	0.097
		TEMP	1.151	-3.732	0.198	0.224	1.729	0.027	0.015	0.502
		SEIS	2.262	9.222	7.635	0.223	0.611	0.100	0.051	0.267
		HYDR	0.127	1.390	0.359	0.009	0.073	0.009	0.001	0.038
20 Wall Below RCCV Top	1606	OTHR	-0.164	-4.421	-0.060	-0.180	-1.048	0.024	0.005	0.226
		TEMP	15.858	-3.114	0.381	-0.839	-4.009	0.124	0.101	3.042
		SEIS	2.070	7.762	7.056	0.382	1.853	0.126	0.026	0.406
		HYDR	0.485	1.233	0.351	0.259	1.447	0.006	0.005	0.427
	1613	OTHR	-0.350	-4.601	0.245	-0.207	-1.059	-0.003	-0.003	0.249
		TEMP	15.713	-4.649	-0.420	-1.005	-5.538	-0.011	-0.016	3.612
		SEIS	1.432	8.968	5.015	0.385	2.293	0.041	0.017	0.757
		HYDR	0.476	1.260	0.360	0.256	1.476	0.003	0.006	0.454
	1624	OTHR	0.039	-4.603	-0.010	-0.241	-1.476	0.006	-0.007	0.424
		TEMP	16.688	-4.842	-0.107	-1.115	-5.549	0.001	-0.106	3.698
		SEIS	1.370	7.973	7.604	0.184	1.264	0.056	0.047	0.548
		HYDR	0.524	1.371	0.354	0.254	1.436	0.003	0.008	0.449

Table 3G.1-49

Combined Forces and Moments: RB, Selected Load Combination RB-9b (Continued)

	Element ID		Nx (MN/m)	Ny (MN/m)	Nxy (MN/m)	Mx (MNm/m)	My (MNm/m)	Mxy (MNm/m)	Qx (MN/m)	Qy (MN/m)
21 Exterior Wall @ EL-11.50 ~-10.50m	20011	OTHR	-1.800	-3.386	-0.714	0.158	0.867	0.016	0.037	0.281
		TEMP	3.314	4.817	0.922	0.447	1.837	0.052	-0.225	0.576
		SEIS	2.167	3.650	9.866	2.028	8.326	0.065	0.140	3.143
		HYDR	0.099	0.152	0.412	0.204	0.828	0.007	0.021	0.305
	20023	OTHR	-1.160	-1.469	-0.585	-0.014	-0.242	0.012	-0.057	-0.139
		TEMP	-1.453	-1.169	1.549	1.890	4.020	0.180	0.322	0.683
		SEIS	0.864	5.664	1.335	0.917	1.307	0.189	1.237	0.863
		HYDR	0.011	0.336	0.082	0.053	0.078	0.008	0.064	0.048
	30010	OTHR	-1.205	-2.316	-0.173	-0.207	-1.150	0.009	0.001	0.865
		TEMP	0.688	3.733	-0.258	1.289	4.763	-0.022	-0.031	-0.865
		SEIS	4.300	5.359	3.754	0.691	3.619	0.060	0.088	1.243
		HYDR	0.304	0.132	0.184	0.100	0.526	0.002	0.004	0.133
	30020	OTHR	-0.963	-1.631	-0.232	-0.544	-0.775	0.020	-0.152	0.328
		TEMP	-0.058	-1.477	-0.392	0.021	1.209	0.144	-0.026	-0.282
		SEIS	0.758	4.090	1.578	0.461	1.470	0.176	0.453	0.467
		HYDR	0.024	0.444	0.117	0.021	0.092	0.004	0.033	0.028
	40001	OTHR	-0.757	-1.800	0.361	-0.330	-1.083	-0.199	0.070	0.626
		TEMP	-0.090	-1.141	0.056	0.039	1.330	-0.097	0.105	-0.322
		SEIS	0.614	4.241	1.322	0.703	1.722	0.243	0.522	0.481
		HYDR	0.024	0.458	0.102	0.034	0.083	0.005	0.034	0.022
	40011	OTHR	-1.359	-3.034	-0.028	-0.251	-1.512	-0.001	0.005	1.542
		TEMP	1.295	3.630	0.051	1.243	4.654	0.011	0.015	-0.844
		SEIS	3.659	4.532	4.410	0.427	2.566	0.087	0.122	0.940
		HYDR	0.232	0.250	0.214	0.069	0.354	0.003	0.006	0.085
22 Exterior Wall @ EL-4.65 ~-6.60m	22011	OTHR	0.178	-2.784	0.633	-0.005	0.103	0.012	-0.025	0.146
		TEMP	5.080	4.474	-0.209	-0.175	-0.228	0.067	0.045	0.074
		SEIS	1.395	8.082	7.242	0.140	0.949	0.161	0.051	0.897
		HYDR	0.173	0.555	0.436	0.009	0.057	0.014	0.002	0.115
	22023	OTHR	-0.060	-1.615	-0.037	0.071	0.037	-0.071	0.046	0.010
		TEMP	2.211	-3.114	-2.141	0.528	0.492	-0.052	0.386	0.393
		SEIS	0.390	7.366	4.135	0.400	0.178	0.169	0.414	0.150
		HYDR	0.037	0.295	0.213	0.080	0.023	0.019	0.022	0.008
	32010	OTHR	0.127	-1.877	0.035	-0.019	0.005	0.006	0.000	-0.087
		TEMP	16.739	7.724	-0.075	-2.893	-3.003	-0.001	-0.014	0.022
		SEIS	1.427	4.890	4.400	0.041	0.275	0.024	0.002	0.240
		HYDR	0.201	0.217	0.231	0.014	0.033	0.003	0.001	0.076
	32020	OTHR	-0.004	-1.867	0.188	-0.011	-0.033	-0.047	0.002	0.025
		TEMP	0.653	4.869	2.518	0.104	-1.860	-0.395	1.226	0.199
		SEIS	0.263	5.284	3.554	0.361	0.151	0.135	0.240	0.042
		HYDR	0.023	0.275	0.154	0.054	0.005	0.010	0.040	0.004
	42001	OTHR	-0.006	-1.917	0.083	0.010	-0.065	0.058	-0.004	0.048
		TEMP	2.720	3.801	2.644	0.130	-1.563	-0.051	-0.998	-0.239
		SEIS	0.225	5.235	3.697	0.356	0.123	0.163	0.227	0.046
		HYDR	0.039	0.291	0.171	0.069	0.005	0.006	0.028	0.002
	42011	OTHR	-0.170	-2.222	-0.035	-0.039	-0.096	-0.004	0.004	-0.055
		TEMP	14.110	5.515	0.234	-3.164	-3.046	0.073	0.090	0.169
		SEIS	0.943	3.822	5.968	0.064	0.220	0.032	0.046	0.091
		HYDR	0.134	0.389	0.271	0.027	0.032	0.007	0.004	0.077

Table 3G.1-49

Combined Forces and Moments: RB, Selected Load Combination RB-9b (Continued)

	Element ID		Nx (MN/m)	Ny (MN/m)	Nxy (MN/m)	Mx (MNm/m)	My (MNm/m)	Mxy (MNm/m)	Qx (MN/m)	Qy (MN/m)
23 Exterior Wall @ EL22.50 ~24.60m	24211	OTHR	0.224	-1.526	0.077	-0.011	-0.136	0.013	0.004	-0.244
		TEMP	6.073	5.669	-0.239	0.176	0.982	0.008	-0.147	1.336
		SEIS	1.044	5.100	5.785	0.219	0.980	0.061	0.009	0.902
		HYDR	0.102	0.359	0.211	0.022	0.100	0.011	0.002	0.109
	24224	OTHR	-0.019	-1.388	0.185	0.035	-0.010	-0.023	-0.044	-0.018
		TEMP	1.011	5.349	-3.664	1.966	0.071	-0.637	-1.563	-0.323
		SEIS	0.398	8.959	4.284	0.751	1.033	0.294	0.365	1.129
		HYDR	0.017	0.354	0.169	0.068	0.046	0.018	0.034	0.049
	34210	OTHR	0.482	-0.741	0.070	0.005	0.122	0.001	0.001	0.041
		TEMP	21.813	5.545	-0.581	-2.903	-2.819	0.035	-0.002	-0.128
		SEIS	1.282	1.876	3.821	0.074	0.435	0.015	0.012	0.175
		HYDR	0.147	0.074	0.125	0.010	0.055	0.006	0.001	0.030
	34220	OTHR	0.074	-1.259	-0.008	0.061	0.018	-0.009	0.042	-0.002
		TEMP	2.794	5.432	4.414	2.629	-1.178	-0.711	2.571	0.094
		SEIS	0.161	2.508	2.967	0.161	0.147	0.023	0.056	0.028
		HYDR	0.020	0.170	0.072	0.025	0.010	0.012	0.016	0.005
	44201	OTHR	0.035	-1.333	-0.088	0.064	0.020	0.006	-0.044	-0.008
		TEMP	1.793	6.586	0.562	2.230	-1.491	0.539	-2.967	0.044
		SEIS	0.181	2.787	3.345	0.110	0.044	0.062	0.111	0.034
		HYDR	0.018	0.206	0.118	0.023	0.004	0.003	0.017	0.003
24 Basemat @ Wall Below RCCV	90140	OTHR	-3.157	-2.633	0.208	-0.962	-0.343	1.376	-1.878	1.649
		TEMP	0.838	1.691	1.751	-0.171	-1.046	-1.095	-1.135	0.139
		SEIS	0.987	5.106	3.764	7.300	3.575	4.121	4.750	6.017
		HYDR	0.384	0.272	0.318	0.741	0.524	0.189	0.522	0.533
	90182	OTHR	-2.379	-2.523	-0.050	0.157	-0.815	-0.002	0.042	0.436
		TEMP	1.908	0.687	0.488	-0.873	-5.527	0.260	-0.110	3.825
		SEIS	6.520	1.022	1.631	1.857	2.393	1.579	1.731	4.154
		HYDR	0.703	0.135	0.141	0.425	0.324	0.130	0.153	0.588
	90111	OTHR	-3.906	-2.382	-0.027	-1.414	0.129	-0.183	0.121	0.114
		TEMP	0.733	2.908	-0.011	-5.322	-1.147	0.107	3.687	0.151
		SEIS	1.210	6.067	0.979	2.069	1.701	1.400	2.440	2.861
		HYDR	0.099	0.619	0.041	0.248	0.342	0.104	0.550	0.150

Table 3G.1-49

Combined Forces and Moments: RB, Selected Load Combination RB-9b (Continued)

Location	Element ID		Nx (MN/m)	Ny (MN/m)	Nxy (MN/m)	Mx (MNm/m)	My (MNm/m)	Mxy (MNm/m)	Qx (MN/m)	Qy (MN/m)
25 Slab EL4.65m @ RCCV	93140	OTHR	-0.338	0.084	0.258	0.104	0.116	-0.095	0.130	-0.110
		TEMP	-0.383	3.018	5.804	-0.739	-0.564	0.413	-0.192	0.163
		SEIS	2.338	0.441	0.249	0.456	0.313	0.222	0.173	0.171
		HYDR	0.141	0.153	0.201	0.027	0.019	0.026	0.008	0.009
	93182	OTHR	0.177	-0.134	0.018	0.008	0.077	0.007	-0.004	-0.047
		TEMP	6.161	-5.154	-1.518	-0.481	-2.508	-0.114	0.105	1.903
		SEIS	0.581	0.171	0.500	0.148	0.714	0.027	0.037	0.681
		HYDR	0.232	0.069	0.068	0.019	0.031	0.003	0.004	0.080
	93111	OTHR	-0.174	0.295	-0.024	0.031	-0.003	-0.001	-0.009	-0.005
		TEMP	-4.494	6.820	-0.448	-2.369	-0.414	-0.066	1.594	0.001
		SEIS	0.171	0.160	0.219	0.268	0.045	0.030	0.247	0.006
		HYDR	0.073	0.256	0.054	0.010	0.016	0.001	0.051	0.002
26 Slab EL17.5m @ RCCV	96144	OTHR	0.009	0.536	0.669	0.130	0.133	-0.103	0.136	-0.116
		TEMP	0.733	5.839	8.138	-0.232	-0.178	0.174	-0.043	0.066
		SEIS	0.573	0.343	0.278	0.356	0.288	0.199	0.127	0.109
		HYDR	0.042	0.018	0.169	0.049	0.040	0.024	0.009	0.010
	96186	OTHR	0.880	-0.355	-0.096	0.006	0.068	0.002	-0.004	-0.094
		TEMP	9.999	-4.559	-2.165	-0.150	-0.675	-0.057	0.023	0.638
		SEIS	0.771	0.257	0.280	0.142	0.750	0.027	0.044	0.601
		HYDR	0.127	0.072	0.088	0.025	0.116	0.004	0.006	0.093
	96113	OTHR	-0.443	1.400	-0.139	0.171	0.057	0.000	0.001	0.013
		TEMP	-9.165	5.149	-1.811	-4.378	-2.755	-0.237	1.010	-0.100
		SEIS	0.238	1.114	0.628	0.581	0.080	0.022	0.522	0.084
		HYDR	0.043	0.239	0.139	0.179	0.044	0.006	0.138	0.015
27 Slab EL27.0m @ RCCV	98472	OTHR	0.480	0.472	-0.087	0.088	0.122	-0.074	0.226	-0.237
		TEMP	-3.645	-3.148	5.906	-1.729	-1.315	-0.297	0.534	-0.685
		SEIS	1.074	1.032	0.499	0.268	0.372	0.232	0.252	0.290
		HYDR	0.075	0.036	0.103	0.045	0.059	0.029	0.035	0.038
	98514	OTHR	0.201	0.400	0.036	-0.004	-0.148	0.006	0.003	-0.133
		TEMP	-2.863	-2.858	-1.566	-1.927	-1.719	-0.030	0.065	-0.720
		SEIS	0.496	0.238	0.444	0.105	0.573	0.025	0.015	0.463
		HYDR	0.122	0.056	0.125	0.020	0.097	0.003	0.002	0.083
	98424	OTHR	-0.230	1.341	-0.059	0.422	0.224	-0.104	-0.706	-0.056
		TEMP	-8.825	-1.775	-2.345	3.485	0.429	0.374	-5.774	-0.156
		SEIS	1.239	1.405	6.000	2.252	0.701	0.250	1.676	0.132
		HYDR	0.033	0.106	0.068	0.172	0.073	0.010	0.118	0.007

Table 3G.1-49

Combined Forces and Moments: RB, Selected Load Combination RB-9b (Continued)

Location	Element ID		Nx (MN/m)	Ny (MN/m)	Nxy (MN/m)	Mx (MNm/m)	My (MNm/m)	Mxy (MNm/m)	Qx (MN/m)	Qy (MN/m)
28 Pool Girder @ Storage Pool	123054	OTHR	0.297	0.067	0.884	0.067	0.023	-0.091	-0.038	-0.059
		TEMP	3.583	1.298	2.382	3.613	2.453	-0.343	0.113	0.317
		SEIS	0.567	2.862	0.901	0.349	0.164	0.091	0.029	0.214
		HYDR	0.085	0.112	0.096	0.007	0.006	0.004	0.008	0.009
	123154	OTHR	0.478	-0.124	0.805	0.084	0.039	-0.092	-0.052	0.022
		TEMP	3.638	3.575	-2.911	3.372	1.303	-0.374	-0.255	0.413
		SEIS	1.903	0.756	0.974	0.239	0.083	0.131	0.056	0.012
		HYDR	0.157	0.021	0.091	0.010	0.007	0.011	0.004	0.001
29 Pool Girder @ Cavity	123062	OTHR	0.382	-0.774	-0.962	-0.028	0.083	0.010	0.058	0.081
		TEMP	0.505	0.115	-1.385	3.836	3.893	0.008	0.034	0.188
		SEIS	0.682	1.107	0.498	0.107	0.171	0.057	0.065	0.107
		HYDR	0.088	0.010	0.070	0.006	0.008	0.003	0.003	0.002
	123162	OTHR	1.300	-0.268	-0.734	-0.001	-0.016	0.001	0.013	-0.018
		TEMP	1.929	0.409	-1.840	3.803	2.820	0.092	-0.288	0.644
		SEIS	1.683	0.934	0.368	0.199	0.073	0.035	0.159	0.044
		HYDR	0.233	0.010	0.066	0.012	0.008	0.002	0.008	0.002
30 Pool Girder @ Fuel Pool	123067	OTHR	0.296	0.273	-0.727	-0.030	-0.074	-0.002	-0.064	-0.060
		TEMP	-2.101	-7.271	-3.005	3.592	3.540	-0.636	0.317	0.815
		SEIS	0.865	3.317	1.559	0.199	0.172	0.105	0.128	0.274
		HYDR	0.090	0.556	0.209	0.015	0.014	0.006	0.012	0.015
	123167	OTHR	-0.045	0.014	-0.764	0.009	-0.031	0.026	-0.066	0.005
		TEMP	-0.679	-2.776	-3.132	2.749	1.834	-0.242	-0.176	0.616
		SEIS	1.426	0.863	1.646	0.073	0.126	0.070	0.060	0.020
		HYDR	0.249	0.161	0.229	0.010	0.004	0.004	0.006	0.002
31 MS Tunnel Wall and Slab	150122	OTHR	0.025	-0.229	0.350	0.021	0.090	0.015	-0.007	-0.062
		TEMP	0.316	-0.711	1.797	0.940	3.101	0.011	-0.551	0.426
		SEIS	0.028	0.234	0.256	0.054	0.188	0.053	0.015	0.271
		HYDR	0.009	0.029	0.003	0.004	0.018	0.003	0.001	0.010
	96611	OTHR	-0.043	0.647	-0.039	0.057	-0.086	-0.053	-0.070	0.018
		TEMP	-0.557	4.662	-0.414	-1.254	-7.116	-0.406	0.420	0.206
		SEIS	0.059	0.477	0.078	0.112	0.436	0.132	0.083	0.082
		HYDR	0.005	0.039	0.006	0.023	0.054	0.009	0.008	0.004
	98614	OTHR	-0.013	-0.307	-0.014	-0.159	-0.916	-0.124	-0.003	0.049
		TEMP	-0.043	0.725	-0.043	-0.850	-9.922	-0.018	0.459	0.307
		SEIS	0.047	0.309	0.039	0.134	0.654	0.371	0.066	0.049
		HYDR	0.003	0.061	0.003	0.003	0.030	0.004	0.001	0.005

Table 3G.1-50

Sectional Thicknesses and Rebar Ratios of RB Used in the Evaluation

Location	Element ID	Thickness (m)	Primary Reinforcement					Shear Tie	
			Position	Direction 1*1		Direction 2*1			
				Arrangement*2	Ratio (%)	Arrangement*2	Ratio (%)	Arrangement	Ratio (%)
18 Wall Below RCCV Bottom	6 13 24	2.0	Inside	2-#18@300	0.860	3-#18@0.9º	1.297	#9@0.9ºx300	0.721
			Outside	3-#18@300	1.290	3-#18@0.9º +1-#18@0.9º	1.729		
19 Wall Below Below RCCV Mid-Height	806 813 824	2.0	Inside	2-#18@300	0.860	3-#18@0.9º	1.297	#9@1.2ºx600	0.270
			Outside	3-#18@300	1.290	3-#18@0.9º	1.297		
20 Wall Below RCCV Top	1606 1613 1624	2.0	Inside	2-#18@300	0.860	3-#18@0.9º	1.297	#9@1.2ºx300	0.540
			Outside	3-#18@300	1.290	3-#18@0.9º +1-#18@1.8º	1.513		
21 Exterior Wall @ EL-11.50 ~-10.50m	20011	2.0	Inside	4-#11@200 +1-#11@400	1.132	5-#11@200 (+1-#11@200)	1.510	#7@400x200	0.484
			Outside	4-#11@200 +1-#11@400	1.132	5-#11@200 (+2-#11@200)	1.761		
	20023	2.0	Inside	4-#11@200 +1-#11@400	1.132	5-#11@200 (+1-#11@200)	1.510	#7@400x200	0.484
			Outside	4-#11@200 +1-#11@400	1.132	5-#11@200	1.258		
	30010 30020	2.0	Inside	3-#11@200 +1-#11@400	0.881	4-#11@200	1.006	#6@400x400	0.177
			Outside	3-#11@200 +1-#11@400	0.881	4-#11@200	1.006		
	40001 40011	2.0	Inside	3-#11@200	0.755	3-#11@200	0.755	#6@400x400	0.177
			Outside	3-#11@200	0.755	3-#11@200	0.755		
22 Exterior Wall @ EL4.65 ~6.60m	22011	1.5	Inside	3-#11@200 +1-#11@400	1.174	4-#11@200 (+1-#11@200)	1.677	#7@400x200	0.484
			Outside	3-#11@200 +1-#11@400	1.174	4-#11@200 (+1-#11@200)	1.677		
	22023	1.5	Inside	3-#11@200 +1-#11@400	1.174	4-#11@200	1.342	#7@400x200	0.484
			Outside	3-#11@200 +1-#11@400	1.174	4-#11@200	1.342		
	32010	1.5	Inside	3-#11@200	1.006	3-#11@200	1.006	#6@400x400	0.177
			Outside	3-#11@200 (+2-#11@200)	1.677	3-#11@200 (+2-#11@200)	1.677		
	32020	1.5	Inside	3-#11@200	1.006	3-#11@200	1.006	#6@400x400	0.177
			Outside	3-#11@200	1.006	3-#11@200	1.006		
	42001	1.5	Inside	3-#11@200	1.006	3-#11@200	1.006	#7@400x400	0.242
			Outside	4-#11@200	1.342	4-#11@200	1.342		

Note *1: Wall Below RCCV — Direction 1: Hoop — Direction 2: Vertical
Exterior Wall — Direction 1: Horizontal — Direction 2: Vertical
Slab/MS Tunnel Slab — Direction 1: N-S — Direction 2: E-W
Pool Girder — Direction 1: Horizontal — Direction 2: Vertical
MS Tunnel Wall — Direction 1: Horizontal — Direction 2: Vertical
Basemat — Direction 1: Top; Radial; Bottom; N-S — Direction 2: Top; Circumferential; Bottom; E-W

Note *2: Rebar in parenthesis indicates additional bars locally required.

Table 3G.1-50

Sectional Thicknesses and Rebar Ratios of RB Used in the Evaluation (Continued)

Location	Element ID	Thickness (m)	Primary Reinforcement					Shear Tie	
			Position	Direction 1*1		Direction 2*1			
				Arrangement*2	Ratio (%)	Arrangement*2	Ratio (%)	Arrangement	Ratio (%)
22 Exterior Wall @ EL4.65 ~6.60m	42011	1.5	Inside	3-#11@200	1.006	3-#11@200	1.006	#7@400x400	0.242
			Outside	4-#11@200 (+1-#11@200)	1.677	4-#11@200 (+1-#11@200)	1.677		
23 Exterior Wall @ EL22.50 ~24.60m	24211	1.5	Inside	3-#11@200 +1-#11@400	1.174	4-#11@200 (+1-#11@200)	1.677	#7@400x200	0.484
			Outside	3-#11@200 +1-#11@400	1.174	4-#11@200	1.342		
	24224	1.5	Inside	3-#11@200 +1-#11@400	1.174	4-#11@200 (+1-#11@200)	1.677	#7@200x200	0.968
			Outside	3-#11@200 +1-#11@400	1.174	4-#11@200 (+1-#11@200)	1.677		
	34210	1.5	Inside	3-#11@200	1.006	3-#11@200	1.006	#6@400x400	0.177
			Outside	3-#11@200 (+2-#11@200)	1.677	3-#11@200 (+2-#11@200)	1.677		
	34220	1.5	Inside	3-#11@200	1.006	3-#11@200	1.006	#6@200x200	0.710
			Outside	3-#11@200	1.006	3-#11@200	1.006		
	44201	1.5	Inside	3-#11@200	1.006	3-#11@200	1.006	#7@200x200	0.968
			Outside	4-#11@200	1.342	4-#11@200	1.342		
24 Basemat @ Wall Below RCCV	90140 90182 90111	4.0	Top	5-#11@0.9°	0.401	4-#11@200 +1-#11@400	0.566	#11@0.9x400	0.801
			Bottom	5-#11@200	0.629	5-#11@200	0.629		
25 Slab EL4.65m @ RCCV	93140 93182 93111	1.0	Top	2-#11@200	1.006	2-#11@200	1.006	#5@200x200	0.500
			Bottom	PLATE t=16	-	PLATE t=16	-		
26 Slab EL17.5m @ RCCV	96144 96186	1.0	Top	2-#11@200	1.006	2-#11@200	1.006	#5@200x200	0.500
			Bottom	PLATE t=16	-	PLATE t=16	-		
	96113	1.6	Top	2-#11@200	0.629	2-#11@200	0.629	#5@200x200	0.500
			Bottom	3-#11@200	0.944	3-#11@200	0.944		

Note *1: Wall Below RCCV — Direction 1: Hoop — Direction 2: Vertical
Exterior Wall — Direction 1: Horizontal — Direction 2: Vertical
Slab/MS Tunnel Slab — Direction 1: N-S — Direction 2: E-W
Pool Girder — Direction 1: Horizontal — Direction 2: Vertical
MS Tunnel Wall — Direction 1: Horizontal — Direction 2: Vertical
Basemat — Direction 1: Top; Radial; Bottom; N-S, — Direction 2: Top; Circumferential; Bottom; E-W

Note *2: Rebar in parenthesis indicates additional bars locally required.

Table 3G.1-50

Sectional Thicknesses and Rebar Ratios of RB Used in the Evaluation (Continued)

Location	Element ID	Thickness (m)	Primary Reinforcement					Shear Tie	
			Position	Direction 1*1		Direction 2*1			
				Arrangement*2	Ratio (%)	Arrangement*2	Ratio (%)	Arrangement	Ratio (%)
27 Slab EL27.0m @ RCCV	98472 98514	1.0	Top	3-#11@200	1.510	3-#11@200	1.510	#5@200x200	0.500
			Bottom	PLATE t=25	-	PLATE t=25	-		
	98424	2.4	Top	4-#11@200	0.839	4-#11@200	0.839	#6@200x200	0.71
			Bottom	4-#11@200	0.839	4-#11@200	0.839		
28 Pool Girder @ Storage Pool	123054 123154	1.6	Inside	3-#11@200	0.944	3-#11@200	0.944	#7@400x200	0.484
			Outside	3-#11@200	0.944	3-#11@200	0.944		
29 Pool Girder @ Cavity	123062 123162	1.6	Inside	3-#11@200	0.944	3-#11@200	0.944	#7@400x400	0.242
			Outside	3-#11@200	0.944	3-#11@200	0.944		
30 Pool Girder @ Fuel Pool	123067 123167	1.6	Inside	3-#11@200	0.944	3-#11@200	0.944	#7@400x200	0.484
			Outside	3-#11@200	0.944	3-#11@200	0.944		
	123167	1.6	Inside	3-#11@200	0.944	3-#11@200	0.944	#7@400x200	0.484
			Outside	3-#11@200	0.944	3-#11@200	0.944		
31 MS Tunnel Wall and Slab	150122	1.3	Inside	2-#11@200	0.774	2-#11@200	0.774	#6@400x400	0.177
			Outside	2-#11@200 +1-#11@400	0.968	2-#11@200 +1-#11@400	0.968		
	96611	1.6	Top	2-#11@200	0.629	2-#11@200	0.629	#5@200x200	0.500
			Bottom	3-#11@200	0.944	3-#11@200	0.944		
	98614	2.4	Top	4-#11@200	0.839	4-#11@200	0.839	#5@200x200	0.500
			Bottom	3-#11@200	0.629	3-#11@200	0.629		

Note *1: Wall Below RCCV — Direction 1: Hoop — Direction 2: Vertical
Exterior Wall — Direction 1: Horizontal — Direction 2: Vertical
Slab/MS Tunnel Slab — Direction 1: N-S — Direction 2: E-W
Pool Girder — Direction 1: Horizontal — Direction 2: Vertical
MS Tunnel Wall — Direction 1: Horizontal — Direction 2: Vertical
Basemat — Direction 1: Top; Radial; Bottom; N-S — Direction 2: Top: Circumferential; Bottom; E-W

Note *2: Rebar in parenthesis indicates additional bars locally required.

Table 3G.1-51

Rebar and Concrete Stresses of RB: Selected Load Combination RB-4

Location	Element ID	Concrete Stress (MPa)		Primary Reinforcement Stress (MPa)				
		Calculated	Allowable	Calculated				Allowable
				Direction 1*		Direction 2*		
				In/Top	Out/Bottom	In/Top	Out/Bottom	
18 Wall	6	-3.5	-29.3	2.6	3.4	-23.8	-21.1	372.2
Below RCCV	13	-4.0	-29.3	0.4	0.9	-26.7	-24.5	372.2
Bottom	24	-5.1	-29.3	3.2	3.1	-32.8	-22.8	372.2
19 Wall Below	806	-4.5	-29.3	2.6	3.3	-17.7	-27.5	372.2
Below RCCV	813	-5.2	-29.3	-0.7	0.7	-20.4	-31.5	372.2
Mid-Height	824	-6.1	-29.3	-1.1	-1.0	-21.1	-35.9	372.2
20 Wall	1606	-5.8	-29.3	16.8	18.4	-33.5	-12.6	372.2
Below RCCV	1613	-8.2	-29.3	13.5	16.9	-45.6	-8.6	372.2
Top	1624	-9.3	-29.3	13.7	22.0	-51.3	-11.1	372.2
21 Exterior Wall	20011	-1.6	-29.3	4.2	0.6	6.0	-7.4	372.2
@ EL-11.50	20023	-5.9	-29.3	14.8	-16.8	23.7	-20.6	372.2
~-10.50m	30010	-1.7	-29.3	0.6	-9.4	1.8	-1.8	372.2
	30020	-2.1	-29.3	-7.5	1.4	-4.7	-12.2	372.2
	40001	-1.8	-29.3	-4.2	-0.9	-6.4	-10.0	372.2
	40011	-1.0	-29.3	0.1	-4.2	1.4	-4.7	372.2
22 Exterior Wall	22011	-1.3	-29.3	37.0	32.6	10.4	3.4	372.2
@ EL4.65	22023	-5.0	-29.3	13.0	13.2	-13.1	-38.2	372.2
~6.60m	32010	-3.3	-29.3	19.4	97.5	-7.6	35.1	372.2
	32020	-3.6	-29.3	5.7	46.1	-5.4	54.3	372.2
	42001	-3.3	-29.3	7.8	32.4	-10.3	27.0	372.2
	42011	-4.1	-29.3	27.3	89.4	-12.8	20.1	372.2
23 Exterior Wall	24211	-1.9	-29.3	5.9	14.7	-6.4	10.0	372.2
@ EL22.50	24224	-2.5	-29.3	31.1	-0.3	9.1	8.9	372.2
~24.60m	34210	-4.7	-29.3	53.2	184.5	7.9	152.8	372.2
	34220	-4.0	-29.3	26.6	4.5	-13.2	51.7	372.2
	44201	-0.6	-29.3	53.4	34.5	6.3	72.2	372.2
24 Basemat	90140	-1.7	-23.5	-11.3	-3.3	1.6	-0.1	372.2
@ Wall	90182	-2.4	-23.5	-12.6	-4.6	-0.9	9.0	372.2
Below RCCV	90111	-3.1	-23.5	-18.5	6.5	3.0	-0.9	372.2
25 Slab	93140	-7.0	-29.3	42.9	37.3	75.5	47.5	372.2 (223.3)
EL4.65m	93182	-13.0	-29.3	16.4	23.9	-61.2	64.8	372.2 (223.3)
@ RCCV	93111	-12.9	-29.3	-60.0	69.1	34.1	34.8	372.2 (223.3)
26 Slab	96144	-4.2	-29.3	84.8	38.6	117.3	46.4	372.2 (223.3)
EL17.5m	96186	-5.2	-29.3	47.0	36.1	-28.7	25.3	372.2 (223.3)
@ RCCV	96113	-11.1	-29.3	-46.8	77.0	-30.2	57.0	372.2
27 Slab	98472	-10.1	-29.3	164.0	41.0	158.3	23.8	372.2 (222.2)
EL27.0m	98514	-5.5	-29.3	-3.2	31.4	-16.7	8.1	372.2 (222.2)
@ RCCV	98424	-6.7	-29.3	-16.0	-36.3	-30.0	-24.6	372.2
28 Pool Girder	123054	-8.8	-29.3	14.1	69.2	-43.6	-2.8	372.2
@ Storage Pool	123154	-3.5	-29.3	28.6	120.8	5.1	68.3	372.2
29 Pool Girder	123062	-1.9	-29.3	-13.3	-11.1	33.1	10.9	372.2
@ Cavity	123162	-2.7	-29.3	-19.4	-19.0	15.4	3.3	372.2
30 Pool Girder	123067	-5.8	-29.3	-13.6	-3.5	-34.9	-28.9	372.2
@ Fuel Pool	123167	-4.2	-29.3	-13.2	-7.5	-6.7	-18.4	372.2
31 MS Tunnel	150122	-13.6	-29.3	13.9	169.6	-22.8	220.5	372.2
Wall and Slab	96611	-8.6	-29.3	1.4	5.1	-21.2	193.7	372.2
	98614	-6.3	-29.3	2.8	2.6	-3.7	151.3	372.2

Note: Negative value means compression.

Note *1: Wall Below RCCV — Direction 1: Hoop, Direction 2: Vertical
Exterior Wall — Direction 1: Horizontal, Direction 2: Vertical
Slab/MS Tunnel Slab — Direction 1: N-S, Direction 2: E-W
Pool Girder — Direction 1: Horizontal, Direction 2: Vertical
MS Tunnel Wall — Direction 1: Horizontal, Direction 2: Vertical
Basemat — Direction 1: Top; Radial, Bottom; N-S, Direction 2: Top; Circumferential, Bottom; E-W

Note *2: Value in parenthesis indicates the allowable stress of the steel plate.

Table 3G.1-52

Rebar and Concrete Stresses of RB: Selected Load Combination RB-8a

Location	Element ID	Concrete Stress (MPa)		Primary Reinforcement Stress (MPa)				
				Calculated				Allowable
		Calculated	Allowable	Direction 1*		Direction 2*		
				In/Top	Out/Bottom	In/Top	Out/Bottom	
18 Wall	6	-6.9	-29.3	7.8	20.4	-15.3	-38.2	372.2
Below RCCV	13	-6.9	-29.3	-1.6	-2.1	-16.1	-39.4	372.2
Bottom	24	-6.1	-29.3	2.5	2.4	-21.9	-37.3	372.2
19 Wall Below	806	-5.6	-29.3	13.8	6.5	-17.8	-33.0	372.2
Below RCCV	813	-6.3	-29.3	2.0	2.7	-21.7	-37.5	372.2
Mid-Height	824	-6.9	-29.3	1.2	1.2	-21.8	-40.5	372.2
20 Wall	1606	-15.9	-29.3	34.2	81.9	-63.2	41.7	372.2
Below RCCV	1613	-17.0	-29.3	31.7	78.5	-72.9	45.1	372.2
Top	1624	-16.6	-29.3	41.3	91.6	-80.9	45.6	372.2
21 Exterior Wall	20011	-5.3	-29.3	32.8	21.0	52.0	-16.6	372.2
@ EL-11.50	20023	-4.9	-28.9	10.3	-13.6	16.0	-19.6	368.9
~-10.50m	30010	-3.2	-29.3	7.5	-7.2	29.5	12.3	372.2
	30020	-2.5	-29.3	-6.0	3.7	-7.7	-14.5	372.2
	40001	-2.3	-29.3	-3.8	1.4	-8.6	-13.4	372.2
	40011	-3.2	-29.3	11.7	-5.0	21.2	-14.2	372.2
22 Exterior Wall	22011	-2.6	-29.3	78.5	65.3	25.0	20.3	372.2
@ EL4.65	22023	-5.0	-29.3	43.7	11.2	-9.6	-25.2	372.2
~6.60m	32010	-0.7	-29.3	99.7	128.5	53.6	88.2	372.2
	32020	-3.4	-29.3	9.5	40.6	-9.3	44.7	372.2
	42001	-2.8	-29.3	10.9	31.0	-12.3	35.0	372.2
	42011	-4.8	-29.3	34.4	92.9	-13.8	48.0	372.2
23 Exterior Wall	24211	-0.8	-29.3	62.4	42.0	44.7	10.5	372.2
@ EL22.50	24224	-1.9	-29.3	27.3	13.8	4.1	21.2	372.2
~24.60m	34210	-0.4	-29.3	84.1	140.0	26.6	88.9	372.2
	34220	-3.0	-29.3	33.9	-6.5	-12.1	29.0	372.2
	44201	-3.2	-29.3	51.8	7.5	-10.2	57.2	372.2
24 Basemat	90140	-1.8	-23.5	-11.7	-5.7	10.2	6.3	372.2
@ Wall	90182	-1.8	-23.5	-9.5	23.1	5.8	5.1	372.2
Below RCCV	90111	-2.4	-23.5	-13.7	3.7	31.8	10.8	372.2
25 Slab	93140	-8.6	-29.3	108.1	60.9	156.5	74.1	372.2 (223.3)
EL4.65m	93182	-13.1	-29.3	68.8	53.5	-65.7	49.4	372.2 (223.3)
@ RCCV	93111	-12.5	-29.3	-61.9	51.0	83.3	61.0	372.2 (223.3)
26 Slab	96144	-9.8	-29.3	253.2	102.7	318.3	99.3	372.2 (223.3)
EL17.5m	96186	-6.7	-29.3	157.9	74.8	-23.3	-22.8	372.2 (223.3)
@ RCCV	96113	-13.6	-28.8	-87.8	28.4	83.9	115.3	368.2
27 Slab	98472	-9.8	-29.1	161.9	32.5	170.8	31.1	370.3 (222.2)
EL27.0m	98514	-3.8	-29.1	35.7	32.4	-6.1	24.0	370.3 (222.2)
@ RCCV	98424	-5.2	-28.1	-18.5	-30.7	-13.6	-8.5	363.0
28 Pool Girder	123054	-6.8	-29.0	35.9	158.0	2.2	119.9	369.8
@ Storage Pool	123154	-3.0	-29.0	40.9	89.8	48.7	60.5	369.8
29 Pool Girder	123062	-2.8	-28.4	36.1	49.4	17.1	51.3	365.0
@ Cavity	123162	-2.1	-28.4	95.4	103.3	60.5	52.6	365.0
30 Pool Girder	123067	-5.2	-28.4	2.4	28.5	-16.7	20.0	365.0
@ Fuel Pool	123167	-5.6	-28.4	32.0	42.2	46.6	28.7	365.0
31 MS Tunnel	150122	-11.4	-29.3	14.7	142.1	-21.5	174.5	372.2
Wall and Slab	96611	-6.7	-29.3	-1.9	6.3	-9.3	189.5	372.2
	98614	-6.4	-29.3	2.2	11.6	-7.0	137.5	372.2

Note: Negative value means compression.

Note *1: Wall Below RCCV — Direction 1: Hoop, Direction 2: Vertical
Exterior Wall — Direction 1: Horizontal, Direction 2: Vertical
Slab/MS Tunnel Slab — Direction 1: N-S, Direction 2: E-W
Pool Girder — Direction 1: Horizontal, Direction 2: Vertical
MS Tunnel Wall — Direction 1: Horizontal, Direction 2: Vertical
Basemat — Direction 1: Top; Radial, Bottom; N-S, Direction 2: Top; Circumferential, Bottom; E-W

Note *2: Value in parenthesis indicates the allowable stress of the steel plate.

Table 3G.1-53

Rebar and Concrete Stresses of RB: Selected Load Combination RB-8b

Location	Element ID	Concrete Stress (MPa)		Primary Reinforcement Stress (MPa)				
		Calculated	Allowable	Calculated				Allowable
				Direction 1*		Direction 2*		
				In/Top	Out/Bottom	In/Top	Out/Bottom	
18 Wall	6	-7.7	-29.3	0.4	2.7	-9.6	-40.7	372.2
Below RCCV	13	-8.2	-29.3	-2.1	-3.1	-11.4	-44.7	372.2
Bottom	24	-7.3	-29.3	1.3	-2.3	-15.4	-41.5	372.2
19 Wall Below	806	-6.0	-29.3	12.4	6.6	-14.3	-34.5	372.2
Below RCCV	813	-6.8	-29.3	2.5	4.6	-19.8	-39.8	372.2
Mid-Height	824	-7.3	-29.3	1.6	2.7	-18.5	-41.5	372.2
20 Wall	1606	-14.2	-29.3	52.6	97.4	-68.0	48.3	372.2
Below RCCV	1613	-16.7	-29.3	46.5	94.5	-81.0	52.0	372.2
Top	1624	-17.9	-29.3	62.3	108.0	-82.1	55.4	372.2
21 Exterior Wall	20011	-4.7	-29.3	37.4	7.9	55.3	-13.0	372.2
@ EL-11.50	20023	-4.7	-28.9	8.5	-13.4	14.4	-18.8	368.9
~-10.50m	30010	-3.0	-29.3	9.6	-5.5	30.2	-8.7	372.2
	30020	-2.6	-29.3	-6.2	5.0	-7.5	-14.9	372.2
	40001	-2.4	-29.3	-4.1	3.1	-8.5	-13.9	372.2
	40011	-2.3	-29.3	7.2	-3.7	12.3	-10.4	372.2
22 Exterior Wall	22011	-1.9	-29.3	105.6	88.2	59.7	59.7	372.2
@ EL4.65	22023	-4.6	-29.3	45.1	9.5	-6.4	-22.2	372.2
~6.60m	32010	-0.5	-29.3	98.6	162.4	13.6	114.7	372.2
	32020	-4.1	-29.3	18.6	18.1	-14.7	42.6	372.2
	42001	-1.8	-29.3	32.6	13.0	-4.0	22.5	372.2
	42011	-4.4	-29.3	36.4	99.8	-11.2	46.8	372.2
23 Exterior Wall	24211	-0.6	-29.3	83.4	53.2	62.5	17.9	372.2
@ EL22.50	24224	-3.0	-29.3	54.8	-5.3	22.1	14.9	372.2
~24.60m	34210	-0.3	-29.3	147.3	238.5	46.4	176.2	372.2
	34220	-2.4	-29.3	76.3	-20.0	-18.3	39.6	372.2
	44201	-2.8	-29.3	82.0	-8.1	19.4	40.0	372.2
24 Basemat	90140	-1.8	-23.5	-11.9	-4.4	1.0	7.5	372.2
@ Wall	90182	-1.9	-23.5	-9.0	6.8	18.5	6.0	372.2
Below RCCV	90111	-2.4	-23.5	-13.8	4.6	18.1	9.8	372.2
25 Slab	93140	-11.1	-29.3	151.5	89.6	194.8	94.9	372.2 (223.3)
EL4.65m	93182	-17.5	-29.3	83.5	67.9	-86.4	72.7	372.2 (223.3)
@ RCCV	93111	-16.4	-29.3	-79.7	73.9	96.9	74.1	372.2 (223.3)
26 Slab	96144	-10.1	-29.3	265.8	106.9	346.1	129.5	372.2 (223.3)
EL17.5m	96186	-8.5	-29.3	199.2	96.1	-30.6	13.4	372.2 (223.3)
@ RCCV	96113	-13.9	-28.8	-88.4	19.7	103.3	128.7	368.2
27 Slab	98472	-11.2	-27.6	-2.6	96.5	14.7	82.5	359.4 (215.6)
EL27.0m	98514	-13.8	-27.6	-20.6	76.0	-19.7	83.9	359.4 (215.6)
@ RCCV	98424	-6.4	-28.1	6.8	-43.6	66.2	33.3	363.0
28 Pool Girder	123054	-7.4	-29.0	33.1	198.9	42.2	213.2	369.8
@ Storage Pool	123154	-4.9	-29.0	49.0	102.9	71.2	67.1	369.8
29 Pool Girder	123062	-13.2	-27.4	35.8	208.1	-2.9	189.5	358.3
@ Cavity	123162	-9.3	-27.4	64.3	262.0	13.5	188.3	358.3
30 Pool Girder	123067	-11.8	-27.4	24.2	160.6	-17.5	146.0	358.3
@ Fuel Pool	123167	-7.2	-27.4	33.7	177.1	21.9	149.9	358.3
31 MS Tunnel	150122	-11.7	-29.3	16.5	133.9	-25.7	166.0	372.2
Wall and Slab	96611	-6.4	-29.3	-2.2	3.2	-6.8	192.5	372.2
	98614	-6.7	-29.3	2.4	5.9	-10.5	125.5	372.2

Note: Negative value means compression.

Note *1:		
Wall Below RCCV	Direction 1: Hoop,	Direction 2: Vertical
Exterior Wall	Direction 1: Horizontal,	Direction 2: Vertical
Slab/MS Tunnel Slab	Direction 1: N-S,	Direction 2: E-W
Pool Girder	Direction 1: Horizontal,	Direction 2: Vertical
MS Tunnel Wall	Direction 1: Horizontal,	Direction 2: Vertical
Basemat	Direction 1: Top; Radial; Bottom; N-S,	Direction 2: Top; Circumferential; Bottom;E-W

Note *2: Value in parenthesis indicates the allowable stress of the steel plate.

Table 3G.1-54

Rebar and Concrete Stresses of RB: Selected Load Combination RB-9a

Location	Element ID	Concrete Stress (MPa)		Primary Reinforcement Stress (MPa)				
		Calculated	Allowable	Calculated				Allowable
				Direction 1*		Direction 2*		
				In/Top	Out/Bottom	In/Top	Out/Bottom	
18 Wall	6	-19.3	-29.3	217.6	230.5	11.2	331.3	372.2
Below RCCV	13	-15.8	-29.3	142.1	158.4	-22.7	235.2	372.2
Bottom	24	-12.8	-29.3	193.3	164.1	216.3	42.3	372.2
19 Wall Below	806	-10.4	-29.3	193.7	95.0	208.1	145.8	372.2
Below RCCV	813	-11.4	-29.3	213.7	132.7	171.2	129.2	372.2
Mid-Height	824	-12.7	-29.3	272.4	163.0	202.5	132.7	372.2
20 Wall	1606	-13.2	-29.3	204.2	177.3	120.2	159.5	372.2
Below RCCV	1613	-23.9	-29.3	139.0	129.0	-104.9	138.3	372.2
Top	1624	-15.3	-29.3	188.2	173.0	-112.3	191.2	372.2
21 Exterior Wall	20011	-20.2	-29.3	252.9	309.2	305.3	355.6	372.2
@ EL-11.50	20023	-8.8	-28.9	26.3	-23.3	72.0	-39.7	368.9
~-10.50m	30010	-10.6	-29.3	185.6	209.3	77.1	331.0	372.2
	30020	-5.8	-29.3	27.9	35.6	10.8	99.0	372.2
	40001	-6.1	-29.3	56.2	15.6	-8.5	148.5	372.2
	40011	-9.4	-29.3	243.2	264.8	160.8	357.7	372.2
22 Exterior Wall	22011	-13.2	-29.3	250.8	199.6	327.7	210.7	372.2
@ EL4.65	22023	-10.1	-29.3	126.1	93.6	132.8	95.1	372.2
~6.60m	32010	-6.2	-29.3	285.5	258.4	306.2	283.4	372.2
	32020	-7.2	-29.3	143.4	123.8	193.3	274.8	372.2
	42001	-7.5	-29.3	148.3	100.0	213.2	230.4	372.2
	42011	-8.6	-29.3	207.7	178.9	269.2	206.0	372.2
23 Exterior Wall	24211	-8.3	-29.3	228.3	206.3	272.1	215.0	372.2
@ EL22.50	24224	-10.7	-29.3	150.0	149.1	297.3	185.6	372.2
~24.60m	34210	-5.2	-29.3	234.8	224.0	174.4	196.8	372.2
	34220	-4.5	-29.3	120.7	90.4	146.8	174.5	372.2
	44201	-5.1	-29.3	156.3	112.0	148.8	192.3	372.2
24 Basemat	90140	-6.9	-23.5	327.4	57.6	88.0	42.9	372.2
@ Wall	90182	-3.6	-23.5	72.2	131.5	135.6	15.4	372.2
Below RCCV	90111	-3.4	-23.5	58.7	-11.7	129.4	133.6	372.2
25 Slab	93140	-11.8	-29.3	189.3	69.1	134.7	80.9	372.2 (223.3)
EL4.65m	93182	-15.6	-29.3	68.0	67.8	-83.6	97.9	372.2 (223.3)
@ RCCV	93111	-14.0	-29.3	-68.3	67.1	71.6	58.9	372.2 (223.3)
26 Slab	96144	-11.6	-29.3	254.6	98.6	271.7	109.7	372.2 (223.3)
EL17.5m	96186	-9.0	-29.3	164.5	90.8	-37.2	-41.8	372.2 (223.3)
@ RCCV	96113	-14.1	-28.8	-94.5	49.0	101.8	133.6	368.2
27 Slab	98472	-13.3	-29.1	174.8	39.5	168.1	41.2	370.3 (222.2)
EL27.0m	98514	-4.4	-29.1	38.8	40.9	-15.1	44.5	370.3 (222.2)
@ RCCV	98424	-10.4	-28.1	23.7	-50.6	-17.9	-10.8	363.0
28 Pool Girder	123054	-8.9	-29.0	30.4	149.3	-28.1	108.7	369.8
@ Storage Pool	123154	-3.0	-29.0	83.7	184.9	70.1	103.8	369.8
29 Pool Girder	123062	-2.9	-28.4	40.2	37.6	40.9	47.0	365.0
@ Cavity	123162	-2.1	-28.4	88.2	63.8	45.2	50.6	365.0
30 Pool Girder	123067	-7.5	-28.4	-4.3	29.2	-38.4	-19.7	365.0
@ Fuel Pool	123167	-6.6	-28.4	7.9	40.2	32.9	14.8	365.0
31 MS Tunnel	150122	-12.4	-29.3	16.7	159.7	-22.0	194.2	372.2
Wall and Slab	96611	-8.2	-29.3	-2.1	18.2	-11.1	216.4	372.2
	98614	-7.6	-29.3	4.7	30.7	-6.2	165.1	372.2

Note: Negative value means compression.

Note *1:		
Wall Below RCCV	Direction 1: Hoop,	Direction 2: Vertical
Exterior Wall	Direction 1: Horizontal,	Direction 2: Vertical
Slab/MS Tunnel Slab	Direction 1: N-S,	Direction 2: E-W
Pool Girder	Direction 1: Horizontal,	Direction 2: Vertical
MS Tunnel Wall	Direction 1: Horizontal,	Direction 2: Vertical
Basemat	Direction 1: Top; Radial; Bottom; N-S,	Direction 2: Top; Circumferential; Bottom; E-W

Note *2: Value in parenthesis indicates the allowable stress of the steel plate.

Table 3G.1-55

Rebar and Concrete Stresses of RB: Selected Load Combination RB-9b

Location	Element ID	Concrete Stress (MPa)		Primary Reinforcement Stress (MPa)				
				Calculated				Allowable
		Calculated	Allowable	Direction 1*		Direction 2*		
				In/Top	Out/Bottom	In/Top	Out/Bottom	
18 Wall	6	-21.1	-29.3	203.9	213.6	28.6	295.0	372.2
Below RCCV	13	-17.8	-29.3	137.0	139.3	-16.5	189.3	372.2
Bottom	24	-15.2	-29.3	182.9	159.3	51.2	184.3	372.2
19 Wall Below	806	-10.9	-29.3	194.4	93.1	205.7	114.1	372.2
Below RCCV	813	-12.2	-29.3	213.0	134.5	172.2	98.8	372.2
Mid-Height	824	-13.6	-29.3	269.2	161.1	210.4	110.0	372.2
20 Wall	1606	-14.2	-29.3	201.0	193.5	-98.0	187.6	372.2
Below RCCV	1613	-17.1	-29.3	138.7	146.2	-126.0	170.0	372.2
Top	1624	-16.3	-29.3	185.8	189.9	-118.2	218.0	372.2
21 Exterior Wall	20011	-20.3	-29.3	333.7	240.6	335.8	339.9	372.2
@ EL-11.50	20023	-8.7	-28.9	24.9	-18.6	75.8	-39.6	368.9
~-10.50m	30010	-10.6	-29.3	190.9	216.5	84.4	334.6	372.2
	30020	-6.1	-29.3	22.5	30.0	-9.6	83.2	372.2
	40001	-6.4	-29.3	52.0	20.1	-8.8	131.0	372.2
	40011	-9.3	-29.3	246.6	256.7	185.0	366.1	372.2
22 Exterior Wall	22011	-11.5	-29.3	352.0	272.6	313.2	356.7	372.2
@ EL4.65	22023	-10.0	-29.3	135.4	93.8	143.5	105.1	372.2
~6.60m	32010	-6.3	-29.3	302.1	268.8	310.7	277.2	372.2
	32020	-6.4	-29.3	109.7	161.6	195.9	274.2	372.2
	42001	-7.8	-29.3	127.9	128.4	194.9	225.9	372.2
	42011	-8.5	-29.3	212.6	187.7	276.7	212.7	372.2
23 Exterior Wall	24211	-8.1	-29.3	293.3	195.1	304.3	228.9	372.2
@ EL22.50	24224	-8.3	-29.3	252.4	50.2	255.1	292.4	372.2
~24.60m	34210	-5.2	-29.3	298.3	333.3	193.2	300.3	372.2
	34220	-6.7	-29.3	161.3	67.2	161.1	122.2	372.2
	44201	-5.0	-29.3	209.1	79.4	198.3	196.7	372.2
24 Basemat	90140	-7.2	-23.5	303.4	57.4	87.0	41.3	372.2
@ Wall	90182	-4.1	-23.5	47.2	91.2	198.5	17.9	372.2
Below RCCV	90111	-4.0	-23.5	66.7	11.8	181.0	89.8	372.2
25 Slab	93140	-14.2	-29.3	233.7	100.4	185.0	101.9	372.2 (223.3)
EL4.65m	93182	-20.2	-29.3	84.2	83.7	-104.2	122.2	372.2 (223.3)
@ RCCV	93111	-18.0	-29.3	-86.3	90.6	86.2	73.0	372.2 (223.3)
26 Slab	96144	-12.0	-29.3	261.0	124.4	337.1	133.3	372.2 (223.3)
EL17.5m	96186	-11.0	-29.3	204.8	113.8	-46.6	42.3	372.2 (223.3)
@ RCCV	96113	-15.0	-28.8	-97.7	39.0	122.4	150.2	368.2
27 Slab	98472	-13.2	-27.6	57.3	105.0	91.1	94.2	359.4 (215.6)
EL27.0m	98514	-15.8	-27.6	-21.8	77.9	-23.6	97.7	359.4 (215.6)
@ RCCV	98424	-10.4	-28.1	163.7	-38.5	241.7	120.9	363.0
28 Pool Girder	123054	-6.8	-29.0	32.7	222.9	81.8	249.0	369.8
@ Storage Pool	123154	-3.1	-29.0	72.1	212.7	78.2	117.9	369.8
29 Pool Girder	123062	-12.4	-27.4	37.0	221.5	7.7	194.7	358.3
@ Cavity	123162	-9.6	-27.4	58.6	263.4	12.2	161.4	358.3
30 Pool Girder	123067	-14.4	-27.4	9.2	121.5	-48.9	73.7	358.3
@ Fuel Pool	123167	-8.1	-27.4	23.7	154.2	9.7	133.3	358.3
31 MS Tunnel	150122	-12.7	-29.3	18.3	151.6	-26.1	185.7	372.2
Wall and Slab	96611	-8.0	-29.3	-2.3	16.2	-8.9	220.3	372.2
	98614	-7.6	-29.3	5.1	18.4	-12.2	136.9	372.2

Note: Negative value means compression.

Note *1:

Wall Below RCCV	Direction 1: Hoop,	Direction 2: Vertical
Exterior Wall	Direction 1: Horizontal,	Direction 2: Vertical
Slab/MS Tunnel Slab	Direction 1: N-S,	Direction 2: E-W
Pool Girder	Direction 1: Horizontal,	Direction 2: Vertical
MS Tunnel Wall	Direction 1: Horizontal,	Direction 2: Vertical
Basemat	Direction 1: Top; Radial; Bottom; N-S,	Direction 2: Top; Circumferential; Bottom; E-W

Note *2: Value in parenthesis indicates the allowable stress of the steel plate.

Table 3G.1-56

Transverse Shear of RB

Location	Element ID	Load ID	d (m)	pv (%)	Shear Force (MN/m) Vu	Vc	Vs	ϕVn	Vu/ϕVn
18 Wall	6	RB-9a	1.59	0.721	2.73	0.30	4.73	4.28	0.637
Below RCCV	13	RB-9a	1.59	0.721	2.09	0.57	4.73	4.51	0.464
Bottom	24	RB-9b	1.59	0.721	1.08	0.94	4.74	4.83	0.223
19 Wall Below	806	RB-9a	1.57	0.270	0.12	0.14	1.75	1.61	0.075
Below RCCV	813	RB-9b	1.57	0.270	0.18	0.22	1.75	1.67	0.109
Mid-Height	824	RB-9a	1.57	0.270	0.22	0.25	1.75	1.71	0.126
20 Wall	1606	RB-9b	1.57	0.540	2.68	1.46	3.50	4.21	0.636
Below RCCV	1613	RB-8b	1.57	0.540	4.69	4.26	3.50	6.59	0.711
Top	1624	RB-9b	1.57	0.540	3.41	2.34	3.50	4.96	0.689
21 Exterior Wall	20011	RB-9b	1.63	0.484	3.81	1.96	3.27	4.44	0.856
@ EL-11.50	20023	RB-9b	1.59	0.484	2.06	3.31	3.18	5.52	0.373
~-10.50m	30010	RB-9b	1.65	0.177	0.83	0.59	1.21	1.53	0.543
	30020	RB-9a	1.69	0.177	0.82	3.26	1.24	3.82	0.214
	40001	RB-9a	1.73	0.177	1.07	3.52	1.27	4.07	0.262
	40011	RB-9a	1.73	0.177	0.16	0.19	1.27	1.24	0.128
22 Exterior Wall	22011	RB-9b	1.19	0.484	1.11	0.00	2.38	2.02	0.549
@ EL4.65	22023	RB-9a	1.18	0.484	0.75	3.71	2.36	5.16	0.146
~6.60m	32010	RB-9b	1.24	0.177	0.33	0.00	0.91	0.77	0.424
	32020	RB-8a	1.24	0.177	0.11	0.13	0.90	0.88	0.123
	42001	RB-4	1.19	0.242	0.18	0.21	1.19	1.19	0.150
	42011	RB-4	1.22	0.242	0.03	0.04	1.22	1.07	0.031
23 Exterior Wall	24211	RB-9a	1.15	0.484	1.50	0.00	2.30	1.96	0.769
@ EL22.50	24224	RB-9b	1.19	0.968	1.30	0.02	4.65	3.97	0.327
~24.60m	34210	RB-9b	1.24	0.177	0.26	0.00	0.91	0.77	0.340
	34220	RB-8a	1.26	0.710	0.24	0.28	3.69	3.37	0.070
	44201	RB-4	1.26	0.968	2.41	0.95	4.89	4.96	0.485
24 Basemat	90140	RB-9b	3.53	0.801	10.74	7.16	11.69	16.03	0.670
@ Wall	90182	RB-9b	3.51	0.801	7.41	6.13	11.64	15.10	0.491
Below RCCV	90111	RB-9b	3.37	0.801	2.64	1.67	11.15	10.90	0.242
25 Slab	93140	RB-9b	1.00	0.500	0.37	0.27	2.07	1.99	0.184
EL4.65m	93182	RB-9b	1.00	0.500	2.54	1.57	2.07	3.09	0.822
@ RCCV	93111	RB-9b	1.00	0.500	1.84	1.57	2.07	3.09	0.594
26 Slab	96144	RB-9a	0.80	0.500	0.07	0.08	1.65	1.47	0.046
EL17.5m	96186	RB-9b	1.00	0.500	1.15	2.68	2.07	4.03	0.286
@ RCCV	96113	RB-4	1.34	0.500	0.82	1.54	2.76	3.66	0.225
27 Slab	98472	RB-9a	0.63	0.500	1.45	1.69	1.29	2.53	0.572
EL27.0m	98514	RB-9b	1.00	0.500	1.33	1.28	2.07	2.84	0.467
@ RCCV	98424	RB-9b	1.95	0.710	8.16	4.95	5.74	9.08	0.899
28 Pool Girder	123054	RB-8b	1.24	0.484	0.10	0.12	2.48	2.21	0.046
@ Storage Pool	123154	RB-4	1.25	0.484	0.16	0.19	2.50	2.28	0.069
29 Pool Girder	123062	RB-9a	1.25	0.242	0.12	0.15	1.25	1.19	0.105
@ Cavity	123162	RB-8a	1.23	0.242	0.09	0.11	1.23	1.13	0.081
30 Pool Girder	123067	RB-9b	1.25	0.484	1.10	3.75	2.49	5.31	0.207
@ Fuel Pool	123167	RB-8a	1.24	0.484	0.21	0.25	2.48	2.32	0.092
31 MS Tunnel	150122	RB-9a	1.04	0.177	0.04	0.04	0.76	0.68	0.053
Wall and Slab	96611	RB-9a	1.34	0.500	0.47	1.60	2.76	3.70	0.126
	98614	RB-9b	2.14	0.500	0.23	0.27	4.42	3.99	0.058

Table 3G.1-57

Factors of Safety for Foundation Stability

Load Combination	Overturning		Sliding		Floatation	
	Required	Actual	Required	Actual	Required	Actual
D + H + E'	1.1	111.1	1.1	1.41	--	--
D + F'	--	--	--	--	1.1	3.48

Where,
D = Dead Load
H = Lateral soil pressure
E' = Safe Shutdown Earthquake
F' = Buoyant forces of design basis flood

Table 3G.1-58

Maximum Soil Bearing Stress Involving SSE

	Site Condition*		
	Soft (V_s = 300 m/sec)	Medium (V_s = 800 m/sec)	Hard ($V_s \geq$ 1700 m/sec)
Bearing Stress (MPa)	2.7	7.3	5.4

* See Table 3A.3-1 for site properties. For site specific application, use the larger value or a linearly interpolated value of the applicable range of shear wave velocities at the foundation level.

Table 3G.1-59

Stress Calculation Results for Basemat Uplift Analysis

Seismic Force Direction	Soil Condition	Element ID	Load	Concrete Stress (MPa)		Primary Reinforcement Stress (MPa)				
				Calculated	Allowable	Radial		Circumferential		Allowable
						Top	Bottom	Top	Bottom	
S to N	Soft	80275	SSE+LOCA 6min	-7.8	-23.5	-45.2	8.6	-7.2	17.2	372.2
			SSE+LOCA 72h	-8.8	-23.5	-49.8	15.4	-8.2	28.1	372.2
		90402	SSE+LOCA 6min	-5.0	-23.5	-27.0	17.7	54.5	42.9	372.2
			SSE+LOCA 72h	-4.0	-23.5	-18.9	10.1	58.3	40.2	372.2
		90408	SSE+LOCA 6min	-3.0	-23.5	19.0	-10.3	51.6	-3.2	372.2
			SSE+LOCA 72h	-3.0	-23.5	17.5	-10.5	51.7	-3.0	372.2

Seismic Force Direction	Soil Condition	Element ID	Load	Concrete Stress (MPa)		Primary Reinforcement Stress (MPa)				
				Calculated	Allowable	Radial		Circumferential		Allowable
						Top	Bottom	Top	Bottom	
W to E	Soft	80262	SSE+LOCA 6min	-17.9	-23.5	-58.7	175.6	-20.4	191.1	372.2
			SSE+LOCA 72h	-18.4	-23.5	-60.8	183.5	-20.2	193.4	372.2
		80462	SSE+LOCA 6min	-12.0	-23.5	227.7	-9.8	11.5	-48.2	372.2
			SSE+LOCA 72h	-11.5	-23.5	225.6	-8.4	-11.5	-47.2	372.2
E to W	Soft	80287	SSE+LOCA 6min	-14.6	-23.5	-49.1	140.8	-14.6	149.7	372.2
			SSE+LOCA 72h	-15.3	-23.5	-52.1	147.2	-15.4	150.4	372.2
		80462	SSE+LOCA 6min	-8.5	-23.5	-43.9	166.6	71.4	113.5	372.2
			SSE+LOCA 72h	-9.0	-23.5	-43.9	175.4	64.9	123.6	372.2

Note: Because the seismic force in N to S direction does not cause the basemat uplift, its calculation result is not included in this table. Refer to Figure 3G.1-60.

Table 3G.1-60

PCCS Condenser and Supports Stress Summary

Component	Stress Category	Test			Design			Service Level A/B			Service Level C/D		
		Calculated Stress (MPa)	Allowable Stress (MPa)	Stress Margin (%)	Calculated Stress (MPa)	Allowable Stress (MPa)	Stress Margin (%)	Calculated Stress (MPa)	Allowable Stress(1) (MPa)	Stress Margin (%)	Calculated Stress (MPa)	Allowable Stress(2) (MPa)	Stress Margin (%)
Upper Header	P_m	11.8	119.8	90	11.8	114.9	90	16.8	114.9	85	37.8	137.9	73
	$P_L + P_b$	11.8	183.7	94	11.8	150.6	92	16.8	150.6	89	39.8	180.7	78
Lower Header	P_m	11.8	119.8	90	11.8	114.9	90	24.8	114.9	78	47.8	137.9	65
	$P_L + P_b$	11.8	183.7	94	11.8	150.6	92	26.8	150.6	82	55.8	180.7	69
Tubes	P_m	11.4	119.8	91	11.4	114.9	90	15.4	114.9	87	19.4	137.9	86
	$P_L + P_b$	11.4	183.7	94	11.4	150.6	92	33.4	150.6	78	66.4	180.7	63
Feed Line	P_m	9.9	119.8	92	9.9	114.9	91	23.9	114.9	79	79.9	137.9	42
	$P_L + P_b$	9.9	183.7	95	9.9	150.6	93	29.9	150.6	80	110.9	180.7	39
Steam line	P_m	10.9	119.8	91	10.9	114.9	91	25.9	114.9	77	80.9	137.9	41
	$P_L + P_b$	10.9	183.7	94	10.9	150.6	93	31.9	150.6	79	112.9	180.7	38
Steam Distributor	P_m	12.6	119.8	89	12.6	114.9	89	24.6	114.9	79	67.6	137.9	51
	$P_L + P_b$	12.6	183.7	93	12.6	150.6	92	26.6	150.6	82	73.6	180.7	59
Condensate Lines	P_m	12.6	119.8	89	12.6	114.9	89	31.6	114.9	73	66.6	137.9	52
	$P_L + P_b$	12.6	183.7	93	12.6	150.6	92	37.6	150.6	75	80.6	180.7	55
Header Cover	P_m	87.0	119.8	27	87.0	114.9	24	89.0	114.9	23	92.0	114.9	20
	$P_L + P_b$	87.0	183.7	53	87.0	150.6	42	89.0	150.6	41	92.0	180.7	49
Header Bolt	Average Stress	70.3	144.7	51	70.3	110.1	36	70.3	220.2	68	70.3	220.2	68
Support Saddle	P_m	Negligible						29.0	112.6	74	87.0	168.9	48
	$P_L + P_b$							30.0	168.9	82	88.0	253.4	65
	Shear							9.0	67.6	87	26.0	101.3	74
Truss Support Structure	Tension							14.0	76.6	82	69.0	114.9	40
	Shear							3.0	51.1	94	12.0	76.6	84
	Compression							14.0	47.9	71	69.0	71.9	4
	Bending							14.0	84.3	83	70.0	126.4	45

(1) Allowable stress values correspond to Level A.

(2) Allowable stress values correspond to Level C.

Figure 3G.1-1. RB and FB Concrete Outline Plan at EL -11500

Figure 3G.1-2. RB and FB Concrete Outline Plan at EL 4650

Figure 3G.1-3. RB and FB Concrete Outline Plan at EL 17500

Figure 3G.1-4. RB and FB Concrete Outline Plan at EL 27000

Figure 3G.1-5. RB Concrete Outline Plan at EL 34000

Figure 3G.1-6. RB and FB Concrete Outline N-S Section

Figure 3G.1-7. RB and FB Concrete Outline E-W Section

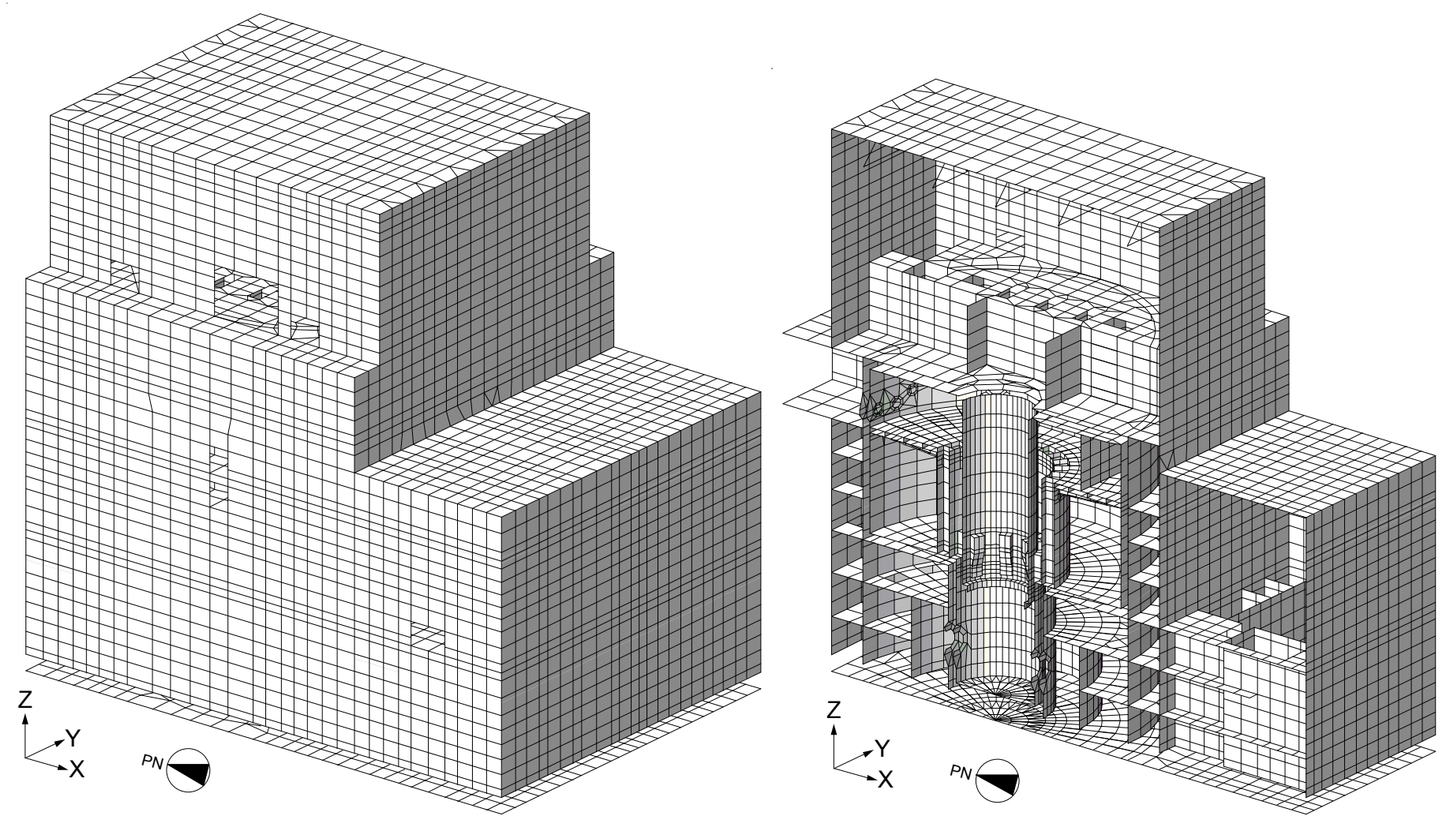

Whole View Cut View

Figure 3G.1-8. Finite Element Model of RB/FB (Isometric View)

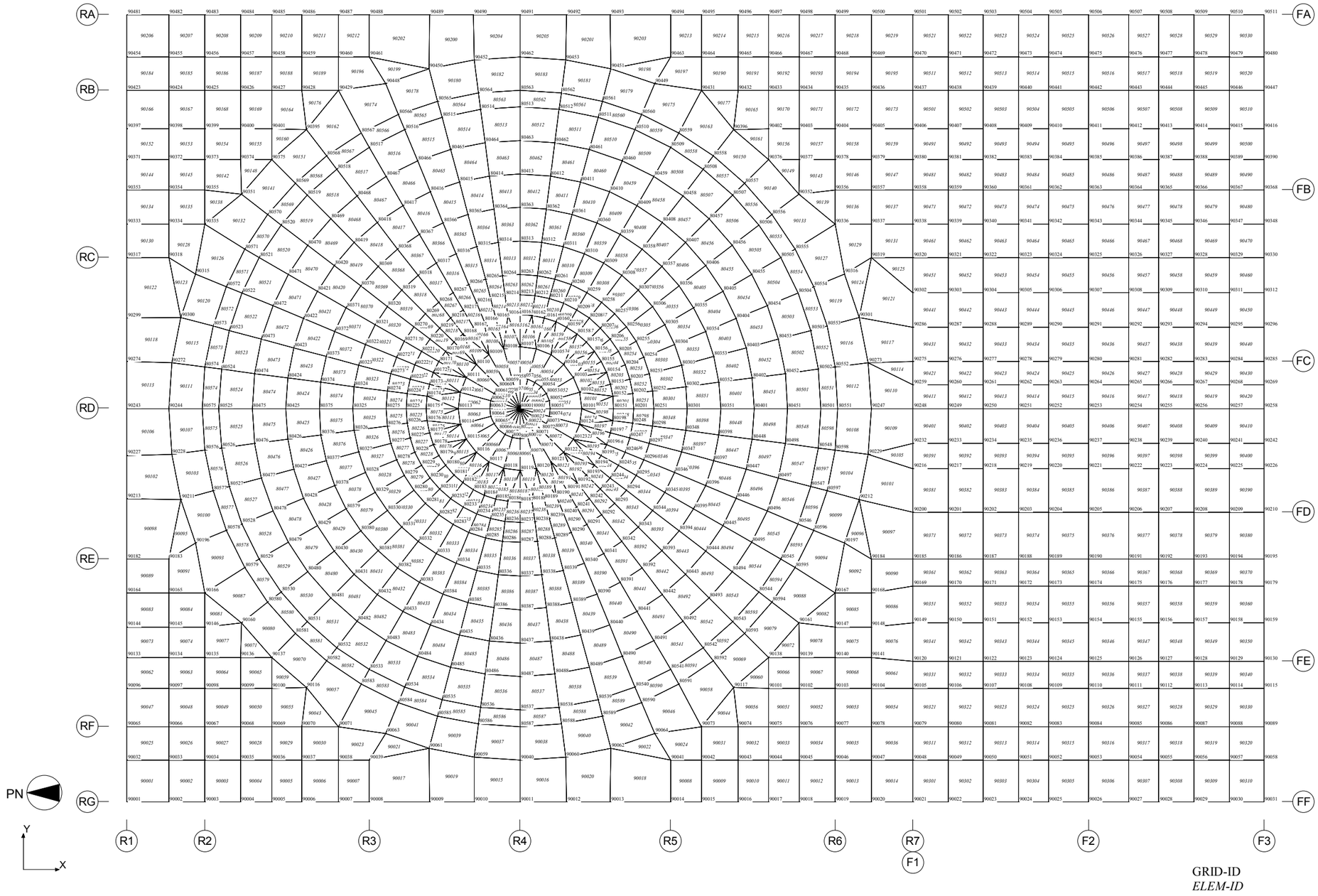

Figure 3G.1-9. Finite Element Model of RB/FB (Foundation Mat)

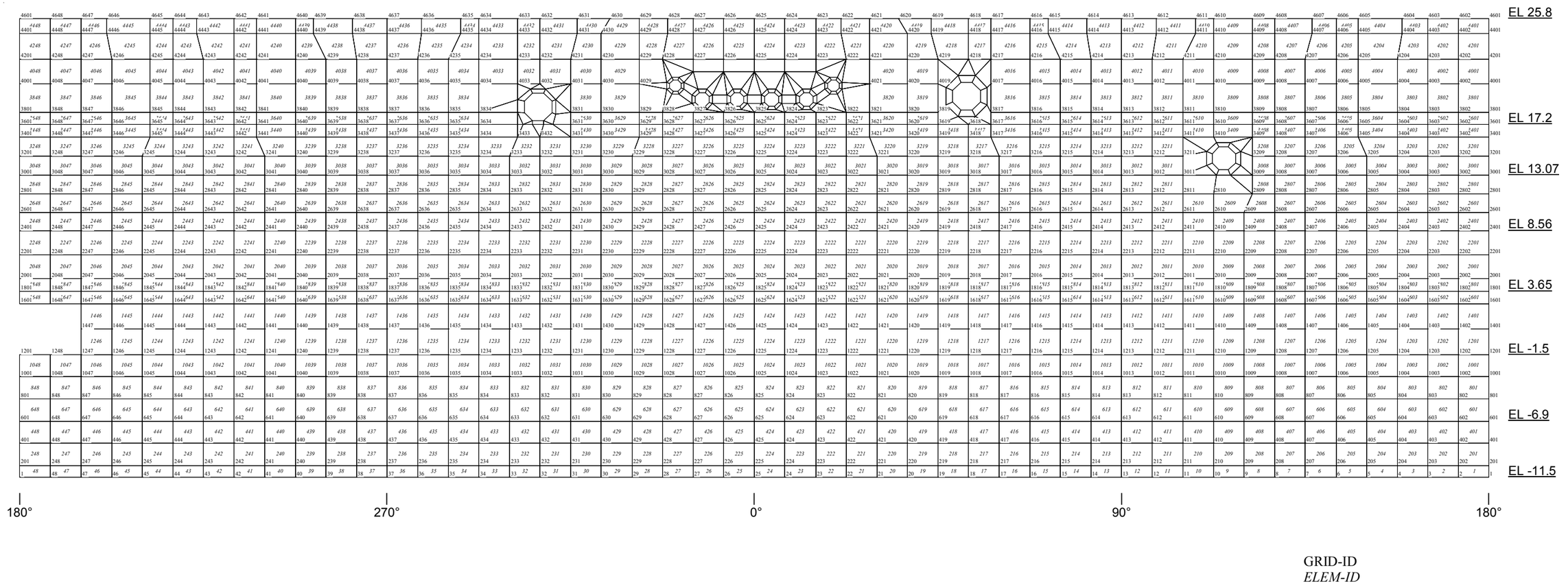

Figure 3G.1-10. Finite Element Model of RB/FB (RCCV Wall)

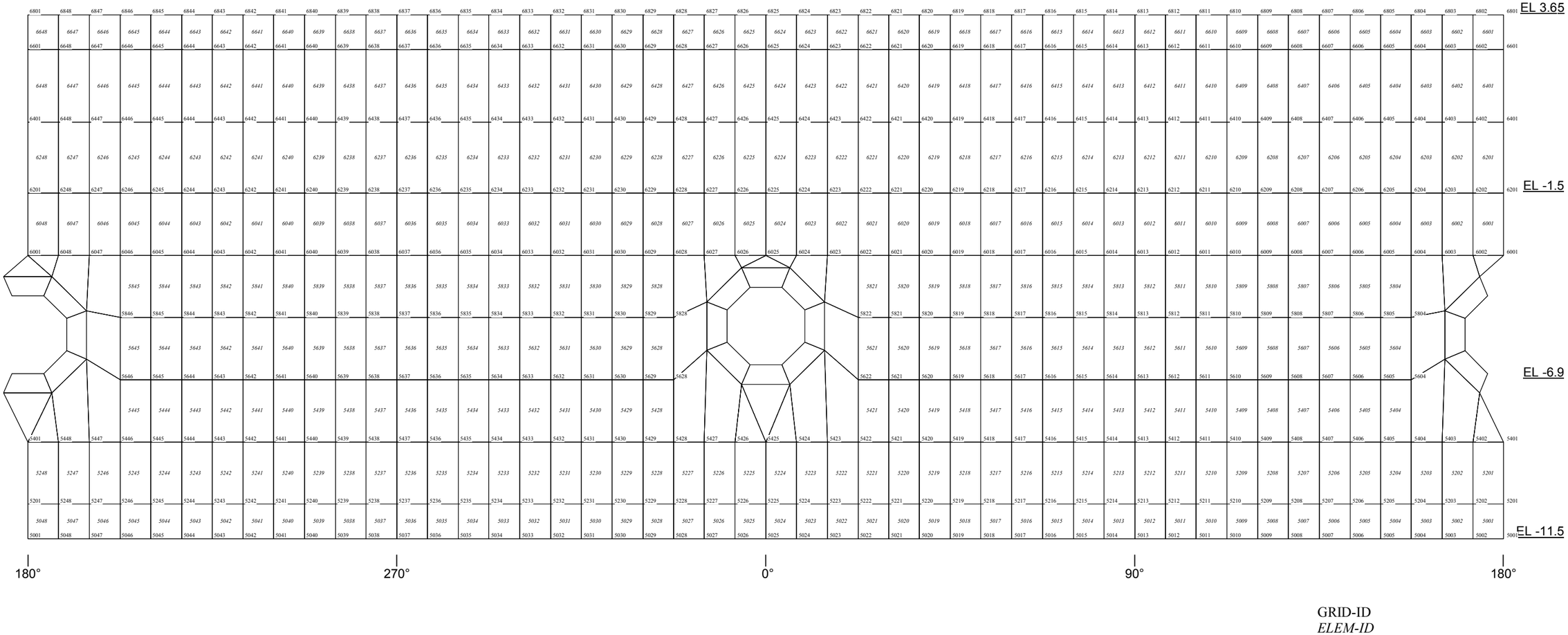

Figure 3G.1-11. Finite Element Model of RB/FB (RPV Pedestal)

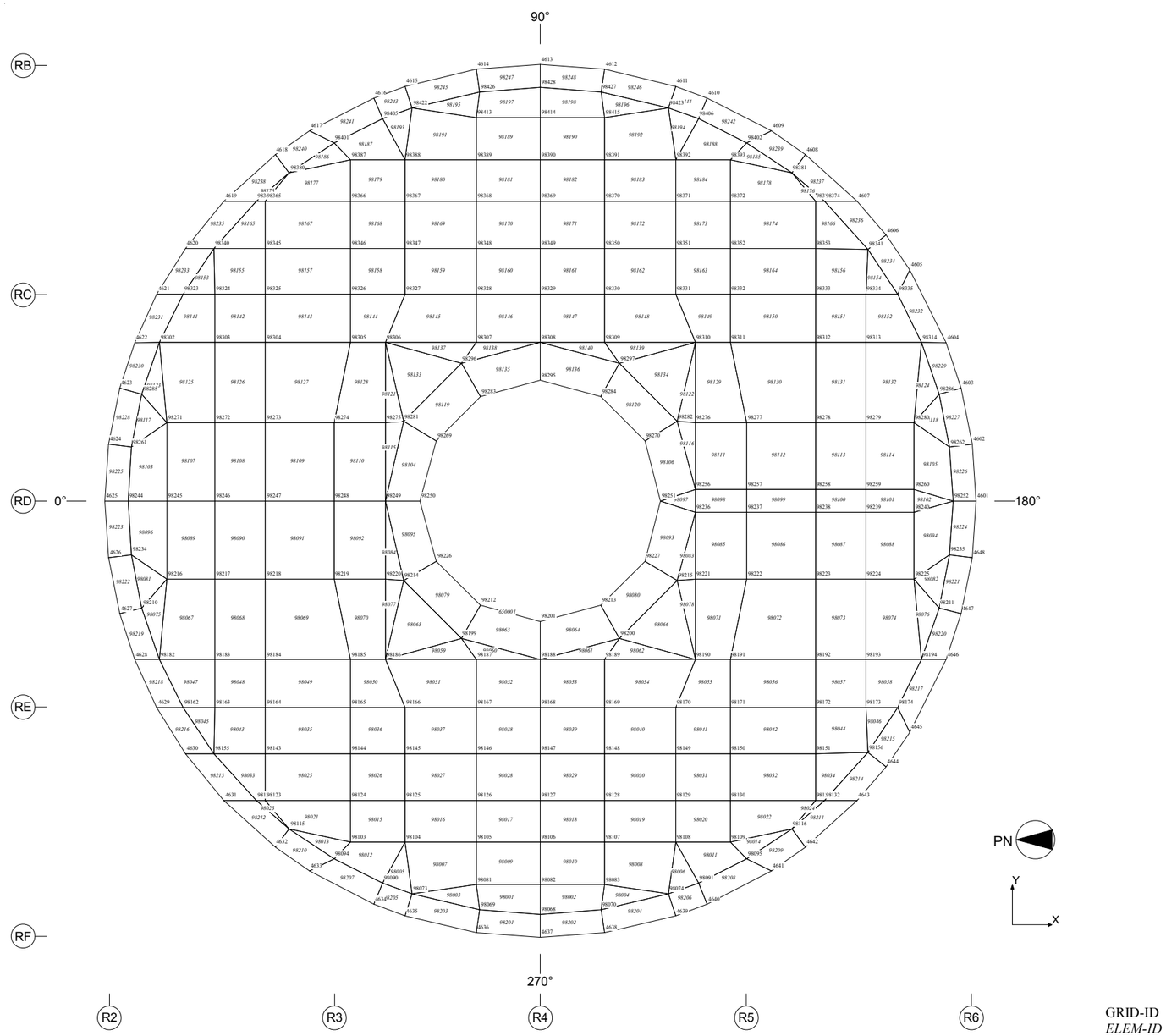

Figure 3G.1-12. Finite Element Model of RB/FB (Top Slab)

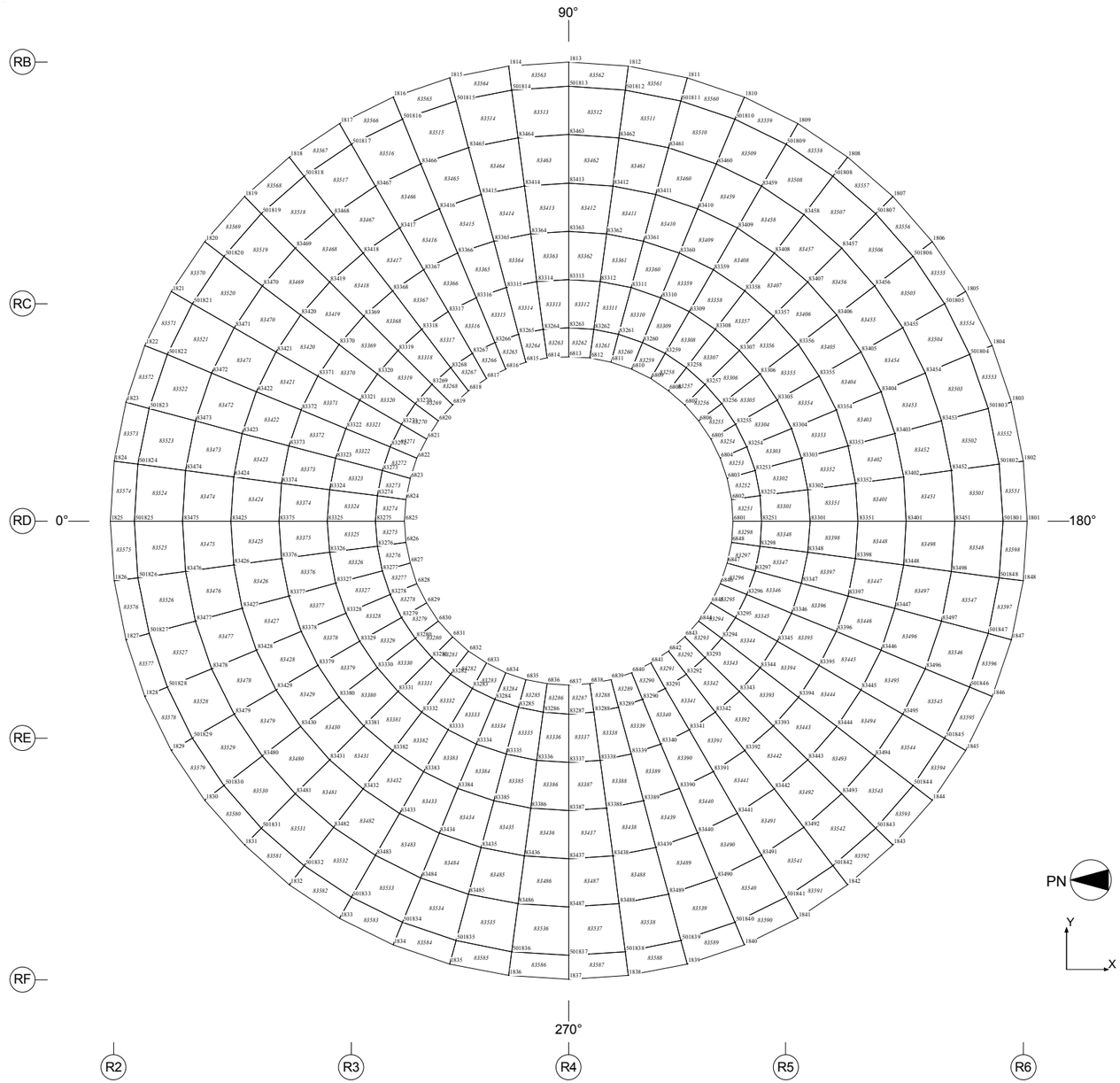

Figure 3G.1-13. Finite Element Model of RB/FB (Suppression Pool Slab)

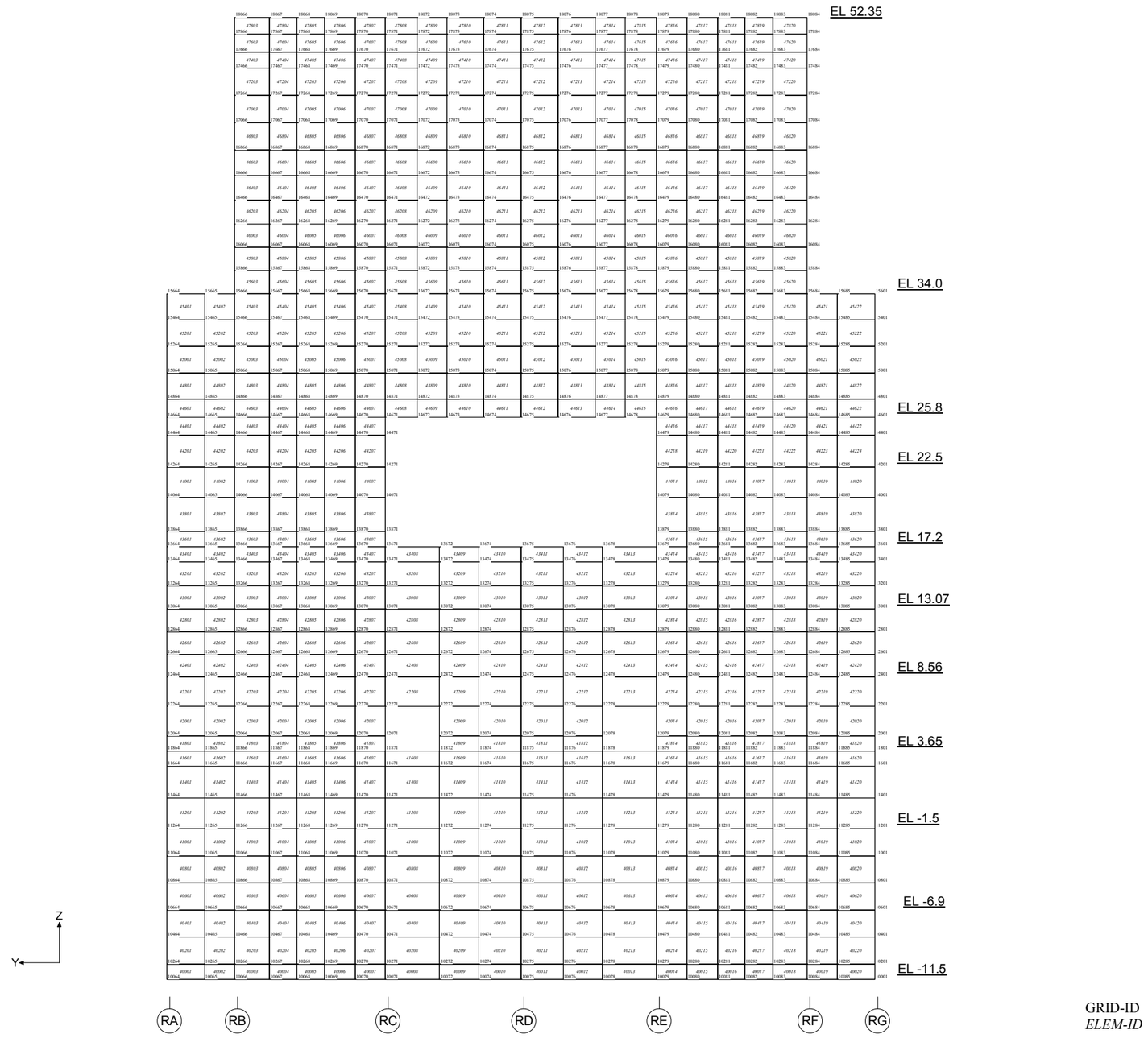

Figure 3G.1-14. Finite Element Model of RB/FB (External Wall: North Side)

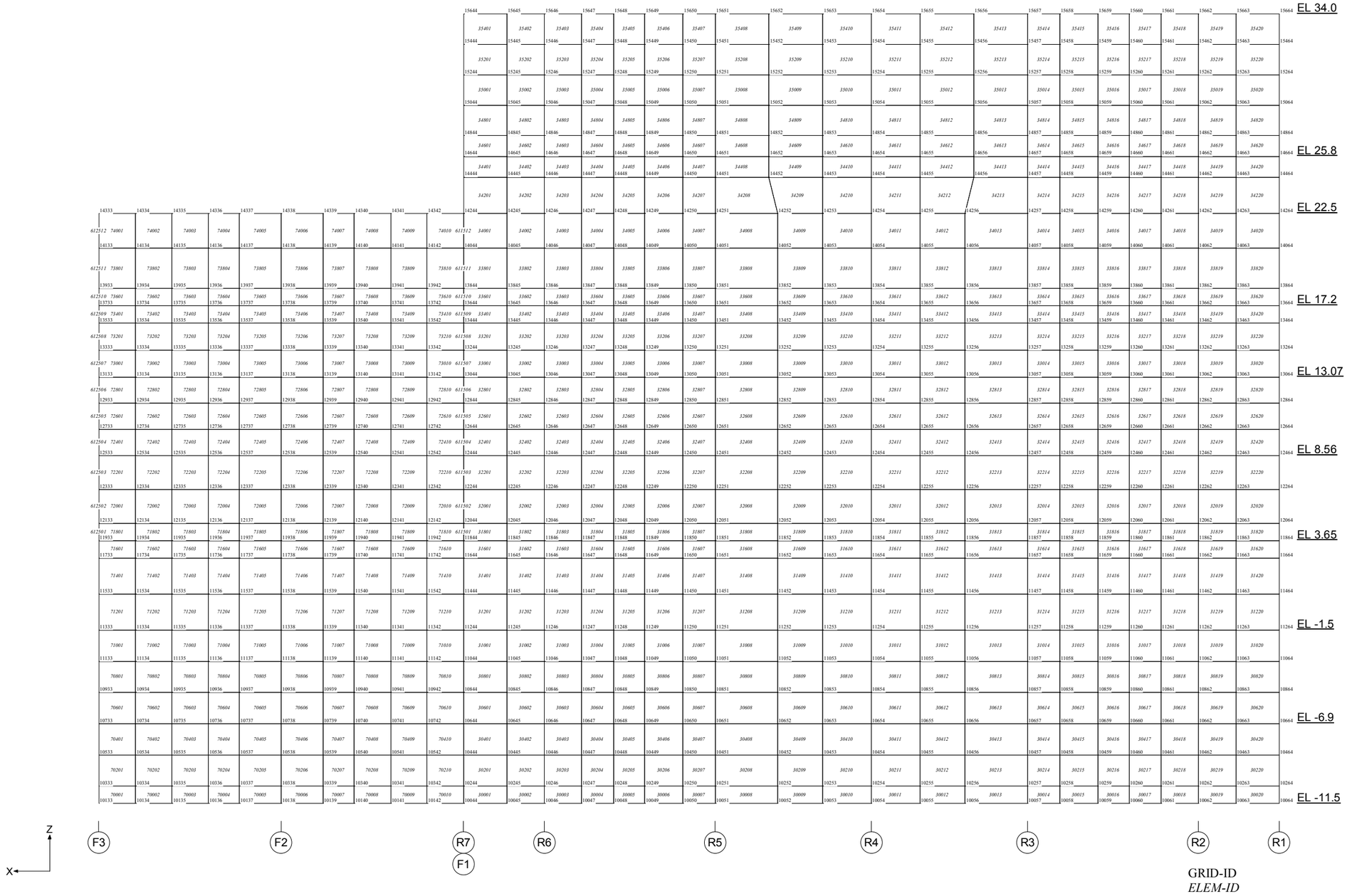

Figure 3G.1-15. Finite Element Model of RB/FB (External Wall: East Side))

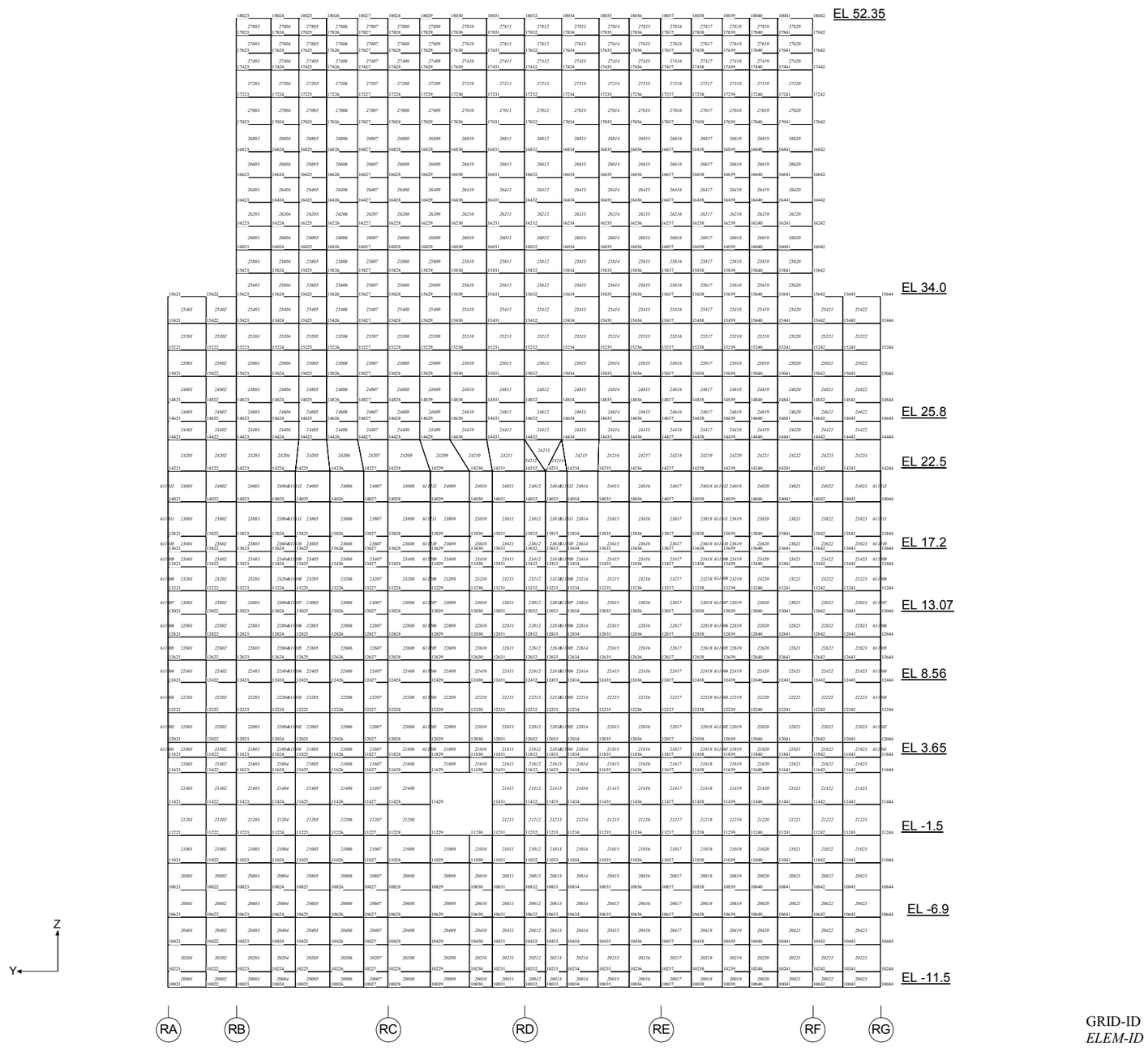

Figure 3G.1-16. Finite Element Model of RB/FB (Internal Wall on R7/F1 Column Line)

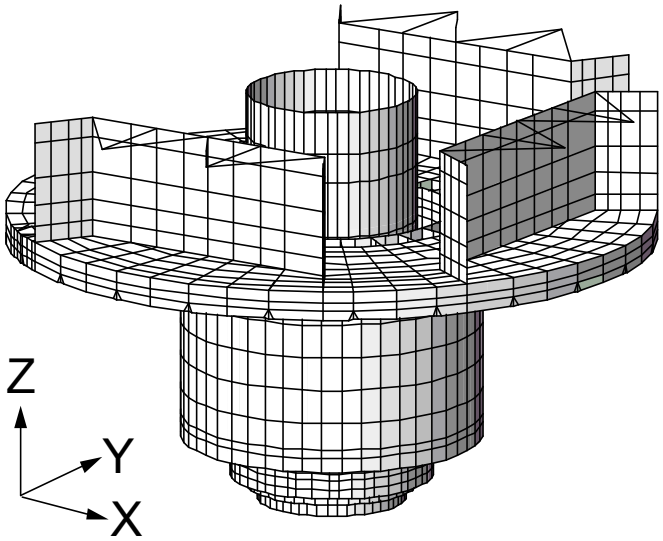

Whole View

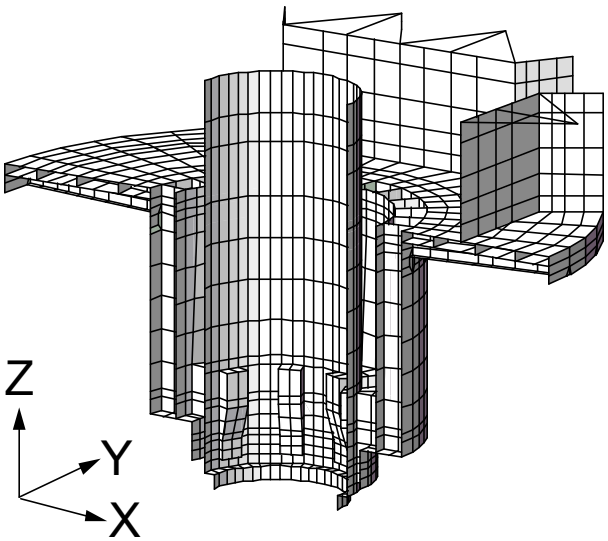

Cut View

Figure 3G.1-17. Finite Element Model of RB/FB (RCCV Internals)

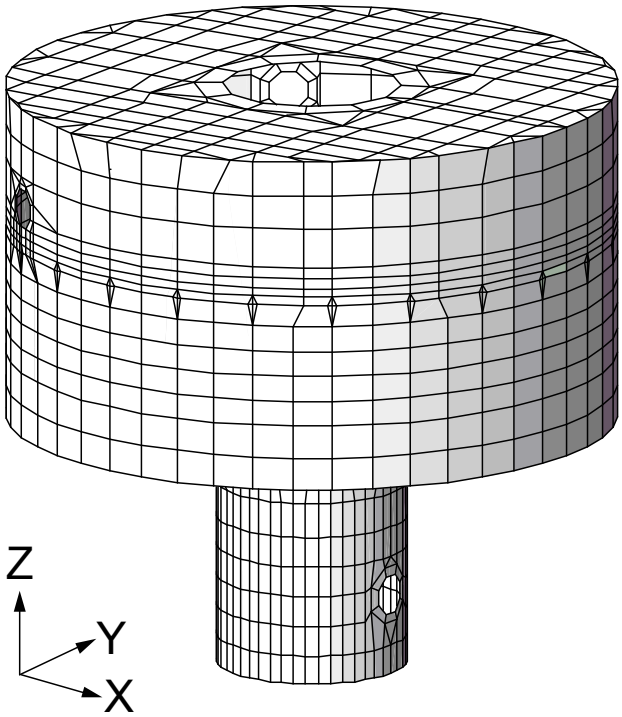

Whole View

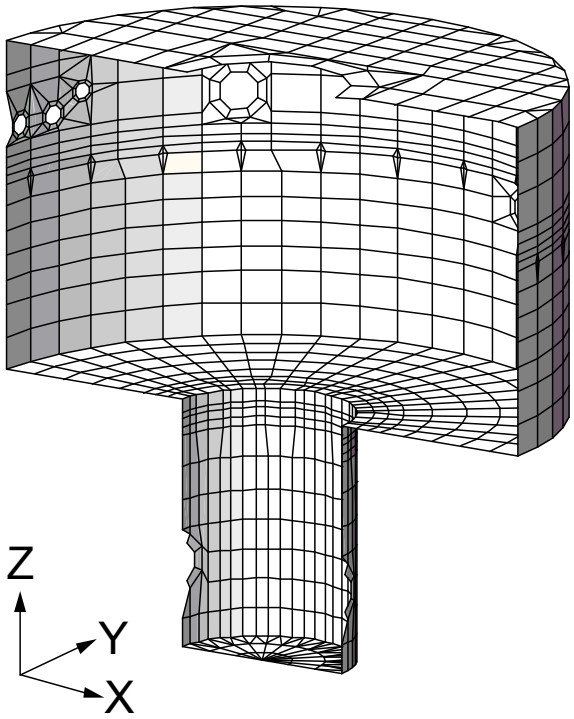

Cut View

Figure 3G.1-18. Finite Element Model of RB/FB (RCCV Liner)

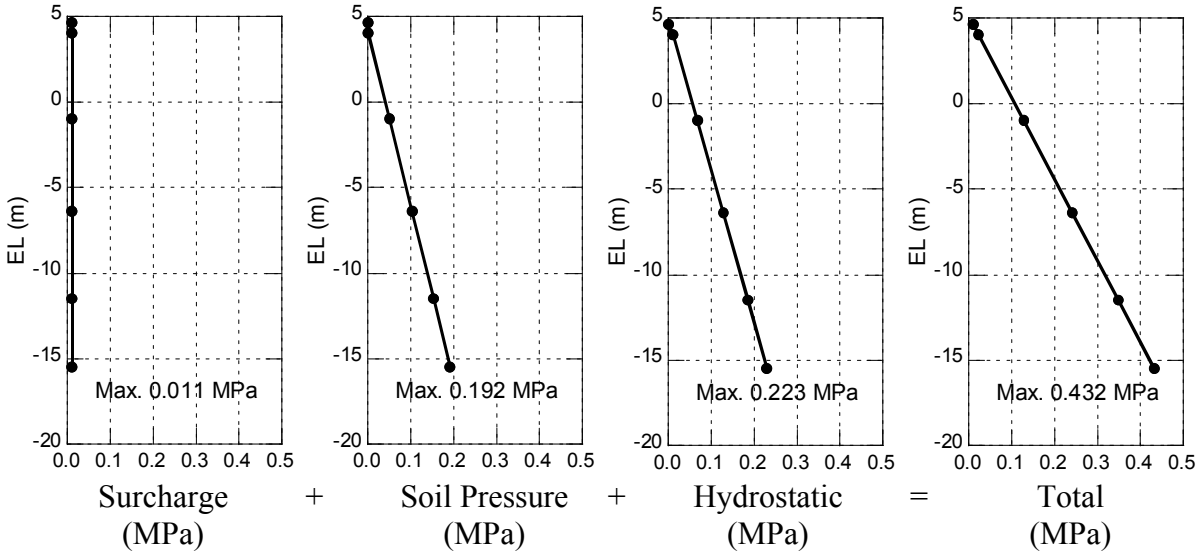

Figure 3G.1-19. Soil Pressure at Rest

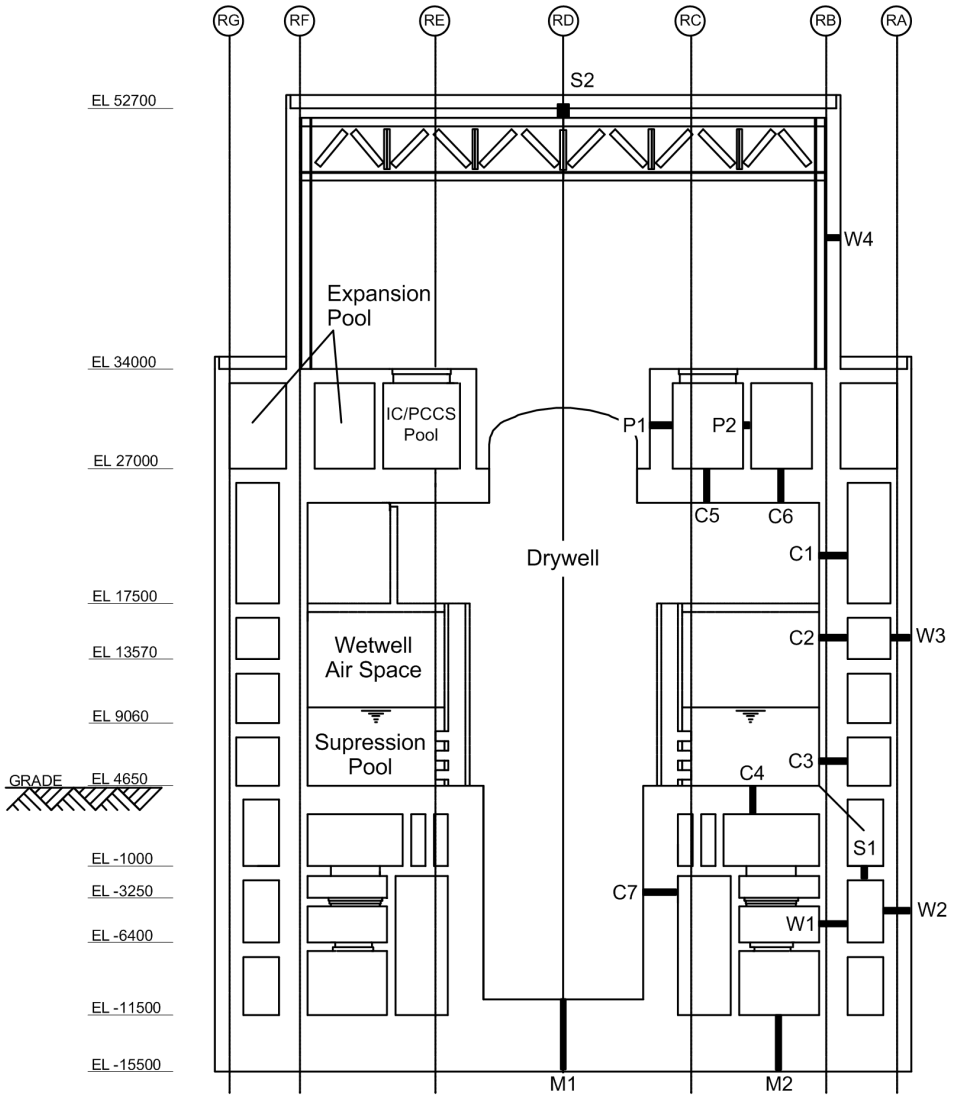

Figure 3G.1-20. Sections Where Thermal Loads Are Defined

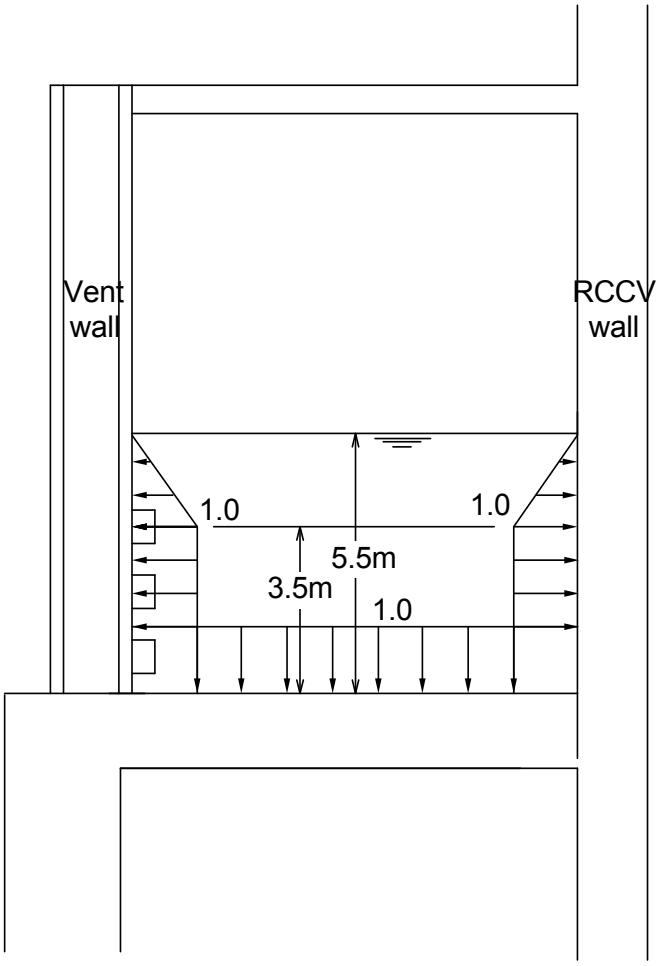

CO Peak Positive Pressure = 186 kPaG
CO Peak Negative Pressure = -186 kPaG
Dynamic Load Factor (DLF) = 2.0

Figure 3G.1-21. Condensation Oscillation (CO) Pressure Loads

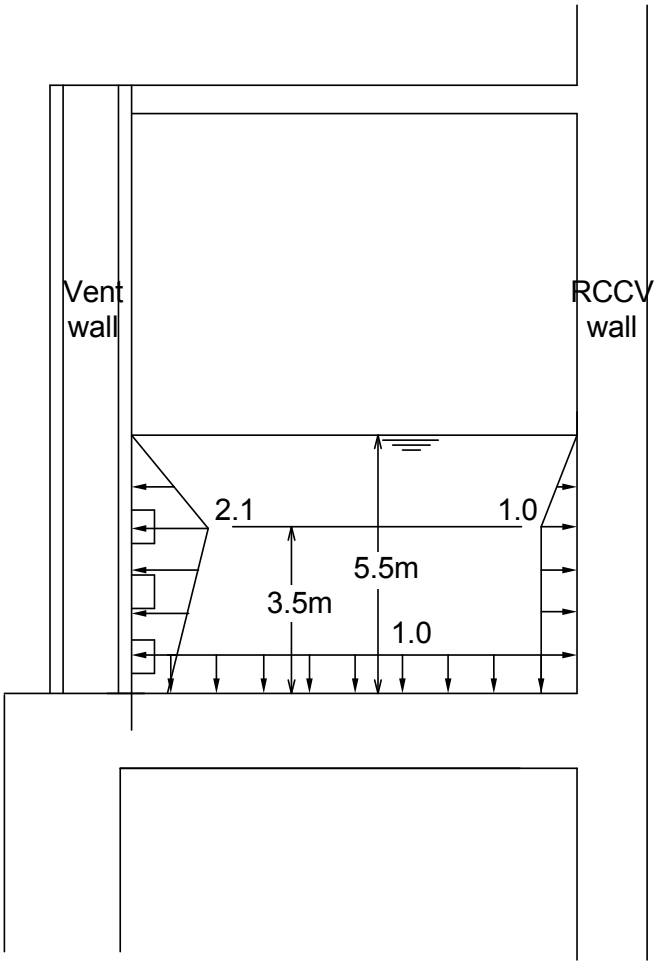

CHUG Peak Positive Pressure = 91 kPaG
CHUG Peak Negative Pressure = -66 kPaG
Dynamic Load Factor (DLF) = 2.0

Figure 3G.1-22. Chugging (CHUG) Pressure Loads

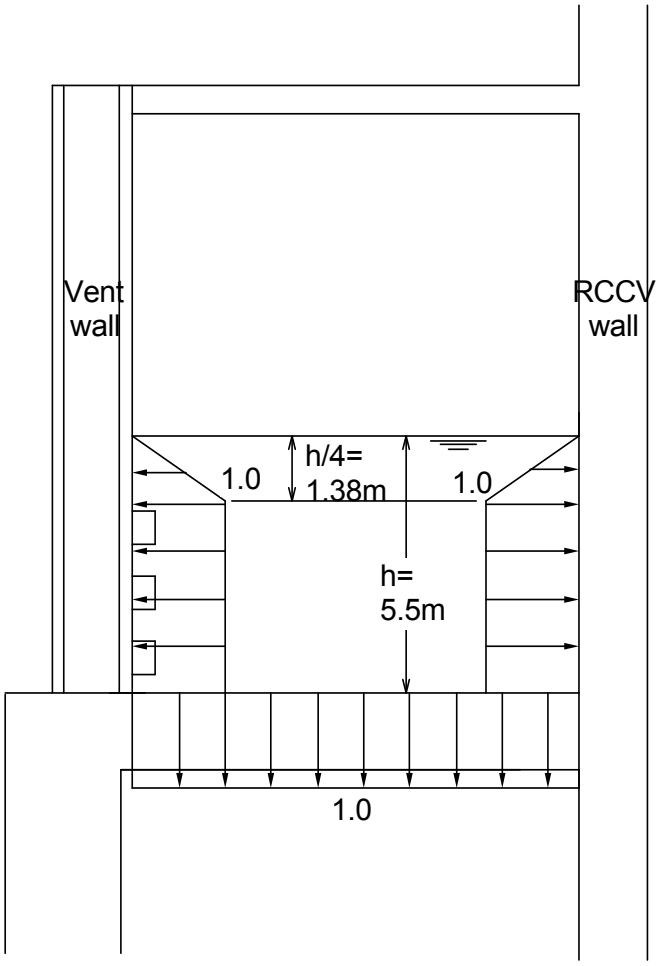

SRV Peak Positive Pressure = 152 kPaG
SRV Peak Negative Pressure = -63 kPaG
Dynamic Load Factor (DLF) = 2.0

Figure 3G.1-23. SRV Pressure Loads

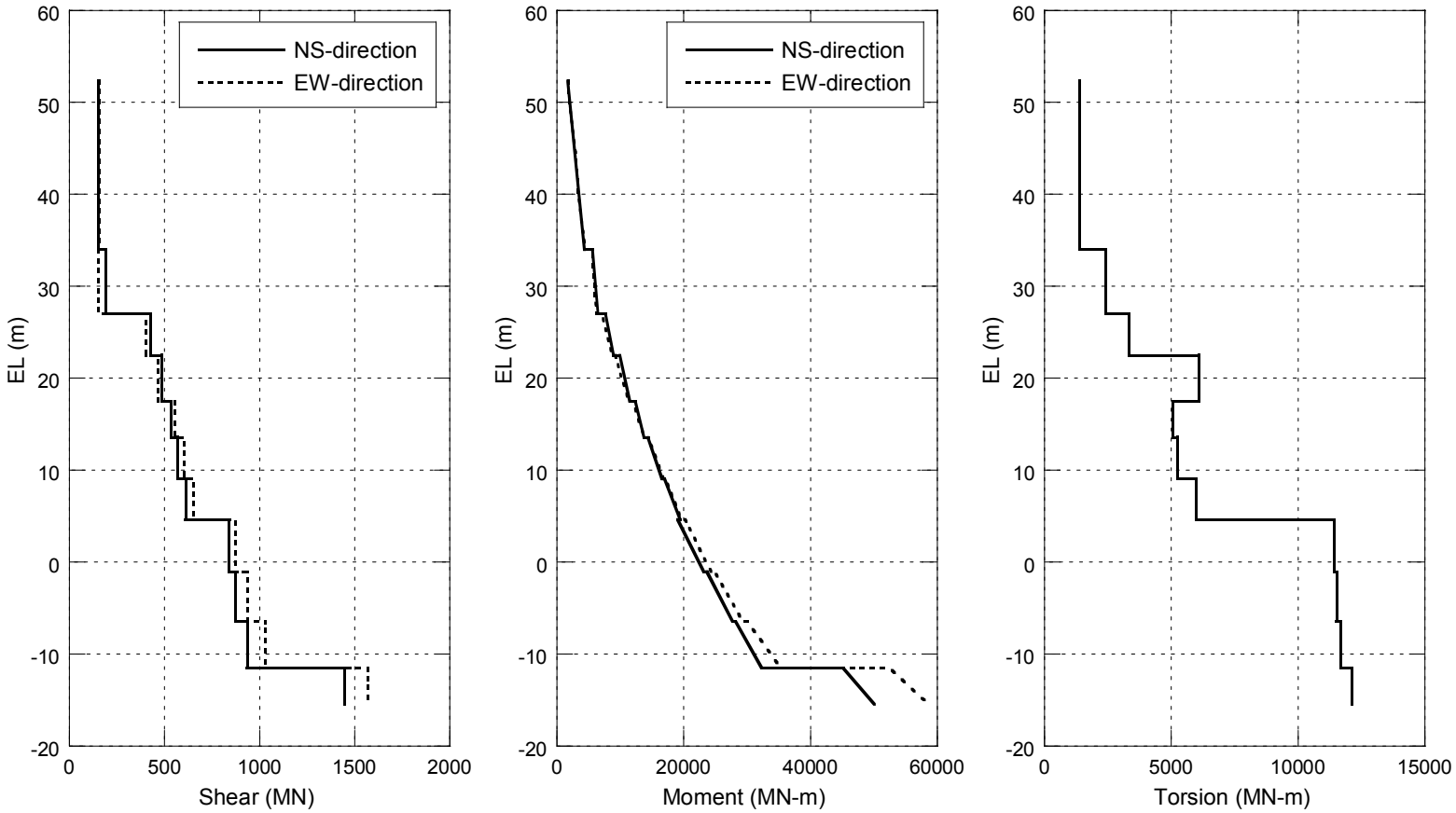

Figure 3G.1-24. Design Seismic Shears and Moments for RB and FB Walls

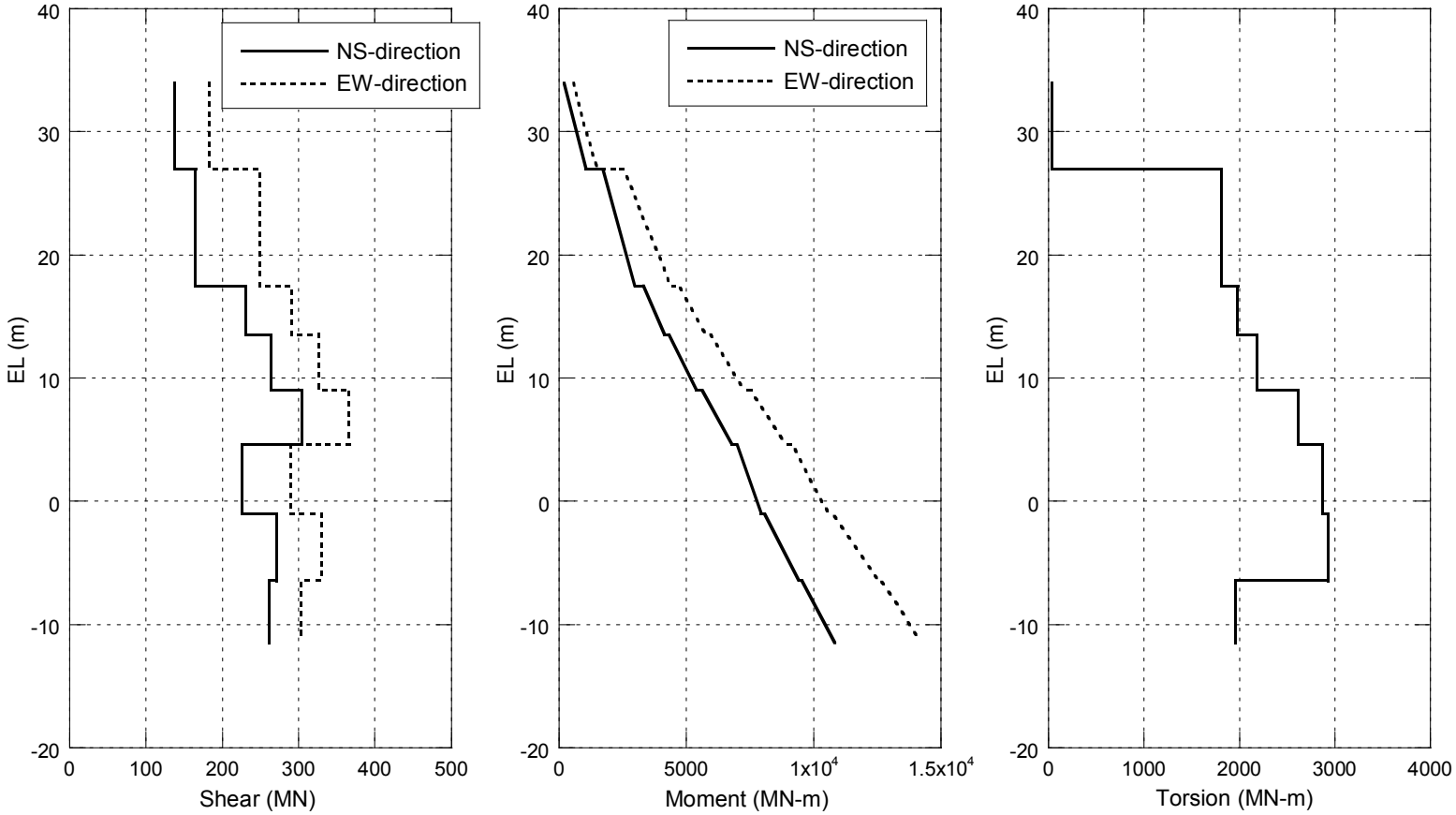

Figure 3G.1-25. Design Seismic Shears and Moments for RCCV

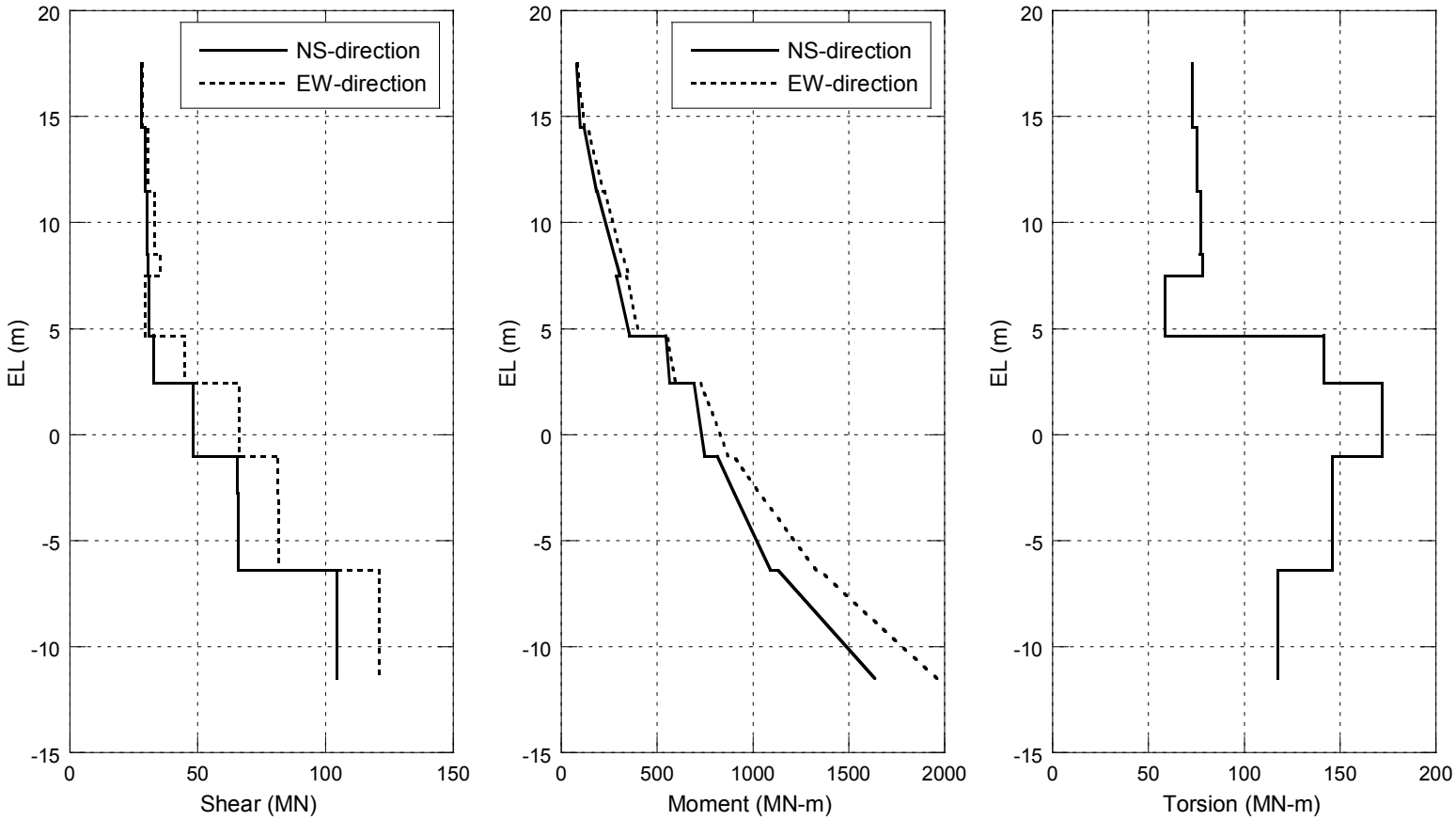

Figure 3G.1-26. Design Seismic Shears and Moments for RPV Pedestal and Vent Wall

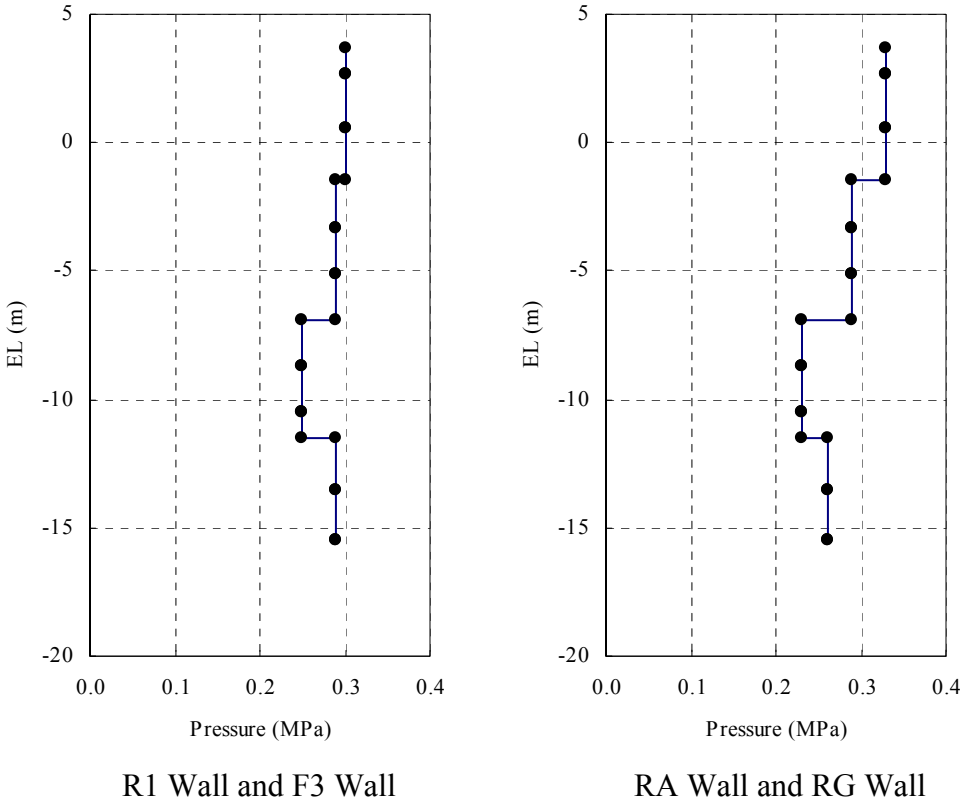

Figure 3G.1-27. Seismic Lateral Soil Pressure

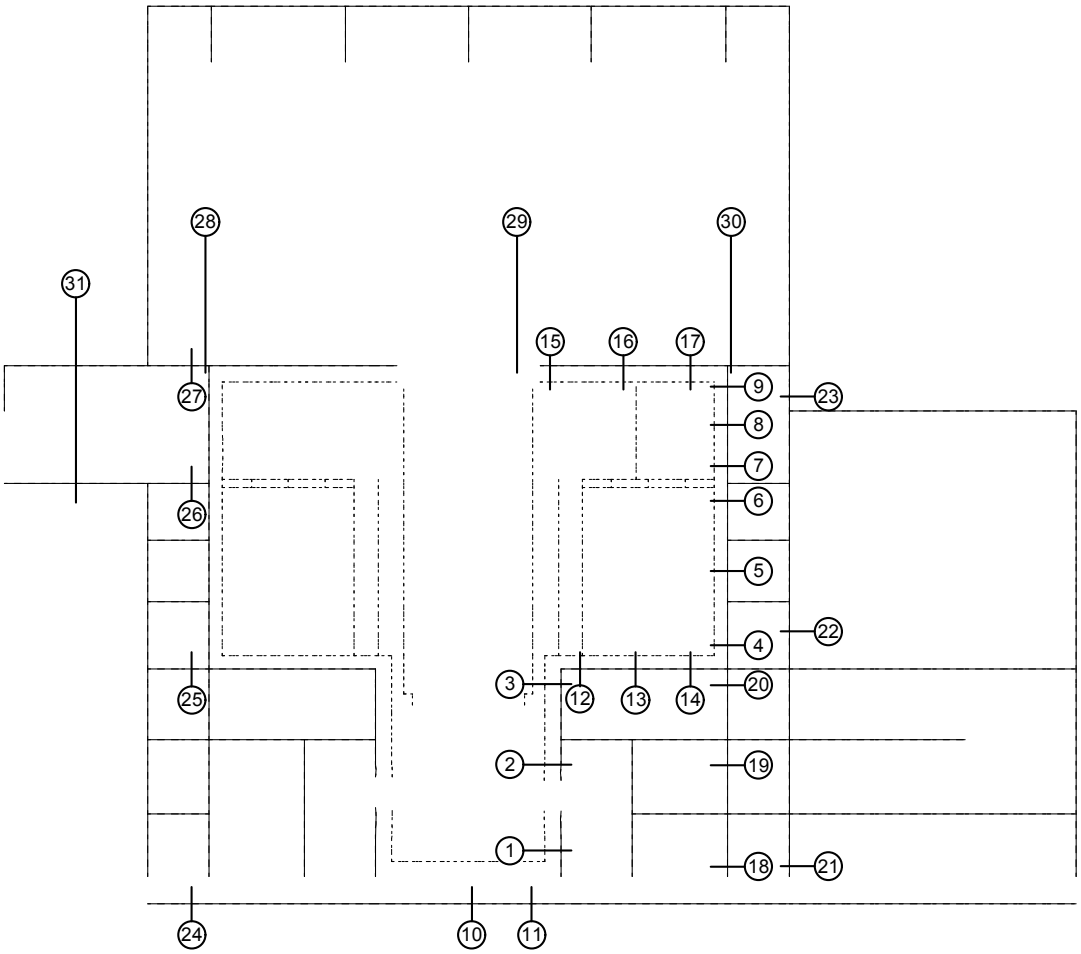

Figure 3G.1-28. Section Considered for Analysis

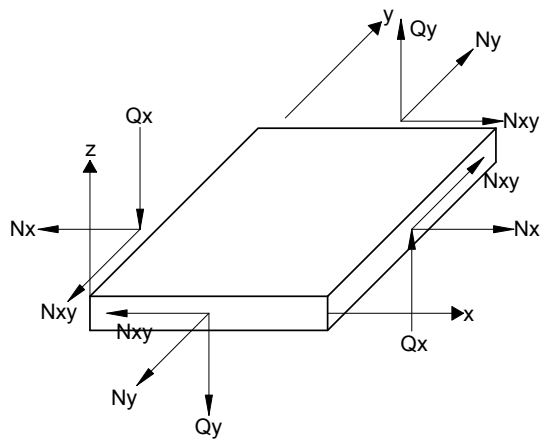

Membrane and Shear Forces

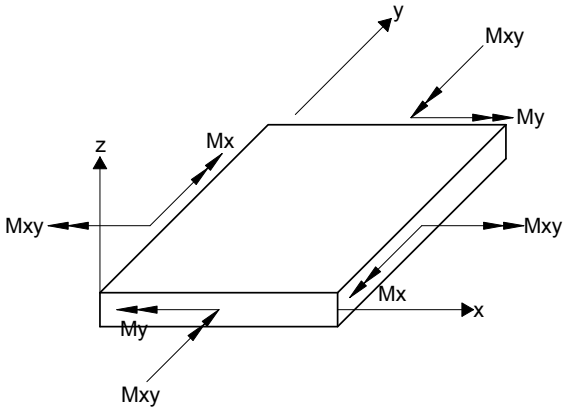

Moments

Definition of Element Coordinate System

Structure	x	y	z
RCCV Wall RPV Pedestal External Wall	horizontal	vertical	outward
Wall in N-S Direction	horizontal	vertical	toward West
Wall in E-W Direction	horizontal	vertical	toward South
Foundation Mat Floor Slab Top Slab	toward South	toward West	downward
Suppression Pool Slab	radial	circumferential	downward

Figure 3G.1-29. Force and Moment in Shell Element

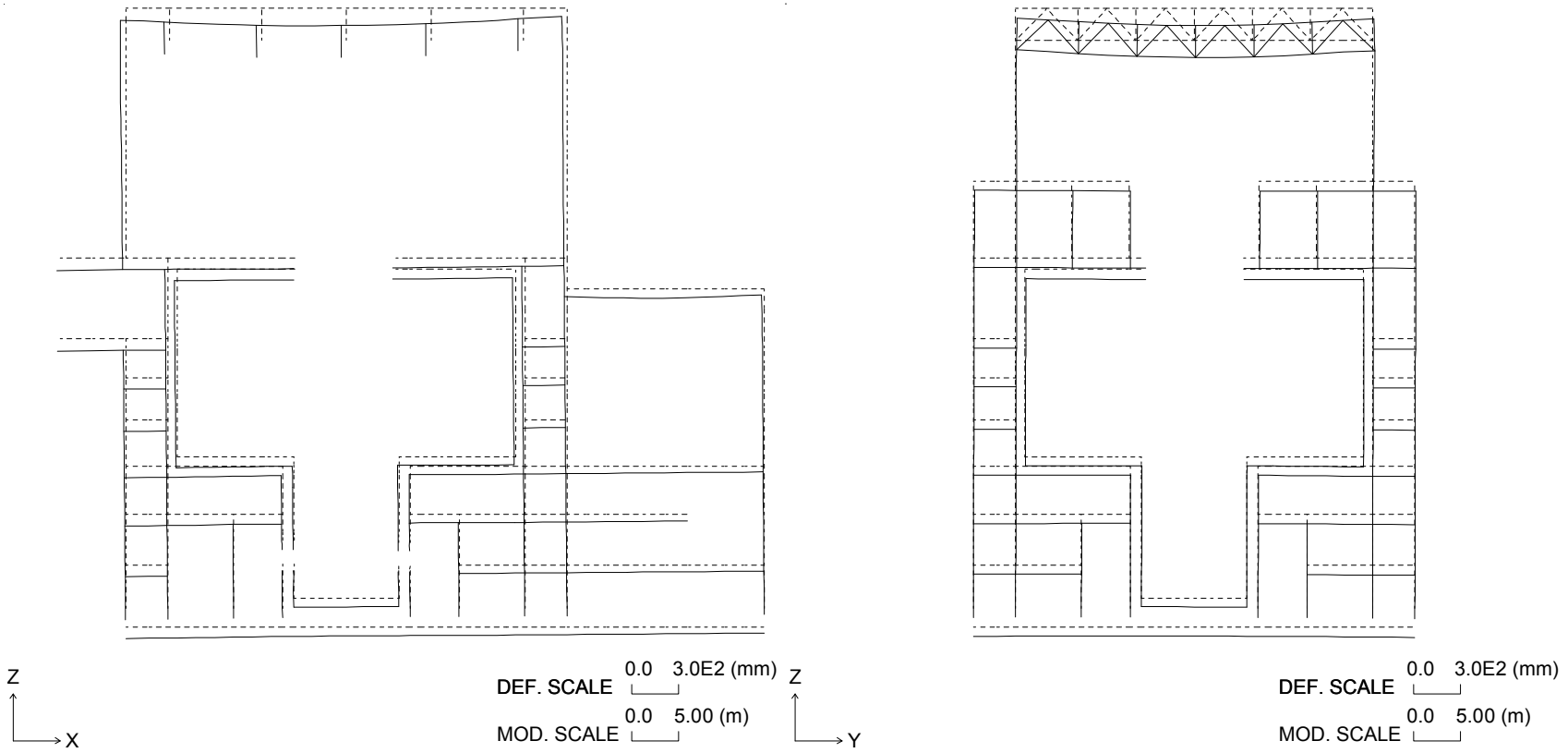

Figure 3G.1-30. Section Deformation for Dead Load

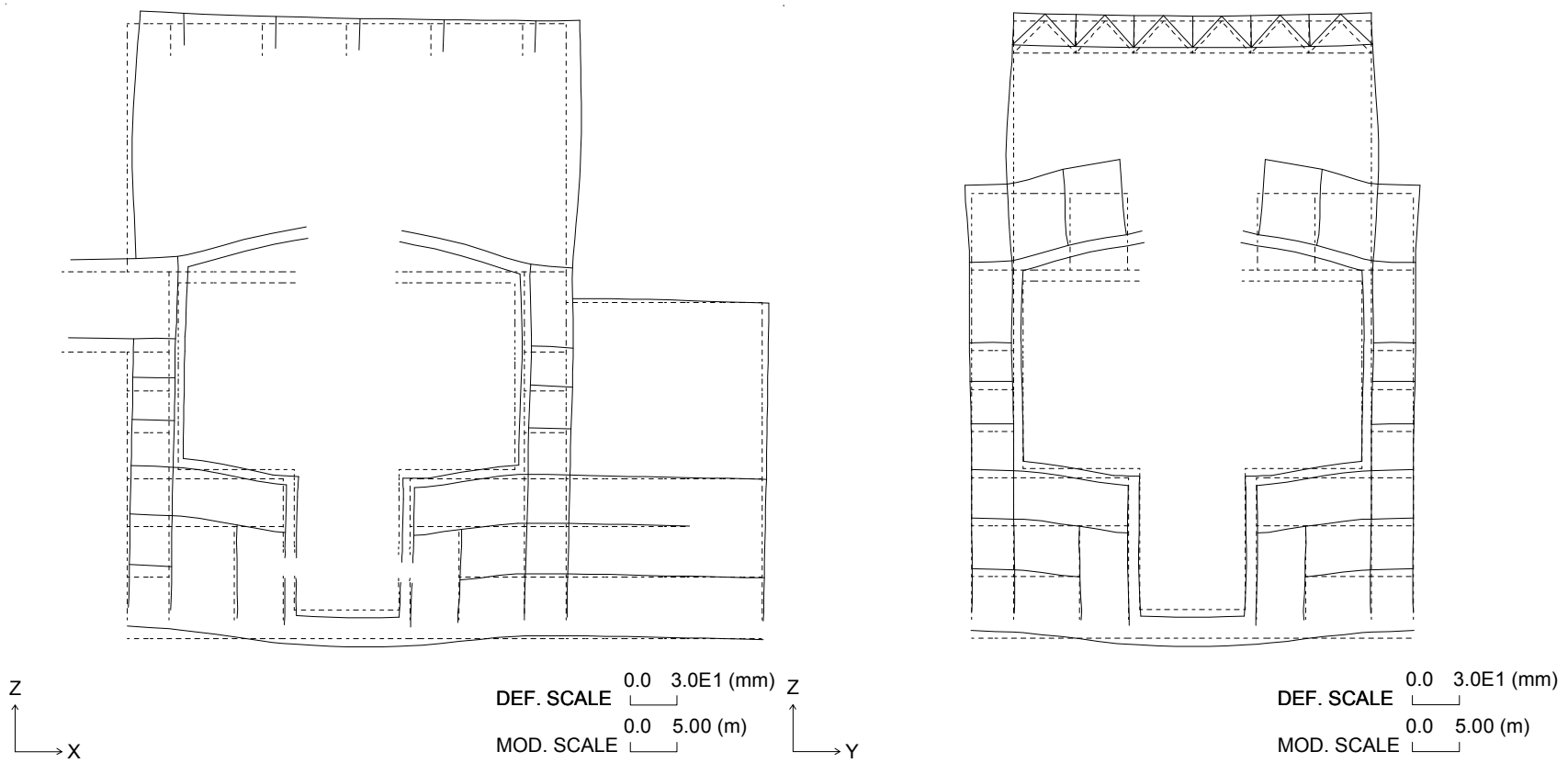

Figure 3G.1-31. Section Deformation for Drywell Unit Pressure (1 MPa)

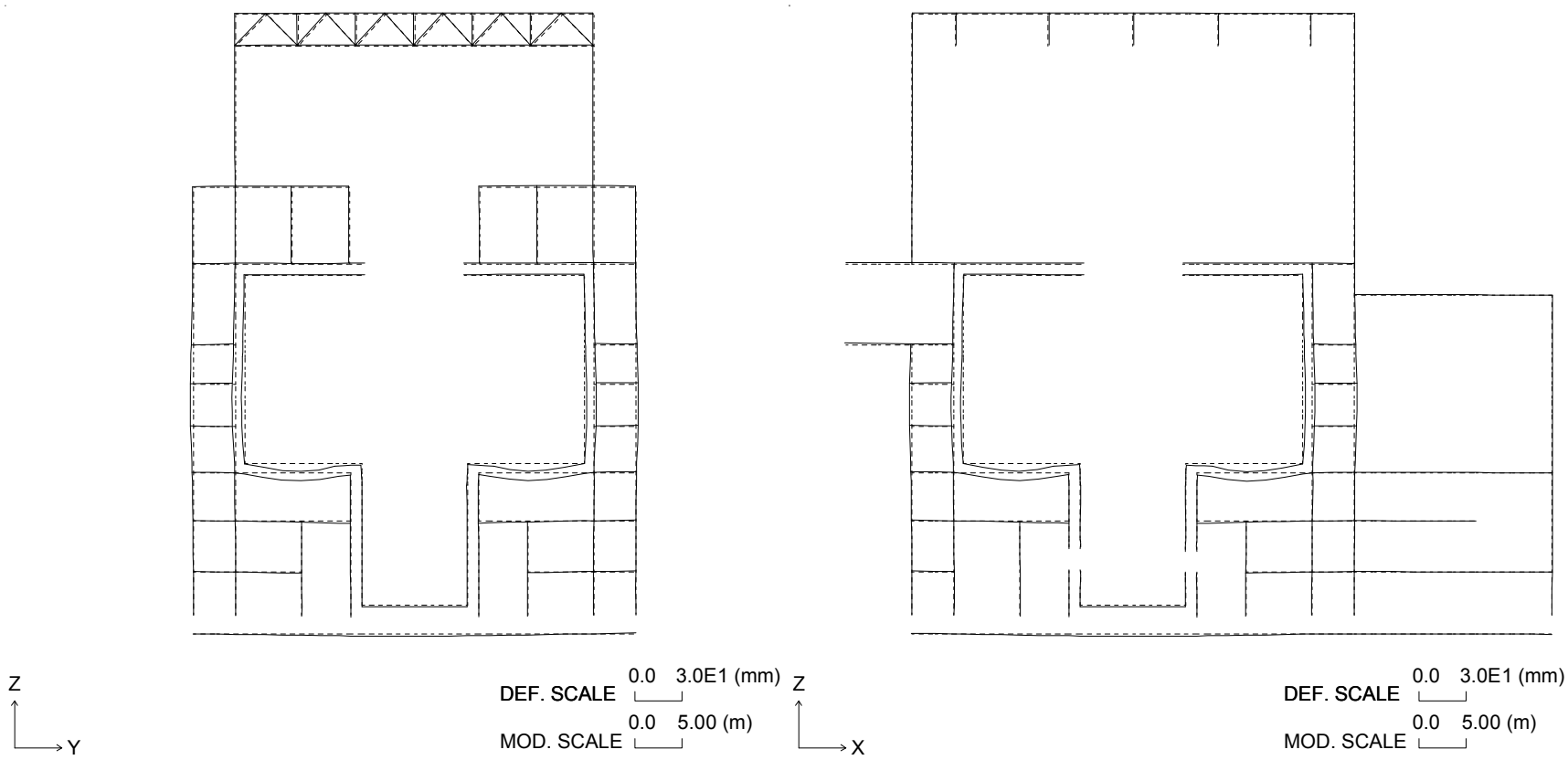

Figure 3G.1-32. Section Deformation for Wetwell Unit Pressure (1 MPa)

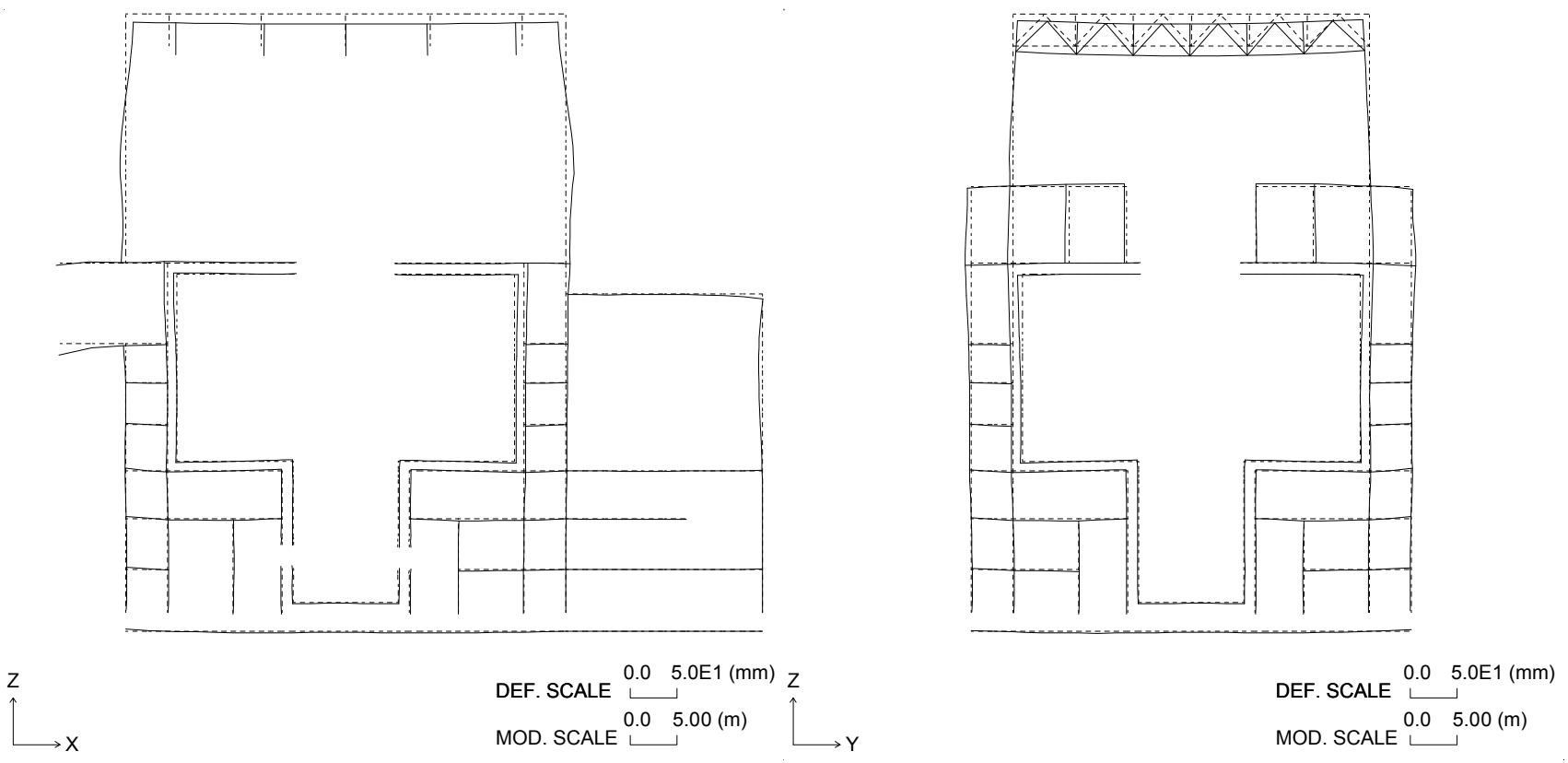

Figure 3G.1-33. Section Deformation for Thermal Load (Normal Operation: Winter)

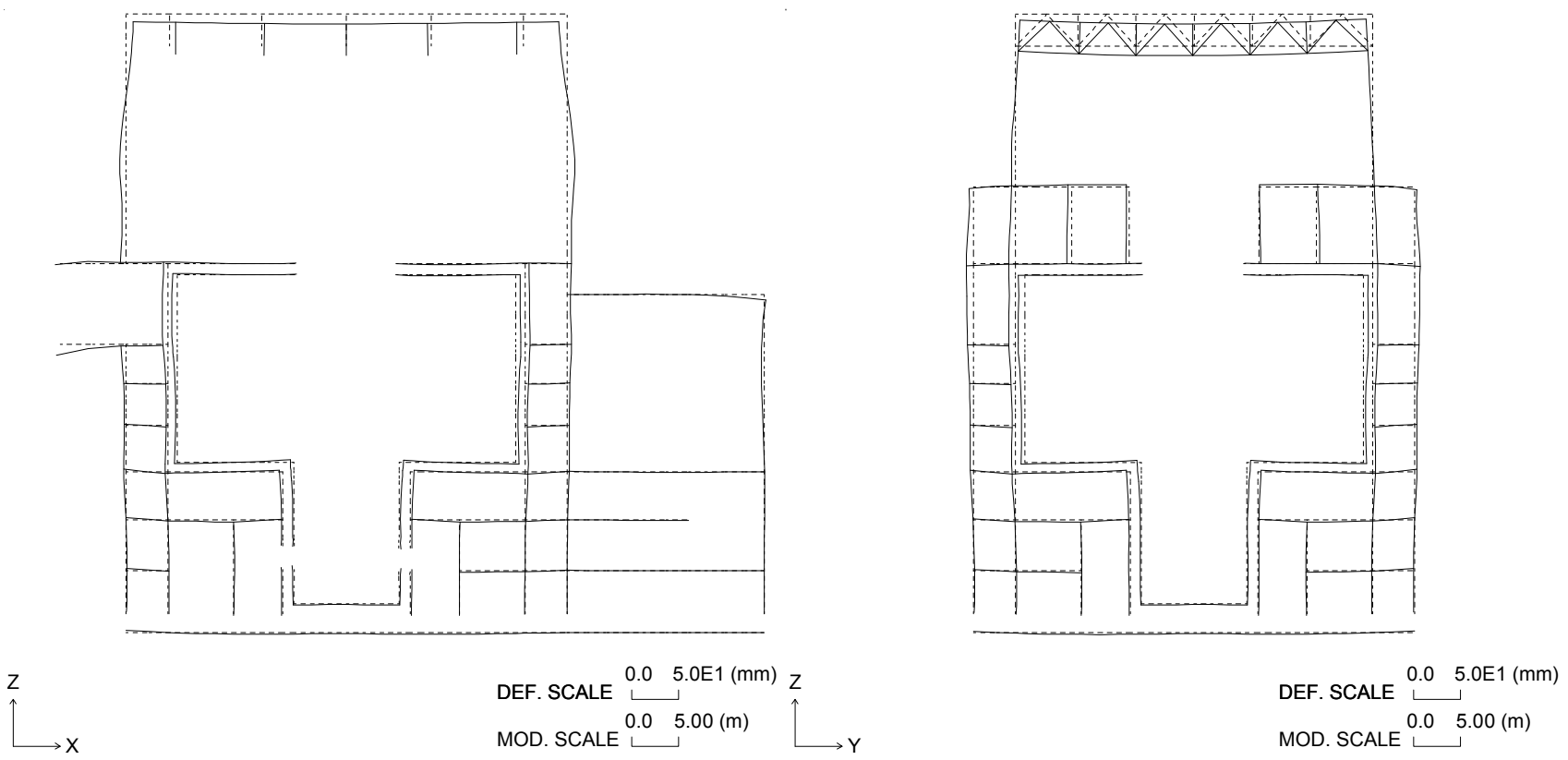

Figure 3G.1-34. Section Deformation for Thermal Load (LOCA After 6 min.: Winter)

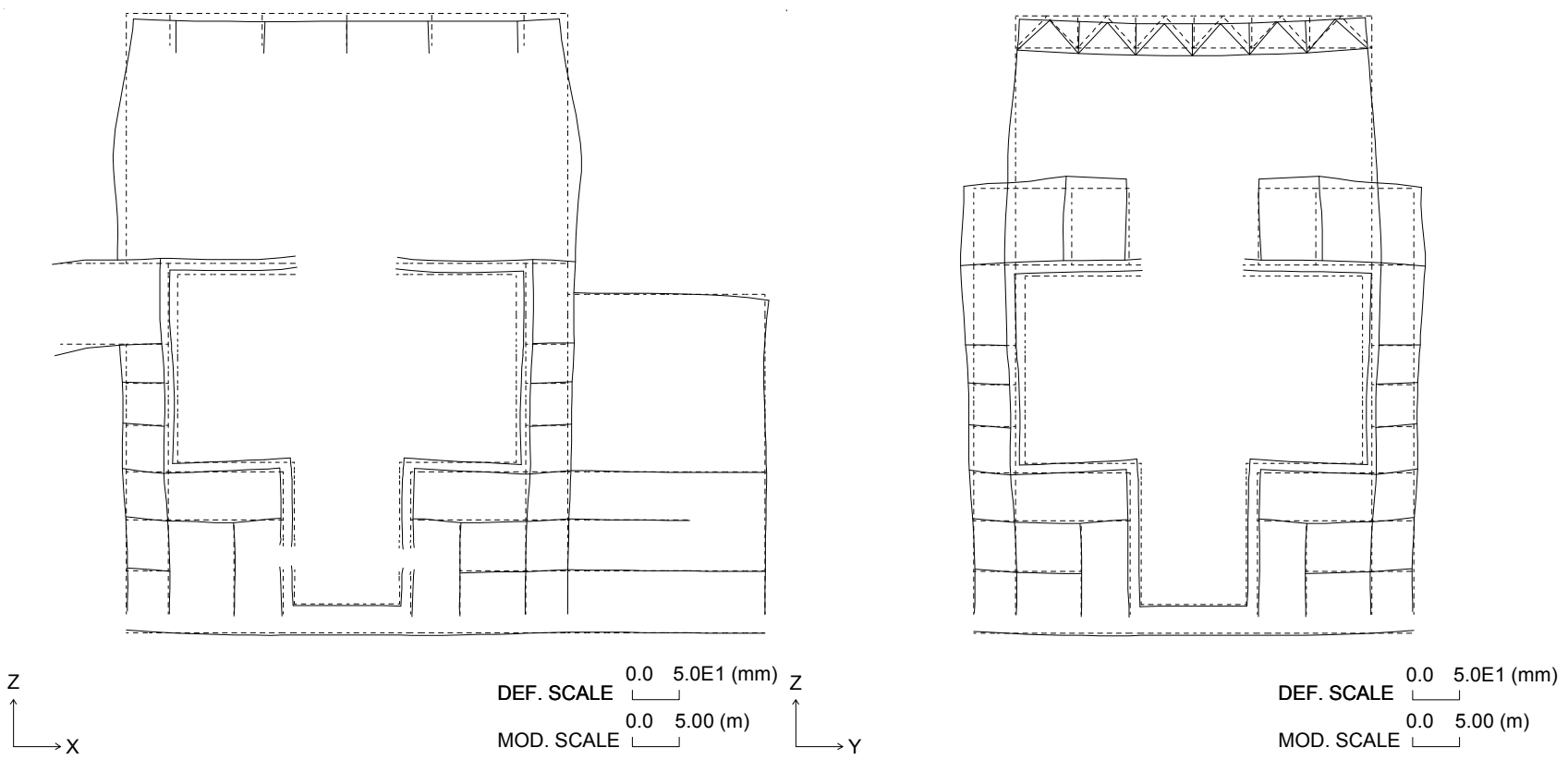

Figure 3G.1-35. Section Deformation for Thermal Load (LOCA After 72 hr.: Winter)

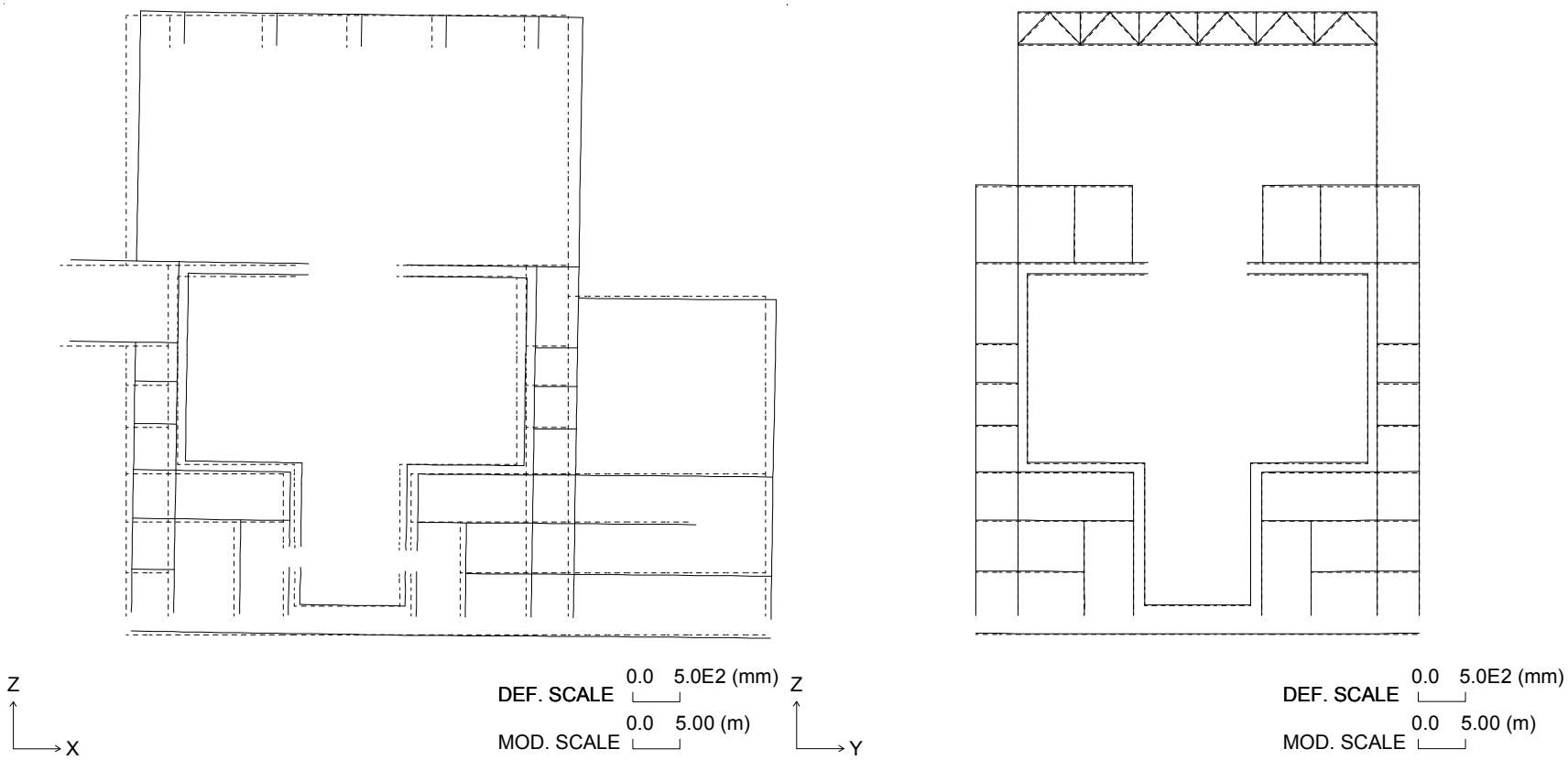

Figure 3G.1-36. Section Deformation for Seismic Load (Horizontal: North to South)

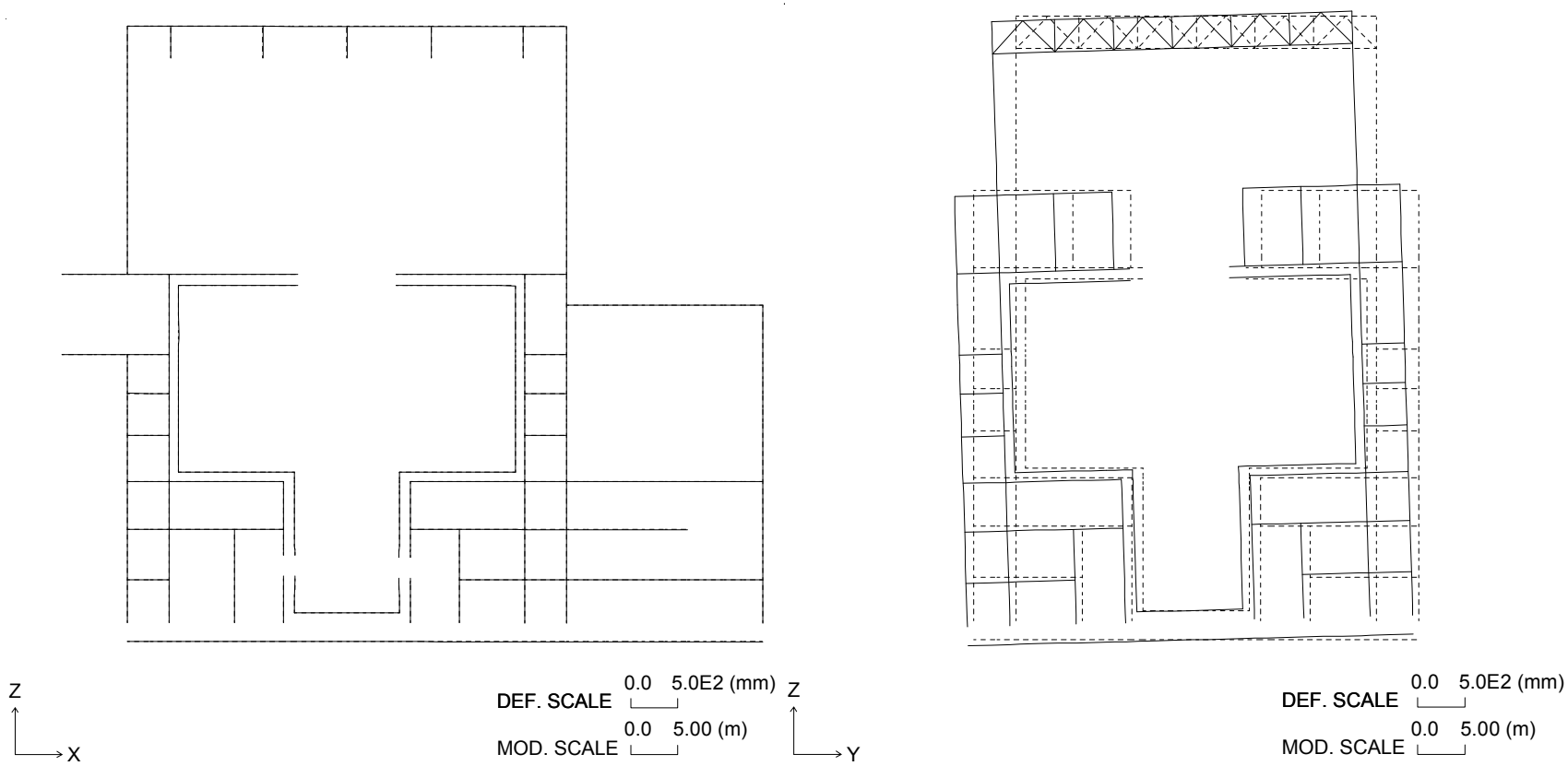

Figure 3G.1-37. Section Deformation for Seismic Load (Horizontal: East to West)

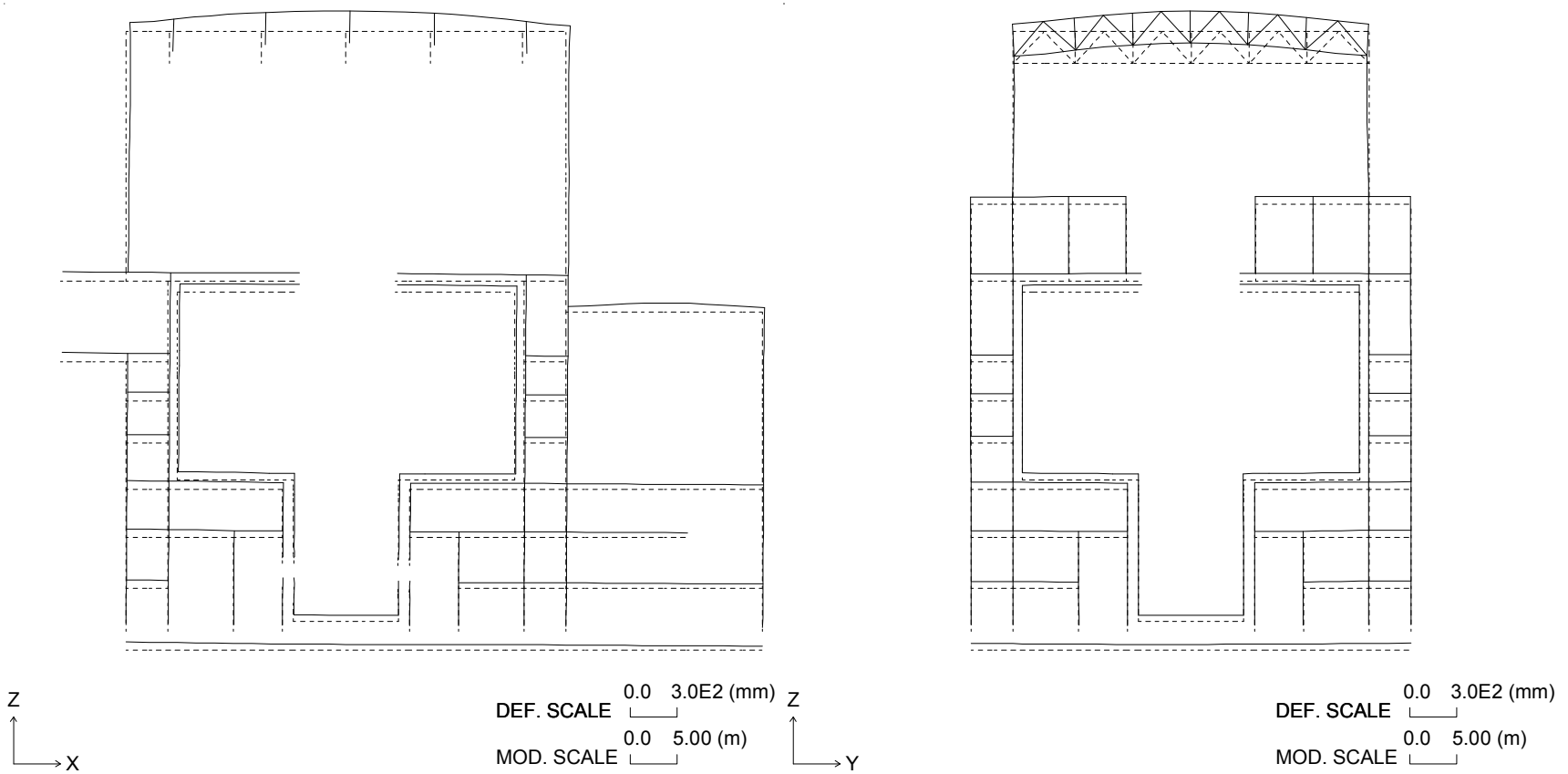

Figure 3G.1-38. Section Deformation for Seismic Load (Vertical: Upward)

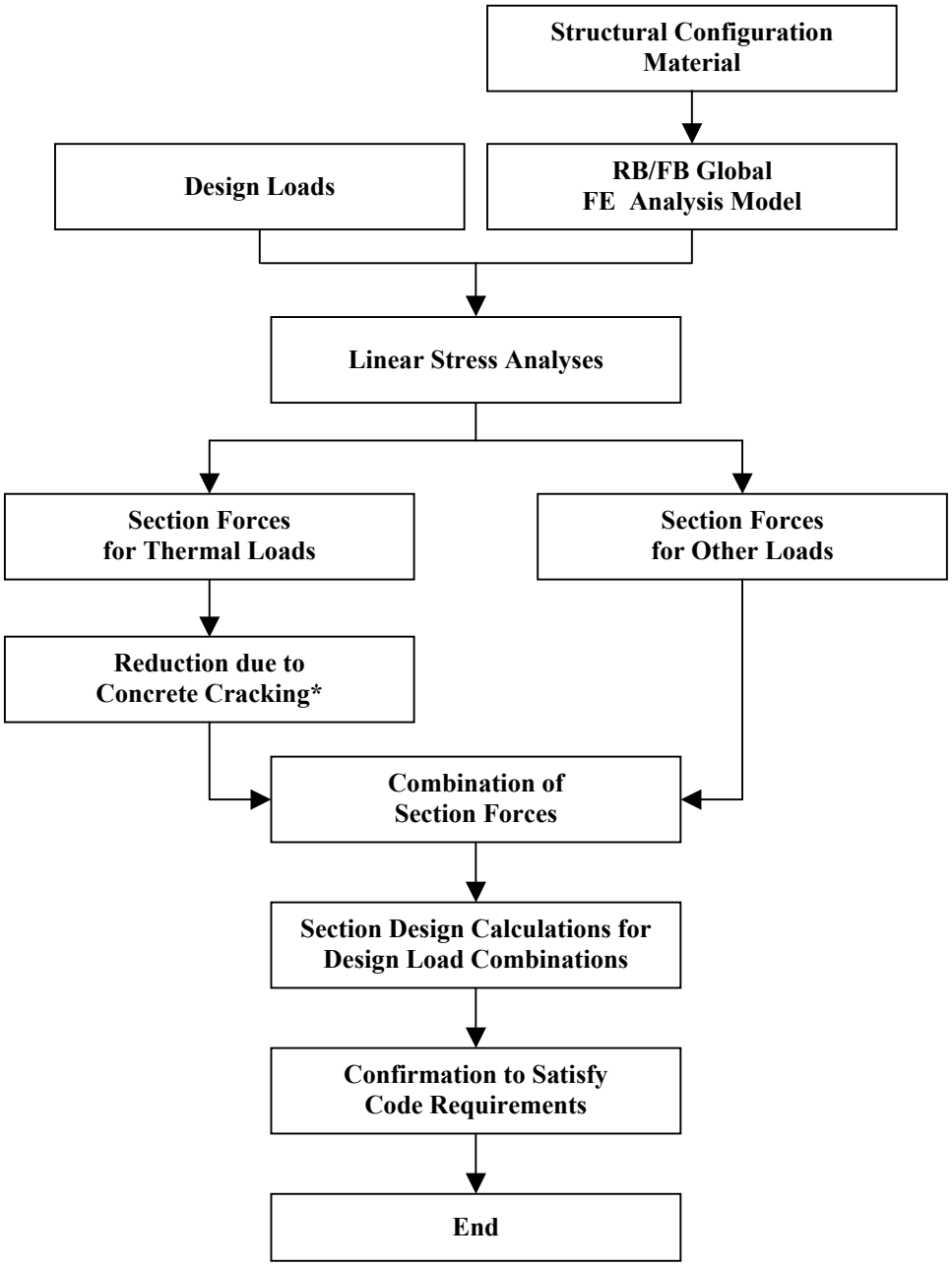

*: Thermal section forces are reduced using the section design calculation program, SSDP-2D, with thermal cracking option selected.
However, for the LOCA thermal loads, "thermal ratios" obtained by 3D nonlinear analyses are multiplied to the section forces obtained by linear stress analyses.
The section forces from the non-linear analyses can also be used directly.
Thermal cracking option of SSDP-2D is not used together with 3D non-linear analyses.
(Refer to Subsections 3.8.1.4.1.2 and 3.8.1.4.1.3.)

Figure 3G.1-39. Flow Chart for Structural Analysis and Design

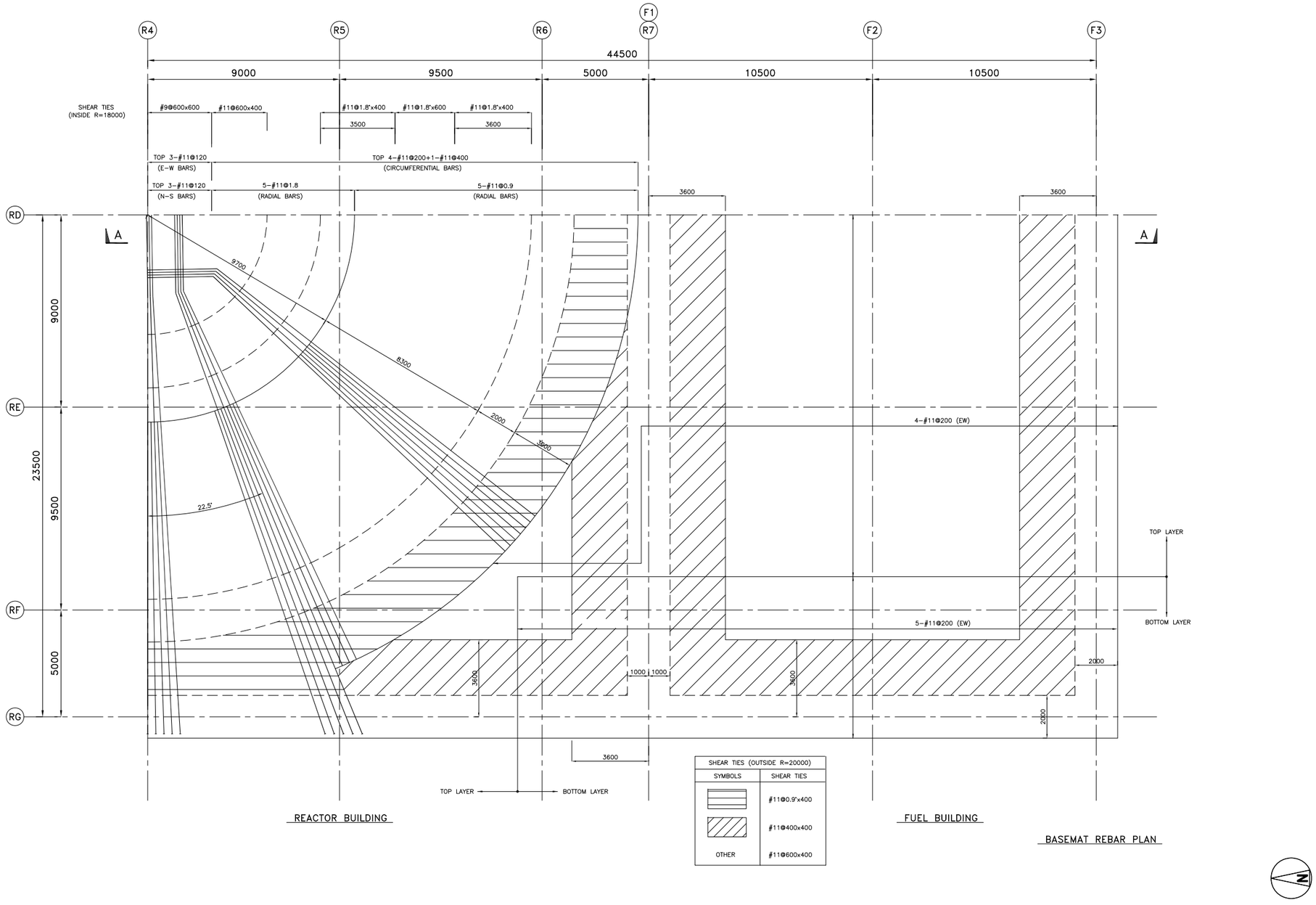

Figure 3G.1-40. Reinforcing Steel of Foundation Mat: Plan

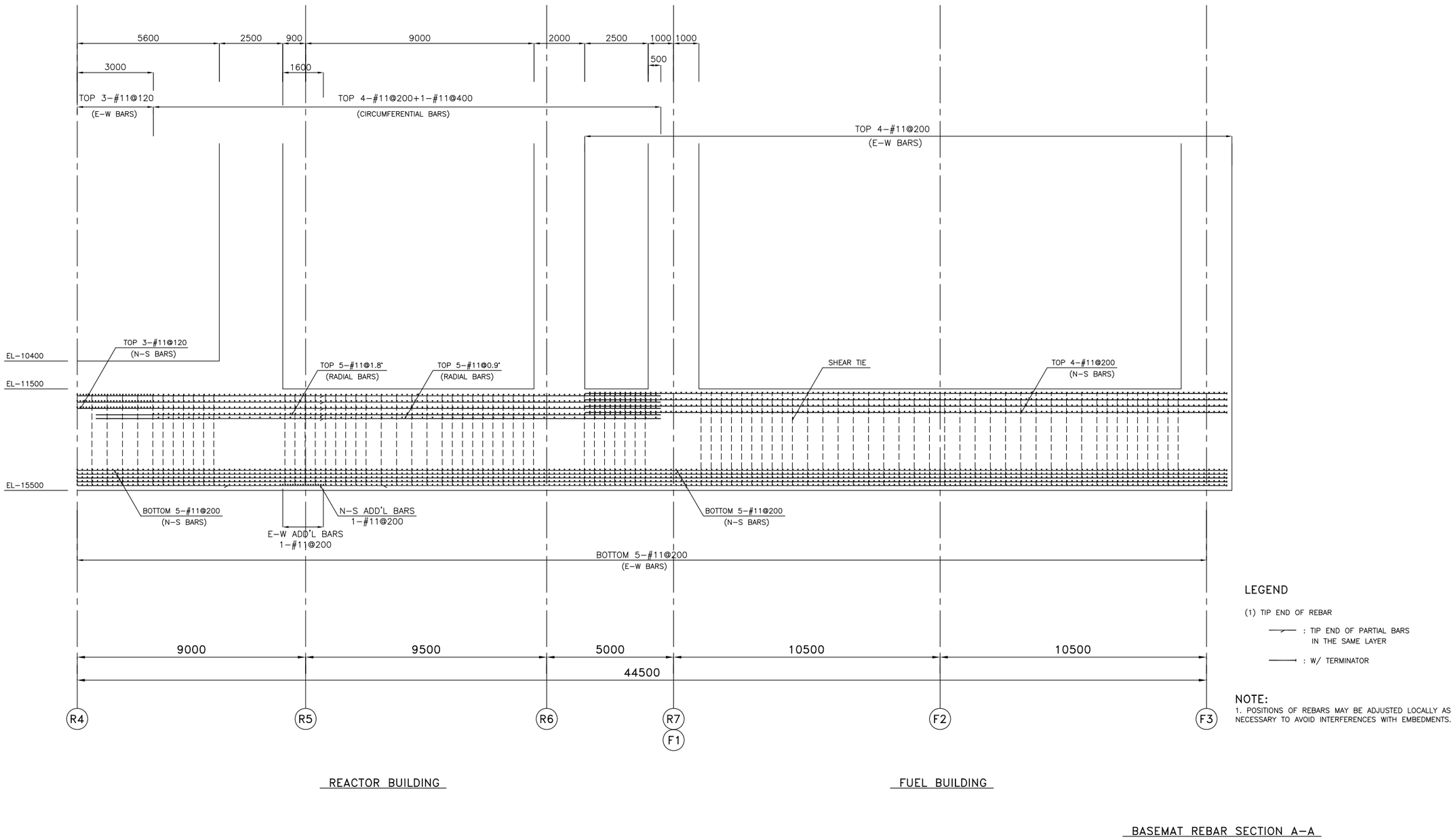

Figure 3G.1-41. Reinforcing Steel of Foundation Mat: Section A-A

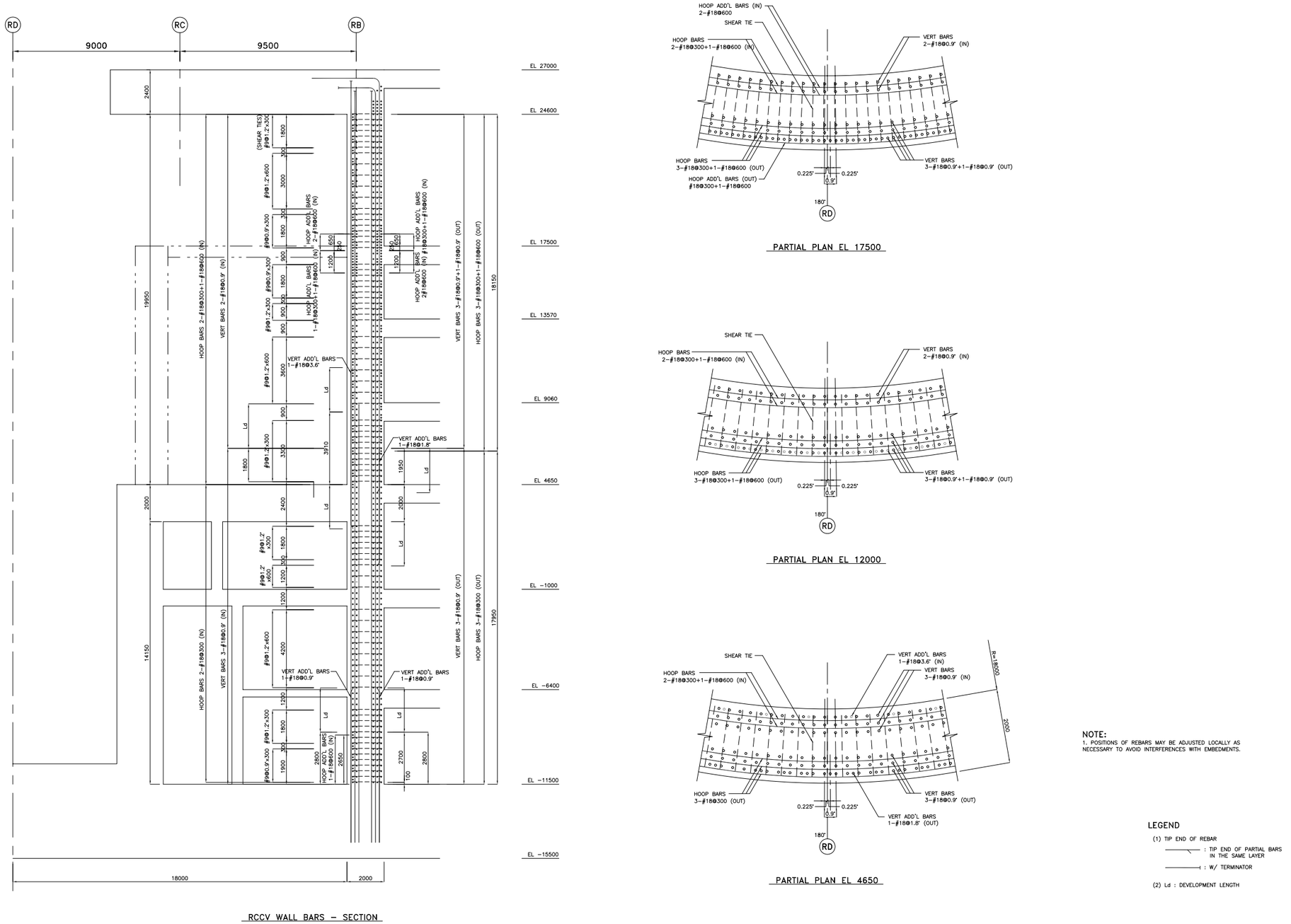

Figure 3G.1-42. Reinforcing Steel of RCCV Wall

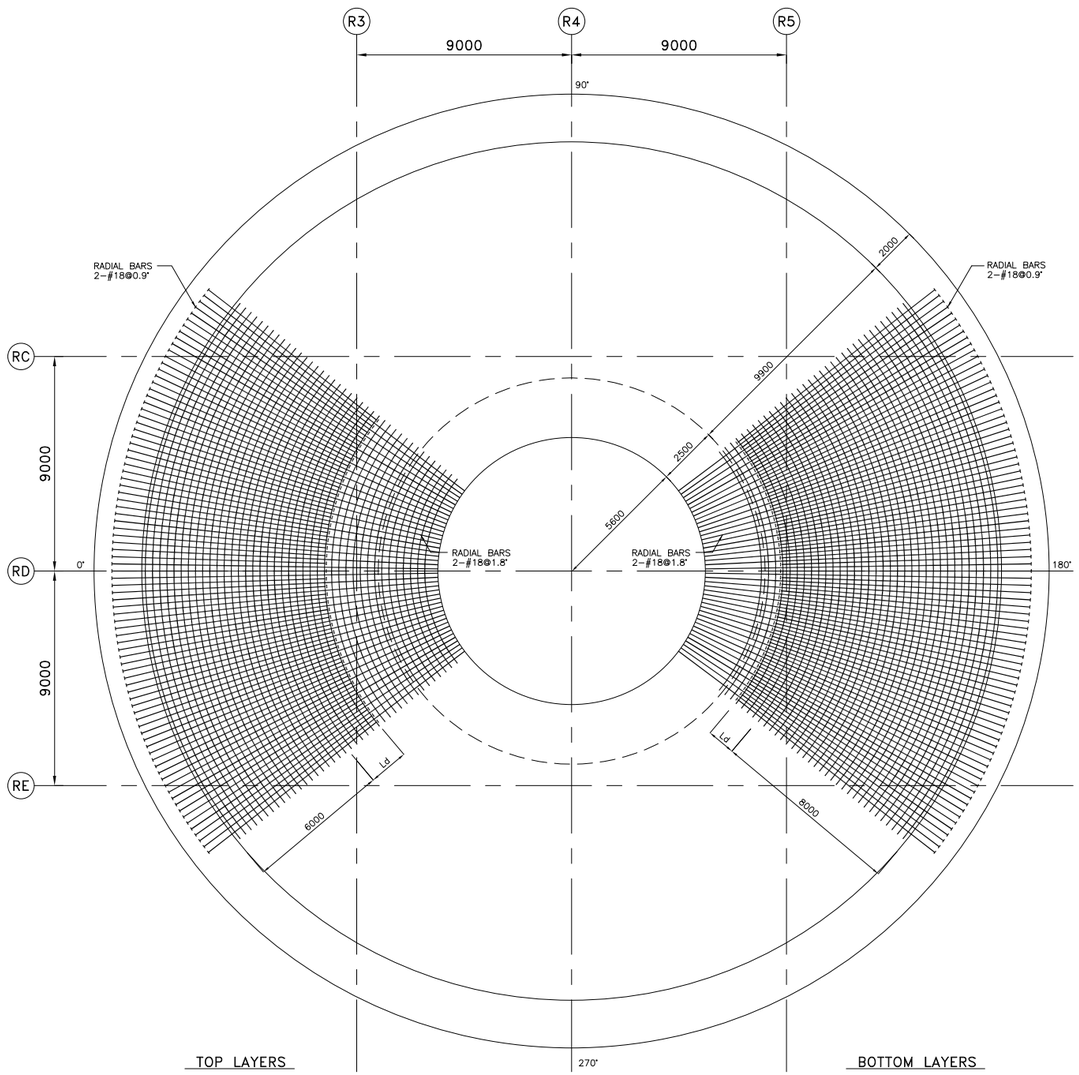

SUPPRESSION POOL SLAB – PLAN

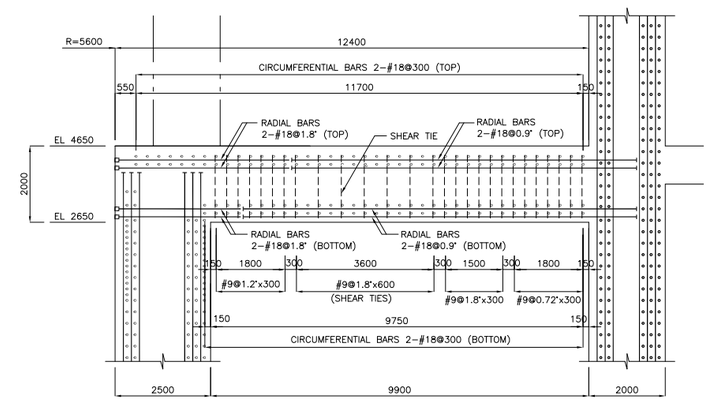

SUPPRESSION POOL SLAB – SECTION

LEGEND

(1) TIP END OF REBAR

——————┤ : W/ TERMINATOR

(2) Ld : DEVELOPMENT LENGTH

NOTE:
1. POSITIONS OF REBARS MAY BE ADJUSTED LOCALLY AS NECESSARY TO AVOID INTERFERENCES WITH EMBEDMENTS.

Figure 3G.1-43. Reinforcing Steel of Suppression Pool Slab

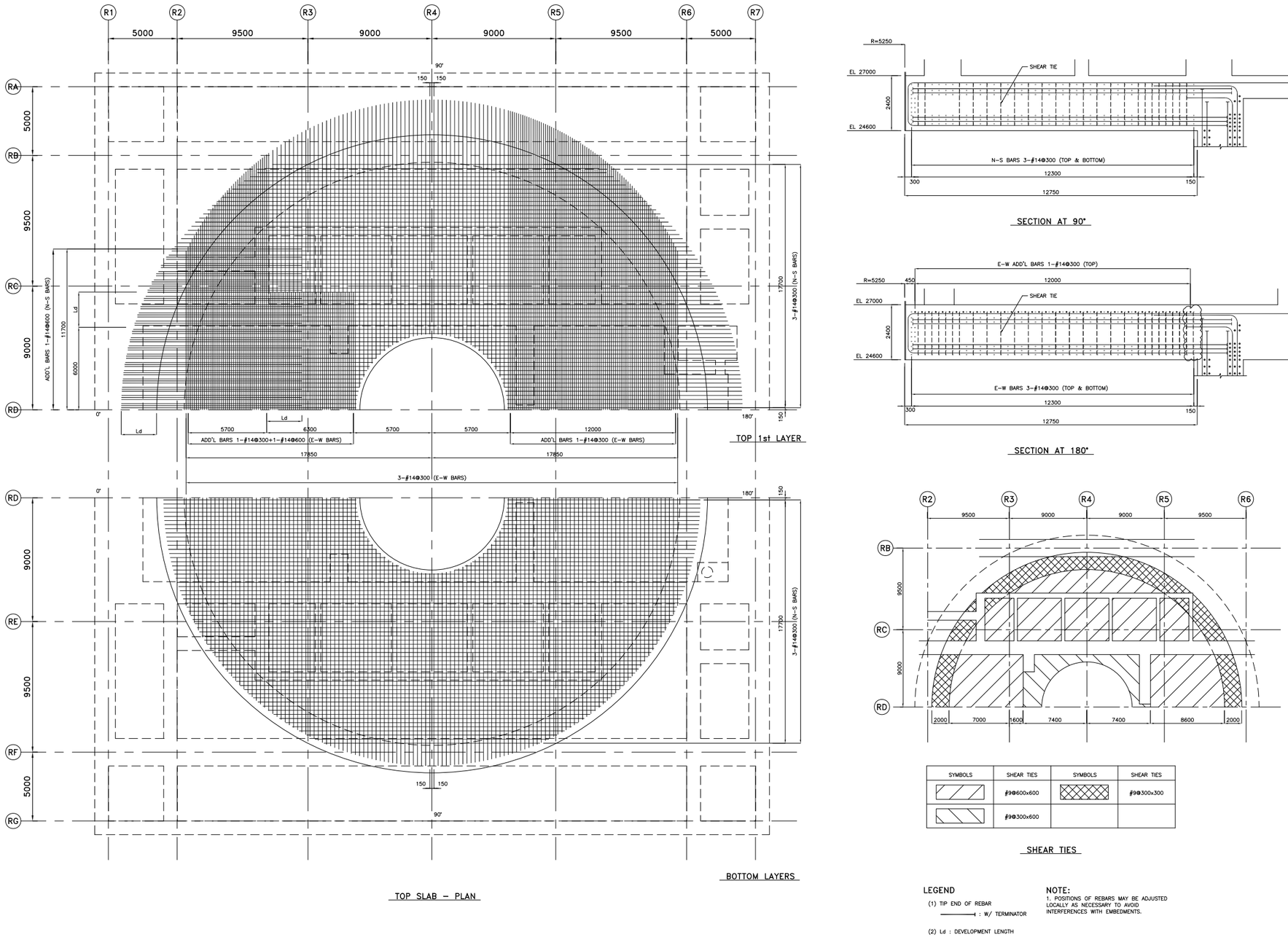

Figure 3G.1-44. Reinforcing Steel of Top Slab

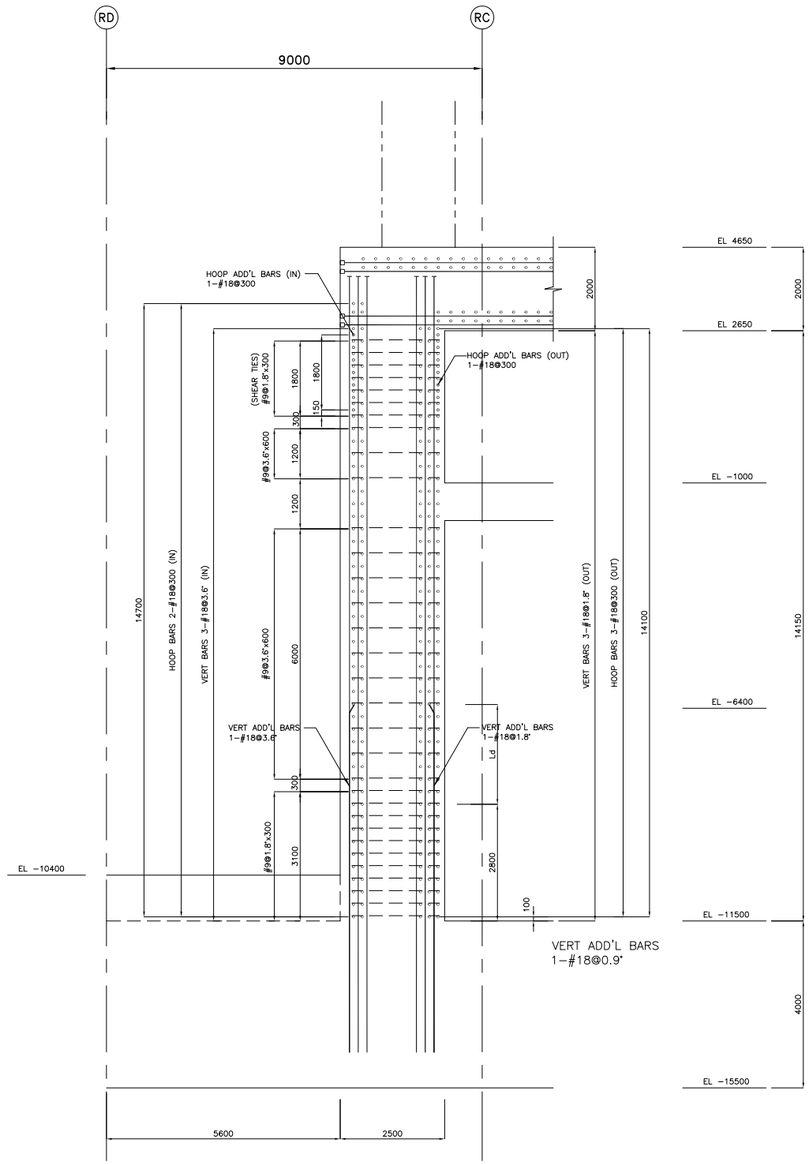

RPV PEDESTAL BARS – SECTION

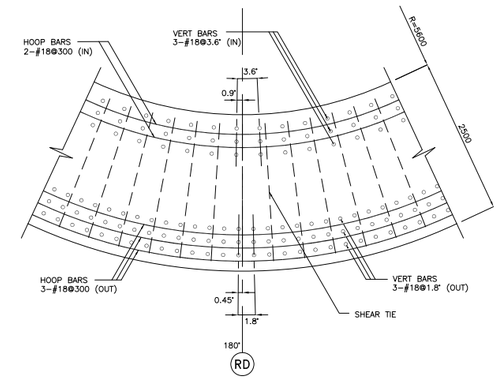

PARTIAL PLAN EL –1000

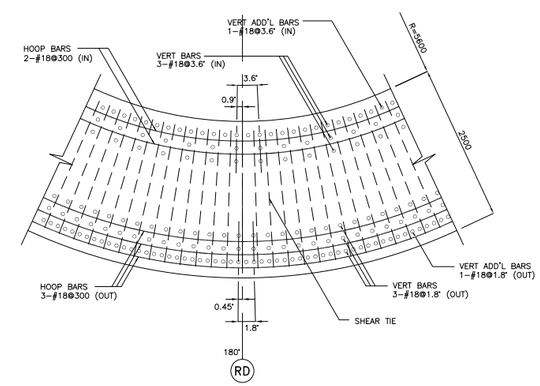

PARTIAL PLAN EL –11500

LEGEND

(1) TIP END OF REBAR

: W/ TERMINATOR

NOTE:

1. POSITIONS OF REBARS MAY BE ADJUSTED LOCALLY AS NECESSARY TO AVOID INTERFERENCES WITH EMBEDMENTS.

Figure 3G.1-45. Reinforcing Steel of RPV Pedestal

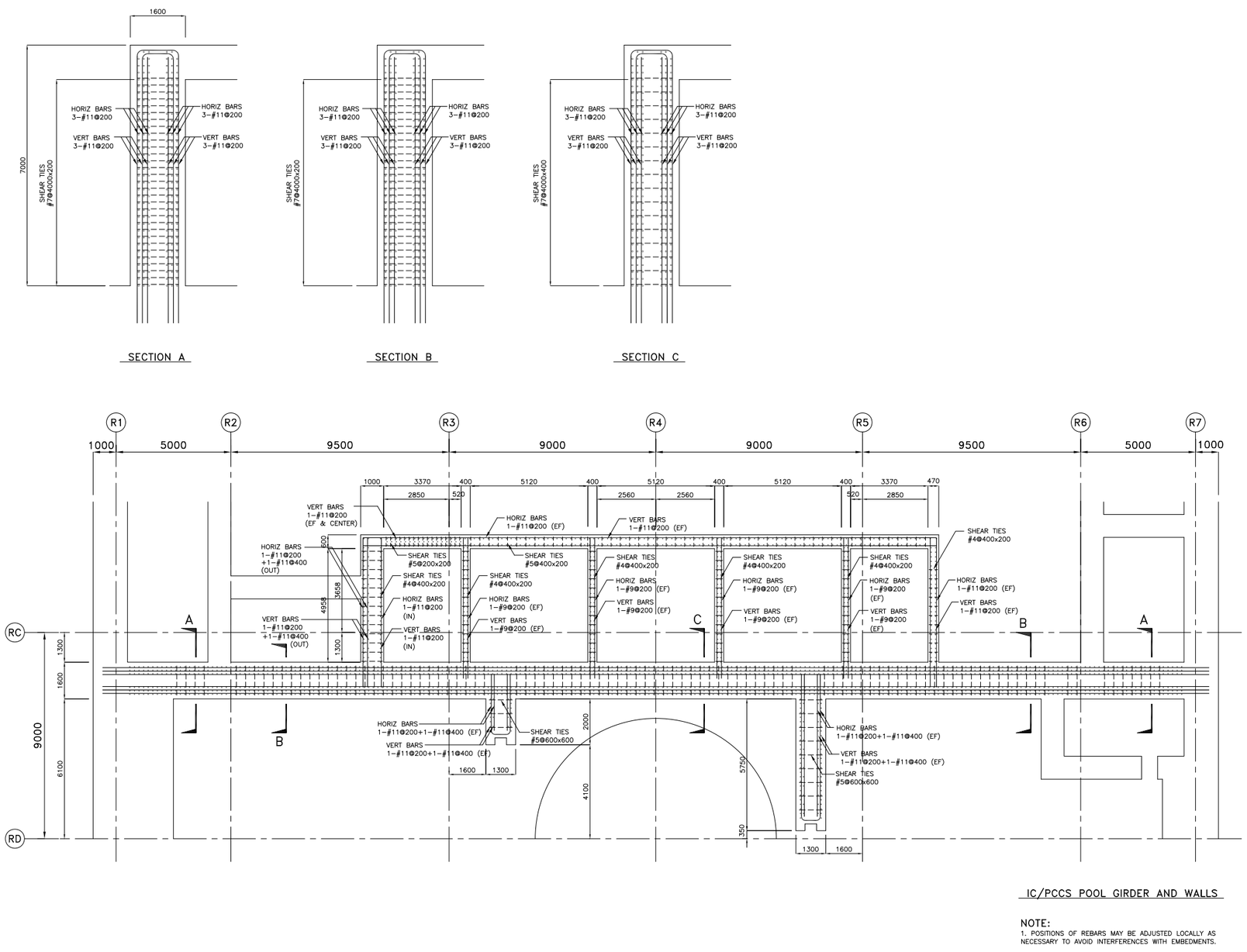

Figure 3G.1-46. Reinforcing Steel of IC/PCCS Pool Girder

RB SEISMIC WALLS REINFORCING SCHEDULE EL−11500 ~ EL34000				
EL 52700 ~ EL 34000	TYPE	OW1		
	SECTION	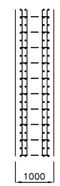		
	VERT BAR	2−#11 @200 (EF)		
	HORIZ BAR	2−#11 @200 (EF)		
	SHEAR TIE	#5 @400x400		
EL 34000 ~ EL 27000	TYPE	OW1	OW2	OW3
	SECTION	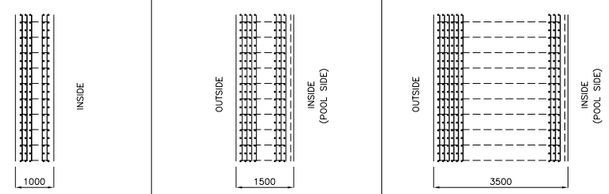		
	VERT BAR	3−#11@200 (OUT) 2−#11@200 (IN)	4−#11@200 (OUT) 3−#11@200 (IN)	6−#11@200 (OUT) 3−#11@200 (IN)
	HORIZ BAR	3−#11@200 (OUT) 2−#11@200 (IN)	4−#11@200 (OUT) 3−#11@200 (IN)	6−#11@200 (OUT) 3−#11@200 (IN)
	SHEAR TIE	#6 @400x400	#7 @400x200	#7 @400x200
EL 27000 ~ EL 4650	TYPE	OW1	OW2	OW3
	SECTION	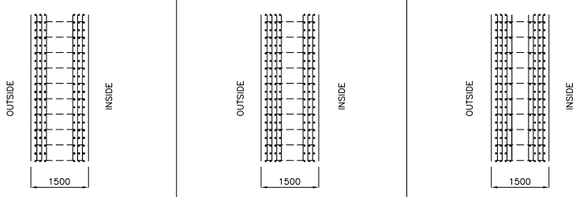		
	VERT BAR	3−#11 @200 (EF)	4−#11@200 (OUT) 3−#11@200 (IN)	4−#11 @200 (EF)
	HORIZ BAR	3−#11 @200 (EF)	4−#11@200 (OUT) 3−#11@200 (IN)	3−#11@200+1−#11@400 (EF)
	SHEAR TIE	#6 @400x400	#7 @400x400	#7 @400x200
EL 4650 ~ EL −11500	TYPE	OW1	OW2	OW3
	SECTION	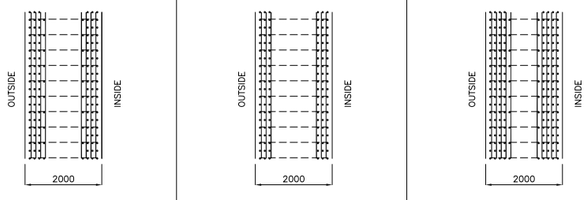		
	VERT BAR	4−#11 @200 (EF)	3−#11 @200 (EF)	5−#11 @200 (EF)
	HORIZ BAR	3−#11@200+1−#11@400 (EF)	3−#11 @200 (EF)	4−#11@200+1−#11@400 (EF)
	SHEAR TIE	#6 @400x400	#6 @400x400	#7 @400x200

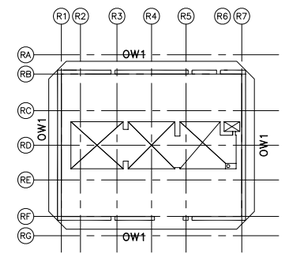

FLOOR EL 34000

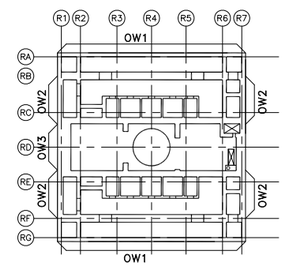

FLOOR EL 27000

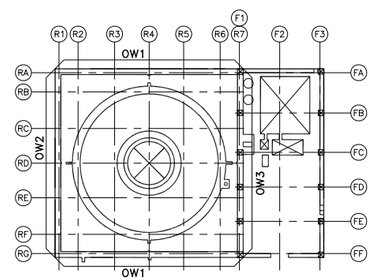

FLOOR EL 4650

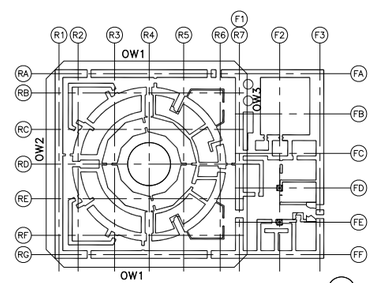

FLOOR EL −11500

KEY PLAN FOR WALL TYPE

MS TUNNEL WALL REINFORCING SCHEDULE		
EL 17500	TYPE	MW
	SECTION	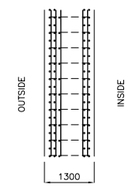
	VERT BAR	2−#11 @200(IN) 2−#11@200+1−#11@400(OUT)
	HORIZ BAR	2−#11 @200(IN) 2−#11@200+1−#11@400(OUT)
	SHEAR TIE	#6 @400x400

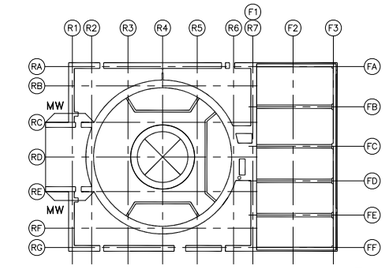

FLOOR EL 17500

KEY PLAN FOR MS WALL

SLAB REINFORCING SCHEDULE			
EL 27000	SECTION	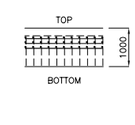	(MS TUNNEL ROOF) 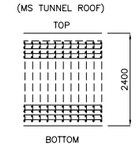
	TOP	3−#11 @200 (EW)	4−#11 @200 (EW)
	BOTTOM	PLATE t=25	4−#11 @200 (EW)
	SHEAR TIE	#5 @200x200	#5 @200x200
EL 17500	SECTION	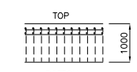	(MS TUNNEL SLAB) 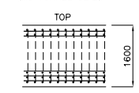
	TOP	2−#11 @200 (EW)	2−#11 @200 (EW)
	BOTTOM	PLATE t=16	3−#11 @200 (EW)
	SHEAR TIE	#5 @200x200	#5 @200x200
EL 4650	SECTION	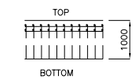	
	TOP	2−#11 @200 (EW)	
	BOTTOM	PLATE t=16	
	SHEAR TIE	#5 @200x200	

Figure 3G.1-47. List of RB Wall and Slab Reinforcement

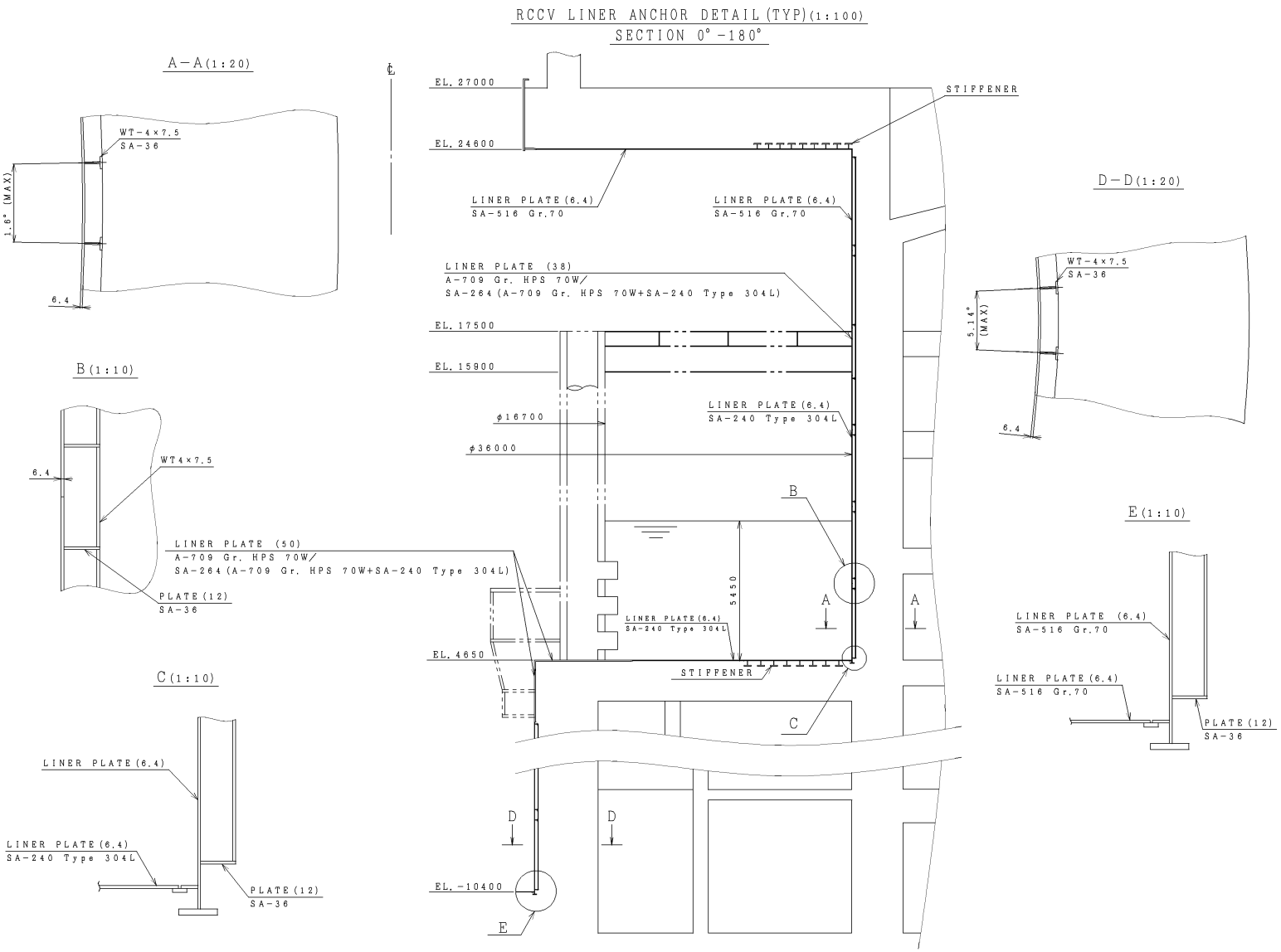

Figure 3G.1-48. Liner Anchor

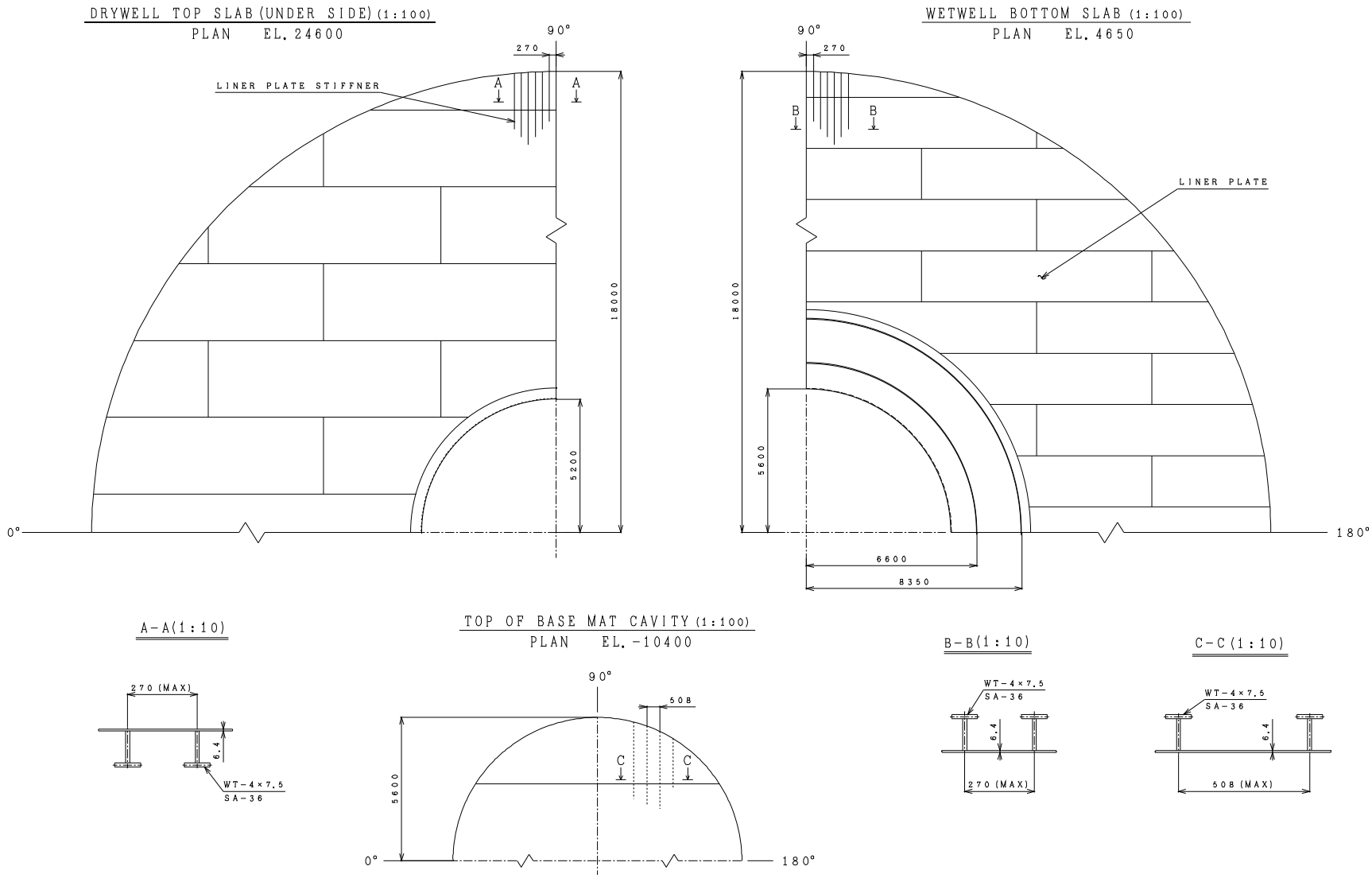

Figure 3G.1-49. Liner Plate Plans

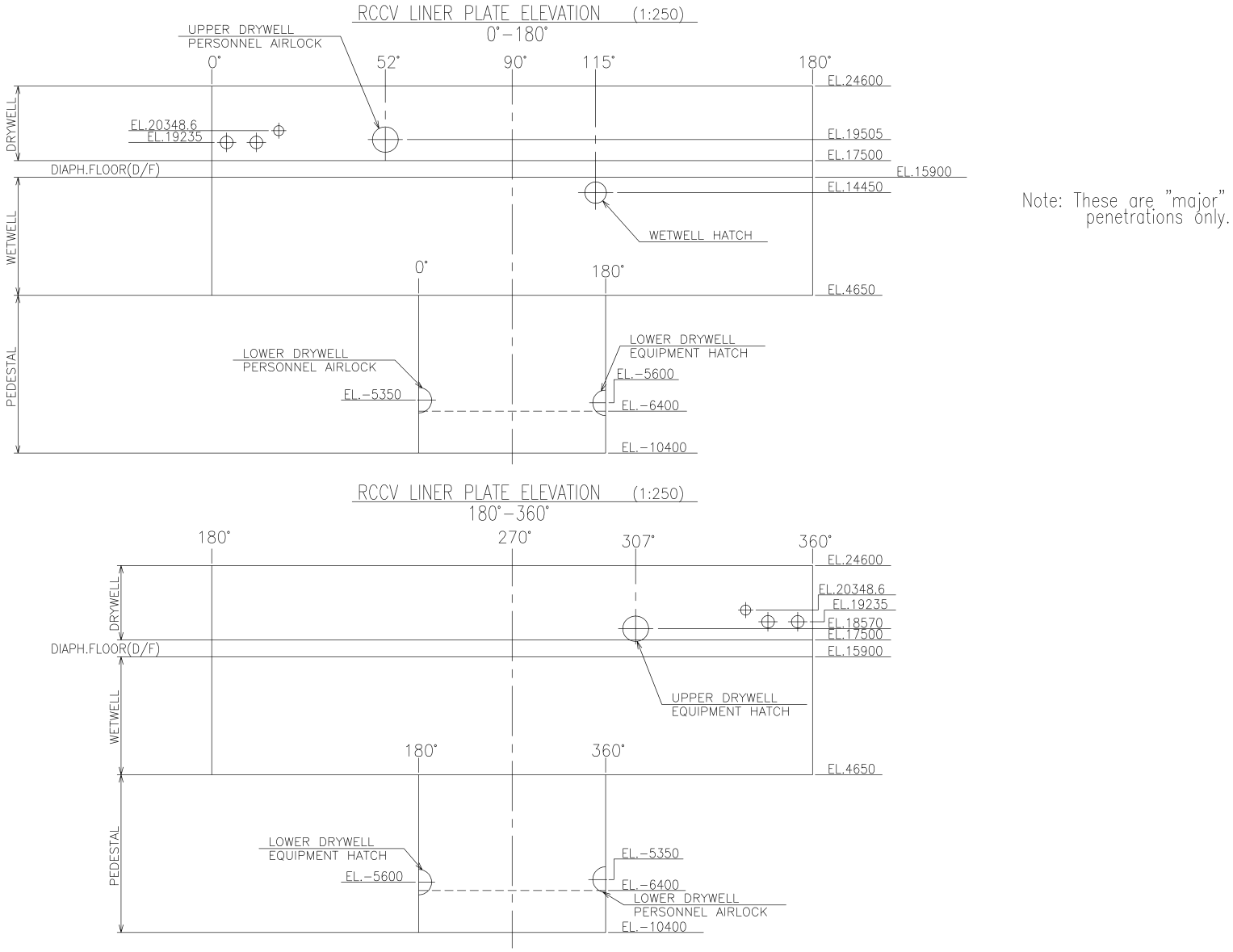

Note: These are "major" penetrations only.

Figure 3G.1-50. Liner Plate Development Elevation

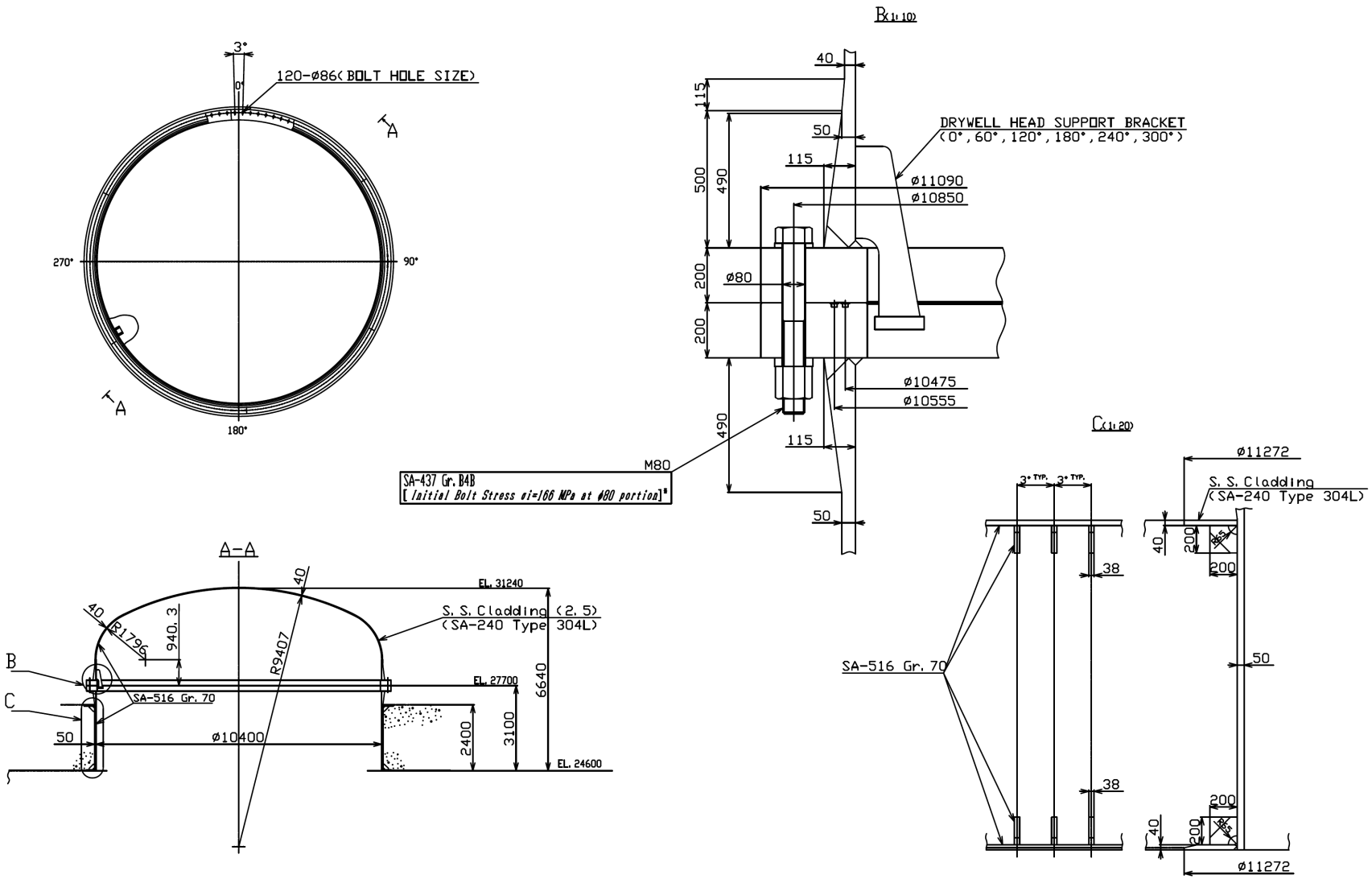

Figure 3G.1-51. Drywell Head

Figure 3G.1-52. Equipment Hatch

Figure 3G.1-53. Wetwell Hatch

Figure 3G.1-54. Personnel Airlock

{{{Security-Related Information - Withheld Under 10 CFR 2.390}}}

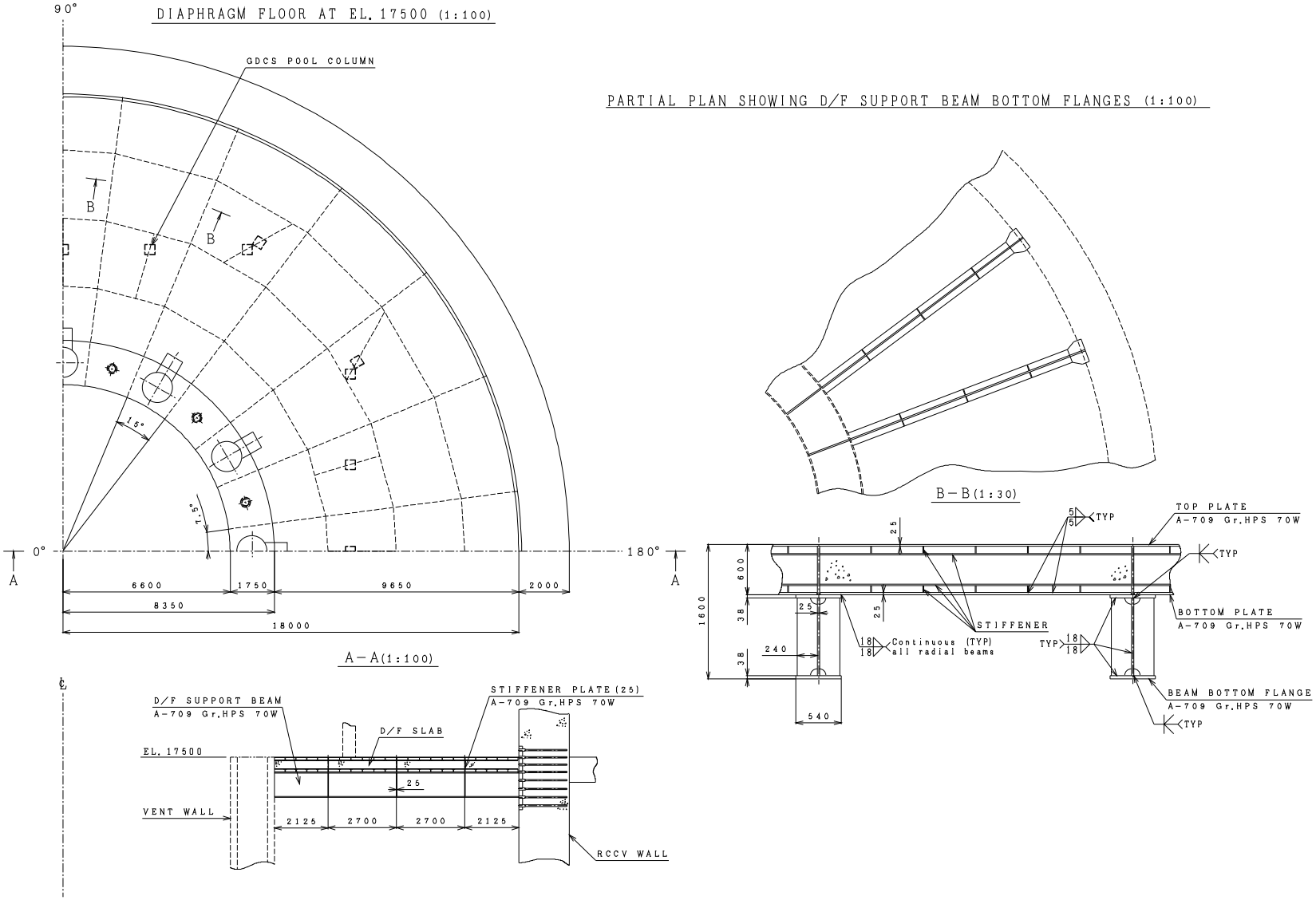

Figure 3G.1-55. Diaphragm Floor

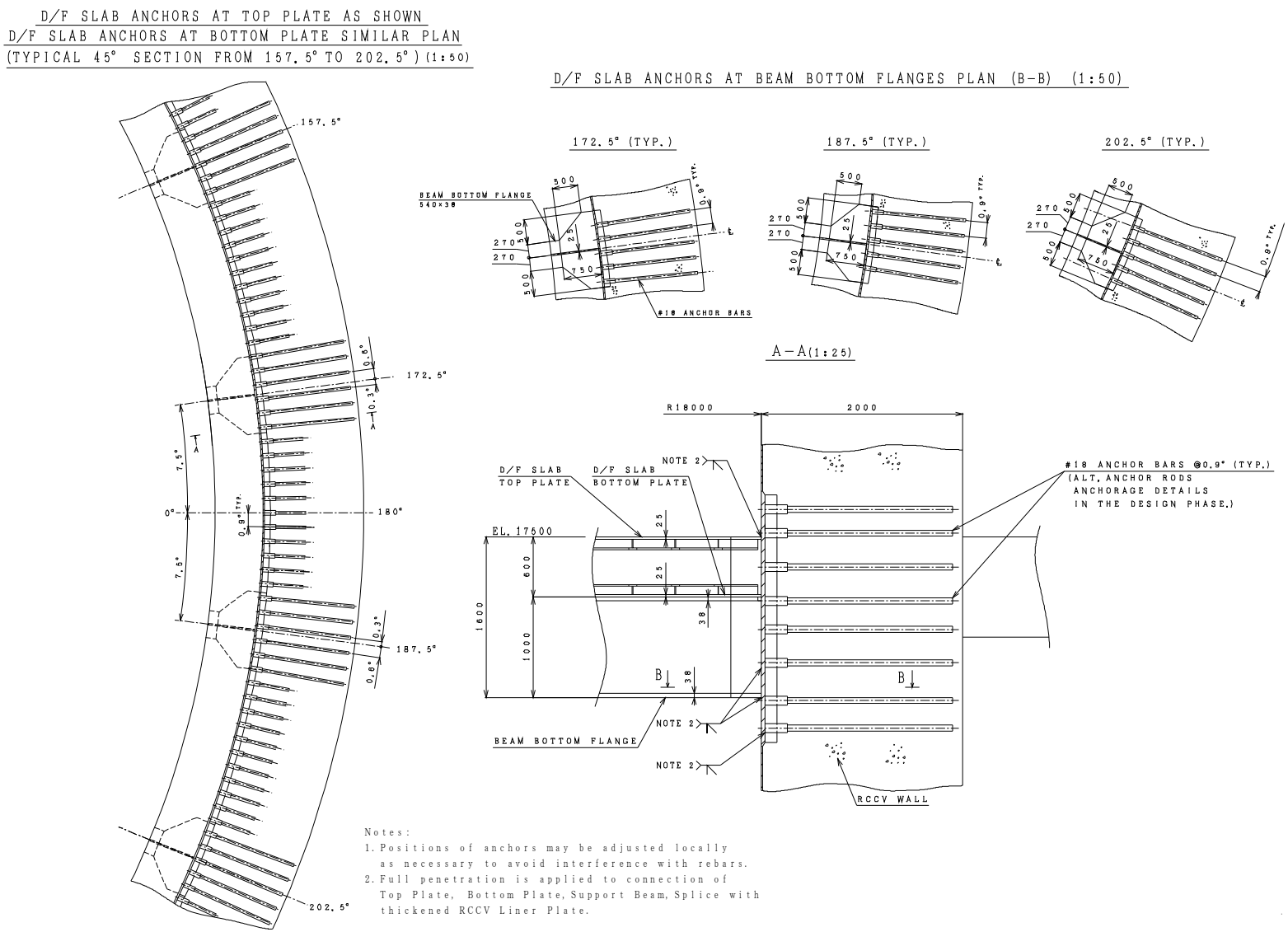

Figure 3G.1-56. Diaphragm Floor Slab Anchor

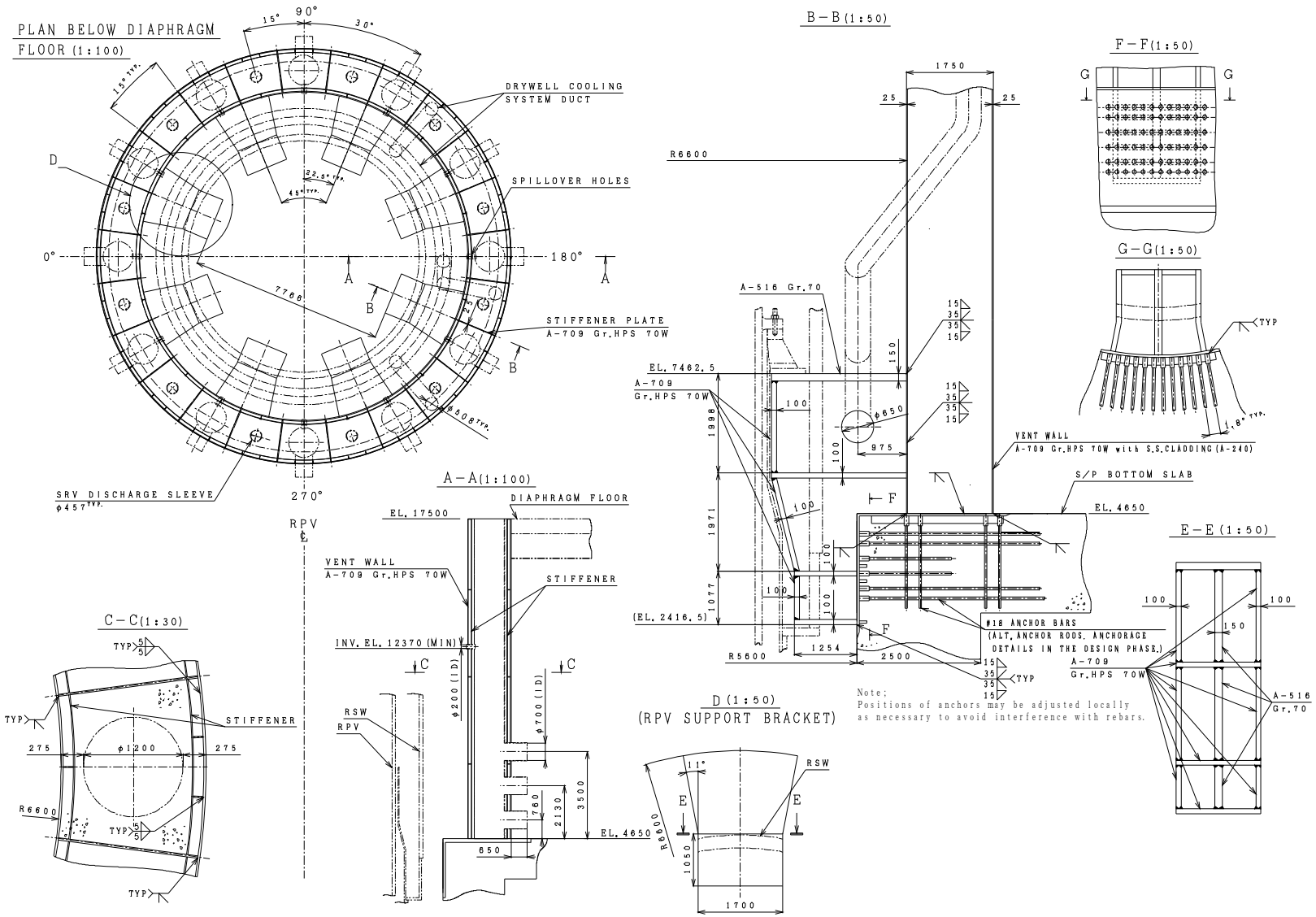

Figure 3G.1-57. RPV Support Bracket & Vent Wall

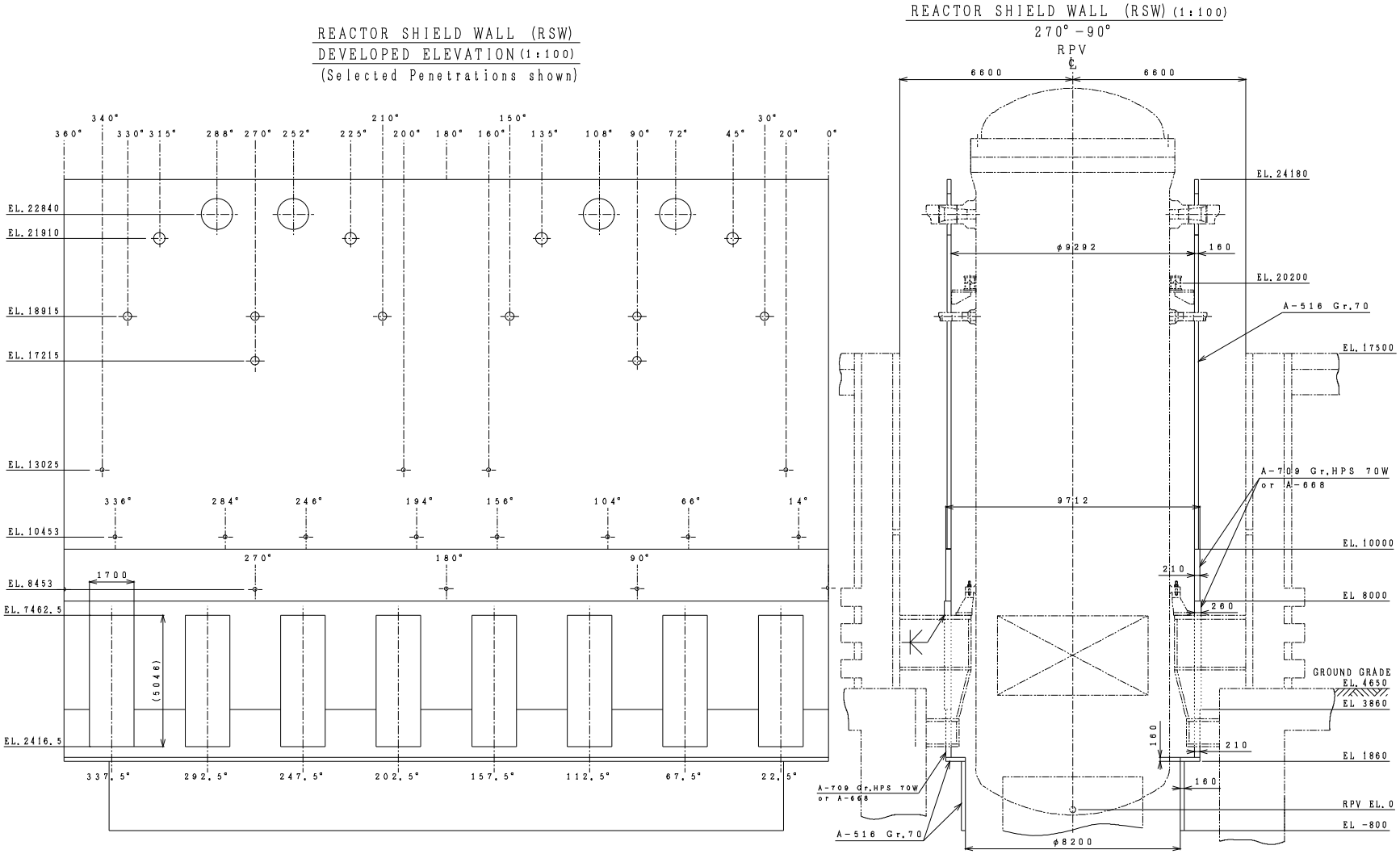

Figure 3G.1-58. Reactor Shield Wall

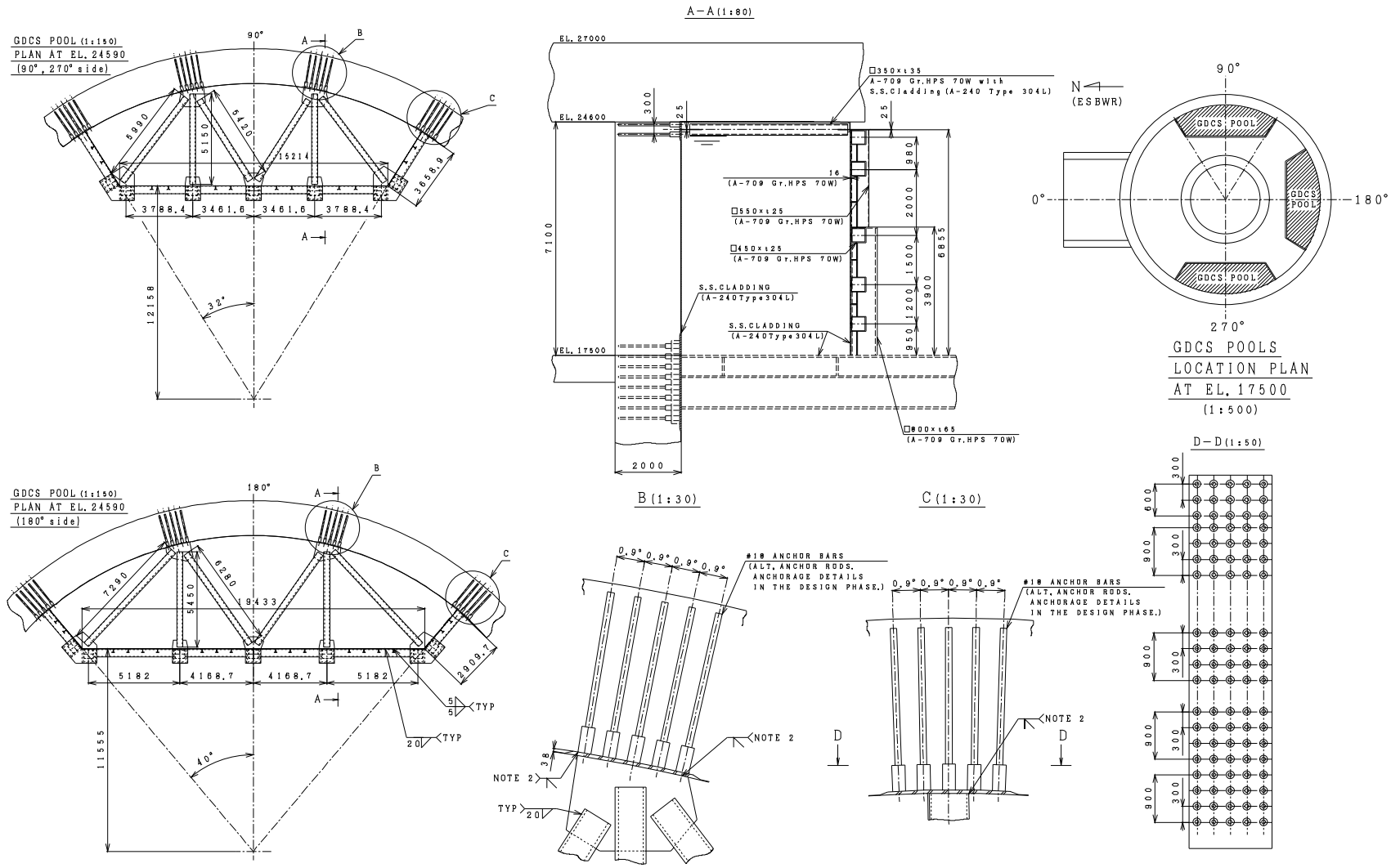

Notes;

1. Positions of anchors may be adjusted locally as necessary to avoid interference with rebars.
2. Full penetration is applied to be connection of Support Beam, Splice with thickened RCCV Liner Plate.

Figure 3G.1-59. GDCS Pool

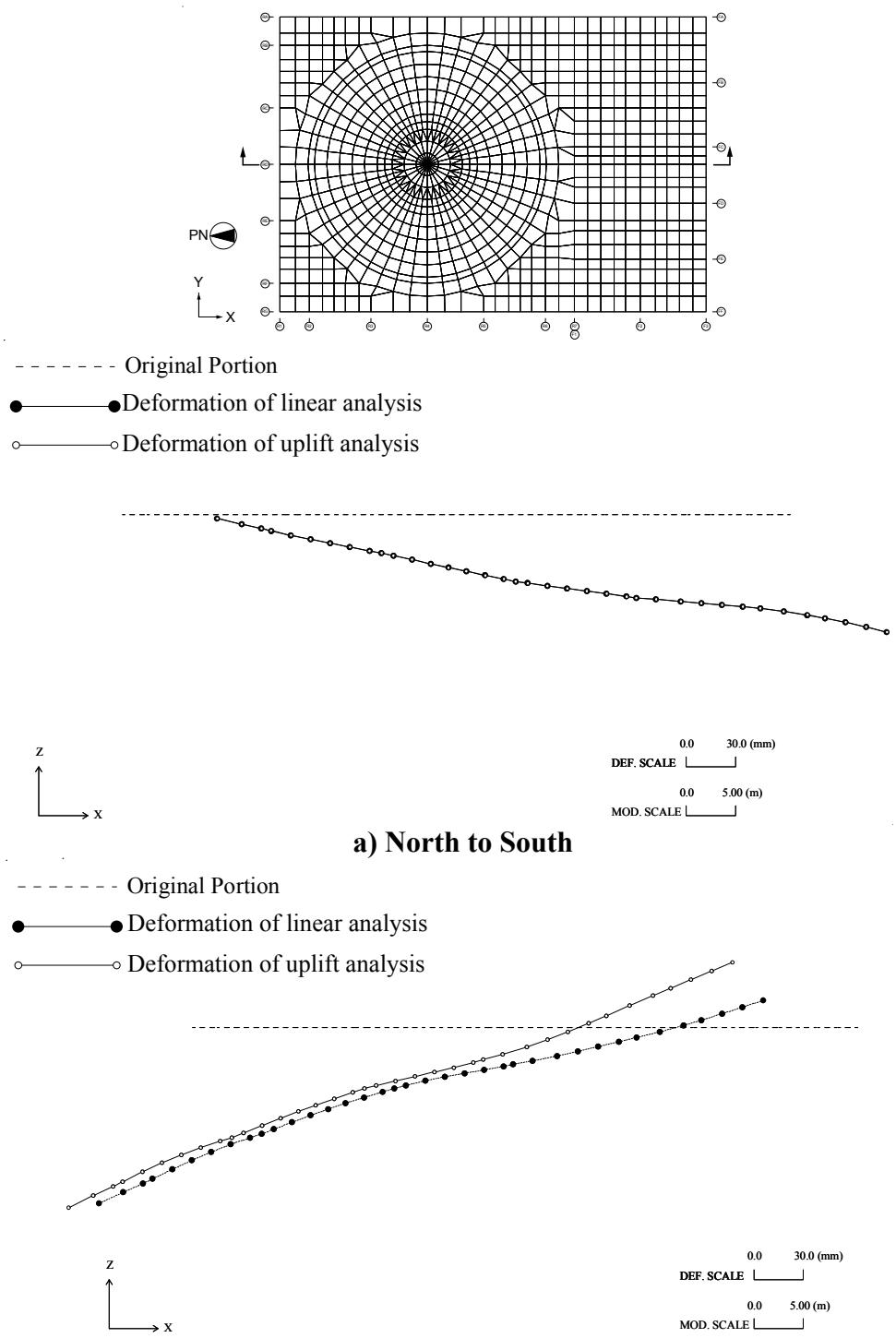

Figure 3G.1-60. Comparison of Basemat Deformation without Tension Springs (NS Direction SSE)

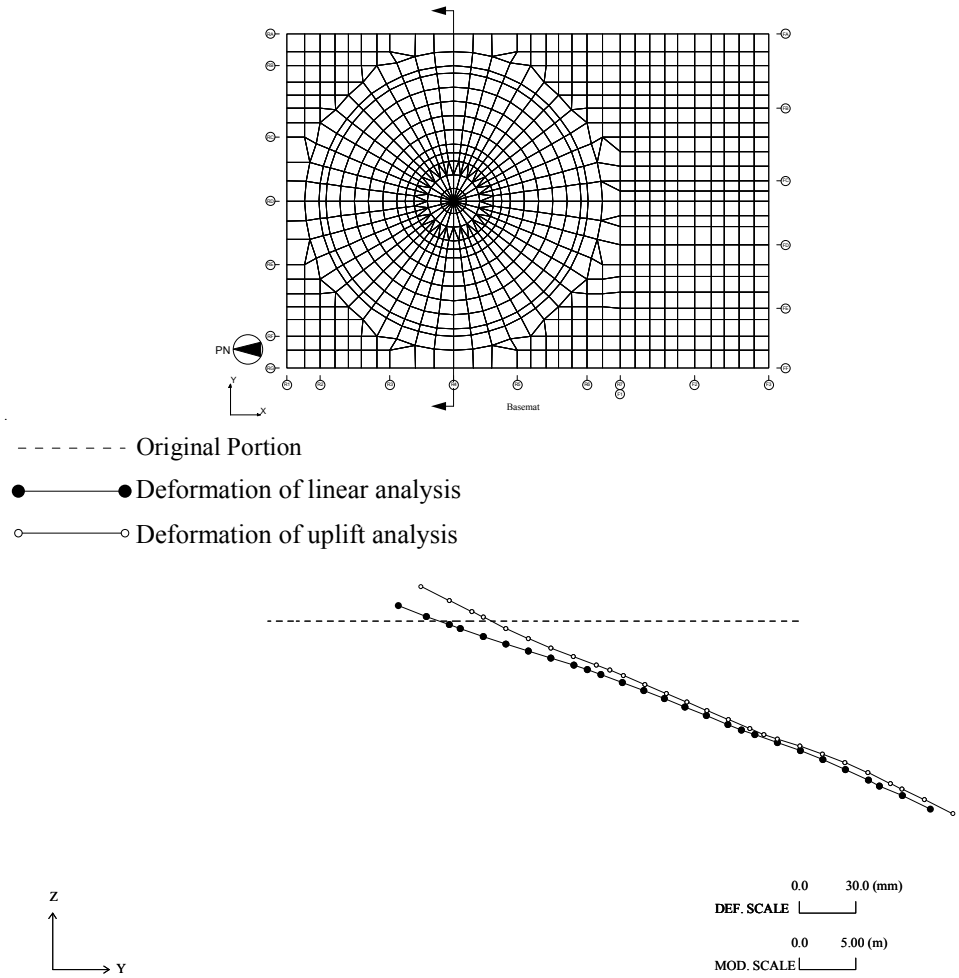

a) West to East

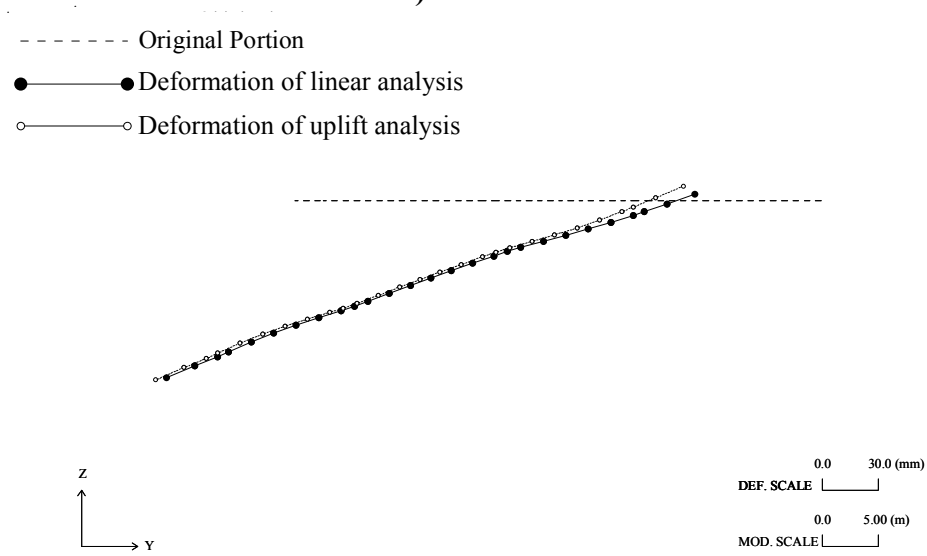

b) East to West

Figure 3G.1-61. Comparison of Basemat Deformation without Tension Springs (EW Direction SSE)

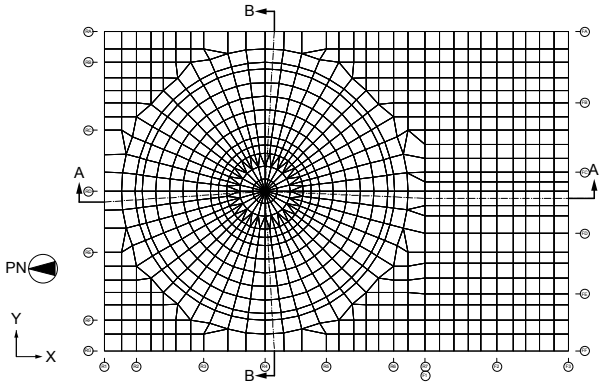

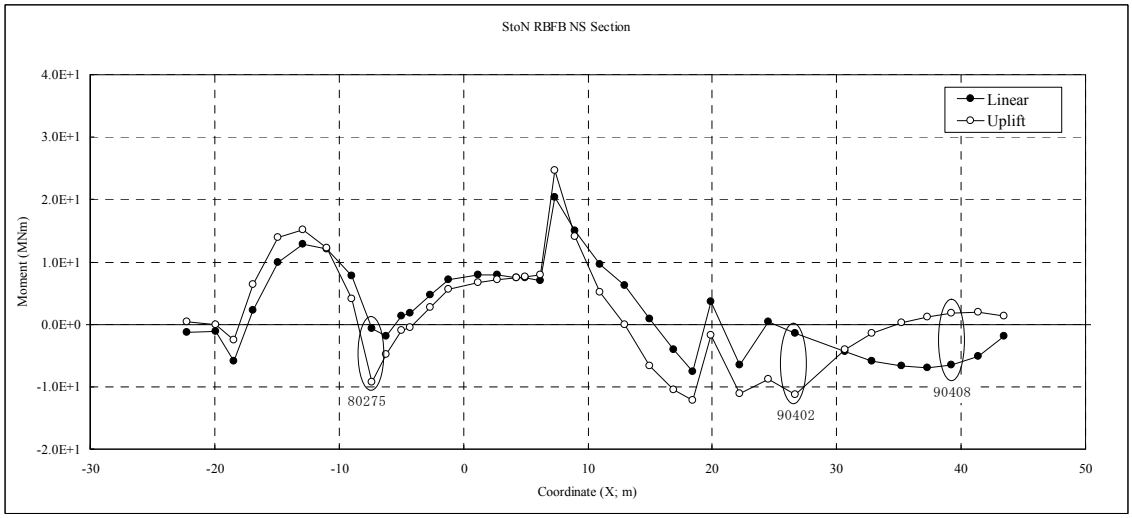

a) Mx in A-A Section

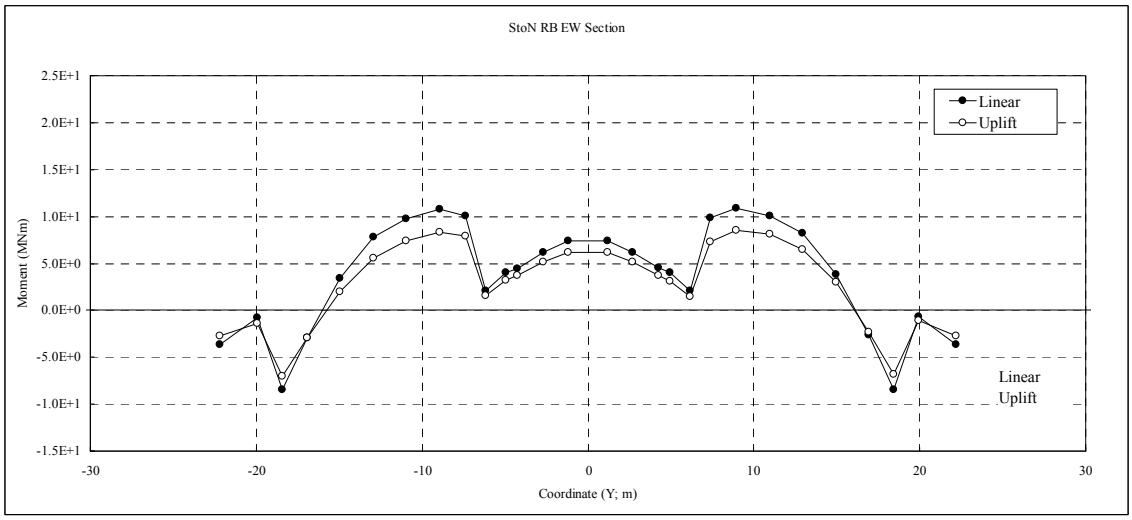

b) My in B-B Section

Figure 3G.1-62. Comparison of Basemat Sectional Moments (S to N SSE)

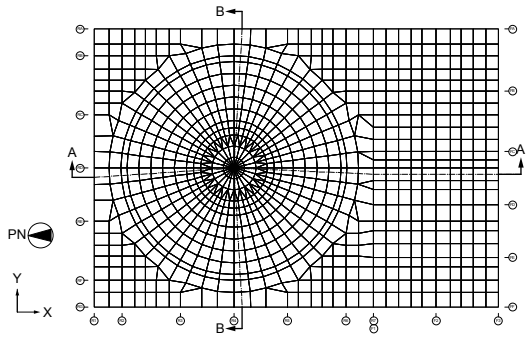

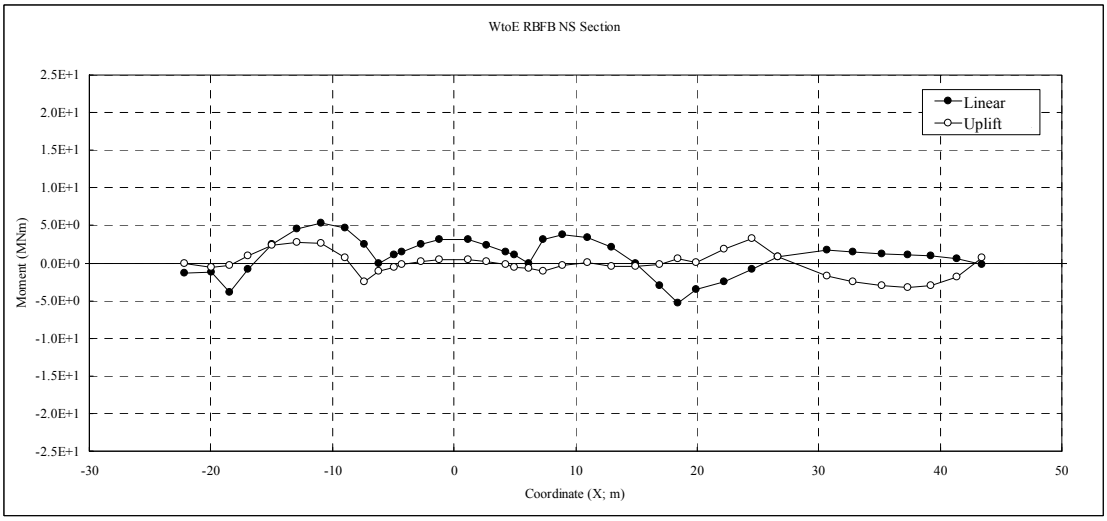

a) Mx in A-A Section

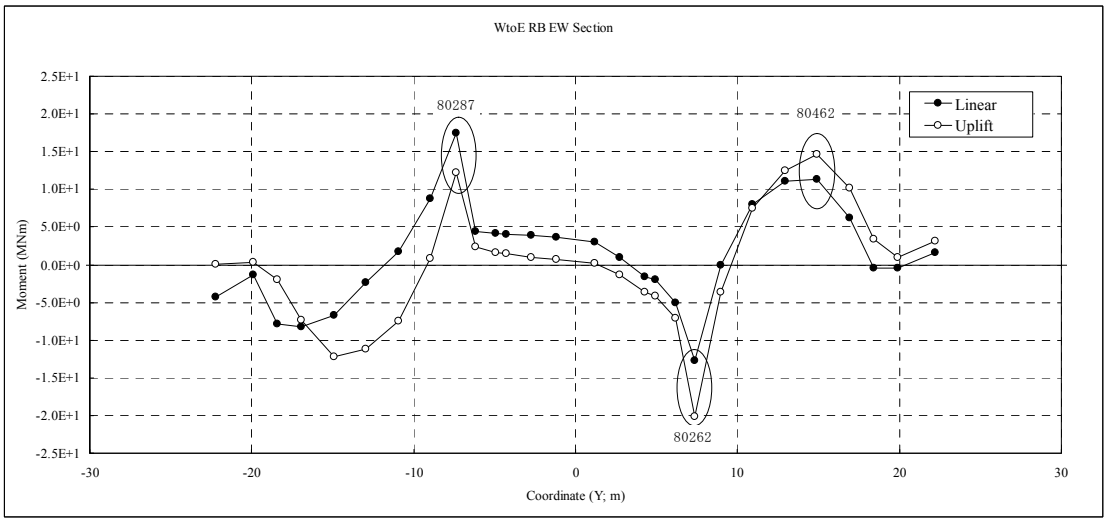

b) My in B-B Section

Figure 3G.1-63. Comparison of Basemat Sectional Moments (W to E SSE)

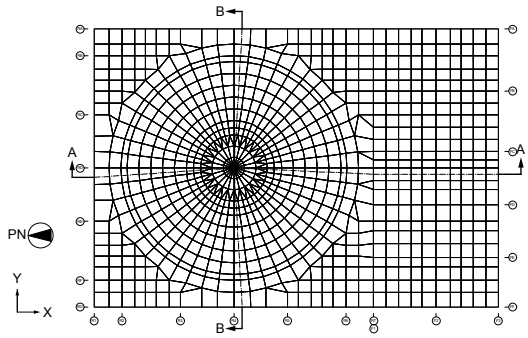

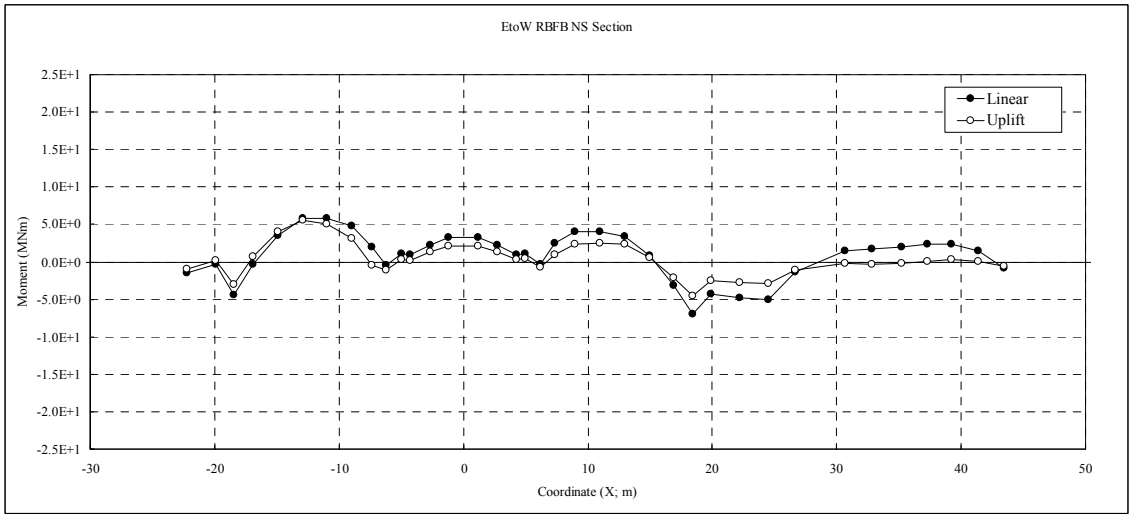

a) Mx in A-A Section

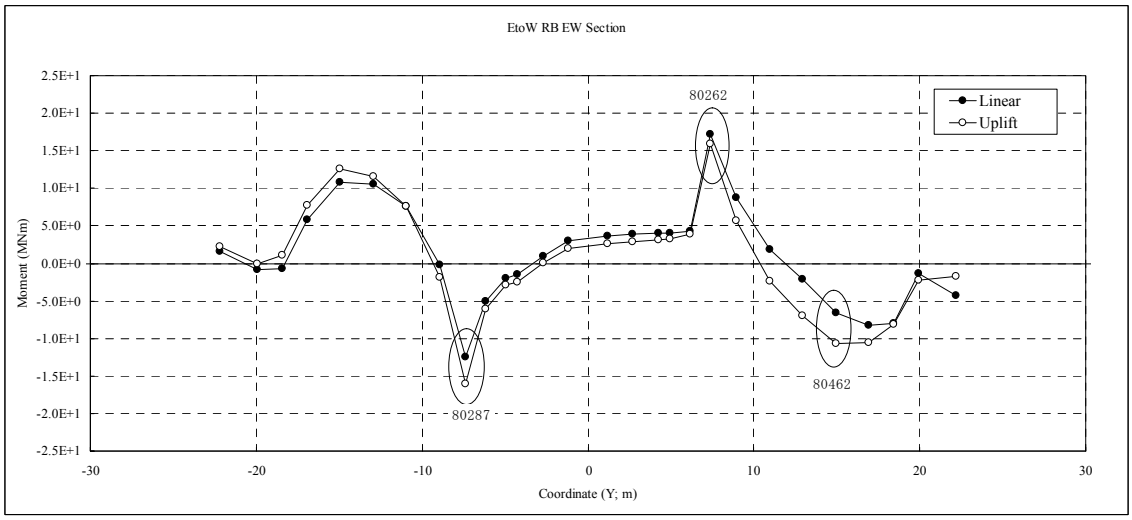

b) My in B-B Section

Figure 3G.1-64. Comparison of Basemat Sectional Moments (E to W SSE)

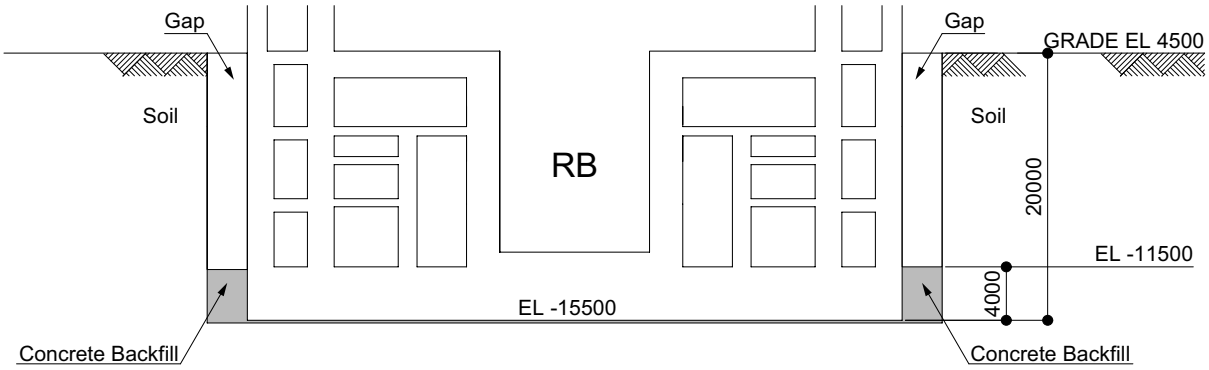

Note: Backfill method for gap and excavation method (e.g., vertical cut, open cut) is determined considering actual site conditions. The gap is completely filled with compacted engineered backfill material.

Figure 3G.1-65. Concrete Backfill in Sliding Evaluation

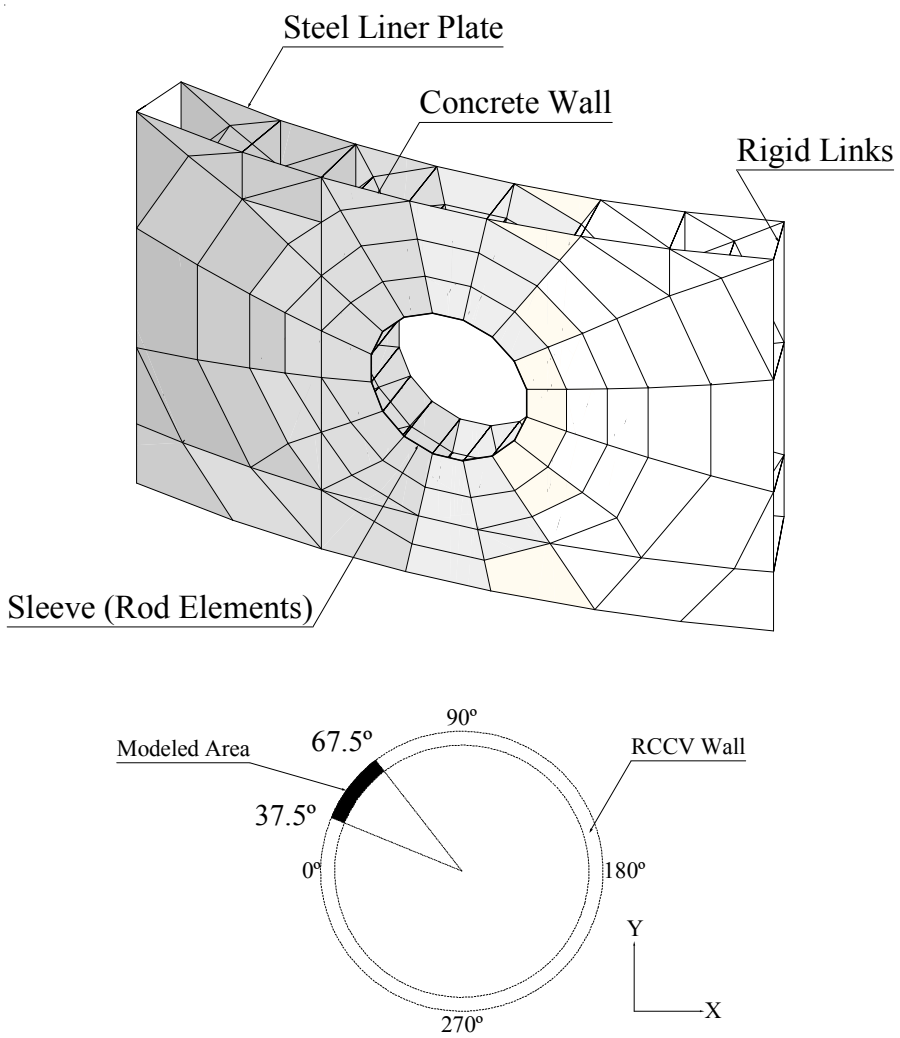

Figure 3G.1-66. Detail Local Finite Element Model of RCCV Wall Around Upper Drywell Personnel Airlock Opening

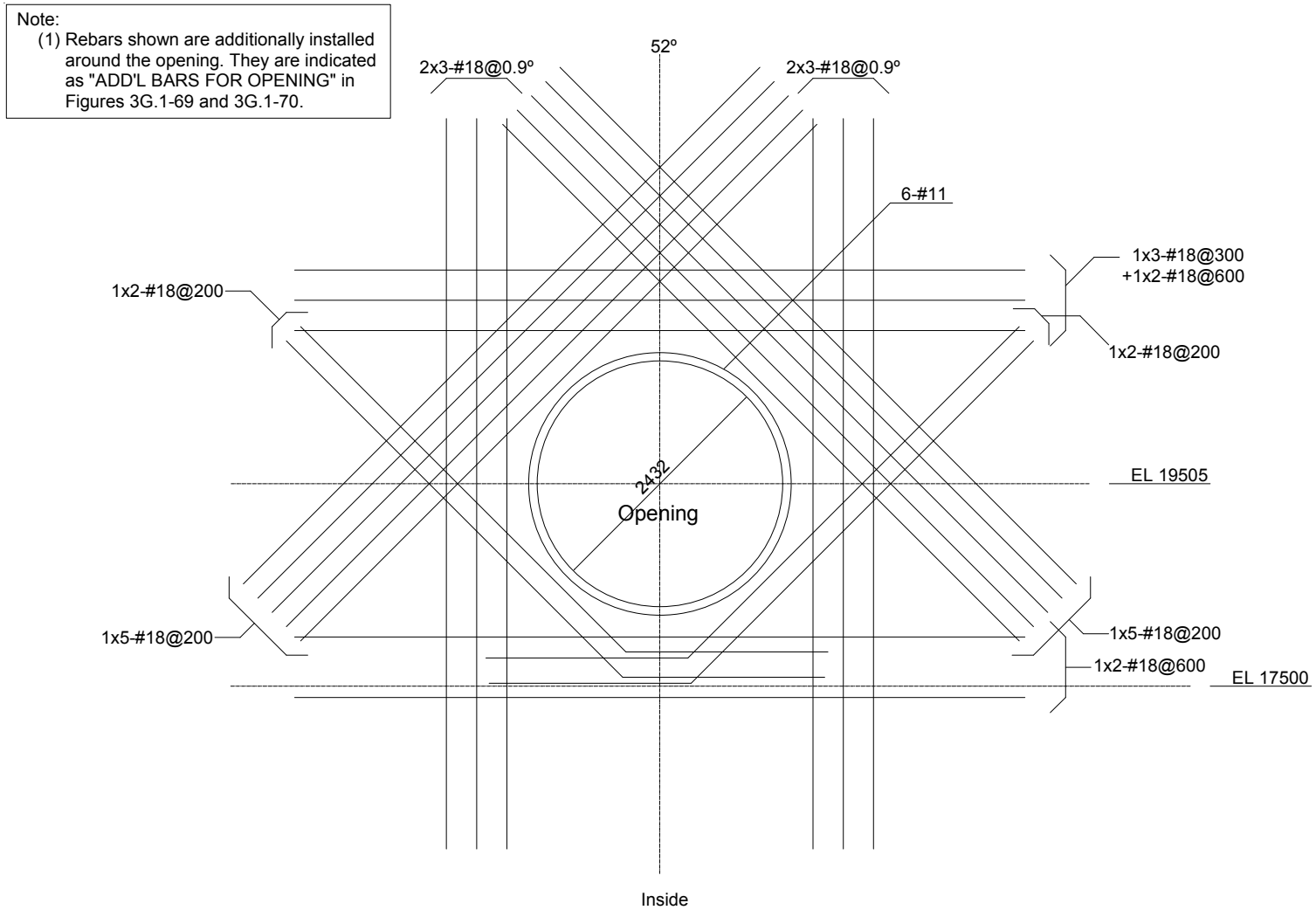

Figure 3G.1-67. Additional Reinforcements in RCCV Wall Around Upper Drywell Personnel Airlock Opening (Inside Face)

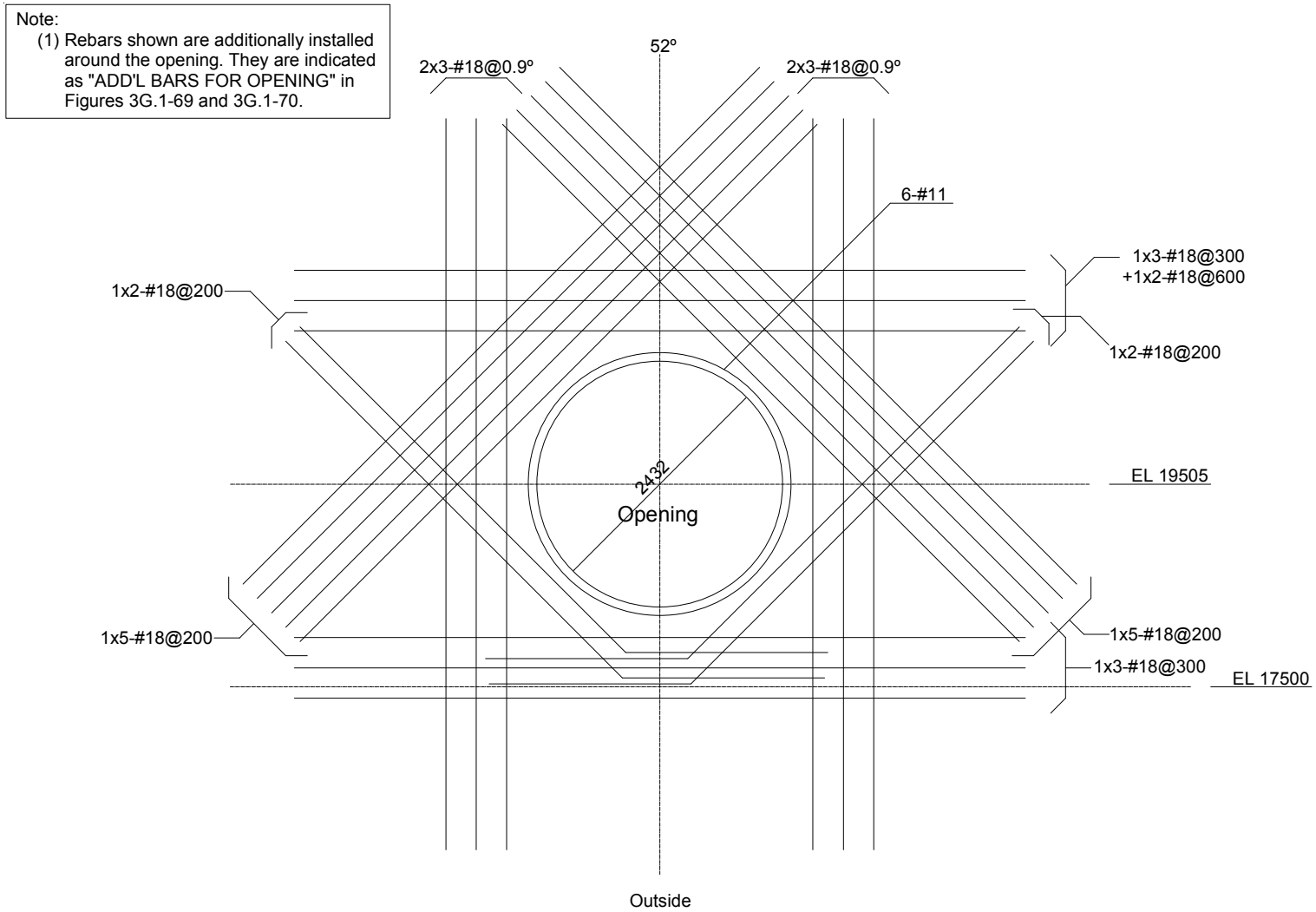

Figure 3G.1-68. Additional Reinforcements in RCCV Wall Around Upper Drywell Personnel Airlock Opening (Outside Face)

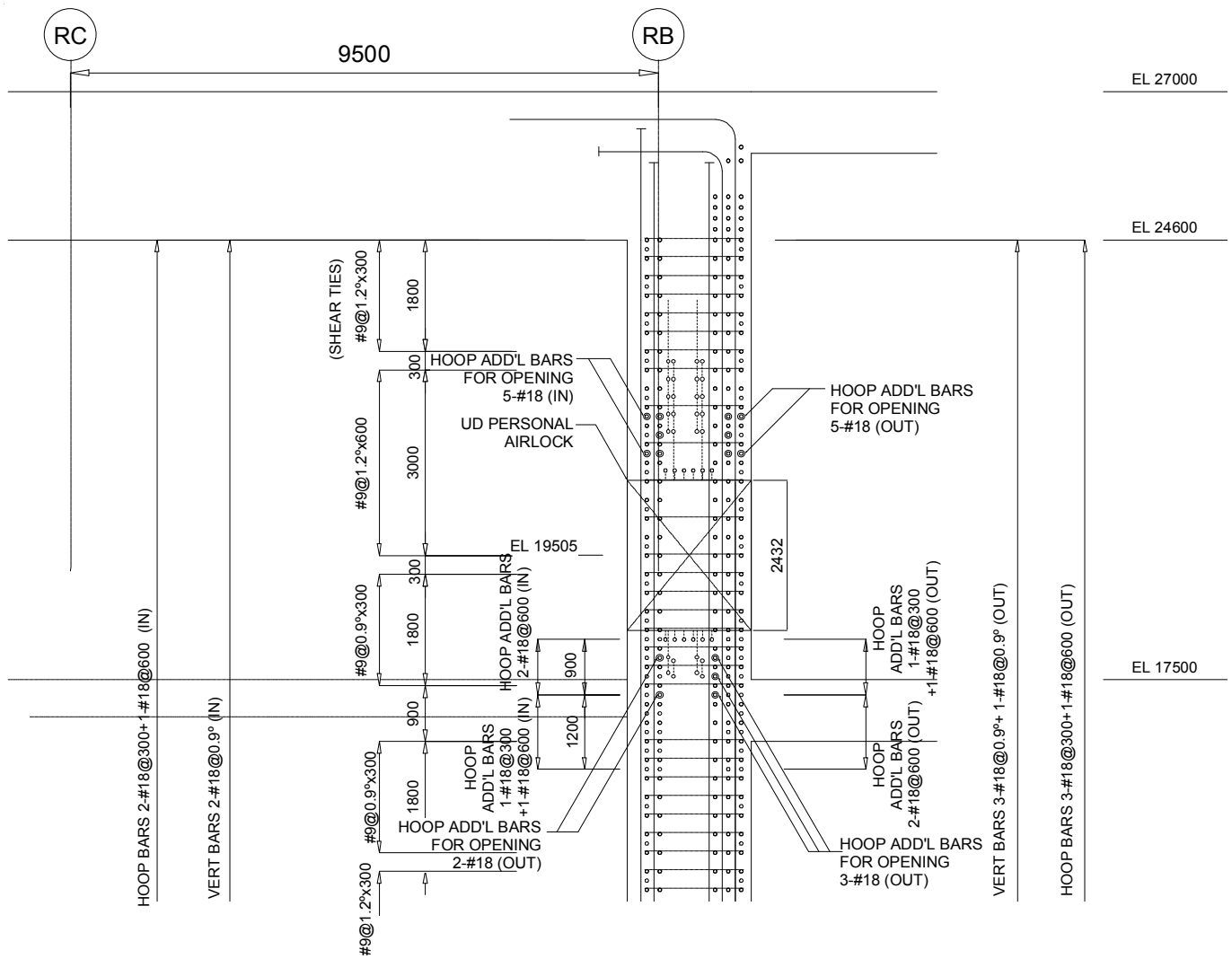

Figure 3G.1-69. Reinforcements in RCCV Wall Around Upper Drywell Personnel Airlock Opening (Section)

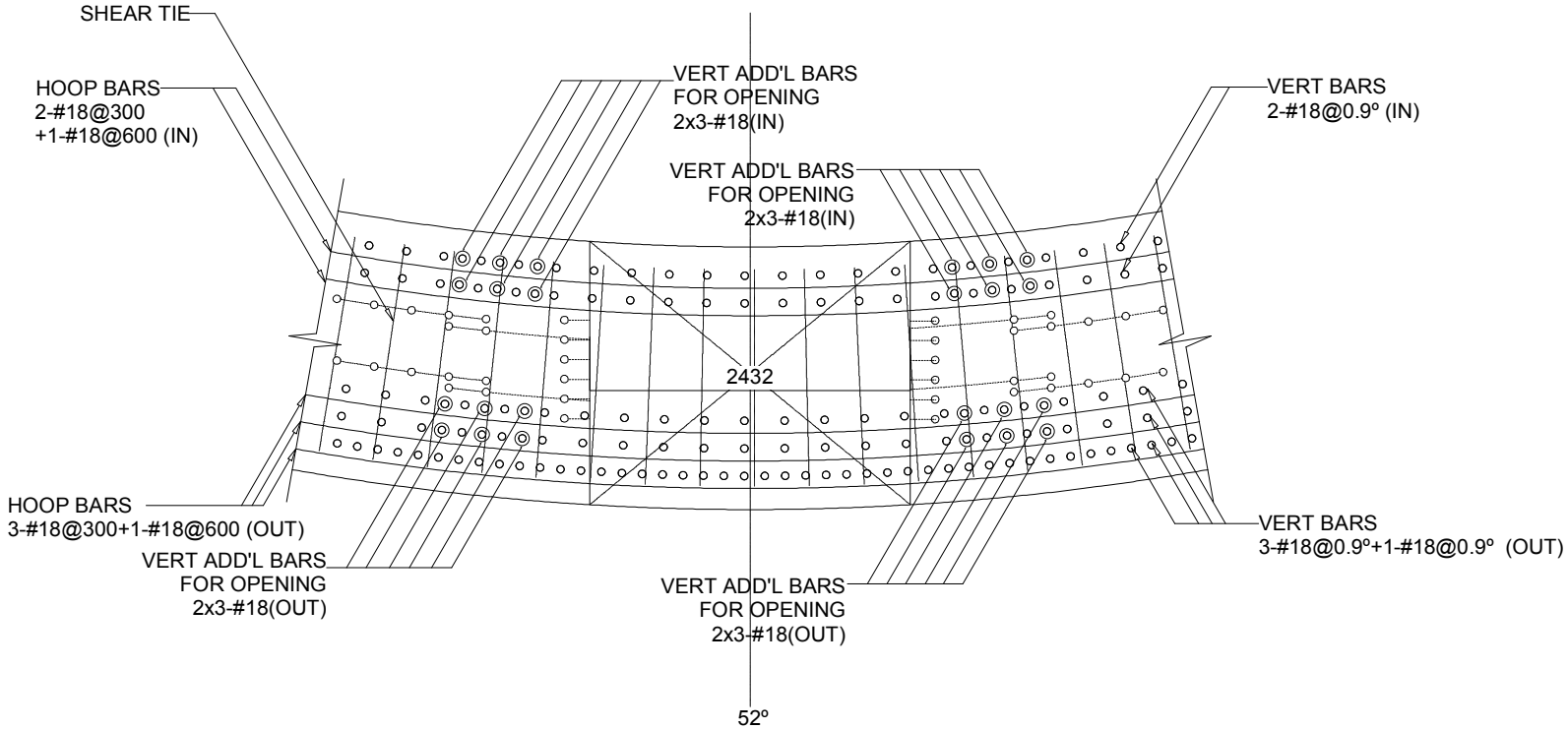

Figure 3G.1-70. Reinforcements in RCCV Wall Around Upper Drywell Personnel Airlock Opening (Plan)

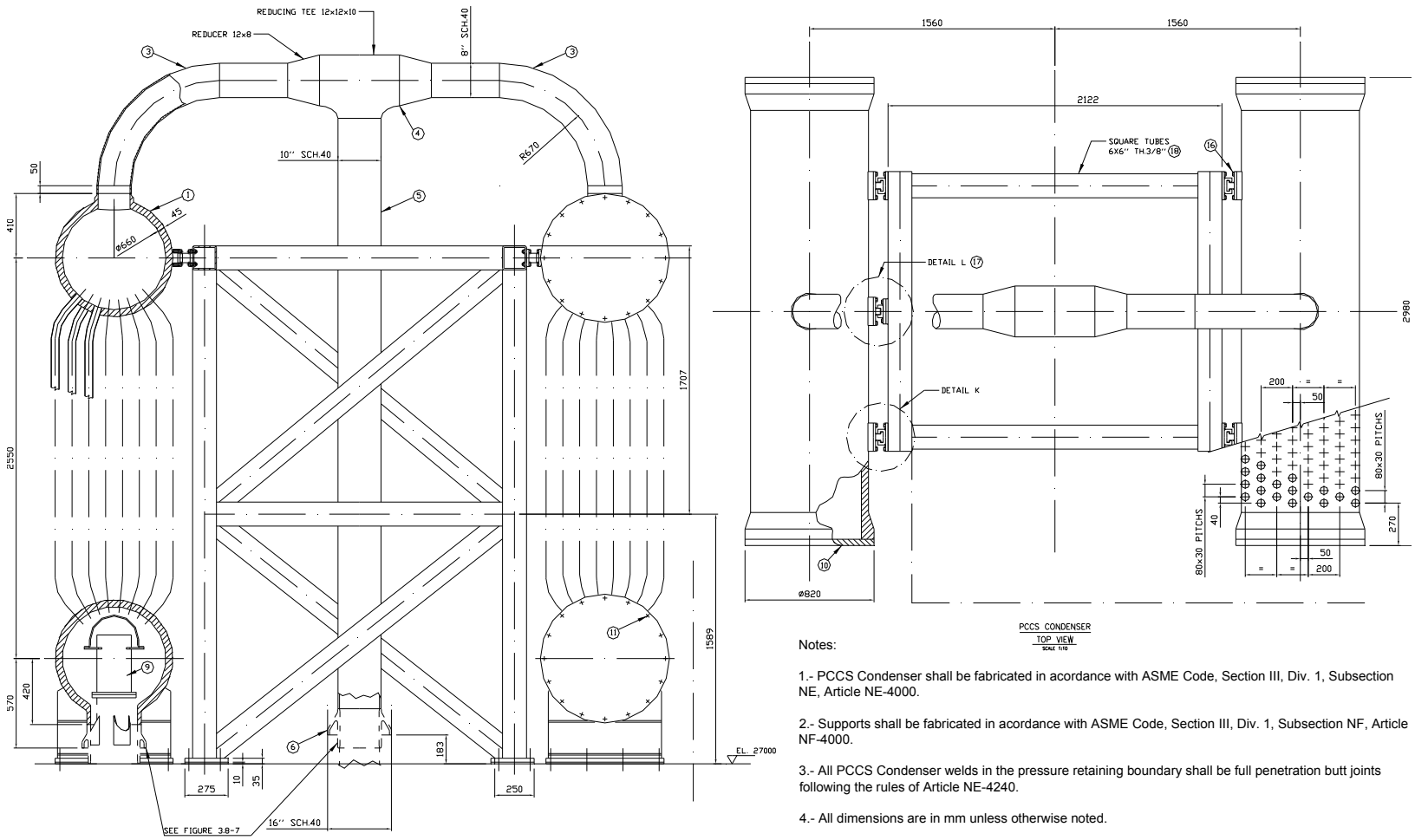

Notes:

1.- PCCS Condenser shall be fabricated in acordance with ASME Code, Section III, Div. 1, Subsection NE, Article NE-4000.

2.- Supports shall be fabricated in acordance with ASME Code, Section III, Div. 1, Subsection NF, Article NF-4000.

3.- All PCCS Condenser welds in the pressure retaining boundary shall be full penetration butt joints following the rules of Article NE-4240.

4.- All dimensions are in mm unless otherwise noted.

5.- Six (6) units as the presented one in this drawing shall be fabricated.

Figure 3G.1-71a. PCCS Condenser and Supports

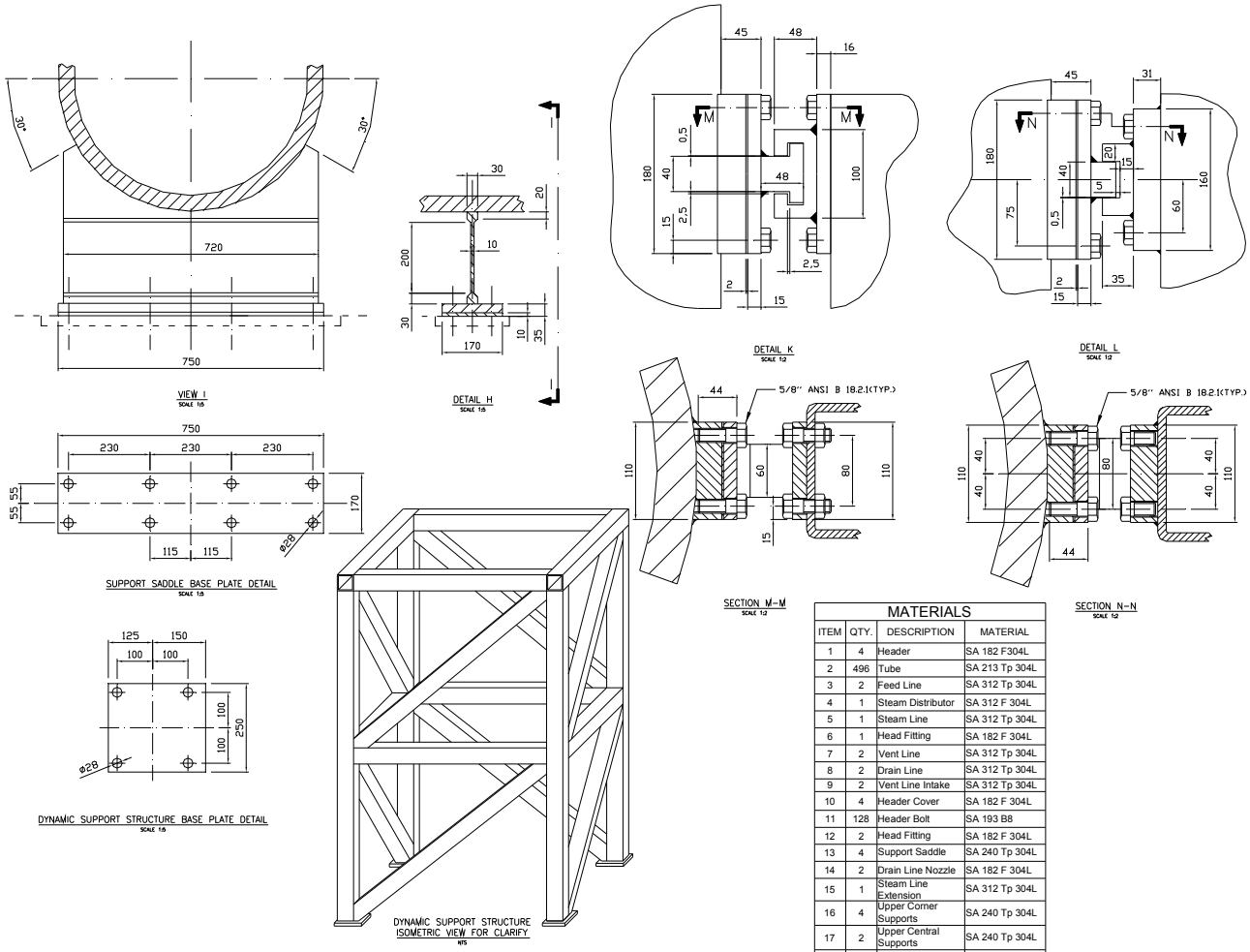

MATERIALS

ITEM	QTY.	DESCRIPTION	MATERIAL
1	4	Header	SA 182 F304L
2	496	Tube	SA 213 Tp 304L
3	2	Feed Line	SA 312 Tp 304L
4	1	Steam Distributor	SA 312 F 304L
5	1	Steam Line	SA 312 Tp 304L
6	1	Head Fitting	SA 182 F 304L
7	2	Vent Line	SA 312 Tp 304L
8	2	Drain Line	SA 312 Tp 304L
9	2	Vent Line Intake	SA 312 Tp 304L
10	4	Header Cover	SA 182 F 304L
11	128	Header Bolt	SA 193 B8
12	2	Head Fitting	SA 182 F 304L
13	4	Support Saddle	SA 240 Tp 304L
14	2	Drain Line Nozzle	SA 182 F 304L
15	1	Steam Line Extension	SA 312 Tp 304L
16	4	Upper Corner Supports	SA 240 Tp 304L
17	2	Upper Central Supports	SA 240 Tp 304L
18	20	Square Tubes	SA 479 Tp 304L

Figure 3G.1-71b. PCCS Condenser and Supports Details

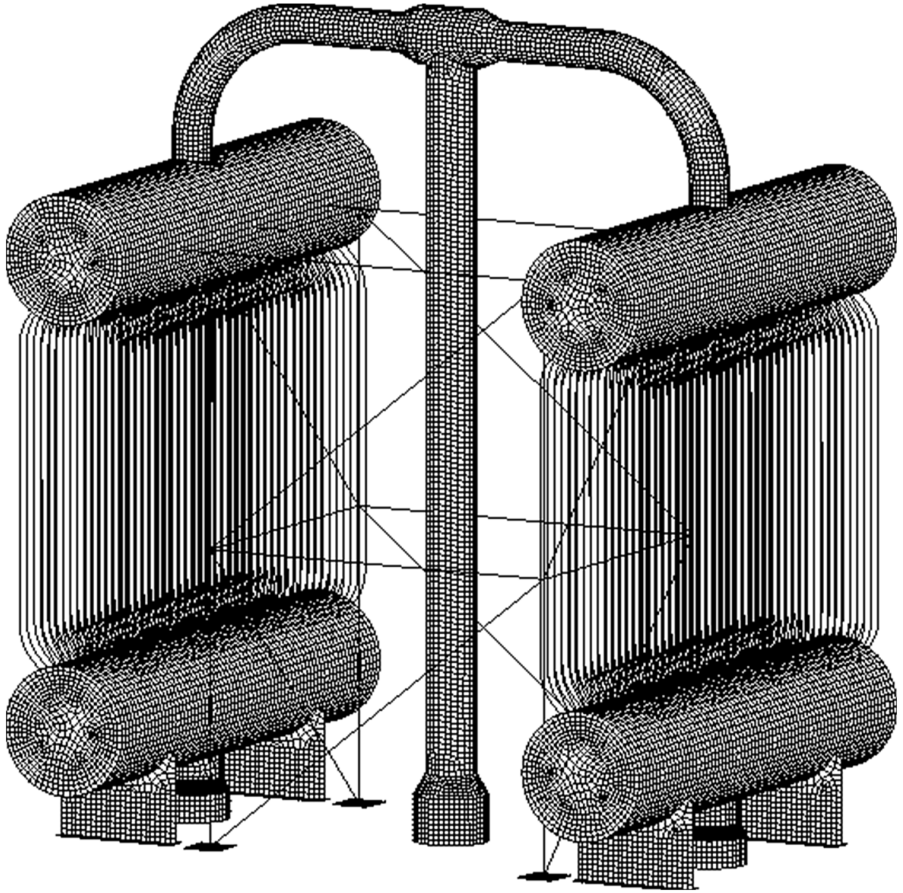

Figure 3G.1-72. Finite Element Model of PCCS Condenser and Supports

3G.2 CONTROL BUILDING

3G.2.1 Objective and Scope

The objective of this subsection is to document the structural design details, inputs and analytical results from the analysis of the CB of the standard ESBWR plant. The scope includes the design and analysis of the structure for normal, severe environmental, extreme environmental, and construction loads.

3G.2.2 Conclusions

The following are the major summary conclusions on the design and analysis of the CB.

- Based on the results of finite element analyses performed in accordance with the design conditions identified in Subsection 3G.2.3, stresses in concrete and reinforcement are less than the allowable stresses per the applicable regulations, codes or standards listed in Section 3.8.
- The factors of safety against floatation, sliding, and overturning of the structure under various loading combinations are higher than the required minimum.
- The thickness of the roof slabs and exterior walls are more than the minimum required to preclude penetration, perforation or spalling resulting from impact of design basis tornado missiles.

3G.2.3 Structural Description

The CB houses the safety-related electrical, control and instrumentation equipment, the control room for the Reactor and Turbine Buildings, and the CB heating, ventilation and air conditioning (HVAC) equipment. The CB is a Seismic Category I structure that houses control equipment and operation personnel.

The CB is a reinforced concrete box type shear wall structure consisting of walls and slabs and is supported by a foundation mat. Steel framing is composite with concrete slab and used to support the slabs for vertical loads. The CB is a shear wall structure designed to accommodate all seismic loads with its walls and the connected floors. Therefore, frame members such as beams or columns are designed to accommodate deformations of the walls in case of earthquake conditions. The CB is adjacent to but structurally independent of the RB (see Figures 1.2-2 through 1.2-5 and Figure 1.2-11).

The key dimensions of the CB are summarized in Table 3.8-8. Figures 3G.2-1 through 3G.2-3 show the outline drawings of the CB.

3G.2.4 Analytical Models

3G.2.4.1 Structural Model

The CB is analyzed utilizing the finite element computer program NASTRAN. The finite element model consists of quadrilateral and beam elements. The quadrilateral elements are used to represent the slabs and walls. Beam elements are used to represent columns and beams. The

model is shown in Figures 3G.2-4 to 3G.2-11. The model includes the whole (360°) portion of the CB taking the application of nonaxisymmetrical loads into consideration.

The nodal points are defined by a right hand Cartesian coordinate system X, Y, Z. This system, called the global coordinate system, has its origin located at the north-west corner of the CB at EL 0 mm. The positive X axis is in the south direction; the Y axis is in the east direction; the Z axis is vertical upward. This coordinate system is shown in Figure 3G.2-4.

3G.2.4.2 Foundation Models

The foundation soil is represented by soil springs. The spring constants for rocking and translations are determined based on the following soil parameters which correspond to the Soft Site conditions described in Appendix 3A:

- Shear wave velocity: 300 m/s (1000 ft/s)
- Unit weight: 0.0196 MN/m^3 (125 lbf/ft^3)
- Shear modulus: 180 MN/m^2 (26110 psi)
- Poisson's Ratio: 0.478

Soil springs are attached to the bottom of the foundation mat, and the constraints by side soil are not included in the model. The values of the soil springs used in the analysis are shown in Table 3G.2-1. The springs have perfectly elastic stiffness.

These spring values are multiplied by the foundation mat nodal point tributary areas to compute the spring constants assigned to the base slab nodal points.

3G.2.5 Structural Analysis and Design

3G.2.5.1 Site Design Parameters

The key site design parameters are described in Subsection 3G.1.5.1.

3G.2.5.2 Design Loads, Load Combinations, and Material Properties

3G.2.5.2.1 Design Loads

3G.2.5.2.1.1 Dead Load (D) and Live Load (L and Lo)

The weights of structures are evaluated using the following unit weights.

- reinforced concrete: 23.5 kN/m^3 (150 lbf/ft^3)
- steel: 77.0 kN/m^3 (490 lbf/ft^3)

Weights of major equipment, miscellaneous structures, piping, and commodities are summarized in Tables 3G.2-2 and 3G.2-3.

Live loads on the CB floor and roof slabs are described in Subsection 3.8.4.3.2.

3G.2.5.2.1.2 Snow and Rain Load

The snow and rain load is applied to the roof slab and is taken as shown in Table 3G.1-2. One hundred percent of the snow load is applied when combined with seismic loads.

3G.2.5.2.1.3 Lateral Soil Pressure at Rest

The lateral soil pressure at rest is applied to the external walls below grade and is based on soil properties given in Table 3G.1-2. Pressures to be applied to the walls are provided in Figure 3G.2-12.

3G.2.5.2.1.4 Wind Load (W)

Wind load is applied to the roof slab and external walls above grade and is based on basic wind speed given in Table 3G.1-2.

3G.2.5.2.1.5 Tornado Load (W_t)

The tornado load is applied to the roof slab and external walls above grade and its characteristics are given in Table 3G.1-2. The tornado load, W_t, is further defined by the combinations described in Subsection 3G.1.5.2.1.5.

3G.2.5.2.1.6 Thermal Load (T_o and T_a)

Thermal loads for the CB are evaluated for the normal operating conditions and abnormal (LOCA in combination with a loss of external alternating current power) conditions. Figure 3G.2-13 shows the section location for temperature distributions for various structural elements of the CB, and Table 3G.2-4 shows the magnitude of equivalent linear temperature distribution.

Stress-free temperature is 15.5°C (60°F).

3G.2.5.2.1.7 Design Seismic Loads

The design seismic loads are obtained by soil–structure interaction analyses, which are described in Appendix 3A. The seismic loads used for design are as follows:

- Figure 3G.2-14: design seismic shears and moments
- Table 3G.2-5: maximum vertical acceleration

The seismic loads are composed of two perpendicular horizontal and one vertical components. The effects of the three components are combined based on the SRSS method as described in Subsection 3.8.1.3.6.

Seismic lateral soil pressure for wall design is provided in Figure 3G.2-15 using the enveloped pressure of the elastic procedure described in ASCE 4-98 Section 3.5.3.2 and SASSI results as described in Subsection 3A.8.8.

3G.2.5.2.2 Load Combinations and Acceptance Criteria

Table 3.8-15 gives load combinations for the safety-related reinforced concrete structure. Based on previous experience, critical load combinations are selected for the CB design. They are mainly combinations including design basis accident (DBA) loads and seismic loads as shown in Table 3G.2-6. The acceptance criteria for the selected combinations are also included in Table 3G.2-6.

3G.2.5.2.3 Material Properties

Properties of the materials used for the CB design analyses are the same as those for the RB, and they are described in Subsection 3G.1.5.2.3.

3G.2.5.3 Stability Requirements

The stability requirements for the CB foundation are same as those for the RB, and they are described in Subsection 3G.1.5.3.

3G.2.5.4 Structural Design Evaluation

The evaluation of the Seismic Category I structures in the CB is performed using the same procedure as the RB, which is described in Subsection 3G.1.5.4.

The locations of the sections that are selected for evaluation are indicated in Figures 3G.2-5 through 11. They are selected, in principle, from the center and both ends of wall and slab, where it is reasonably expected that the critical stresses appear based on engineering experience and judgment. Tables 3G.2-7 through 3G.2-11 show the forces and moments at the selected sections from NASTRAN analysis. Element forces and moments listed in the tables are defined with relation to the element coordinate system shown in Figure 3G.2-16. Tables 3G.2-12 through 3G.2-15 show the combined forces and moments in accordance with the selected load combinations listed in Table 3G.2-6.

Table 3G.2-16 lists the sectional thicknesses and rebar ratios used in the evaluation. The values are retrieved from the outline drawings shown in Figures 3G.2-1 through 3G.2-3.

Tables 3G.2-17 through 3G.2-24 compares the rebar and concrete stresses at these sections for the representative elements with the allowable stresses, which are conservatively taken to be the more limiting of ACI 349-01 and ASME Section III Division 2. Table 3G.2-25 summarizes evaluation results for transverse shear in accordance with ACI 349, Chapter 11.

3G.2.5.4.1 Shear Walls

The maximum rebar stress of 287.6 MPa (41.71 ksi) is found in the vertical rebar in the wall at EL -7400 due to the load combination CB-9 as shown in Table 3G.2-24. The maximum horizontal rebar stress is found to be 219.9 MPa (31.89 ksi) in 2F wall at EL 9060 due to the load combination CB-9. The maximum transverse shear force is found to be 0.791 MN/m (4.52 kips/in) against the shear strength of 2.235 MN/m (12.76 kips/in) in the wall at EL –2000 as shown in Table 3G.2-25.

3G.2.5.4.2 Floor Slabs

The maximum rebar stress of 178.6 MPa (25.90 ksi) is found in the roof at EL 13800 due to the load combination CB-9 as shown in Table 3G.2-23. The maximum transverse shear force is found to be 0.318 MN/m (1.81 kips/in) against the shear strength of 0.353 MN/m (2.02 kips/in) at EL 4650 slab as shown in Table 3G.2-25.

3G.2.5.4.3 Foundation Mat

The maximum rebar stress is found to be 265.0 MPa (38.43 ksi) due to the load combination CB-9 as shown in Table 3G.2-23. The maximum transverse shear force is found to

be 3.159 MN/m (18.04 kips/in) against the shear strength of 4.943 MN/m (28.23 kips/in) as shown in Table 3G.2-25.

3G.2.5.5 Foundation Stability

The stabilities of the CB foundation against overturning, sliding and floatation are evaluated. The energy approach is used in calculating the factor of safety against overturning.

The factors of safety against overturning, sliding and floatation are given in Table 3G.2-26. All of these meet the acceptance criteria given in Table 3.8-14. In the sliding evaluation the gap between the building and excavated soil is backfilled with concrete up to the top level of the basemat as shown in Figure 3G.2-17.

Maximum soil bearing stress is found to be 292 kPa (6100 psf) due to dead plus live loads. Maximum bearing stresses for load combinations involving SSE are shown in Table 3G.2-27 for various site conditions.

3G.2.5.5.1 Foundation Settlement

The basemat design is checked against the normal and differential settlement of the CB. It is found that the basemat can resist the maximum settlement at mat foundation corner of 18 mm (0.7 in.) and the settlement averaged at four corners of 12 mm (0.5 in.). The relative displacement between two corners along the longest dimension of the building basemat calculated under linearly varying soil stiffness is 14 mm (0.6 in). The estimated differential settlement between buildings (RB/FB and CB) is 85 mm (3.3 in.). These values are specified as maximum settlements in Table 2.0-1.

3G.2.5.6 Tornado Missile Evaluation

The CB is shown in Figure 3G.2-3. The minimum thickness required to prevent penetration, concrete spalling and scabbing is evaluated. The methods and procedures are shown in Subsection 3.5.3.1.1.

Table 3G.2-1

Soil Spring Constants for the CB Analysis Model

Direction of Spring		Loads	Stiffness ($MN/m/m^2$)
Horizontal	X-direction	All	19.650
	Y-direction	All	20.378
Vertical		Horizontal Seismic Loads	79.174
		Other Loads	29.177

Table 3G.2-2

Equipment Load of CB

Description	Weight	Remarks
Division Distributed Control and Information System (DCIS) Room	216 kN	per one room
Main Control Room Display Consoles	230 kN	
Nonsafety-related DCIS Room	490 kN	per one room
HVAC Units	1489 kN	total

Table 3G.2-3

Miscellaneous Structures, Piping, and Commodity Load of CB

Elevation (mm)	Area Load
13,800	2.4 kN/m^2 (50psf)
9,060	2.4 kN/m^2 (50psf)
4,650	2.4 kN/m^2 (50psf)
-2,000	2.4 kN/m^2 (50psf)
-7,400	2.4 kN/m^2 (50psf)

Table 3G.2-4

Equivalent Liner Temperature Distributions at Various Sections

Section*1	Side*2		Equivalent Linear Temperature*3 (°C)			
			Normal Operation Winter		DBA Winter	
	1	2	T_d	T_g	T_d	T_g
M1	DCIS	GR	18.1	5.1	31.5	32.0
W1	DCIS	GR	17.7	4.4	29.2	27.4
W2	MCR	GR	17.7	4.4	21.3	11.5
W3	DCIS	AT	-14.5	46.8	-2.4	69.0
W4	HVAC	AT	-20.0	36.0	-7.9	57.5
S1	MCR	DCIS	21.0	0.0	40.0	-10.3
S2	DCIS	MCR	21.0	0.0	40.0	10.3
S3	HVAC	DCIS	15.5	-5.7	45.0	-5.2
S4	AT	HVAC	-20.0	-36.0	-7.9	-57.5

Note *1: See Figure 3G.2-13 for the location of sections.

Note *2: MCR: Main Control Room
DCIS: Distributed Control and Information System
HVAC: Heating, Ventilation and Air Conditioning
AT: Air
GR: Ground

Note *3: T_d: Average Temperature
T_g: Surface Temperature Difference (positive when temperature at Side 1 is higher)

Table 3G.2-5

Maximum Vertical Acceleration

Walls			Slabs		
Elev. (m)	Node No.	Max. Vertical Acceleration (g)	Elev. (m)	Node No.	Max. Vertical Acceleration (g)
13.80	6	1.00	13.80	9001	2.19
9.06	5	0.86		9002	1.34
4.65	4	0.74		9003	1.43
-2.00	3	0.56	9.06	9101	2.00
-7.40	2	0.51		9102	1.26
-10.40	1	0.51		9103	1.43
			4.65	9201	1.30
				92.02	1.43
			-2.00	9301	1.39

See Figure 3A.7-6 for the node numbers.

Table 3G.2-6

Selected Load Combinations for the CB

Category	Load Combination								Acceptance Criteria*1
	No. *2	D	L	T_o	T_a	E'	W	W_t	
Severe	CB-3	1.4	1.7				1.7		U
Environmental	CB-4	1.05	1.3	1.3			1.3		U
Tornado	CB-7	1.0	1.0	1.0				1.0	U
LOCA + SSE	CB-9	1.0	1.0		1.0	1.0			U

*1: U = Conservatively taken as envelope of "Allowable Stress as in ASME Section III, Div. 2, Subsection CC-3420 for Factored Load Combination" and "Required section strength based on the strength design method per ACI 349-01."

*2: Based on Table 3.8-15.

Table 3G.2-7

Results of NASTRAN Analysis: Dead Load

Location	Element ID	Nx (MN/m)	Ny (MN/m)	Nxy (MN/m)	Mx (MNm/m)	My (MNm/m)	Mxy (MNm/m)	Qx (MN/m)	Qy (MN/m)
Basemat EL-7.4m	67	0.026	-0.709	0.027	-0.987	-1.078	0.088	0.195	-0.160
	72	-0.050	0.071	0.010	-0.469	-0.218	-0.025	-0.623	0.037
	115	-0.729	-0.274	0.309	-0.219	-0.213	-0.371	-0.027	-0.660
	120	-0.058	-0.027	-0.157	-0.110	-0.173	0.675	-0.033	-0.021
Slab B1F EL-2.0m	567	-0.004	0.729	-0.044	-0.049	-0.023	-0.009	-0.077	0.022
	572	0.080	0.122	-0.012	-0.021	-0.017	0.008	0.100	-0.006
	615	0.167	0.128	-0.255	-0.034	-0.006	0.026	-0.042	0.004
	620	0.040	0.042	0.056	-0.024	-0.024	-0.029	0.034	0.039
Slab 1F EL4.65m	1067	0.071	0.031	-0.002	0.168	0.058	-0.011	0.030	0.025
	1072	-0.013	0.032	0.002	-0.028	-0.009	0.000	0.073	0.005
	1115	0.110	0.008	0.010	-0.016	-0.152	-0.009	-0.001	0.144
	1120	0.020	0.015	0.055	-0.016	-0.015	-0.015	0.019	0.025
Slab 2F EL9.06m	1567	0.012	0.061	-0.002	0.081	0.002	-0.004	0.016	0.010
	1572	0.018	-0.006	0.001	-0.030	-0.012	0.000	0.061	0.001
	1615	0.136	0.114	-0.025	-0.007	-0.117	-0.007	0.007	0.128
	1620	0.015	0.009	0.018	-0.015	-0.015	-0.014	0.017	0.022
Roof EL13.8m	1867	-0.081	-0.055	0.003	0.152	0.050	-0.007	0.023	0.004
	1872	-0.033	-0.104	0.003	-0.029	-0.015	0.006	0.057	0.001
	1915	-0.074	-0.105	-0.001	-0.004	-0.122	-0.008	-0.004	0.136
	1920	-0.010	-0.043	0.012	-0.017	-0.015	-0.037	0.016	0.021
Wall EL-7.4m ~EL-2.0m	6007	-0.263	-0.753	-0.224	-0.014	0.097	-0.006	-0.059	0.070
	4006	0.028	-0.925	0.015	-0.035	-0.188	0.001	-0.002	-0.045
	4010	0.070	-0.211	-0.113	0.016	-0.073	-0.007	-0.034	-0.042
Wall EL-2.0m ~EL4.65m	6043	0.172	-1.275	-0.295	0.041	0.025	0.008	0.044	0.002
	4036	0.070	-0.620	-0.007	0.021	0.116	-0.002	-0.002	0.036
	4040	-0.018	-0.362	0.045	-0.005	0.028	0.014	0.019	0.021
Wall EL4.65m ~EL9.06m	6081	0.006	-0.592	-0.031	-0.014	-0.116	-0.007	0.000	-0.062
	4066	-0.012	-0.338	0.004	0.005	0.022	-0.002	-0.002	0.018
	4070	-0.016	-0.263	0.095	-0.003	0.007	0.001	0.006	0.007
Wall EL9.06m ~EL13.8m	6117	-0.003	-0.330	-0.053	-0.009	-0.060	0.005	0.005	-0.077
	4096	-0.067	-0.164	0.001	0.006	0.033	0.000	-0.002	0.038
	4100	-0.009	-0.113	0.083	0.003	0.009	-0.001	-0.001	0.010

Table 3G.2-8

Results of NASTRAN Analysis: Thermal Load (LOCA: Winter)

Location	Element ID	Nx (MN/m)	Ny (MN/m)	Nxy (MN/m)	Mx (MNm/m)	My (MNm/m)	Mxy (MNm/m)	Qx (MN/m)	Qy (MN/m)
Basemat EL-7.4m	67	-0.409	-1.291	0.169	6.783	6.419	-0.132	0.291	-0.113
	72	-0.189	-0.279	0.059	1.916	5.868	-0.007	0.290	0.127
	115	-0.198	-0.082	0.185	6.662	2.336	-0.255	0.533	0.941
	120	-0.949	-1.034	-0.271	3.316	3.332	1.777	1.350	1.269
Slab B1F EL-2.0m	567	-0.720	0.380	0.045	-0.078	-0.091	0.002	-0.003	0.006
	572	0.331	-0.756	-0.056	-0.030	-0.063	0.003	-0.023	0.000
	615	-0.858	0.641	-0.723	-0.078	-0.033	0.006	-0.032	-0.073
	620	-0.970	-0.965	-1.402	-0.066	-0.065	0.009	0.007	0.005
Slab 1F EL4.65m	1067	-1.315	-0.447	-0.012	0.062	0.026	0.001	0.003	-0.003
	1072	-0.170	-1.780	-0.097	0.184	0.081	0.007	-0.061	-0.001
	1115	-1.419	0.046	0.018	0.065	0.113	0.002	-0.008	-0.017
	1120	-1.987	-1.963	-2.417	0.130	0.129	-0.007	-0.033	-0.031
Slab 2F EL9.06m	1567	-2.552	-1.076	0.015	-0.027	-0.087	0.002	0.004	0.000
	1572	-0.679	-3.420	-0.099	0.070	-0.022	0.008	-0.099	0.006
	1615	-2.425	0.082	-0.110	0.043	0.193	-0.031	0.036	-0.087
	1620	-3.153	-3.133	-4.149	-0.051	-0.057	0.025	0.020	0.029
Roof EL13.8m	1867	1.500	1.282	-0.012	-0.783	-1.023	0.001	0.015	-0.006
	1872	1.774	1.355	0.412	-0.232	-0.745	0.032	-0.330	0.023
	1915	1.949	1.114	0.485	-0.695	-0.400	0.008	0.017	-0.146
	1920	-0.003	-0.164	0.493	-0.634	-0.644	-0.022	-0.011	0.005
Wall EL-7.4m ~EL-2.0m	6007	0.521	1.371	-0.057	0.642	0.904	0.004	-0.032	0.165
	4006	0.756	-0.069	0.091	-0.688	-1.068	-0.002	-0.001	-0.194
	4010	1.043	1.253	-0.324	-0.531	-0.881	-0.042	-0.156	-0.334
Wall EL-2.0m ~EL4.65m	6043	2.535	-1.168	-0.671	0.378	0.483	-0.026	0.127	0.061
	4036	2.463	-0.411	-0.013	-0.289	-0.300	0.001	0.031	0.070
	4040	1.381	1.392	-0.606	-0.080	-0.300	-0.047	-0.217	-0.181
Wall EL4.65m ~EL9.06m	6081	5.519	-0.786	0.338	1.391	1.000	0.007	-0.048	-0.161
	4066	6.358	-0.464	-0.042	-1.488	-1.021	0.000	-0.021	0.188
	4070	3.596	1.323	-1.489	-1.232	-1.167	-0.021	-0.332	-0.163
Wall EL9.06m ~EL13.8m	6117	3.560	-0.619	-1.500	0.908	1.500	-0.022	-0.038	0.385
	4096	3.980	-0.285	-0.182	-0.936	-1.566	-0.001	0.034	-0.463
	4100	2.844	1.752	-1.526	-0.681	-1.227	-0.002	-0.347	-0.594

Table 3G.2-9

Results of NASTRAN Analysis: Seismic Load (Horizontal: North to South Direction)

Location	Element ID	Nx (MN/m)	Ny (MN/m)	Nxy (MN/m)	Mx (MNm/m)	My (MNm/m)	Mxy (MNm/m)	Qx (MN/m)	Qy (MN/m)
Basemat EL-7.4m	67	-0.155	-0.143	0.233	-0.512	-0.370	-0.269	0.859	-0.028
	72	-0.182	-3.719	0.007	-2.010	-1.590	0.053	-1.588	0.017
	115	-0.170	-0.077	2.424	0.102	0.016	-2.587	1.271	-0.178
	120	0.089	-0.838	0.275	-0.843	-0.343	0.471	0.143	-0.893
Slab B1F EL-2.0m	567	0.031	-0.010	0.020	0.070	0.000	-0.014	0.023	-0.015
	572	0.279	0.227	-0.049	-0.007	-0.007	-0.001	-0.003	0.003
	615	-0.022	0.004	-0.302	0.041	0.001	0.010	0.039	0.009
	620	0.226	0.087	-0.196	-0.015	0.018	0.001	0.018	-0.021
Slab 1F EL4.65m	1067	0.030	-0.018	0.029	-0.005	-0.005	-0.003	0.008	-0.001
	1072	0.220	0.276	-0.047	0.017	-0.003	0.001	-0.012	0.001
	1115	0.018	-0.009	-0.262	-0.006	0.003	-0.004	0.002	-0.001
	1120	0.140	0.057	-0.076	-0.008	0.012	0.002	0.012	-0.014
Slab 2F EL9.06m	1567	0.029	-0.033	0.017	-0.005	-0.005	-0.003	0.010	0.000
	1572	0.160	0.325	-0.026	0.016	-0.003	0.001	-0.018	0.002
	1615	-0.326	-0.062	0.018	-0.011	0.002	-0.003	0.005	0.000
	1620	0.092	0.070	-0.097	-0.007	0.011	0.002	0.011	-0.012
Roof EL13.8m	1867	0.043	0.020	-0.008	-0.013	-0.012	-0.006	0.019	-0.001
	1872	0.339	0.742	0.021	0.030	-0.011	0.004	-0.033	0.003
	1915	0.097	0.019	-0.352	-0.009	0.005	-0.015	0.000	-0.002
	1920	0.131	0.164	0.003	-0.006	0.013	0.006	0.012	-0.011
Wall EL-7.4m ~EL-2.0m	6007	0.128	-0.241	2.677	-0.072	0.043	-0.015	-0.090	0.039
	4006	-0.916	-2.387	-0.034	0.015	0.064	-0.002	0.001	0.048
	4010	-0.184	-0.785	-0.807	0.043	0.042	-0.025	0.017	0.014
Wall EL-2.0m ~EL4.65m	6043	0.012	-0.043	1.834	-0.003	-0.015	0.012	0.006	-0.004
	4036	0.138	-1.780	-0.107	-0.025	-0.097	-0.001	-0.006	-0.027
	4040	0.035	-0.613	-1.095	0.003	-0.034	-0.013	-0.032	-0.033
Wall EL4.65m ~EL9.06m	6081	0.432	-0.260	1.027	0.005	0.030	-0.003	0.000	0.017
	4066	0.440	-0.799	-0.108	-0.006	0.012	0.001	-0.003	0.005
	4070	0.077	-0.425	-0.869	0.002	0.005	-0.001	-0.010	-0.005
Wall EL9.06m ~EL13.8m	6117	-0.267	0.067	0.567	0.000	0.006	0.001	-0.001	0.014
	4096	0.532	-0.335	-0.079	-0.008	-0.027	0.001	-0.002	-0.025
	4100	0.098	-0.254	-0.560	-0.002	-0.005	-0.002	-0.009	-0.007

Table 3G.2-10

Results of NASTRAN Analysis: Seismic Load (Horizontal: East to West Direction)

Location	Element ID	Nx (MN/m)	Ny (MN/m)	Nxy (MN/m)	Mx (MNm/m)	My (MNm/m)	Mxy (MNm/m)	Qx (MN/m)	Qy (MN/m)
Basemat EL-7.4m	67	-0.148	0.283	-0.555	-0.606	-2.018	-0.039	-0.694	2.653
	72	-0.033	0.005	2.068	-0.075	-0.214	-2.322	-0.154	0.942
	115	-3.312	-0.365	-0.115	-0.203	-0.850	-0.142	0.459	-0.754
	120	-0.807	0.212	0.188	-0.323	-0.775	0.190	-1.080	0.056
Slab B1F EL-2.0m	567	-0.010	-0.045	0.506	-0.029	-0.085	-0.019	-0.019	0.134
	572	0.012	0.011	0.297	0.002	0.000	-0.001	-0.001	-0.002
	615	-0.253	0.278	0.415	-0.008	-0.028	-0.001	0.002	0.016
	620	0.077	0.148	0.265	0.016	-0.020	-0.002	-0.023	0.022
Slab 1F EL4.65m	1067	0.005	0.021	-0.026	-0.002	-0.001	-0.002	-0.001	0.000
	1072	0.002	0.007	-0.282	0.001	0.000	-0.002	-0.001	-0.002
	1115	0.324	0.161	0.000	-0.014	-0.040	0.000	-0.002	0.015
	1120	0.057	0.121	-0.150	0.011	-0.019	0.000	-0.019	0.019
Slab 2F EL9.06m	1567	0.015	0.038	-0.040	-0.001	0.000	-0.001	0.000	0.000
	1572	0.004	0.004	-0.371	0.001	0.000	-0.002	-0.001	-0.001
	1615	0.728	0.223	0.036	-0.002	-0.015	0.001	0.005	0.005
	1620	0.082	0.118	-0.167	0.009	-0.013	-0.001	-0.015	0.014
Roof EL13.8m	1867	0.054	0.028	-0.056	-0.002	0.000	-0.001	0.000	0.002
	1872	0.005	-0.003	-0.478	0.001	0.000	-0.007	0.000	-0.004
	1915	1.145	0.271	-0.005	-0.009	-0.028	0.001	0.001	0.007
	1920	0.207	0.077	-0.038	0.008	-0.015	-0.004	-0.016	0.012
Wall EL-7.4m ~EL-2.0m	6007	-1.288	-1.359	0.050	-0.025	-0.006	-0.006	-0.007	0.031
	4006	0.066	-0.181	2.155	-0.009	-0.028	0.018	0.010	-0.011
	4010	0.213	-1.042	0.804	-0.043	-0.132	0.007	-0.048	-0.058
Wall EL-2.0m ~EL4.65m	6043	-0.618	-1.109	-0.069	-0.076	-0.155	0.010	-0.042	-0.073
	4036	0.025	-0.098	1.955	0.000	0.002	-0.006	-0.008	0.001
	4040	0.004	-0.933	1.376	-0.012	0.009	0.021	0.019	0.016
Wall EL4.65m ~EL9.06m	6081	0.289	-0.800	-0.370	0.016	0.064	0.014	0.008	0.006
	4066	0.005	-0.045	1.307	0.000	-0.001	0.006	0.001	-0.001
	4070	0.047	-0.307	1.041	0.019	-0.009	0.008	-0.007	-0.014
Wall EL9.06m ~EL13.8m	6117	0.652	-0.430	-0.426	0.005	0.001	0.000	0.002	-0.011
	4096	-0.005	-0.023	0.678	0.001	0.001	0.001	0.000	0.000
	4100	0.003	-0.173	0.559	0.012	-0.003	0.005	-0.001	-0.014

Table 3G.2-11

Results of NASTRAN Analysis: Seismic Load (Vertical: Upward Direction)

Location	Element ID	Nx (MN/m)	Ny (MN/m)	Nxy (MN/m)	Mx (MNm/m)	My (MNm/m)	Mxy (MNm/m)	Qx (MN/m)	Qy (MN/m)
Basemat EL-7.4m	67	-0.025	0.587	-0.021	1.029	0.870	-0.083	-0.109	0.123
	72	0.038	-0.081	-0.011	0.395	0.125	0.038	0.492	-0.028
	115	0.617	0.235	-0.259	0.218	0.194	0.298	0.027	0.579
	120	0.048	0.025	0.126	0.091	0.157	-0.539	0.038	0.038
Slab B1F EL-2.0m	567	-0.002	-0.605	0.036	0.044	0.017	0.006	0.057	-0.016
	572	-0.066	-0.103	0.010	0.020	0.012	-0.005	-0.073	0.004
	615	-0.148	-0.114	0.212	0.025	0.003	-0.019	0.031	0.002
	620	-0.037	-0.037	-0.051	0.017	0.017	0.020	-0.023	-0.026
Slab 1F EL4.65m	1067	-0.076	-0.042	0.003	-0.151	-0.056	0.010	-0.027	-0.022
	1072	0.002	-0.039	-0.001	0.036	0.009	0.000	-0.072	-0.004
	1115	-0.111	-0.031	-0.012	0.016	0.145	0.008	0.001	-0.134
	1120	-0.021	-0.017	-0.052	0.016	0.015	0.014	-0.017	-0.022
Slab 2F EL9.06m	1567	-0.038	-0.072	0.003	-0.092	-0.007	0.005	-0.018	-0.011
	1572	-0.025	-0.009	0.001	0.044	0.014	0.001	-0.078	0.000
	1615	-0.142	-0.125	0.018	0.010	0.141	0.007	-0.007	-0.148
	1620	-0.020	-0.016	-0.006	0.019	0.018	0.016	-0.020	-0.025
Roof EL13.8m	1867	0.112	0.089	-0.003	-0.231	-0.074	0.011	-0.034	-0.006
	1872	0.045	0.111	-0.005	0.040	0.024	-0.008	-0.086	-0.001
	1915	0.120	0.149	0.002	0.007	0.180	0.012	0.006	-0.205
	1920	0.024	0.053	-0.016	0.026	0.022	0.056	-0.024	-0.030
Wall EL-7.4m ~EL-2.0m	6007	0.216	0.666	0.192	0.011	-0.080	0.004	0.049	-0.060
	4006	-0.014	0.760	-0.017	0.027	0.146	-0.001	0.002	0.036
	4010	-0.057	0.200	0.094	-0.012	0.060	0.005	0.027	0.035
Wall EL-2.0m ~EL4.65m	6043	-0.145	1.165	0.250	-0.034	-0.023	-0.006	-0.036	-0.001
	4036	-0.053	0.576	0.002	-0.017	-0.090	0.001	0.002	-0.030
	4040	0.016	0.354	-0.041	0.004	-0.021	-0.010	-0.015	-0.016
Wall EL4.65m ~EL9.06m	6081	-0.002	0.648	-0.005	0.018	0.112	0.004	0.001	0.063
	4066	0.007	0.371	-0.006	-0.006	-0.033	0.002	0.003	-0.024
	4070	0.016	0.271	-0.087	0.002	-0.008	-0.001	-0.006	-0.008
Wall EL9.06m ~EL13.8m	6117	0.016	0.398	0.040	0.012	0.080	-0.005	-0.005	0.113
	4096	0.062	0.204	0.000	-0.008	-0.043	0.000	0.003	-0.055
	4100	0.002	0.116	-0.082	-0.005	-0.011	0.003	0.003	-0.014

Table 3G.2-12

Combined Forces and Moments: Selected Load Combination CB-3

Location	Element ID		Nx (MN/m)	Ny (MN/m)	Nxy (MN/m)	Mx (MNm/m)	My (MNm/m)	Mxy (MNm/m)	Qx (MN/m)	Qy (MN/m)
Basemat EL-7.4m	67	OTHR	-3.076	-3.299	-0.064	-1.214	-0.445	0.171	-0.029	-0.209
		TEMP	0.000	0.000	0.000	0.000	0.000	0.000	0.000	0.000
	72	OTHR	-3.988	-0.998	-0.061	3.228	1.110	-0.064	-0.756	-0.033
		TEMP	0.000	0.000	0.000	0.000	0.000	0.000	0.000	0.000
	115	OTHR	-3.867	-2.269	-0.933	-0.231	0.426	0.867	-0.626	-0.886
		TEMP	0.000	0.000	0.000	0.000	0.000	0.000	0.000	0.000
	120	OTHR	-3.044	-1.664	-0.173	1.430	0.607	-0.028	-0.555	-0.039
		TEMP	0.000	0.000	0.000	0.000	0.000	0.000	0.000	0.000
Slab B1F EL-2.0m	567	OTHR	-1.677	-0.332	0.009	-0.116	-0.035	-0.006	-0.138	0.041
		TEMP	0.000	0.000	0.000	0.000	0.000	0.000	0.000	0.000
	572	OTHR	-2.586	-1.024	0.182	-0.014	-0.020	0.013	0.156	-0.010
		TEMP	0.000	0.000	0.000	0.000	0.000	0.000	0.000	0.000
	615	OTHR	-0.867	-0.783	0.118	-0.069	-0.014	0.032	-0.078	0.010
		TEMP	0.000	0.000	0.000	0.000	0.000	0.000	0.000	0.000
	620	OTHR	-1.208	-0.600	1.568	-0.031	-0.054	-0.048	0.041	0.077
		TEMP	0.000	0.000	0.000	0.000	0.000	0.000	0.000	0.000
Slab 1F EL4.65m	1067	OTHR	-0.567	-0.133	-0.024	0.271	0.103	-0.017	0.045	0.035
		TEMP	0.000	0.000	0.000	0.000	0.000	0.000	0.000	0.000
	1072	OTHR	-1.227	-0.485	0.096	-0.190	-0.034	-0.004	0.189	0.007
		TEMP	0.000	0.000	0.000	0.000	0.000	0.000	0.000	0.000
	1115	OTHR	-0.354	-0.296	0.327	-0.034	-0.298	-0.010	0.001	0.261
		TEMP	0.000	0.000	0.000	0.000	0.000	0.000	0.000	0.000
	1120	OTHR	-0.445	-0.114	0.614	-0.059	-0.029	-0.010	0.054	0.031
		TEMP	0.000	0.000	0.000	0.000	0.000	0.000	0.000	0.000
Slab 2F EL9.06m	1567	OTHR	0.017	0.092	-0.028	0.140	0.010	-0.006	0.026	0.016
		TEMP	0.000	0.000	0.000	0.000	0.000	0.000	0.000	0.000
	1572	OTHR	0.140	-0.070	-0.022	-0.085	-0.023	-0.002	0.134	0.000
		TEMP	0.000	0.000	0.000	0.000	0.000	0.000	0.000	0.000
	1615	OTHR	0.022	0.199	-0.056	-0.016	-0.208	-0.010	0.011	0.224
		TEMP	0.000	0.000	0.000	0.000	0.000	0.000	0.000	0.000
	1620	OTHR	0.054	0.027	-0.135	-0.030	-0.028	-0.027	0.030	0.037
		TEMP	0.000	0.000	0.000	0.000	0.000	0.000	0.000	0.000
Roof EL13.8m	1867	OTHR	-0.111	-0.087	-0.006	0.220	0.103	-0.009	0.024	0.006
		TEMP	0.000	0.000	0.000	0.000	0.000	0.000	0.000	0.000
	1872	OTHR	-0.062	-0.136	-0.009	-0.084	-0.020	0.003	0.120	-0.002
		TEMP	0.000	0.000	0.000	0.000	0.000	0.000	0.000	0.000
	1915	OTHR	-0.110	-0.168	-0.028	-0.014	-0.205	-0.005	-0.004	0.207
		TEMP	0.000	0.000	0.000	0.000	0.000	0.000	0.000	0.000
	1920	OTHR	-0.010	-0.059	0.038	-0.028	-0.028	-0.062	0.019	0.026
		TEMP	0.000	0.000	0.000	0.000	0.000	0.000	0.000	0.000

OTHR: Loads other than thermal and seismic loads
TEMP: Thermal loads

Table 3G.2-12

Combined Forces and Moments: Selected Load Combination CB-3 (Continued)

Location	Element ID		Nx (MN/m)	Ny (MN/m)	Nxy (MN/m)	Mx (MNm/m)	My (MNm/m)	Mxy (MNm/m)	Qx (MN/m)	Qy (MN/m)
Wall EL-7.4m ~EL-2.0m	6007	OTHR	-1.370	-1.029	-1.442	0.093	0.134	0.050	0.104	0.321
		TEMP	0.000	0.000	0.000	0.000	0.000	0.000	0.000	0.000
	4006	OTHR	-0.630	-0.851	-0.047	-0.103	-0.605	0.002	-0.007	-1.197
		TEMP	0.000	0.000	0.000	0.000	0.000	0.000	0.000	0.000
	4010	OTHR	-0.498	-0.704	-0.037	-0.112	-0.242	0.133	0.136	-0.504
		TEMP	0.000	0.000	0.000	0.000	0.000	0.000	0.000	0.000
Wall EL-2.0m ~EL4.65m	6043	OTHR	-0.954	-1.472	-0.807	0.061	0.054	-0.019	0.064	0.359
		TEMP	0.000	0.000	0.000	0.000	0.000	0.000	0.000	0.000
	4036	OTHR	-1.175	-0.429	0.058	0.043	0.103	-0.007	0.037	-0.967
		TEMP	0.000	0.000	0.000	0.000	0.000	0.000	0.000	0.000
	4040	OTHR	-0.680	-1.387	0.649	-0.180	-0.008	0.168	0.356	-0.283
		TEMP	0.000	0.000	0.000	0.000	0.000	0.000	0.000	0.000
Wall EL4.65m ~EL9.06m	6081	OTHR	-0.538	-0.813	0.197	0.005	0.007	0.001	-0.001	-0.057
		TEMP	0.000	0.000	0.000	0.000	0.000	0.000	0.000	0.000
	4066	OTHR	-0.674	-0.365	0.092	-0.073	-0.509	-0.013	0.015	-0.096
		TEMP	0.000	0.000	0.000	0.000	0.000	0.000	0.000	0.000
	4070	OTHR	-0.153	-0.624	0.418	-0.041	-0.153	-0.125	0.005	-0.081
		TEMP	0.000	0.000	0.000	0.000	0.000	0.000	0.000	0.000
Wall EL9.06m ~EL13.8m	6117	OTHR	-0.097	-0.482	0.023	-0.020	-0.128	0.004	0.007	-0.141
		TEMP	0.000	0.000	0.000	0.000	0.000	0.000	0.000	0.000
	4096	OTHR	-0.220	-0.261	0.031	0.009	0.057	-0.002	-0.009	0.082
		TEMP	0.000	0.000	0.000	0.000	0.000	0.000	0.000	0.000
	4100	OTHR	0.000	-0.080	0.083	0.008	0.006	-0.001	-0.011	0.011
		TEMP	0.000	0.000	0.000	0.000	0.000	0.000	0.000	0.000

Table 3G.2-13

Combined Forces and Moments: Selected Load Combination CB-4

Location	Element ID		Nx (MN/m)	Ny (MN/m)	Nxy (MN/m)	Mx (MNm/m)	My (MNm/m)	Mxy (MNm/m)	Qx (MN/m)	Qy (MN/m)
Basemat EL-7.4m	67	OTHR	-2.353	-2.508	-0.049	-0.908	-0.318	0.129	-0.026	-0.156
		TEMP	0.245	0.128	0.024	1.598	1.437	-0.003	-0.013	0.008
	72	OTHR	-3.049	-0.765	-0.047	2.478	0.853	-0.048	-0.565	-0.026
		TEMP	0.067	0.300	0.066	0.289	1.406	-0.040	0.110	0.095
	115	OTHR	-2.942	-1.729	-0.720	-0.172	0.330	0.671	-0.478	-0.664
		TEMP	1.046	0.058	0.132	1.780	0.464	-0.083	0.263	0.175
	120	OTHR	-2.327	-1.272	-0.129	1.096	0.468	-0.035	-0.424	-0.029
		TEMP	-0.179	-0.321	0.371	0.667	0.679	-0.063	0.490	0.334
Slab B1F EL-2.0m	567	OTHR	-1.282	-0.269	0.008	-0.087	-0.027	-0.004	-0.104	0.031
		TEMP	-0.230	0.032	0.005	-0.007	-0.004	0.000	-0.004	0.002
	572	OTHR	-1.980	-0.786	0.139	-0.010	-0.015	0.009	0.117	-0.008
		TEMP	0.093	-0.254	-0.026	-0.017	0.001	0.000	0.007	0.000
	615	OTHR	-0.666	-0.601	0.095	-0.052	-0.010	0.024	-0.059	0.007
		TEMP	-0.428	0.121	-0.119	-0.001	0.000	0.001	-0.007	-0.012
	620	OTHR	-0.924	-0.460	1.198	-0.023	-0.041	-0.036	0.031	0.058
		TEMP	-0.347	-0.334	-0.506	-0.010	-0.007	0.006	0.006	0.001
Slab 1F EL4.65m	1067	OTHR	-0.435	-0.102	-0.018	0.204	0.077	-0.013	0.034	0.026
		TEMP	-1.179	-0.492	-0.005	0.003	-0.015	0.000	0.002	-0.001
	1072	OTHR	-0.938	-0.372	0.073	-0.145	-0.026	-0.003	0.143	0.005
		TEMP	-0.153	-1.626	-0.081	0.100	0.016	0.005	-0.045	-0.002
	1115	OTHR	-0.273	-0.226	0.250	-0.026	-0.225	-0.008	0.001	0.197
		TEMP	-1.366	0.033	-0.042	-0.004	0.028	0.003	-0.010	-0.005
	1120	OTHR	-0.340	-0.087	0.468	-0.045	-0.022	-0.008	0.041	0.023
		TEMP	-1.745	-1.712	-2.181	0.088	0.086	-0.008	-0.041	-0.038
Slab 2F EL9.06m	1567	OTHR	0.013	0.069	-0.021	0.105	0.008	-0.005	0.019	0.012
		TEMP	-2.057	-0.795	0.007	-0.039	-0.083	0.001	0.003	0.000
	1572	OTHR	0.107	-0.054	-0.017	-0.064	-0.017	-0.002	0.101	0.000
		TEMP	-0.490	-2.745	-0.073	0.027	-0.039	0.005	-0.070	0.005
	1615	OTHR	0.014	0.150	-0.042	-0.012	-0.157	-0.008	0.008	0.169
		TEMP	-1.573	0.168	-0.018	0.019	0.137	-0.025	0.031	-0.069
	1620	OTHR	0.041	0.021	-0.104	-0.023	-0.021	-0.020	0.023	0.028
		TEMP	-2.781	-2.761	-3.520	-0.067	-0.073	0.022	0.020	0.029
Roof EL13.8m	1867	OTHR	-0.084	-0.065	-0.005	0.165	0.078	-0.006	0.018	0.004
		TEMP	1.083	0.974	-0.007	-0.620	-0.784	0.001	0.011	-0.004
	1872	OTHR	-0.047	-0.102	-0.007	-0.064	-0.015	0.002	0.090	-0.001
		TEMP	1.288	0.870	0.299	-0.226	-0.592	0.022	-0.235	0.017
	1915	OTHR	-0.083	-0.126	-0.021	-0.010	-0.154	-0.004	-0.003	0.156
		TEMP	1.560	0.814	0.362	-0.557	-0.354	0.007	0.014	-0.103
	1920	OTHR	-0.007	-0.045	0.029	-0.021	-0.021	-0.047	0.014	0.020
		TEMP	-0.018	-0.182	0.316	-0.520	-0.530	-0.022	-0.009	0.007

Table 3G.2-13

Combined Forces and Moments: Selected Load Combination CB-4 (Continued)

Location	Element ID		Nx (MN/m)	Ny (MN/m)	Nxy (MN/m)	Mx (MNm/m)	My (MNm/m)	Mxy (MNm/m)	Qx (MN/m)	Qy (MN/m)
Wall EL-7.4m ~EL-2.0m	6007	OTHR	-1.042	-0.772	-1.098	0.071	0.100	0.038	0.081	0.244
		TEMP	0.343	0.087	0.124	0.139	0.187	0.000	-0.006	0.045
	4006	OTHR	-0.482	-0.632	-0.036	-0.078	-0.459	0.001	-0.005	-0.914
		TEMP	0.359	-0.212	0.108	-0.134	-0.142	0.000	-0.001	-0.023
	4010	OTHR	-0.382	-0.534	-0.026	-0.086	-0.183	0.102	0.105	-0.384
		TEMP	0.173	0.673	0.175	-0.115	-0.131	-0.010	-0.005	-0.031
Wall EL-2.0m ~EL4.65m	6043	OTHR	-0.733	-1.099	-0.611	0.046	0.040	-0.015	0.048	0.275
		TEMP	-0.258	-0.852	-0.163	0.134	0.145	-0.008	0.011	-0.063
	4036	OTHR	-0.900	-0.315	0.045	0.033	0.076	-0.005	0.028	-0.740
		TEMP	0.077	-0.838	0.043	-0.138	-0.138	0.000	0.002	0.114
	4040	OTHR	-0.519	-1.053	0.496	-0.137	-0.007	0.128	0.272	-0.217
		TEMP	0.340	2.135	0.158	-0.047	-0.159	-0.042	-0.097	-0.035
Wall EL4.65m ~EL9.06m	6081	OTHR	-0.412	-0.610	0.151	0.004	0.008	0.001	-0.001	-0.042
		TEMP	6.548	-1.010	0.131	1.243	0.955	0.018	-0.056	-0.077
	4066	OTHR	-0.515	-0.272	0.070	-0.056	-0.389	-0.010	0.011	-0.074
		TEMP	7.531	-0.836	-0.102	-1.322	-0.952	-0.001	0.000	0.110
	4070	OTHR	-0.116	-0.471	0.317	-0.031	-0.117	-0.096	0.004	-0.062
		TEMP	4.742	1.668	-2.190	-1.087	-0.988	-0.027	-0.303	-0.234
Wall EL9.06m ~EL13.8m	6117	OTHR	-0.074	-0.362	0.019	-0.015	-0.097	0.003	0.005	-0.106
		TEMP	3.689	-0.604	-1.506	0.729	1.178	-0.018	-0.029	0.288
	4096	OTHR	-0.167	-0.196	0.024	0.007	0.043	-0.002	-0.007	0.062
		TEMP	4.099	-0.340	-0.173	-0.751	-1.226	0.000	0.023	-0.344
	4100	OTHR	0.000	-0.059	0.062	0.006	0.005	-0.001	-0.008	0.008
		TEMP	2.630	1.287	-1.234	-0.554	-0.993	-0.004	-0.282	-0.506

Table 3G.2-14

Combined Forces and Moments: Selected Load Combination CB-7

Location	Element ID		Nx (MN/m)	Ny (MN/m)	Nxy (MN/m)	Mx (MNm/m)	My (MNm/m)	Mxy (MNm/m)	Qx (MN/m)	Qy (MN/m)
Basemat EL-7.4m	67	OTHR	-1.808	-2.051	-0.030	-0.844	-0.436	0.109	0.033	-0.149
		TEMP	0.189	0.099	0.018	1.230	1.105	-0.002	-0.010	0.006
	72	OTHR	-2.357	-0.633	-0.035	1.804	0.589	-0.038	-0.565	-0.014
		TEMP	0.052	0.231	0.051	0.223	1.082	-0.031	0.085	0.073
	115	OTHR	-2.387	-1.376	-0.471	-0.164	0.221	0.417	-0.356	-0.619
		TEMP	0.804	0.045	0.101	1.369	0.357	-0.064	0.202	0.135
	120	OTHR	-1.798	-0.994	-0.125	0.815	0.329	0.097	-0.328	-0.035
		TEMP	-0.138	-0.247	0.285	0.513	0.522	-0.049	0.377	0.257
Slab B1F EL-2.0m	567	OTHR	-0.986	-0.084	-0.001	-0.074	-0.025	-0.005	-0.094	0.028
		TEMP	-0.177	0.025	0.004	-0.005	-0.003	0.000	-0.003	0.002
	572	OTHR	-1.509	-0.582	0.106	-0.011	-0.015	0.009	0.109	-0.007
		TEMP	0.071	-0.195	-0.020	-0.013	0.001	0.000	0.005	0.000
	615	OTHR	-0.485	-0.442	0.032	-0.046	-0.010	0.024	-0.053	0.007
		TEMP	-0.329	0.093	-0.091	-0.001	0.000	0.001	-0.005	-0.009
	620	OTHR	-0.704	-0.346	0.932	-0.022	-0.036	-0.033	0.031	0.052
		TEMP	-0.267	-0.257	-0.389	-0.008	-0.005	0.004	0.005	0.001
Slab 1F EL4.65m	1067	OTHR	-0.325	-0.066	-0.014	0.189	0.070	-0.012	0.032	0.025
		TEMP	-0.907	-0.378	-0.004	0.003	-0.012	0.000	0.002	-0.001
	1072	OTHR	-0.720	-0.271	0.055	-0.115	-0.022	-0.002	0.123	0.005
		TEMP	-0.118	-1.251	-0.062	0.077	0.013	0.004	-0.035	-0.001
	1115	OTHR	-0.193	-0.164	0.188	-0.023	-0.202	-0.008	0.001	0.179
		TEMP	-1.051	0.025	-0.032	-0.003	0.021	0.002	-0.008	-0.004
	1120	OTHR	-0.256	-0.060	0.361	-0.038	-0.019	-0.008	0.035	0.023
		TEMP	-1.342	-1.317	-1.678	0.068	0.066	-0.006	-0.032	-0.030
Slab 2F EL9.06m	1567	OTHR	-0.001	0.069	-0.016	0.097	0.005	-0.004	0.018	0.011
		TEMP	-1.582	-0.611	0.005	-0.030	-0.064	0.001	0.002	0.000
	1572	OTHR	0.092	-0.030	-0.015	-0.051	-0.016	-0.001	0.086	0.000
		TEMP	-0.377	-2.111	-0.056	0.021	-0.030	0.004	-0.054	0.003
	1615	OTHR	0.020	0.138	-0.044	-0.011	-0.139	-0.008	0.007	0.153
		TEMP	-1.210	0.130	-0.014	0.015	0.105	-0.019	0.024	-0.053
	1620	OTHR	0.037	0.025	-0.088	-0.020	-0.019	-0.018	0.021	0.025
		TEMP	-2.139	-2.124	-2.708	-0.051	-0.056	0.017	0.015	0.022
Roof EL13.8m	1867	OTHR	-0.071	-0.041	-0.003	0.120	0.060	-0.005	0.013	0.003
		TEMP	0.833	0.750	-0.005	-0.477	-0.603	0.001	0.008	-0.003
	1872	OTHR	-0.032	-0.070	-0.004	-0.050	-0.010	0.001	0.070	-0.001
		TEMP	0.990	0.669	0.230	-0.174	-0.455	0.017	-0.181	0.013
	1915	OTHR	-0.063	-0.094	-0.024	-0.008	-0.117	-0.002	-0.002	0.115
		TEMP	1.200	0.626	0.278	-0.429	-0.272	0.005	0.011	-0.079
	1920	OTHR	-0.002	-0.030	0.022	-0.015	-0.016	-0.036	0.011	0.015
		TEMP	-0.014	-0.140	0.243	-0.400	-0.408	-0.017	-0.007	0.005

Table 3G.2-14

Combined Forces and Moments: Selected Load Combination CB-7 (Continued)

Location	Element ID		Nx (MN/m)	Ny (MN/m)	Nxy (MN/m)	Mx (MNm/m)	My (MNm/m)	Mxy (MNm/m)	Qx (MN/m)	Qy (MN/m)
Wall EL-7.4m ~EL-2.0m	6007	OTHR	-0.845	-0.717	-0.846	0.051	0.094	0.028	0.051	0.200
		TEMP	0.264	0.067	0.095	0.107	0.144	0.000	-0.005	0.034
	4006	OTHR	-0.378	-0.673	-0.027	-0.067	-0.387	0.001	-0.004	-0.711
		TEMP	0.276	-0.163	0.083	-0.103	-0.109	0.000	-0.001	-0.018
	4010	OTHR	-0.285	-0.453	-0.052	-0.062	-0.153	0.077	0.075	-0.303
		TEMP	0.133	0.518	0.135	-0.088	-0.101	-0.007	-0.004	-0.024
Wall EL-2.0m ~EL4.65m	6043	OTHR	-0.536	-1.046	-0.483	0.042	0.034	-0.010	0.044	0.212
		TEMP	-0.199	-0.655	-0.125	0.103	0.111	-0.006	0.009	-0.048
	4036	OTHR	-0.677	-0.360	0.032	0.029	0.080	-0.004	0.021	-0.563
		TEMP	0.059	-0.645	0.033	-0.106	-0.106	0.000	0.001	0.088
	4040	OTHR	-0.403	-0.877	0.373	-0.107	0.000	0.101	0.212	-0.163
		TEMP	0.262	1.642	0.122	-0.036	-0.123	-0.033	-0.075	-0.027
Wall EL4.65m ~EL9.06m	6081	OTHR	-0.305	-0.544	0.126	0.001	-0.013	0.000	0.000	-0.052
		TEMP	5.037	-0.777	0.101	0.957	0.735	0.014	-0.043	-0.060
	4066	OTHR	-0.381	-0.262	0.053	-0.043	-0.298	-0.008	0.008	-0.050
		TEMP	5.793	-0.643	-0.079	-1.017	-0.732	-0.001	0.000	0.085
	4070	OTHR	-0.085	-0.401	0.246	-0.023	-0.089	-0.074	0.002	-0.045
		TEMP	3.647	1.283	-1.685	-0.836	-0.760	-0.021	-0.233	-0.180
Wall EL9.06m ~EL13.8m	6117	OTHR	-0.058	-0.297	0.011	-0.013	-0.083	0.002	0.005	-0.089
		TEMP	2.838	-0.465	-1.159	0.560	0.906	-0.014	-0.022	0.222
	4096	OTHR	-0.118	-0.166	0.017	0.006	0.037	-0.001	-0.005	0.053
		TEMP	3.153	-0.262	-0.133	-0.578	-0.943	0.000	0.018	-0.265
	4100	OTHR	0.005	-0.056	0.047	0.005	0.005	0.000	-0.007	0.008
		TEMP	2.023	0.990	-0.949	-0.426	-0.764	-0.003	-0.217	-0.390

Table 3G.2-15

Combined Forces and Moments: Selected Load Combination CB-9

Location	Element ID		Nx (MN/m)	Ny (MN/m)	Nxy (MN/m)	Mx (MNm/m)	My (MNm/m)	Mxy (MNm/m)	Qx (MN/m)	Qy (MN/m)
Basemat EL-7.4m	67	OTHR	-1.803	-2.073	-0.034	-0.908	-0.459	0.120	0.010	-0.152
		TEMP	-0.409	-1.291	0.169	6.783	6.419	-0.132	0.291	-0.113
		SEIS	0.216	0.667	0.611	1.621	2.914	0.310	1.266	2.739
	72	OTHR	-2.353	-0.545	-0.033	1.822	0.627	-0.044	-0.549	-0.012
		TEMP	-0.189	-0.279	0.059	1.916	5.868	-0.007	0.290	0.127
		SEIS	0.188	3.720	2.076	2.945	1.836	2.333	1.788	0.968
	115	OTHR	-2.411	-1.386	-0.507	-0.180	0.209	0.459	-0.382	-0.646
		TEMP	-0.198	-0.082	0.185	6.662	2.336	-0.255	0.533	0.941
		SEIS	3.373	0.441	2.448	0.412	1.284	2.666	1.372	0.988
	120	OTHR	-1.802	-0.979	-0.132	0.826	0.326	0.105	-0.334	-0.022
		TEMP	-0.949	-1.034	-0.271	3.316	3.332	1.777	1.350	1.269
		SEIS	0.816	0.866	0.356	1.269	1.199	0.883	1.160	0.929
Slab B1F EL-2.0m	567	OTHR	-0.988	-0.058	-0.003	-0.078	-0.025	-0.005	-0.095	0.028
		TEMP	-0.720	0.380	0.045	-0.078	-0.091	0.002	-0.003	0.006
		SEIS	0.033	0.607	0.508	0.089	0.087	0.025	0.064	0.142
	572	OTHR	-1.507	-0.581	0.105	-0.012	-0.015	0.009	0.110	-0.007
		TEMP	0.331	-0.756	-0.056	-0.030	-0.063	0.003	-0.023	0.000
		SEIS	0.287	0.250	0.301	0.049	0.017	0.006	0.075	0.006
	615	OTHR	-0.478	-0.436	0.021	-0.047	-0.009	0.024	-0.054	0.006
		TEMP	-0.858	0.641	-0.723	-0.078	-0.033	0.006	-0.032	-0.073
		SEIS	0.294	0.301	0.555	0.050	0.066	0.022	0.053	0.055
	620	OTHR	-0.703	-0.345	0.932	-0.022	-0.036	-0.034	0.030	0.052
		TEMP	-0.970	-0.965	-1.402	-0.066	-0.065	0.009	0.007	0.005
		SEIS	0.241	0.176	0.334	0.035	0.039	0.021	0.045	0.048
Slab 1F EL4.65m	1067	OTHR	-0.319	-0.076	-0.015	0.189	0.071	-0.012	0.032	0.025
		TEMP	-1.315	-0.447	-0.012	0.062	0.026	0.001	0.003	-0.003
		SEIS	0.081	0.051	0.040	0.151	0.059	0.011	0.028	0.022
	1072	OTHR	-0.727	-0.284	0.058	-0.117	-0.022	-0.002	0.124	0.005
		TEMP	-0.170	-1.780	-0.097	0.184	0.081	0.007	-0.061	-0.001
		SEIS	0.220	0.278	0.286	0.088	0.015	0.004	0.083	0.005
	1115	OTHR	-0.187	-0.177	0.197	-0.023	-0.202	-0.008	0.001	0.179
		TEMP	-1.419	0.046	0.018	0.065	0.113	0.002	-0.008	-0.017
		SEIS	0.343	0.164	0.262	0.031	0.175	0.009	0.004	0.139
	1120	OTHR	-0.260	-0.067	0.376	-0.038	-0.020	-0.009	0.035	0.023
		TEMP	-1.987	-1.963	-2.417	0.130	0.129	-0.007	-0.033	-0.031
		SEIS	0.152	0.135	0.176	0.036	0.043	0.018	0.045	0.049

OTHR: Loads other than thermal and seismic loads
TEMP: Thermal loads
SEIS: Seismic Loads

Table 3G.2-15

Combined Forces and Moments: Selected Load Combination CB-9 (Continued)

Location	Element ID		Nx (MN/m)	Ny (MN/m)	Nxy (MN/m)	Mx (MNm/m)	My (MNm/m)	Mxy (MNm/m)	Qx (MN/m)	Qy (MN/m)
Slab 2F EL9.06m	1567	OTHR	0.018	0.062	-0.017	0.097	0.007	-0.004	0.018	0.011
		TEMP	-2.552	-1.076	0.015	-0.027	-0.087	0.002	0.004	0.000
		SEIS	0.050	0.088	0.044	0.092	0.009	0.006	0.021	0.011
	1572	OTHR	0.081	-0.049	-0.011	-0.057	-0.016	-0.001	0.091	0.000
		TEMP	-0.679	-3.420	-0.099	0.070	-0.022	0.008	-0.099	0.006
		SEIS	0.162	0.325	0.372	0.049	0.015	0.003	0.081	0.002
	1615	OTHR	0.045	0.136	-0.034	-0.011	-0.145	-0.007	0.008	0.155
		TEMP	-2.425	0.082	-0.110	0.043	0.193	-0.031	0.036	-0.087
		SEIS	0.810	0.263	0.045	0.016	0.142	0.008	0.010	0.148
	1620	OTHR	0.033	0.014	-0.070	-0.021	-0.020	-0.018	0.021	0.026
		TEMP	-3.153	-3.133	-4.149	-0.051	-0.057	0.025	0.020	0.029
		SEIS	0.125	0.138	0.193	0.023	0.026	0.016	0.028	0.032
Roof EL13.8m	1867	OTHR	-0.084	-0.071	-0.003	0.173	0.074	-0.007	0.021	0.005
		TEMP	1.500	1.282	-0.012	-0.783	-1.023	0.001	0.015	-0.006
		SEIS	0.131	0.096	0.058	0.231	0.076	0.013	0.039	0.006
	1872	OTHR	-0.047	-0.113	-0.005	-0.057	-0.016	0.003	0.086	-0.001
		TEMP	1.774	1.355	0.412	-0.232	-0.745	0.032	-0.330	0.023
		SEIS	0.342	0.751	0.479	0.052	0.027	0.012	0.093	0.005
	1915	OTHR	-0.085	-0.129	-0.012	-0.009	-0.154	-0.005	-0.004	0.160
		TEMP	1.949	1.114	0.485	-0.695	-0.400	0.008	0.017	-0.146
		SEIS	1.155	0.310	0.353	0.016	0.183	0.019	0.006	0.205
	1920	OTHR	-0.011	-0.049	0.026	-0.022	-0.021	-0.046	0.015	0.021
		TEMP	-0.003	-0.164	0.493	-0.634	-0.644	-0.022	-0.011	0.005
		SEIS	0.247	0.189	0.042	0.028	0.030	0.057	0.032	0.034

Table 3G.2-15

Combined Forces and Moments: Selected Load Combination CB-9 (Continued)

Location	Element ID		Nx (MN/m)	Ny (MN/m)	Nxy (MN/m)	Mx (MNm/m)	My (MNm/m)	Mxy (MNm/m)	Qx (MN/m)	Qy (MN/m)
Wall EL-7.4m ~EL-2.0m	6007	OTHR	-0.856	-0.748	-0.908	0.052	0.097	0.029	0.051	0.202
		TEMP	0.521	1.371	-0.057	0.642	0.904	0.004	-0.032	0.165
		SEIS	1.441	1.597	2.697	0.095	0.107	0.032	0.122	0.156
	4006	OTHR	-0.359	-0.658	-0.024	-0.067	-0.390	0.001	-0.004	-0.712
		TEMP	0.756	-0.069	0.091	-0.688	-1.068	-0.002	-0.001	-0.194
		SEIS	1.098	2.592	2.174	0.050	0.262	0.019	0.011	0.343
	4010	OTHR	-0.278	-0.450	-0.037	-0.063	-0.156	0.077	0.074	-0.304
		TEMP	1.043	1.253	-0.324	-0.531	-0.881	-0.042	-0.156	-0.334
		SEIS	0.498	1.401	1.234	0.097	0.181	0.072	0.098	0.164
Wall EL-2.0m ~EL4.65m	6043	OTHR	-0.529	-1.111	-0.549	0.044	0.037	-0.010	0.046	0.212
		TEMP	2.535	-1.168	-0.671	0.378	0.483	-0.026	0.127	0.061
		SEIS	0.905	1.691	1.927	0.109	0.189	0.031	0.097	0.615
	4036	OTHR	-0.679	-0.361	0.034	0.029	0.082	-0.004	0.021	-0.562
		TEMP	2.463	-0.411	-0.013	-0.289	-0.300	0.001	0.031	0.070
		SEIS	0.653	1.919	1.969	0.036	0.137	0.008	0.026	0.542
	4040	OTHR	-0.403	-0.880	0.399	-0.107	0.000	0.101	0.213	-0.163
		TEMP	1.381	1.392	-0.606	-0.080	-0.300	-0.047	-0.217	-0.181
		SEIS	0.399	1.411	1.808	0.130	0.056	0.123	0.182	0.196
Wall EL4.65m ~EL9.06m	6081	OTHR	-0.321	-0.600	0.102	0.000	-0.018	-0.001	-0.001	-0.041
		TEMP	5.519	-0.786	0.338	1.391	1.000	0.007	-0.048	-0.161
		SEIS	0.826	1.100	1.211	0.066	0.406	0.032	0.022	0.112
	4066	OTHR	-0.407	-0.280	0.056	-0.042	-0.294	-0.008	0.008	-0.055
		TEMP	6.358	-0.464	-0.042	-1.488	-1.021	0.000	-0.021	0.188
		SEIS	0.632	0.898	1.331	0.058	0.328	0.010	0.016	0.089
	4070	OTHR	-0.097	-0.419	0.271	-0.025	-0.089	-0.073	0.005	-0.047
		TEMP	3.596	1.323	-1.489	-1.232	-1.167	-0.021	-0.332	-0.163
		SEIS	0.153	0.669	1.509	0.041	0.101	0.085	0.022	0.064
Wall EL9.06m ~EL13.8m	6117	OTHR	-0.057	-0.362	0.001	-0.013	-0.087	0.004	0.005	-0.100
		TEMP	3.560	-0.619	-1.500	0.908	1.500	-0.022	-0.038	0.385
		SEIS	0.749	0.605	0.767	0.013	0.082	0.006	0.006	0.115
	4096	OTHR	-0.154	-0.190	0.020	0.007	0.041	-0.001	-0.005	0.055
		TEMP	3.980	-0.285	-0.182	-0.936	-1.566	-0.001	0.034	-0.463
		SEIS	0.563	0.406	0.687	0.014	0.059	0.002	0.005	0.062
	4100	OTHR	-0.005	-0.072	0.071	0.005	0.006	-0.001	-0.006	0.008
		TEMP	2.844	1.752	-1.526	-0.681	-1.227	-0.002	-0.347	-0.594
		SEIS	0.112	0.380	0.846	0.015	0.016	0.008	0.015	0.023

Table 3G.2-16

Sectional Thicknesses and Rebar Ratios Used in the Evaluation

Location	Element ID	Thickness (m)	Primary Reinforcement					Shear Tie	
			Position	Direction 1 *1		Direction 2 *1			
				Arrangement	Ratio (%)	Arrangement	Ratio (%)	Arrangement	Ratio (%)
Basemat EL-7.4	67 72	3.0	Top	2-#11@200	0.335	2-#11@200	0.335	#6@400x400	0.177
			Bottom	2-#11@200	0.335	2-#11@200	0.335		
	115 120	3.0	Top	2-#11@200	0.335	2-#11@200	0.335	#6@400x400	0.177
			Bottom	2-#11@200	0.335	2-#11@200	0.335		
Slab B1F EL-2.0	567	0.5	Top	1-#11@200	1.006	1-#11@200	1.006	-	-
			Bottom	1-#11@200	1.006	1-#11@200	1.006		
	572 615 620		Top	1-#11@200	1.006	1-#11@200	1.006	-	-
			Bottom	1-#11@200	1.006	1-#11@200	1.006		
Slab 1F EL4.65	1067 1072 1115 1120	0.5	Top	1-#11@200	1.006	1-#11@200	1.006	-	-
			Bottom	1-#11@200	1.006	1-#11@200	1.006		
Slab 2F EL9.06m	1567 1572 1620	0.5	Top	1-#11@200	1.006	1-#11@200	1.006	-	-
			Bottom	1-#11@200	1.006	1-#11@200	1.006		
	1615		Top	1-#11@200	1.006	1-#11@200	1.006	#4@400x400	0.081
			Bottom	1-#11@200	1.006	1-#11@200	1.006		
Roof EL13.8m	1867 1872 1915 1920	0.7	Top	1-#11@200 + 1-#11@400	1.078	1-#11@200 + 1-#11@400	1.078	-	-
			Bottom	1-#11@200 + 1-#11@400	1.078	1-#11@200 + 1-#11@400	1.078		

Note *1: Wall Direction 1: Horizontal Direction 2: Vertical
Basemat, Slab, Roof Direction 1: N-S Direction 2: E-W

Table 3G.2-16

Sectional Thicknesses and Rebar Ratios Used in the Evaluation (Continued)

Location	Element ID	Thickness (m)	Primary Reinforcement					Shear Tie	
			Position	Direction 1 *1		Direction 2 *1			
				Arrangement	Ratio (%)	Arrangement	Ratio (%)	Arrangement	Ratio (%)
Wall EL-7.4m ~EL-2.0m	6007	0.9	Inside	2-#11@200	1.118	2-#11@200	1.118	#6@200x400	0.355
			Outside	2-#11@200	1.118	2-#11@200	1.118		
	4006 4010	0.9	Inside	2-#11@200	1.118	2-#11@200	1.118	#6@200x400	0.355
			Outside	2-#11@200	1.118	2-#11@200	1.118		
Wall EL-2.0m ~EL4.65m	6043 4040	0.9	Inside	2-#11@200	1.118	2-#11@200	1.118	#6@200x400	0.355
			Outside	2-#11@200	1.118	2-#11@200	1.118		
	4036	0.9	Inside	2-#11@200	1.118	2-#11@200	1.118	#6@200x200	0.710
			Outside	2-#11@200	1.118	2-#11@200	1.118		
Wall EL4.65m ~EL9.06m	6081 4066 4070	0.9	Inside	2-#11@200	1.118	2-#11@200	1.118	-	-
			Outside	2-#11@200	1.118	2-#11@200	1.118		
Wall EL9.06m ~EL13.8m	6117	0.7	Inside	1-#11@200	0.719	1-#11@200	0.719	-	-
			Outside	1-#11@200 + 1-#11@400	1.078	1-#11@200 + 1-#11@400	1.078		
	4096 4100	0.7	Inside	1-#11@200	0.719	1-#11@200	0.719	-	-
			Outside	1-#11@200 + 1-#11@400	1.078	1-#11@200 + 1-#11@400	1.078		

Note *1: Wall Direction 1: Horizontal Direction 2: Vertical
Basemat, Slab, Roof Direction 1: N-S Direction 2: E-W

Table 3G.2-17

Rebar and Concrete Stresses (Basemat and Slabs): Selected Load Combination CB-3

Location	Element ID	Concrete Stress (MPa)		Primary Reinforcement Stress (MPa)				
		Calculated	Allowable	Calculated				Allowable
				X-direction		Y-direction		
				Top	Bottom	Top	Bottom	
Basemat EL-7.4m	67	-1.7	-20.7	-1.7	-10.9	-6.0	-8.2	372.2
	72	-3.4		-23.3	5.2	-4.7	6.2	
	115	-1.9		-7.6	-10.1	-6.1	-2.3	
	120	-1.8		-12.5	-1.9	-4.6	-1.4	
Slab B1F EL-2.0m	567	-5.5	-25.9	-12.7	-28.1	0.8	-2.7	372.2
	572	-5.0		-29.7	-31.3	-6.3	-9.7	
	615	-3.6		-4.7	-14.1	-7.9	-8.5	
	620	-8.4		110.2	19.1	141.0	20.1	
Slab 1F EL4.65m	1067	-13.9	-25.9	-10.8	112.6	-2.4	46.4	372.2
	1072	-7.6		10.8	-27.5	-1.4	-4.3	
	1115	-11.9		37.1	8.4	155.5	-28.0	
	1120	-4.4		64.2	6.2	70.1	14.6	
Slab 2F EL9.06m	1567	-7.4	-25.9	4.1	90.5	7.2	24.8	372.2
	1572	-4.4		67.9	8.1	7.4	-0.7	
	1615	-7.5		14.0	6.0	133.3	-11.6	
	1620	-3.3		22.9	14.1	17.7	16.2	
Roof EL13.8m	1867	-5.6	-25.9	0.2	56.3	-2.2	20.9	372.2
	1872	-2.1		20.8	-0.9	-0.2	-1.3	
	1915	-4.1		-0.5	0.0	45.0	-9.8	
	1920	-2.9		25.2	5.9	23.5	1.1	

Note: Negative value means compression.

Table 3G.2-18

Rebar and Concrete Stresses (Walls): Selected Load Combination CB-3

Location	Element ID	Concrete Stress (MPa)		Primary Reinforcement Stress (MPa)				
		Calculated	Allowable	Calculated				Allowable
				Horizontal direction		Vertical direction		
				Inside	Outside	Inside	Outside	
Wall EL-7.4m ~EL-2.0m	6007	-4.0	-25.9	0.7	19.6	-2.9	31.6	372.2
	4006	-7.9		-3.6	-1.7	-16.1	58.8	
	4010	-5.0		-3.8	17.0	-8.3	23.0	
Wall EL-2.0m ~EL4.65m	6043	-2.4	-25.9	-6.6	-2.5	-10.2	-7.2	372.2
	4036	-1.5		-6.9	-8.4	1.3	-4.1	
	4040	-3.7		-8.1	1.7	-5.1	-9.5	
Wall EL4.65m ~EL9.06m	6081	-1.0	-25.9	-3.0	-2.8	-5.2	-4.9	372.2
	4066	-6.9		-3.7	-1.1	-8.2	67.7	
	4070	-4.3		5.0	35.6	-2.8	36.0	
Wall EL9.06m ~EL13.8m	6117	-2.7	-25.9	-0.1	-0.2	10.0	-7.7	372.2
	4096	-1.2		-1.6	-1.6	2.5	-3.8	
	4100	-0.3		9.1	2.0	4.8	1.0	

Note: Negative value means compression.

Table 3G.2-19

Rebar and Concrete Stresses (Basemat and Slabs): Selected Load Combination CB-4

Location	Element ID	Concrete Stress (MPa)		Primary Reinforcement Stress (MPa)				
		Calculated	Allowable	Calculated				Allowable
				X-direction		Y-direction		
				Top	Bottom	Top	Bottom	
Basemat EL-7.4m	67	-1.5	-23.5	-6.5	-2.4	-9.4	-1.1	372.2
	72	-2.7		-17.9	4.5	-5.4	14.1	
	115	-1.8		-8.6	0.0	-6.0	-1.0	
	120	-1.8		-11.8	0.2	-6.4	0.4	
Slab B1F EL-2.0m	567	-4.8	-29.3	-12.2	-24.8	1.5	-1.5	372.2
	572	-4.1		-19.9	-23.4	-8.6	-10.4	
	615	-3.3		-9.2	-16.4	-3.7	-4.2	
	620	-5.4		67.1	7.1	88.9	7.0	
Slab 1F EL4.65m	1067	-8.4	-29.3	-28.9	13.8	-8.9	4.5	372.2
	1072	-3.8		-6.7	-12.8	-22.8	-23.3	
	1115	-8.0		-13.9	-18.9	102.7	-18.2	
	1120	-6.9		-21.2	-23.0	-22.2	-14.5	
Slab 2F EL9.06m	1567	-5.1	-29.3	-29.6	-18.9	2.8	-13.3	372.2
	1572	-6.3		33.7	4.2	-30.0	-39.1	
	1615	-4.2		-18.9	-19.6	82.2	1.3	
	1620	-14.2		74.8	38.5	75.9	37.3	
Roof EL13.8m	1867	-0.6	-29.3	-8.6	39.6	47.9	-15.9	372.2
	1872	-4.4		65.8	15.4	79.2	-0.3	
	1915	-4.4		53.0	15.0	66.7	-4.6	
	1920	-10.6		104.4	13.3	111.8	-6.9	

Note: Negative value means compression.

Table 3G.2-20

Rebar and Concrete Stresses (Walls): Selected Load Combination CB-4

Location	Element ID	Concrete Stress (MPa)		Primary Reinforcement Stress (MPa)				
		Calculated	Allowable	Calculated				Allowable
				Horizontal direction		Vertical direction		
				Inside	Outside	Inside	Outside	
Wall EL-7.4m ~EL-2.0m	6007	-3.8	-29.3	-0.8	32.8	-0.7	40.4	372.2
	4006	-6.8		-1.2	1.8	-14.3	49.2	
	4010	-4.4		-4.6	19.7	-1.9	29.0	
Wall EL-2.0m ~EL4.65m	6043	-3.5	-29.3	-7.4	0.3	-15.9	-6.2	372.2
	4036	-1.6		-7.1	-1.9	-8.2	-6.0	
	4040	-2.7		9.3	16.8	24.8	-2.7	
Wall EL4.65m ~EL9.06m	6081	-6.9	-29.3	20.4	76.6	-21.7	24.4	372.2
	4066	-11.6		34.6	99.3	-27.1	72.0	
	4070	-7.8		32.3	112.8	-4.5	91.6	
Wall EL9.06m ~EL13.8m	6117	-11.5	-29.3	33.6	97.5	-21.4	86.8	372.2
	4096	-7.6		15.7	57.8	-16.3	57.0	
	4100	-6.9		27.2	78.7	-0.3	95.5	

Note: Negative value means compression.

Table 3G.2-21

Rebar and Concrete Stresses (Basemat and Slabs): Selected Load Combination CB-7

Location	Element ID	Concrete Stress (MPa)		Primary Reinforcement Stress (MPa)				
		Calculated	Allowable	Calculated				Allowable
				X-direction		Y-direction		
				Top	Bottom	Top	Bottom	
Basemat EL-7.4m	67	-1.0	-23.5	-4.5	-2.2	-6.9	-1.9	372.2
	72	-2.0		-13.2	2.4	-3.7	7.6	
	115	-1.3		-7.1	-0.1	-4.5	-1.1	
	120	-1.4		-9.1	0.3	-5.0	0.4	
Slab B1F EL-2.0m	567	-3.9	-29.3	-9.0	-19.7	7.6	-0.1	372.2
	572	-3.2		-15.0	-18.1	-6.1	-8.0	
	615	-2.6		-6.4	-12.7	-2.6	-3.1	
	620	-4.4		58.6	6.6	75.8	6.0	
Slab 1F EL4.65m	1067	-8.4	-29.3	-21.2	32.8	-6.8	8.9	372.2
	1072	-2.9		-4.9	-10.1	-17.2	-17.8	
	1115	-7.3		-9.7	-14.1	95.9	-16.0	
	1120	-5.4		-16.0	-17.8	-16.8	-11.3	
Slab 2F EL9.06m	1567	-4.3	-29.3	-24.0	-13.6	2.8	-10.4	372.2
	1572	-4.9		28.6	3.7	-22.7	-30.1	
	1615	-3.8		-14.4	-14.9	75.8	0.1	
	1620	-11.1		58.9	31.0	59.7	30.4	
Roof EL13.8m	1867	-0.2	-29.3	-6.5	27.2	37.9	-13.7	372.2
	1872	-3.4		43.1	10.5	49.6	-1.1	
	1915	-3.4		42.2	11.5	53.3	-3.3	
	1920	-8.2		80.3	10.3	86.1	-5.3	

Note: Negative value means compression.

Table 3G.2-22

Rebar and Concrete Stresses (Walls): Selected Load Combination CB-7

Location	Element ID	Concrete Stress (MPa)		Primary Reinforcement Stress (MPa)				
		Calculated	Allowable	Calculated				Allowable
				Horizontal direction		Vertical direction		
				Inside	Outside	Inside	Outside	
Wall EL-7.4m ~EL-2.0m	6007	-3.1	-29.3	-1.5	21.7	-3.0	27.8	372.2
	4006	-5.5		-0.8	1.8	-13.8	34.5	
	4010	-3.6		-2.9	17.8	-1.7	25.9	
Wall EL-2.0m ~EL4.65m	6043	-2.9	-29.3	-5.6	1.0	-13.9	-6.5	372.2
	4036	-1.2		-5.2	-1.3	-6.6	-5.9	
	4040	-2.0		5.3	13.3	18.0	-3.9	
Wall EL4.65m ~EL9.06m	6081	-5.2	-29.3	16.0	59.4	-17.2	16.4	372.2
	4066	-8.6		24.7	76.4	-20.6	53.0	
	4070	-7.2		15.4	88.2	24.9	60.7	
Wall EL9.06m ~EL13.8m	6117	-8.8	-29.3	25.8	74.9	-16.7	65.1	372.2
	4096	-5.8		12.2	45.2	-12.8	42.1	
	4100	-5.3		20.3	61.3	-0.2	72.8	

Note: Negative value means compression.

Table 3G.2-23

Rebar and Concrete Stresses (Basemat and Slabs): Selected Load Combination CB-9

Location	Element ID	Concrete Stress (MPa)		Primary Reinforcement Stress (MPa)				
		Calculated	Allowable	Calculated				Allowable
				X-direction		Y-direction		
				Top	Bottom	Top	Bottom	
Basemat EL-7.4m	67	-6.8	-23.5	-20.9	49.9	-40.0	69.9	372.2
	72	-11.9		-52.9	235.8	150.3	265.0	
	115	-6.9		127.3	132.5	144.5	-28.6	
	120	-5.9		-24.6	26.6	-19.7	29.2	
Slab B1F EL-2.0m	567	-11.6	-29.3	38.7	-29.0	172.6	28.0	372.2
	572	-5.9		-10.1	-20.8	-9.6	-24.7	
	615	-10.8		74.5	-16.2	86.6	19.9	
	620	-8.6		-13.8	-28.4	-6.5	-26.4	
Slab 1F EL4.65m	1067	-19.6	-29.3	-27.7	128.3	-7.3	58.4	372.2
	1072	-6.8		-19.7	7.3	-32.0	-22.2	
	1115	-12.7		-17.3	-16.2	168.0	-30.8	
	1120	-9.6		-19.7	26.7	-26.6	42.0	
Slab 2F EL9.06m	1567	-8.1	-29.3	-42.5	-30.3	1.7	-19.7	372.2
	1572	-7.8		-7.3	2.4	-40.2	-51.9	
	1615	-8.2		-41.8	-36.8	169.7	32.3	
	1620	-17.6		89.8	57.2	91.5	56.0	
Roof EL13.8m	1867	-16.5	-29.3	73.6	127.6	80.7	-34.4	372.2
	1872	-3.9		144.2	48.7	178.6	39.3	
	1915	-8.0		174.4	74.3	170.0	2.8	
	1920	-15.0		136.6	20.8	150.5	-8.3	

Note: Negative value means compression.

Table 3G.2-24

Rebar and Concrete Stresses (Walls): Selected Load Combination CB-9

Location	Element ID	Concrete Stress (MPa)		Primary Reinforcement Stress (MPa)				
		Calculated	Allowable	Calculated				Allowable
				Horizontal direction		Vertical direction		
				Inside	Outside	Inside	Outside	
Wall EL-7.4m ~EL-2.0m	6007	-11.5	-29.3	70.1	216.2	71.6	245.5	372.2
	4006	-14.4		136.7	187.3	108.2	287.6	
	4010	-10.4		37.3	199.6	49.8	269.1	
Wall EL-2.0m ~EL4.65m	6043	-8.6	-29.3	80.7	191.3	-30.8	116.3	372.2
	4036	-5.7		91.8	96.4	147.3	153.2	
	4040	-7.1		98.9	109.4	152.8	114.4	
Wall EL4.65m ~EL9.06m	6081	-11.6	-29.3	60.1	180.7	30.8	79.2	372.2
	4066	-17.1		72.7	197.4	-16.4	183.9	
	4070	-6.5		112.3	183.6	52.7	211.8	
Wall EL9.06m ~EL13.8m	6117	-17.7	-29.3	80.7	219.9	-34.5	140.2	372.2
	4096	-14.2		61.6	161.8	-17.7	143.4	
	4100	-11.0		79.1	167.4	21.3	234.4	

Note: Negative value means compression.

Table 3G.2-25

Calculation Results for Transverse Shear

Location	Element ID	Load ID	d (m)	ρ_w (%)	ρ_v (%)	Shear Forces (MN/m)				Vu/ϕVn
						Vu	Vc	Vs	ϕVn	
Basemat EL-7.4m	67	CB-9	2.818	0.357	0.177	3.159	3.751	2.065	4.943	0.639
	72	CB-9	2.721	0.369	0.177	2.419	2.460	1.994	3.786	0.639
	115	CB-9	2.799	0.359	0.177	1.654	1.917	2.051	3.373	0.490
	120	CB-9	2.734	0.368	0.177	2.441	4.552	2.003	5.572	0.438
Slab B1F EL-2.0m	567	CB-9	0.407	1.242	0.000	0.118	0.236	0.000	0.200	0.587
	572	CB-9	0.360	1.402	0.000	0.185	0.884	0.000	0.752	0.246
	615	CB-9	0.368	1.373	0.000	0.152	0.438	0.000	0.372	0.409
	620	CB-9	0.392	1.288	0.000	0.125	0.262	0.000	0.223	0.559
Slab 1F EL4.65m	1067	CB-9	0.379	1.333	0.000	0.077	0.360	0.000	0.306	0.250
	1072	CB-9	0.360	1.402	0.000	0.207	0.688	0.000	0.584	0.355
	1115	CB-9	0.410	1.232	0.000	0.318	0.416	0.000	0.353	0.899
	1120	CB-9	0.382	1.321	0.000	0.108	0.323	0.000	0.275	0.394
Slab 2F EL9.06m	1567	CB-9	0.373	1.356	0.000	0.045	0.354	0.000	0.301	0.150
	1572	CB-9	0.360	1.403	0.000	0.172	0.300	0.000	0.255	0.676
	1615	CB-9	0.410	1.232	0.081	0.303	0.308	0.137	0.379	0.799
	1620	CB-9	0.389	1.297	0.000	0.076	0.405	0.000	0.345	0.220
Slab RF EL13.8m	1867	CB-9	0.511	1.479	0.000	0.065	0.411	0.000	0.350	0.186
	1872	CB-9	0.501	1.510	0.000	0.121	0.329	0.000	0.280	0.433
	1915	CB-9	0.550	1.375	0.000	0.317	0.411	0.000	0.350	0.908
	1920	CB-9	0.529	1.429	0.000	0.072	0.518	0.000	0.441	0.164
Wall EL-7.4m ~EL-2.0m	6007	CB-9	0.677	1.489	0.355	0.464	1.722	0.995	2.309	0.201
	4006	CB-9	0.672	1.500	0.355	0.546	0.247	0.988	1.050	0.520
	4010	CB-9	0.673	1.497	0.355	0.629	0.427	0.989	1.203	0.523
Wall EL-2.0m ~EL4.65m	6043	CB-9	0.673	1.499	0.355	0.407	0.461	0.989	1.233	0.330
	4036	CB-4	0.672	1.500	0.710	0.791	0.654	1.975	2.235	0.354
	4040	CB-9	0.683	1.476	0.355	0.635	0.873	1.004	1.595	0.398
Wall EL4.65m ~EL9.06m	6081	CB-9	0.673	1.497	0.000	0.316	1.047	0.000	0.890	0.355
	4066	CB-9	0.672	1.499	0.000	0.222	0.679	0.000	0.577	0.384
	4070	CB-9	0.699	1.442	0.000	0.111	0.294	0.000	0.250	0.445
Wall EL9.06m ~EL13.8m	6117	CB-9	0.493	1.533	0.000	0.401	0.564	0.000	0.480	0.835
	4096	CB-9	0.493	1.533	0.000	0.470	0.626	0.000	0.532	0.883
	4100	CB-9	0.507	1.490	0.000	0.139	0.309	0.000	0.262	0.529

Table 3G.2-26

Factors of Safety for Foundation Stability

Load Combination	Overturning		Sliding		Floatation	
	Required	Actual	Required	Actual	Required	Actual
D + H + E'	1.1	62.5	1.1	1.28	--	--
D + F'	--	--	--	--	1.1	1.85

Where,
D = Dead Load
H = Lateral soil pressure
E' = Safe Shutdown Earthquake
F' = Buoyant forces of design basis flood

Table 3G.2-27

Maximum Soil Bearing Stress Involving SSE

	Site Condition*		
	Soft (V_s = 300 m/sec)	Medium (V_s = 800 m/sec)	Hard ($V_s \geq$ 1700 m/sec)
Bearing Stress (MPa)	2.8	2.5	2.4

* See Table 3A.3-1 for site properties. For site specific application, use the larger value or a linearly interpolated value of the applicable range of shear wave velocities at the foundation level.

Figure 3G.2-1. CB Concrete Outline Plan at EL -7400 and Foundation Reinforcement

Figure 3G.2-2. CB Concrete Outline Plan at EL –2000/4650 and Section Details

Figure 3G.2-3. CB Concrete Outline Plan at EL 9060/13800, Section and Section Detail

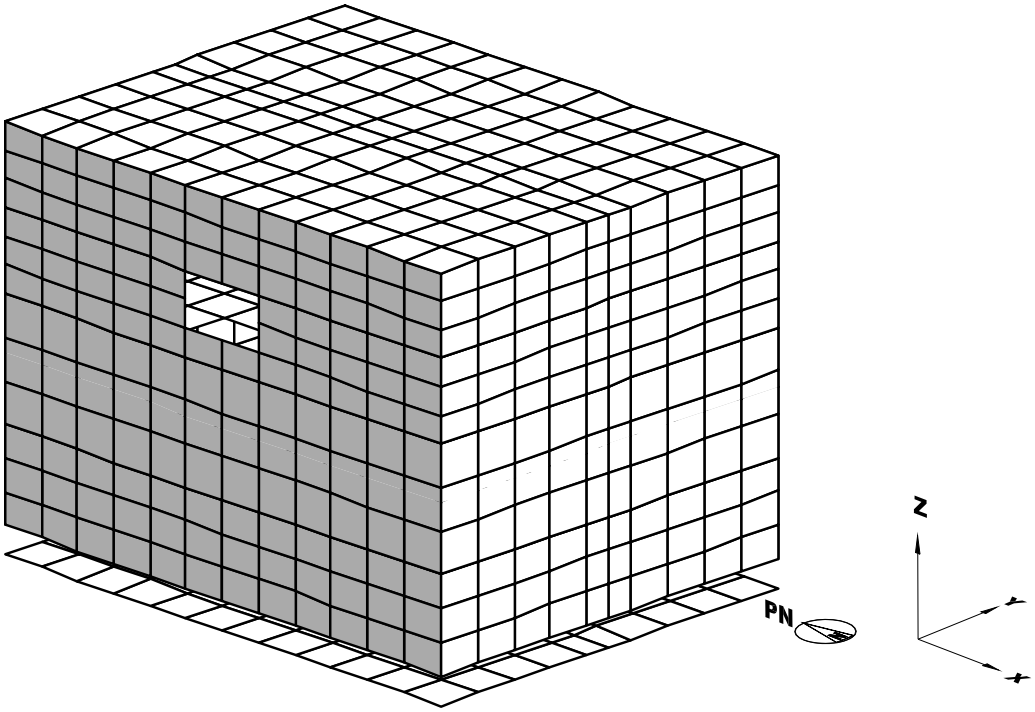

Whole View

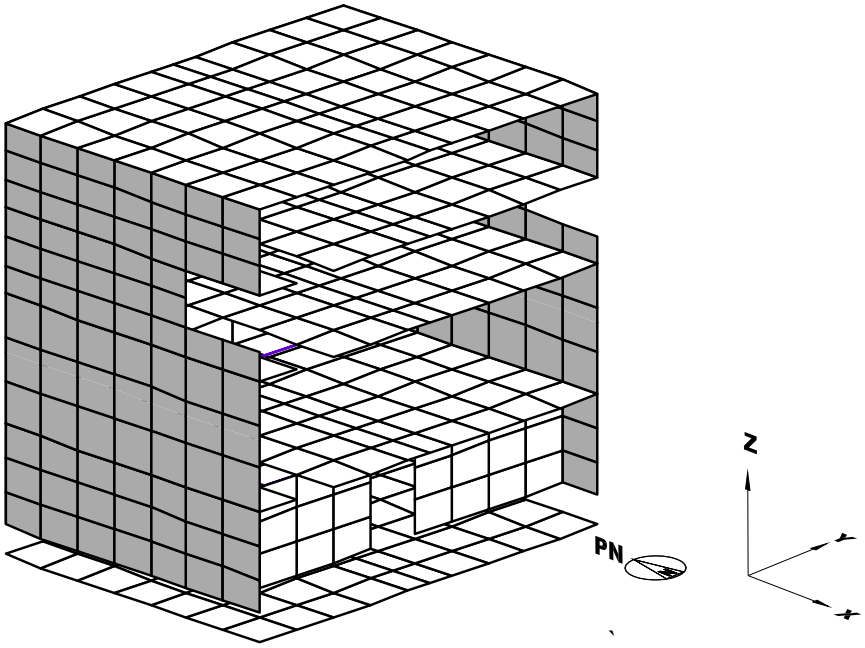

Cut View

Figure 3G.2-4. Finite Element Model of CB (Isometric View)

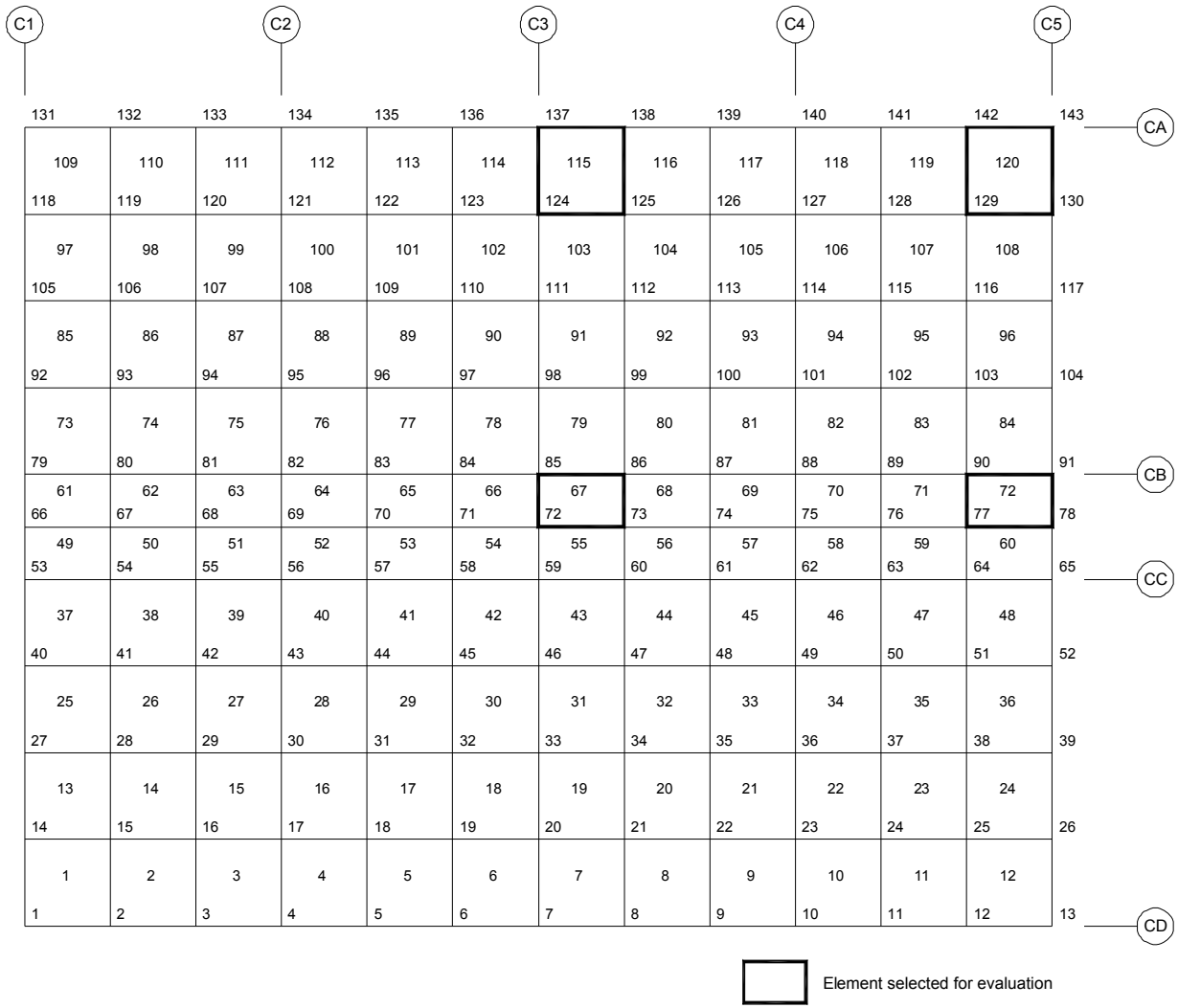

Figure 3G.2-5. Finite Element Model of CB (Foundation Mat)

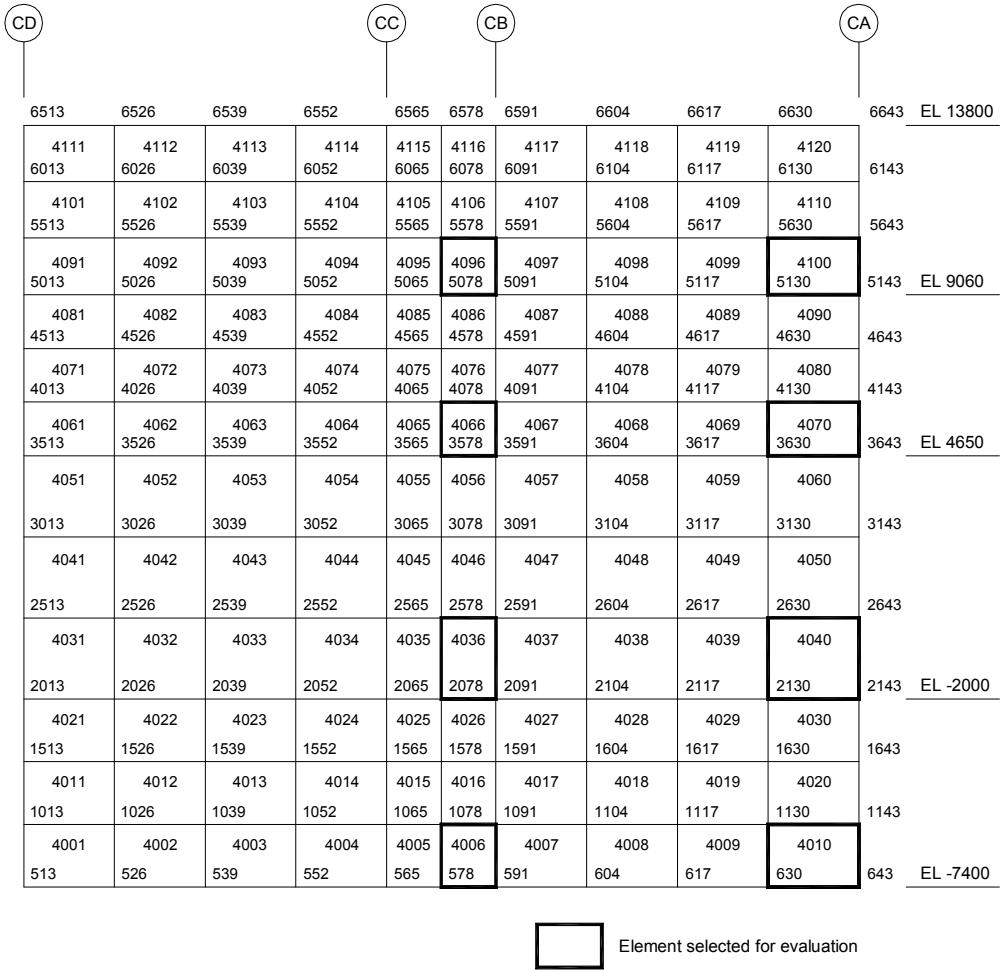

Figure 3G.2-6. Finite Element Model of CB (External Wall: South Side)

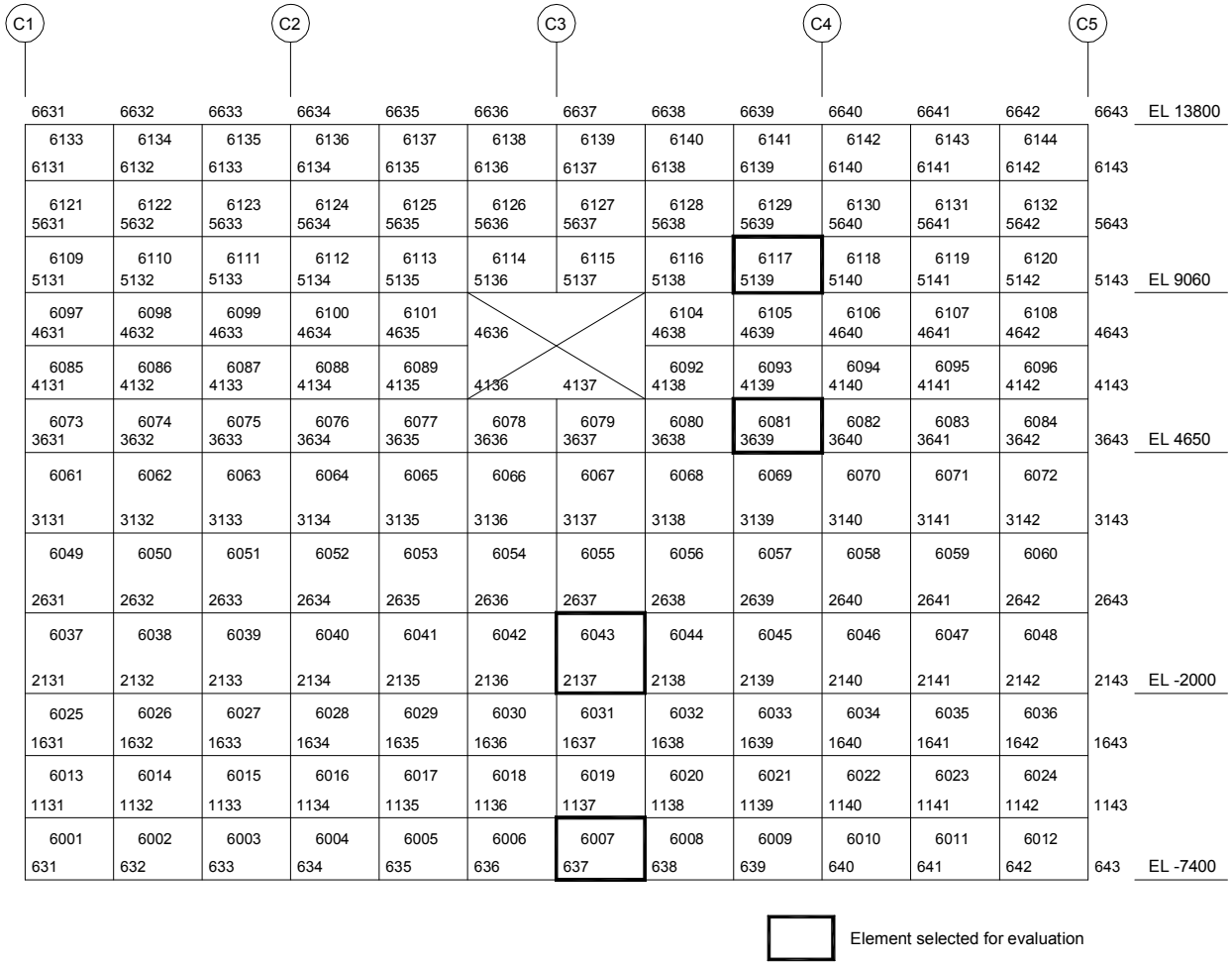

Figure 3G.2-7. Finite Element Model of CB (External Wall: East Side)

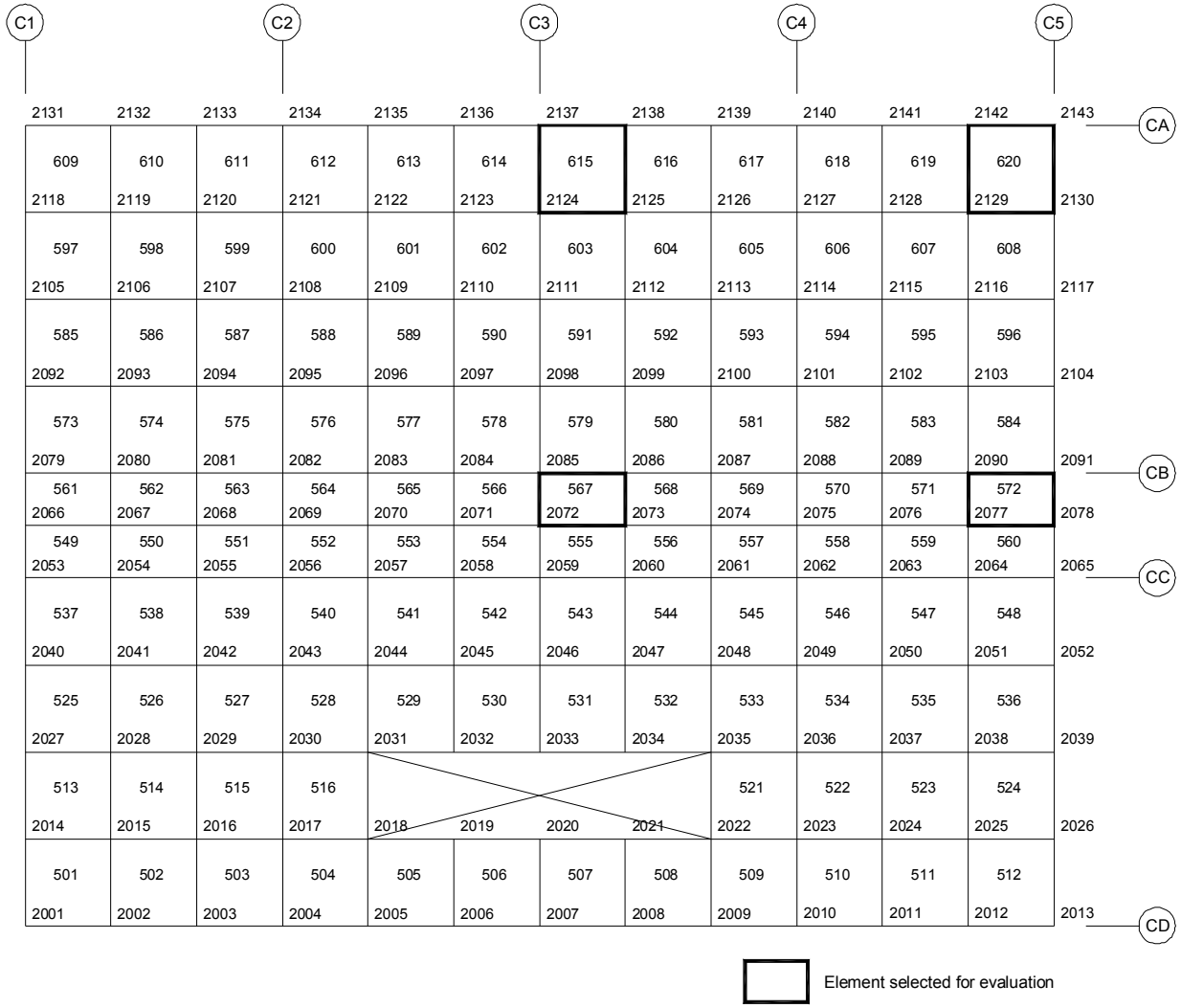

Figure 3G.2-8. Finite Element Model of CB (Floor Slab: EL -2000)

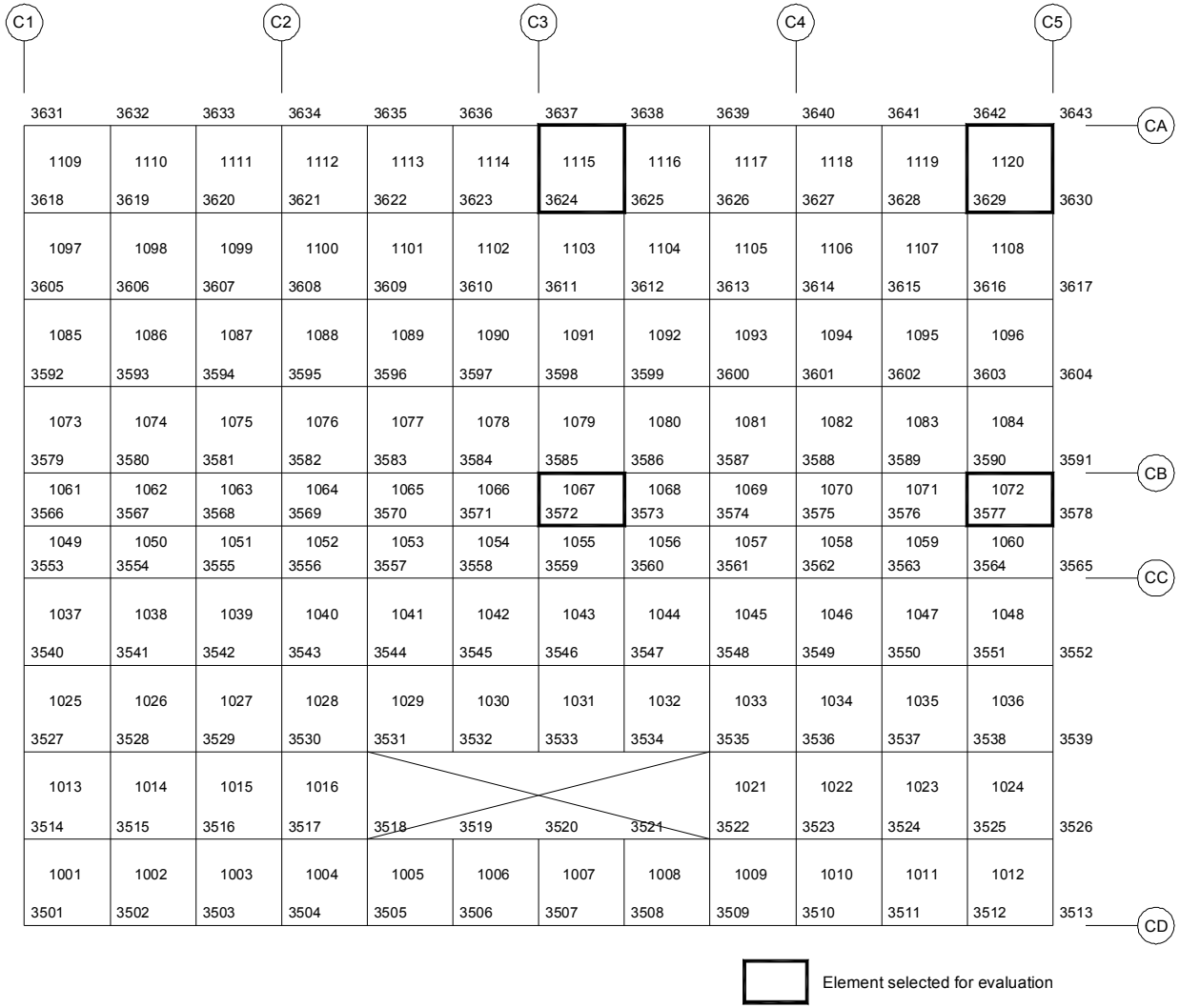

Figure 3G.2-9. Finite Element Model of CB (Floor Slab: EL 4650)

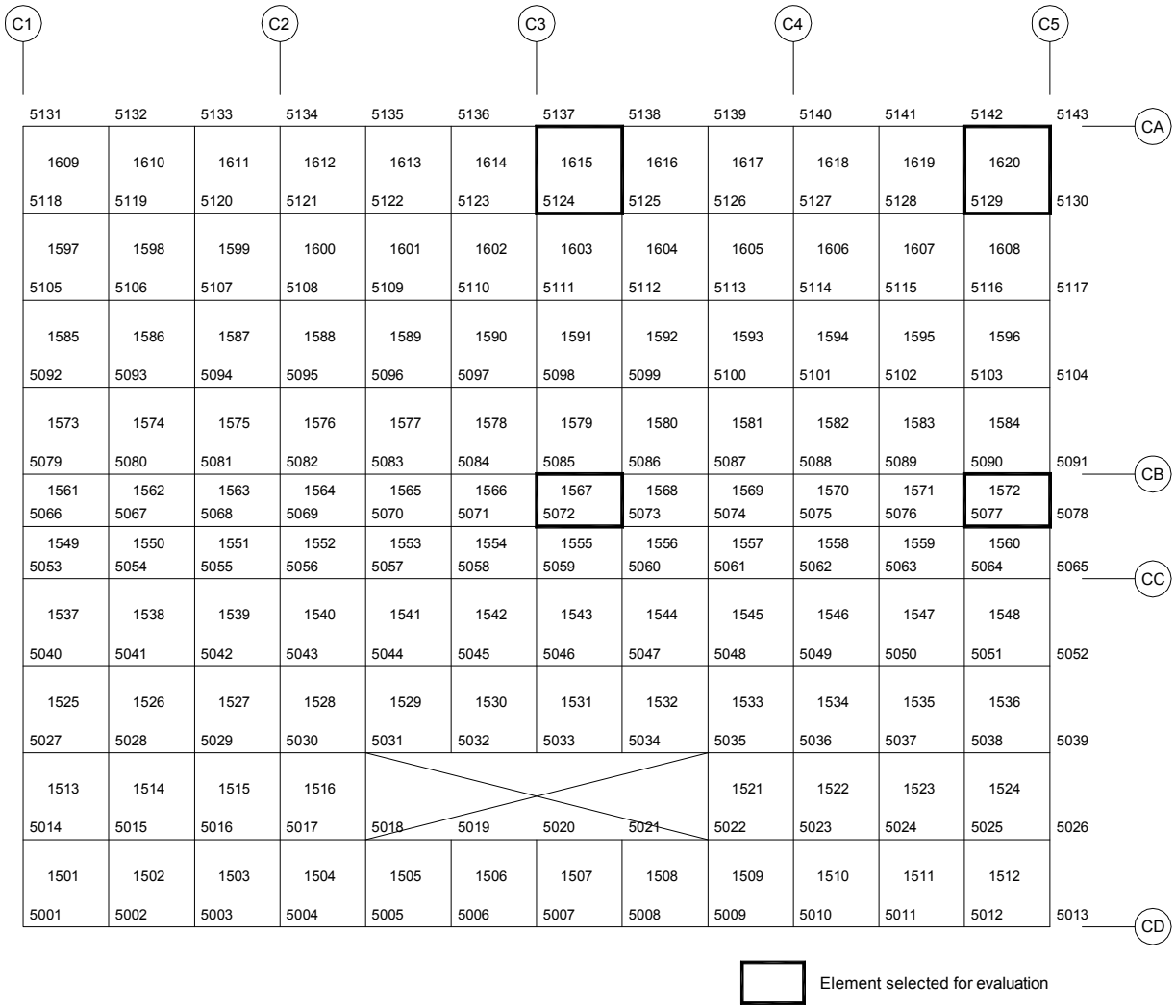

Figure 3G.2-10. Finite Element Model of CB (Floor Slab: EL 9060)

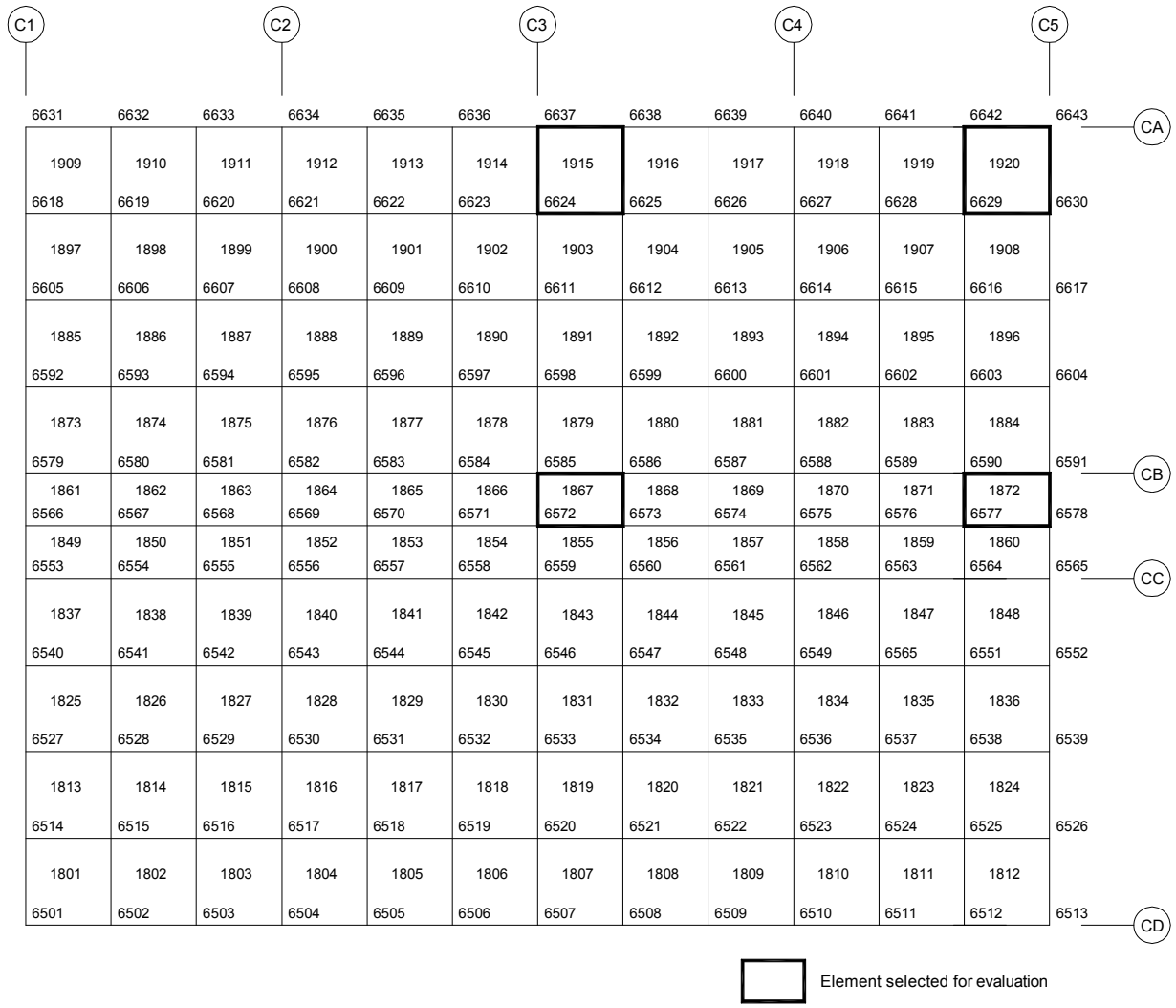

Figure 3G.2-11. Finite Element Model of CB (Roof: EL 13800)

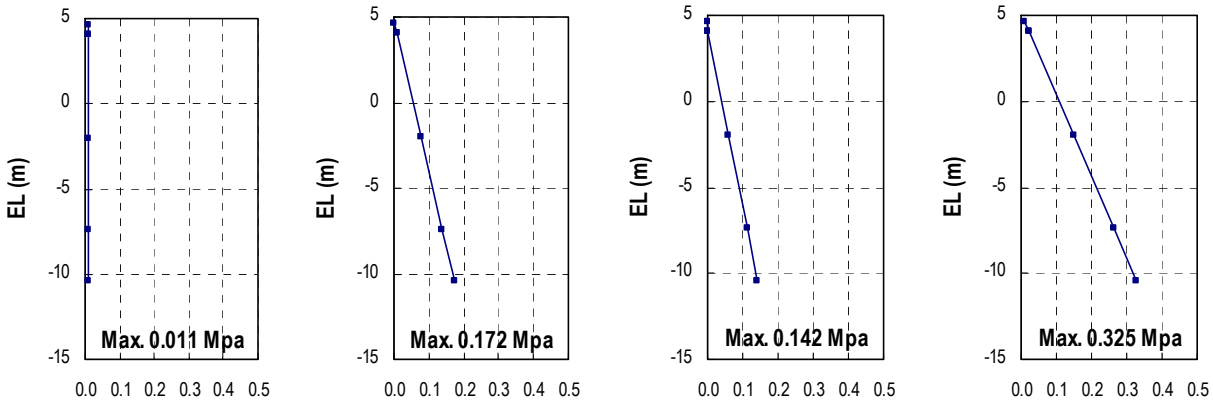

Surcharge (MPa) + Soil Pressure (MPa) + Hydrostatic (MPa) = Total (MPa)

Pressure on Walls CA, CD & C1

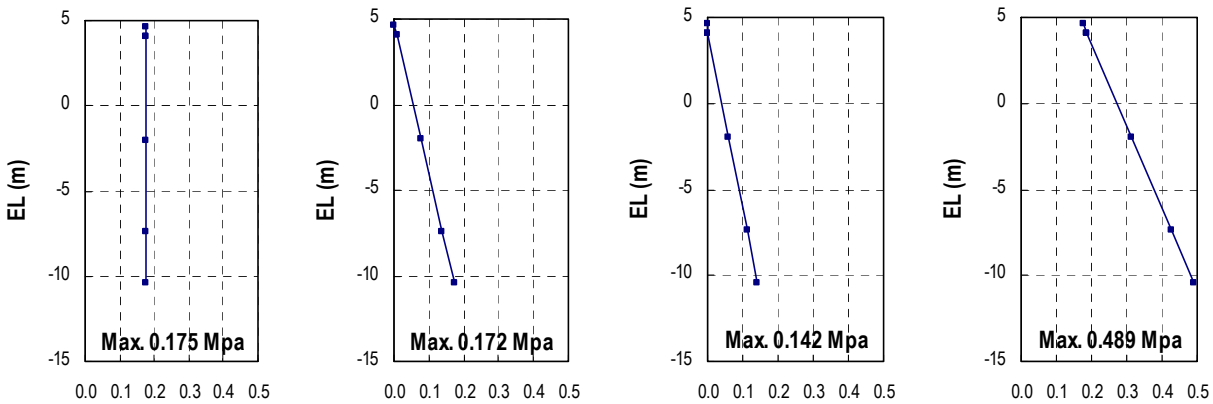

Surcharge (MPa) + Soil Pressure (MPa) + Hydrostatic (MPa) = Total (MPa)

Pressure on Wall C5

Figure 3G.2-12. Soil Pressure at Rest

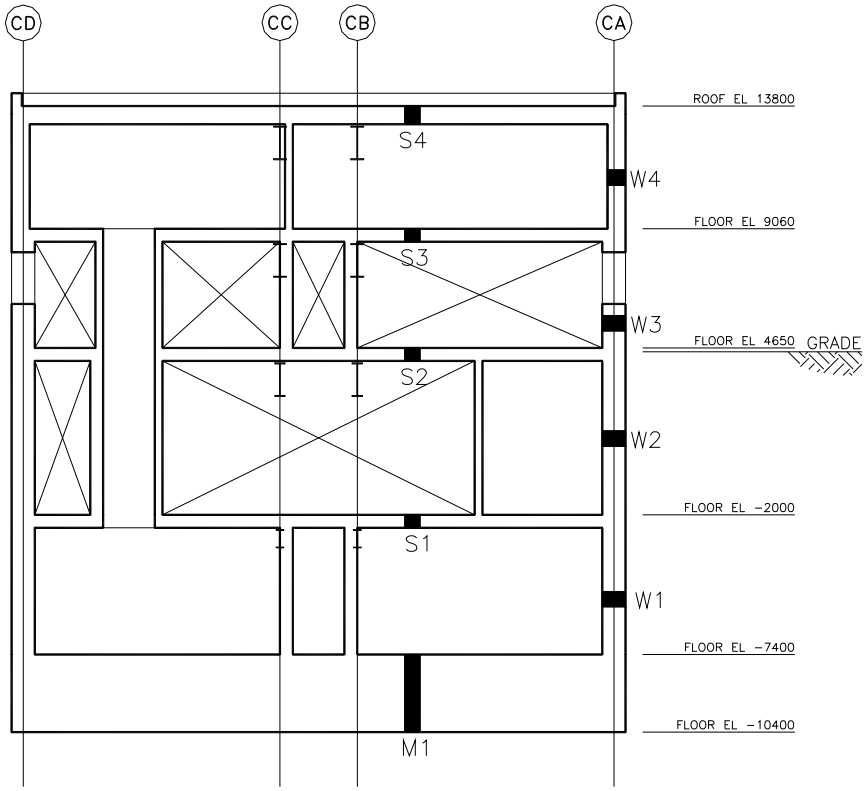

Figure 3G.2-13. Sections Where Thermal Loads Are Defined

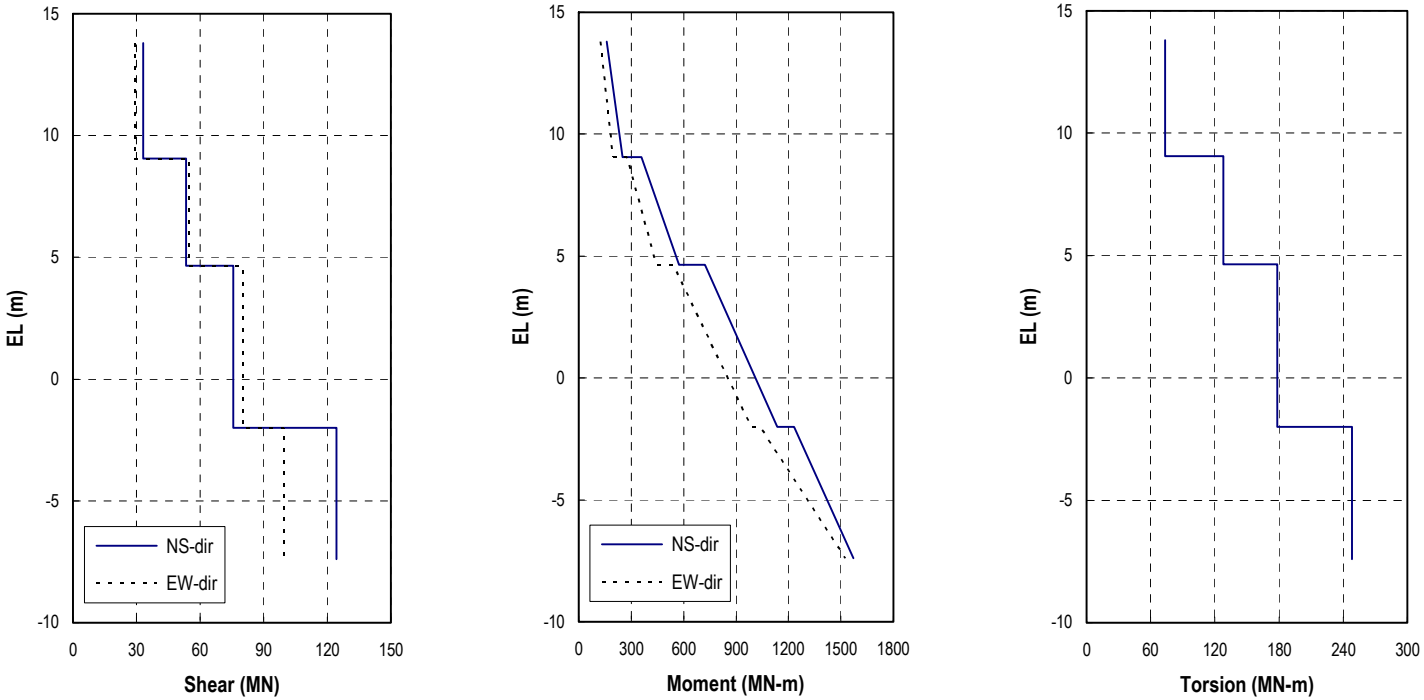

Figure 3G.2-14. Design Seismic Shears and Moments for CB

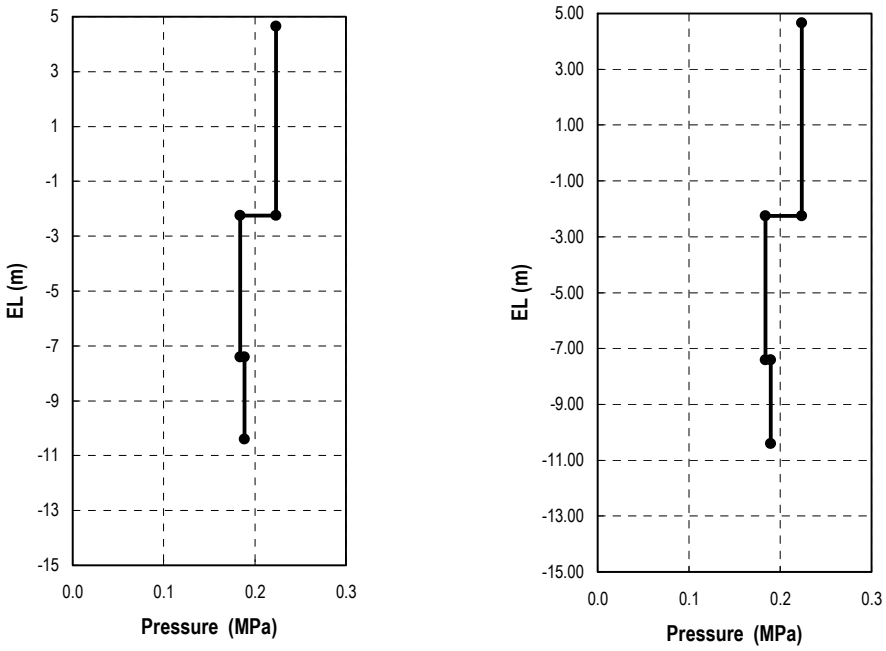

C1 Wall and C5 Wall CA Wall and CD Wall

Figure 3G.2-15. Seismic Lateral Soil Pressure

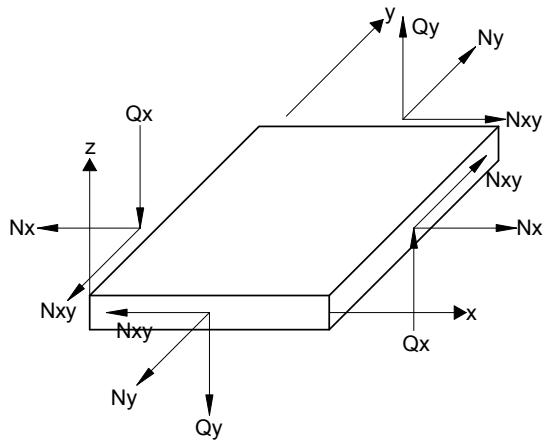

Membrane and Shear Forces

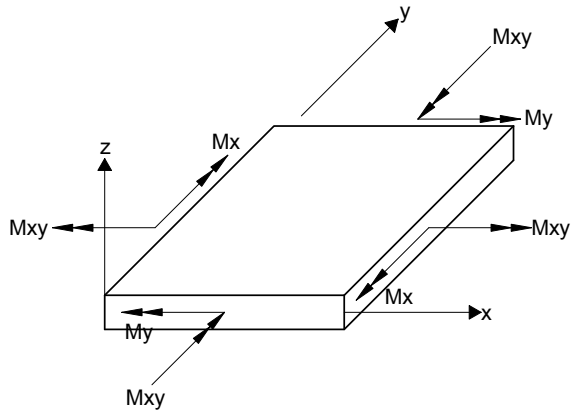

Moments

Definition of Element Coordinate System

Structure	x	y	z
Wall in N-S Direction	horizontal	vertical	toward West
Wall in E-W Direction	horizontal	vertical	toward South
Foundation Mat Floor Slab	toward South	toward East	upward

Figure 3G.2-16. Force and Moment in Shell Element

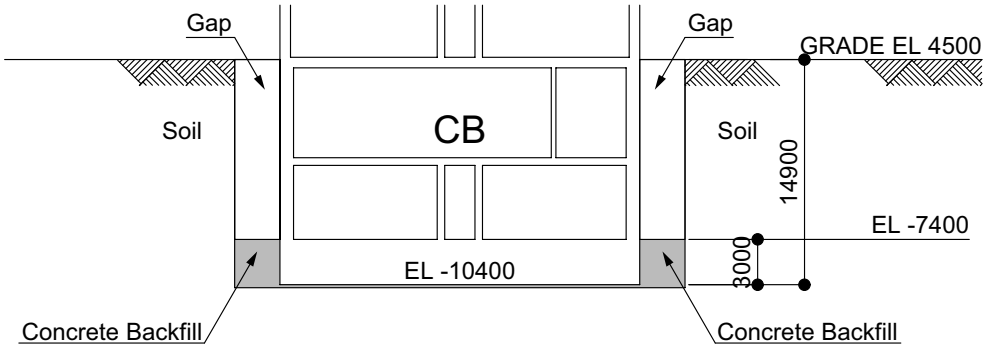

Note: Backfill method for gap and excavation method (e.g., vertical cut, open cut) is determined considering actual site conditions. The gap is completely filled with compacted engineered backfill material.

Figure 3G.2-17. Concrete Backfill in Sliding Evaluation

3G.3 FUEL BUILDING

3G.3.1 Objective and Scope

The objective of this subsection is to document the structural design details, inputs and analytical results from the analysis the FB of the standard ESBWR plant. The scope includes the design and analysis of the structure for normal, severe environmental, extreme environmental, and construction loads.

3G.3.2 Conclusions

The following are the major summary conclusions on the design and analysis of the FB.

- Based on the results of finite element analyses performed in accordance with the design conditions identified in Subsection 3G.3.5, stresses in concrete and reinforcement are less than the allowable stresses per the applicable regulations, codes or standards listed in Section 3.8.
- The factors of safety against floatation, sliding, and overturning of the structure under various loading combinations are higher than the required minimum.
- The thickness of the roof slabs and exterior walls are more than the minimum required to preclude penetration, perforation or spalling resulting from impact of design basis tornado missiles.

3G.3.3 Structural Description

The FB is integrated with the RB, sharing a common wall between the RB and the FB and a large common foundation mat (see Subsection 3.8.4.1.3). The FB houses the spent fuel pool facilities and their supporting system, and HVAC equipment. The FB is a Seismic Category I structure except for the penthouse that covers HVAC equipment. The penthouse is a Seismic Category II structure.

The FB is a reinforced concrete box type shear wall structure consisting of walls and slabs and is supported by a foundation mat. Concrete framing (steel beams can be used partially) is composite with concrete slab and used to support the slabs for vertical loads. The FB is a shear wall structure designed to accommodate all seismic loads with its walls and the connected floors. Therefore, frame members such as beams or columns are designed to accommodate deformations of the walls in case of earthquake conditions.

The key dimensions of the FB are summarized in Table 3.8-8. Figures 3G.1-1 through 3G.1-4 and Figure 3G.1-6 show the outline plans of the FB.

3G.3.4 Analytical Models

Because the FB is integrated with the RB, the finite element model which integrates the RB and FB is used for the stress analysis of the FB. The analysis model is described in Subsection 3G.1.4.1.

3G.3.5 Structural Analysis and Design

3G.3.5.1 Site Design Parameters

The key site design parameters are described in Subsection 3G.1.5.1.

3G.3.5.2 Design Loads, Load Combinations, and Material Properties

3G.3.5.2.1 Design Loads

This section presents only the loads which are applied to the FB directly. Other loads which are applied to the RCCV only but have effects on FB structures because of common foundation mat, like P_a and T_a, are also considered in the FB design.

3G.3.5.2.1.1 Dead Load (D) and Live Load (L and Lo)

The weights of structures are evaluated using the following unit weights.

- reinforced concrete: 23.5 kN/m^3 (150 lbf/ft^3)
- steel: 77.0 kN/m^3 (490 lbf/ft^3)

Weights of major equipment, miscellaneous structures, piping, and commodities are summarized in Tables 3G.3-1 and 3G.3-2.

Live loads on the FB floor and roof slabs are described in Subsection 3.8.4.3.3.

3G.3.5.2.1.2 Snow and Rain Load

The snow and rain load is applied to the roof slab and is taken as shown in Table 3G.1-2. One hundred percent of the snow load is applied when combined with seismic loads.

3G.3.5.2.1.3 Lateral Soil Pressure at Rest

The lateral soil pressure at rest is applied to the walls below grade and is based on soil properties given in Table 3G.1-2. Pressures to be applied to the walls are provided in Figure 3G.1-19.

3G.3.5.2.1.4 Wind Load (W)

The wind load is applied to the roof slab and external walls above grade and is based on basic wind speed given in Table 3G.1-2.

3G.3.5.2.1.5 Tornado Load (W_t)

The tornado load is applied to roof slab and external walls above grade and its characteristics are given in Table 3G.1-2. The tornado load, W_t is further defined by the combinations described in Subsection 3G.1.5.2.1.5.

3G.3.5.2.1.6 Thermal Load

Thermal loads for the FB are evaluated for the normal operating conditions and accident conditions. The accident thermal load, T_a, includes the thermal effects in the spent fuel pool which may occur due to loss of Fuel and Auxiliary Pools Cooling System (FAPCS) cooling function. The effect is included in the load combination Nos. 8 and 9 in Table 3.8-15. Figure 3G.3-1 shows the section location for temperature distributions for various structural

elements of the FB, and Table 3G.3-3 shows the magnitude of equivalent linear temperature distribution.

The evaluation method of temperature effect on the concrete design is based on ACI 349-01 Commentary Figure RA.1.

Two cases, winter and summer, are considered in the analysis.

Stress-free temperature is 15.5°C (60°F).

3G.3.5.2.1.7 Design Seismic Loads

The design seismic loads applied to the FB are provided in Subsection 3G.1.5.2.1.13.

Seismic lateral soil pressure for the FB is provided in Subsection 3G.1.5.2.1.13.

3G.3.5.2.2 Load Combinations and Acceptance Criteria

Load combinations and acceptance criteria for the FB concrete structures are described in Subsections 3.8.4.3.3 and 3.8.4.5.3, respectively. Based on previous experience, critical load combinations are selected for the FB design. They are mainly combinations including LOCA loads and seismic loads as shown in Table 3G.3-4. The acceptance criteria for the selected combinations are also included in Table 3G.3-4.

3G.3.5.2.3 Material Properties

Properties of the materials used for the FB design analyses are the same as those for the RB, and they are described in Subsection 3G.1.5.2.3.

3G.3.5.3 Stability Requirements

The stability requirements for the FB foundation are the same as the RB and are described in Subsections 3G.1.5.3 and 3G.1.5.5.

3G.3.5.4 Structural Design Evaluation

The evaluation of the seismic Category I structures in the FB is performed with the same procedure as the RB, which is described in Subsection 3G.1.5.4.

Figure 3G.3-2 shows the location of the sections that are selected for evaluation. They are selected, in principle, from the center and both ends of wall and slab, where it is reasonably expected that the critical stresses appear based on engineering experience and judgment. Tables 3G.3-5 through 3G.3-9 show the forces and moments at the selected sections from NASTRAN analysis. Element forces and moments listed in the tables are defined with relation to the element coordinate system shown in Figure 3G.3-3. Tables 3G.3-10 through 3G.3-12 show the combined forces and moments in accordance with the selected load combinations listed in Table 3G.3-4.

Figures 3G.3-4 and 3G.3-5 present the design drawings used for the evaluation of the FB structural design. Table 3G.3-13 lists the sectional thicknesses and rebar ratios used in the evaluation.

Tables 3G.3-14 through 3G.3-16 show the rebar and concrete stresses at these sections for the representative elements. Table 3G.3-17 summarizes evaluation results for transverse shear in accordance with ACI 349, Chapter 11.

3G.3.5.4.1 Shear Walls and Spent Fuel Pool Walls

The maximum rebar stress of 338.6 MPa (49.11 ksi) is found in the vertical rebar at Section 1 due to the load combination FB-9 as shown in Table 3G.3-16. The maximum horizontal rebar stress is found to be 333.9 MPa (48.43 ksi) at Section 4 for the combination FB-9. The maximum transverse shear force is found to be 3.99 MN/m (22.80 kips/in) against the shear strength of 5.79 MN/m (33.10 kips/in) at Section 4, Spent Fuel Pool wall.

3G.3.5.4.2 Floor Slabs

The maximum rebar stress of 156.2 MPa (22.65 ksi) is found due to the load combination FB-9 as shown in Table 3G.3-16. The maximum transverse shear force is found to be 1.08 MN/m (6.17 kips/in) against the shear strength of 4.44 MN/m (25.40 kips/in).

3G.3.5.4.3 Foundation Mat

The maximum rebar stress is found to be 333.0 MPa (48.30 ksi) due to the load combination FB-9 as shown in Table 3G.3-16. The maximum transverse shear force is found to be 11.99 MN/m (68.50 kips/in) against the shear strength of 16.29 MN/m (93.00 kips/in).

3G.3.5.5 Foundation Stability

The FB shares the foundation mat with the RB. Evaluation results of the foundation stability are described in Subsection 3G.1.5.5.

3G.3.5.6 Tornado Missile Evaluation

The minimum thickness required to prevent penetration, concrete spalling and scabbing is evaluated. The methods and procedures are shown in Subsection 3.5.3.1.1. The minimum thickness required is less than the minimum 1000 mm (39.4 in) and 700 mm (27.6 in) thickness provided for the FB external walls and slab at EL 22500, respectively.

Table 3G.3-1

Miscellaneous Structures and Commodity in Spent Fuel Pool

Description	Weight
Fuel Pool	
a. Spent Fuel Storage Racks	102 kN/m^2
b. Floor Liner	1.6 kN/m^2
c. Wall Liner	1.0 kN/m^2
d. Water (14.35 m)	141 kN/m^2
Pool Gate	
a. Spent Fuel Pool Gate	70 kN
b. Cask Pit Gate	70 kN
Spent Fuel Cask Pool	
a. Spent Fuel Cask	120 kN/m^2
b. Floor Liner	1.6 kN/m^2
c. Wall Liner	1.0 kN/m^2
d. Water (14.35 m)	141 kN/m^2
e. Cask Lid	100 kN
f. Cask bearing Plate	20 kN
Inclined Fuel Transfer Tube Pool	
a. Floor Liner	1.6 kN/m^2
b. Wall Liner	1.0 kN/m^2
c. Water (14.35 m)	141 kN/m^2
d. Transfer Tube Equipment	160 kN

Table 3G.3-2

Miscellaneous Structures, Piping, and Commodity Load on FB Floor

Elevation (mm)	Area Load
22,500	2.4 kN/m^2 (50psf)
4,650	2.4 kN/m^2 (50psf)
-1,000	2.4 kN/m^2 (50psf)
-6,400	2.4 kN/m^2 (50psf)
-11,500	2.4 kN/m^2 (50psf)

Table 3G.3-3

Equivalent Liner Temperature Distributions at Various Sections

Section*1	Side*2		Equivalent Linear Temperature*3 (°C)			
			Normal Operation (Winter)		Accident Condition (Winter)	
	1	2	T_d	T_g	T_d	T_g
W1	FP	RM	32.1	33.6	48.7	83.1
W2	FP	RM	31.6	34.6	44.7	81.7
W3	FP	GR	32.2	33.4	44.7	79.6
W4	FP	GR	32.2	33.4	39.1	66.2

*1: See Figure 3G.3-1 for the location of sections.

*2: FP: Spent Fuel Pool, RM: FB Room, GR: Ground

*3: T_d: Average Temperature, T_g: Surface Temperature Difference (positive when temperature at Side 1 is higher)

Table 3G.3-4

Selected Load Combinations for the FB

Category	Load Combination											Acceptance Criteria*1
	No. *2	D	L	P_a *3	T_o	T_a *3	E'*4	W	R_a *4	SRV*4	Chugging*4	
Severe Environmental	FB-4	1.05	1.3		1.3			1.3				U
LOCA (1.5P_a) 72 hours	FB-8	1.0	1.0	1.5		1.0			1.0	1.25	1.5	U
LOCA + SSE 72 hours	FB-9	1.0	1.0	1.0		1.0	1.0		1.0	1.0	1.0	U

*1: U = Envelope of "Allowable Stress as in ASME Section III, Div. 2, Subsection CC-3420 for Factored Load Combination" and "Required section strength based on the strength design method per ACI 349-01."

*2: Based on Table 3.8-15.

*3: P_a and T_a are accident pressure load within the containment and thermal load generated by LOCA, respectively. T_a includes the thermal effects in the spent fuel pool due to loss of FAPCS cooling function.

P_a and T_a are indirect loads, but their effects are considered in the FB design.

*4: In load combinations that combine SSE with SRV, Chugging and CO, the loads are combined by SRSS.

Table 3G.3-5

Results of NASTRAN Analysis: Dead Load

Location	Element ID	Nx (MN/m)	Ny (MN/m)	Nxy (MN/m)	Mx (MNm/m)	My (MNm/m)	Mxy (MNm/m)	Qx (MN/m)	Qy (MN/m)
1 Exterior Wall and Pool Wall @ EL-11.50 ~-10.50m	60011	-0.479	-1.785	-0.532	-0.160	-1.149	-0.028	-0.097	-0.366
	60219	0.337	-1.565	-0.302	-0.653	-0.826	-0.169	0.032	0.289
	70201	0.298	-0.173	0.002	0.499	-0.014	0.116	-0.273	0.072
	70204	0.424	-1.004	0.031	-0.227	-0.052	0.121	-0.003	-0.358
	110718	0.324	-1.355	-0.066	-0.050	0.084	0.008	0.036	0.190
2 Exterior Wall @ EL-4.65 ~-6.60m	62011	0.088	-1.037	0.069	0.043	0.146	0.010	0.010	0.056
	62019	0.125	-0.627	-0.190	-0.032	0.048	-0.031	-0.001	0.021
	72001	0.110	-0.171	0.108	0.106	0.020	-0.006	-0.015	-0.005
	72004	0.146	-0.451	0.200	-0.038	0.004	0.001	-0.016	0.014
3 Exterior Wall @ EL22.50 ~24.60m	64011	0.099	-0.287	-0.092	-0.111	-0.534	-0.004	-0.005	0.075
	64019	-0.108	-0.369	-0.064	-0.061	-0.371	0.053	0.063	0.063
	74001	-0.015	-0.050	0.092	0.049	-0.045	-0.046	-0.020	-0.030
	74004	-0.050	-0.212	0.088	-0.078	-0.336	-0.061	0.019	-0.069
4 Spent Fuel Pool Wall @ EL-5.10 ~-3.30m	60819	0.603	-1.253	-0.492	-1.105	-0.818	-0.249	-0.006	-0.070
	70801	0.676	-0.156	0.012	1.074	0.074	-0.015	-0.548	0.031
	70804	0.581	-0.750	0.133	-0.561	-0.466	0.064	-0.097	0.045
	110748	0.225	-1.009	-0.441	-0.184	-0.081	-0.008	0.073	-0.025
5 Basemat	90306	-1.089	-0.434	0.519	0.939	-0.124	0.175	-0.535	1.186
	90310	-0.134	-0.121	-0.043	-0.153	-0.152	-0.696	0.171	-0.067
	90410	-0.454	-0.918	0.533	-0.712	0.164	1.499	1.396	-0.066
5 Basemat @ Spent Fuel Pool	90486	0.294	0.023	0.095	3.606	2.368	0.278	-0.180	0.125
	90490	0.430	0.193	0.284	1.432	1.257	0.506	1.197	0.261
	90526	0.517	0.487	0.018	1.983	2.122	0.126	-0.227	-0.794
6 Slab EL4.65m	93306	0.189	0.018	0.025	0.048	-0.003	0.005	0.031	-0.099
	93310	0.039	0.055	0.231	0.032	0.008	0.034	-0.023	0.006
	93410	0.313	0.318	-0.450	0.013	0.013	-0.069	0.001	-0.010

Table 3G.3-6

Results of NASTRAN Analysis: Thermal Load (Winter)

Location	Element ID	Nx (MN/m)	Ny (MN/m)	Nxy (MN/m)	Mx (MNm/m)	My (MNm/m)	Mxy (MNm/m)	Qx (MN/m)	Qy (MN/m)
1 Exterior Wall	60011	-1.384	0.477	-0.339	1.280	1.116	0.111	-0.386	-0.113
and Pool Wall	60219	0.346	-3.904	1.390	-22.210	-29.543	-0.705	0.040	-3.334
@ EL-11.50	70201	1.886	3.103	-2.082	-9.857	-9.800	0.485	0.113	0.812
~-10.50m	70204	0.054	1.309	-1.353	-8.600	-9.704	0.357	0.163	0.084
	110718	-5.215	-5.510	-2.744	-4.390	-4.955	0.047	0.412	-0.504
2 Exterior Wall	62011	5.792	2.205	0.857	-1.050	-1.212	0.013	-0.038	-0.053
@ EL-4.65	62019	8.979	0.020	-2.349	-1.303	-1.808	-0.089	0.056	-0.166
~-6.60m	72001	6.347	-1.049	3.952	0.062	-0.998	0.052	-1.303	0.473
	72004	8.900	0.584	3.462	-1.667	-2.299	0.138	-0.101	0.338
3 Exterior Wall	64011	4.711	0.191	0.358	-0.959	-0.381	-0.033	-0.012	-0.085
@ EL22.50	64019	5.437	1.415	1.717	-1.028	-0.428	0.049	0.002	-0.056
~24.60m	74001	2.923	-0.822	-3.513	-0.721	-0.452	0.098	-0.293	0.081
	74004	4.106	0.207	-3.618	-0.945	-0.256	-0.054	0.039	0.093
4 Spent Fuel	60819	-2.264	-4.358	-0.357	-18.258	-17.484	-1.137	-0.079	-1.940
Pool Wall	70801	-0.192	3.118	-0.554	-9.534	-8.830	0.036	0.338	0.094
@ EL-5.10	70804	-1.696	0.628	0.018	-8.487	-8.519	0.490	0.004	0.347
~-3.30m	110748	-1.028	-5.130	-1.753	-3.188	-4.057	-0.239	0.788	-0.280
5 Basemat	90306	-0.891	-0.104	0.374	1.773	0.777	0.094	-0.041	0.263
	90310	0.146	0.250	0.330	1.230	1.339	0.636	0.137	-0.030
	90410	-0.178	-1.176	0.355	0.552	2.044	0.015	-0.255	-0.326
5 Basemat	90486	-4.328	-1.550	0.543	-31.929	-31.367	2.927	-0.234	0.718
@ Spent	90490	-4.114	1.286	0.657	-38.413	-34.888	0.923	2.994	2.034
Fuel Pool	90526	5.653	0.288	-0.632	-32.497	-12.815	0.082	-1.429	2.332
6 Slab EL4.65m	93306	-0.809	-0.029	-1.613	-0.049	0.041	-0.014	0.079	-0.032
	93310	-2.213	-2.170	-3.182	-0.748	-0.783	-0.241	0.266	0.291
	93410	-0.508	-2.745	-0.501	-0.023	-0.030	0.015	-0.142	-0.048

Table 3G.3-7

Results of NASTRAN Analysis: Seismic Load (Horizontal: North to South Direction)

Location	Element ID	Nx (MN/m)	Ny (MN/m)	Nxy (MN/m)	Mx (MNm/m)	My (MNm/m)	Mxy (MNm/m)	Qx (MN/m)	Qy (MN/m)
1 Exterior Wall and Pool Wall @ EL-11.50 ~-10.50m	60011	-4.974	-4.132	-0.842	-0.159	-1.012	-0.064	0.041	-0.353
	60219	-4.331	-5.856	-1.554	0.787	0.466	0.306	-0.110	0.204
	70201	0.098	-1.657	-2.673	-0.129	-0.589	-0.046	-0.254	0.097
	70204	1.149	-4.630	-5.158	-0.556	-1.110	-0.136	-0.019	0.242
	110718	1.846	-2.400	1.147	-0.012	0.047	-0.020	0.025	-0.081
2 Exterior Wall @ EL-4.65 ~-6.60m	62011	0.817	-1.295	-0.355	0.134	0.666	0.005	-0.018	0.279
	62019	0.763	-1.209	-2.124	0.042	0.223	-0.121	0.037	0.083
	72001	-0.117	-1.352	-3.519	-0.073	-0.058	0.010	-0.006	0.052
	72004	-0.286	-1.706	-4.128	-0.025	-0.029	-0.001	0.017	0.006
3 Exterior Wall @ EL22.50 ~24.60m	64011	3.618	-0.192	-0.226	-0.054	-0.114	0.010	0.003	-0.157
	64019	2.638	0.004	-0.653	-0.049	-0.130	0.137	0.039	-0.014
	74001	0.144	-0.106	-1.085	0.035	0.046	-0.047	0.037	-0.013
	74004	-1.324	-0.219	-1.583	0.033	0.018	-0.033	0.015	0.008
4 Spent Fuel Pool Wall @ EL-5.10 ~-3.30m	60819	-0.913	-4.138	-2.609	0.331	0.200	0.267	0.118	0.047
	70801	-0.017	-1.691	-4.182	-0.245	-0.135	-0.132	-0.087	-0.051
	70804	0.627	-2.998	-5.007	-0.420	-0.178	-0.204	0.033	0.098
	110748	0.603	-0.359	1.101	0.041	0.094	-0.130	-0.020	0.034
5 Basemat	90306	-1.332	-1.353	5.050	2.387	-0.476	4.931	-4.168	3.147
	90310	0.229	-1.746	0.216	0.850	-0.443	-1.007	-0.684	2.156
	90410	-0.863	-9.238	-0.135	1.318	1.178	2.207	3.061	-0.507
5 Basemat @ Spent Fuel Pool	90486	-1.353	-2.884	-2.052	15.253	8.966	-2.179	-2.169	-0.054
	90490	-0.501	-8.792	0.829	5.706	7.080	0.667	4.700	-0.518
	90526	0.726	-0.593	-5.563	7.413	1.750	-6.090	-2.498	-3.773
6 Slab EL4.65m	93306	2.047	0.394	-0.788	0.335	-0.448	-0.005	-0.048	0.039
	93310	0.713	0.293	0.983	0.434	-0.367	0.012	-0.420	0.415
	93410	0.095	0.998	0.837	0.256	0.087	0.062	-0.079	0.009

Table 3G.3-8

Results of NASTRAN Analysis: Seismic Load (Horizontal: East to West Direction)

Location	Element ID	Nx (MN/m)	Ny (MN/m)	Nxy (MN/m)	Mx (MNm/m)	My (MNm/m)	Mxy (MNm/m)	Qx (MN/m)	Qy (MN/m)
1 Exterior Wall and Pool Wall @ EL-11.50 ~-10.50m	60011	-0.106	-0.140	-6.111	-0.048	-0.651	-0.131	0.089	-0.103
	60219	0.613	6.980	-4.243	1.345	4.113	-0.307	-0.076	0.670
	70201	-0.012	2.514	-0.894	-0.093	0.289	-0.131	0.053	-0.148
	70204	0.847	7.253	0.948	0.119	0.399	-0.099	0.002	0.083
	110718	-0.397	3.726	0.193	0.338	0.757	0.044	0.044	0.453
2 Exterior Wall @ EL-4.65 ~-6.60m	62011	0.192	0.091	-3.939	0.030	0.060	-0.005	-0.028	0.015
	62019	-0.299	1.564	-2.102	0.020	0.016	0.007	-0.004	-0.003
	72001	-0.053	1.982	-0.527	-0.080	-0.083	-0.082	-0.017	0.031
	72004	-0.162	2.433	0.328	-0.013	-0.308	-0.065	-0.016	0.169
3 Exterior Wall @ EL22.50 ~24.60m	64011	-0.165	-0.013	-2.022	0.000	-0.012	0.010	0.004	0.003
	64019	-0.602	0.128	-1.312	0.005	0.014	-0.020	-0.009	-0.002
	74001	-0.170	0.249	0.183	-0.099	-0.019	0.112	0.009	0.027
	74004	-1.056	0.192	0.792	0.035	0.004	0.071	-0.035	-0.123
4 Spent Fuel Pool Wall @ EL-5.10 ~-3.30m	60819	-0.667	4.624	-3.578	1.101	1.127	-0.074	-0.069	0.331
	70801	-0.408	2.734	-0.990	-0.491	-0.030	-0.031	0.296	-0.070
	70804	-0.379	4.938	0.402	0.273	0.250	-0.064	0.025	-0.063
	110748	-0.573	1.976	0.272	-0.059	-0.145	-0.057	0.106	0.055
5 Basemat	90306	-7.362	-1.887	2.309	4.493	1.341	1.350	-2.147	4.891
	90310	-1.100	-0.668	0.422	-0.184	0.640	-1.514	1.882	0.117
	90410	0.099	0.337	4.867	-0.357	-1.797	7.909	-0.067	-3.731
5 Basemat @ Spent Fuel Pool	90486	1.939	1.517	0.910	-15.652	-16.364	-0.601	0.601	-1.861
	90490	0.971	3.631	4.022	0.429	-7.892	4.397	-6.383	-1.813
	90526	5.573	0.814	1.711	-11.621	-5.948	1.135	1.546	5.652
6 Slab EL4.65m	93306	1.734	0.127	-0.674	0.335	-0.163	-0.027	0.105	0.081
	93310	0.348	0.464	0.447	-0.137	0.095	-0.014	0.131	-0.075
	93410	-0.271	0.703	0.410	0.094	-0.067	0.121	-0.217	-0.007

Table 3G.3-9

Results of NASTRAN Analysis: Seismic Load (Vertical: Upward Direction)

Location	Element ID	Nx (MN/m)	Ny (MN/m)	Nxy (MN/m)	Mx (MNm/m)	My (MNm/m)	Mxy (MNm/m)	Qx (MN/m)	Qy (MN/m)
1 Exterior Wall and Pool Wall @ EL-11.50 ~-10.50m	60011	0.347	1.444	0.295	0.151	0.929	0.026	0.063	0.284
	60219	0.028	1.529	0.165	0.479	0.708	0.106	-0.021	-0.150
	70201	-0.036	0.252	-0.081	-0.321	0.046	-0.078	0.190	-0.076
	70204	-0.074	1.039	-0.038	0.142	0.070	-0.087	-0.001	0.233
	110718	-0.173	1.169	0.284	0.063	-0.016	-0.035	-0.020	-0.093
2 Exterior Wall @ EL-4.65 ~-6.60m	62011	-0.051	0.992	-0.111	-0.057	-0.254	-0.012	-0.009	-0.085
	62019	-0.052	0.677	0.047	0.017	-0.116	0.045	-0.002	-0.038
	72001	-0.056	0.232	-0.064	-0.083	-0.016	0.003	0.005	0.002
	72004	-0.058	0.481	-0.097	0.021	-0.027	-0.011	0.010	-0.004
3 Exterior Wall @ EL22.50 ~24.60m	64011	0.055	0.424	0.030	0.184	0.895	0.006	0.006	-0.122
	64019	0.151	0.524	0.057	0.106	0.631	-0.084	-0.102	-0.100
	74001	0.013	0.028	-0.112	-0.083	0.074	0.075	0.037	0.049
	74004	0.074	0.313	-0.072	0.132	0.561	0.097	-0.029	0.114
4 Spent Fuel Pool Wall @ EL-5.10 ~-3.30m	60819	-0.130	1.235	0.305	0.809	0.422	0.189	-0.011	0.076
	70801	-0.114	0.355	-0.035	-0.737	-0.067	0.018	0.367	-0.018
	70804	-0.140	0.742	-0.091	0.356	0.296	-0.048	0.066	-0.040
	110748	-0.119	0.789	0.347	0.104	0.033	0.013	-0.047	0.033
5 Basemat	90306	0.831	0.342	-0.377	-0.717	0.087	-0.126	0.414	-0.937
	90310	0.113	0.081	0.038	0.113	0.109	0.556	-0.161	0.055
	90410	0.352	0.666	-0.331	0.551	-0.129	-1.083	-1.131	-0.053
5 Basemat @ Spent Fuel Pool	90486	0.223	0.456	0.032	-3.144	-2.174	-0.332	0.173	-0.142
	90490	0.289	0.317	-0.118	-0.405	-1.037	-0.309	-1.235	-0.234
	90526	0.239	0.271	0.059	-1.710	-1.031	-0.079	0.226	0.886
6 Slab EL4.65m	93306	-0.124	0.014	-0.053	-0.040	-0.064	-0.010	-0.027	0.132
	93310	-0.021	-0.040	-0.208	-0.041	-0.028	-0.042	0.018	0.002
	93410	-0.284	-0.289	0.275	-0.088	-0.020	0.074	0.047	0.017

Table 3G.3-10

Combined Forces and Moments: Selected Load Combination FB-4

Location	Element ID		Nx (MN/m)	Ny (MN/m)	Nxy (MN/m)	Mx (MNm/m)	My (MNm/m)	Mxy (MNm/m)	Qx (MN/m)	Qy (MN/m)
1 Exterior Wall and Pool Wall @ EL-11.50 ~-10.50m	60011	OTHR	-2.758	-2.156	-0.833	-0.154	-1.181	0.019	-0.066	-0.940
		TEMP	-1.399	0.244	-0.150	1.389	1.248	0.082	-0.323	-0.124
	60219	OTHR	-2.519	-1.987	-0.576	0.103	-0.752	0.146	0.026	-0.857
		TEMP	2.141	-3.473	1.526	-16.532	-22.653	-0.638	-0.009	-2.744
	70201	OTHR	-0.927	-0.381	0.021	-1.345	-0.893	-0.609	0.588	-0.045
		TEMP	2.590	3.915	-1.049	-5.504	-5.911	0.402	-0.198	0.757
	70204	OTHR	-1.295	-1.774	-0.209	0.449	-1.950	-0.415	-0.086	1.941
		TEMP	1.973	1.474	-0.981	-5.183	-6.088	0.322	0.084	0.078
	110718	OTHR	-0.744	-1.072	-0.846	-0.079	0.018	0.047	0.072	0.103
		TEMP	-2.857	-4.097	-1.806	-2.527	-2.904	0.015	0.243	-0.324
2 Exterior Wall @ EL-4.65 ~-6.60m	62011	OTHR	-0.206	-1.133	-0.108	0.033	0.189	0.008	0.000	0.075
		TEMP	7.429	2.426	0.697	-1.402	-1.563	0.008	-0.029	-0.075
	62019	OTHR	-0.339	-0.713	-0.077	0.018	0.120	-0.030	0.012	0.059
		TEMP	10.022	0.294	-2.625	-1.562	-1.942	-0.063	0.045	-0.137
	72001	OTHR	-0.073	-0.262	-0.055	-0.268	-0.039	0.054	0.145	0.026
		TEMP	5.610	-1.657	3.481	-0.530	-1.166	0.047	-0.963	0.332
	72004	OTHR	-0.277	-0.665	-0.069	0.390	0.266	0.053	0.061	-0.165
		TEMP	8.962	1.077	3.662	-1.724	-2.091	0.110	-0.068	0.213
3 Exterior Wall @ EL22.50 ~24.60m	64011	OTHR	0.261	-0.308	-0.066	-0.123	-0.586	0.002	-0.002	0.068
		TEMP	5.619	0.223	0.312	-1.261	-0.544	-0.026	-0.006	-0.099
	64019	OTHR	0.005	-0.413	-0.082	-0.069	-0.408	0.056	0.067	0.054
		TEMP	6.640	1.810	1.921	-1.323	-0.590	0.031	-0.009	-0.068
	74001	OTHR	-0.023	-0.057	0.119	0.057	-0.051	-0.042	-0.032	-0.029
		TEMP	3.770	-0.975	-4.229	-0.993	-0.606	0.162	-0.381	0.129
	74004	OTHR	-0.024	-0.227	0.085	-0.084	-0.383	-0.062	0.018	-0.061
		TEMP	5.254	0.289	-4.060	-1.230	-0.396	-0.031	0.029	0.115
4 Spent Fuel Pool Wall @ EL-5.10 ~-3.30m	60819	OTHR	-2.105	-1.486	-0.681	0.638	1.076	0.113	0.184	-0.012
		TEMP	-2.782	-4.484	-0.289	-13.307	-12.914	-1.206	-0.062	-1.487
	70801	OTHR	-1.408	-0.700	-0.086	-3.528	-0.259	-0.424	2.180	-0.351
		TEMP	0.397	4.656	-0.384	-5.261	-5.277	0.027	0.021	-0.027
	70804	OTHR	-1.218	-1.095	-0.090	2.790	1.830	-0.341	0.325	0.256
		TEMP	-0.972	0.944	0.201	-5.140	-5.323	0.365	-0.042	0.181
	110748	OTHR	-0.545	-0.664	-0.428	-0.053	-0.042	-0.068	0.102	-0.059
		TEMP	-0.574	-3.683	-1.399	-1.735	-2.298	-0.112	0.476	-0.198
5 Basemat	90306	OTHR	-4.303	-3.072	0.792	0.964	-0.800	0.428	-0.607	1.572
		TEMP	-0.551	-0.079	0.609	2.135	1.086	0.301	-0.278	0.264
	90310	OTHR	-2.506	-2.554	0.254	-0.649	-0.532	-0.047	0.392	0.183
		TEMP	0.239	0.313	0.518	1.691	1.777	0.959	0.054	-0.064
	90410	OTHR	-3.284	-5.447	0.721	-2.048	-0.018	1.721	1.708	-0.343
		TEMP	-0.173	-0.844	0.141	0.811	2.381	-0.132	-0.103	-0.121
5 Basemat @ Spent Fuel Pool	90486	OTHR	-3.441	-5.730	-0.324	3.049	1.537	-0.129	-0.140	-0.216
		TEMP	-4.244	-2.720	0.470	-24.557	-25.455	2.673	-0.139	0.534
	90490	OTHR	-3.543	-4.698	0.200	-1.337	0.792	0.349	1.532	-0.327
		TEMP	-3.300	3.303	0.448	-29.781	-29.188	0.728	2.617	2.051
	90526	OTHR	-4.261	-6.627	-0.403	0.647	-5.564	-0.297	-0.207	-1.875
		TEMP	3.535	0.045	-0.194	-25.792	-9.116	0.463	-1.405	2.015
6 Slab EL4.65m	93306	OTHR	0.041	-0.230	-0.085	0.099	0.165	0.016	0.034	-0.158
		TEMP	-1.235	-0.073	-1.154	-0.070	0.029	-0.024	0.086	-0.038
	93310	OTHR	-0.038	-0.035	0.139	0.092	0.042	0.011	-0.050	0.004
		TEMP	-2.819	-2.798	-3.576	-0.996	-1.005	-0.291	0.362	0.365
	93410	OTHR	-0.052	-0.174	0.009	0.221	0.058	-0.047	-0.099	-0.017
		TEMP	-0.718	-3.379	-0.128	-0.172	-0.035	0.000	-0.089	-0.038

OTHR: Loads other than thermal loads
TEMP: Thermal loads

Table 3G.3-11

Combined Forces and Moments: Selected Load Combination FB-8

Location	Element ID		Nx (MN/m)	Ny (MN/m)	Nxy (MN/m)	Mx (MNm/m)	My (MNm/m)	Mxy (MNm/m)	Qx (MN/m)	Qy (MN/m)
1 Exterior Wall and Pool Wall @ EL-11.50 ~-10.50m	60011	OTHR	-2.174	-2.012	-0.749	-0.156	-1.171	0.013	-0.079	-0.817
		TEMP	-1.384	0.477	-0.339	1.280	1.116	0.111	-0.386	-0.113
		HYDR	0.343	0.293	0.291	0.021	0.118	0.009	0.011	0.040
	60219	OTHR	-1.833	-1.807	-0.485	-0.058	-0.764	0.069	0.027	-0.605
		TEMP	0.346	-3.904	1.390	-22.210	-29.543	-0.705	0.040	-3.334
		HYDR	0.317	0.588	0.207	0.084	0.203	0.013	0.007	0.035
	70201	OTHR	-0.655	-0.305	0.030	-0.934	-0.688	-0.446	0.399	-0.021
		TEMP	1.886	3.103	-2.082	-9.857	-9.800	0.485	0.113	0.812
		HYDR	0.010	0.175	0.191	0.016	0.053	0.003	0.023	0.017
	70204	OTHR	-0.910	-1.539	-0.121	0.304	-1.512	-0.294	-0.067	1.423
		TEMP	0.054	1.309	-1.353	-8.600	-9.704	0.357	0.163	0.084
		HYDR	0.094	0.569	0.366	0.044	0.100	0.012	0.002	0.023
	110718	OTHR	-0.528	-1.089	-0.693	-0.070	0.032	0.037	0.062	0.118
		TEMP	-5.215	-5.510	-2.744	-4.390	-4.955	0.047	0.412	-0.504
		HYDR	0.159	0.275	0.063	0.016	0.037	0.002	0.004	0.018
2 Exterior Wall @ EL-4.65 ~-6.60m	62011	OTHR	-0.166	-1.130	-0.068	0.029	0.147	0.007	0.002	0.055
		TEMP	5.792	2.205	0.857	-1.050	-1.212	0.013	-0.038	-0.053
		HYDR	0.101	0.076	0.187	0.003	0.012	0.001	0.004	0.003
	62019	OTHR	-0.258	-0.686	-0.077	0.008	0.087	-0.026	0.008	0.040
		TEMP	8.979	0.020	-2.349	-1.303	-1.808	-0.089	0.056	-0.166
		HYDR	0.061	0.126	0.193	0.003	0.011	0.001	0.001	0.002
	72001	OTHR	-0.044	-0.183	-0.013	-0.199	-0.029	0.034	0.117	0.018
		TEMP	6.347	-1.049	3.952	0.062	-0.998	0.052	-1.303	0.473
		HYDR	0.023	0.198	0.270	0.007	0.005	0.001	0.002	0.004
	72004	OTHR	-0.200	-0.583	-0.013	0.302	0.201	0.036	0.044	-0.113
		TEMP	8.900	0.584	3.462	-1.667	-2.299	0.138	-0.101	0.338
		HYDR	0.052	0.190	0.321	0.004	0.006	0.001	0.001	0.001
3 Exterior Wall @ EL22.50 ~24.60m	64011	OTHR	-0.006	-0.326	-0.057	-0.121	-0.598	0.001	-0.002	0.083
		TEMP	4.711	0.191	0.358	-0.959	-0.381	-0.033	-0.012	-0.085
		HYDR	0.344	0.002	0.133	0.005	0.015	0.002	0.001	0.002
	64019	OTHR	-0.160	-0.426	-0.136	-0.067	-0.419	0.052	0.067	0.067
		TEMP	5.437	1.415	1.717	-1.028	-0.428	0.049	0.002	-0.056
		HYDR	0.254	0.011	0.101	0.005	0.011	0.004	0.002	0.002
	74001	OTHR	-0.036	-0.042	0.156	0.045	-0.056	-0.036	-0.028	-0.028
		TEMP	2.923	-0.822	-3.513	-0.721	-0.452	0.098	-0.293	0.081
		HYDR	0.020	0.018	0.092	0.009	0.004	0.004	0.005	0.003
	74004	OTHR	-0.105	-0.239	0.176	-0.084	-0.400	-0.055	0.014	-0.080
		TEMP	4.106	0.207	-3.618	-0.945	-0.256	-0.054	0.039	0.093
		HYDR	0.118	0.009	0.173	0.003	0.004	0.004	0.001	0.001
4 Spent Fuel Pool Wall @ EL-5.10 ~-3.30m	60819	OTHR	-1.496	-1.381	-0.595	0.277	0.635	0.027	0.139	-0.023
		TEMP	-2.264	-4.358	-0.357	-18.258	-17.484	-1.137	-0.079	-1.940
		HYDR	0.057	0.403	0.247	0.083	0.054	0.022	0.009	0.015
	70801	OTHR	-0.949	-0.537	-0.044	-2.507	-0.190	-0.332	1.569	-0.269
		TEMP	-0.192	3.118	-0.554	-9.534	-8.830	0.036	0.338	0.094
		HYDR	0.028	0.219	0.302	0.036	0.010	0.009	0.012	0.005
	70804	OTHR	-0.811	-0.983	-0.028	2.046	1.302	-0.251	0.231	0.205
		TEMP	-1.696	0.628	0.018	-8.487	-8.519	0.490	0.004	0.347
		HYDR	0.051	0.378	0.366	0.033	0.015	0.017	0.003	0.010
	110748	OTHR	-0.380	-0.726	-0.446	-0.079	-0.049	-0.053	0.092	-0.050
		TEMP	-1.028	-5.130	-1.753	-3.188	-4.057	-0.239	0.788	-0.280
		HYDR	0.060	0.095	0.068	0.010	0.010	0.015	0.002	0.006

OTHR: Loads other than thermal and hydrodynamic loads
TEMP: Thermal loads
HYDR: Hydrodynamic loads

Table 3G.3-11

Combined Forces and Moments: Selected Load Combination FB-8 (Continued)

Location	Element ID		Nx (MN/m)	Ny (MN/m)	Nxy (MN/m)	Mx (MNm/m)	My (MNm/m)	Mxy (MNm/m)	Qx (MN/m)	Qy (MN/m)
5 Basemat	90306	OTHR	-3.553	-2.445	0.667	0.917	-0.660	0.318	-0.535	1.428
		TEMP	-0.891	-0.104	0.374	1.773	0.777	0.094	-0.041	0.263
		HYDR	0.379	0.165	0.412	0.357	0.091	0.349	0.331	0.408
	90310	OTHR	-1.959	-1.980	0.183	-0.545	-0.443	-0.171	0.345	0.118
		TEMP	0.146	0.250	0.330	1.230	1.339	0.636	0.137	-0.030
		HYDR	0.052	0.139	0.022	0.062	0.063	0.144	0.111	0.142
	90410	OTHR	-2.639	-4.291	0.681	-1.812	-0.001	1.618	1.590	-0.271
		TEMP	-0.178	-1.176	0.355	0.552	2.044	0.015	-0.255	-0.326
		HYDR	0.071	0.650	0.200	0.146	0.116	0.471	0.230	0.146
5 Basemat @ Spent Fuel Pool	90486	OTHR	-2.601	-4.362	-0.196	3.036	1.609	0.001	-0.098	-0.152
		TEMP	-4.328	-1.550	0.543	-31.929	-31.367	2.927	-0.234	0.718
		HYDR	0.158	0.207	0.127	1.680	1.236	0.208	0.129	0.088
	90490	OTHR	-2.642	-3.498	0.202	-0.805	0.804	0.383	1.388	-0.178
		TEMP	-4.114	1.286	0.657	-38.413	-34.888	0.923	2.994	2.034
		HYDR	0.057	0.699	0.167	0.334	0.711	0.173	0.524	0.090
	90526	OTHR	-3.184	-4.998	-0.258	0.875	-3.886	-0.137	-0.182	-1.581
		TEMP	5.653	0.288	-0.632	-32.497	-12.815	0.082	-1.429	2.332
		HYDR	0.271	0.062	0.398	0.923	0.352	0.426	0.198	0.477
6 Slab EL4.65m	93306	OTHR	0.053	-0.186	-0.138	0.087	0.129	0.012	0.034	-0.142
		TEMP	-0.809	-0.029	-1.613	-0.049	0.041	-0.014	0.079	-0.032
		HYDR	0.184	0.036	0.234	0.034	0.041	0.003	0.008	0.008
	93310	OTHR	-0.037	-0.027	0.108	0.078	0.036	0.013	-0.045	0.002
		TEMP	-2.213	-2.170	-3.182	-0.748	-0.783	-0.241	0.266	0.291
		HYDR	0.035	0.026	0.060	0.032	0.030	0.004	0.034	0.031
	93410	OTHR	-0.016	-0.085	-0.074	0.165	0.045	-0.049	-0.073	-0.015
		TEMP	-0.508	-2.745	-0.501	-0.023	-0.030	0.015	-0.142	-0.048
		HYDR	0.017	0.128	0.106	0.023	0.007	0.012	0.016	0.001

Table 3G.3-12

Combined Forces and Moments: Selected Load Combination FB-9

Location	Element ID		Nx (MN/m)	Ny (MN/m)	Nxy (MN/m)	Mx (MNm/m)	My (MNm/m)	Mxy (MNm/m)	Qx (MN/m)	Qy (MN/m)
1 Exterior Wall and Pool Wall @ EL-11.50 ~-10.50m	60011	OTHR	-2.173	-2.002	-0.745	-0.154	-1.158	0.012	-0.076	-0.809
		TEMP	-1.384	0.477	-0.339	1.280	1.116	0.111	-0.386	-0.113
		SEIS	5.340	4.432	6.312	0.268	1.599	0.163	0.152	0.708
		HYDR	0.241	0.207	0.204	0.015	0.085	0.007	0.008	0.029
	60219	OTHR	-1.833	-1.806	-0.485	-0.058	-0.764	0.071	0.027	-0.605
		TEMP	0.346	-3.904	1.390	-22.210	-29.543	-0.705	0.040	-3.334
		SEIS	5.241	9.790	4.701	2.774	5.361	0.727	0.311	2.090
		HYDR	0.224	0.415	0.145	0.059	0.141	0.008	0.005	0.024
	70201	OTHR	-0.655	-0.308	0.033	-0.935	-0.688	-0.446	0.400	-0.021
		TEMP	1.886	3.103	-2.082	-9.857	-9.800	0.485	0.113	0.812
		SEIS	0.521	3.113	3.160	1.159	1.102	0.682	0.583	0.327
		HYDR	0.007	0.122	0.136	0.011	0.038	0.002	0.016	0.012
	70204	OTHR	-0.915	-1.537	-0.118	0.305	-1.510	-0.295	-0.067	1.422
		TEMP	0.054	1.309	-1.353	-8.600	-9.704	0.357	0.163	0.084
		SEIS	2.326	9.215	5.539	0.822	2.462	0.477	0.077	1.441
		HYDR	0.067	0.403	0.260	0.031	0.071	0.008	0.001	0.016
	110718	OTHR	-0.527	-1.086	-0.689	-0.070	0.031	0.038	0.062	0.117
		TEMP	-5.215	-5.510	-2.744	-4.390	-4.955	0.047	0.412	-0.504
		SEIS	3.270	4.733	2.813	0.389	0.835	0.103	0.088	0.532
		HYDR	0.114	0.194	0.045	0.011	0.026	0.002	0.003	0.013
2 Exterior Wall @ EL-4.65 ~-6.60m	62011	OTHR	-0.164	-1.119	-0.067	0.030	0.151	0.008	0.002	0.056
		TEMP	5.792	2.205	0.857	-1.050	-1.212	0.013	-0.038	-0.053
		SEIS	1.289	1.695	4.101	0.198	0.724	0.030	0.041	0.303
		HYDR	0.072	0.054	0.130	0.002	0.008	0.000	0.003	0.002
	62019	OTHR	-0.257	-0.685	-0.076	0.008	0.089	-0.026	0.009	0.040
		TEMP	8.979	0.020	-2.349	-1.303	-1.808	-0.089	0.056	-0.166
		SEIS	1.107	2.253	3.383	0.249	0.470	0.146	0.051	0.144
		HYDR	0.043	0.088	0.135	0.002	0.008	0.001	0.000	0.001
	72001	OTHR	-0.044	-0.199	-0.005	-0.199	-0.029	0.034	0.117	0.018
		TEMP	6.347	-1.049	3.952	0.062	-0.998	0.052	-1.303	0.473
		SEIS	0.741	2.589	4.297	0.472	0.159	0.128	0.214	0.078
		HYDR	0.016	0.138	0.191	0.005	0.004	0.001	0.001	0.003
	72004	OTHR	-0.197	-0.588	0.000	0.302	0.201	0.036	0.044	-0.113
		TEMP	8.900	0.584	3.462	-1.667	-2.299	0.138	-0.101	0.338
		SEIS	1.039	3.209	4.682	0.481	0.640	0.091	0.085	0.336
		HYDR	0.037	0.133	0.227	0.002	0.004	0.001	0.001	0.001
3 Exterior Wall @ EL22.50 ~24.60m	64011	OTHR	0.046	-0.326	-0.060	-0.123	-0.604	0.001	-0.002	0.084
		TEMP	4.711	0.191	0.358	-0.959	-0.381	-0.033	-0.012	-0.085
		SEIS	3.879	0.468	2.053	0.194	0.906	0.035	0.018	0.201
		HYDR	0.242	0.001	0.092	0.004	0.011	0.001	0.001	0.001
	64019	OTHR	-0.130	-0.425	-0.116	-0.068	-0.422	0.052	0.067	0.068
		TEMP	5.437	1.415	1.717	-1.028	-0.428	0.049	0.002	-0.056
		SEIS	2.950	0.539	1.577	0.118	0.656	0.185	0.114	0.103
		HYDR	0.178	0.008	0.070	0.004	0.008	0.002	0.002	0.002
	74001	OTHR	-0.032	-0.047	0.145	0.046	-0.055	-0.037	-0.029	-0.028
		TEMP	2.923	-0.822	-3.513	-0.721	-0.452	0.098	-0.293	0.081
		SEIS	0.238	0.290	1.163	0.139	0.098	0.175	0.075	0.060
		HYDR	0.014	0.013	0.064	0.006	0.003	0.003	0.003	0.002
	74004	OTHR	-0.081	-0.240	0.152	-0.085	-0.401	-0.056	0.014	-0.080
		TEMP	4.106	0.207	-3.618	-0.945	-0.256	-0.054	0.039	0.093
		SEIS	1.903	0.434	1.829	0.141	0.564	0.135	0.055	0.175
		HYDR	0.083	0.006	0.121	0.002	0.003	0.003	0.001	0.001

OTHR: Loads other than thermal, seismic and hydrodynamic loads
TEMP: Thermal loads
SEIS: Seismic loads
HYDR: Hydrodynamic loads

Table 3G.3-12

Combined Forces and Moments: Selected Load Combination FB-9 (Continued)

Location	Element ID		Nx (MN/m)	Ny (MN/m)	Nxy (MN/m)	Mx (MNm/m)	My (MNm/m)	Mxy (MNm/m)	Qx (MN/m)	Qy (MN/m)
4 Spent Fuel Pool Wall @ EL-5.10 ~-3.30m	60819	OTHR	-1.497	-1.379	-0.595	0.276	0.636	0.030	0.139	-0.023
		TEMP	-2.264	-4.358	-0.357	-18.258	-17.484	-1.137	-0.079	-1.940
		SEIS	2.656	6.814	4.604	5.026	2.489	0.669	0.362	0.792
		HYDR	0.039	0.284	0.174	0.058	0.037	0.016	0.006	0.011
	70801	OTHR	-0.950	-0.543	-0.038	-2.509	-0.190	-0.332	1.570	-0.269
		TEMP	-0.192	3.118	-0.554	-9.534	-8.830	0.036	0.338	0.094
		SEIS	1.892	3.601	4.599	3.498	0.454	0.671	2.033	0.503
		HYDR	0.019	0.153	0.214	0.025	0.007	0.006	0.009	0.003
	70804	OTHR	-0.818	-0.980	-0.018	2.046	1.302	-0.251	0.231	0.205
		TEMP	-1.696	0.628	0.018	-8.487	-8.519	0.490	0.004	0.347
		SEIS	2.282	6.197	5.211	2.893	1.577	0.494	0.308	0.468
		HYDR	0.036	0.267	0.261	0.023	0.011	0.012	0.002	0.007
	110748	OTHR	-0.380	-0.723	-0.443	-0.078	-0.049	-0.053	0.092	-0.050
		TEMP	-1.028	-5.130	-1.753	-3.188	-4.057	-0.239	0.788	-0.280
		SEIS	1.832	2.310	2.172	0.219	0.198	0.216	0.130	0.104
		HYDR	0.043	0.066	0.049	0.007	0.007	0.011	0.001	0.004
5 Basemat	90306	OTHR	-3.543	-2.443	0.668	0.916	-0.652	0.320	-0.537	1.426
		TEMP	-0.891	-0.104	0.374	1.773	0.777	0.094	-0.041	0.263
		SEIS	7.568	2.347	5.652	5.383	2.007	5.199	4.883	6.009
		HYDR	0.266	0.117	0.292	0.253	0.065	0.246	0.234	0.289
	90310	OTHR	-1.959	-1.978	0.184	-0.542	-0.440	-0.170	0.344	0.114
		TEMP	0.146	0.250	0.330	1.230	1.339	0.636	0.137	-0.030
		SEIS	1.160	1.886	0.486	1.285	1.047	2.093	2.187	2.493
		HYDR	0.036	0.099	0.016	0.044	0.045	0.102	0.078	0.100
	90410	OTHR	-2.629	-4.289	0.675	-1.785	0.001	1.614	1.583	-0.271
		TEMP	-0.178	-1.176	0.355	0.552	2.044	0.015	-0.255	-0.326
		SEIS	0.937	9.268	5.001	2.443	2.322	8.518	3.315	3.953
		HYDR	0.050	0.457	0.140	0.106	0.081	0.332	0.163	0.102
5 Basemat @ Spent Fuel Pool	90486	OTHR	-2.595	-4.368	-0.203	3.007	1.602	-0.006	-0.107	-0.148
		TEMP	-4.328	-1.550	0.543	-31.929	-31.367	2.927	-0.234	0.718
		SEIS	2.384	3.292	2.327	23.723	19.662	2.721	2.561	2.077
		HYDR	0.113	0.145	0.089	1.198	0.875	0.148	0.090	0.061
	90490	OTHR	-2.642	-3.498	0.201	-0.806	0.803	0.375	1.387	-0.183
		TEMP	-4.114	1.286	0.657	-38.413	-34.888	0.923	2.994	2.034
		SEIS	1.131	9.545	4.262	12.359	11.532	4.673	8.620	2.290
		HYDR	0.040	0.495	0.117	0.237	0.504	0.121	0.370	0.063
	90526	OTHR	-3.186	-4.998	-0.260	0.863	-3.884	-0.142	-0.183	-1.579
		TEMP	5.653	0.288	-0.632	-32.497	-12.815	0.082	-1.429	2.332
		SEIS	5.718	1.045	5.949	15.115	11.110	6.772	3.246	7.506
		HYDR	0.192	0.044	0.282	0.655	0.248	0.301	0.141	0.339
6 Slab EL4.65m	93306	OTHR	0.051	-0.187	-0.110	0.086	0.128	0.012	0.034	-0.141
		TEMP	-0.809	-0.029	-1.613	-0.049	0.041	-0.014	0.079	-0.032
		SEIS	2.686	0.414	1.040	0.523	0.628	0.036	0.125	0.195
		HYDR	0.129	0.026	0.171	0.024	0.029	0.002	0.005	0.006
	93310	OTHR	-0.034	-0.026	0.124	0.076	0.036	0.014	-0.043	0.002
		TEMP	-2.213	-2.170	-3.182	-0.748	-0.783	-0.241	0.266	0.291
		SEIS	0.796	0.550	1.111	0.582	0.441	0.065	0.528	0.489
		HYDR	0.024	0.018	0.044	0.023	0.022	0.003	0.024	0.022
	93410	OTHR	-0.010	-0.086	-0.080	0.163	0.045	-0.050	-0.072	-0.015
		TEMP	-0.508	-2.745	-0.501	-0.023	-0.030	0.015	-0.142	-0.048
		SEIS	0.404	1.269	0.975	0.532	0.150	0.196	0.294	0.022
		HYDR	0.013	0.091	0.076	0.017	0.005	0.008	0.011	0.001

Table 3G.3-13

Sectional Thicknesses and Rebar Ratios Used in the Evaluation

Location	Element ID	Thickness (m)	Primary Reinforcement					Shear Tie	
			Position	Direction 1*1		Direction 2*1			
				Arrangement	Ratio (%)	Arrangement	Ratio (%)	Arrangement	Ratio (%)
1 Exterior Wall and Pool Wall @ EL-11.50 ~-10.50m	60011	2.0	Inside	3-#11@200	0.755	3-#11@200	0.755	#6@400x400	0.177
			Outside	3-#11@200	0.755	3-#11@200	0.755		
	60219	3.6	Inside	3-#11@200	0.419	3-#11@200 (+2-#11@200)	0.699	#6@400x400	0.177
			Outside	3-#11@200	0.419	3-#11@200 (+2-#11@200)	0.699		
	70201	2.0	Inside	4-#11@200	1.006	4-#11@200	1.006	#6@400x400	0.177
			Outside	4-#11@200	1.006	4-#11@200	1.006		
	70204	2.0	Inside	4-#11@200	1.006	4-#11@200	1.006	#6@200x200	0.710
			Outside	4-#11@200	1.006	4-#11@200 (+2-#11@200)	1.510		
	110718	1.5	Inside	2-#11@200	0.671	3-#11@200 (+1-#11@200)	1.342	#6@400x200	0.355
			Outside	2-#11@200	0.671	3-#11@200 (+1-#11@200)	1.342		
2 Exterior Wall @ EL4.65 ~6.60m	62011 62019	1.0	Inside	2-#11@200	1.006	2-#11@200	1.006	#5@400x400	0.125
			Outside	3-#11@200	1.510	3-#11@200	1.510		
	72001	1.0	Inside	2-#11@200	1.006	2-#11@200	1.006	#5@400x200	0.250
			Outside	3-#11@200	1.510	3-#11@200	1.510		
	72004	1.0	Inside	2-#11@200	1.006	2-#11@200 (+1-#11@200)	1.510	#5@400x400	0.125
			Outside	3-#11@200	1.510	3-#11@200	1.510		
3 Exterior Wall @ EL22.50 ~24.60m	64011	1.0	Inside	2-#11@200	1.006	2-#11@200	1.006	#5@400x400	0.125
			Outside	2-#11@200 (+1-#11@200)	1.510	2-#11@200 (+1-#11@200)	1.510		
	64019	1.0	Inside	2-#11@200	1.006	2-#11@200	1.006	#5@400x400	0.125
			Outside	2-#11@200	1.006	2-#11@200	1.006		
	74001 74004	1.0	Inside	2-#11@200	1.006	2-#11@200	1.006	#5@400x400	0.125
			Outside	3-#11@200	1.510	3-#11@200	1.510		

Note *1: Exterior Wall, Pool Wall Direction 1: Horizontal Direction 2: Vertical
Basemat, Slab Direction 1: N-S Direction 2: E-W
Note *2: Rebar in parenthesis indicates additional bars locally required.

Table 3G.3-13

Sectional Thicknesses and Rebar Ratios Used in the Evaluation (Continued)

Location	Element ID	Thickness (m)	Primary Reinforcement					Shear Tie	
			Position	Direction 1*1		Direction 2*1			
				Arrangement	Ratio (%)	Arrangement	Ratio (%)	Arrangement	Ratio (%)
4 Spent Fuel Pool Wall @ EL-5.10 ~-3.30m	60819	3.6	Inside	3-#11@200	0.419	3-#11@200	0.419	#6@400x400	0.177
			Outside	3-#11@200	0.419	3-#11@200	0.419		
	70801	2.0	Inside	4-#11@200	1.006	4-#11@200	1.006	#6@200x200	0.710
			Outside	4-#11@200	1.006	4-#11@200	1.006		
	70804	2.0	Inside	4-#11@200	1.006	4-#11@200	1.006	#6@400x400	0.177
			Outside	4-#11@200	1.006	4-#11@200	1.006		
	110748	1.5	Inside	2-#11@200	0.671	3-#11@200	1.006	#6@400x400	0.177
			Outside	2-#11@200	0.671	3-#11@200	1.006		
5 Basemat	90306 90310 90410	4.0	Top	4-#11@200	0.503	4-#11@200	0.503	#11@400x400	0.629
			Bottom	5-#11@200	0.629	5-#11@200	0.629		
5 Basemat @ Spent Fuel Pool	90486	5.5	Top	4-#11@200 (+2-#11@200)	0.549	4-#11@200 (+2-#11@200)	0.549	#11@600x400	0.419
			Bottom	5-#11@200	0.457	5-#11@200	0.457		
	90490 90526	5.5	Top	4-#11@200 (+2-#11@200)	0.549	4-#11@200 (+2-#11@200)	0.549	#11@400x400	0.629
			Bottom	5-#11@200	0.457	5-#11@200	0.457		
6 Slab EL4.65m	93306 93310 93410	1.3	Top	2-#11@200	0.774	2-#11@200	0.774	#5@200x200	0.500
			Bottom	2-#11@200	0.774	2-#11@200	0.774		

Note *1: Exterior Wall, Pool Wall Direction 1: Horizontal Direction 2: Vertical
Basemat, Slab Direction 1: N-S Direction 2: E-W
Note *2: Rebar in parenthesis indicates additional bars locally required.

Table 3G.3-14

Rebar and Concrete Stresses: Selected Load Combination FB-4

Location	Element ID	Concrete Stress (MPa)		Primary Reinforcement Stress (MPa)				
		Calculated	Allowable	Calculated				Allowable
				Direction 1*		Direction 2*		
				In/Top	Out/Bottom	In/Top	Out/Bottom	
1 Exterior Wall and Pool Wall @ EL-11.50 ~-10.50m	60011	-3.6	-29.3	-4.1	-20.9	-4.8	-3.4	372.2
	60219	-6.5	-29.3	-6.5	14.8	-29.6	60.6	372.2
	70201	-10.5	-29.3	-5.0	122.0	2.9	126.3	372.2
	70204	-9.0	-29.3	-1.0	15.3	-26.9	82.8	372.2
	110718	-11.3	-29.3	-16.3	84.8	-26.2	48.4	372.2
2 Exterior Wall @ EL4.65 ~6.60m	62011	-3.0	-29.3	36.5	84.3	-11.2	27.7	372.2
	62019	-10.2	-29.3	51.9	114.9	-26.3	77.7	372.2
	72001	-9.5	-29.3	22.5	108.5	-20.1	80.1	372.2
	72004	-6.7	-29.3	62.5	44.5	5.2	26.8	372.2
3 Exterior Wall @ EL22.50 ~24.60m	64011	-8.4	-29.3	25.7	101.7	-18.6	66.4	372.2
	64019	-8.4	-29.3	41.2	152.5	-9.1	117.7	372.2
	74001	-4.6	-29.3	23.6	93.7	3.3	80.3	372.2
	74004	-7.5	-29.3	13.7	108.2	1.8	116.5	372.2
4 Spent Fuel Pool Wall @ EL-5.10 ~-3.30m	60819	-4.6	-29.3	-17.8	14.3	-20.9	14.2	372.2
	70801	-12.8	-29.3	-26.1	138.5	11.2	62.6	372.2
	70804	-2.4	-29.3	-11.4	0.6	-2.3	3.8	372.2
	110748	-8.8	-29.3	0.6	57.8	-32.1	33.7	372.2
5 Basemat	90306	-2.1	-23.5	-2.5	-13.7	-5.0	-3.8	372.2
	90310	-0.8	-23.5	-2.6	-4.6	-2.1	-4.9	372.2
	90410	-2.3	-23.5	-7.7	-1.3	-5.7	-15.4	372.2
5 Basemat @ Spent Fuel Pool	90486	-4.0	-23.5	-12.9	8.3	-16.1	8.6	372.2
	90490	-4.2	-23.5	-13.2	23.1	-4.7	11.7	372.2
	90526	-3.1	-23.5	-3.2	12.8	-14.0	4.4	372.2
6 Slab EL4.65m	93306	-1.8	-29.3	18.0	3.9	41.7	4.9	372.2
	93310	-7.5	-29.3	-12.4	53.3	-14.1	56.6	372.2
	93410	-2.6	-29.3	-0.4	-1.8	-16.8	-17.3	372.2

Note: Negative value means compression.
Note *: Exterior Wall, Pool Wall Direction 1: Horizontal, Direction 2: Vertical
Basemat, Slab Direction 1: N-S, Direction 2: E-W

Table 3G.3-15

Rebar and Concrete Stresses: Selected Load Combination FB-8

Location	Element ID	Concrete Stress (MPa)		Primary Reinforcement Stress (MPa)				
		Calculated	Allowable	Calculated				Allowable
				Direction 1*		Direction 2*		
				In/Top	Out/Bottom	In/Top	Out/Bottom	
1 Exterior Wall and Pool Wall @ EL-11.50 ~-10.50m	60011	-3.5	-29.3	-3.7	-19.7	-6.2	-1.8	372.2
	60219	-8.3	-28.5	-12.0	47.3	-35.5	95.4	366.4
	70201	-11.5	-28.3	-7.7	126.7	-3.4	136.2	364.6
	70204	-11.6	-28.3	-8.4	63.3	-33.3	118.7	364.6
	110718	-17.9	-28.1	-32.7	146.0	-34.3	91.8	363.3
2 Exterior Wall @ EL4.65 ~6.60m	62011	-3.7	-29.3	40.2	65.6	-19.6	26.9	372.2
	62019	-10.4	-29.3	53.7	105.7	-28.0	80.0	372.2
	72001	-7.4	-29.3	40.8	92.8	-23.4	89.2	372.2
	72004	-11.3	-29.3	86.6	83.2	-49.9	99.2	372.2
3 Exterior Wall @ EL22.50 ~24.60m	64011	-8.5	-29.3	29.0	92.7	-17.8	68.7	372.2
	64019	-6.6	-29.3	37.4	94.6	-5.8	75.2	372.2
	74001	-4.0	-29.3	23.5	77.3	4.8	67.8	372.2
	74004	-6.1	-29.3	13.0	100.0	4.0	97.9	372.2
4 Spent Fuel Pool Wall @ EL-5.10 ~-3.30m	60819	-5.3	-28.5	-16.6	38.0	-22.8	34.9	366.4
	70801	-14.5	-28.3	-26.8	167.9	2.6	100.0	364.6
	70804	-4.7	-28.3	-15.1	23.2	-8.2	40.1	364.6
	110748	-13.8	-28.1	1.0	102.5	-44.9	70.3	363.3
5 Basemat	90306	-2.2	-23.5	-2.4	-14.3	-3.9	-3.3	372.2
	90310	-0.7	-23.5	-2.1	-3.9	-1.4	-4.3	372.2
	90410	-2.2	-23.5	-6.9	-0.8	-5.9	-14.9	372.2
5 Basemat @ Spent Fuel Pool	90486	-4.3	-22.9	-11.8	21.9	-12.0	19.9	367.2
	90490	-4.7	-22.9	-10.9	39.2	-6.7	18.0	367.2
	90526	-2.8	-22.9	0.4	24.4	-11.1	10.2	367.2
6 Slab EL4.65m	93306	-2.4	-29.3	49.8	27.5	70.5	33.0	372.2
	93310	-6.1	-29.3	-5.7	55.3	-7.6	59.6	372.2
	93410	-2.4	-29.3	14.9	-2.5	-12.2	-14.9	372.2

Note: Negative value means compression.
Note *: Exterior Wall, Pool Wall Direction 1: Horizontal, Direction 2: Vertical
Basemat, Slab Direction 1: N-S, Direction 2: E-W

Table 3G.3-16

Rebar and Concrete Stresses: Selected Load Combination FB-9

Location	Element ID	Concrete Stress (MPa)		Primary Reinforcement Stress (MPa)				
		Calculated	Allowable	Calculated				Allowable
				Direction 1*		Direction 2*		
				In/Top	Out/Bottom	In/Top	Out/Bottom	
1 Exterior Wall and Pool Wall @ EL-11.50 ~-10.50m	60011	-8.9	-29.3	267.5	194.3	338.6	200.3	372.2
	60219	-13.3	-28.5	226.1	300.9	141.5	303.1	366.4
	70201	-9.1	-28.3	18.8	241.5	55.4	297.6	364.6
	70204	-18.5	-28.3	121.4	201.6	232.9	278.5	364.6
	110718	-22.7	-28.1	-44.5	151.5	-55.4	90.9	363.3
2 Exterior Wall @ EL4.65 ~6.60m	62011	-9.3	-29.3	214.9	241.9	322.8	240.7	372.2
	62019	-13.2	-29.3	165.6	252.3	144.1	195.7	372.2
	72001	-15.3	-29.3	158.9	276.9	75.8	198.1	372.2
	72004	-16.1	-29.3	255.1	316.9	130.3	283.0	372.2
3 Exterior Wall @ EL22.50 ~24.60m	64011	-26.7	-29.3	161.9	301.7	91.9	274.6	372.2
	64019	-7.1	-29.3	233.3	284.5	105.5	231.4	372.2
	74001	-8.2	-29.3	68.5	103.3	52.9	89.5	372.2
	74004	-9.4	-29.3	139.1	217.4	-31.1	222.5	372.2
4 Spent Fuel Pool Wall @ EL-5.10 ~-3.30m	60819	-8.9	-28.5	154.5	152.5	125.7	277.1	366.4
	70801	-22.3	-28.3	36.9	333.9	88.0	272.9	364.6
	70804	-12.6	-28.3	232.6	130.2	279.2	210.5	364.6
	110748	-16.3	-28.1	9.2	114.5	-53.2	78.0	363.3
5 Basemat	90306	-10.4	-23.5	197.2	116.9	198.3	56.1	372.2
	90310	-3.2	-23.5	13.2	21.5	24.1	23.1	372.2
	90410	-11.1	-23.5	264.6	-25.0	235.6	113.2	372.2
5 Basemat @ Spent Fuel Pool	90486	-12.8	-22.9	121.5	163.6	116.2	122.0	367.2
	90490	-9.7	-22.9	94.8	127.7	268.3	41.0	367.2
	90526	-8.4	-22.9	333.0	100.3	190.0	106.8	367.2
6 Slab EL4.65m	93306	-5.5	-29.3	56.7	156.2	125.0	80.1	372.2
	93310	-9.2	-29.3	22.9	119.8	11.9	120.6	372.2
	93410	-5.8	-29.3	84.8	42.8	13.1	-19.8	372.2

Note: Negative value means compression.
Note *: Exterior Wall, Pool Wall Direction 1: Horizontal, Direction 2: Vertical
Basemat, Slab Direction 1: N-S, Direction 2: E-W

Table 3G.3-17

Transverse Shear of FB

Location	Element ID	Load ID	d (m)	pv (%)	Shear Force (MN/m)				Vu/ϕVn
					Vu	Vc	Vs	ϕVn	
1 Exterior Wall and Pool Wall @ EL-11.50 ~-10.50m	60011	FB-9	1.74	0.177	0.38	0.00	1.28	1.08	0.346
	60219	FB-9	3.36	0.177	0.26	0.31	2.46	2.35	0.112
	70201	FB-9	1.69	0.177	0.15	0.18	1.24	1.20	0.125
	70204	FB-4	1.69	0.710	1.98	2.06	4.97	5.98	0.331
	110718	FB-9	1.10	0.355	1.02	1.41	1.61	2.56	0.397
2 Exterior Wall @ EL4.65 ~6.60m	62011	FB-9	0.78	0.125	0.27	0.23	0.40	0.54	0.499
	62019	FB-9	0.72	0.125	0.11	0.13	0.37	0.42	0.256
	72001	FB-9	0.72	0.250	0.45	0.10	0.75	0.72	0.620
	72004	FB-9	0.72	0.125	0.23	0.00	0.37	0.32	0.734
3 Exterior Wall @ EL22.50 ~24.60m	64011	FB-9	0.72	0.125	0.29	0.72	0.37	0.92	0.310
	64019	FB-9	0.80	0.125	0.24	0.00	0.41	0.35	0.680
	74001	FB-4	0.72	0.125	0.10	0.12	0.37	0.42	0.249
	74004	FB-4	0.72	0.125	0.06	0.08	0.37	0.38	0.168
4 Spent Fuel Pool Wall @ EL-5.10 ~-3.30m	60819	FB-9	3.33	0.177	0.37	0.43	2.44	2.44	0.151
	70801	FB-9	1.69	0.710	3.99	1.84	4.97	5.79	0.690
	70804	FB-9	1.59	0.177	0.11	0.13	1.17	1.10	0.098
	110748	FB-9	1.22	0.177	1.09	1.38	0.89	1.93	0.563
5 Basemat	90306	FB-9	3.49	0.629	6.11	1.70	9.07	9.15	0.667
	90310	FB-9	3.48	0.629	3.70	5.75	9.06	12.59	0.294
	90410	FB-9	3.50	0.629	3.90	1.76	9.09	9.23	0.423
5 Basemat @ Spent Fuel Pool	90486	FB-9	3.92	0.419	2.91	3.66	6.79	8.89	0.327
	90490	FB-9	5.05	0.629	11.99	6.04	13.13	16.29	0.736
	90526	FB-9	3.94	0.629	6.45	3.16	10.25	11.40	0.566
6 Slab EL4.65m	93306	FB-8	1.10	0.500	0.22	0.26	2.27	2.15	0.101
	93310	FB-9	1.10	0.500	1.08	2.95	2.27	4.44	0.244
	93410	FB-9	1.10	0.500	0.46	2.15	2.27	3.75	0.121

Figure 3G.3-1. Sections Where Thermal Loads Are Defined

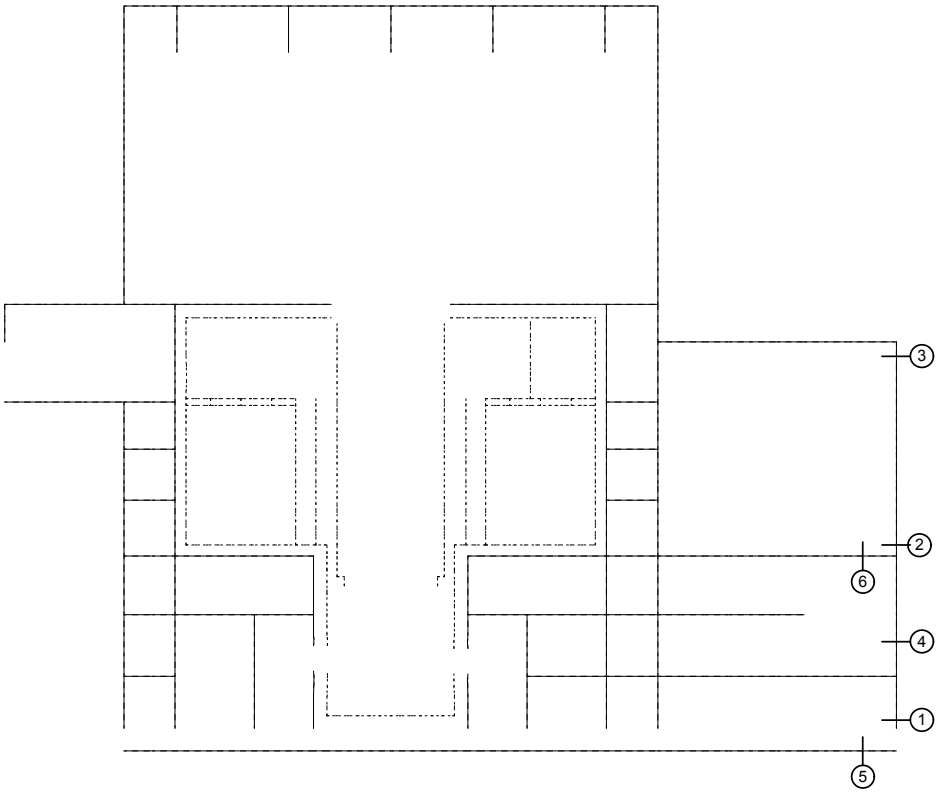

Figure 3G.3-2. Section Considered for Analysis

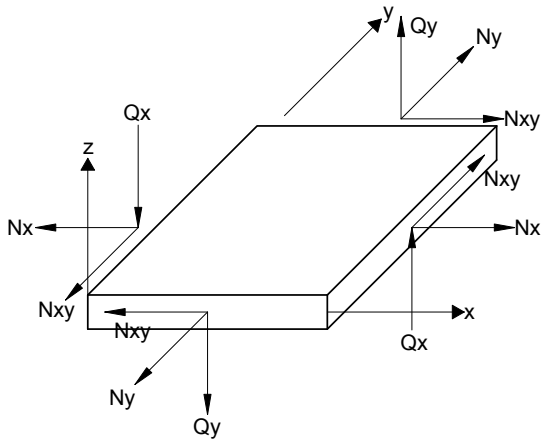

Membrane and Shear Forces

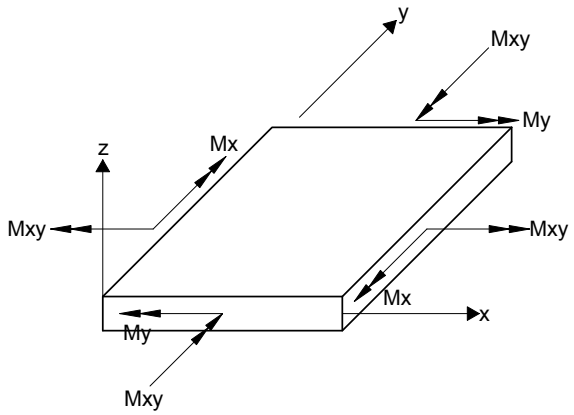

Moments

Definition of Element Coordinate System

Structure	x	y	z
External Wall	horizontal	vertical	outward
Wall in N-S Direction	horizontal	vertical	toward West
Wall in E-W Direction	horizontal	vertical	toward South
Foundation Mat Floor Slab	toward South	toward West	downward

Figure 3G.3-3. Force and Moment in Shell Element

Figure 3G.3-4. Reinforcing Steel of Spent Fuel Pool

Figure 3G.3-5. List of FB Wall and Slab Reinforcement

3G.4 FIREWATER SERVICE COMPLEX

3G.4.1 Objective and Scope

The objective of this subsection is to document the structural design details, inputs and analytical results from the analysis of the FWSC of the standard ESBWR plant. The scope includes the design and analysis of the structure for normal, severe environmental, extreme environmental, and construction loads.

3G.4.2 Conclusion

The following are the major summary conclusions on the design and analysis of the FWSC.

- Based on the results of finite element analyses performed in accordance with the design conditions identified in Subsection 3G.4.3, stresses in concrete and reinforcement are less than the allowable stresses per the applicable regulations, codes and standards listed in Section 3.8.
- The factors of safety against floatation, sliding, and overturning of the structure under various loading combinations are higher than the required minimum.
- The thickness of the roof slabs and exterior walls are more than the minimum required to preclude penetration, perforation and spalling resulting from impact of design basis tornado missiles.

3G.4.3 Structural Description

The FWSC consists of two Firewater Storage Tanks (FWS) and a Fire Pump Enclosure (FPE) that share a common basemat. Each FWS is capable of storing 2082 m^3 (550000 gallons) of water. The FPE provides enclosure and protection for the Electric Pump, RPV Makeup Water Pump, Diesel Pump, Tank Recirculation Pump, and Diesel Fuel Oil Storage Tank.

The FWS is designed with a cylindrical reinforced concrete wall and a dome-shaped reinforced concrete roof. The FWS is lined with a stainless steel plate to prevent leakage of the stored water. The liner plate is not designed to provide structural integrity to the FWS. The FPE is a reinforced concrete box type structure with shear walls and a roof slab.

The key dimensions of the FWSC are summarized in Table 3.8-8. Figure 3G.4-1 shows the concrete outline drawing of the FWSC.

3G.4.4 Analytical Models

3G.4.4.1 Structural Model

The FWSC is analyzed utilizing the finite element computer program NASTRAN. The finite element model consists of quadrilateral and triangular elements to represent the slabs and walls. The model is shown in Figures 3G.4-2 through 3G.4-6. The model includes the whole portion of the FWSC taking the application of nonaxisymmetrical loads into consideration.

The nodal points are defined by a right hand Cartesian coordinate system X, Y, Z. This system, called the global coordinate system, has its origin located at the center of the FWSC at EL 0 mm. The positive X axis is in the south direction; the Y axis is in the east direction; the Z axis is vertical upward. This coordinate system is shown in Figure 3G.4-2.

3G.4.4.2 Foundation Models

The foundation soil is represented by soil springs. The spring constants for rocking and translations are determined based on the following soil parameters which correspond to the Soft Site conditions described in Appendix 3A:

- Shear wave velocity: 300 m/s (1000 ft/s)
- Unit weight: 0.0196 MN/m^3 (125 lbf/ft^3)
- Shear modulus: 180 MN/m^2 (26110 psi)
- Poisson's Ratio: 0.478

Soil springs are attached to the bottom of the foundation mat, and the constraints by side soil are not included in the model. The values of the soil springs used in the analysis are shown in Table 3G.4-1. The springs have perfectly elastic stiffness.

These spring values are multiplied by the foundation mat nodal point tributary areas to compute the spring constants assigned to the base slab nodal points.

3G.4.5 Structural Analysis and Design

3G.4.5.1 Site Design Parameters

The key site design parameters are described in Subsection 3G.1.5.1.

3G.4.5.2 Design Loads, Load Combinations, and Material Properties

3G.4.5.2.1 Design Loads

3G.4.5.2.1.1 Dead Load (D) and Live Load (L and L_o)

The weights of structures are evaluated using the following unit weights.

- reinforced concrete: 23.5 kN/m^3 (150 lbf/ft^3)
- steel: 77.0 kN/m^3 (490 lbf/ft^3)

Weights of major equipment, miscellaneous structures, piping, and commodities are summarized in Tables 3G.4-2 and 3G.4-3.

Live loads on the FWSC floor and roof slabs are described in Subsection 3.8.4.3.5.

3G.4.5.2.1.2 Snow and Rain Load

The snow and rain load is applied to the roof slab and is taken as shown in Table 3G.1-2. One hundred percent of the snow load is applied when combined with seismic loads.

3G.4.5.2.1.3 Lateral Soil Pressure

Lateral soil pressure is not considered since the effect of lateral soil pressure against the solid concrete basemat is neglibible.

3G.4.5.2.1.4 Wind Load (W)

Wind load is applied to the roof slab and external walls above grade and is based on basic wind speed given in Table 3G.1-2.

3G.4.5.2.1.5 Tornado Load (W_t)

The tornado load is applied to the roof slab and external walls above grade and its characteristics are given in Table 3G.1-2. The tornado load, W_t, is further defined by the combinations described in Subsection 3G.1.5.2.1.5.

3G.4.5.2.1.6 Thermal Load (T_o)

Thermal load for the FWSC is evaluated for the normal operating condition. Figure 3G.4-7 shows the section location for temperature distributions for various structural elements of the FWSC, and Table 3G.4-4 shows the magnitude of equivalent linear temperature distribution.

Stress-free temperature is 15.5°C (60°F).

3G.4.5.2.1.7 Design Seismic Loads

The design seismic loads are obtained by soil – structure interaction analyses, which are described in Appendix 3A. The seismic loads used for design are as follows:

- Figures 3G.4-8, 3G.4-9: design seismic shears and moments
- Table 3G.4-5: maximum vertical acceleration

The seismic loads are composed of two perpendicular horizontal and one vertical components. The effects of the three components are combined based on the SRSS method as described in Subsection 3.8.1.3.6.

3G.4.5.2.2 Load Combinations and Acceptance Criteria

Table 3.8-15 gives load combinations for the safety-related reinforced concrete structure. Based on previous experience, critical load combinations are selected for the FWSC design as shown in Table 3G.4-6. The acceptance criteria for the selected combinations are also included in Table 3G.4-6.

3G.4.5.2.3 Material Properties

Properties of the materials used for the FWSC design analyses are the same as those for the RB, and they are described in Subsection 3G.1.5.2.3.

3G.4.5.3 Stability Requirements

The stability requirements for the FWSC foundation are same as those for the RB, and they are described in Subsection 3G.1.5.3.

3G.4.5.4 Structural Design Evaluation

The evaluation of the Seismic Category I structures in the FWSC is performed using the same procedure as the RB, which is described in Subsection 3G.1.5.4.

The locations of the sections that are selected for evaluation are indicated in Figures 3G.4-3 through 3G.4-6. They are selected, in principle, from the center and both ends of wall and slab, where it is reasonably expected that the critical stresses appear based on engineering experience and judgment. Tables 3G.4-7 through 3G.4-11 show the forces and moments at the selected sections from NASTRAN analysis. Element forces and moments listed in the tables are defined with relation to the element coordinate system shown in Figure 3G.4-10. Tables 3G.4-12

through 3G.4-15 show the combined forces and moments in accordance with the selected load combinations listed in Table 3G.4-6.

Table 3G.4-16 lists the sectional thicknesses and rebar ratios used in the evaluation. The values are retrieved from the outline drawings shown in Figure 3G.4-1.

Tables 3G.4-17 through 3G.4-24 compares the rebar and concrete stresses at these sections for the representative elements with the allowable stresses, which are conservatively taken to be the more limiting of ACI 349-01 and ASME Section III Division 2. Table 3G.4-21 summarizes evaluation results for transverse shear in accordance with ACI 349, Chapter 11.

3G.4.5.4.1 Shear Walls

The maximum rebar stress of 330.2 MPa (47.89 ksi) is found in the vertical rebar of FWS cylindrical wall due to the load combination FWSC-6 as shown in Table 3G.4-19. The maximum horizontal rebar stress is found to be 154.1 MPa (22.35 ksi) in FWS cylindrical wall due to the load combination FWSC-6. The maximum transverse shear force is found to be 0.525 MN/m (3.00 kips/in) against the shear strength of 1.594 MN/m (9.10 kips/in) in the FWS cylindrical wall.

As for the FPE, the maximum rebar stress of 224.8 MPa (32.61 ksi) is found in the horizontal rebar of east wall due to the load combination FWSC-6. The maximum vertical rebar stress is found to be 191.8 MPa (27.82 ksi) in east wall in the same load combination. The maximum transverse shear force is found to be 0.691 MN/m (3.95 kips/in) against the shear strength of 1.322 MN/m (7.55 kips/in).

3G.4.5.4.2 Roof Floor Slabs

As for the FPE roof slab, the maximum rebar stress of 252.3 MPa (36.59 ksi) is found due to the load combination FWSC-6 as shown in Table 3G.4-19. The maximum transverse shear force is found to be 0.231 MN/m (1.32 kips/in) against the shear strength of 0.363 MN/m (2.07 kips/in) in the roof of FPE.

On the FWS roof slab, the maximum rebar stress of 193.2 MPa (28.02 ksi) is found due to the load combination FWSC-6. The maximum transverse shear force is found to be 0.105 MN/m (0.60 kips/in) against the shear strength of 0.389 MN/m (2.22 kips/in).

3G.4.5.4.3 Foundation Mat

The maximum rebar stress is found to be 293.7 MPa (42.60 ksi) due to the load combination FWSC-6 as shown in Table 3G.4-19. The maximum transverse shear force is found to be 2.616 MN/m (14.94 kips/in) against the shear strength of 4.454 MN/m (25.43 kips/in).

3G.4.5.4.4 Shear Key

The maximum rebar stress of 74.9 MPa (10.86 ksi) is found in the horizontal rebar of shear key due to the load combination FWSC-6 as shown in Table 3G.4-19. The maximum vertical rebar stress is found to be 65.7 MPa (9.53 ksi) in the same load combination. The maximum transverse shear force is found to be 0.374 MN/m (2.14 kips/in) against the shear strength of 1.247 MN/m (7.12 kips/in).

3G.4.5.5 Foundation Stability

The stabilities of the FWSC foundation against overturning, sliding and floatation are evaluated. The energy approach is used in calculating the factor of safety against overturning.

The factors of safety against overturning, sliding and floatation are given in Table 3G.4-22. All of these meet the acceptance criteria given in Table 3.8-14. Shear keys under the basemat shown in Figure 3G.4-1 are used to resist sliding. In addition, the gap between the basemat and excavated soil is backfilled with concrete up to the grade level as shown in Figure 3G.4-11.

Maximum soil bearing stress is found to be 165 kPa (3450 psf) due to dead plus live loads. Maximum bearing stresses for load combinations involving SSE are shown in Table 3G.4-23 for various site conditions.

3G.4.5.5.1 Foundation Settlement

The basemat design is checked against the normal and differential settlement of the FWSC. It is found that the basemat can resist the maximum settlement at mat foundation corner of 17 mm (0.7 in.) and the settlement averaged at four corners of 10 mm (0.4 in.). The relative displacement between two corners along the longest dimension of the building basemat calculated under linearly varying soil stiffness is 12 mm (0.5 in). These values are specified as maximum settlements in Table 2.0-1.

3G.4.5.6 Tornado Missile Evaluation

The FWSC is shown in Figure 3G.4-1. The minimum thickness required to prevent penetration, concrete spalling and scabbing is evaluated. The methods and procedures are shown in Subsection 3.5.3.1.1.

Table 3G.4-1

Soil Spring Constants for FWSC Analysis Model

Direction of Spring		Loads	Stiffness ($MN/m/m^2$)
Horizontal	X-direction	All	15.303
	Y-direction	All	17.591
Vertical		Horizontal Seismic Loads	63.417
		Other Loads	23.861

Table 3G.4-2

Equipment Load of FWSC

Description	Weight	Remarks
Diesel Pump Skid	106.8 kN (24,000 lbf)	
RPV Makeup Water Pump Skid	106.8 kN (24,000 lbf)	
Electric Pump Skid	89.0 kN (20,000 lbf)	
Diesel Fuel Oil Storage Tank	44.5 kN (10,000 lbf)	Each Tank
Tank Recirculation Pump	2.2 kN (500 lbf)	Each Pump

Table 3G.4-3

Miscellaneous Structures, Piping, and Commodity Load of FWSC

Region	Area Load
Roof of FPE	2.4 kN/m^2 (50psf)

Table 3G.4-4

Equivalent Linear Temperature Distributions at Various Sections

Section*1	Side*2		Equivalent Linear Temperature*3(°C)	
			Normal Operation	
	1	2	T_d	T_g
W1	FWS	AT	-16.9	42.8
W2	FPE	AT	-22.4	31.3
S1	GR	FWS	10.0	11.0
S2	GR	FPE	10.5	10.1
S3	GR	AT	-11.8	54.6
S4	AT	FWS	-16.4	-41.7
S5	AT	FPE	-22.7	-30.6
S6	GR	GR	15.5	0.0

Note *1: See Figure 3G.4-7 for the location of sections.

Note *2: FWS: Firewater Storage Tank,
FPE: Fire Pump Enclosure,
AT: Air,
GR: Ground

Note *3: T_d: Average Temperature,
T_g: Surface Temperature Difference (positive when temperature at Side 1 is higher)

Table 3G.4-5

Maximum Vertical Acceleration

Elevation (m)	Node No.	Stick Model	Max. Vertical Acceleration (g)
19.70	10	FWS	1.69
17.25	9	FWS	1.64
15.53	8	FWS	1.58
13.81	7	FWS	1.58
12.10	6	FWS	1.43
11.00	5	FWS	1.23
9.90	4	FWS	1.13
8.81	3	FWS	1.05
6.73	2	FWS	1.00
4.65	8002	FWSC	0.78
2.15	8001	FWSC	0.78
19.70	11	Oscillator	3.26

Elevation (m)	Node No.	Stick Model	Max. Vertical Acceleration (g)
8.25	405	FPE	1.12
6.45	402	FPE	1.09

See Figure 3A.7-7 for the node numbers.

Table 3G.4-6

Selected Load Combinations for FWSC

Category	Load Combination									Acceptance Criteria*1
	No. *2	D	L	H	T_o	E'	W	W_t	R_o	
Severe	FWSC-3	1.4	1.7	1.7			1.7		1.7	U
Environmental	FWSC-4	1.05	1.3	1.3	1.3		1.3		1.3	U
SSE	FWSC-6	1.0	1.0	1.0	1.0	1.0			1.0	U
Tornado	FWSC-7	1.0	1.0	1.0	1.0			1.0	1.0	U

*1: U = Conservatively taken as envelope of "Allowable Stress as in ASME Section III, Div. 2, Subsection CC-3420 for Factored Load Combination" and "Required section strength based on the strength design method per ACI 349-01".

*2: Based on Table 3.8-15.

Table 3G.4-7

Results of NASTRAN Analysis: Dead Load

Location	Element ID	Nx (MN/m)	Ny (MN/m)	Nxy (MN/m)	Mx (MNm/m)	My (MNm/m)	Mxy (MNm/m)	Qx (MN/m)	Qy (MN/m)
Basemat EL 4.65	18	0.054	-0.019	-0.036	-0.236	0.112	0.065	-0.073	-0.084
	227	-0.042	0.132	0.089	0.046	0.129	0.077	-0.145	-0.022
	237	0.049	-0.003	-0.042	0.084	0.199	-0.132	-0.190	0.133
	16085	-0.030	0.105	0.052	0.065	0.087	0.053	0.063	0.024
Roof of FPE EL 8.25	51556	-0.036	-0.011	0.004	0.066	0.082	-0.005	0.007	0.011
	51558	-0.040	-0.156	-0.002	-0.040	0.014	-0.011	0.062	-0.003
	51576	0.125	-0.048	0.024	0.000	-0.065	-0.009	-0.004	0.078
	51578	0.029	-0.066	0.023	-0.010	-0.020	-0.025	0.002	0.019
Roof of Tank	26007	-0.160	-0.145	-0.005	0.008	0.008	0.000	0.000	0.000
	26079	0.086	-0.084	0.021	-0.001	-0.021	0.002	-0.003	0.022
	26082	-0.007	0.010	0.091	-0.012	-0.011	0.011	-0.017	0.016
	26085	-0.040	0.045	-0.082	-0.016	-0.007	-0.009	-0.020	-0.012
South Wall of FPE	66004	-0.084	-0.071	0.032	-0.001	-0.006	0.000	0.002	0.032
	66006	-0.078	-0.002	0.174	-0.002	-0.022	-0.003	-0.007	-0.024
	66024	-0.215	-0.107	0.016	-0.014	-0.081	0.003	0.001	0.034
East Wall of FPE	67004	0.084	-0.253	-0.035	-0.006	-0.045	0.001	-0.001	-0.064
	67006	0.116	-0.080	-0.195	-0.006	-0.022	0.002	-0.002	-0.038
	67024	0.179	-0.148	-0.033	0.020	0.102	-0.002	0.000	-0.068
Wall of South Tank	35007	-0.106	-0.264	0.037	-0.006	0.008	-0.002	-0.005	0.016
	35010	-0.064	-0.436	-0.015	0.008	0.023	0.001	0.004	0.018
	36507	-0.018	-0.218	0.007	-0.007	-0.003	0.001	-0.002	-0.006
	36510	0.000	-0.258	0.000	0.005	0.000	-0.001	0.001	-0.003
	38507	0.164	-0.087	0.000	-0.004	-0.016	0.000	0.000	0.027
	38510	0.171	-0.090	0.004	-0.002	-0.016	0.000	0.000	0.029
	45001	-0.081	-0.323	0.010	-0.004	0.006	-0.002	-0.004	0.012
	46501	-0.016	-0.241	0.004	-0.004	-0.001	0.001	-0.001	-0.005
	48501	0.173	-0.091	-0.001	-0.003	-0.016	0.000	0.000	0.029
Shear Key	72008	0.007	0.115	-0.059	0.002	0.001	0.000	0.000	-0.001
	73017	-0.157	0.004	-0.222	0.002	0.003	0.002	0.001	-0.001

Table 3G.4-8

Results of NASTRAN Analysis: Thermal Load (Winter)

Location	Element ID	Nx (MN/m)	Ny (MN/m)	Nxy (MN/m)	Mx (MNm/m)	My (MNm/m)	Mxy (MNm/m)	Qx (MN/m)	Qy (MN/m)
Basemat EL 4.65	18	8.599	0.057	2.492	-8.171	-0.926	-0.375	0.060	0.553
	227	-2.901	11.308	-0.088	-3.679	-5.852	0.556	0.159	0.124
	237	3.271	4.954	2.362	-6.091	-3.626	-1.039	-0.492	-0.446
	16085	-4.574	-1.873	1.031	-1.132	-0.048	0.345	-0.640	0.006
Roof of FPE EL 8.25	51556	0.100	0.156	0.014	-0.286	-0.237	0.001	-0.006	0.007
	51558	0.190	-0.460	-0.038	-0.194	-0.238	-0.008	-0.031	-0.001
	51576	0.794	0.118	0.100	-0.295	-0.301	0.000	-0.002	0.025
	51578	0.192	-0.230	0.013	-0.256	-0.299	-0.018	-0.031	0.043
Roof of Tank	26007	0.023	-0.036	-0.006	-0.392	-0.393	0.000	0.001	0.001
	26079	0.417	0.111	0.038	-0.446	-0.535	0.011	-0.010	0.079
	26082	0.322	0.147	0.076	-0.485	-0.483	0.042	-0.051	0.051
	26085	0.240	0.181	-0.005	-0.496	-0.461	-0.035	-0.056	-0.035
South Wall of FPE	66004	2.916	-0.130	-0.123	-0.414	-0.717	0.005	-0.005	-0.184
	66006	1.811	0.944	-0.412	-0.378	-0.693	-0.024	-0.203	-0.618
	66024	-0.091	0.007	-0.037	-0.349	-0.277	0.002	0.016	-0.217
East Wall of FPE	67004	3.209	-0.623	-0.268	0.380	0.424	-0.001	0.002	0.026
	67006	3.333	0.484	-2.062	0.317	0.398	0.006	0.135	0.170
	67024	1.582	-0.137	-0.254	0.372	0.346	0.002	-0.007	0.044
Wall of South Tank	35007	3.012	-0.603	0.194	-1.162	-1.081	-0.009	-0.072	-0.324
	35010	2.650	0.030	-0.198	-1.253	-1.254	0.033	0.015	-0.396
	36507	-0.295	-0.327	0.040	-1.147	-1.126	0.000	-0.011	0.082
	36510	-0.284	-0.025	-0.256	-1.181	-1.126	-0.005	0.015	0.078
	38507	0.103	-0.062	0.007	-1.105	-0.771	0.004	0.000	-0.181
	38510	-0.050	0.003	-0.154	-1.112	-0.771	-0.018	-0.005	-0.205
	45001	3.490	0.717	-0.047	-1.173	-1.294	-0.017	0.003	-0.402
	46501	-0.329	0.464	0.093	-1.200	-1.154	-0.002	-0.004	0.080
	48501	-0.195	0.079	0.049	-1.123	-0.772	0.006	0.002	-0.229
Shear Key	72008	0.030	-0.442	0.322	0.098	0.107	0.033	0.018	-0.058
	73017	-6.179	-0.445	-0.899	0.020	0.028	0.034	0.011	-0.015

Table 3G.4-9

Results of NASTRAN Analysis: Seismic Load (Horizontal: North to South Direction)

Location	Element ID	Nx (MN/m)	Ny (MN/m)	Nxy (MN/m)	Mx (MNm/m)	My (MNm/m)	Mxy (MNm/m)	Qx (MN/m)	Qy (MN/m)
Basemat EL 4.65	18	0.593	0.091	0.022	-1.324	-0.118	0.229	0.540	0.107
	227	2.664	0.037	-0.677	-3.349	-1.025	-0.205	2.090	-0.375
	237	1.515	-0.244	0.179	-3.887	-0.772	0.404	0.772	-0.676
	16085	1.538	0.080	0.030	-2.242	-0.799	0.004	-0.710	-0.678
Roof of FPE EL 8.25	51556	0.027	0.050	-0.097	-0.001	-0.003	-0.003	0.003	0.000
	51558	0.052	0.429	-0.042	-0.019	-0.011	0.000	0.008	-0.001
	51576	0.025	0.018	-0.353	0.000	0.002	-0.004	-0.002	-0.002
	51578	0.017	0.123	-0.139	-0.008	0.003	-0.003	0.006	-0.010
Roof of Tank	26007	0.083	-0.075	0.006	-0.002	-0.002	0.000	-0.003	0.000
	26079	0.169	-0.104	-0.023	-0.006	-0.015	0.005	-0.001	0.009
	26082	0.075	-0.286	-0.086	0.003	0.000	-0.002	0.012	-0.007
	26085	-0.011	-0.315	0.185	0.016	0.006	0.008	0.023	0.013
South Wall of FPE	66004	0.090	-0.141	0.067	-0.006	-0.018	-0.005	-0.014	0.004
	66006	0.143	0.007	-0.313	-0.009	-0.043	-0.012	-0.003	-0.097
	66024	0.521	-0.048	0.004	-0.011	-0.024	-0.002	-0.004	0.005
East Wall of FPE	67004	0.110	-0.097	0.577	0.001	0.005	-0.003	0.001	0.003
	67006	0.515	-0.082	0.035	0.001	0.021	-0.004	0.007	0.036
	67024	0.060	-0.024	0.460	-0.001	-0.002	-0.001	0.000	0.004
Wall of South Tank	35007	0.619	-0.601	-0.978	-0.002	-0.136	-0.018	0.006	-0.155
	35010	1.208	1.697	-1.154	-0.078	-0.518	0.027	0.002	-0.460
	36507	-0.085	-0.429	-1.056	0.041	0.059	-0.007	-0.023	0.016
	36510	-0.572	0.729	-1.061	0.035	0.088	-0.016	0.020	0.037
	38507	0.167	-0.078	-0.226	0.012	0.005	0.010	0.001	0.040
	38510	-0.487	0.209	-0.372	0.011	0.027	-0.027	-0.008	0.013
	45001	1.153	3.799	0.624	-0.171	-0.688	-0.009	0.006	-0.535
	46501	-0.831	1.548	0.283	-0.048	0.065	0.007	-0.012	0.028
	48501	-0.804	0.361	0.101	-0.007	0.035	0.010	0.003	-0.021
Shear Key	72008	-0.203	-0.025	-0.364	0.101	-0.304	0.094	0.128	0.316
	73017	-3.697	1.584	1.701	-0.006	-0.007	0.003	-0.004	0.002

Table 3G.4-10

Results of NASTRAN Analysis: Seismic Load (Horizontal: East to West Direction)

Location	Element ID	Nx (MN/m)	Ny (MN/m)	Nxy (MN/m)	Mx (MNm/m)	My (MNm/m)	Mxy (MNm/m)	Qx (MN/m)	Qy (MN/m)
Basemat EL 4.65	18	0.800	0.595	0.472	1.071	-0.398	-0.681	0.524	0.306
	227	-0.010	0.186	1.103	-0.105	-0.555	-1.480	0.412	0.297
	237	-0.135	-0.546	0.240	1.105	1.704	-1.255	-1.153	0.983
	16085	0.067	0.055	-0.142	-0.441	-0.396	-0.583	-0.156	0.043
Roof of FPE EL 8.25	51556	0.082	0.035	-0.085	-0.009	-0.007	-0.008	-0.001	0.010
	51558	0.021	-0.112	-0.268	0.009	0.004	-0.014	-0.010	-0.010
	51576	0.827	-0.008	0.031	-0.033	-0.073	0.002	-0.001	0.027
	51578	0.249	-0.109	-0.015	0.014	-0.023	0.003	-0.033	0.031
Roof of Tank	26007	-0.004	0.004	0.037	0.000	-0.001	-0.001	0.000	-0.003
	26079	0.202	0.065	0.082	0.003	0.002	0.002	-0.003	0.014
	26082	0.126	0.074	0.140	-0.011	-0.003	0.006	-0.012	0.011
	26085	-0.116	0.069	0.091	0.004	0.001	0.001	0.002	0.004
South Wall of FPE	66004	-0.132	0.151	-0.153	-0.006	-0.019	0.006	0.002	-0.015
	66006	-0.367	0.296	0.628	-0.028	-0.088	0.002	-0.003	-0.125
	66024	-0.181	0.015	0.142	0.003	0.011	-0.003	-0.007	-0.015
East Wall of FPE	67004	0.294	-0.447	-0.157	-0.035	-0.180	0.001	-0.004	-0.108
	67006	0.374	-0.117	-0.863	-0.008	-0.099	-0.001	-0.040	-0.122
	67024	1.030	-0.143	-0.112	0.011	0.045	0.005	0.004	-0.104
Wall of South Tank	35007	-0.982	-1.785	0.030	-0.003	0.317	-0.022	-0.025	0.356
	35010	-0.396	-2.459	-0.962	0.121	0.371	-0.016	0.027	0.264
	36507	0.770	-0.853	0.028	-0.079	-0.092	0.005	-0.014	-0.036
	36510	0.591	-1.094	-0.891	0.058	-0.019	-0.006	-0.015	-0.005
	38507	0.576	-0.266	0.082	-0.025	-0.037	0.016	0.005	-0.033
	38510	0.501	-0.250	-0.181	0.009	-0.025	0.011	0.002	0.014
	45001	0.183	0.655	-1.590	-0.032	-0.096	0.021	0.032	-0.066
	46501	-0.142	0.304	-1.419	-0.021	0.001	-0.023	0.018	0.001
	48501	-0.124	0.064	-0.362	-0.005	0.006	-0.018	-0.005	-0.007
Shear Key	72008	0.258	0.178	-0.032	-0.013	0.000	0.021	0.015	0.002
	73017	-0.047	0.013	0.029	-0.025	0.219	-0.344	-0.085	-0.239

Table 3G.4-11

Results of NASTRAN Analysis: Seismic Load (Vertical: Upward Direction)

Location	Element ID	Nx (MN/m)	Ny (MN/m)	Nxy (MN/m)	Mx (MNm/m)	My (MNm/m)	Mxy (MNm/m)	Qx (MN/m)	Qy (MN/m)
Basemat EL 4.65	18	-0.144	0.035	0.075	0.600	-0.164	-0.094	0.162	0.104
	227	-0.037	-0.204	-0.256	0.106	-0.213	-0.170	0.406	0.044
	237	-0.124	0.013	0.096	-0.044	-0.332	0.158	0.396	-0.235
	16085	-0.010	-0.165	-0.209	-0.006	-0.179	-0.163	0.098	-0.063
Roof of FPE EL 8.25	51556	0.033	-0.016	-0.007	-0.083	-0.113	0.006	-0.008	-0.016
	51558	0.036	0.286	0.005	0.040	-0.024	0.015	-0.076	0.004
	51576	-0.319	0.054	-0.051	0.005	0.093	0.012	0.005	-0.107
	51578	-0.081	0.121	-0.057	0.008	0.027	0.034	0.004	-0.030
Roof of Tank	26007	0.343	0.309	0.010	-0.017	-0.017	0.000	0.001	0.000
	26079	-0.181	0.179	-0.045	0.002	0.045	-0.005	0.006	-0.048
	26082	0.017	-0.023	-0.194	0.026	0.023	-0.023	0.036	-0.033
	26085	0.087	-0.099	0.177	0.035	0.015	0.020	0.042	0.026
South Wall of FPE	66004	0.152	0.041	-0.054	0.007	0.046	-0.001	-0.004	-0.021
	66006	0.126	-0.119	-0.322	0.006	0.061	0.005	0.018	0.077
	66024	0.399	0.128	-0.024	0.016	0.099	-0.004	-0.002	-0.024
East Wall of FPE	67004	-0.223	0.423	0.090	0.009	0.069	-0.002	0.002	0.093
	67006	-0.310	0.049	0.474	0.011	0.036	-0.002	0.002	0.060
	67024	-0.447	0.213	0.081	-0.028	-0.141	0.002	-0.001	0.097
Wall of South Tank	35007	0.241	0.335	-0.066	0.006	-0.039	0.003	0.010	-0.046
	35010	0.169	0.653	0.008	-0.017	-0.063	-0.003	-0.008	-0.049
	36507	0.040	0.349	-0.010	0.013	0.009	-0.002	0.003	0.012
	36510	0.006	0.432	-0.009	-0.008	0.003	0.002	-0.002	0.007
	38507	-0.347	0.171	-0.001	0.008	0.034	0.000	0.000	-0.058
	38510	-0.364	0.180	-0.013	0.005	0.035	-0.001	0.000	-0.062
	45001	0.187	0.496	-0.010	0.004	-0.024	0.005	0.012	-0.034
	46501	0.031	0.418	-0.005	0.007	0.004	-0.002	0.002	0.011
	48501	-0.374	0.183	0.004	0.007	0.034	0.000	0.000	-0.062
Shear Key	72008	-0.111	-0.058	-0.038	-0.007	-0.006	0.002	0.000	0.003
	73017	0.558	-0.001	0.603	-0.005	-0.008	-0.006	-0.003	0.004

Table 3G.4-12

Combined Forces and Moments: Selected Load Combination FWSC-3

Location	Element ID		Nx (MN/m)	Ny (MN/m)	Nxy (MN/m)	Mx (MNm/m)	My (MNm/m)	Mxy (MNm/m)	Qx (MN/m)	Qy (MN/m)
Basemat EL 4.65	18	OTHR	0.225	-0.030	-0.118	-0.872	0.187	0.153	-0.191	-0.125
		TEMP	0.000	0.000	0.000	0.000	0.000	0.000	0.000	0.000
	227	OTHR	0.168	0.378	0.264	-0.239	0.222	0.219	-0.448	-0.114
		TEMP	0.000	0.000	0.000	0.000	0.000	0.000	0.000	0.000
	237	OTHR	0.270	-0.003	-0.043	-0.099	0.404	-0.251	-0.498	0.304
		TEMP	0.000	0.000	0.000	0.000	0.000	0.000	0.000	0.000
	16085	OTHR	0.282	0.400	0.288	-0.269	0.155	0.197	-0.294	-0.022
		TEMP	0.000	0.000	0.000	0.000	0.000	0.000	0.000	0.000
Roof of FPE EL 8.25	51556	OTHR	-0.037	0.033	0.006	0.100	0.138	-0.008	0.009	0.020
		TEMP	0.000	0.000	0.000	0.000	0.000	0.000	0.000	0.000
	51558	OTHR	-0.036	-0.348	-0.008	-0.046	0.030	-0.019	0.090	-0.005
		TEMP	0.000	0.000	0.000	0.000	0.000	0.000	0.000	0.000
	51576	OTHR	0.423	-0.057	0.059	-0.007	-0.113	-0.014	-0.007	0.130
		TEMP	0.000	0.000	0.000	0.000	0.000	0.000	0.000	0.000
	51578	OTHR	0.111	-0.148	0.073	-0.008	-0.033	-0.042	-0.006	0.037
		TEMP	0.000	0.000	0.000	0.000	0.000	0.000	0.000	0.000
Roof of Tank	26007	OTHR	-0.286	-0.226	-0.013	0.012	0.012	0.000	-0.002	0.000
		TEMP	0.000	0.000	0.000	0.000	0.000	0.000	0.000	0.000
	26079	OTHR	0.118	-0.134	0.042	-0.001	-0.030	0.005	-0.004	0.034
		TEMP	0.000	0.000	0.000	0.000	0.000	0.000	0.000	0.000
	26082	OTHR	-0.037	0.029	0.152	-0.019	-0.015	0.016	-0.025	0.023
		TEMP	0.000	0.000	0.000	0.000	0.000	0.000	0.000	0.000
	26085	OTHR	-0.083	0.082	-0.146	-0.025	-0.010	-0.014	-0.030	-0.018
		TEMP	0.000	0.000	0.000	0.000	0.000	0.000	0.000	0.000
South Wall of FPE	66004	OTHR	-0.177	-0.044	0.077	-0.010	-0.064	0.001	0.004	0.026
		TEMP	0.000	0.000	0.000	0.000	0.000	0.000	0.000	0.000
	66006	OTHR	-0.137	0.177	0.391	-0.009	-0.084	-0.007	-0.024	-0.107
		TEMP	0.000	0.000	0.000	0.000	0.000	0.000	0.000	0.000
	66024	OTHR	-0.489	-0.155	0.031	-0.020	-0.120	0.005	0.003	0.022
		TEMP	0.000	0.000	0.000	0.000	0.000	0.000	0.000	0.000
East Wall of FPE	67004	OTHR	0.298	-0.547	-0.095	-0.012	-0.088	0.002	-0.003	-0.121
		TEMP	0.000	0.000	0.000	0.000	0.000	0.000	0.000	0.000
	67006	OTHR	0.442	-0.045	-0.633	-0.014	-0.044	0.003	-0.002	-0.074
		TEMP	0.000	0.000	0.000	0.000	0.000	0.000	0.000	0.000
	67024	OTHR	0.593	-0.265	-0.094	0.034	0.173	-0.002	0.001	-0.116
		TEMP	0.000	0.000	0.000	0.000	0.000	0.000	0.000	0.000
Wall of South Tank	35007	OTHR	0.053	-0.271	0.030	0.001	0.098	-0.005	-0.011	0.170
		TEMP	0.000	0.000	0.000	0.000	0.000	0.000	0.000	0.000
	35010	OTHR	0.198	-0.668	-0.110	0.027	0.105	0.003	0.012	0.150
		TEMP	0.000	0.000	0.000	0.000	0.000	0.000	0.000	0.000
	36507	OTHR	0.593	-0.276	-0.040	-0.024	-0.038	0.002	-0.005	-0.032
		TEMP	0.000	0.000	0.000	0.000	0.000	0.000	0.000	0.000
	36510	OTHR	0.606	-0.383	-0.053	0.009	-0.023	-0.005	0.002	-0.024
		TEMP	0.000	0.000	0.000	0.000	0.000	0.000	0.000	0.000
	38507	OTHR	0.301	-0.127	0.002	-0.007	-0.018	0.002	0.000	0.045
		TEMP	0.000	0.000	0.000	0.000	0.000	0.000	0.000	0.000
	38510	OTHR	0.315	-0.144	0.025	0.000	-0.015	0.003	0.001	0.054
		TEMP	0.000	0.000	0.000	0.000	0.000	0.000	0.000	0.000
	45001	OTHR	0.167	-0.308	0.076	-0.005	0.039	-0.007	-0.015	0.120
		TEMP	0.000	0.000	0.000	0.000	0.000	0.000	0.000	0.000
	46501	OTHR	0.555	-0.340	0.025	-0.010	-0.021	0.003	-0.002	-0.031
		TEMP	0.000	0.000	0.000	0.000	0.000	0.000	0.000	0.000
	48501	OTHR	0.331	-0.154	-0.007	-0.001	-0.012	0.000	0.000	0.059
		TEMP	0.000	0.000	0.000	0.000	0.000	0.000	0.000	0.000
Shear Key	72008	OTHR	0.166	0.145	0.122	0.012	0.008	0.002	0.005	-0.004
		TEMP	0.000	0.000	0.000	0.000	0.000	0.000	0.000	0.000
	73017	OTHR	-0.876	0.172	-0.638	0.006	0.010	0.007	0.004	-0.005
		TEMP	0.000	0.000	0.000	0.000	0.000	0.000	0.000	0.000

OTHR: Loads other than thermal loads
TEMP: Thermal loads

Table 3G.4-13

Combined Forces and Moments: Selected Load Combination FWSC-4

Location	Element ID		Nx (MN/m)	Ny (MN/m)	Nxy (MN/m)	Mx (MNm/m)	My (MNm/m)	Mxy (MNm/m)	Qx (MN/m)	Qy (MN/m)
Basemat EL 4.65	18	OTHR	0.170	-0.022	-0.088	-0.655	0.140	0.115	-0.143	-0.094
		TEMP	11.178	0.074	3.240	-10.622	-1.204	-0.488	0.078	0.719
	227	OTHR	0.127	0.284	0.197	-0.182	0.165	0.164	-0.335	-0.086
		TEMP	-3.772	14.700	-0.114	-4.782	-7.608	0.723	0.207	0.161
	237	OTHR	0.204	-0.003	-0.032	-0.077	0.302	-0.188	-0.373	0.228
		TEMP	4.252	6.441	3.070	-7.918	-4.714	-1.350	-0.640	-0.580
	16085	OTHR	0.213	0.300	0.215	-0.203	0.116	0.148	-0.220	-0.017
		TEMP	-5.946	-2.435	1.340	-1.471	-0.062	0.448	-0.833	0.007
Roof of FPE EL 8.25	51556	OTHR	-0.028	0.025	0.005	0.076	0.104	-0.006	0.007	0.015
		TEMP	0.130	0.203	0.018	-0.371	-0.308	0.001	-0.008	0.009
	51558	OTHR	-0.027	-0.261	-0.006	-0.034	0.023	-0.014	0.068	-0.004
		TEMP	0.247	-0.598	-0.050	-0.253	-0.309	-0.010	-0.040	-0.001
	51576	OTHR	0.317	-0.043	0.044	-0.005	-0.085	-0.011	-0.005	0.098
		TEMP	1.032	0.154	0.130	-0.384	-0.391	0.000	-0.003	0.032
	51578	OTHR	0.083	-0.111	0.055	-0.006	-0.025	-0.032	-0.005	0.028
		TEMP	0.250	-0.299	0.016	-0.333	-0.389	-0.023	-0.040	0.056
Roof of Tank	26007	OTHR	-0.216	-0.170	-0.010	0.009	0.009	0.000	-0.001	0.000
		TEMP	0.030	-0.047	-0.008	-0.510	-0.511	0.000	0.002	0.001
	26079	OTHR	0.089	-0.100	0.032	-0.001	-0.023	0.003	-0.003	0.026
		TEMP	0.543	0.144	0.050	-0.580	-0.696	0.015	-0.013	0.102
	26082	OTHR	-0.028	0.022	0.114	-0.014	-0.012	0.012	-0.019	0.018
		TEMP	0.418	0.191	0.099	-0.631	-0.628	0.055	-0.067	0.066
	26085	OTHR	-0.062	0.062	-0.110	-0.019	-0.008	-0.011	-0.022	-0.014
		TEMP	0.311	0.235	-0.007	-0.644	-0.599	-0.046	-0.073	-0.045
South Wall of FPE	66004	OTHR	-0.132	-0.034	0.058	-0.007	-0.048	0.001	0.003	0.020
		TEMP	3.790	-0.169	-0.160	-0.538	-0.932	0.006	-0.006	-0.239
	66006	OTHR	-0.102	0.133	0.293	-0.007	-0.063	-0.005	-0.018	-0.080
		TEMP	2.355	1.227	-0.536	-0.492	-0.900	-0.032	-0.264	-0.803
	66024	OTHR	-0.366	-0.117	0.023	-0.015	-0.090	0.004	0.002	0.016
		TEMP	-0.119	0.009	-0.049	-0.453	-0.360	0.002	0.020	-0.282
East Wall of FPE	67004	OTHR	0.224	-0.410	-0.071	-0.009	-0.066	0.001	-0.002	-0.091
		TEMP	4.172	-0.810	-0.348	0.494	0.551	-0.002	0.002	0.034
	67006	OTHR	0.332	-0.033	-0.475	-0.011	-0.033	0.002	-0.002	-0.056
		TEMP	4.333	0.630	-2.681	0.412	0.518	0.008	0.176	0.222
	67024	OTHR	0.444	-0.199	-0.070	0.026	0.130	-0.002	0.001	-0.087
		TEMP	2.057	-0.179	-0.330	0.484	0.450	0.003	-0.009	0.057
Wall of South Tank	35007	OTHR	0.041	-0.204	0.021	0.000	0.074	-0.004	-0.008	0.127
		TEMP	3.916	-0.784	0.253	-1.510	-1.405	-0.012	-0.093	-0.422
	35010	OTHR	0.150	-0.501	-0.083	0.020	0.078	0.002	0.009	0.112
		TEMP	3.445	0.040	-0.257	-1.628	-1.630	0.043	0.020	-0.515
	36507	OTHR	0.445	-0.207	-0.031	-0.018	-0.029	0.001	-0.004	-0.024
		TEMP	-0.384	-0.425	0.052	-1.491	-1.464	-0.001	-0.014	0.106
	36510	OTHR	0.454	-0.287	-0.040	0.006	-0.017	-0.003	0.001	-0.018
		TEMP	-0.369	-0.033	-0.333	-1.535	-1.464	-0.006	0.019	0.102
	38507	OTHR	0.227	-0.095	0.001	-0.005	-0.014	0.002	0.000	0.034
		TEMP	0.134	-0.081	0.009	-1.437	-1.002	0.005	0.001	-0.236
	38510	OTHR	0.237	-0.108	0.019	0.000	-0.011	0.002	0.001	0.041
		TEMP	-0.065	0.003	-0.200	-1.446	-1.003	-0.023	-0.007	-0.266
	45001	OTHR	0.127	-0.230	0.058	-0.004	0.029	-0.005	-0.012	0.090
		TEMP	4.537	0.932	-0.061	-1.525	-1.682	-0.022	0.004	-0.522
	46501	OTHR	0.416	-0.255	0.019	-0.007	-0.015	0.002	-0.002	-0.023
		TEMP	-0.427	0.603	0.120	-1.560	-1.500	-0.003	-0.005	0.104
	48501	OTHR	0.249	-0.116	-0.005	-0.001	-0.009	0.000	0.000	0.044
		TEMP	-0.253	0.103	0.064	-1.459	-1.004	0.008	0.002	-0.298
Shear Key	72008	OTHR	0.124	0.109	0.090	0.009	0.006	0.001	0.003	-0.003
		TEMP	0.038	-0.574	0.418	0.127	0.139	0.043	0.024	-0.076
	73017	OTHR	-0.660	0.130	-0.477	0.005	0.007	0.005	0.003	-0.004
		TEMP	-8.033	-0.578	-1.169	0.026	0.037	0.044	0.014	-0.019

OTHR: Loads other than thermal loads
TEMP: Thermal loads

Table 3G.4-14

Combined Forces and Moments: Selected Load Combination FWSC-6

Location	Element ID		Nx (MN/m)	Ny (MN/m)	Nxy (MN/m)	Mx (MNm/m)	My (MNm/m)	Mxy (MNm/m)	Qx (MN/m)	Qy (MN/m)
Basemat EL 4.65	18	OTHR	0.139	-0.026	-0.083	-0.560	0.147	0.102	-0.154	-0.099
		TEMP	8.599	0.057	2.492	-8.171	-0.926	-0.375	0.060	0.553
		SEIS	1.009	0.603	0.482	1.806	0.447	0.725	0.770	0.341
	227	OTHR	0.018	0.252	0.217	-0.039	0.203	0.161	-0.390	-0.065
		TEMP	-2.901	11.308	-0.088	-3.679	-5.852	0.556	0.159	0.124
		SEIS	2.664	0.279	1.341	3.352	1.185	1.505	2.169	0.481
	237	OTHR	0.127	0.007	-0.045	0.071	0.316	-0.189	-0.378	0.232
		TEMP	3.271	4.954	2.362	-6.091	-3.626	-1.039	-0.492	-0.446
		SEIS	1.534	0.599	0.330	4.041	1.900	1.328	1.443	1.216
	16085	OTHR	0.156	0.260	0.204	-0.119	0.148	0.139	-0.191	0.009
		TEMP	-4.574	-1.873	1.031	-1.132	-0.048	0.345	-0.640	0.006
		SEIS	1.540	0.192	0.270	2.285	0.910	0.606	0.734	0.683
Roof of FPE EL 8.25	51556	OTHR	-0.032	0.014	0.006	0.080	0.108	-0.006	0.008	0.015
		TEMP	0.100	0.156	0.014	-0.286	-0.237	0.001	-0.006	0.007
		SEIS	0.092	0.063	0.130	0.083	0.113	0.010	0.009	0.019
	51558	OTHR	-0.036	-0.269	-0.005	-0.039	0.023	-0.015	0.072	-0.004
		TEMP	0.190	-0.460	-0.038	-0.194	-0.238	-0.008	-0.031	-0.001
		SEIS	0.067	0.528	0.272	0.045	0.027	0.021	0.077	0.011
	51576	OTHR	0.299	-0.052	0.048	-0.005	-0.088	-0.011	-0.005	0.102
		TEMP	0.794	0.118	0.100	-0.295	-0.301	0.000	-0.002	0.025
		SEIS	0.887	0.057	0.358	0.033	0.118	0.013	0.005	0.110
	51578	OTHR	0.076	-0.114	0.054	-0.008	-0.026	-0.033	-0.003	0.028
		TEMP	0.192	-0.230	0.013	-0.256	-0.299	-0.018	-0.031	0.043
		SEIS	0.263	0.205	0.152	0.018	0.036	0.034	0.034	0.044
Roof of Tank	26007	OTHR	-0.217	-0.194	-0.006	0.010	0.010	0.000	0.000	0.000
		TEMP	0.023	-0.036	-0.006	-0.392	-0.393	0.000	0.001	0.001
		SEIS	0.353	0.318	0.039	0.017	0.017	0.001	0.003	0.003
	26079	OTHR	0.103	-0.115	0.028	-0.001	-0.025	0.003	-0.003	0.028
		TEMP	0.417	0.111	0.038	-0.446	-0.535	0.011	-0.010	0.079
		SEIS	0.320	0.217	0.096	0.007	0.047	0.007	0.007	0.051
	26082	OTHR	-0.019	0.010	0.121	-0.015	-0.013	0.013	-0.021	0.020
		TEMP	0.322	0.147	0.076	-0.485	-0.483	0.042	-0.051	0.051
		SEIS	0.148	0.296	0.254	0.028	0.023	0.024	0.040	0.035
	26085	OTHR	-0.061	0.058	-0.112	-0.020	-0.008	-0.012	-0.025	-0.015
		TEMP	0.240	0.181	-0.005	-0.496	-0.461	-0.035	-0.056	-0.035
		SEIS	0.145	0.337	0.272	0.039	0.016	0.022	0.048	0.029

OTHR: Loads other than thermal and seismic loads
TEMP: Thermal loads
SEIS: Seismic loads

Table 3G.4-14

Combined Forces and Moments: Selected Load Combination FWSC-6 (Continued)

Location	Element ID		Nx (MN/m)	Ny (MN/m)	Nxy (MN/m)	Mx (MNm/m)	My (MNm/m)	Mxy (MNm/m)	Qx (MN/m)	Qy (MN/m)
South Wall of FPE	66004	OTHR	-0.134	-0.037	0.054	-0.006	-0.041	0.001	0.003	0.022
		TEMP	2.916	-0.130	-0.123	-0.414	-0.717	0.005	-0.005	-0.184
		SEIS	0.221	0.211	0.198	0.011	0.053	0.008	0.015	0.026
	66006	OTHR	-0.110	0.114	0.296	-0.006	-0.056	-0.005	-0.016	-0.071
		TEMP	1.811	0.944	-0.412	-0.378	-0.693	-0.024	-0.203	-0.618
		SEIS	0.414	0.320	0.776	0.030	0.115	0.013	0.018	0.176
	66024	OTHR	-0.373	-0.122	0.024	-0.015	-0.095	0.004	0.002	0.024
		TEMP	-0.091	0.007	-0.037	-0.349	-0.277	0.002	0.016	-0.217
		SEIS	0.681	0.138	0.166	0.020	0.102	0.005	0.008	0.029
East Wall of FPE	67004	OTHR	0.209	-0.398	-0.085	-0.009	-0.065	0.001	-0.002	-0.088
		TEMP	3.209	-0.623	-0.268	0.380	0.424	-0.001	0.002	0.026
		SEIS	0.385	0.623	0.607	0.036	0.193	0.004	0.005	0.143
	67006	OTHR	0.289	-0.041	-0.445	-0.010	-0.034	0.002	-0.002	-0.055
		TEMP	3.333	0.484	-2.062	0.317	0.398	0.006	0.135	0.170
		SEIS	0.708	0.153	0.986	0.014	0.108	0.005	0.041	0.141
	67024	OTHR	0.419	-0.201	-0.077	0.026	0.134	-0.002	0.001	-0.093
		TEMP	1.582	-0.137	-0.254	0.372	0.346	0.002	-0.007	0.044
		SEIS	1.124	0.258	0.482	0.030	0.148	0.006	0.004	0.142
Wall of South Tank	35007	OTHR	0.017	-0.183	0.073	0.000	0.071	-0.003	-0.008	0.121
		TEMP	3.012	-0.603	0.194	-1.162	-1.081	-0.009	-0.072	-0.324
		SEIS	1.186	1.913	0.988	0.007	0.347	0.029	0.028	0.391
	35010	OTHR	0.086	-0.518	-0.013	0.022	0.094	0.003	0.008	0.124
		TEMP	2.650	0.030	-0.198	-1.253	-1.254	0.033	0.015	-0.396
		SEIS	1.283	3.058	1.507	0.145	0.640	0.032	0.028	0.533
	36507	OTHR	0.401	-0.210	0.011	-0.016	-0.026	0.002	-0.003	-0.023
		TEMP	-0.295	-0.327	0.040	-1.147	-1.126	0.000	-0.011	0.082
		SEIS	0.776	1.017	1.058	0.090	0.110	0.009	0.027	0.041
	36510	OTHR	0.436	-0.296	0.007	0.005	-0.020	-0.002	0.002	-0.019
		TEMP	-0.284	-0.025	-0.256	-1.181	-1.126	-0.005	0.015	0.078
		SEIS	0.822	1.384	1.387	0.068	0.090	0.017	0.025	0.038
	38507	OTHR	0.237	-0.106	0.001	-0.005	-0.014	0.001	0.000	0.039
		TEMP	0.103	-0.062	0.007	-1.105	-0.771	0.004	0.000	-0.181
		SEIS	0.693	0.326	0.242	0.029	0.050	0.019	0.005	0.078
	38510	OTHR	0.254	-0.115	0.012	-0.001	-0.015	0.001	0.000	0.043
		TEMP	-0.050	0.003	-0.154	-1.112	-0.771	-0.018	-0.005	-0.205
		SEIS	0.788	0.372	0.415	0.015	0.051	0.029	0.008	0.065
Wall of South Tank	45001	OTHR	0.056	-0.329	0.025	0.002	0.058	-0.005	-0.011	0.111
		TEMP	3.490	0.717	-0.047	-1.173	-1.294	-0.017	0.003	-0.402
		SEIS	1.182	3.887	1.713	0.174	0.695	0.024	0.035	0.540
	46501	OTHR	0.409	-0.274	0.006	-0.010	-0.021	0.002	-0.003	-0.023
		TEMP	-0.329	0.464	0.093	-1.200	-1.154	-0.002	-0.004	0.080
		SEIS	0.844	1.632	1.449	0.053	0.065	0.024	0.022	0.030
	48501	OTHR	0.262	-0.117	-0.004	-0.003	-0.014	0.000	0.000	0.043
		TEMP	-0.195	0.079	0.049	-1.123	-0.772	0.006	0.002	-0.229
		SEIS	0.895	0.410	0.377	0.011	0.049	0.021	0.006	0.066
Shear Key	72008	OTHR	0.132	0.101	0.104	0.006	0.005	-0.001	0.000	-0.003
		TEMP	0.030	-0.442	0.322	0.098	0.107	0.033	0.018	-0.058
		SEIS	0.347	0.189	0.367	0.102	0.304	0.096	0.129	0.316
	73017	OTHR	-0.485	0.065	-0.509	0.005	0.007	0.005	0.003	-0.004
		TEMP	-6.179	-0.445	-0.899	0.020	0.028	0.034	0.011	-0.015
		SEIS	3.739	1.584	1.805	0.030	0.219	0.344	0.085	0.239

Table 3G.4-15

Combined Forces and Moments: Selected Load Combination FWSC -7

Location	Element ID		Nx (MN/m)	Ny (MN/m)	Nxy (MN/m)	Mx (MNm/m)	My (MNm/m)	Mxy (MNm/m)	Qx (MN/m)	Qy (MN/m)
Basemat EL 4.65	18	OTHR	0.185	-0.016	-0.087	-0.703	0.112	0.120	-0.118	-0.074
		TEMP	8.599	0.057	2.492	-8.171	-0.926	-0.375	0.060	0.553
	227	OTHR	0.261	0.288	0.154	-0.357	0.104	0.150	-0.237	-0.108
		TEMP	-2.901	11.308	-0.088	-3.679	-5.852	0.556	0.159	0.124
	237	OTHR	0.271	-0.015	-0.013	-0.259	0.250	-0.160	-0.323	0.193
		TEMP	3.271	4.954	2.362	-6.091	-3.626	-1.039	-0.492	-0.446
	16085	OTHR	0.267	0.312	0.213	-0.294	0.072	0.145	-0.254	-0.052
		TEMP	-4.574	-1.873	1.031	-1.132	-0.048	0.345	-0.640	0.006
Roof of FPE EL 8.25	51556	OTHR	-0.014	0.043	0.002	0.046	0.070	-0.004	0.004	0.010
		TEMP	0.100	0.156	0.014	-0.286	-0.237	0.001	-0.006	0.007
	51558	OTHR	-0.004	-0.218	-0.008	-0.014	0.019	-0.010	0.040	-0.002
		TEMP	0.190	-0.460	-0.038	-0.194	-0.238	-0.008	-0.031	-0.001
	51576	OTHR	0.313	-0.016	0.033	-0.007	-0.060	-0.006	-0.003	0.067
		TEMP	0.794	0.118	0.100	-0.295	-0.301	0.000	-0.002	0.025
	51578	OTHR	0.088	-0.091	0.048	0.000	-0.017	-0.021	-0.008	0.022
		TEMP	0.192	-0.230	0.013	-0.256	-0.299	-0.018	-0.031	0.043
Roof of Tank	26007	OTHR	-0.124	-0.051	-0.015	0.003	0.004	0.000	-0.004	0.000
		TEMP	0.023	-0.036	-0.006	-0.392	-0.393	0.000	0.001	0.001
	26079	OTHR	0.023	-0.033	0.030	0.000	-0.008	0.003	-0.001	0.010
		TEMP	0.417	0.111	0.038	-0.446	-0.535	0.011	-0.010	0.079
	26082	OTHR	-0.034	0.036	0.053	-0.006	-0.003	0.004	-0.005	0.005
		TEMP	0.322	0.147	0.076	-0.485	-0.483	0.042	-0.051	0.051
	26085	OTHR	-0.037	0.044	-0.060	-0.008	-0.003	-0.004	-0.006	-0.004
		TEMP	0.240	0.181	-0.005	-0.496	-0.461	-0.035	-0.056	-0.035

OTHR: Loads other than thermal loads
TEMP: Thermal loads

Table 3G.4-15

Combined Forces and Moments: Selected Load Combination FWSC -7 (Continued)

Location	Element ID		Nx (MN/m)	Ny (MN/m)	Nxy (MN/m)	Mx (MNm/m)	My (MNm/m)	Mxy (MNm/m)	Qx (MN/m)	Qy (MN/m)
South Wall of FPE	66004	OTHR	-0.116	0.000	0.059	-0.008	-0.056	0.001	0.002	0.004
		TEMP	2.916	-0.130	-0.123	-0.414	-0.717	0.005	-0.005	-0.184
	66006	OTHR	-0.083	0.144	0.258	-0.008	-0.065	-0.005	-0.018	-0.086
		TEMP	1.811	0.944	-0.412	-0.378	-0.693	-0.024	-0.203	-0.618
	66024	OTHR	-0.315	-0.073	0.021	-0.008	-0.055	0.003	0.002	-0.007
		TEMP	-0.091	0.007	-0.037	-0.349	-0.277	0.002	0.016	-0.217
East Wall of FPE	67004	OTHR	0.220	-0.357	-0.047	-0.008	-0.056	0.001	-0.002	-0.073
		TEMP	3.209	-0.623	-0.268	0.380	0.424	-0.001	0.002	0.026
	67006	OTHR	0.348	-0.018	-0.464	-0.009	-0.029	0.002	-0.001	-0.048
		TEMP	3.333	0.484	-2.062	0.317	0.398	0.006	0.135	0.170
	67024	OTHR	0.435	-0.151	-0.055	0.018	0.090	-0.001	0.001	-0.060
		TEMP	1.582	-0.137	-0.254	0.372	0.346	0.002	-0.007	0.044
Wall of South Tank	35007	OTHR	0.058	-0.177	-0.039	0.001	0.072	-0.005	-0.007	0.123
		TEMP	3.012	-0.603	0.194	-1.162	-1.081	-0.009	-0.072	-0.324
	35010	OTHR	0.207	-0.399	-0.158	0.016	0.053	0.001	0.010	0.087
		TEMP	2.650	0.030	-0.198	-1.253	-1.254	0.033	0.015	-0.396
	36507	OTHR	0.450	-0.151	-0.074	-0.019	-0.031	0.001	-0.005	-0.020
		TEMP	-0.295	-0.327	0.040	-1.147	-1.126	0.000	-0.011	0.082
	36510	OTHR	0.428	-0.217	-0.091	0.008	-0.013	-0.005	0.000	-0.014
		TEMP	-0.284	-0.025	-0.256	-1.181	-1.126	-0.005	0.015	0.078
	38507	OTHR	0.115	-0.043	0.006	-0.005	-0.004	0.003	0.000	0.012
		TEMP	0.103	-0.062	0.007	-1.105	-0.771	0.004	0.000	-0.181
	38510	OTHR	0.113	-0.056	0.026	0.003	0.003	0.004	0.001	0.021
		TEMP	-0.050	0.003	-0.154	-1.112	-0.771	-0.018	-0.005	-0.205
	45001	OTHR	0.193	-0.053	0.094	-0.011	-0.009	-0.005	-0.011	0.054
		TEMP	3.490	0.717	-0.047	-1.173	-1.294	-0.017	0.003	-0.402
	46501	OTHR	0.379	-0.173	0.032	-0.003	-0.008	0.003	-0.001	-0.019
		TEMP	-0.329	0.464	0.093	-1.200	-1.154	-0.002	-0.004	0.080
	48501	OTHR	0.127	-0.068	-0.007	0.004	0.006	-0.001	0.000	0.026
		TEMP	-0.195	0.079	0.049	-1.123	-0.772	0.006	0.002	-0.229
Shear Key	72008	OTHR	0.114	0.103	0.082	0.012	0.007	0.004	0.007	-0.003
		TEMP	0.030	-0.442	0.322	0.098	0.107	0.033	0.018	-0.058
	73017	OTHR	-0.813	0.216	-0.387	0.004	0.007	0.005	0.003	-0.003
		TEMP	-6.179	-0.445	-0.899	0.020	0.028	0.034	0.011	-0.015

Table 3G.4-16

Sectional Thicknesses and Rebar Ratios Used in the Evaluation

Location	Element ID	Thickness (m)	Primary Reinforcement					Shear Tie	
			Position	Direction 1*1		Direction 2*1			
				Arrangement	Ratio (%)	Arrangement	Ratio (%)	Arrangement	Ratio (%)
Basemat EL 4.65	18	2.50	Top	3-#11@200	0.604	3-#11@200	0.604	#7@400x400	0.242
			Bottom	3-#11@200	0.604	3-#11@200	0.604		
	227 237 16085	2.50	Top	3-#11@200 + 1-#11@400	0.705	3-#11@200 + 1-#11@400	0.705	#7@400x200	0.484
			Bottom	3-#11@200	0.604	3-#11@200	0.604		
Roof of FPE EL 8.25	51556 51558 51576 51578	0.60	Top	1-#11@200	0.839	1-#11@200	0.839	-	-
			Bottom	1-#11@200	0.839	1-#11@200	0.839		
Roof of Tank	26007 26079 26082 26085	0.60	Top	1-#9@200	0.538	1-#9@200	0.538	-	-
			Bottom	1-#9@200	0.538	1-#9@200	0.538		

Note *1: Wall — Direction 1: Horizontal — Direction 2: Vertical
Basemat, Slab, Roof — Direction 1: N-S — Direction 2: E-W

Table 3G.4-16

Sectional Thicknesses and Rebar Ratios Used in the Evaluation (Continued)

Location	Element ID	Thickness (m)	Primary Reinforcement					Shear Tie	
			Position	Direction 1*1		Direction 2*1			
				Arrangement	Ratio (%)	Arrangement	Ratio (%)	Arrangement	Ratio (%)
South Wall of FPE	66004	0.65	Inside	1-#11@200	0.774	1-#11@200	0.774	-	-
			Outside	2-#11@200	1.548	2-#11@200	1.548		
	66006	0.65	Inside	1-#11@200	0.774	1-#11@133	1.164	#6@200x200	0.710
			Outside	2-#11@200	1.548	1-#11@133 + 1-#11@200	1.938		
	66024	0.65	Inside	1-#11@200	0.774	1-#11@200	0.774	-	-
			Outside	1-#11@200 + 1-#11@400	1.161	1-#11@200 + 1-#11@400	1.161		
East Wall of FPE	67004	0.65	Inside	1-#11@200	0.774	1-#11@200	0.774	-	-
			Outside	2-#11@200	1.548	2-#11@200	1.548		
	67006	0.65	Inside	1-#11@200	0.774	1-#11@200	0.774	#6@200x200	0.710
			Outside	2-#11@200	1.548	1-#11@133 + 1-#11@200	1.938		
	67024	0.65	Inside	1-#11@200	0.774	1-#11@200	0.774	-	-
			Outside	1-#11@200 + 1-#11@400	1.161	1-#11@200 + 1-#11@400	1.161		
Wall of South Tank	35007 35010 45001	1.00	Inside	1-#11@150 + 1-#11@300	1.006	1-#11@150*2 + 1-#11@300*3	1.006	#6@150*2x300	0.631
			Outside	2-#11@150 + 1-#11@300	1.677	2-#11@150*2 + 1-#11@300*3	1.677		
	36507 36510 46501	1.00	Inside	1-#11@150	0.671	1-#11@150*2	0.671	-	-
			Outside	2-#11@150	1.342	2-#11@150*2	1.342		
	38507 38510 48501	1.00	Inside	1-#11@150	0.671	1-#11@150*2	0.671	-	-
			Outside	1-#11@150	0.671	1-#11@150*2	0.671		
Shear key	72008	2.00	Inside	1-#11@200 + 1-#11@400	0.377	1-#11@200 + 1-#11@400	0.377	-	-
			Outside	1-#11@200 + 1-#11@400	0.377	1-#11@200 + 1-#11@400	0.377		
	73017	2.00	Inside	3-#11@200	0.755	2-#11@200 + 1-#11@400	0.629	#6@400x400	0.177
			Outside	3-#11@200	0.755	2-#11@200 + 1-#11@400	0.629		

Note *1: Wall — Direction 1: Horizontal — Direction 2: Vertical
Basemat, Slab, Roof — Direction 1: N-S — Direction 2: E-W

Note *2: Rebar described as @150 is arranged by @1°

Note *3: Rebar described as @300 is arranged by @2°

Table 3G.4-17

Rebar and Concrete Stresses: Selected Load Combination FWSC-3

Location	Element ID	Concrete Stress (MPa)		Primary Reinforcement Stress (MPa)				
		Calculated	Allowable	Calculated				Allowable
				X-direction*		Y-direction*		
				+Z side*	-Z side*	+Z side*	-Z side*	
Basemat EL 4.65	18	-1.6	-20.7	41.2	-5.7	6.1	6.1	372.2
	227	-0.9		13.5	15.0	4.7	34.9	
	237	-1.1		21.6	8.6	-10.2	30.6	
	16085	-0.7		19.4	16.2	9.1	33.7	
Roof of FPE EL 8.25	51556	-5.0	-25.9	-4.8	39.3	2.4	70.0	372.2
	51558	-1.5		17.8	-3.7	-4.6	-1.5	
	51576	-5.2		58.3	23.8	63.4	-5.2	
	51578	-2.8		34.2	6.5	23.2	-1.5	
Roof of Tank	26007	-0.6	-25.9	-3.5	-2.0	-2.6	-1.4	372.2
	26079	-0.8		20.4	19.3	5.3	-2.3	
	26082	-1.0		20.8	18.8	28.0	23.6	
	26085	-1.0		17.6	12.8	31.9	27.9	
South Wall of FPE	66004	-1.9	-25.9	1.4	-1.0	16.4	-1.6	372.2
	66006	-2.9		23.8	8.1	46.5	5.2	
	66024	-3.5		-4.0	-4.4	29.0	-3.9	
East Wall of FPE	67004	-2.5	-25.9	33.5	14.6	4.2	-6.6	372.2
	67006	-2.0		92.0	54.1	85.4	17.7	
	67024	-6.2		26.6	64.2	-9.6	45.5	
Wall of South Tank	35007	-0.9	-25.9	1.6	3.0	-3.4	3.1	372.2
	35010	-1.2		4.2	15.9	-5.4	-1.0	
	36507	-0.4		24.9	39.4	2.5	-4.8	
	36510	-0.5		21.3	48.7	-1.7	-1.4	
	38507	-0.2		21.5	23.4	-0.5	-1.1	
	38510	-0.2		21.1	26.5	-0.4	-0.7	
	45001	-0.5		6.1	8.3	-1.7	-0.4	
	46501	-0.5		21.5	39.9	-2.0	-2.3	
	48501	-0.2		22.2	27.2	-0.5	-1.3	
Shear Key	72008	-0.1	-20.7	17.7	19.9	17.0	18.6	372.2
	73017	-0.7		6.1	5.9	21.4	22.0	

Note: Negative value means compression.

* for denominations of table columns, see the definition of local coordinate in Figure 3G.4-10

Table 3G.4-18

Rebar and Concrete Stresses: Selected Load Combination FWSC-4

Location	Element ID	Concrete Stress (MPa)		Primary Reinforcement Stress (MPa)				
		Calculated	Allowable	Calculated				Allowable
				X-direction*		Y-direction*		
				+Z side*	-Z side*	+Z side*	-Z side*	
Basemat EL 4.65	18	-3.9	-23.5	180.0	0.5	62.0	6.8	372.2
	227	-5.0		16.1	-29.3	84.2	28.0	
	237	-4.7		127.3	-6.0	95.4	15.7	
	16085	-3.9		-8.4	-24.1	-5.0	-2.1	
Roof of FPE EL 8.25	51556	-2.5	-29.3	42.3	-4.6	26.4	6.4	372.2
	51558	-4.5		47.0	-1.9	5.3	-16.1	
	51576	-8.5		121.2	21.3	117.8	0.3	
	51578	-7.3		68.7	4.0	58.9	-7.4	
Roof of Tank	26007	-3.2	-29.3	29.3	-8.8	25.9	-3.5	372.2
	26079	-5.3		94.2	6.8	78.8	1.3	
	26082	-6.2		142.1	0.3	128.9	15.0	
	26085	-5.2		113.3	-4.2	107.5	17.1	
South Wall of FPE	66004	-10.2	-29.3	59.5	25.8	66.3	-16.7	372.2
	66006	-9.6		84.9	27.7	122.5	13.8	
	66024	-5.1		16.1	-11.2	47.8	-1.9	
East Wall of FPE	67004	-5.3	-29.3	42.5	73.5	-24.4	8.0	372.2
	67006	-8.8		52.7	149.8	12.3	136.2	
	67024	-9.4		35.0	112.7	-9.4	76.5	
Wall of South Tank	35007	-7.1	-29.3	82.4	19.1	37.6	-12.5	372.2
	35010	-5.9		82.3	18.0	36.7	-7.4	
	36507	-5.8		73.6	-5.0	44.3	-9.9	
	36510	-6.4		75.1	-4.8	47.3	-7.2	
	38507	-3.7		88.7	2.6	35.5	-1.4	
	38510	-4.0		87.5	1.2	34.8	-0.8	
	45001	-5.2		83.4	23.2	45.5	-1.8	
	46501	-5.8		73.2	-6.1	50.2	-3.2	
	48501	-4.1		87.6	-0.1	34.9	-0.1	
Shear Key	72008	-0.5	-23.5	24.2	31.9	7.4	14.6	372.2
	73017	-4.1		-31.0	-30.7	3.2	3.8	

Note: Negative value means compression.

* for denominations of table columns, see the definition of local coordinate in Figure 3G.4-10

Table 3G.4-19

Rebar and Concrete Stresses: Selected Load Combination FWSC-6

Location	Element ID	Concrete Stress (MPa)		Primary Reinforcement Stress (MPa)				
		Calculated	Allowable	Calculated				Allowable
				X-direction*		Y-direction*		
				+Z side*	-Z side*	+Z side*	-Z side*	
Basemat EL 4.65	18	-5.5	-23.5	225.2	-1.9	44.3	32.0	372.2
	227	-12.4		29.2	126.0	106.4	118.9	
	237	-13.7		293.7	96.6	192.9	98.5	
	16085	-5.8		-12.6	-35.1	-10.2	11.2	
Roof of FPE EL 8.25	51556	-10.1	-29.3	34.7	-9.7	26.6	103.6	372.2
	51558	-4.9		69.8	6.1	46.1	-18.5	
	51576	-14.8		252.3	74.3	243.3	7.0	
	51578	-8.6		120.9	14.6	63.8	-11.1	
Roof of Tank	26007	-2.4	-29.3	63.7	-11.0	57.2	9.8	372.2
	26079	-6.4		142.9	30.7	72.5	10.8	
	26082	-4.2		179.9	21.7	193.2	42.8	
	26085	-3.0		168.7	11.0	176.9	68.0	
South Wall of FPE	66004	-9.4	-29.3	68.9	32.7	65.4	-14.7	372.2
	66006	-12.1		139.6	63.2	180.1	13.2	
	66024	-7.6		62.8	-15.2	69.5	7.3	
East Wall of FPE	67004	-12.6	-29.3	55.3	116.6	-33.7	45.1	372.2
	67006	-7.0		154.4	209.9	1.9	191.8	
	67024	-16.4		98.4	224.8	-15.2	154.9	
Wall of South Tank	35007	-6.9	-29.3	121.9	59.0	78.5	40.6	372.2
	35010	-11.3		141.0	52.2	71.0	235.6	
	36507	-5.4		127.2	18.4	96.4	28.1	
	36510	-5.2		137.1	28.0	118.5	74.2	
	38507	-2.9		136.7	27.2	49.5	9.8	
	38510	-3.8		150.6	41.8	63.5	15.8	
	45001	-11.4		136.3	104.7	91.8	330.2	
	46501	-4.7		136.5	26.4	134.5	123.7	
	48501	-3.1		154.1	38.2	62.6	16.9	
Shear Key	72008	-1.2	-23.5	59.1	74.9	18.6	36.9	372.2
	73017	-5.8		-36.3	-36.0	65.7	39.0	

Note: Negative value means compression.

* for denominations of table columns, see the definition of local coordinate in Figure 3G.4-10

Table 3G.4-20

Rebar and Concrete Stresses: Selected Load Combination FWSC-7

Location	Element ID	Concrete Stress (MPa)		Primary Reinforcement Stress (MPa)				
		Calculated	Allowable	Calculated				Allowable
				X-direction*		Y-direction*		
				+Z side*	-Z side*	+Z side*	-Z side*	
Basemat EL 4.65	18	-3.2	-23.5	145.2	-0.4	45.8	5.7	372.2
	227	-4.2		20.9	-22.9	67.6	22.8	
	237	-4.3		113.2	-6.0	79.9	12.0	
	16085	-3.1		-5.6	-18.9	-3.7	-1.4	
Roof of FPE EL 8.25	51556	-1.9	-29.3	31.8	-3.8	19.0	5.7	372.2
	51558	-3.1		32.0	-0.3	2.2	-12.2	
	51576	-5.8		94.6	19.4	80.2	-0.3	
	51578	-5.3		50.8	4.0	41.5	-5.7	
Roof of Tank	26007	-2.9	-29.3	32.7	-5.9	34.0	0.8	372.2
	26079	-3.8		67.8	4.6	64.3	3.4	
	26082	-4.8		105.3	-1.6	95.9	12.0	
	26085	-4.6		97.0	-4.1	84.5	12.9	
South Wall of FPE	66004	-6.8	-29.3	44.9	29.6	60.2	-12.0	372.2
	66006	-7.9		69.1	17.8	103.1	10.3	
	66024	-3.5		10.5	-9.2	33.1	-0.9	
East Wall of FPE	67004	-4.1	-29.3	37.3	58.7	-18.7	3.5	372.2
	67006	-6.9		44.7	125.2	11.1	110.4	
	67024	-7.4		31.2	95.2	-8.2	58.9	
Wall of South Tank	35007	-4.7	-29.3	61.1	14.0	19.2	-10.4	372.2
	35010	-5.4		71.1	16.8	37.2	-6.1	
	36507	-5.1		63.4	-1.3	38.7	-6.8	
	36510	-5.9		69.2	-1.2	55.2	-3.9	
	38507	-2.9		63.9	0.6	28.3	-0.4	
	38510	-3.1		62.1	-0.6	26.2	0.2	
	45001	-4.9		74.4	21.3	55.8	3.1	
	46501	-4.5		59.1	-3.5	40.0	-1.9	
	48501	-3.2		61.9	-1.5	25.7	0.5	
Shear Key	72008	-0.4	-23.5	20.3	27.5	6.7	13.1	372.2
	73017	-3.3		-24.0	-24.1	11.7	12.8	

Note: Negative value means compression.

* for denominations of table columns, see the definition of local coordinate in Figure 3G.4-10

Table 3G.4-21

Calculation Results for Transverse Shear

Location	Element ID	Load ID	d (m)	ρ_w (%)	ρ_v (%)	Shear Forces (MN/m)				Vu/ϕVn
						Vu	Vc	Vs	ϕVn	
Basemat EL 4.65	18	FWSC-6	2.243	0.673	0.242	1.016	1.368	2.247	3.073	0.331
	227	FWSC-6	2.055	0.858	0.484	2.616	1.122	4.118	4.454	0.587
	237	FWSC-6	2.044	0.862	0.484	2.365	1.216	4.096	4.515	0.524
	16085	FWSC-6	2.043	0.863	0.242	1.156	1.618	2.047	3.115	0.371
Roof of FPE EL 8.25	51556	FWSC-6	0.466	1.080	0.000	0.039	0.409	0.000	0.348	0.111
	51558	FWSC-6	0.499	1.008	0.000	0.138	0.451	0.000	0.383	0.359
	51576	FWSC-6	0.450	1.118	0.000	0.231	0.427	0.000	0.363	0.638
	51578	FWSC-6	0.458	1.100	0.000	0.115	0.682	0.000	0.579	0.199
Roof of Tank	26007	FWSC-6	0.473	0.682	0.000	0.005	0.427	0.000	0.363	0.013
	26079	FWSC-6	0.451	0.716	0.000	0.097	0.452	0.000	0.384	0.254
	26082	FWSC-6	0.476	0.678	0.000	0.105	0.457	0.000	0.389	0.271
	26085	FWSC-6	0.487	0.663	0.000	0.105	0.471	0.000	0.400	0.262
South Wall of FPE	66004	FWSC-4	0.422	2.387	0.000	0.217	0.460	0.000	0.391	0.555
	66006	FWSC-6	0.436	2.874	0.710	0.691	0.274	1.282	1.322	0.523
	66024	FWSC-4	0.443	1.701	0.000	0.194	0.493	0.000	0.419	0.462
East Wall of FPE	67004	FWSC-6	0.485	1.037	0.000	0.218	0.663	0.000	0.564	0.387
	67006	FWSC-6	0.436	2.856	0.710	0.202	0.255	1.282	1.307	0.155
	67024	FWSC-6	0.443	1.702	0.000	0.236	0.493	0.000	0.419	0.563
Wall of South Tank	35007	FWSC-6	0.735	2.285	0.631	0.501	0.280	1.920	1.870	0.268
	35010	FWSC-6	0.718	1.407	0.631	0.409	0.163	1.876	1.733	0.236
	36507	FWSC-6	0.779	1.720	0.000	0.071	0.757	0.000	0.644	0.110
	36510	FWSC-4	0.772	1.735	0.000	0.083	0.753	0.000	0.640	0.129
	38507	FWSC-6	0.835	0.804	0.000	0.118	1.020	0.000	0.867	0.136
	38510	FWSC-4	0.835	0.804	0.000	0.220	0.894	0.000	0.760	0.290
	45001	FWSC-6	0.718	1.407	0.631	0.525	0.000	1.876	1.594	0.329
	46501	FWSC-6	0.774	0.867	0.000	0.033	0.326	0.000	0.277	0.117
	48501	FWSC-7	0.835	0.804	0.000	0.089	0.810	0.000	0.688	0.129
Shear Key	72008	FWSC-6	1.798	0.419	0.000	0.374	1.467	0.000	1.247	0.300
	73017	FWSC-6	1.737	0.741	0.177	0.259	0.978	1.273	1.913	0.135

Table 3G.4-22

Factors of Safety for Foundation Stability

Load Combination	Overturning		Sliding		Floatation	
	Required	Actual	Required	Actual	Required	Actual
D + H + E'	1.1	129.1	1.1	1.13	--	--
D + F'	--	--	--	--	1.1	7.4

Where,
D = Dead Load
H = Lateral soil pressure
E' = Safe Shutdown Earthquake
F' = Buoyant forces of design basis flood

Table 3G.4-23

Maximum Soil Bearing Stress Involving SSE

	Site Condition*		
	Soft	Medium	Hard
Bearing Stress (MPa)	0.44	0.54	0.67

*: See Table 3A.3-1 for site properties. For site specific application, use the larger value or a linearly interpolated value of the applicable range of shear wave velocities at the foundation level.

Figure 3G.4-1. FWSC Concrete Outline and Typical Rebar Arrangement

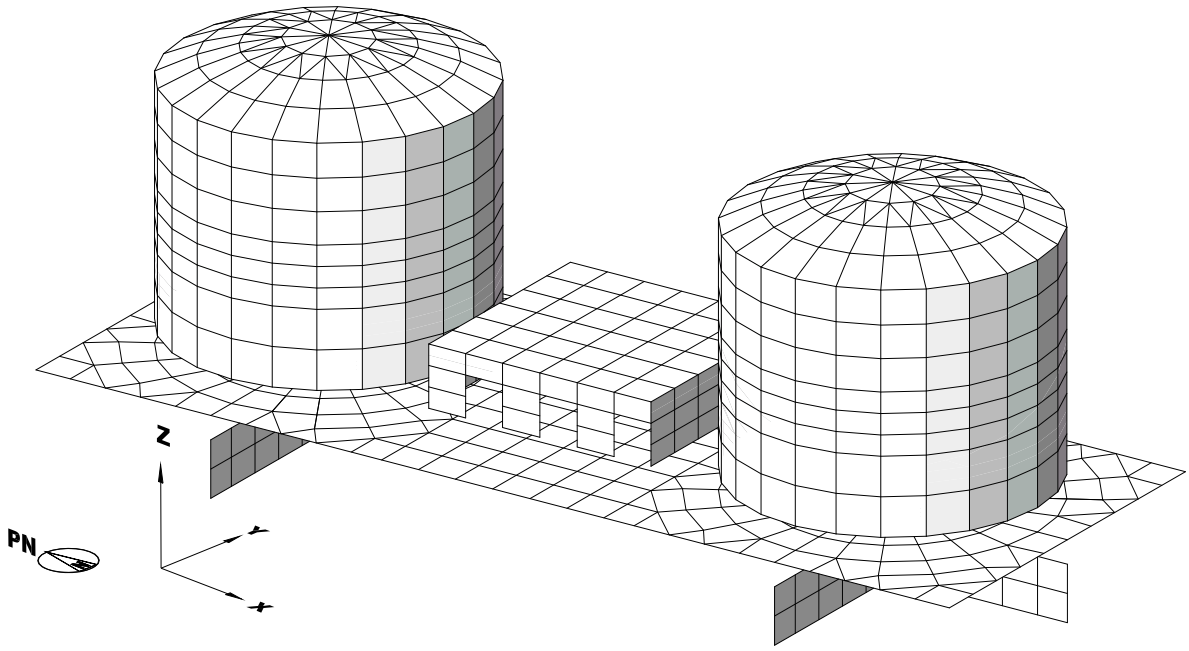

Whole View

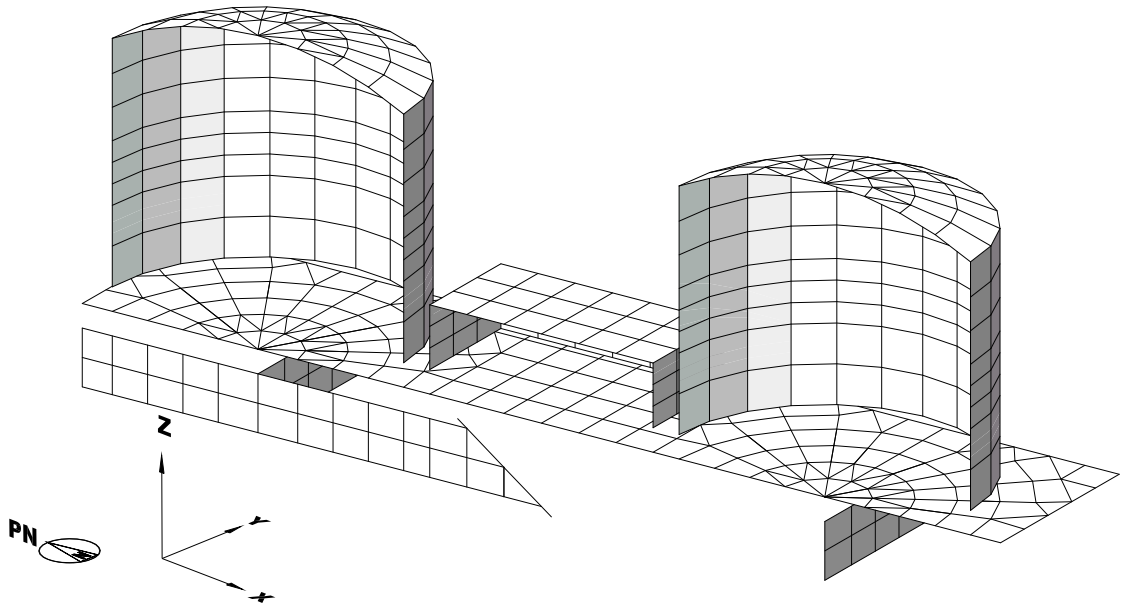

Cut View

Figure 3G.4-2. Finite Element Model of FWSC (Isometric View)

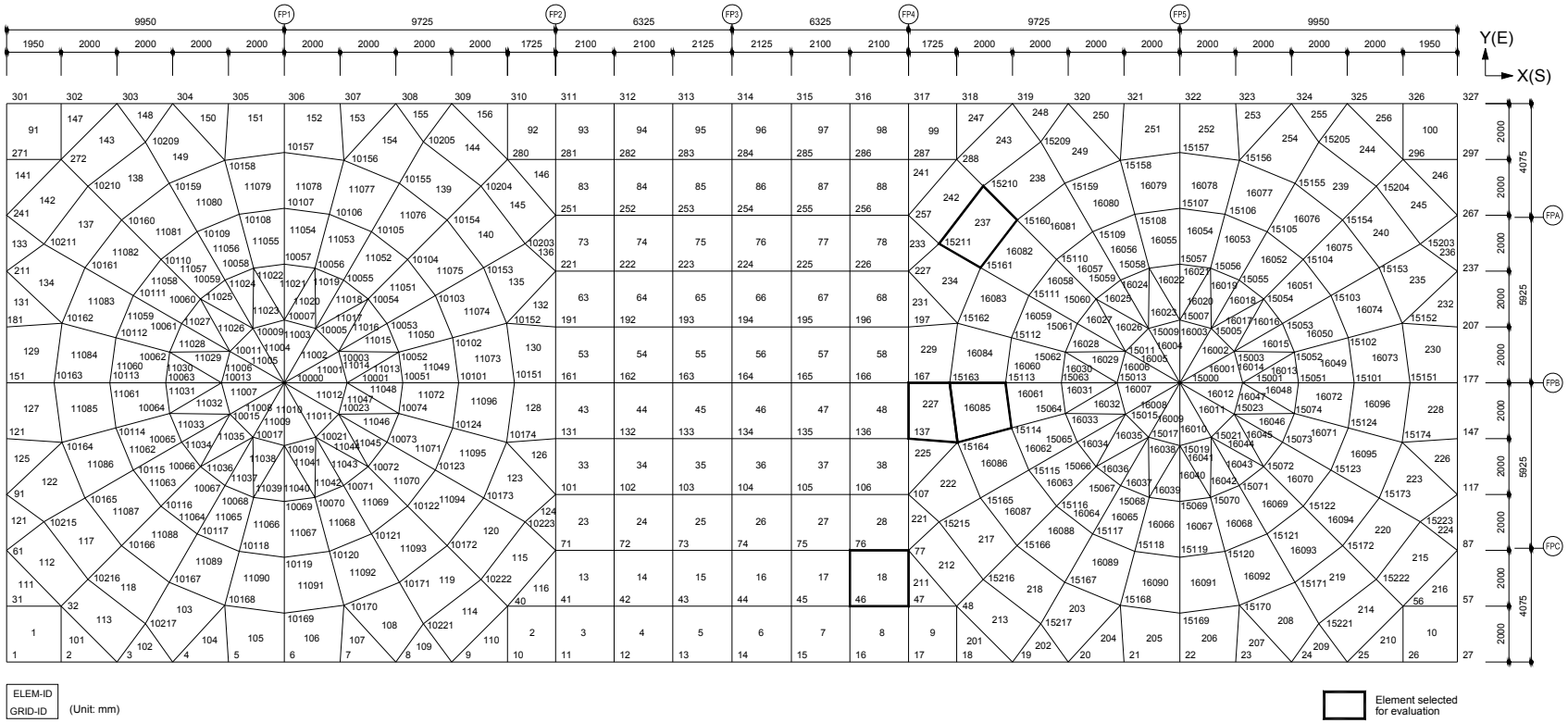

Figure 3G.4-3a. Finite Element Model of FWSC (Foundation Mat)

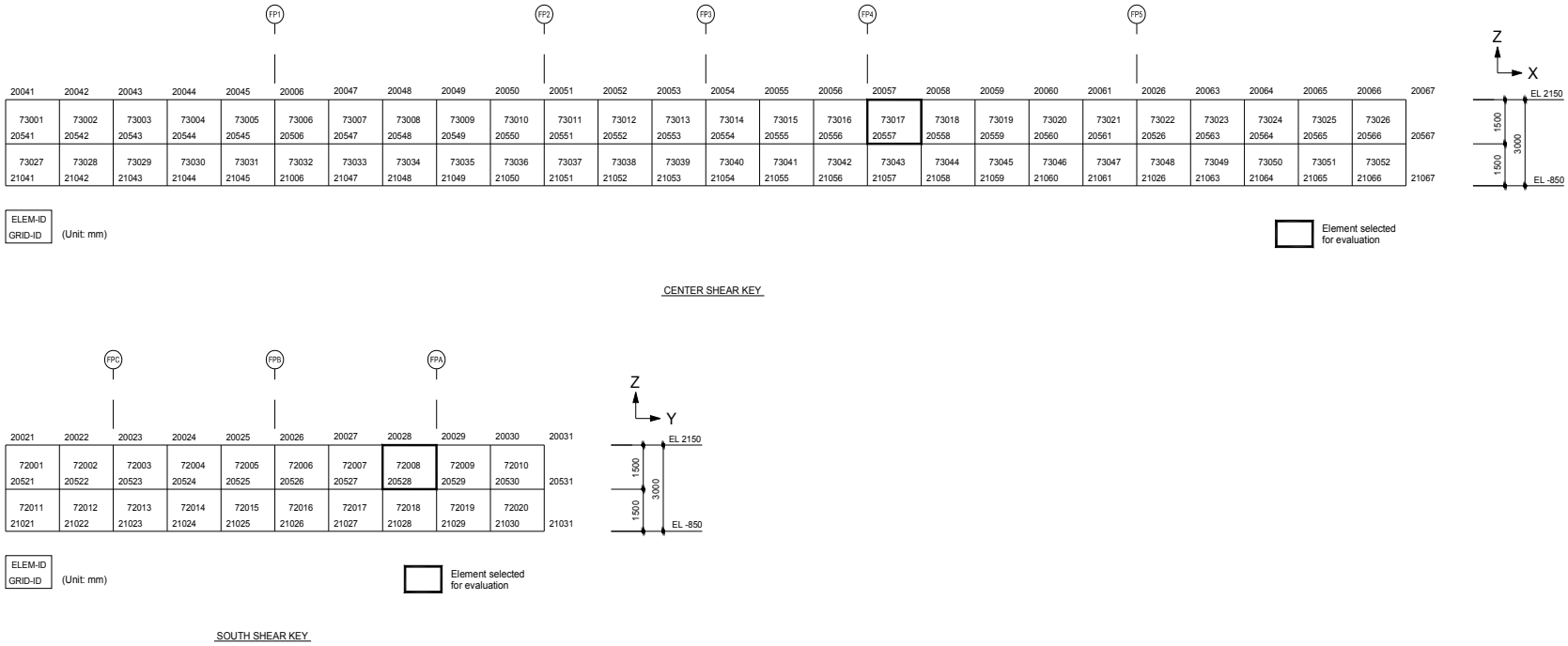

Figure 3G.4-3b. Finite Element Model of FWSC (Center Shear Key and South Shear Key of Basemat)

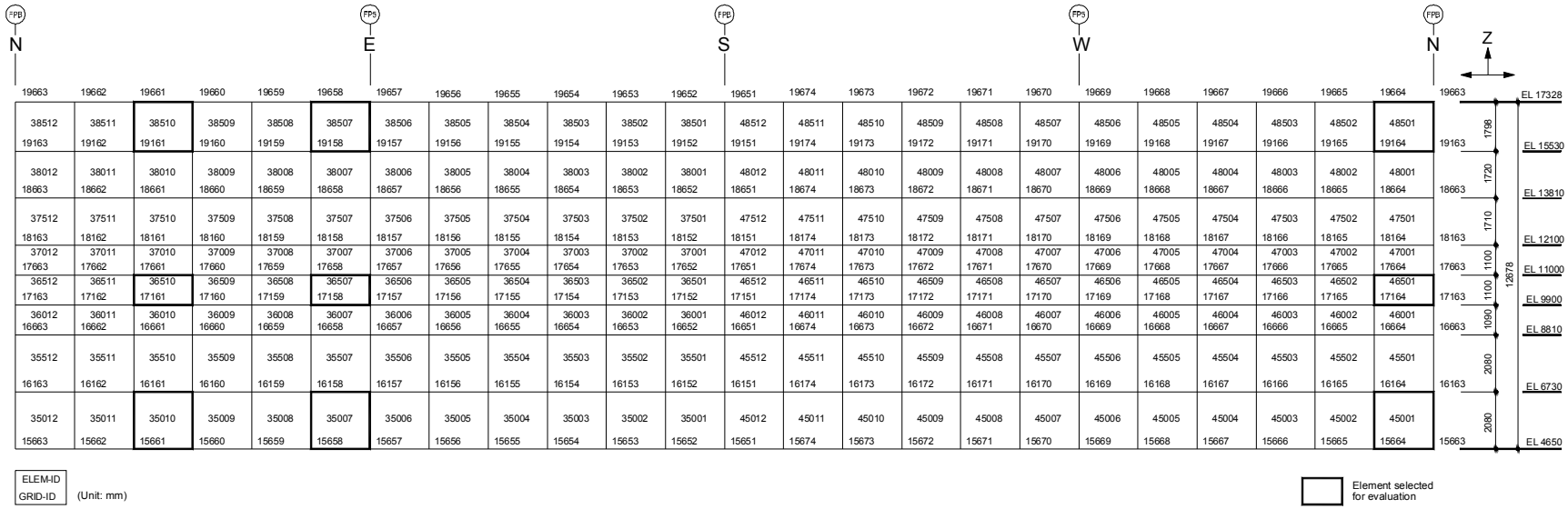

Figure 3G.4-4. Finite Element Model of FWSC (South FWS Wall)

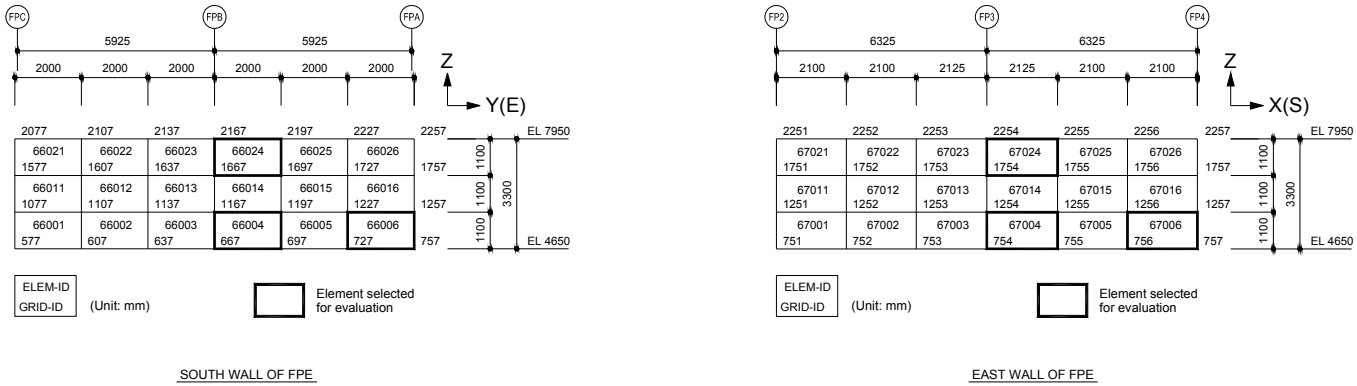

Figure 3G.4-5. Finite Element Model of FWSC (FPE Wall: East and South)

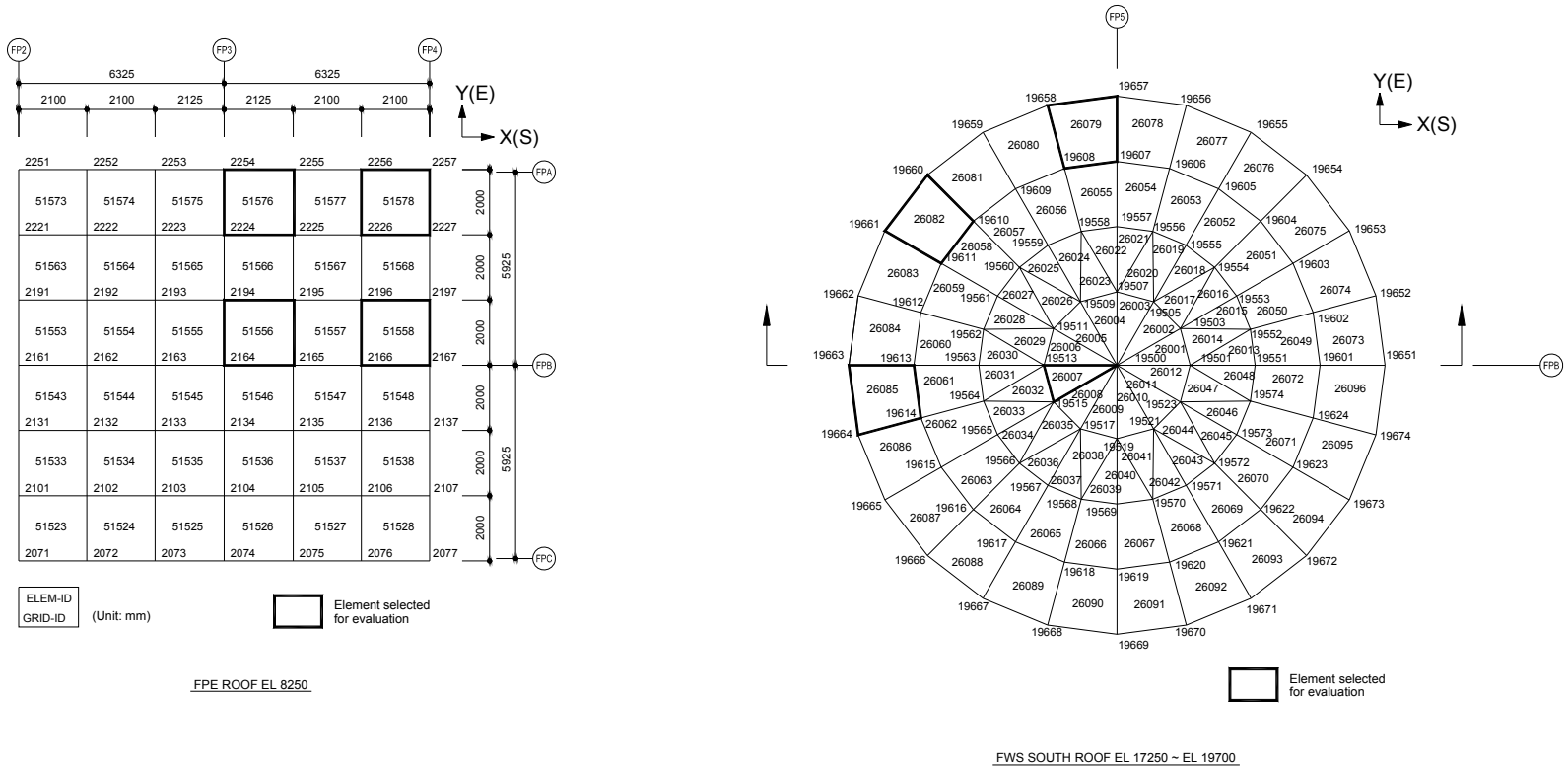

Figure 3G.4-6. Finite Element Model of FWSC (FPE Roof Slab, South FWS Roof Slab)

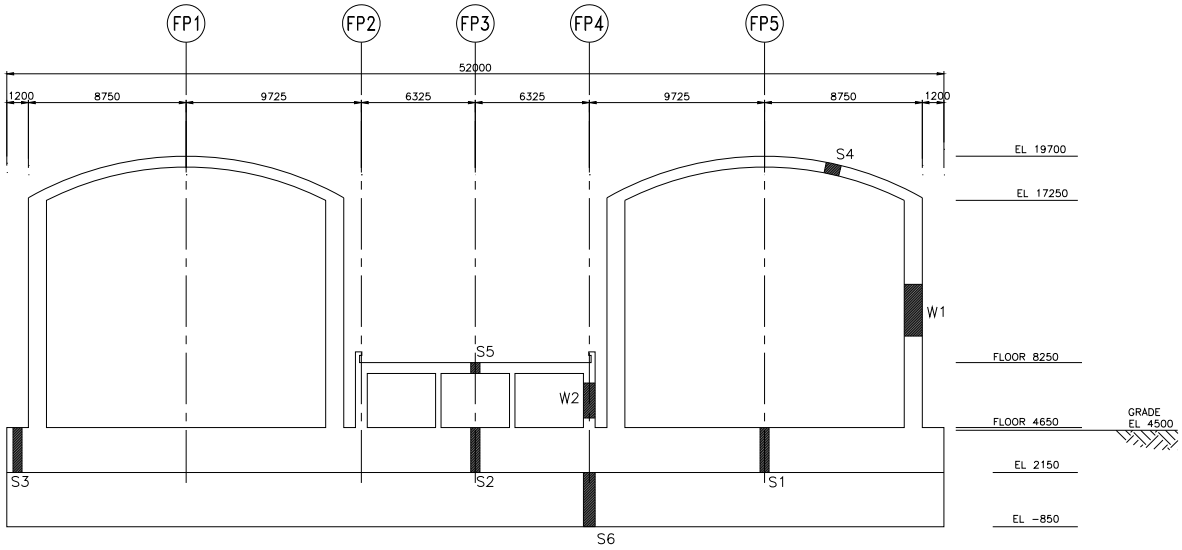

Figure 3G.4-7. Sections Where Thermal Loads Are Defined

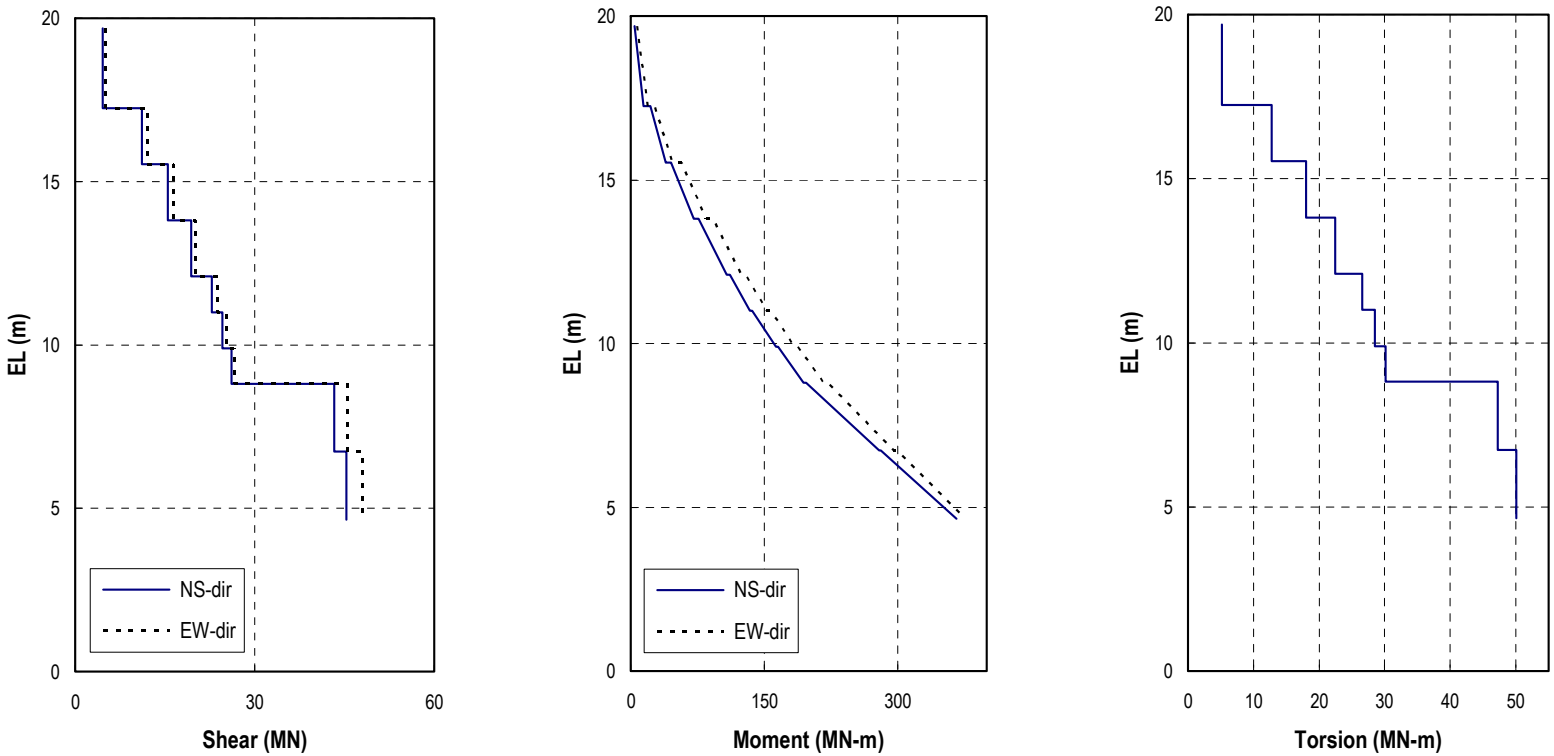

Figure 3G.4-8. Design Seismic Shears and Moments for FWSC (FWS)

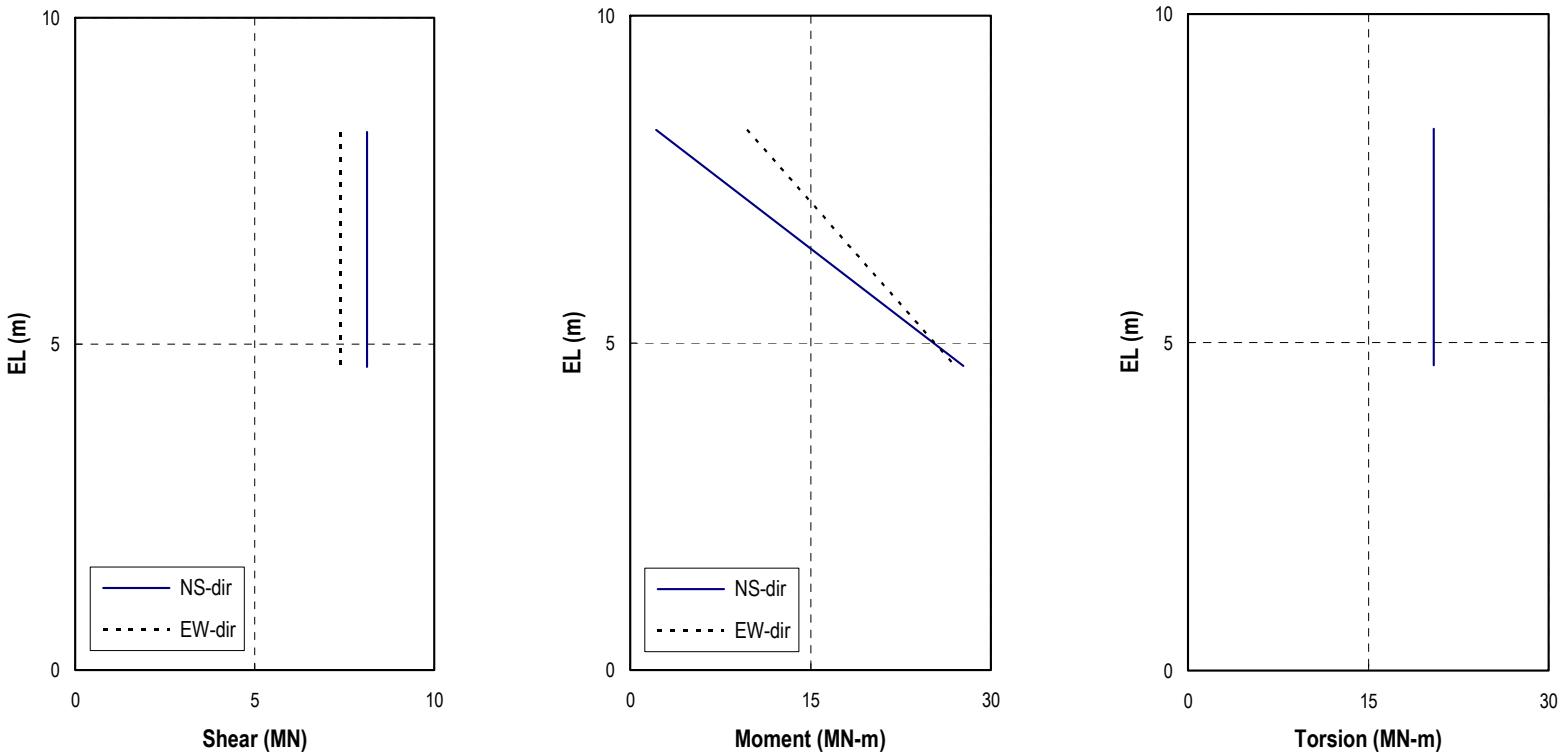

Figure 3G.4-9. Design Seismic Shears and Moments for FWSC (FPE)

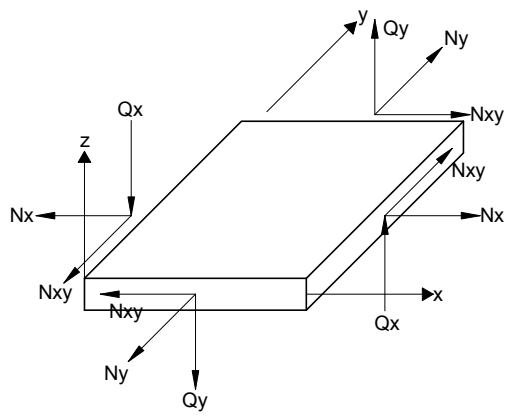

Membrane and Shear Forces

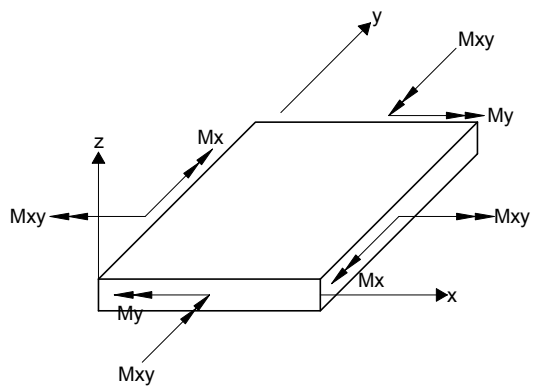

Moments

Definition of Element Coordinate System

Structure	x	y	z
Wall in N-S direction	horizontal	vertical	toward West
Wall in E-W direction	horizontal	vertical	toward North
Tank Wall	horizontal	vertical	outward
Foundation Mat & Roof	toward South	toward East	Upward
Shear key in N-S direction	horizontal	vertical	toward West
Shear key in E-W direction	horizontal	vertical	toward North

Figure 3G.4-10. Force and Moment in Shell Element

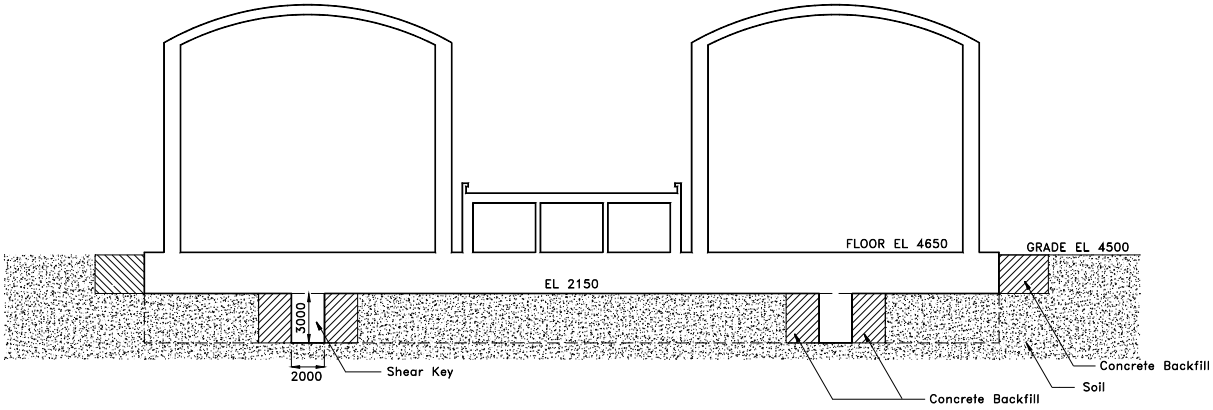

Note: Excavation and backfill method is determined considering actual site conditions.

Figure 3G.4-11. Shear Keys and Concrete Backfill in Sliding Evaluation

3H. EQUIPMENT QUALIFICATION DESIGN ENVIRONMENTAL CONDITIONS

3H.1 INTRODUCTION

This appendix specifies plant environmental conditions, which envelop the actual environment expected over the plant life, for which safety-related equipment (Section 3.11) is designed and qualified. The plant conditions considered in defining the environmental conditions are normal operation including anticipated operational occurrences, and accident conditions including post-accident operations. The accident condition considered is a hypothesized single event (not reasonably expected during the course of plant operation) that has the potential to cause severe environmental conditions for safety-related equipment. The specified accident conditions are based on significantly conservative assumptions.

The primary environmental parameters addressed are pressure, temperature, relative humidity, radiation, and chemical conditions. Safety-related equipment inside containment is designed and qualified for the environmental conditions resulting from the most limiting Design Basis Accident (DBA) and meets the Environmental Qualification (EQ) program acceptance criteria. The parameters specified in this appendix do not include margins that may be required to satisfy applicable codes and standards for equipment qualification. The radiation data specified in this appendix is intended to provide a conservative basis for equipment qualification and is not intended to limit or justify personnel access.

The following areas containing safety-related equipment are considered for equipment qualification purposes:

- Containment Vessel
- Reactor Building (RB)
- Control Building (CB)

3H.2 PLANT ZONES

3H.2.1 Containment Vessel

The containment vessel is divided into a drywell region and a wetwell region with an interconnecting vent system. The containment vessel is shown in Figure 6.2-1. The drywell volume is divided into an upper drywell and lower drywell by the Reactor Pressure Vessel (RPV) supports and support pedestal. The upper and lower drywell is interconnected. Table 3.2-1 identifies the safety-related equipment located within the containment vessel.

For normal operating conditions, the containment vessel is divided into three thermodynamic and four radiation zones to represent the enveloping levels of the environmental conditions. The environmental zones are shown in Table 3H-2 and Table 3H-5. For accident conditions, zones a-1 and a-2 have the same thermodynamic properties and the containment vessel (zones b-1 through b-3) has the same radiation properties with the exception of the wetwell (zone b-4).

3H.2.2 Outside Containment Vessel

The area outside the containment vessel includes:

- Control Building
- Reactor Building outside containment

The region inside the RB surrounding the containment encloses penetrations through the containment. The Control Room Habitability Area (CRHA) includes the main control room and areas adjacent to the control room containing operator facilities. Also located in the CB are safety-related Distributed Control and Information System (DCIS) rooms, located at elevation -7400 mm. Major equipment zones are shown on the RB arrangement drawing (Figures 1.2-1 to 1.2-9).

3H.3 ENVIRONMENTAL CONDITIONS

Table 3H-1 contains a cross listing of the environmental data tables arranged by location and by type of condition.

3H.3.1 Plant Normal Operating Conditions

Tables 3H-2 through 3H-4 define the thermodynamic conditions (pressure, temperature and humidity) for normal operating conditions for areas containing safety-related equipment. Figures showing equipment location and system configurations are referenced in each table. Section 12.3 defines the radiation conditions for the Reactor Building and Control Building for normal operating conditions. Table 3H-5 specifies the radiation environmental conditions inside the containment vessel for normal operating conditions. Specific radiation environment conditions for equipment are determined through the equipment qualification program based on actual location. Section 9.4 defines the Fuel Building thermodynamic conditions for normal operating conditions.

3H.3.2 Accident Conditions

Thermodynamic conditions for safety-related equipment in the containment vessel, CB and RB are presented in Tables 3H-8 through 3H-10 for accident conditions. Heat loads for the evaluated post accident periods are specified in Table 3H-12. In general, the most severe environmental conditions result from a postulated reactor coolant line break inside the containment, Loss-Of-Coolant-Accident (LOCA) (bounding case) plus Loss Of Offsite Power (LOOP), see Chapter 6 for detailed information. However, accident conditions were also considered for ruptures occurring in the steam tunnel and breaks in the RWCU/SDC System outside the containment, High Energy Line Break (HELB) plus LOOP, see Chapter 6 for detailed information. Tables 3H-6 and 3H-7 list typical radiation environmental qualification conditions inside the RB and the CB. Table 3H-11 specifies the radiation environment conditions inside the containment vessel. The EQ program confirms explicit radiation and thermodynamic conditions during accidents. The limiting thermodynamic conditions in the Fuel Building results from the boiling of the spent fuel pool. The thermodynamic conditions during an accident when the spent fuel pool boils is a limiting temperature of 104°C (219°F), with 100% relative humidity and a pressure of 14 kPaG (2 psig).

3H.3.2.1 Transient Room Temperature Analysis

The performance evaluation for environmental qualification show conformance to the requirements identified in Section 3.11.

Acceptance Criteria

The design meets the following Acceptance Criteria:

- **Environmental Qualification Maximum Temperatures** – The maximum temperature limit for which the safety-related equipment is qualified is not exceeded. The maximum temperature limit is specified in Tables 3H-9 and 3H-10.
- **Control Room Habitability Area Temperature** – The maximum bulk temperature meets the acceptance criteria stated in Subsection 9.4.1.

Analysis Assumptions

The analysis event assumptions are summarized below. Initial conditions and assumptions can be found in Table 3H-14. Heat loads used in the analysis are found in Table 3H-12.

- The event presented is the most limiting between LOCA or HELB with each concurrent with LOOP.
- Normal Heating, Ventilation and Air Conditioning (HVAC) heating and/or cooling is lost for the first 72 hours of the accident.
- After 72 hours the safety-related equipment heat loads are no longer accounted for because the safety-related equipment needed to maintain safe shutdown no longer requires power to perform their safety-related functions. Normal HVAC mitigates the safety-related equipment heat loads when power is available.
- During the first 2 hours of the event the nonsafety-related heat loads in the RB and in the CB outside of the CRHA powered by the nonsafety-related batteries are considered in the analysis.
- Safety-related heat loads are considered throughout the duration of the event when power is available.
- The CRHA calculation only considers safety-related heat loads. Nonsafety-related equipment deenergizes if active cooling is not available.
- Room to room interactions are considered in all calculations.
- Outside air intake from the EFU is considered for the CRHA calculation during maximum and minimum temperature conditions.
- No credit is taken for heat transfer to the ground.

Analysis Results

As shown in Table 3H-15, the environmental qualification temperatures for safety-related equipment is not exceeded during the limiting event based on the presented detailed thermo-hydraulic analyses performed with CONTAIN 2.0. When rooms are located on the same level and have similar dimensions and internal heat loads, the most unfavorable room is taken to be the representative room for that group of rooms. Solar heat loads were applied to rooms located above grade. Table 3H-15 summarizes the representative room temperatures and locations of the room groups.

During the transient event concurrent with LOOP and loss of normal HVAC the heat generated in the rooms is absorbed by the surrounding walls, floor and ceiling. The building concrete acts

as a heat sink for passive heat removal. The room temperature rises quickly because the heat absorption capacity of air is very low. The heat transfer to the walls, floor and ceiling maintain the environmental temperatures below the qualification temperature.

During wintertime conditions the RB and CB are isolated and equipment room cool down is insignificant. The case for the CRHA post 72 hours presented in Table 3H-15 which accounts for heat loads from people and minimal lighting only, demonstrates that the cool down for the RB and CB are inconsequential. The injection of ambient air at wintertime conditions when safety-related heat loads are not present provides a faster cool down rate than the other rooms located in the RB and CB. For the winter conditions the 0% exceedance minimum dry bulb ambient outside air temperature (-40°C/°F) was considered. For the summer conditions the 0% exceedance coincident maximum dry bulb and wet bulb ambient outside air temperature [47.2°C (117°F) DBt and 26.7°C (80°F) WBt] was considered. The daily temperature range applied was Δ 15°C (27°F).

The temperature in the CRHA remains below the temperature rise acceptance criteria outlined in Subsection 9.4.1. The 0% exceedance coincident maximum temperature case is presented in Figure 3H-2. Cases were considered to ensure that the 0% exceedance maximum outside air temperature was bounding and 100% relative humidity with additional moisture created by CRHA occupants (latent load) would not lead to a 72 hour CRHA air temperature higher than the 0% exceedance coincident maximum temperature case, and ensure the heat absorbed by the CRHA structures would not be adversely impacted by the condensation created. The results of this analysis show that higher humidity ratios, and subsequently higher specific enthalpy, do not affect the maximum temperature reached with little condensation occurring on the walls of the control room. The concrete heat sink provides enough thermal mass to keep the CRHA within limits during the limiting event by absorbing heat loads or heating ambient air during summer or winter conditions.

3H.3.3 Water Quality

Reactor water design quality characteristics during normal operation are:

- PH range: 5.6 to 8.6
- Silica (as SiO2) ≤ 200 ppb (100 ppb operating target)
- Conductivity at 25°C ≤ 0.1 µS/cm (0.08 µS/cm operating target)
- Dissolved Oxygen (as O2) ≤ 300 ppb
- Corrosion product metals ≤ 6 ppb

The Standby Liquid Control (SLC) System injects borated water into the RPV during DBA LOCA. Although there is no caustic spray in the ESBWR design, the post-accident suppression pool pH can vary due to the production of cesium-hydroxide and radiation-induced acids, as described in detail in Subsection 15.4.4.

3H.3.4 Locations of Safety-Related Equipment

Table 3H-12 identifies the potential location for safety-related equipment assumed for each room or set of rooms and the evaluated heat load capacity. This table also contains the evaluated heat load for nonsafety-related rooms, because nonsafety-related equipment is conservatively

assumed to continue to be powered by nonsafety-related batteries during the first 2 hours of LOOP and thus contributes to the room heat up during LOOP and a DBA. The EQ program confirms equipment locations and heat loads do not cause temperatures to exceed the specified acceptance criteria.

3H.3.5 Mild Environment Conditions

The environment parameter limits that constitute mild environment conditions are identified in Table 3H-13.

3H.3.6 COL Information

None.

3H.4 REFERENCES

3H.4-1 10 CFR 50 Appendix J, “Primary Reactor Containment Leakage Testing for Water-Cooled Power Reactors.”

3H.4-2 NUREG-1465, “Accident Source Terms for Light-Water Nuclear Power Plants,” February 1995.

3H.4-3 Not used.

3H.4-4 10 CFR Part 50, Appendix A, General Design Criterion 2, "Design Bases for Protection Against Natural Phenomena.”

3H.4-5 10 CFR Part 50, Appendix A, General Design Criterion 4, "Environmental and Dynamic Effects Design Bases.”

3H.4-6 10 CFR Part 50, 50.49, "Environmental Qualification of Electric Equipment Important to Safety of Nuclear Power Plants.”

3H.4-7 Regulatory Guide 1.209-2007, “Guidelines for Environmental Qualification of Safety-Related Computer-Based Instrumentation and Control Systems in Nuclear Power Plants.”

Table 3H-1

Cross Reference of Plant Environmental Data and Location

Plant Environmental Data	Location		
	Containment Vessel	Reactor Building	Control Building
Thermodynamic (Normal Conditions)	Table 3H-2	Table 3H-3	Table 3H-4
Thermodynamic (Accident Conditions)	Table 3H-8	Table 3H-9	Table 3H-10
Radiation	Table 3H-5 (Normal Conditions) Table 3H-11 (Accident Conditions)	Table 3H-6	Table 3H-7
Room Heat Loads	Table 3H-12	Table 3H-12	Table 3H-12
Thermodynamic/Radiation (Mild Environment Limits)	Table 3H-13	Table 3H-13	Table 3H-13
Thermodynamic Analytical Initial Conditions and Assumptions	Chapter 6	Table 3H-14	Table 3H-14
Thermodynamic Analysis Results	Chapter 6	Table 3H-15	Table 3H-15

Table 3H-2

Thermodynamic Environment Conditions Inside Containment Vessel for Normal Operating Conditions

Plant Zone/Typical Equipment[1]	Pressure[2][3] kPaG (psig)	Temperature[3] °C (°F)	Relative Humidity[3] %
(a-1) Upper drywell and upper area of lower drywell Figure 6.2-1)	9.0 (1.3)	57 (135) Ave 65 (150) Max	Not Controlled
(a-2) Lower area of lower drywell (Figure 6.2-1)	9.0 (1.3)	57 (135) Ave 60 (140) Max	Not Controlled
(a-3) Wetwell - pool and gas space (Figure 6.2-1)	5.3 (0.76) Nom 9.0 (1.3) Max 0 (0) Min	43 (110) Max[4]	100

(1) The containment atmosphere is nitrogen.

(2) The containment vessel is pressurized during leak rate tests once per refueling outage in accordance with 10 CFR 50, Appendix J.

(3) The worst combination of conditions in the table sets the design requirements of equipment.

(4) The suppression pool water may reach 46°C (115°F) during testing. The maximum abnormal temperature is 49°C (120°F).

Table 3H-3

Thermodynamic Environment Conditions Inside Reactor Building for Normal Operating Conditions

Plant Zone/Typical Equipment	Pressure[1] kPaG (psig)	Temperature °C (°F)	Relative Humidity
Hydraulic Control Unit (HCU) Rooms HCU, RPS solenoids and RPV water level instrument racks Rooms No 1110, 1120, 1130, 1140 (Figure 1.2-1)	Negative Pressure	29 (85) Max 18 (65) Min	Not controlled
Battery Rooms Div 1, 2, 3 and 4 batteries Rooms No 1210, 1220, 1230, 1240 (Figure 1.2-2)	Negative Pressure	29 (85) Max 18 (65) Min	Not controlled
Div 1, 2, 3 and 4 commodity chases Electrical cables Rooms No 1211, 1221, 1231, 1241 (Figure 1.2-2)	Positive Pressure	40 (104) Max 10 (50) Min	Not controlled
Electrical Division Rooms Div 1, 2, 3 and 4 electrical and electronic equipment Rooms No 1311, 1321, 1331, 1341 (Figure 1.2-3)	Positive Pressure	29 (85) Max 18 (65) Min	Not controlled
Lower drywell non-divisional electrical and mechanical penetration Outboard containment isolation valves Rooms No 1300, 1301, 1302, 1303 (Figure 1.2-3)	Positive Pressure	40 (104) Max 10 (50) Min	Not controlled
Div 1, 2, 2 and 4 electrical penetration rooms Electrical cables and penetrations Rooms No 1312, 1322, 1332, 1342 (Figure 1.2-3)	Positive Pressure	40 (104) Max 10 (50) Min	Not controlled
Remote shutdown panel Rooms No 1313, 1323 (inside rooms 1311 and 1321) (Figure 1.2-3)	Positive Pressure	29 (85) Max 18 (65) Min	Not controlled
Non-divisional electrical equipment Safety-related DCIS panels Rooms No 1500, 1501, 1502, 1503 (Figure 1.2-5)	Positive Pressure	29 (85) Max 18 (65) Min	Not controlled

Table 3H-3

Thermodynamic Environment Conditions Inside Reactor Building for Normal Operating Conditions

Plant Zone/Typical Equipment	Pressure[1] kPaG (psig)	Temperature °C (°F)	Relative Humidity
Div 1, 2, 3 and 4 electrical penetrations (EL.13570) Electrical cables and penetration Rooms No 1610, 1620, 1630, 1640 (Figure 1.2-6)	Negative Pressure	40 (104) Max 10 (50) Min	Not controlled
Div 1, 2, 3 and 4 corridors rooms (access to penetration area), divisional electrical cables and safety-related DCIS RMUs Rooms No 1710, 1720, 1730, 1740 (Figure 1.2-7)	Negative Pressure	29 (85) Max 18 (65) Min	Not controlled
Div 1, 2, 3 and 4 electrical penetration (EL. 17500) and Mechanical penetrations Electrical cables and penetrations. Outboard isolation valves Rooms No 1711, 1721, 1731, 1741 and 1712, 1722, 1732, 1742 (Figure 1.2-7)	Negative Pressure	40 (104) Max 10 (50) Min	Not controlled
SLC tank rooms SLC tank instrumentation Rooms No 1713, 1723 (Figure 1.2-7)	Negative Pressure	29 (85) Max 18 (65) Min	Not controlled
Main Steam Tunnel Main Steamline (MSL) isolation valves MSL drain isolation valves Feedwater (FW) isolation valves Rooms No 1770 (Figure 1.2-7)	Negative Pressure	40 (104) Max 10 (50) Min	Not controlled
IC/PCCS pools Isolation Condenser System (ICS) pools instrumentation Rooms No 18P3A/B/C/D, 18P4A/B/C/D/E/F, 18P5A/B/C, 18P6A/B/C (Figure 1.2-8)	Negative Pressure	40 (104) Max 10 (50) Min	100/Water

(1) Relative to surrounding areas.

Table 3H-4

Thermodynamic Environment Conditions Inside Control Building for Normal Operating Conditions

Plant Zone/Typical Equipment	Pressure kPaG (psig)	Temperature °C (°F)	Relative Humidity %
Safety-related portions of CRHA Ventilation Subsystem Rooms No 3406, 3407 (Figure 1.2-5)	Positive Pressure	40 (104)Max 10 (50) Min	60 Max 25 Min
Electrical chases Rooms No 3250, 3261 (Figure 1.2)	Positive Pressure	25.6 (78) Max 18.3 (65) Min	60 Max 25 Min
Control Room Habitability Area Main control room panels (Figure 3H-1)	Positive Pressure	25.6 (78) Max 22.8 (73) Min	60 Max 25 Min
Div 1, 2, 3 and 4 electrical rooms Safety-related DCIS panels Rooms No 3110, 3120, 3130 and 3140 (Figure 1.2-2)	Positive Pressure	25.6 (78) Max 18.3 (65) Min	60 Max 25 Min

Table 3H-5

Radiation Environment Conditions Inside Containment Vessel for Normal Operating Conditions

Plant Zone/Typical Equipment	Operating Dose Rate(1)(2)		Integrated Dose(2)(3)	
	Gamma (R/h)	**Beta** (R/h)	**Gamma** (R)	**Beta** (R)
(b-1) Upper drywell (Figure 6.2-1)	2.61 E+1	Negl.(4)	1.4 E+7	Negl.
(b-2) Upper area of lower drywell (Figure 6.2-1)	2.61 E+1	Negl.	1.4 E+7	Negl.
(b-3) Lower area of lower drywell (Figure 6.2-1)	1.98 E+1	Negl.	1.0 E+7	Negl.
(b-4) Wetwell - Suppression pool and gas space (Figure 6.2-1)	< 1.4	Negl.	7.4 E+5	Negl.

(1) Nominal operating dose rate is at 100% rated power and located at 30 cm (0.98 ft) from radiation source. Specific radiation environment conditions for equipment are determined through the equipment qualification program based on actual location.

(2) The operating dose rates are based on ABWR plant operating conditions and adjusted for ESBWR using appropriate scaling factors.

(3) Integrated dose means the integrated value over 60 years.

(4) Negl.- Value less than 0.001 mR/h

Table 3H-6

Typical Radiation Environmental Qualification Conditions Inside Reactor Building

Plant Zone/Typical Equipment	Integrated gamma dose (rads)
Hydraulic Control Unit (HCU) Rooms HCU, RPS solenoids and RPV water level instrument racks Rooms No 1110, 1120, 1130, 1140 (Figure 1.2-1)	$< 10^{4(1)}$ $< 10^{6}$
Battery Rooms Div 1, 2, 3 and 4 batteries Rooms No 1210, 1220, 1230, 1240 (Figure 1.2-2)	$< 10^{6}$
Div 1, 2, 3 and 4 commodity chases Electrical cables Rooms No 1211, 1221, 1231, 1241 (Figure 1.2-2)	$< 10^{6}$
Electrical Division Rooms Div 1, 2, 3 and 4 electrical and electronic equipment Rooms No 1311, 1321, 1331, 1341 (Figure 1.2-3)	$< 10^{4(1)}$ $< 10^{6}$
Lower drywell non-divisional electrical and mechanical penetration Outboard containment isolation valves Rooms No 1300, 1301, 1302, 1303 (Figure 1.2-3)	$< 10^{6}$
Div 1, 2, 3 and 4 electrical penetration rooms Electrical cables and penetrations Rooms No 1312, 1322, 1332, 1342 (Figure 1.2-3)	$< 10^{6}$
Remote shutdown panel Rooms No 1313, 1323 (inside rooms 1311 and 1321) (Figure 1.2-3)	$< 10^{4(1)}$ $< 10^{6}$
Non-divisional electrical equipment Safety-related DCIS panels Rooms No 1500, 1501, 1502, 1503 (Figure 1.2-5)	$< 10^{4(1)}$ $< 10^{6}$
Div 1, 2, 3 and 4 electrical penetrations (EL.13570) Electrical cables and penetration Rooms No 1610, 1620, 1630, 1640 (Figure 1.2-6)	$< 10^{6}$

Table 3H-6

Typical Radiation Environmental Qualification Conditions Inside Reactor Building

Plant Zone/Typical Equipment	Integrated gamma dose (rads)
Div 1, 2, 3 and 4 corridors rooms (access to penetration area), divisional electrical cables and safety-related DCIS RMUs Rooms No 1710, 1720, 1730, 1740 (Figure 1.2-7)	$< 10^{4(1)}$ $< 10^{6}$
Div 1, 2, 3 and 4 electrical penetration (EL. 17500) and Mechanical penetrations Electrical cables and penetrations. Outboard isolation valves Rooms No 1711, 1721, 1731, 1741 and 1712, 1722, 1732, 1742 (Figure 1.2-7)	$< 10^{6}$
SLC tank rooms SLC tank instrumentation Rooms No 1713, 1723 (Figure 1.2-7)	$< 10^{4(1)}$ $< 10^{6}$
Main Steam Tunnel Main Steamline (MSL) isolation valves MSL drain isolation valves FW isolation valves Rooms No 1770 (Figure 1.2-7)	$< 10^{7}$
IC/PCCS pools ICS pools instrumentation Rooms No 18P3A/B/C/D, 18P4A/B/C/D/E/F, 18P5A/B/C, 18P6A/B/C (Figure 1.2-8)	$< 10^{4}$

(1) Electronic equipment is qualified for gamma dose $< 10^4$ rads, other equipment is qualified for gamma dose $< 10^6$ rads. In locations within these zones where the calculated dose is greater than 10^4 rads the qualification is done for the actual calculated doses plus 10%, or equipment is protected from radiation.

Table 3H-7

Typical Radiation Environmental Qualification Conditions Inside Control Building

Plant Zone/Typical Equipment	Integrated gamma dose (rads)
Safety-related portions of CRHA Ventilation Subsystem Rooms No 3406, 3407 (Figure 1.2-5)	$< 10^3$
Control Room Habitability Area Main control room panels (Figure 3H-1)	$< 10^3$
Div 1, 2, 3 and 4 electrical rooms Safety-related DCIS panels Rooms No 3110, 3120, 3130 and 3140 (Figure 1.2-2)	$< 10^3$

Table 3H-8

Thermodynamic Environment Conditions Inside Containment Vessel for Accident Conditions

Plant Zone			
(a-1 & a-2)	Upper and lower drywell [1] (Figure 6.2-1)	Time [2] Bulk Temp. °C (°F) Press. kPaG (psig) Humidity %	0 h – 72 h. 178 (352) Max. 310 (45) Max. Steam
(a-3)	Wetwell (Figure 6.2-1)	Time [2] Bulk Temp. °C (°F) Press. kPaG (psig) Humidity %	0 h – 72 h 135 (275) Max. 310 (45) Max. 100

Notes:

(1) For a pipe failure inside the containment vessel, water accumulates in the lower drywell. The amount depends upon the break location.

(2) Time denotes the time after the occurrence of LOCA.

Table 3H-9

Thermodynamic Environment Conditions Inside Reactor Building for Accident Conditions

Plant Zone/Typical Equipment[3]			
Hydraulic Control Unit (HCU) Rooms HCU, RPS solenoids and RPV water level instrument racks Rooms No 1110, 1120, 1130, 1140 (Figure 1.2-1)	Time[1] Temp. °C (°F) [2] Press. kPaG (psig) Humidity %	0 h - 72 h 50 (122) Max Not controlled Not controlled	96 h - 100 days 40 (104) Negative Pressure Not controlled
Battery Rooms Div 1, 2, 3 and 4 batteries Rooms No 1210, 1220, 1230, 1240 (Figure 1.2-2)	Time[1] Temp. °C (°F) [2] Press. kPaG (psig) Humidity %	0 h - 72 h 50 (122) Max Not controlled Not controlled	96 h - 100 days 40 (104) Positive Pressure Not controlled
Div 1, 2, 3 and 4 commodity chases Electrical cables Rooms No 1211, 1221, 1231, 1241 (Figure 1.2-2)	Time[1] Temp. °C (°F) [2] Press. kPaG (psig) Humidity %	0 h - 72 h 110 (230) Max Not controlled Not controlled	96 h - 100 days 50 (122) Positive Pressure Not controlled
Electrical Division Rooms Div 1, 2, 3 and 4 electrical and electronic equipment Rooms No 1311, 1321, 1331, 1341 (Figure 1.2-3)	Time[1] Temp. °C (°F) [2] Press. kPaG (psig) Humidity %	0 h - 72 h 50 (122) Max Not controlled Not controlled	96 h - 100 days 40 (104) Positive Pressure Not controlled
Lower drywell non-divisional electrical and mechanical penetration Outboard containment isolation valves Rooms No 1300, 1301, 1302, 1303 (Figure 1.2-3)	Time[1] Temp. °C (°F) [2] Press. kPaG (psig) Humidity %	0 h - 72 h 110 (230) Max Not controlled Not controlled	96 h - 100 days 50 (122) Positive Pressure Not controlled
Div 1, 2, 3 and 4 electrical penetration rooms Electrical cables and penetrations Rooms No 1312, 1322, 1332, 1342 (Figure 1.2-3)	Time[1] Temp. °C (°F) [2] Press. kPaG (psig) Humidity %	0 h - 72 h 110 (230) Max Not controlled Not controlled	96 h - 100 days 50 (122) Positive Pressure Not controlled
Remote shutdown panel Rooms No 1313, 1323 (inside rooms 1311 and 1321) (Figure 1.2-3)	Time[1] Temp. °C (°F) [2] Press. kPaG (psig) Humidity %	0 h - 72 h 50 (122) Not controlled Not controlled	96 h - 100 days 40 (104) Positive Pressure Not controlled
Non-divisional electrical equipment Safety-related DCIS panels Rooms No 1500, 1501, 1502, 1503 (Figure 1.2-5)	Time[1] Temp. °C (°F) [2] Press. kPaG (psig) Humidity %	0 h - 72 h 50 (122) Max Not controlled Not controlled	96 h - 100 days 40 (104) Positive Pressure Not controlled

Table 3H-9

Thermodynamic Environment Conditions Inside Reactor Building for Accident Conditions

Plant Zone/Typical Equipment[3]			
Div 1, 2, 3 and 4 electrical penetrations (EL.13570) Electrical cables and penetration Rooms No 1610, 1620, 1630, 1640 (Figure 1.2-6)	Time[1] Temp. °C (°F) [2] Press. kPaG (psig) Humidity %	0 h - 72 h 110 (230) Max Not controlled Not controlled	96 h - 100 days 50 (122) Positive Pressure Not controlled
Div 1, 2, 3 and 4 corridors rooms (access to penetration area), divisional electrical cables and safety-related DCIS RMUs Rooms No 1710, 1720, 1730, 1740 (Figure 1.2-7)	Time[1] Temp. °C (°F) [2] Press. kPaG (psig) Humidity %	0 h - 72 h 50 (122) Max Not controlled Not controlled	96 h - 100 days 40 (104) Negative Pressure Not controlled
Div 1, 2, 3 and 4 electrical penetration (EL. 17500) and Mechanical penetrations. Electrical cables and penetrations. Outboard isolation valves Rooms No 1711, 1721, 1731, 1741 and 1712, 1722, 1732, 1742 (Figure 1.2-7)	Time[1] Temp. °C (°F) [2] Press. kPaG (psig) Humidity %	0 h - 72 h 110 (230) Max Not controlled Not controlled	96 h - 100 days 50 (122) Negative Pressure Not controlled
SLC tank rooms SLC tank instrumentation Rooms No1713, 1723 (Figure 1.2-7)	Time[1] Temp. °C (°F) [2] Press. kPaG (psig) Humidity %	0 h - 72 h 50 (122) Max Not controlled Not controlled	96 h - 100 days 40 (104) Negative Pressure Not controlled
Main Steamline (MSL) isolation valves MSL drain isolation valves FW isolation valves Rooms No 1770 (Figure 1.2-7)	Time[1] Temp. °C (°F) [2] Press. kPaG (psig) Humidity %	0 h - 72 h 117 (234) Max 76 (11) 100	96 h - 100 days 60 (140) Negative Pressure Not controlled
IC/PCCS pools ICS pools instrumentation Rooms No 18P3A/B/C/D, 18P4A/B/C/D/E/F, 18P5A/B/C, 18P6A/B/C (Figure 1.2-8)	Time[1] Temp. °C (°F) [2] Press. kPaG (psig) Humidity %	0 h - 72 h 112 (234) Max 49 (7.1) 100	96 h - 100 days 100 (212) Positive Pressure 100

(1) Time indicates the time after the occurrence of the accident.

(2) After 72h, the temperature decreases to the temperature value shown for 96h.

(3) Electronic equipment is qualified for 50ºC (122ºF) during 72 hours; other equipment could be qualified for higher temperatures according to the above values. In locations within these zones where room temperature is higher than 50°C (122ºF), electronic equipment is qualified for the actual calculated temperature within the zone, or the equipment is protected from high temperatures.

Table 3H-10

Thermodynamic Environment Conditions Inside Control Building for Accident Conditions

Plant Zone/Typical Equipment			
Safety-related portions of CRHA Ventilation Subsystem Rooms No 3406, 3407 (Figure 1.2-5)	Time(1) Temp. °C (°F) Press. Pa (psi) Humidity	0 h - 72 h 50 (122)Max Not controlled Not controlled	10 days – 100 days 26 (79) Max Positive Pressure Not controlled
Electrical chases Rooms No 3250, 3261 (Figure 1.2)	Time (1) Temp. °C (°F) Press. Pa (psi) Humidity	0 h – 72 h 110 (230) Max Not controlled Not controlled	10 days – 100 days 26 (79) Max Positive Pressure Not controoled
Control Room Habitability Area Main control room panels (Figure 3H-1)	Time(1) Temp. °C (°F)(2) Press. Pa (psi) Humidity	0 – 72 h 8.3 (15) Max diff allowed 31 (4.5E-3) Not controlled	10 days 25.6 (78) max 31 (4.5E-3) 60% Max
Div 1, 2, 3 and 4 electrical roomsSafety-related DCIS panels Rooms No 3110, 3120, 3130 and 3140 (Figure 1.2-2)	Time(1) Temp. °C (°F) Press. Pa (psi) Humidity	0 h - 72 h 45 (113)Max Not controlled Not controlled	10 days – 100 days 26 (79) Max Positive Pressure Not controlled

(1) Time indicates the time after the occurrence of the accident.

(2) Maximum rise above normal operating temperature. After 72h, the temperature decreases to the temperature value shown for 10 days.

Table 3H-11

Radiation Environment Conditions Inside Containment Vessel for Accident Conditions

Plant Zone/Typical Equipment	Maximum Post-Accident Dose Rate(1)		Integrated Dose(3)	
	Gamma (R/h)	Beta (R/h)	Gamma (R)	Beta (R)
(b-1) Upper drywell (Figure 6.2-1)	2.64 E+7	2.64 E+8	2.64 E+8	2.64 E+9
(b-2) Upper area of lower drywell (Figure 6.2-1)	2.64 E+7	2.64 E+8	2.64 E+8	2.64 E+9
(b-3) Lower area of lower drywell (Figure 6.2-1)	2.64 E+7	2.64 E+8	2.64 E+8	2.64 E+9
(b-4) Wetwell - Suppression pool and gas space (Figure 6.2-1)	4.0 E+7	5.3 E+8	4.0 E+8	6.6 E+9

(1) The accident dose rates are based on ABWR plant accident conditions and adjusted for ESBWR using appropriate scaling factors.

(2) Note deleted.

(3) Integrated dose is for 6 months.

Table 3H-12

Room Heat Loads

Rooms	Contain safety-related equipment	Heat Load W (BTU/h)(1)			Remarks
		0 – 2 hr	2 – 24 hr	24 – 72 hr	
1110, 1120, 1130, 1140	Yes	2300 (7848)	2300 (7848)	2300 (7848)	
1100, 1101, 1102, 1103, 1150, 1151, 1152, 1160, 1161, 1162, 1195	No	1800 (6142) HELB	HELB	HELB	Heat load for LOCA with SBO scenario. Rooms bounded by HELB conditions, see Chapter 6
1106, 1107, 1196, 1197, 1198	No	Negligible	0	0	No heat load and no heat sink (conservative assumption)
1250, 1251, 1252, 1260, 1261, 1262, 1293, 1294, 1295, 1296	No	1800 (6142) HELB	HELB	HELB	Heat load for LOCA with SBO scenario. Rooms bounded by HELB conditions, see Chapter 6
1210, 1220, 1230, 1240	Yes	7200 (24567)	6000 (20473)	6000 (20473)	
1211, 1221, 1231, 1241	Yes	500 (1706)	500 (1706)	500 (1706)	
1203, 1204	No	Negligible	0	0	No heat load and no heat sink (conservative assumption)
1311, 1321, 1331, 1341	Yes	10140 (34599)	8140 (27774)	8140 (27774)	
1304, 1305, 1306, 1307, 1308	No	HELB	HELB	HELB	Rooms bounded by HELB conditions, see Chapter 6
1300, 1301, 1302, 1303	Yes	1700/500 (5800/1706)	1700/500 (5800/1706)	1700/500 (5800/1706)	The higher heat load applies to the rooms in which the RWCU/SDC piping is located.
1312, 1322, 1332, 1342	Yes	500 (1706)	500 (1706)	500 (1706)	
1313, 1323	Yes	500 (1706)	500 (1706)	500 (1706)	
1400, 1401, 1402, 1403	No	5500 (18767)	0	0	
1500, 1501, 1502, 1503	Yes	17500 (59712)	2000 (6824)	2000 (6824)	
1600	No	300 (1024)	0	0	
1610, 1620, 1630, 1640	Yes	500 (1706)	500 (1706)	500 (1706)	
1710, 1720, 1730, 1740	Yes	3450/2250 (11772/7677)	3450/2250 (11772/7677)	3450/2250 (11772/7677)	The higher heat load applies to the rooms in which the RWCU/SDC piping is located.
1711, 1721, 1731, 1741	Yes	500 (1706)	500 (1706)	500 (1706)	
1712, 1722, 1732, 1742	Yes	1200 (4095)	1200 (4095)	1200 (4095)	
1713, 1723	Yes	200 (682)	200 (682)	200 (682)	
1770	Yes	HELB	HELB	HELB	Room bounded by HELB conditions, see Chapter 6

Table 3H-12

Room Heat Loads

Rooms	Contain safety-related equipment	Heat Load W (BTU/h)(1)			Remarks
		0 – 2 hr	2 – 24 hr	24 – 72 hr	
18P3A/B/C/D, 18P4A/B/C/D/E/F, 18P5A/B/C, 18PA/B/C	Yes	HELB	HELB	HELB	Rooms bounded by HELB conditions, see Chapter 6
3110, 3120, 3130, 3140	Yes	5720 (19517)	4675 (15952)	3080 (10509)	
3100, 3101	No	0	0	0	No heat loads during a 0 - 72 hour period (heat sink)
CRHA (Figure 3H-1)	Yes	7630 (26035) (Note this does not include the nonsafety-related heat loads. There is a cooling system sized to remove the nonsafety-related heat loads for 2 hr. See Subsection 9.4.1)	7630 (26035)	7630 (26035)	200 l/s (424 cfm)of outside air are considered (see Table 9.4-1). It is assumed that the control room habitability area is well mixed. Heat load provided for overall CRHA.
(Deleted)					
3200,3203, 3277	No	0	0	0	No heat loads during a 0-72 hour period (heat sink)
3250, 3261	Yes	500 (1706)	500 (1706)	500 (1706)	
3251, 3260	No	0	0	0	No heat loads during a 0-72 hour period (heat sink)
3301, 3302	No	54000 (184256)	0	0	Louver for each room maintains a maximum temperature of 50°C (122°F) during LOOP. See Figures 1.2-4, 1.2-5 and 1.2-11.
3401, 3402, 3403, 3404 & corridors	No	0	0	0	No heat loads during a 0-72 hour period (heat sink)
3406, 3407	Yes	500 (1706)	500 (1706)	500 (1706)	

(1) Heat Loads provided per room except as noted.

Table 3H-13

Typical Mild Environment Parameter Limits

Parameter	Limits	Notes
Temperature	50°C (122°F) 63°C (145°F)	Normal Abnormal
Pressure	Atmospheric	Nominal
Humidity	30 – 65% ≤ 95%	Typical Abnormal
Radiation	≤ 1E4 Rads Gamma ≤ 1E3 Rads Gamma	 Electronics
Chemistry	None	
Submergence	None	

Table 3H-14

Input Parameters, Initial Conditions and Assumptions used in Reactor Building and Control Building Heat up Analyses

Parameter	Analytical Value	Design Value
Initial Ground Temperature °C (°F)(1)	30 (86)	15.5 (60)
HELB Temperatures	See Chapter 6 Analysis	See Chapter 6
LOCA Temperatures	See Chapter 6 Analysis	See Chapter 6
Heat Sink Initial Temperature(2)	Table 3H-15	Table 3H-15
CRHA Day and Night Temperature Profile Δ °C (°F)(3)	15 (27)	15 (27)
EFU Outside Air Supply into CRHA l/s (cfm)	200 (424)	200 (424)
Concrete Thermal Conductivity for RB and CB W/m°C (Btu·in/h·ft²·°F)(4)	0.865 (6.00)	1.63 (11.3)
Concrete Specific Heat J/kg·°C (Btu/lb°F)(4)	653.1 (0.156)	879.2 (0.210)
Concrete Density kg/m³ (lb/ft³)(4)	1922.2 (120.00)	2394.8 (149.50)
CRHA Heat Sink Perimeter m (ft)	103 (338)	103 (338)
CRHA Heat Sink Perimeter Wall Thickness in Contact with the Ground m (ft)	0.90 (2.95)	0.90 (2.95)
CRHA Heat Sink Perimeter Wall Thickness in Contact with the Corridor m (ft)	0.50 (1.64)	0.50 (1.64)
CRHA Heat Sink Thickness of Internal Walls and Walls not in contact with the Ground or Corridor m (ft)	0.30 (0.98)	0.30 (0.98)
CRHA Heat Sink Height m (ft)	6.15 (20.2)	6.15 (20.2)
CRHA Heat Sink Ceiling/Floor Area m² (ft²)	443 (4769)	443 (4769)
CRHA Heat Sink Ceiling/Floor Thickness m (ft)	0.50 (1.64)	0.50 (1.64)
CRHA Room Volume m³ (ft³)	2724 (96197)	2724 (96197)

(1) Heat transfer to the ground is not considered once the accident begins. During wintertime conditions the CB calculation uses 15.5°C (60°F) as the initial ground temperature. This temperature is used to set the initial temperature of the concrete heat sink.

(2) The initial temperature considered on surface structures is made equal on both faces and equal to the room temperature when the room temperature is the same on both sides of the wall, floor or ceiling. When rooms have no equal room temperatures on both sides in normal operation, a linear temperature distribution across the wall is used.

(3) During summertime conditions the maximum CB design temperature is used 47.2°C (117°F), during wintertime conditions the minimum CB design temperature is used – 40°C/°F.

(4) Combinations of thermal concrete properties were used for the RB calculation. The most limiting value is presented in the results.

Table 3H-15

Analytical Room Environmental Temperatures

Rooms	Temperature ºC (ºF)			
	Normal Operation (Analytical)(1)	72 hrs	168 hrs	Max Qualification Temperature
Hydraulic Control Unit (HCU) Rooms HCU, RPS solenoids and RPV water level instrument racks Room No 1110, 1120, 1130, 1140 Representative Room: 1130	30 (86)	44 (111)	Safe Shutdown	50 (122)
Battery Rooms Div 1, 2, 3 and 4 batteries Room No 1210, 1220, 1230, 1240 Representative Room: 1220	25 (77)	42 (108)	Safe Shutdown	50 (122)
Div 1, 2, 3 and 4 commodity chases Electrical cables Room No 1211, 1221, 1231, 1241 Representative Room: 1241	41 (106)	58 (136)	Safe Shutdown	110 (230)
Electrical Division Rooms Div 1, 2, 3 and 4 electrical and electronic equipment Room No 1311, 1321, 1331, 1341 Representative Room: 1341	30 (86)	47 (117)	Safe Shutdown	50 (122)
Lower drywell non-divisional electrical and mechanical penetration Outboard containment isolation valves Room No 1300, 1301, 1302, 1303 Representative Room: 1302	41 (106)	67 (153)	Safe Shutdown	110 (230)
Div 1, 2, 2 and 4 electrical penetration rooms Electrical cables and penetrations Room No 1312, 1322, 1332, 1342 Representative Room: 1312	41 (106)	59 (138)	Safe Shutdown	110 (230)
Remote shutdown panel Rooms No 1313, 1323 (inside rooms 1311 and 1321) Representative Room: 1323	30 (86)	45 (113)	Safe Shutdown	50 (122)
Non-divisional electrical equipment Safety-related DCIS panels Rooms No 1500, 1501, 1502, 1503 Representative Room: 1501	30 (86)	46 (115)	Safe Shutdown	50 (122)

Table 3H-15

Analytical Room Environmental Temperatures

Rooms	Temperature ºC (ºF)			
	Normal Operation (Analytical)(1)	72 hrs	168 hrs	Max Qualification Temperature
Div 1, 2, 3 and 4 electrical penetrations (EL.13570) Electrical cables and penetrations Rooms No 1610, 1620, 1630, 1640 Representative Room: 1610	41 (106)	59 (138)	Safe Shutdown	110 (230)
Div 1and 4 corridors rooms (access to penetration area), divisional electrical cables and safety-related DCIS RMUs Rooms No 1710, 1740 Representative Room: 1740	30 (86)	48 (118)	Safe Shutdown	50 (122)
Div 2 and 3 corridors rooms (access to penetration area), divisional electrical cables and safety-related DCIS RMUs Rooms No 1720, 1730 Representative Room: 1720	30 (86)	49 (120)	Safe Shutdown	50 (122)
Div 1, 2, 3 and 4 electrical penetrations (EL. 17500) Electrical cables and penetrations. Rooms No 1711, 1721, 1731, 1741 Representative Room: 1741	41 (106)	54 (129)	Safe Shutdown	110 (230)
Mechanical penetrations (EL. 17500) Outboard isolation valves Rooms No 1712, 1722, 1732, 1742 Representative Room: 1712	41 (106)	61 (142)	Safe Shutdown	110 (230)
SLC tank rooms SLC tank instrumentation Rooms No 1713, 1723 Representative Room: 1723	30 (86)	39 (102)	Safe Shutdown	50 (122)
Main Steam Tunnel Main Steamline (MSL) isolation valves MSL drain isolation valves FW isolation valves Rooms No 1770 Accident Conditions	43 (109)	Chapter 6 Analysis	Chapter 6 Analysis	117 (243)

Table 3H-15

Analytical Room Environmental Temperatures

Rooms	Temperature ºC (ºF)			
	Normal Operation (Analytical)(1)	72 hrs	168 hrs	Max Qualification Temperature
IC/PCCS pools ICS pools instrumentation Rooms No 18P3A/B/C/D, 18P4A/B/C/D/E/F, 18P5A/B/C, 18P6A/B/C Accident Conditions	43 (109)	Chapter 6 Analysis	Chapter 6 Analysis	112 (234)
Control Room Habitability Area Main control room panels Figure 3H-1 Summertime Conditions	25.56 (78)	33.3 (92)	34.4 (94)	8.33 (15.0) Max Increase for 72 hrs
Control Room Habitability Area Main control room panels Figure 3H-1 Wintertime Conditions	22.78 (73)(2)	16 (61)(3)	13 (55)	Unspecified
Div 1, 2, 3 and 4 electrical rooms Safety-related DCIS panels Rooms No 3110, 3120, 3130 and 3140	27 (81)(2)	39 (102)	Safe Shutdown	45 (113)
Safety-related portions of CRHA Ventilation Subsystem Rooms No 3406, 3407	40 (104)(2)	44 (112)	Safe Shutdown	50 (122)
Electrical Chases Room No 3250, 3261	27 (81)(2)	38 (114)	Safe Shutdown	110 (230)

(1) All rooms in the RB and CB are evaluated at higher than expected normal operating temperatures unless otherwise shown in the table to be at normal operating temperatures. The HVAC equipment rooms start at a temperature of 40°C (104°F) as stated in Subsection 9.4.1.

(2) During winter conditions the CB room initial temperatures, with the exception of the CRHA, are set to 18.3°C (65°F).

(3) The CRHA heat loads considered during this period is 2821 Watts (9626 BTU/h).

Figure 3H-1. Control Room Habitability Area

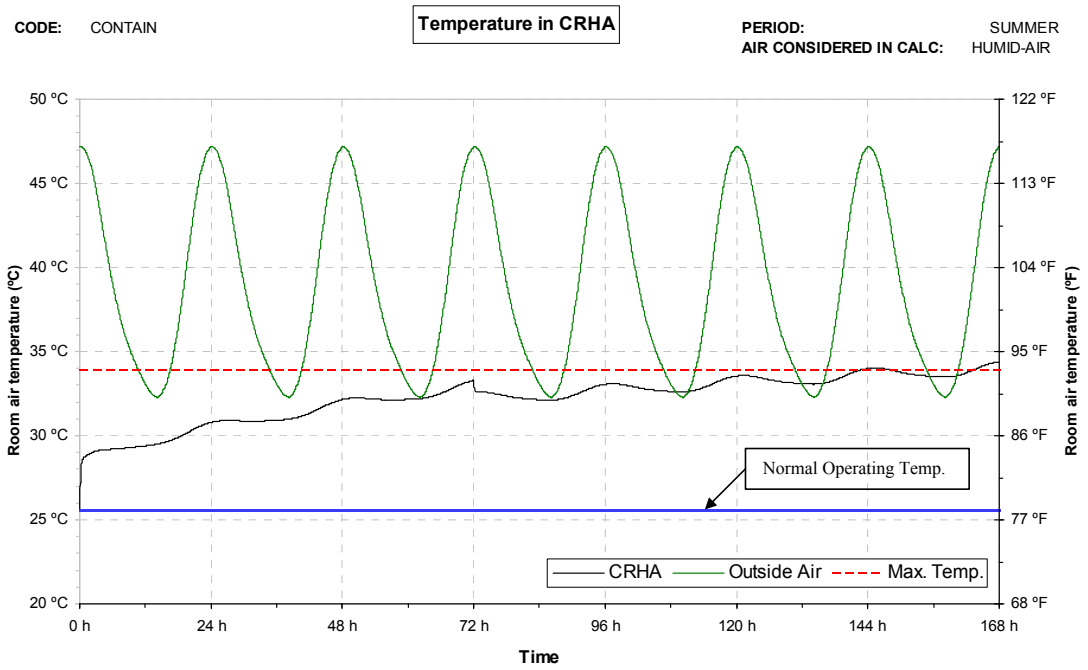

Figure 3H-2. Control Room Habitability Area Heat up – 0% Exceedance Maximum Temperature Case

3I. DESIGNATED NEDE-24326-1-P MATERIAL WHICH MAY NOT CHANGE WITHOUT PRIOR NRC APPROVAL

This appendix presents the necessary NEDE-24326-1-P (Reference 3I-1), "General Electric Environmental Qualification Program," material for *identifying the material, by italics, which shall not be changed without prior NRC approval*. (See Section 3.10.)

3I.1 GENERAL REQUIREMENTS FOR DYNAMIC TESTING

(Paragraph 4.4.2.5.1 of Ref. 3I-1)

(a) ***Mounting*** *– Specimens to be tested will be mounted in a manner that adequately simulates the installed configuration or as described in the applicable GE mounting documentation.* Mounting will be specified in the Product Performance Qualification Specification (PPQS).

(b) ***Monitoring*** *– Sufficient monitoring equipment will be used to evaluate the performance of the specimen before, during, and after the test. Monitoring product is used to allow determination of applied vibration levels and equipment responses. The location of monitoring sensors* shall be specified by the PPQS and *will be documented in the test report.*

When required by the PPQS*, the response of the product will be measured using accelerometers. When required* by the PPQS*, the accelerometers shall be located at a sufficient number of locations on the product to define the mode shapes and/or frequencies which would be required to allow dynamic qualification of individual safety-related components and devices, to support analytical extrapolation of test results, or to verify frequency requirements.*

(c) ***Exploratory Tests*** *– Exploratory vibration tests may be performed on the product to aid in the determination of the test method that will best qualify or determine the dynamic characteristics of the product. If it can be shown that the equipment is not resonant at any frequency within the expected frequency range, it may be considered a rigid body and tested according to methods and procedures discussed in Subsection 4.4.2.5.6 of Reference 3I-1 or analyzed according to the methods of Subsection 4.4.4.1.4.5 of Reference 3I-1.*

If the product contains a single resonance or multiple resonances, one of the methods outlined in Subsection 4.4.2.5.3 of Reference 3I-1 will be used to qualify the product by test.

The exploratory test may be performed in the form of a low-level, continuous sinusoidal sweep at a rate no greater than 2 octave per minute over the frequency range equal to or greater than that to which the equipment is to be qualified. All resonances will be recorded for use in determining the test method to be used or the dynamic characteristics of the equipment. If the configuration of the product is such that critical natural frequencies cannot be ascertained, dynamic qualification will be accomplished by testing by the Response Spectrum method as specified in Paragraph 4.4.2.5.3.6 of Reference 3I-1. An acceptable alternative qualification method is a fragility test as described in Subsection 4.4.2.5.7 of Reference 3I-1.

(d) ***Dynamic Event Aging Tests*** *– The dynamic tests simulate the effect of low level earthquake loads combined with Service Level B RBV dynamic loads. The dynamic tests are performed on aged products unless otherwise justified.* (See Section 3.10)

The test sequence to be used will be:

(1) Vibration aging (if required);

(2) Low level earthquake loads combined with Service level B RBV dynamic loads; and

(3) SSE loads combined with Service level D RBV dynamic loads

Because most testing is biaxial rather than triaxial, the above sequence and durations are applied twice with the equipment being rotated 90 degrees on the table between the two tests. (See Section 3.10)

The Test Response Spectra (TRS) will envelop the RRS as specified in 4.2.2.a(6) of Reference 3I-1. (See Section 3.10)

(e) ***Loading*** *– Dynamic tests will be performed with the product subjected to nominal operating service conditions. If significant, normal operating loads such as electrical, mechanical, pressure, and thermal will be included. Where normal operating loads cannot be included in the dynamic tests, supplemental analysis will be used to qualify the product for those effects*. (See Section 3.10)

3I.2 PRODUCT AND ASSEMBLY TESTING

(Paragraph 4.4.2.5.2 of Ref. 3I-1)

(a) *Products will be tested simulating nominal operating conditions. In addition, dynamic coupling between interacting equipment will be considered*. See Section 3.10. The product shall be mounted on the shaker table as stated in Paragraph 4.4.2.5.1(a) of Reference 3I-1. If the product is intended to be mounted on a panel, the panel will be included in the test mounting.

Alternatively, the response at the product mounting location may be measured in the assembly test as specified in Paragraph 4.4.2.5.1(a) of Reference 3I-1. Then the product will be mounted directly to the shaker table, with the dynamic input being that which was determined at the product mounting location.

3I.3 MULTIPLE-FREQUENCY TESTS

(Paragraph 4.4.2.5.3 of Ref. 3I-1)

(a) ***General*** *– When the dynamic ground motion has not been strongly filtered, the mounting location retains the broadband characteristics. In this case, multi-frequency testing is applicable to dynamic qualification.* (See Section 3.10)

(b) **Response Spectrum Test** – Testing shall be performed by applying artificially generated input excitation to the product, the amplitude of which is controlled in 1/3 octave or narrower bands. *The excitation will be controlled to provide a test response spectrum (TRS) which meets or exceeds the required response spectrum (RRS). The peak value of the input excitation equals or exceeds the zero period acceleration (ZPA) of the RRS*. (See Section 3.10)

3I.4 SINGLE- AND MULTI-AXIS TESTS

(Paragraph 4.4.2.5.4 of Ref. 3I-1)

Single-axis tests may be allowed if the tests are designed to conservatively reflect the dynamic event at the equipment mounting locations or if the product being tested can be shown to respond independently in each of the three orthogonal axis or otherwise withstand the dynamic event at its mounting location.

If the preceding considerations do not apply, multi-axis testing will be used. The minimum is biaxial testing with simultaneous inputs in a principal horizontal axis and the vertical axis. Independent random inputs are preferred, and, if used, the test will be performed in two steps with the equipment rotated 90° in the horizontal plane for the second step. If independent random inputs are not used (such as with single frequency tests), four tests would be run; first, with the inputs in phase; second, with one input 180° out of phase; third, with the equipment rotated 90° horizontally and the inputs in phase; and, finally, with the same equipment orientation as in the third step but with one input 180° out of phase. (See Section 3.10)

3I.5 SINGLE FREQUENCY TESTS

(Paragraph 4.4.2.5.6 of Ref. 3I-1)

If it can be shown that the products, as defined in Regulatory Guide 1.92 have no resonances, or only one resonance, or if resonances are widely spaced and do not interact to reduce the fragility level in the frequency range of interest or, if otherwise justified, single frequency tests may be used to fully test the product. (See Section 3.10)

3I.6 DAMPING

(Paragraph 4.4.2.5.7 of Ref. 3I-1)

The product damping value used for dynamic qualification shall be established. See (Reference 3I-1) Section 5 of IEEE-344. (Also see Subsections 3.9.2.2, 3.9.3, and Section 3.10)

3I.7 QUALIFICATION DETERMINATION

(Paragraph 4.4.3.3 of Ref. 3I-1)

In order for equipment to be qualified by reason of operating experience, documented data will be available confirming that the following criteria have been met:

(a) the product providing the operating experience is identical or justifiably similar to the equipment to be qualified;

(b) the product providing the operating experience has operated under service conditions which equal or exceed, in severity, the service conditions and performance requirements for which the product is to be qualified; and

(c) the installed product must, in general, be removed from service and subjected to partial type testing to include the dynamic and design basis event environments for which the product is to be qualified. (See Section 3.10)

3I.8 DYNAMIC QUALIFICATION BY ANALYSIS

(Paragraph 4.4.4.1.4 of Ref. 3I-1)

(a) The analytical procedures described in this section may be used for dynamic qualification of products.

(b) Many factors control the design of a qualification program. Paragraphs 4.2.2.c(3) and 4.2.2.d(1) of Reference 3I-1 provide general guidelines on dynamic analysis techniques. Analytical techniques and modeling assumptions will, when possible, be based on a correlation of the analytical approach with testing or operating experience performed on similar equipment or structures. *Analysis may be used as a qualification method for the following conditions:*

(1) *if maintaining structural integrity is the only required assurance of the safety-related function* (see Section 3.10);

(2) if the response of the equipment is linear or has a simple nonlinear behavior which can be predicted by conservative analytical methods; or

(3) if the product is too large to test.

3I.9 REQUIRED RESPONSE SPECTRA

(Paragraph 4.4.4.1.4.6.2 of Ref. 3I-1)

(a) *The required response spectra that define the dynamic criteria for the location(s) of the product under consideration are to be given in the PPQS. If the equipment under consideration is attached to the structural system at more than one location, then the dynamic analysis performed takes into consideration the different response spectra at the different support locations. The effect of multiple support attachment points or multiple locations of the particular product can also be accounted for by selecting a single spectrum which will effectively produce the critical maximum responses due to different accelerations existing at different points.* (See Section 3.10.) This may be conservatively accomplished by enveloping the response spectra for the different applicable locations. Alternatively, actual multi-support excitation effects may be taken into account by performing a multi-support excitation analysis.

3I.10 TIME HISTORY ANALYSIS

(Paragraph 4.4.4.1.4.6.3 of Ref. 3I-1)

Time history analysis will be performed when conditions arise invalidating the response spectrum method of analysis due to nonlinear phenomena, or when generation of in-equipment response spectra or a more exact result is desired. To integrate or differentiate, the analysis will be done by an applicable numerical integration technique. The largest time step used in the analysis will be 1/10 of the period of the highest significant mode of vibration of the equipment. *The dynamic input will be the time history motion at the equipment support location.* (See Section 3.10.) For products supported at several locations, the responses will be determined by simultaneous excitations using appropriate time history input at each support location. The scaled time interval will be varied as per Paragraph 4.4.2.a(6) of Reference 3I-1.

If the product frequency is within the range of the supporting structure, then a time interval will be chosen such that the peak of the response spectrum shall be at the product resonance frequency. The total time interval range will be provided with the time history.

3I.11 REFERENCES

3I-1 GE Nuclear Energy, "General Electric Environmental Qualification Program," NEDE-24326-1-P, Proprietary Document, January 1983.

3J. EVALUATION OF POSTULATED RUPTURES IN HIGH ENERGY PIPES

3J.1 BACKGROUND AND SCOPE

The need for an evaluation of the dynamic effects of fluid dynamic forces resulting from postulated ruptures in high energy piping systems is established by Standard Review Plan (SRP) Sections 3.6.1 and 3.6.2. The criteria for performing this evaluation are defined in Subsections 3.6.1 and 3.6.2, SRP Sections 3.6.1 and 3.6.2 and ANS 58.2.

This Appendix defines an acceptable procedure for performing these evaluations.

The evaluation is performed in four major steps:

(1) Identify the location of the postulated rupture and whether the rupture is postulated as circumferential or longitudinal.

(2) Select the type and location of the pipe whip restraints.

(3) Perform a complete system dynamic analysis or a simplified dynamic analysis, as appropriate, of the ruptured pipe and its pipe whip restraints to determine the total movement of the ruptured pipe, the loads on the pipe, strains in the pipe whip restraint, and, if applicable, the stresses in the piping in the penetration area.

(4) Evaluate safety-related equipment that may be impacted by the ruptured pipe or the target of the pipe rupture jet impingement.

The criteria for locations where pipe ruptures must be postulated and the criteria for defining the configuration of the pipe rupture are defined in Subsection 3.6.2. Also defined in Subsection 3.6.2 are:

- the fluid forces acting at the rupture location and in the various segments of the ruptured pipe, and
- the jet impingement effects including jet shape and direction and jet impingement load.

The high energy fluid systems are defined within Subsection 3.6.2.1, and identified in Tables 3.6-3 and 3.6-4. Safety-related systems, components and equipment, or portions thereof, specified in Tables 3.6-1 and 3.6-2, are protected from pipe break effects that would impair their ability to facilitate safe shutdown of the plant.

The information contained in Subsections 3.6.1 and 3.6.2 and in the SRPs and ANS 58.2 is not repeated in this appendix.

3J.2 IDENTIFICATION OF RUPTURE LOCATIONS AND RUPTURE GEOMETRY

3J.2.1 Ruptures in Containment Penetration Area.

Postulation of pipe ruptures in the portion of piping in the containment penetration area is not allowed. This includes the piping between the inner and outer isolation valves. Therefore, the final stress analysis of the piping system is examined to confirm that, for piping in the containment penetration areas, the design stress and fatigue limits specified in Subsection 3.6.2.1 are not exceeded.

3J.2.2 Ruptures in Areas other than Containment Penetration.

Breaks in Class 1 piping are postulated in accordance with Subsection 3.6.2.1.1.

Breaks in Class 2 and 3 piping are postulated in accordance with Subsection 3.6.2.1.1.

Breaks in seismically analyzed non-ASME Class piping are postulated in accordance with the above requirements for Class 2 and 3 piping.

3J.2.3 Determination of the Type of Pipe Break

Determination of whether the high energy line break is longitudinal or circumferential is in accordance with Subsection 3.6.2.1.3.

3J.3 DESIGN AND SELECTION OF PIPE WHIP RESTRAINTS

3J.3.1 Preliminary Selection of Pipe Whip Restraint

The load carrying capability of the GE U-Bar pipe whip restraint is determined by the number, size, bend radius and the straight length of the U-bars. The pipe whip restraint must resist the thrust force at the pipe rupture location and the impact force of the pipe. The magnitude of these forces is a function of the pipe size, fluid temperature, and operating pressure.

A preliminary selection of one of the standard GE pipe whip restraints is made by matching the thrust force at the rupture location with a pipe whip restraint capable of resisting this thrust force. The GE REDEP computer file contains a set of tables for selecting the design of pipe whip restraint components. This file correlates the pipe size and the resulting thrust force at the pipe rupture with the U-bar pipe whip restraints designed to carry the thrust force. REDEP then supplies the force/deflection data for each pipe whip restraint.

3J.3.2 Preparation of Simplified Computer Model of Piping-Pipe Whip Restraint System.

A simplified computer model of the piping system is prepared as described in Subsection 3J.4.2.1 and as shown in Figure 3J-1 and Figure 3J-2. Critical variables are the length of pipe, type of end condition, distance of pipe from structure and location of the pipe whip restraint. The pipe whip restraint is located as near as practical to the ruptured end of the pipe, but so as to minimize interference to in-service inspection.

3J.3.3 Piping Dynamic Analysis

The Pipe Dynamic Analysis (PDA) computer program is run using the following input:

- The information from the simplified piping model, including pipe length, diameter, wall thickness and pipe whip restraint location.
- Piping information such as pipe material type, stress/strain curve and pipe material mechanical properties.
- Pipe whip restraint properties such as force-deflection data and elastic plastic displacements.
- Force time-history of the thrust at the pipe rupture location.

3J.3.4 Selection of Pipe Whip Restraint for Pipe Whip Restraint Analysis

PDA provides displacements of pipe and pipe whip restraint, pipe whip U-bar strains, pipe forces and moments at fixed end, time at peak load and lapsed time to achieve steady state using thrust load and pipe characteristics.

The displacements at the pipe broken end and at the pipe whip restraint are checked and the loads on the piping and the strains of pipe whip restraint U-bars are compared to allowable loads and strains. If the output results are not satisfactory, PDA is rerun with different pipe whip restraint parameters.

3J.4 PIPE RUPTURE EVALUATION

3J.4.1 General Approach

There are several analytical approaches, that may be used in analyzing the pipe/pipe whip restraint system for the effects of pipe rupture. This procedure defines two acceptable approaches.

(1) **Dynamic Time-History Analysis With Simplified Model** - A dynamic time history analysis of a portion of a piping system may be performed in lieu of a complete system analysis when it can be shown to be conservative by test data or by comparison with a more complete system analysis. For example, in those cases where pipe stresses in the containment penetration region need not be calculated, it is acceptable to model only a portion of the piping system as a simple cantilever with a fixed or pinned end or as a beam with both ends fixed or with one end pinned and one end fixed.

When a circumferential break is postulated, the pipe system is modeled as a simple cantilever, the thrust load is applied opposite the fixed (or pinned) end and the pipe whip restraint acts between the fixed (or pinned) end and the thrust load. It is then assumed that deflection of the pipe is in one plane. As the pipe moves a resisting bending moment in the pipe is created and later a restraining force at the pipe whip restraint. Pipe movement stops when the resisting moments about the fixed (or pinned) end exceed the applied thrust moment.

When a longitudinal break is postulated, the pipe system has both ends supported. To analyze this case, two simplifications are made to allow the use of the cantilever model described above. First, an equivalent point mass is assumed to exist at D (Figure 3J-2) instead of pipe length DE. The inertia characteristics of this mass, as it rotates about point B, are calculated to be identical to those of pipe length DE, as it rotates about point E. Second, an equivalent resisting force is calculated (from the bending moment-angular deflection relationships for end DE) for any deflection for the case of a built-in end. This equivalent force is subtracted from the applied thrust force when calculating the net energy.

See Figure 3J-1 and Figure 3J-2 for the models described above.

(2) **Dynamic Time-History Analysis with Detailed Piping Model**—In many cases it is necessary to calculate stresses in the ruptured pipe at locations remote from the pipe whip restraint location. For example, the pipe in the containment penetration area must meet the limits of SRP 3.6.2. In these cases it is required that the ruptured piping, the pipe supports, and the pipe whip restraints be modeled in sufficient detail to reflect their dynamic

characteristics. A time-history analysis using the fluid forcing functions at the point of rupture and the fluid forcing functions of each pipe segment is performed to determine deflections, strains, loads to structure and equipment and pipe stresses.

3J.4.2 Procedure For Dynamic Time-History Analysis With Simplified Model

3J.4.2.1 Modeling of Piping System

For many piping systems, required information on the response to a postulated pipe rupture can be determined by modeling a portion of the piping system as a cantilever with either a fixed or pinned end. The fixed end model, as shown in Figure 3J-1, is used for piping systems where the stiffness of the piping segment located between A and B is such that the slope of the pipe length, BD, at B, would be approximately zero. The pinned end model, as shown in Figure 3J-1, is used for piping systems where the slope of the pipe length, BD, at B, is much greater than zero. The pinned end model is also used whenever it is not clear that the pipe end is fixed.

A simplified cantilever model may also be used for a postulated longitudinal break in a pipe supported at both ends, as shown in Figure 3J-2. The pipe can have both ends fixed or have pinned end at B and a fixed end at E, as shown in Figure 3J-2. Subsection 3J.4.1(1) discusses the simplification techniques used to allow the use of a cantilever model. A fixed end is used when rotational stiffness of the piping at that location is such that the slope of the pipe at that end is approximately zero. A pinned end is used when the pipe slope at that end is much greater than zero. If it is not clear whether an end is fixed or pinned, the end condition giving more conservative results should be assumed.

The pipe whip restraint is modeled as two components acting in series; the restraint itself and the structure to which the restraint is attached. The restraint and piping behave as determined by an experimentally or analytically determined force-deflection relationship. The structure deflects as a simple linear spring of representative spring constant.

The model must account for the maximum clearance between the restraint and the piping. The clearance is equal to the maximum distance from the pipe during normal operation to the position of the pipe when the pipe whip restraint starts picking up the rupture load. This simplified model is not used if the piping has snubbers or restraints strong enough to affect the pipe movement following a postulated rupture.

3J.4.2.2 Dynamic Analysis of Simplified Piping Model

When the thrust force (as defined in Subsection 3.6.2.2) is applied at the end of the pipe, rotational acceleration would occur about the fixed (or pinned) end. As the pipe moves, the net rotational acceleration would be reduced by the resisting bending moment at the fixed end and by the application of the restraining force at the pipe whip restraint. The kinetic energy would be absorbed by the deflection of the restraint and the bending of the pipe. Movement would continue until equilibrium is reached. The primary acceptance criteria is the pipe whip restraint deflection or strain must not exceed the design strain limit of 50% of the restraint material ultimate uniform strain capacity.

The analysis may be performed by a general purpose computer program with capability for nonlinear time-history analysis such as ANSYS, or by a special purpose computer program

especially written for pipe rupture analysis such as the GE computer program, "Pipe Dynamic Analysis".

3J.4.3 Procedure For Dynamic Time-History Analysis Using Detailed Piping Model

3J.4.3.1 Modeling of Piping System

In general, the rules for modeling the ruptured piping system are the same as the modeling rules followed when performing seismic/dynamic analysis of Seismic Category I piping. These rules are outlined in Subsection 3.7.3.3. The piping, pipe supports and pipe whip restraints are modeled in sufficient detail to reflect their dynamic characteristics. Inertia and stiffness effects of the system and gaps between piping and the restraints must be included.

If the snubbers or other seismic restraints are included in the piping model they should be modeled with the same stiffness used in the seismic analysis of the pipe. However, credit for seismic restraints cannot be taken if the applied load exceeds the Level D rating.

The pipe whip restraints are modeled the same as for the simplified model described in Subsection 3J.4.2.1. For piping designed with the GE U-Bar pipe whip restraints, the selected size and dimensions, and the resulting force-deflection and elastic/plastic stiffness is first determined according to the procedure previously defined in Section 3J.3.

3J.4.3.2 Dynamic Analysis using Detail Piping Model

The pipe break nonlinear time-history analysis can be performed by ANSYS or other NRC approved non-linear computer programs. The force time histories acting at the break location and in each of the segments of the ruptured pipe are determined according to the criteria defined in ANS 58.2. The time step used in the analysis must be sufficiently short to obtain convergence of the solution. (GE has shown that for a rupture of the main steam pipe a time step of 0.001 second is adequate for convergence.) The analysis must not stop until the peaks of the dynamic load and the pipe response are over.

The primary acceptance criteria are:

- The piping stresses between the primary containment isolation valves are within the allowable limits specified in Subsection 3.6.2.1.
- The pipe whip restraint loads and displacements due to the postulated break are within the design limits.
- Specified allowable loads on safety-related valves or equipment to which the ruptured piping is attached are not exceeded.

3J.5 JET IMPINGEMENT ON SAFETY-RELATED PIPING

Postulated pipe ruptures result in a jet of fluid emanating from the rupture point. Safety-related systems and components require protection if they are not designed to withstand the results of the impingement of this jet. Subsection 3.6.2.3.1 provides the criteria and procedure for:

(1) defining the jet shape and direction;

(2) defining the jet impingement load, temperature and impingement location; and

(3) analysis to determine effects of jet impingement on safety-related equipment.

The paragraphs below provide some additional criteria and procedure for the analysis required to determine the effects of jet impingement on piping.

- Jet impingement is a faulted load and the primary stresses it produces in the piping must be combined with the stresses caused by safe shutdown earthquake (SSE) to meet the faulted stress limits for the designated ASME class of piping.
- If a pipe is subjected to more than one jet impingement load, each jet impingement load is applied independently to the piping system and the load which supplies the largest bending moment at each node is used for evaluation.
- A jet impingement load may be characterized as a two part load applied to the piping system—a dynamic portion when the applied force varies with time and a static portion which is considered steady state.

For the dynamic load portion, when static analysis methods are used, a dynamic load factor of 2 is applied. Snubbers are assumed to be activated. Stresses produced by the dynamic load portion are combined by SRSS with primary stresses produced by SSE.

For the static load portion, snubbers are not activated and stresses are combined with SSE stresses by absolute sum.

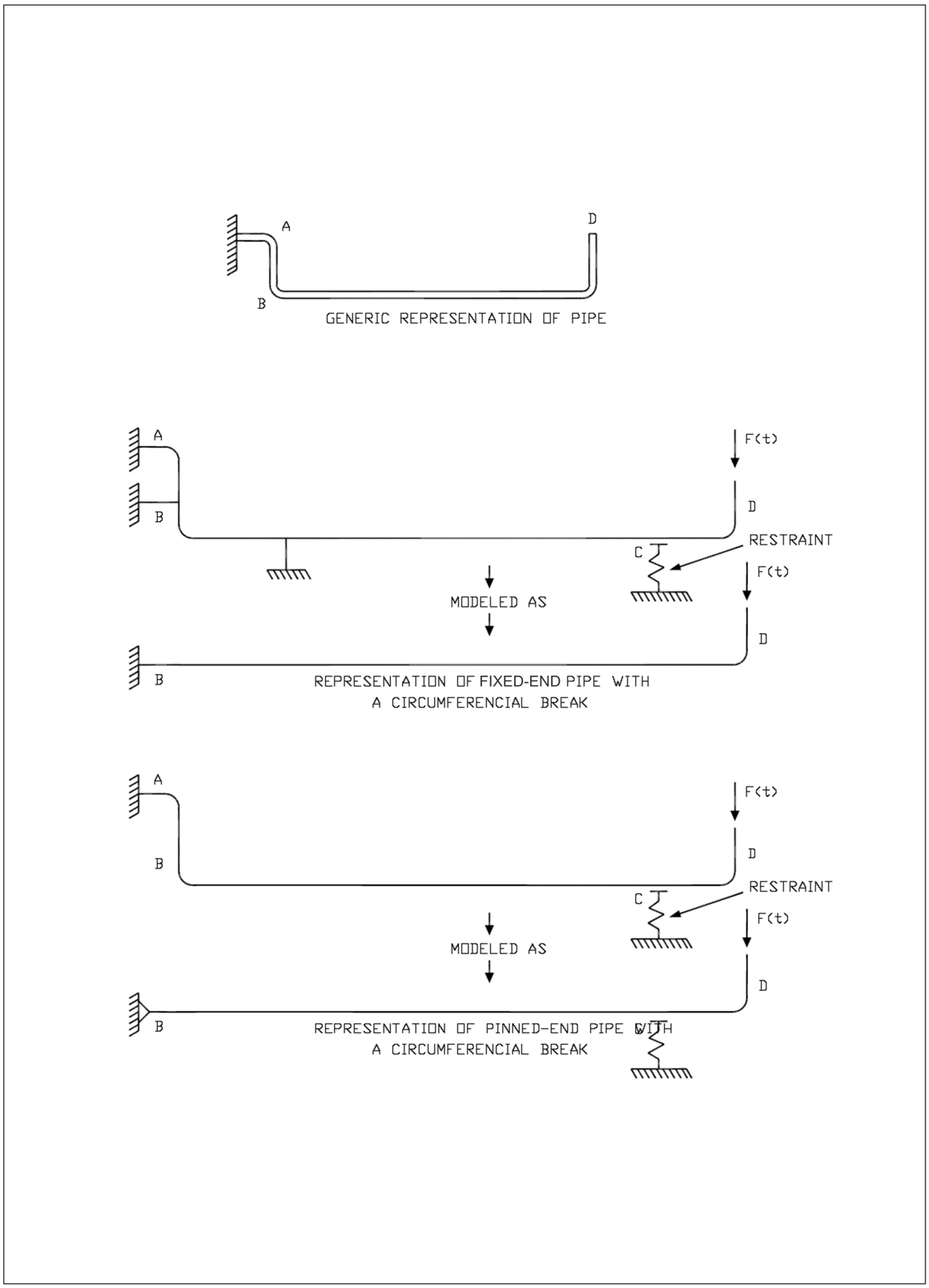

Figure 3J-1. Simplified Piping Models

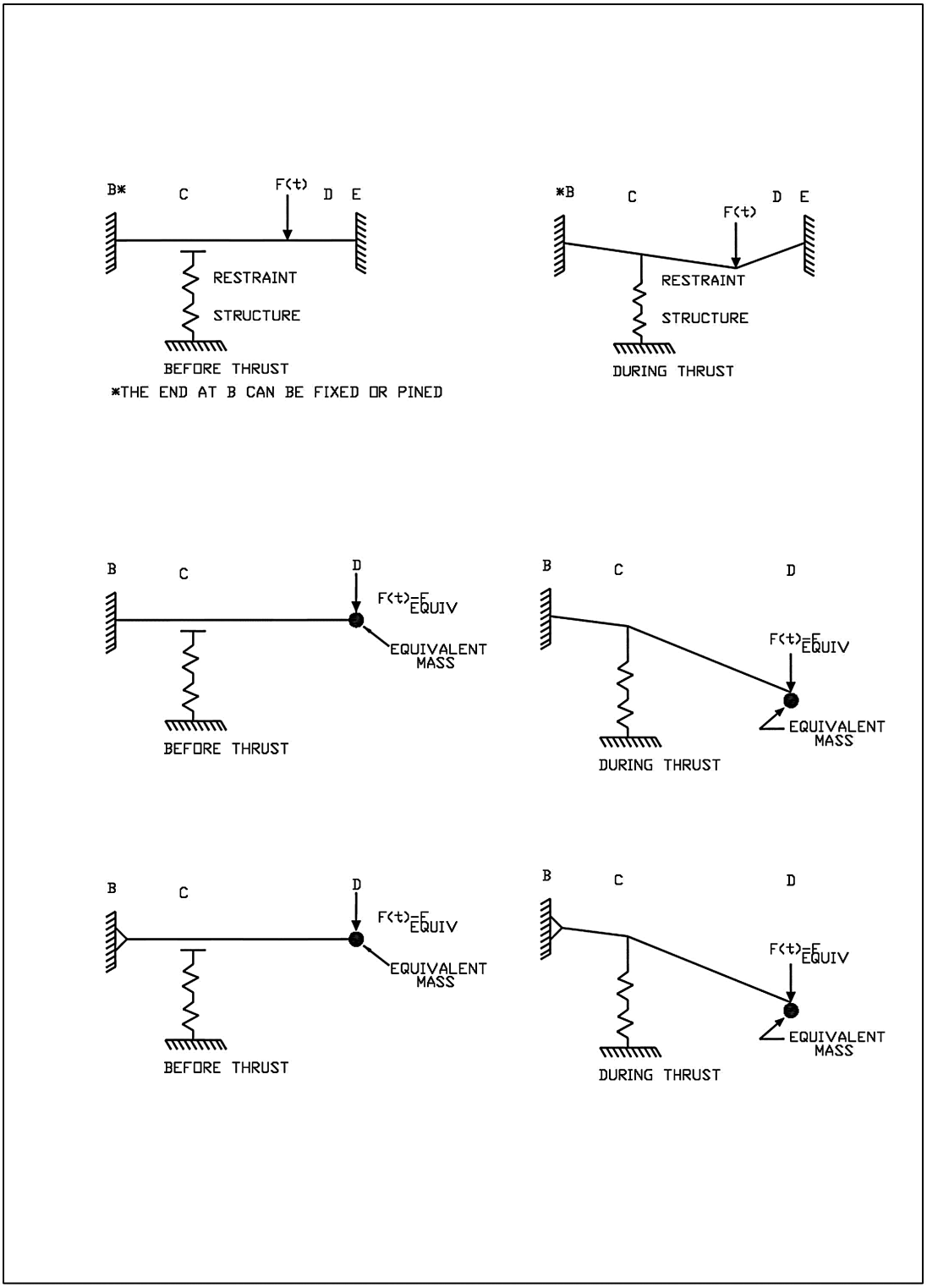

Figure 3J-2. Representation of Pipe With Both Ends Supported With a Longitudinal Break

3K. RESOLUTION OF INTERSYSTEM LOSS-OF-COOLANT-ACCIDENT

3K.1 INTRODUCTION

An Intersystem Loss-of-Coolant-Accident (ISLOCA) is postulated to occur when a series of failures or inadvertent actions occur that allow the high pressure from one system to be applied to the low design pressure of another system, which could potentially rupture the pipe and release coolant from the reactor system pressure boundary. This may also occur within the high and low pressure portions of a single system. Future advanced light water reactor (ALWR) designs like the ESBWR are expected to reduce the possibility of a loss-of-coolant-accident (LOCA) outside the containment by designing to the extent practicable all piping systems, major system components (pumps and valves), and subsystems connected to the reactor coolant pressure boundary (RCPB) to an ultimate rupture strength (URS) at least equal to the full RCPB pressure. The general URS criteria was recommended by the Reference 1 and the NRC Staff recommended specific URS design characteristics by Reference 2.

3K.2 REGULATORY POSITIONS

In SECY-90-016 and SECY-93-087 (References 3 and 4), the NRC staff resolved the ISLOCA issue for ALWR plants by requiring that low-pressure piping systems that interface with the RCPB be designed to withstand reactor pressure to the extent practicable. However, the staff believes that for those systems that have not been designed to withstand full reactor pressure, evolutionary ALWRs should provide (1) the capability for leak testing the pressure isolation valves, (2) valve position indication that is available in the control room when isolation valve operators are de-energized and (3) high-pressure alarms to warn main control room operators when rising reactor pressure approaches the design pressure of attached low-pressure systems or when both isolation valves are not closed. The staff noted that for some low-pressure systems attached to the RCPB, it may not be practical or necessary to provide a higher system ultimate pressure capability for the entire low-pressure connected system. The staff will evaluate such exceptions on a case-by-case basis during specific design certification reviews.

GE provided a proposed implementation of the issue resolution for the Advanced Boiling Water Reactor (ABWR) in Reference 5 and again in Reference 6. The staff in the Civil Engineering and Geosciences Branch of the Division of Engineering completed its evaluation of the Reference 5 proposal. Specifically, as reported by Reference 2 and summarized below, the staff has evaluated the minimum pressure for which low-pressure systems should be designed to ensure reasonable protection against burst failure should the low-pressure system be subjected to full RCPB pressure.

The design pressure for the low-pressure piping systems that interface with the RCPB should be equal to 0.4 times the normal operating RCPB pressure, the minimum wall thickness of low-pressure piping should be no less than that of a standard weight pipe, and that Class 300 valves are adequate. The design is to be in accordance with the ASME Boiler and Pressure Vessel Code, Section III, Subarticle NC/ND-3600. Furthermore, the staff will continue to require periodic surveillance and leak rate testing of the pressure isolation valves via Technical Specifications, as a part of the in-service inspection program.

The periodic surveillance and leak rate testing requirements for high-pressure to low-pressure isolation valves are not applicable to the ESBWR, because, as shown in this appendix, the ESBWR design does not contain a pressure isolation valve between the RCPB and a low pressure piping system.

3K.3 BOUNDARY LIMITS OF ULTIMATE RUPTURE STRENGTH

Guidance given by Reference 3 provides provision for applying practical considerations for the extent to which systems are upgraded to the URS design pressure. The following items form the basis of what constitutes practicality and set forth the test of practicality used to establish the boundary limits of URS for the ESBWR:

- It is impractical to consider a disruptive open flow path from reactor pressure to a low pressure sink. A key assumption to understanding the establishment of the boundary limits from this practicality basis is that only static pressure conditions are considered. Static conditions are assumed when the valve adjacent to a low pressure sink remains closed. Thus, the dynamic pressurization effects accompanied by violent high flow transients and temperature escalations which would occur if the full RCPB pressure was connected directly to the low pressure sink, are precluded. As a consequence, the furthest downstream valve in such a path is assumed closed, so that essentially all of the static reactor coolant system pressure is contained by the piping in the URS upgraded region.
- It is impractical to design or construct large tank structures to the URS design pressure that are vented to atmosphere and have a low design pressure.
- It is impractical to design piping systems that are connected to low pressure sink features to the URS design pressure when the piping is always locked open to a low pressure sink by locked open valves. These piping sections are extensions of the low pressure sink and need no greater design pressure than the low pressure sink to which they are connected.

3K.4 EVALUATION PROCEDURE

The pressures of each system piping boundary on the ESBWR system drawings were reviewed to identify where changes were needed to provide URS protection. Where low pressure piping interfaces with higher pressure piping connected to piping with reactor coolant at reactor pressure, design pressure values are at least rated to the URS design pressure. The low pressure piping boundaries were upgraded to URS pressures and extend to the last closed valve connected to piping interfacing a low pressure sink.

3K.5 SYSTEMS EVALUATED

The following systems, interfacing directly with the RCPB, were evaluated.

- Control Rod Drive system — Section 4.6
- Standby Liquid Control (SLC) system — Section 9.3
- Reactor Water Cleanup/Shutdown Cooling (RWCU/SDC) system — Section 5.4
- Fuel and Auxiliary Pools Cooling System (FAPCS) — Section 9.1
- Nuclear Boiler System (NBS) — Section 5.1

- Condensate and Feedwater System (C&FS) Section 10.4

Attachment 3KA contains a system-by-system evaluation of potential reactor pressure application to piping and components, discussing the URS boundary and listing the upgraded components. For some systems, certain regions of piping and components not upgraded are also listed.

3K.6 PIPING DESIGN PRESSURE FOR ULTIMATE RUPTURE STRENGTH COMPLIANCE

Guidelines for URS compliance were established by Reference 2, which concluded that for the ESBWR:

- The design pressure for the low-pressure piping systems that interface with the RCPB pressure boundary should be equal to 0.4 times the normal operating RCPB pressure, and
- The minimum wall thickness of the low-pressure piping should be no less than that of a standard weight pipe.

3K.7 APPLICABILITY OF ULTIMATE RUPTURE STRENGTH NON-PIPING COMPONENTS

Reference 2 also provided the NRC Staff's position that:

(1) The remaining components in the low-pressure systems should also be designed to a design pressure of 0.4 times the normal operating reactor pressure. This is shown in the DCD by revised boundary symbols on system design drawings, which includes the piping and components associated with the boundary symbols. A stated parameter (e.g., design pressure) of a boundary symbol on the system design drawing applies to the piping and components that extend away from the boundary symbol, including along any branch line, until another boundary symbol occurs on the drawing. The components include flanges, and pump seals, etc.

(2) A Class 300 valve is adequate for ensuring the pressure of the low-pressure piping system under full reactor pressure. The rated working pressure for Class 300 valves varies widely depending on material and temperature (ASME/ANSI B16.34).

3K.8 RESULTS

The results of this work are incorporated into the ESBWR system drawings.

3K.9 VALVE MISALIGNMENT DUE TO OPERATOR ERROR

The ESBWR design with the ISLOCA ultimate rupture strength applied for the boundary described by this appendix and its attachment, has extended the increased design pressure (ultimate rupture strength) over the full extent of regions that could potentially experience reactor pressure, so that operator misaligned valves will not expose piping to reactor pressure not designed to the URS pressure.

3K.10 SUMMARY

Based on the NRC staff's new guidance cited in References 1 through 4, the ESBWR is in full compliance. For ISLOCA considerations, a design pressure of at least the URS design pressure and pipe having a minimum wall thickness equal to standard grade has been provided as an adequate margin with respect to the full reactor operating pressure, by applying the guidance recommended by Reference 2. This design pressure was applied to low pressure piping at the applicable boundary symbols on the system drawings, therefore imposing the requirement on the associated piping, valves, pumps, tanks, instrumentation and other equipment shown between boundary symbols. Notes were added to each URS upgraded drawing, requiring pipe to have a minimum wall thickness equal to standard grade and requiring valves with a design pressure of at least the URS design pressure to be a minimum of Class 300.

3K.11 REFERENCES

3K-1 USNRC, Dino Scaletti, NRC, to Patrick Marriott, "GE, Identification of New Issues for the General Electric Company Advanced Boiling Water Reactor Review," September 6, 1991.

3K-2 Chester Poslusny, NRC, to Patrick Marriott, "GE, Preliminary Evaluation of the Resolution of the Intersystem Loss-of-Coolant Accident (ISLOCA) Issue for the Advanced Boiling Water Reactor (ABWR) - Design Pressure for Low-Pressure Systems," December 2, 1992, Docket No. 52-001.

3K-3 James M. Taylor, NRC, to The Commissioners, SECY-90-016, "Evolutionary Light Water Reactor (LWR) Certification Issues and Their Relationship to Current Regulatory Requirements," January 12, 1990.

3K-4 James M. Taylor, NRC, to The Commissioners, SECY-93-087, "Policy, Technical, and Licensing Issues Pertaining to Evolutionary and Advanced Light-Water Reactor (ALWR) Designs," April 2, l993.

3K-5 Jack Fox, GE, to Chet Poslusny, NRC, "Proposed Resolution of ISLOCA Issue for ABWR," October 8, 1992.

3K-6 Jack Fox, GE, to Chet Poslusny, NRC, "Resolution of Intersystem Loss of Coolant Accident for ABWR," April 30, 1993.

ULTIMATE RUPTURE STRENGTH SYSTEM BOUNDARY EVALUATION

3KA.1 CONTROL ROD DRIVE SYSTEM

3KA.1.1 System URS Boundary Description

The Control Rod Drive (CRD) system interfaces with the reactor in a manner that makes low pressure piping over pressurization very unlikely. The minimum failure path from the reactor to the low pressure piping has three check valves in series and the second check valve is 12.7 mm in size. This path is from the purge flow channels of the CRD, out through the first check valve in the CRD housing, through the purge supply line that has the second 12.7 mm check valve, and to the pump discharge check valve. An alternate path through the accumulator charging line has additionally the normally closed scram valve, and this path is less likely for failure, therefore not considered. The path from the pump discharge, back through the pump to its suction, and back through the suction lines to the condensate storage tank (CST) or the condensate feedwater source is an open path. The open pump suction pipeline is a minimum 100 mm diameter through the pump suction filters in the normal mode of operation, and 200 mm diameter when the suction filter bypass lines are open during the reactor high pressure makeup mode of operation. The CRD pumps run continuously while the reactor is at operating pressure, which prevents reactor pressure from reaching the low pressure piping except for the unlikely case when both CRD pumps have failed. Therefore, an ISLOCA condition from a 12.7 mm diameter source could only occur when three check valves in series fail open at the same time both CRD pumps have failed. The ISLOCA guidelines do not provide credit for this rare condition, so the low pressure piping has been upgraded to the URS design criteria over the entire low pressure piping region of the CRD system. The suction path through the Condensate Storage and Transfer System (CS&TS) to the CST from the CRD interface is an open path whose design pressure was not upgraded to URS design criteria. The piping design of the primary suction path through the C&FS has not been established, but if a check valve is in the path, the design pressure up to and including the check valve will be the URS design pressure.

The normal key assumption, as stated in the Boundary Limits in Section 3K.3 above, that the valve adjacent to a low pressure sink remains closed, means that the pump discharge check valve remains closed as a given. However, this valve is in the high pressure piping, which is unique for the CRD system according to this accepted line of reasoning. The low pressure piping would not have to be upgraded because it would not experience the high reactor pressure. However, the low-pressure piping has been designed to the URS design pressure based on the guidance that states "for all interfacing systems and components which do not meet the full URS criteria, justification is required, which must include engineering feasibility; not solely a risk benefit analysis." Designing the low-pressure piping to the URS design pressure is feasible and was done.

3KA.1.2 Downstream Interfaces

Other systems are listed below that interface with the CRD system and could possibly be exposed to reactor pressure. A description of the interface location and a statement of its applicability to ISLOCA are given.

- RWCU/SDC system at the output of the CRD pump discharge filter units. The RWCU/SDC design pressure exceeds the URS design pressure without upgrade.

- NBS at the output of the CRD pump discharge filter units. The NBS design pressure exceeds the URS design pressure without upgrade.
- CS&TS provides an alternate source of water for the CRD system if the C&FS is not available. Its interfaces with the CRD system are located at pump suction from and system return to the CST. This line cannot be pressurized because of the open communication to the CST, and the CST is vented to atmosphere. There is no source to pressurize the CS&TS line because of closed pump discharge check valves in the CRD URS region.
- C&FS provides a source of water for the CRD pump suction from the turbine building condensate supply. This system is expected to be an open path to a large source similar to CS&TS. Because of the open path, the piping was not considered practical for upgrade to the URS design pressure.
- Process Sampling System (PSS) at the output of the CRD pump discharge filter units. The PSS design pressure exceeds the URS design pressure without upgrade.

3KA.1.3 Low-Pressure Piping Systems and Components Designed to URS Pressure

The following is a listing of low-pressure piping systems and components within CRD that are designed to the minimum URS design pressure of 2.82 MPaG based on the ISLOCA considerations outlined in Appendix 3K.

Pipeline/Component Description (see Figure 4.6-8):

CRD Pump Suction Piping and Associated Components

3KA.2 STANDBY LIQUID CONTROL SYSTEM

3KA.2.1 System URS Boundary Description

The SLC system is a high pressure system which injects enriched sodium pentaborate solution inside the reactor through normally closed squib valves. The leakage path includes two 80 mm check valves in series in addition to a redundant set of normally closed pyrotechnic-type squib valves. The entire SLC system is designed for pressure higher than reactor pressure except the low pressure section from piston pump suction to open mixing drum used for preparation of sodium pentaborate solution. Instrumentation, pressure relief, drain piping and valving are designed to higher than URS design criteria to reduce the level of pressure challenge to these components. The system does not require upgrade to URS design pressure.

3KA.2.2 Downstream interfaces

The SLC system has no further downstream system interfaces that could possibly be exposed to reactor pressure.

3KA.2.3 Low Pressure Piping Systems and Components Designed to URS Pressure

None.

3KA.3 REACTOR WATER CLEANUP/SHUTDOWN COOLING SYSTEM

3KA.3.1 System URS Boundary Description

The RWCU/SDC system is a high pressure system that is designed above the URS pressure with the following exception. Low pressure piping connected to the condenser and the liquid waste management system are provided at the downstream of the overboarding line isolation valves. On the upstream side of the isolation valves, there is a pressure reducing control valve that reduces the pressure before the flow enters the low pressure piping.

3KA.3.2 Downstream Interfaces

Other systems are listed below that interface with RWCU/SDC system and could possibly be exposed to reactor pressure. A description of the interface location and a statement of its applicability to ISLOCA are given.

- FAPCS interfacing piping from the reactor well at the upstream of the Train B of RWCU/SDC system non-regenerative heat exchanger has two locked closed isolation valves in series and the piping provides an open free path to reactor well which is an atmospheric pressure pool.
- FAPCS Low Pressure Coolant Injection (LPCI) interfacing piping with Train B of RWCU/SDC system return piping to Feedwater Line A is designed to a pressure that is above the URS pressure.
- CRD system interfacing piping with Train A of RWCU/SDC system return piping to Feedwater Line B is designed to a pressure that is above the URS pressure.

3KA.3.3 Low-Pressure Piping Systems and Components Designed to URS Pressure

The RWCU/SDC system low pressure piping connected at the downstream side of the overboarding line isolation valves is designed to pressure so that the stresses do not exceed the allowable stresses if the piping is subjected to full reactor pressure.

3KA.4 FUEL AND AUXILIARY POOLS COOLING SYSTEM

3KA.4.1 System URS Boundary Description

FAPCS is a low pressure piping system. The FAPCS connects to the RWCU/SDC system at three locations.

LPCI Connections

Its LPCI line is connected to RWCU/SDC system Loop B discharge line, which has an interface with the RCPB via the Feedwater Loop A discharge line (Figure 9.1-1). During reactor power operation, an unisolated break outside the RCPB could lead to an ISLOCA with the release of reactor coolant from the reactor system pressure boundary. In the FAPCS case, it would require multiple failures before a LOCA could occur, i.e., a break in the FAPCS piping plus failures of the Feedwater line check valves, which maintain the RCPB.

Containment Cooling Supply Header Connection

The FAPCS has a containment cooling supply header that provides GDCS pool return, suppression pool return, and drywell spray. This header is connected to the RWCU/SDC Loop A discharge line, which has an interface with the RCPB via the Feedwater Loop B discharge line (Figures 9.1-1 and 5.1-4). This connection supports post-LOCA shutdown cooling. When aligned to the reactor pressure vessel (RPV) during operational modes, the RWCU/SDC system operates at pressures higher than the FAPCS design pressure.

Suppression Pool Suction Line Connection

The suppression pool suction line is connected to the RWCU/SDC mid-vessel suction line, which interfaces directly with the RPV (Figures 9.1-1 and 5.1-4). This connection supports post-LOCA shutdown cooling. When aligned to the RPV during operational modes, the RWCU/SDC system operates at pressures higher than the FAPCS design pressure.

3KA.4.2 Downstream Interfaces

LPCI Line Interface

The following design features are provided to the interface between the high and low pressure interfaces to prevent an intersystem LOCA from occurring in FAPCS piping:

- Normally closed isolation valves consisting of an air-operated check valve and a motor-operated gate valve are provided on the LPCI line to separate the low pressure FAPCS piping from the high pressure condition in the RWCU/SDC pipe during reactor power operation.
- Valve position lights are provided to the operator in the main control room to confirm these isolation valves in the closed positions.
- The isolation valves are provided with a reactor pressure interlock that closes these valves and prevents them from opening whenever a high reactor pressure signal from the NBS is present. Reactor pressure signals ensure high reliability that the isolation valves remain closed.

- The FAPCS LPCI pipe and components between its interface with RWCU/SDC system and the motor-operated gate valve, including the gate valve are Quality Group B components designed to above URS pressure.

Containment Cooling Supply Header and FAPCS Suppression Pool Suction Line Interfaces

The connection lines associated with these interfaces, each contain a normally closed manual isolation valve and a blind spectacle flange to eliminate the possibility for overpressurization from the RWCU/SDC system Train A during all normal plant modes. This connection would only be manually opened in the unlikely event of a LOCA with fuel damage.

3KA.4.3 Low-Pressure Piping Systems and Components Designed to URS Pressure

The low pressure side of LPCI line and the rest of FAPCS piping are not required to be designed to the URS pressure because they are properly protected by the interlock closed isolation valves described above and by a relief valve installed on the LPCI line that protects the line from the overpressure condition, in case of leakage from the RWCU/SDC system side through the isolation valves.

3KA.5 NUCLEAR BOILER SYSTEM

3KA.5.1 System URS Boundary Description

The Main Steam (MS) and Feedwater piping and instrumentation are designed for reactor pressure and do not require upgrading to URS design pressure.

3KA.5.2 Downstream Interfaces

Other systems are listed below that interface with MS and could possibly be exposed to reactor pressure. A description of the interface location and a statement of its applicability to ISLOCA are given.

- The outlet of the CRD pump discharge filter units provide flow to the NBS. The CRD design pressure exceeds the URS design pressure without upgrade.
- RWCU/SDC provides high pressure return flow to the Feedwater lines. The RWCU/SDC design pressure exceeds the URS design pressure without upgrade.
- The Isolation Condenser system connects to a piping stub that connects the Depressurization Valves to the RPV, and also there are isolation condenser vent lines that connect to the main steamlines. The isolation condenser design pressure exceeds the URS design pressure without upgrade.

3KA.5.3 Low-Pressure Piping Systems and Components Designed to URS Pressure

None.

3KA.6 CONDENSATE AND FEEDWATER SYSTEM

3KA.6.1 System URS Boundary Description

The feedwater subsystem of the C&FS provides high pressure feedwater to the reactor. The feedwater subsystem is designed for high pressure except for the feedwater pump suction and the outlet of the feedwater cleanup valve.

In the feedwater pump, the transition to low pressure occurs from the feedwater pump suction into the direct contact feedwater heater (feedwater tank). The feedwater tank is a low pressure sink. The last closed valve in the path from the reactor is the feedwater pump discharge check valve. The piping to the feedwater pump suction can remain below the URS design pressure because it connects to the low pressure sink feedwater tank. The maintenance block valves in the feedwater pump suction lines were upgraded to a LOCKED OPEN status.

In the feedwater cleanup control valve, the transition to low pressure occurs from the feedwater cleanup control valve outlet connection into the condenser shell (hotwell). The hotwell is a low pressure sink. The last closed valve in the path from the reactor in the feedwater cleanup control valve is the normally closed block valve. The piping from the feedwater cleanup control valve to the condenser can remain below the URS design pressure because it connects to the low pressure sink hotwell.

The Condensate subsystem of the C&FS provides condensate to the feedwater tank, and the condensate subsystem is designed for a pressure higher than the feedwater tank, except for the condensate pump suction. The high pressure design includes the condensate polishing (hollow fiber filters and demineralizers) units and the feedwater bypass valve. The transition to low pressure occurs from the condensate suction into the High Pressure condenser shell (hotwell, which is a low pressure sink). The last closed valve in the path from the feedwater tank is the condensate pump discharge check valve. The piping to the condensate pump suction can remain below the feedwater tank design pressure because it connects the low pressure sink hotwell. The maintenance block valves in the condensate pump suction lines were upgraded to a LOCKED OPEN status.

3KA.6.2 Downstream Interfaces

None.

3KA.6.3 Low-Pressure Piping Systems and Components Designed to URS Pressure

The maintenance block valves in the condensate pump suction lines were upgraded to a LOCKED OPEN status.

3L. REACTOR INTERNALS FLOW INDUCED VIBRATION PROGRAM

3L.1 INTRODUCTION

A flow-induced vibration (FIV) analysis and testing program of the reactor internal components of the ESBWR initial plant demonstrates that the ESBWR internals design can safely withstand expected FIV forces for reactor operating conditions up to and including 100% power and core flow. Since ESBWR internals are similar to Advanced Boiling Water Reactor (ABWR) design, the ESBWR FIV program is considered to be non-prototype Category II per Reference 3L-1. This will require analysis and measurement of selected components as necessary and full inspection of reactor internals of the first plant. This program includes an initial evaluation phase that has the objective of demonstrating that the reactor internals are not subject to FIV issues that can lead to failures due to material fatigue. Throughout this part of the program, the emphasis is placed on demonstrating that the reactor components will safely operate for the design life of the plant. The results of this evaluation are shown in Reference 3L-1. The second phase of the program is focused on preparing and performing the startup test program that demonstrates through instrumentation and inspection that no FIV problems exist. This part of the program meets the requirements of Regulatory Guide 1.20 with the exception of those requirements related to preoperational testing that are not applicable to a natural circulation plant.

3L.2 REACTOR INTERNAL COMPONENTS FIV EVALUATION

The ESBWR reactor internals are part of an evolutionary Boiling Water Reactor (BWR) design, but fundamentally the components and function of the reactor vessel and internals are very similar to past BWRs. To a large extent, the ESBWR design of the components relies heavily on the prior design of internals in operating plants to assure that new vibration issues are not introduced. Also, to assure that the flow of steam or water in the reactor vessel is comparable to prior reactors, efforts were made to maintain traditional spacing and dimensional relationships of components. A unique feature of the ESBWR, with respect to FIV, is the fact that ESBWR is a natural circulation plant where no recirculation pumps exist that would create pressure pulses from the pump vanes that would travel into the reactor vessel. The recirculation pump's excitation has caused failures in components inside previous BWR reactor vessels. For the ESBWR this source of flow excitation does not exist. The design of the ESBWR reactor internals is shown in Figure 5.3-3.

3L.2.1 Evaluation Process – Part 1

The first step in the evaluation process was to establish selection criteria for reactor internal components related to susceptibility to vibration. All reactor internal components were considered as potential candidates for further evaluation. Each component is evaluated against the following selection criteria:

- Is the component safety-related?
- Is the component of a significantly different or new design compared to earlier BWRs?
- Does the component have a history of FIV-related problems?
- Is the component subjected to significantly different or new flow conditions?

Based on these criteria, the following internal component structures are considered to be candidates for additional evaluation and potential to be instrumented in the startup FIV test program:

- Steam Dryer Bank Hoods and End Plates based on history of past FIV related problems (e.g., fatigue cracking between hood and endplate).
- Steam Dryer Skirt based on history of past FIV-related problems (e.g., fatigue cracking between skirt and drain channels).
- Steam Dryer Drain Channels based on history of FIV-related problems (e.g., fatigue cracking between skirt and drain channels).
- Steam Dryer Support Ring based on history of FIV-related problems (e.g., steam dryer rocking).
- Chimney Assembly based on new design features (i.e., elongated chimney shell, partition assembly, chimney restraint), potential new flow conditions and limited ability to change the design due to dimensional and performance constraints.
- Chimney Head/Steam Separator assembly based on new design (i.e., shallow dished head or flat head with beam reinforcement, elongated standpipes and thinner stack materials).

- Shroud/Chimney assembly based on new design features (see Figure 3.9-8), and potential new flow conditions.
- Standby Liquid Control (SLC) internal piping based on new design routed through the shroud and is safety-related.

Components that were evaluated and concluded to require no further evaluation:

- Control Rod Drive Housing (CRDHs)
- Control Rod Guide Tubes
- In-Core Monitor Guide Tubes
- In-Core Monitor Housings

For each of these components, the length of the components have decreased from prior BWR product lines due to the plant having shorter fuel. This increases the natural frequencies for these components and moves the natural frequencies beyond the predominant frequencies measured at the prototype ABWR plant. Also, the flow velocities in the reactor pressure vessel (RPV) bottom head region have decreased and the calculated vortex shedding frequencies are well below the natural frequencies of the components in this region.

Other components such as the top guide and core plate that are not specifically identified as candidates for the instrumentation program are basically proven by trouble-free BWR experience, and have designs and flow conditions that are similar to prior operating BWR plants. Because most of the reactor internal components are large durable components where there has been no history of FIV issues, no FIV issues are anticipated. Also, because it is still early in the program, there is still the opportunity to make adjustments as necessary in the component designs to make them more resistant to FIV.

The results of the Part 1 evaluation are contained in Reference 3L-1.

The chimney assembly was a new component where only limited operating experience was available. Also, the chimney assembly is a structure where the geometry of the partitions places limitations on the plate thicknesses, has a long extended length, and is subject to high velocity two-phase steam flow. From this initial selection, a test and analysis program was established and the results are discussed in Subsection 3L.3.3. For this case, testing was required since no prior relevant test data was available for this component.

A steam dryer initial assessment was performed to study the acoustic and flow effects of the ESBWR configuration in comparison to the ABWR steam dryer design. The initial assessment determined that the increase in the size of the steam dryer support ring and skirt design and the increase in steam velocity did not have any adverse effects on the steam dryer structural integrity. However, at the time of the initial assessment, it was also recognized that the evaluation of BWR operating plant steam dryer loads was an ongoing program that would need to be ultimately factored into the ESBWR steam dryer design and evaluation effort. The progress of the replacement steam dryer program is now at a stage that a meaningful effort can now be planned for the ESBWR steam dryer. The detailed program that is planned is described in Section 3L.4. As a result of the advances in the understanding of steam dryer vibration, differential pressure loads and steam dryer design improvements (see Subsection 3L.2.3), the

ESBWR uses a steam dryer design patterned after the ABWR and replacement steam dryer designs developed for BWR plants.

The SLC internal piping is based on a new design and is safety-related. The SLC line is in the downcomer flow field and is subject to vortex shedding flow induced vibration. The vibration characteristics of the SLC internal piping is evaluated as described in Section 3L.5.5.1.4. The SLC line is instrumented as part of the startup test program as shown in Table 3L-4.

3L.2.2 Evaluation Process – Part 2

The next phase of the evaluation program performed additional work to demonstrate the adequacy of the components where Part 1 determined additional evaluations were required. The objective of this phase completes a more quantitative evaluation and documents the existing facts regarding the individual components. This part of the evaluation focuses on the following:

(1) Similarities and differences of the ESBWR component design configurations as compared to prior designs. In most cases the comparison design is ABWR components.

(2) A review of prior calculations for the components being evaluated, to establish the mode shapes and natural frequencies. Calculation of the ESBWR component natural frequencies is determined based on this data.

(3) Prior plant startup instrumentation data from the prototype ABWR plant is reviewed to establish the magnitude and frequency of the measured vibration data, and to review the resulting calculated stress for the components that were instrumented.

(4) A comparison of the flow paths and characteristics of the ESBWR design is compared to prior BWR designs where a startup vibration test program was conducted.

(5) Using the results of the above items, an assessment as to the likelihood of FIV issues is completed and documented in Reference 3L-1. There are two potential outcomes for the components evaluated using this process. The first potential outcome is that the evaluation conclusively demonstrate that FIV will not be an issue for that component and that plant safety-related functions are not adversely affected. In this case, no further evaluation is necessary. The other potential outcome is that the evaluation performed using Steps 1 through 4 is not sufficient to conclusively disposition potential FIV issues for the component. In this case, additional evaluations or instrumentation is necessary. For the components requiring further evaluation or instrumentation, no FIV issues are anticipated. The objective of further evaluation or instrumentation is to provide additional supporting information that clearly demonstrates that FIV is not an issue.

The results of these evaluations are documented in Reference 3L-1.

During the evaluation phase, the process as identified in Subsection 3.9.2.3 was followed to prepare finite element analysis (FEA) models per the details shown in Subsection 3L.5.5.1. This information will then be used as the basis for the instrumentation in the ESBWR startup test program. It should be noted that the SLC internal piping, steam dryer and chimney have already been identified in Section 3L.2.1 for inclusion in the startup test program.

3L.2.3 Design and Materials Evaluation

FIV-related fatigue cracking and intergranular stress corrosion cracking are major causes of reactor internal component degradation observed in operating BWRs. The ESBWR reactor internals are designed to resist fatigue loading. Design evaluations are conducted to evaluate load paths and streamline structural discontinuities thus reducing stress risers that contribute to fatigue failure. Welds are reduced by integrating components through machining or castings. Some components are specifically designed for intersections between larger components so groove welds can be used in lieu of fillet welds. Design evaluations are also conducted to stiffen the component structure moving component fundamental frequencies above the frequency range associated with hydrodynamic and acoustic loads.

The reactor internal materials, as specified in Subsection 4.5.2, are resistant to corrosion and stress corrosion cracking in the BWR steam/water environment.

3L.3 CHIMNEY ASSEMBLY AND SLC INTERNAL PIPING EVALUATION

3L.3.1 Design and Materials

The chimney assembly design consists of a chimney shell and partition assembly. The chimney shell has a bottom ring that rests on the top guide, see Figure 3.9-8. The chimney partitions rest on the top surface of the top guide. The top of the partition assembly is supported against the inside of the chimney shell. The partition assembly is a grid of square structures, each of which encompasses and lines up with 4 top guide fuel cells (i.e.,16 fuel assemblies). The chimney shell and partitions are fabricated using austenitic stainless steel plate, see Table 4.5-1. The partitions are full length welded near the junctions of the partitions. The chimney shell that houses the partition structure is cylindrical, similar to the core shroud. A sketch of the chimney assembly is shown in Figure 3L-1. Because the chimney shell has structural characteristics similar to the shroud, this component is considered under the generic reactor internals vibration program, and the partition assembly is considered to be the unique component that requires special vibration consideration.

3L.3.2 Prior Operating Experience

Prior to the ESBWR design, only one other BWR plant had operating experience with this chimney design. This was the BWR-1 Dodewaard plant, which did not have a vibration instrumentation program. For this plant, the partition size was a square configuration that encompassed four fuel assemblies within the cell, which is ¼ the dimension of the ESBWR partitions. Also, the height was approximately ½ the length of the ESBWR design. The partition thickness was 3 mm (0.12 in) as compared to 9 mm (0.35 in) for ESBWR, and the partitions were welded together using intermittent fillet welds as compared to full-length groove welds in joints that are positioned away from the partition intersections for ESBWR. Although the partitions were not instrumented, the plant operated for almost 30 years without any issues related to the chimney structure. Since the design of the ESBWR chimney partitions is more fatigue-resistant, this Dodewaard operational history provides additional assurance that the ESBWR will not have FIV issues.

3L.3.3 Testing and Two-phase Flow Analysis

For the ESBWR, the chimney partition assembly constitutes a structure that has a unique vibration evaluation program as part of the ESBWR reactor internals. In order to assess its capability to maintain structural integrity under plant operating conditions, a flow induced vibration evaluation is performed in which the fluctuating fluid force acting on the partition plates is evaluated by a combination of scale tests and two-phase flow analysis.

The test scope comprised a 1/6-scale (100 mm × 100 mm), a 1/12-scale (50 mm × 50 mm) and one almost full scale (500 mm × 500 mm) chimney. Tests use a mixture of air and water to simulate two-phase flow testing inside the chimney. The velocities of the gas and liquid components of the two-phase flow were adjusted to be consistent with ESBWR values to simulate the actual two-phase flow pattern. Different inlet flow conditions in the smaller scale models were used to investigate the influence of inlet mixing within the partition to simulate different power conditions. Pressure fluctuation was measured on the inner surface of the

partition wall with pressure transducers. The 1/6-scale model was later divided into 4 cells for investigating the pressure fluctuations between cells (Reference 3L-1).

The scale model tests were used to investigate the effect of model size on the magnitude of pressure fluctuations acting on the partition wall in steam-water conditions.

A structural analysis of the chimney and partition design was then conducted using finite element methods. First, an eigenvalue analysis determined that the lowest natural frequency of the chimney structure is approximately 54 Hz. This was sufficiently greater than the predominant frequency of pressure fluctuation determined by testing (2 Hz) that a static analysis of the structure was concluded to be proper. Based on the results of that static analysis, a maximum stress of 32.8 MPa (4,760 psi), with a fatigue strength reduction factor of 2, was calculated near the edge of the partition plate joint. This stress value is bounded by the allowable vibration peak stress amplitude of 68.95 MPa (10,000 psi) specified in Subsection 3.9.2.3.

3L.3.4 SLC Internal Piping Evaluation

The SLC line is a new ESBWR component that enters the downcomer flow region at two locations, 180 degrees apart, in the annulus between the RPV and the chimney. The SLC piping continues down to the shroud where the piping divides and penetrates the shroud at two locations each. Since the configuration of the SLC line has a new geometry and location within the RPV, this component is analyzed and tested during initial startup.

A finite element beam model of SLC line was constructed and analyzed for FIV induced stresses (see Subsection 3L.5.5.1.4). The fundamental frequency of the SLC line was determined to be 31.2 Hz, which is well separated from the vortex shedding frequency of 5.5 Hz and, therefore, of no concern.

The SLC piping in the annulus is instrumented during startup of the first ESBWR. A summary description of these sensors is shown in Table 3L-4.

3L.4 STEAM DRYER EVALUATION PROGRAM

3L.4.1 Steam Dryer Design and Performance

The ESBWR steam dryer consists of a center support ring with dryer banks on top and a skirt below. A typical steam dryer is shown in Figure 3L-2. The dryer units, made up of steam drying vanes and perforated plates, are arranged in six parallel rows called dryer banks. The ESBWR steam flow rate is approximately 15% higher than ABWR. The ESBWR RPV has a larger inner diameter at the vessel flange than ABWR, which allows dryer banks to be extended, thereby accommodating the higher steam flow. The additional dryer unit face area results in approximately the same flow velocity through the drying vanes as ABWR and help maintain moisture removal performance requirements. The support ring is supported by RPV support brackets. The steam dryer assembly does not physically connect to the chimney head and steam separator assembly. The cylindrical skirt attaches to the support ring and projects downward to form a water seal around the array of steam separators. Normal operating water level is approximately mid-height on the steam dryer skirt.

Wet steam from the core flows upward from the steam separators into an inlet header, then horizontally through the inner perforated plate, the dryer vanes and the outlet perforated plates, then vertically in the outlet header and out into the RPV dome. Dry steam then exits the RPV through the steam outlet nozzles. Moisture (liquid) is separated from the steam by the vane surface and the hooks attached to the vanes. The captured moisture flows downward, under the force of gravity, to a collection trough that carries the liquid flow to vertical drain channels. The liquid flows by gravity through the vertical drain channels to the lower end of the skirt where the flow exists below the normal water level.

The prototype for the ESBWR steam dryer builds on the successful operating experience of the ABWR steam dryer. Although the ESBWR steam dryer will have a larger diameter and wider vane banks to accommodate close to 15% higher steam flow, the vane height, skirt length, outer hood setback from the main steam nozzle, and water submergence will be similar to the ABWR steam dryer. The ESBWR steam dryer also draws experience from operating plant replacement steam dryer program fabrication, testing and performance. Steam dryers recently tested and installed in BWR/3 and BWR/4 plants had experienced high pressure loads under extended power uprate operating conditions. These loads were characterized by an abnormally high pressure tone at approximately 155 Hz that emanated from an acoustic resonance in one or more of the safety relief valve (SRV) standpipes. The replacement steam dryers were specifically designed to withstand the FIV and acoustic resonance loading that led to fatigue failures in the steam dryers for these plants. In addition, the SRV standpipes and main steamline branch lines in ESBWR are specifically designed to mitigate SRV/branch line resonances that could be a significant contributor to steam dryer loading. Table 3L-1 provides a comparison between major configuration parameters of the ESBWR, the ABWR prototype and a BWR/3 replacement steam dryer.

3L.4.2 Materials and Fabrication

Current industry and replacement steam dryer practices are applied to the materials and fabrication of the ESBWR steam dryer. The steam dryer materials are selected to be resistant to corrosion and stress corrosion cracking in the BWR steam/water environment, see Table 4.5-1.

3L.4.3 Load Combinations

Design loads for the steam dryer are based on evaluation of the ASME load combinations provided in Table 3.9-2 except that the load definitions that pertain to the steam dryer are modified as shown in Table 3L-2. These load combinations consist of deadweight loads, static and fluctuating differential pressure loads (including turbulent and acoustic sources), seismic, thermal, and transient acoustic and fluid impact loads.

3L.4.4 Fluid Loads on the Steam Dryer

During normal operation, the steam dryer experiences a static differential pressure loading across the steam dryer plates resulting from the pressure drop of the steam flow across the vane banks. The steam dryer also experiences fluctuating pressure loads resulting from turbulent flow across the steam dryer and acoustic sources in the vessel and main steamlines. During transient and accident events, the steam dryer also experiences acoustic and flow impact loads that result from system actions (e.g., turbine stop valve closure) or from the system response (e.g., the two-phase level swell following a main steamline break).

Of particular interest are the fluctuating acoustic pressure loads that act on the steam dryer during normal operation that has led to fatigue damage in previous steam dryer designs. In the low frequency range, these pressure loads have been correlated with acoustic sources driven by the steam flow in the outer hood and vessel steam nozzle region. In the high frequency range, acoustic resonances in the stagnant steamline side branches (e.g., relief valve standpipes) have coupled with the vessel, thus imparting a pressure load on the steam dryer. Vessel acoustic modes may also be excited by sources inside and outside the vessel, resulting in additional acoustic pressure loads in the middle frequency range.

A detailed description of the pressure load definition methodology for the ESBWR steam dryer is provided in Reference 3L-5. The ESBWR steam dryer fluctuating load definition is based on the load definitions based on in-plant measurements that were developed for the steam dryer structural analyses in several extended power uprates. These load definitions provide a fine-mesh array of pressure time histories that are consistent with the structural finite element model nodalization. Multiple load definitions are used in the ESBWR steam dryer analysis in order to evaluate the steam dryer response over a wide frequency range. These load definitions include the limiting low and high frequency loads observed in plants with instrumented steam dryers. Based on the unique plant configurations (e.g., dead legs in the main steamlines that may amplify the low frequency acoustic response) and operating conditions (e.g., high steam line flow velocities) in these instrumented plants, the load definitions from these plants are expected to provide a robust load definition for the ESBWR. The load definitions developed for the ESBWR are also benchmarked against the instrumented steam dryer measurements taken during startup testing for the lead ABWR. The ESBWR and ABWR have the same vessel diameter and vessel steam nozzle design (with flow restricting venturi), and similar main steamline layouts; therefore, it is expected that the frequency content of the ESBWR steam dryer pressure loads will be similar to those measured on the ABWR.

3L.4.5 Structural Evaluation

A FEA is performed to confirm that the ESBWR steam dryer is structurally acceptable for operation. The FEA uses the load definitions described in Subsection 3L.4.4. The FEA is

performed using a whole steam dryer analysis model to determine the most highly stressed locations, also see Subsection 3L.5.5.1.3. The FEA consists of dynamic analyses for the load combinations identified in Subsection 3L.4.3. If required, locations of high stress identified in the whole steam dryer analysis are further evaluated using solid finite element models to more accurately predict stresses at these locations. Additional analysis confirms that the RPV steam dryer support lugs accommodate the predicted loads under normal operation and transient and accident conditions. (Also see Subsection 3L.5.5.1.3.)

The structural evaluation of the ESBWR steam dryer design is presented in (Reference 3L-6).

3L.4.6 Instrumentation and Startup Testing

The ESBWR steam dryer is instrumented with temporary vibration sensors to obtain flow induced vibration data during power operation. The primary function of this vibration measurement program is to confirm FIV load definition used in the structural evaluation is conservative with respect to the actual loading measured on the steam dryer during power operation, and to verify that the steam dryer can adequately withstand stresses from flow induced vibration forces for the design life of the steam dryer. The detailed objectives are as follows:

- Determine the as-built modal parameters: This is achieved by impact (hammer) testing the steam dryer components. The results yield natural frequencies, mode shapes and damping of the components for the as-built steam dryer. These results are used to verify portions of the steam dryer analytical model.
- Confirm FIV loading: In order to confirm loading due to turbulence, acoustics and other sources, dynamic pressure sensors are installed on the steam dryer. These measurements will provide the actual pressure loading on the steam dryer under various operating conditions.
- Verify the design: Based on past knowledge gained from different steam dryers, as well as information gleaned from analysis, selected areas are instrumented with strain gages and accelerometers to measure vibratory stresses and displacements during power operation. The measured strain values are compared with the allowable values (acceptance criteria) obtained from the analytical model to confirm that the steam dryer alternating stresses are within allowable limits.

The objective of the steam dryer hammer test is to identify the as-built frequencies and mode shapes of several key components of the steam dryer at ambient conditions. Different components of the steam dryer have different frequencies and mode shapes associated with them. The areas of interest are the drain channel, the outer hood panel, the inner hood panel, the side panel, divider plates and the skirt. These results are used to verify portions of the finite element model of the steam dryer.

The concern is that local natural frequencies may coincide with existing forcing functions to cause resonance conditions. The resonance could cause high stresses to occur in localized areas of the steam dryer. A finite element modal analysis can calculate the frequency and mode shape of a component, but they are only ideal approximations to the real values due to variations such as plate thickness, weld geometries, configuration tolerances and residual stresses that affect the assumed boundary conditions in the finite element model. The mode shapes and frequencies

determined by the hammer test are used to validate the finite element modal analysis and determine the uncertainty in the finite element model predictions of the modal response.

The impact hammer test is performed following final assembly of the steam dryer. The tests are performed with the steam dryer resting on simulated support blocks similar to the way the steam dryer is seated inside the reactor vessel.

Two types of impact tests are performed on the steam dryer: a (1) Dry hammer test, and a (2) Wet hammer test with the steam dryer skirt and drain channels partially submerged in different water levels (to approximate in-reactor water level). Both tests are conducted in ambient conditions. Temporary bondable accelerometers are installed at predetermined locations for these tests. An instrumented hammer is used to excite the steam dryer at several pre-determined locations and the hammer impulse force and the structural responses from the accelerometers are recorded on a computer. The data is then used to compute experimental mode shape, frequency and damping of the instrumented steam dryer components using appropriate software. The temporary sensors are then removed and the steam dryer is cleaned prior to installation in to the reactor vessel.

The steam dryer vibration sensors consist of strain gauges, accelerometers and dynamic pressure sensors, appropriate for the application and environment. A typical list of vibration sensors with their model numbers is provided in Table 3L-3. The selection and total number of sensors is based on past experience of similar tests conducted on other BWR steam dryers. These sensors are specifically designed to withstand the reactor environment. The pressure instrument locations are selected to provide a good measure of the acoustic loading through the frequency range of interest. A proper distribution of the steam dryer pressure instruments facilitates accurate assessments of FIV loads. The layout of the steam dryer pressure instrument locations are evaluated using the RPV acoustic FEA Model. The distribution of steamline instruments are determined using the Plant Based Load Evaluation model (Reference 3L-8) to provide an adequate measure of the acoustic loading through the frequency range of interest. The instrument layout permits steam dryer load development with steam dryer data alone, steamline data alone, or a combination using both sets of data.

The steam dryer startup test and monitoring power ascension limits are developed on a similar basis as the monitoring limits used for recent extended power uprate replacement steam dryers. The power ascension limits are based on the final FIV analysis performed for the as-built steam dryer. The strain gage and accelerometer instruments are mounted in locations that provide measurements that are strongly coupled with projected high stress locations. Additional strain gauges and accelerometers are used as needed to provide an overall validation of the structural finite element model. Specific information utilized to verify the FIV load definition during startup testing will be described further in a revision to Reference 3L-5.

Each of the sensors are pressure tested in an autoclave prior to assembly and installation on the steam dryer. An uncertainty analysis is performed to calculate the expected uncertainty in the measurements.

Prior to initial plant start-up, strain gauges are resistance spot-welded directly to the steam dryer surface. Accelerometers are tack welded to pads that are permanently welded to the steam dryer surface. Surface mounted pressure sensors are welded underneath a specially designed dome cover plate to minimize flow disturbances that may affect the measurement. The dome cover

plate with the pressure transducer are welded to an annular pad that is welded permanently to the steam dryer surface. The sensor conduits are routed along a mast on the top of the steam dryer and fed through the RPV instrument nozzle flange to bring the sensor leads out of the pressure boundary. Sensor leads are routed through the drywell to the data acquisition area outside the primary containment.

Pressure transducers and accelerometers are typically piezoelectric devices, requiring remote charge converters that are located in junction boxes inside the drywell. The data acquisition system consists of strain gauges, pressure transducers and accelerometer signal conditioning electronics, a multi-channel data analyzer and a data recorder. The vibration data from all sensors is recorded on magnetic or optical media for post processing and data archival. The strain gauges, accelerometer and pressure transducers are field calibrated prior to data collection and analysis. The temporary vibration sensors are removed after the first outage.

In addition to the instrumentation on the steam dryer, the main steamlines are instrumented in order to measure the acoustic pressures in the main steamlines. The main steamline pressure measurements with the steam dryer pressure measurements are used as input to an acoustic model for determining the pressures acting on the steam dryer in order to provide a pressure load definition for use in performing confirmatory structural evaluations.

During power ascension, the steam dryer instrumentation (strain gages, accelerometers and dynamic pressure transducers) is monitored against established limits to assure the structural integrity of the steam dryer is maintained. If resonant frequencies are identified and the vibrations increase above the predetermined criteria, power ascension is stopped. The acceptability of the steam dryer for continued operation is evaluated by revising the load definition based on the measured loading, repeating the structural analysis using the revised load definition, and determining revised operating limits based on the results of the structural analysis.

Specific steam dryer inspection recommendations for the ESBWR steam dryer design are developed based on the final as-built design and structural analysis results. The steam dryer inspection recommendations are consistent with Reference 3L-2, and consistent with Boiling Water Reactor Vessel Internals Program guidance issued by the BWR owners group specific to reactor internals vibration.

3L.5 STARTUP TEST PROGRAM

This section summarizes the program for preparing and performing the startup FIV testing including the methods and analysis that are performed when the startup test data is available. This section assumes that the initial selection of components identified in Subsection 3L.2.1 will be part of the analysis and instrumentation associated with the startup testing program.

Testing requirements of this program are incorporated into the Initial Test Program detailed in Section 14.2 through the Reactor Internals Vibration Test described in Subsection 14.2.8.2.11. The test procedure acceptance criteria, derived from the evaluations described in the appendix, are classified by definitions in the Startup Administrative Manual outlined in Subsection 14.2.2. Direction on the quality process to be used to control the resolution of test acceptance criteria failures is incorporated in the Startup Administrative Manual and specific guidance may be included in the test procedure.

3L.5.1 Component Selections

The components that are selected for instrumentation are determined from the initial evaluation phase as discussed in Subsection 3L.2.1. Many different sensors of four different types are utilized to measure vibration related data on several different reactor internal component structures.

3L.5.2 Sensor Locations

Having determined the components to instrument during the test, sensor locations on those structures are determined based upon the analytically predicted mode shapes for each structure, or calculated maximum stress locations, or, sensor locations based on CFD modeling, and in some cases, based upon the location of past FIV-related failures. Strain gages and accelerometers are used for monitoring vibration levels. Strain gages measure local strain from which local stress can be calculated. Based on knowledge of the natural mode shapes of the structure or calculated stress distribution, peak stresses at other locations on the structure are determined from these data. Accelerometers (with double integration of the output signal) provide measurements of local structural displacement. This information, together with knowledge of the natural mode shapes of the structure or calculated stress distribution, allows the peak stresses to be calculated at other locations. Pressure sensors are also utilized at various locations in the vessel. These are not used to measure structural vibration directly, but rather to measure the pressure variation that is often a forcing function that causes the structural vibration. These pressure sensor data are very useful for determining the source of any excessive vibration amplitudes, if they are to occur during testing. Sensor types and locations are listed in Table 3L-4.

3L.5.3 Test Conditions

Test conditions are selected early in the FIV test program to consider a variety of steady-state and transient operating conditions that could be expected to occur during the life of the plant. Tests are identified in the Initial Test Program schedule during heat up and power operation testing phases, when at steady-state conditions and with transient test sequences, as necessary. Specific conditions for testing are integrated into the initial startup by inclusion in the Initial Test Program schedule outlined in Subsections 14.2.2.4 and 14.2.7. Hold points and milestones are

included to allow for test result review and approval, overall phase testing approval and authorization to proceed with the next testing phase documented in the Startup Administrative Manual, which includes time for COL Holder and NRC staff interactions.

RPV internals vibration at steady-state conditions is more important than transient conditions for evaluating the structural integrity of components. This is because steady-state normal operating conditions can exist for long periods of time, allowing a very large number of vibration cycles to accumulate. The FIV caused by transient operating conditions is far less influential because of the relatively low number of vibration cycles that occur over the lifetime of the plant. The purpose in including transient test conditions is to confirm that extremely high stresses do not occur during transients. This check is accomplished during the actual startup transient tests by the vibration engineers monitoring the test equipment. Transient stress levels near the allowable limit would be easily and immediately detected by the vibration engineers. No such high stress levels are expected to occur during the ESBWR initial plant FIV transient tests. Therefore, for the purposes of confirming the structural capability of the internals, steady-state test conditions are the most important conditions to evaluate.

Total volumetric core flow rate is also an important parameter that affects the vibration magnitude of the internals. Vibration amplitude generally increases as the volumetric flow rate increases.

3L.5.4 Data Reduction Methods

Basically, two types of data reduction are performed: (1) time history analyses and (2) spectrum analyses. In either data reduction method, the measured peak-to-peak (p-p) value of each sensor signal is compared to the allowable p-p value. Even though time history and/or spectrum analyses are performed for each selected sensor and test condition, the results from only one data reduction method are used for comparison to the allowable values. The selection of the method is dependent on the analysis method used for data evaluation. Table 3L-5 describes the method of data reduction that is applicable to each component.

3L.5.4.1 Time History Analysis

The time history method uses the analyzer's time capture mode of operation. Time capture is performed for a period of several minutes for all the selected sensors and test conditions. The frequency bandwidth for the time capture is chosen to accommodate 0-200 Hz as a minimum for most channels.

For comparison to the allowable vibration amplitude, the measured peak-to-peak (p-p) value over specified bandwidths needs to be obtained for sensors in specific components. The bandwidths used for p-p measurements for various components are shown in Table 3L-5. There are four bandwidths for time history p-p measurement: 0-200 Hz, 0-100 Hz, 100-200 Hz and 0-1600 Hz. The 0-1600 Hz is used only for the accelerometer for the purpose of detecting impacts. The other three bandwidths are used for normal vibrations.

For the 0-200 Hz bandwidth, the maximum p-p values over several minutes of data for selected sensors and test conditions are obtained directly from the time capture. Specification of the bandwidth for time capture (0-200 Hz) automatically results in a low-pass filtered signal.

In order to obtain the maximum p-p in the 0-100 Hz range, the histogram operation is employed on the time capture traces. When the bandwidth (0-100 Hz) is specified in the histogram operation, the signal is automatically low-pass filtered in the specified frequency range. The histogram measurement shows how the amplitude of the input signal is distributed between its maximum and minimum values. The horizontal axis is the amplitude axis and usually the center of the horizontal axis is the zero point with positive and negative amplitudes on either side of the zero. The vertical axis is the number of counts or the number of times a particular amplitude value occurs in a time-history. From the histogram, the maximum positive and maximum negative values in a time history can be obtained, from which the maximum p-p of the time history can be obtained.

For the 100-200 Hz bandwidth range, the time captured traces are filtered in the 100-200 Hz range and the p-p is obtained over a period of several minutes. The filtered time history between 100 and 200 Hz is scanned to obtain maximum and minimum values to get p-p values.

For the 0-1600 Hz range for accelerometers, the time history signal is examined for the presence of any impacts.

3L.5.4.2 Frequency Analysis

The spectrum shows the signal in the frequency domain. There are several different types of spectra. The linear spectrum is the Fourier transform of the time history signal. The auto power spectrum is the magnitude squared of the linear spectrum, which is computed by multiplying the Fourier transform of the signal by its complex conjugate. This spectrum contains magnitude information only. The spectra generated for ESBWR data reduction are auto power spectra. The spectra for selected sensors and test conditions are obtained from the captured time history described previously.

Signal averaging is used to obtain better statistical properties. It is possible to select the number of averages and the type of averaging. There are three types of averaging:

- Stable (normal)
- Exponential
- Peak Hold

The averaging method used for ESBWR is “Peak Hold”, which compares the current spectral value of each individual frequency during the analysis interval to the last spectral value and holds the larger of the two. The resultant spectrum is a composite spectrum which envelopes the spectrums of all analysis intervals. The parameters used in the spectrum generation are described in Table 3L-6**.**

In order to obtain greater accuracy on amplitude of the frequency spectrum, a flat top window is selected.

From the spectrum, the dominant frequencies of vibration and their root mean square (RMS) magnitudes can be identified. The frequency is in the horizontal axis and the RMS magnitude is in the vertical axis. The p-p value of vibration at each dominant frequency is obtained by multiplying the RMS value (from the peak hold spectrum) by a factor of 6. This factor is obtained from many years of reactor experience and is a conservative estimate of the p-p value.

This p-p value is then used to compute the stress at the sensor location and the maximum stress in the structure.

3L.5.5 Data Evaluation Methods

This section describes the methods used to evaluate the reduced test data for the purpose of determining whether maximum stress levels are below the maximum allowable fatigue stress limits for the materials. A significant portion of this evaluation lies in the determination of the natural vibration modes of the instrumented components as determined using finite element models. Subsection 3L.5.5.1 describes the finite element models used in this process. Subsection 3L.5.5.2 describes the steps involved in determining the maximum stress amplitudes from the reduced data.

3L.5.5.1 Finite Element Models

Dynamic analytical finite-element models are developed for the following ESBWR plant reactor internal components:

- Chimney Head and Steam Separators
- Shroud and Chimney
- Steam Dryer
- SLC Line

The dynamic analytical finite-element models are used to predict the natural vibration frequency, modal displacement, and modal strain and stress for each of the dominant vibration response modes. Descriptions of the finite-element models are given in the following sections.

3L.5.5.1.1 Chimney Head and Steam Separators

In order to determine the chimney head and steam separator vibration frequencies and mode shapes, a 3-dimensional model is developed using the ANSYS computer code (Reference 3L-3). The detailed model consists of the components that provide structural members within the assembly. Since the separator assembly units are the standard product used on prior BWR product lines, and that operates within the range of the design steam flow rates, detailed modeling is not required. In this model, each nodal point has four degrees of freedom, namely:

- radial displacement;
- tangential displacement;
- vertical displacement; and
- meridian rotation.

3L.5.5.1.2 Shroud and Chimney

In order to determine the shroud vibration frequencies and mode shapes, an axisymmetric shell model is developed using the ANSYS computer code (Reference 3L-3). The detailed shell model consists of both the RPV, chimney, chimney support, and shroud such that the hydrodynamic interaction effects between the components are accounted for. In this model, each nodal point has four degrees of freedom, namely:

- radial displacement;
- tangential displacement;
- vertical displacement; and
- meridian rotation.

The following assumptions are made in generating the axisymmetric shell model:

(1) Discrete components move in unison for steam separators, standpipes, and CRDHs and guide tubes.

(2) Masses are lumped at the nodal points. Rotational inertias of the masses are neglected.

(3) Stiffnesses of control rods, control rod drives, steam dryers, and in-core housings are neglected.

(4) Top guide and core plate masses are lumped to the shroud.

(5) Masses of CRDHs below the vessel are lumped to the bottom head.

Equivalent shells are used to model the mass and stiffness characteristics of the guide tubes, steam separators, and standpipes such that they match the frequencies obtained from a horizontal beam model.

Diagonal hydrodynamic mass terms are selected such that the beam mode frequencies of the shell model agree with those from the beam model.

The RPV, chimney and shroud are modeled as thin shell elements. The shell element data are defined in terms of thickness, mass density, modulus of elasticity, and Poisson's ratio for the appropriate material and temperature.

The natural frequencies and mode shapes of the shroud shell model are given in terms of two parameters, termed "n" and "m". The "n" parameter refers to the number of circumferential waves, while the "m" parameter refers to the number of axial half-waves. Thus, for beam types of vibration, n=1.

3L.5.5.1.3 Steam Dryer

The design of the steam dryer assembly for the ESBWR plant is similar to ABWR.

However, the total steam flow rate of the ESBWR plant is different from past designs. These differences warrant a detailed vibration analysis and test monitoring to assure the adequacy of the new design to withstand the FIV.

In the ESBWR initial plant FIV test program of the steam dryer assembly, accelerometers were located on the cover plate and several locations on the skirt, and strain gages were located directly on the skirt, drain channels and hoods (Reference 3L-5). In addition, pressure sensors were used to measure the pressure differentials between the inside and outside of the hood and skirt. The differential pressure fluctuation across the hoods is the primary forcing function causing vibration of the upper part of the steam dryer structure. The differential pressure fluctuation across the skirt is the primary forcing function causing the vibration of the lower part of the steam dryer structure.

A dynamic finite element model of the steam dryer assembly is developed using the ANSYS computer code (References 3L-3 and 3L-6). Due to the complicated geometry and the large size of the analytical model, major components may be modeled with coarse meshes such that their dynamic contributions are accounted for in the whole steam dryer assembly vibration responses. Separate refined dynamic finite element models of the major components are then developed to provide a high resolution of the component's response calculation.

The structural material properties and density for the steam dryer components at temperature are used in the model. The effect of the water on the dynamic responses is accounted for by explicitly modeling the dynamic properties of the fluid in the submerged portions of the skirt, drain channels, and the base ring.

Prior analytical models have predicted that the vibration modes are closely spaced.

3L.5.5.1.4 Standby Liquid Control Lines

There are two SLC pipes that enter the reactor vessel and are routed to the shroud. To accurately predict the vibration characteristic of the SLC line, a dynamic finite element model of the entire line is developed . In the model, the ends of the line are fixed anchor points since the lines are welded at the vessel nozzle and the shroud attachment points. The SLC line is supported at six places. The top vertical segment is supported at the RPV at two places along its length; the horizontal circular segment is supported by two symmetrically placed supports at the shroud; and the two vertical segments in the bottom length are supported at the shroud by one support in each segment.

3L.5.5.2 Stress Evaluation

Table 3L-7 lists the methods that are used for each instrumented component for the FIV test program. Evaluation of all internals except the steam dryer is contained in this subsection, steam dryer structural evaluation is contained in Subsection 3L.5.5.3. For this section, Method I is used for components that have many closely spaced natural vibration modes and utilizes the strain energy weighting method applied to all modes over the frequency range of interest. This method has previously been applied to the ABWR prototype plant startup tests of In-core Monitor housings, and shroud. Method II is similar to Method I, except that it is applied to two frequency bands, 0-100 Hz and 100-200 Hz. Method III is used for components that have relatively few, distinct dominant natural modes that are matched to the analytical modes. This method has previously been applied to the in-core guide tubes.

Maximum stress amplitude values for evaluation against allowable limits are determined from the test data and finite element models using one of three different evaluation methods. The method used for a particular component depends on the complexity of that component's vibration characteristics. Each of these methods yield conservatively high predictions of the maximum stress anywhere on the structure. These conservatively high stress predictions are compared against conservatively low acceptance criteria to assure that none of the components is experiencing high stress vibrations that might cause fatigue failures. The acceptable fatigue limit stress amplitude for the reactor internals component material [68.9 MPa (10,000 psi)], with the exception of the steam dryer.

Method I is used for components that have many closely spaced vibration frequencies and/or closely spaced natural vibration modes distributed over a relatively narrow frequency range. The

method utilizes a strain energy weighting method applied to all modes over the entire frequency range. It is applied by determining the maximum peak-to-peak (p-p) amplitude from an unfiltered time history segment. This maximum value is multiplied by a combined shape factor (derived from the strain energy weighting method) and stress concentration factors (SCFs) to yield the maximum stress value that could be expected to be found anywhere on the structure. This value is then compared against the acceptable fatigue limit stress amplitude for the component and material.

Method II is used for components that have many closely spaced vibration frequencies and/or closely spaced natural vibration modes that are unevenly distributed over several frequency ranges. The method is very similar to Method I, except that it is applied over several separate frequency bands. The maximum stress amplitude values for each frequency band are then added together absolutely to yield a conservatively high value for the overall maximum stress amplitude that could be found anywhere on the structure. This value is then compared against the acceptable fatigue limit stress amplitude for the component and material.

Method III is used for components that have relatively few, distinct dominant natural modes that can be easily identified and matched to the modes predicted by the finite element models. This method utilizes a mode shape factor for each vibration mode that relates the stress at the sensor location to the stress at the maximum stress location for that mode. Appropriate SCFs are also considered in this process. Response spectra are generated from the sensor output, from which the equivalent maximum p-p strain amplitude for each mode can be determined. The mode shape and SCFs are applied mode by mode to determine the maximum stress amplitude associated with each mode. Then the maximum stress amplitudes from each of the modes are added together absolutely to yield a conservatively high maximum overall stress amplitude for the structure. This value is then compared against the acceptable fatigue limit stress amplitude for the component and material.

These methods have identical initial steps to obtain mode shape factors for each natural mode. The steps for these methods are as follows. (Note: The evaluation method described here relates to strain gages. Similar steps are used for accelerometers used in their displacement mode. The example assumes a maximum allowable stress amplitude for the material of [68.9 MPa (10,000 psi)] for the purposes of illustration):

(1) The dynamic finite element model of each instrumented component is used to predict the natural vibration modal displacement, frequency and stress for each vibration response mode. Specifically, the computer model provides the following results for each mode:

ω_i = Natural frequency for vibration mode i

$\{\phi\}_i$ = Mass normalized displacement mode shape for vibration mode i.

(Normalized such that the generalized mass, $\{\phi\}_i^T[M]\{\phi\}_i$, is unity, where [M] is the mass matrix.)

$\{\sigma\}_i$ = Normalized stress distribution for vibration mode i.
(The stress corresponding to the mass normalized mode shape, $\{\phi\}_i$)

The theory and methods for calculation of these parameters may be found in text books on the subject of basic vibration analysis, such as Reference 3L-4.

(2) For each vibration mode, SCFs are applied at weld locations and regions with high stress gradient. From this information, the maximum stress intensity location and value is determined for each vibration mode.

$$\sigma_{i,\max} = Max\{SCF_i \cdot \sigma_i\} \text{ considered over the entire structure}$$

where

SCF_i = Stress concentration factor at some location

σ_i = Normalized stress intensity at the same location

$\sigma_{i,max}$ = Normalized maximum stress intensity for mode i

(3) From the stress distribution of Step 1, a mode shape factor is derived relating the stress at the sensor to the stress at the maximum stress location as determined in Step 2:

$$MSF_i = \frac{\sigma_i \text{(at maximum stress intensity location)}}{\sigma_{i,sensor}}$$

where

MSF_i = Mode shape factor

$\sigma_{i,sensor}$ = Normalized stress at sensor location for vibration mode i

(4) The mode shape factor from Step 3 and the maximum allowable stress amplitude for the material [68.9 MPa (10,000 psi)] are used to determine the maximum allowable stress value at the sensor location for each mode.

$$\sigma_{i,sensor,allowed} = \frac{68.9\ MPa}{(MSF_i)\cdot(SCF_i)}$$

where

$\sigma_{i,sensor,allowed}$ = Maximum allowed zero to peak stress amplitude at sensor location for vibration mode i (stress amplitude at sensor when maximum stress amplitude in structure is 68.9 MPa)

(5) The allowable strain for mode i ($\varepsilon_{i,allowed}$) is then calculated from this maximum allowed stress amplitude at the sensor location:

$$\varepsilon_{i,allowed} = \frac{\sigma_{i,sensor,allowed}}{E}$$

where

E = Young's modulus [e.g., 1.862×10^5 MPa (27.0×10^6 psi) at 160°C]

This equation is for uniaxial stress components.

At this point, Methods I and II diverge from Method III.

3L.5.5.2.1 Methods I and II

The next two steps are identical for Methods I and II.

(6) A weighting factor is determined by the strain energy method, which begins by obtaining the solution to the following equation based on the expected forcing function:

$$\{U\} = q_1\{\phi\}_1 + q_2\{\phi\}_2 + \ldots = \sum_{i=1}^{N} q_i\{\phi\}_i$$

where

$\{U\}$ = A vector representing the displacement response of the structure when subjected to the expected forcing function shape. This displacement response to an input forcing function is calculated from the finite element model on the computer.

$\{\phi\}_i$ = Mass normalized mode shape for vibration mode i. Mode shapes were determined from the modal analysis of the finite element model on the computer. The modes shapes are normalized such that the generalized mass, $\{\phi\}_i^T[M]\{\phi\}_i$, is unity (where [M] is the mass matrix).

q_i = Mode i response, dependent on load distribution. These coefficients are calculated from the previously calculated $\{U\}$ and $\{\phi\}_i$ using formulas derived from the generalized Fourier Theorem.

This is an application of the generalized Fourier Theorem, which establishes that a displacement function such as $\{U\}$ can be represented by a linear sum of the eigenfunctions, $\{\phi\}_i$. The theory and methods for calculation of these coefficients may be found in text books on the subject of basic vibration analysis, such as Reference 3L-4.

(7) The strain energy contribution, e_i, for each mode is then calculated:

$$e_i = \frac{1}{2} \cdot q_i^2 \cdot \{\phi\}_i^T \cdot [K] \cdot \{\phi\}_i$$

where

[K] = The structural stiffness matrix (For a more detailed explanation of the theory and calculation methods, see text books on the subject vibration analysis, such as Reference 3L-4.)

(8) This step is similar for both Methods I and II, the only difference being that Method I includes the entire frequency range in one group, while Method II uses several groups of frequency ranges. Then the strain energy weighted allowable strain vibration amplitude is calculated over a given frequency range by combining the weighted strain allowable values for each mode as follows:

For

$$\omega_I < \omega_1, \omega_2, \ldots, \omega_n \le \omega_{II}$$

$$\varepsilon_{II,allowed} = \frac{e_1 \cdot \varepsilon_{1,allowed} + e_2 \cdot \varepsilon_{2,allowed} + \ldots + e_n \cdot \varepsilon_{n,allowed}}{e_1 + e_2 + \ldots + e_n}$$

where

$\varepsilon_{II,allowed}$ = Allowable strain value between ω_I and ω_{II}, which includes the SCF

It should be noted that this step conservatively assumes that the peak stress of each mode occurs at the same physical location on the structure. In reality, the maximum stress locations for different modes may occur at different locations. Since the purpose of this calculation is just to confirm that the maximum stress is less than an acceptable limit, it is quite acceptable to add this conservatism. However, it should be understood that the value calculated is conservatively high, and it is not an accurate prediction of the actual stress amplitude. If a stress calculated in this manner should exceed the limit in a few situations, then a less conservative calculation can be used in those few cases.

The strain value in the above equation is the allowable strain used during the actual execution of the test. It represents the strain level at the sensor location when the maximum stress on the structure is 68.9 MPa (10,000 psi).

(9) Step 9 is the same for both Methods I and II, except that it is applied to each of the multiple frequency ranges associated with Method II; whereas, Method I is only for one frequency range. The combined shape factor is derived to relate the maximum zero-to-peak strain value measured at the sensor location to the corresponding maximum zero-to-peak stress intensity value on the structure.

$$\sigma_{II,\max} = \frac{\varepsilon_{II,measured,\max}}{\varepsilon_{II,allowed}} \cdot (68.9\ MPa) = \varepsilon_{II,measured,\max} \cdot CSF$$

where

$CSF = \dfrac{(68.9\ MPa)}{\varepsilon_{II,allowed}}$ = Combined Shape Factor with the SCF included.

$\sigma_{II,max}$ = Maximum zero-to-peak stress value anywhere on the structure for modes within the frequency range of ω_I to ω_{II}.

$\varepsilon_{II,measured,max}$ = Maximum measured zero-to-peak strain (one-half of maximum measured peak-to-peak) from time history of sensor band pass filtered over the frequency range ω_I to ω_{II}.

This is the maximum zero-to-peak stress value anywhere on the structure as determined by Method I. For Method I, this value is compared to 68.9 MPa (10,000 psi) for determination of acceptability.

(10) One additional step remains for Method II. The maximum stress values for each frequency band are added together absolutely to determine the overall maximum stress on the structure for comparison to the 68.9 MPa (10,000 psi) limit for the material.

$$\sigma_{MAX} = \sigma_{II,\max} + \sigma_{III,\max} + \ldots + \sigma_{N,\max}$$

where

σ_{MAX} = Maximum overall zero-to-peak stress anywhere on structure as determined by Method II.

$\sigma_{N,max}$ = Maximum zero-to-peak stress anywhere on structure within the frequency range of ω_{N-1} to ω_N (N-1 frequency ranges total).

σ_{MAX} is compared to the 68.9 MPa (10,000 psi) limit in order to determine acceptability under Method II.

It should be noted that this step conservatively assumes that the peak stress of each mode occurs at the same time. In reality, the maximum stress occurs at different times. Since the purpose of this calculation is just to confirm that the maximum stress is less than an acceptable limit, it is quite acceptable to add this conservatism. However, it should be understood that the value calculated is conservatively high, and it is not an accurate prediction of the actual stress amplitude. If a stress calculated in this manner should exceed the limit in a few situations, then a less conservative calculation can be used in those few cases.

3L.5.5.2.2 Method III

Method III uses the mode shape factor from Step 3, the SCF and the measured strain value to determine the maximum stress amplitude anywhere on the structure for each natural mode. Picking up after Step 5 from Subsection 3L.5.5.2:

(1) Maximum stress in the structure is calculated from the measured strain value at the sensor location.

$$\sigma_{i,MAX} = \varepsilon_{i,measured,\max} \cdot E \cdot MSF_i \cdot SCF_i$$

where

$\sigma_{i,MAX}$ = Maximum zero-to-peak stress anywhere on structure for mode i.

$\varepsilon_{i,measured,max}$ = Maximum zero-to-peak strain for mode i as determined from power spectrum from sensor signal.

E = Young's Modulus

MSF_i = Mode Shape Factor for mode i.

SCF_i = Stress Concentration Factor as applicable for maximum stress location for mode i.

(2) The maximum stress values for each mode are added together absolutely to determine the overall maximum stress on the structure for comparison to the 68.9 MPa (10,000 psi) limit for the material.

$$\sigma_{MAX} = \sigma_{1,MAX} + \sigma_{2,MAX} + ... + \sigma_{n,MAX}$$

where

σ_{MAX} = Maximum overall zero-to-peak stress anywhere on structure as determined by Method III.

$\sigma_{i,MAX}$ = Maximum zero-to-peak stress anywhere on structure for mode i (n total dominant modes).

σ_{MAX} is compared to the 68.9 MPa (10,000 psi) limit in order to determine acceptability under Method III.

It should be noted that this step conservatively assumes that the peak stress of each mode occurs at the same physical location on the structure and at the same time. In reality, the maximum stress locations for different modes may occur at different locations and at different times. Since the purpose of this calculation is just to confirm that the maximum stress is less than an acceptable limit, it is quite acceptable to add these conservatisms. However, it should be understood that the value calculated is conservatively high, and it is not an accurate prediction of the actual stress amplitude. If a stress calculated in this manner should exceed the limit in a few situations, then a less conservative calculation can be used in those few cases.

In summary, all three methods involve two significant conservatisms:

- The assumption of the maximum stresses occurring at the same location in a component, and
- The assumption that the maximum stresses for different modes occur at the same time.

Inclusion of these two significant conservatisms results in significantly higher calculated stresses.

3L.5.5.3 Stress Evaluation Steam Dryer

The structural analysis performed for the steam dryer design consists of a dynamic FEA. To address the uncertainty in the structural natural frequencies, the load definition frequencies are varied over a range of ±10% of nominal in 2.5% steps (nine cases total).

Similar to Subsection 3L.5.5.2, Step 5, for one-dimensional (uni-axial) structural responses and with the strain gage located at the maximum stress location in the steam dryer, the determination of strain measurement acceptance criteria would be:

$$\varepsilon = \sigma / (E)$$

where

σ = peak stress intensity allowable limit

E = Young;s Modulus, 178 MPa (25.8 x 10^6 psi) at 288°C (550°F) for steam dryer material.

With a peak stress intensity allowable limit of 93.8 MPa (13,600 psi), the strain acceptance limit with the strain gage at the maximum stress location, is calculated as follows:

$\varepsilon = \sigma/(E) = 527\ \mu\varepsilon$ (zero-peak) or $1054\ \mu\varepsilon$ (peak-peak)

For the steam dryer, the structural responses are multi-dimensional (multi-axial), and the strain gages are not necessarily located at the maximum stress location since the maximum stress location predicted from the stress analysis may be in locations where it is not practical nor possible to install the strain gages or accelerometers (steam dryer interior location).

There are two methods used to assess the instrument acceptance criteria for the strain gauges and accelerometers based on the structural analysis results:

(1) Minimum load case method. In this method the minimum strain or accelerometer limit for the nine load cases is found and then reduced with respect to the instrument's uncertainty.

(2) Uncertainty assessment method. For each of the nine load cases, predicted strain and accelerometer values are determined that include location tolerance, and the instrument's

measurement uncertainty. The mean and mean standard deviation of the predicted readings at each monitoring locations are calculated. The instrument limit is then based on the mean minus the standard deviation.

The most limiting strain and acceleration values from both the minimum load method case and the uncertainty assessment methods are used for the acceptance limits. The following procedure is followed in the minimum load case method:

(1) For each of the nine load cases, calculate the peak stress on the steam dryer to determine the minimum factor to the ASME B&PV code Section III, Appendix I, Figure I-9.2.2, Curve C endurance limit for the highest stress components. For the outer hood components above the skirt, the "minimum factor" is calculated by dividing 74.5 MPa (10,800 psi), 80% of the endurance limit, by the steam dryer peak stress for the load case. For the balance of the components, the "minimum factor" is calculated by dividing 93.8 MPa (13,600 psi), by the steam dryer peak stress for the load case.

(2) For each of the nine load cases, calculate the maximum absolute value of the predicted strain at each of the strain gage locations. Two times the maximum strain is used as the peak-to-peak response. (This is consistent with the stress analysis where the peak stress intensity is used as ½ the peak alternating stress.) An equivalent assessment is performed for accelerometers based on the predicted acceleration at that location.

(3) For each of the nine load cases, take the product of the "minimum factor" (Step 1) times the maximum absolute value of strain at each of the strain gage locations (Step 2). An equivalent calculation is performed for the accelerometers.

(4) For each of the strain gages and the accelerometer locations, determine the minimum value of strain and acceleration from the nine load cases.

(5) The Level 1 strain limit is calculated by reducing the minimum strain and acceleration values calculated in Step 4 by the uncertainty in the overall measurement accuracy (M_u). Therefore, the minimum strain values were factored by (100% - (M_u)%) to determine the strain limit.

For the uncertainty assessment method, there were three key parameters that may impact the strain and acceleration limits:

(1) Location tolerance for mounting the strain gages and the accelerometers.

(2) Finite element model uncertainty in predicting the correct response at the mounting location.

(3) The strain and acceleration measurement uncertainties.

The physical location tolerance for the strain gages and accelerometers is determined. Where possible the instrument mounting locations are selected as potential areas of high response magnitude and low gradient. For the uncertainty assessment a population of strain or accelerometer predictions at each monitoring location are used; the specified locations and the predictions at 4 points with tolerance from the specified location.

The strain gauge and accelerometer locations were selected away from discontinuities such as welds, changes of thickness, and junctions between components. In the structural assessment, stresses at and near discontinuities were bounded using conservative SCFs. For monitoring the

structural response, however, the instruments are located where the model most accurately predicts the strain and acceleration response and away from regions with high gradients where a small change in sensor location results in a large change in the measured response.

In areas away from discontinuities, the major contribution for prediction uncertainty from the structural model will be due to variations in the frequency response resulting from material tolerances and the steam dryer fabrication. The frequency response uncertainty is addressed by the varying time step analyses. This included nine load cases that replicate frequency response variation of 0%, ±2.5%, ±5%, ±7.5%, ±10%. For this uncertainty assessment the evaluation assumes the response predictions for each of the 9 cases had equal probility of occurrence. Therefore for each instrument locations there were 45 prredictions; 5 locations and 9 load cases.

The instrument loop uncertainty is used in this assessment. This bounds the strain gage and accelerometer loop uncertainties for the instruments and data acquisition equipment to be used during testing. This uncertainty was then combined with the standard deviation of the 45 predictions by the square root sum of the squares (SRSS) method. The acceptance limit was then defined as the SRSS of the standard deviation of the prediction and the measument uncertainty.

The fatigue analysis performed for the ESBWR steam dryer will use a fatigue limit stress amplitude of 93.8 MPa (13,600 psi). For all critical locations, including the outer bank hood component, which are subjected to higher pressure loading in the region of the main steamlines, the fatigue stress amplitude limit is 74.5 MPa (10,800 psi). The limit is justified because the steam dryer is a nonsafety-related component, performs no safety-related fuctions, and is only required to maintain its structural integrity (no loose parts generated) for normal, transient and accident conditions.

3L.6 REFERENCES

3L-1 General Electric Company, "ESBWR Reactor Internals Flow Induced Vibration Program", NEDE-33259P, Revision 1, Class III (Proprietary), December 2007, and NEDO-33259, Class I (Non-proprietary), December 2007.

3L-2 General Electric Company, "BWR Steam Dryer Integrity", SIL 644 Revision 2, August 30, 2006.

3L-3 ANSYS Engineering Analysis System User's Manual, applicable revision.

3L-4 Elements of Vibration Analysis, Leonard Meirovitch, McGraw Hill Book Co., 1975.

3L-5 General Electric Company, "Steam Dryer - Acoustic Load Definition," NEDE-33312P, Class III (Proprietary), November 2007, and NEDO-33312, Class I (Non-Proprietary), November 2007.

3L-6 General Electric Company, "Steam Dryer - Structural Evaluation," NEDE-33313P, Class III (Proprietary), November 2007, and NEDO-33313, Class I (Non-Proprietary), November 2007.

3L-7 (Deleted)

3L-8 General Electric Company, "ESBWR Steam Dryer – Plant Based Load Evaluation Methodology," NEDC-33408P, Class III (Proprietary), February 2008, and NEDO-33408, Class I (Non-proprietary), February 2008.

Table 3L-1

Comparison of Typical Major Steam Dryer Configuration Parameters

Steam Dryer Configuration Parameter	ESBWR	ABWR	Replacement BWR/3
Number of Banks	6	6	6
Active height (flow area) for vane modules	1918 mm ($65.6\ m^2$)	1848 mm ($58.8\ m^2$)	1852 mm ($54.3\ m^2$)
Approximate weight	55,400 Kg	50,000 kg	45,545 Kg
Outside diameter of upper support ring	6920 mm	6808 mm	6096 mm
Overall height	5334 mm	5226 mm	4979 mm
Length of skirt	2668 mm	2731 mm	2432 mm
Skirt thickness	9.65 mm	7 mm	9.65 mm
Cover plate thickness	12.7 mm	16 mm	12.7 mm
Hood thickness	19 mm (outer bank) 12.7 mm (inner banks)	16 mm (outer bank) 8 mm (inner banks)	25.4 mm (outer bank) 12.7 mm (inner banks)
(Deleted)			
Average steamline flow velocity	47 m/s	46 m/s	62 m/s

Table 3L-2

Specific Steam Dryer Load Definition Legend

Normal (N)	Normal and/or abnormal loads associated with the system operating conditions, including thermal loads, depending on acceptance criteria. These include deadweight, static differential pressure, and fluctuating pressure loads.
TSV	Turbine stop valve closure induced loads in the main steam piping and components integral to or mounted thereon. For the steam dryer, these include acoustic and flow impact loads. Separate load cases are evaluated for load components that are separated in time (e.g., acoustic impact and flow impact).
LOCA8	Acoustic impact loads on the steam dryer due to a postulated steamline break. Separate load cases are evaluated for load components that are separated in time (e.g., acoustic impact and level swell impact).
LOCA9	Level swell impact loads on the steam dryer due to a postulated steamline break. Separate load cases are evaluated for load components that are separated in time (e.g., acoustic impact and level swell impact).

Table 3L-3

Typical Vibration Sensors

Vibration sensor type	Typical sensor model
Strain gauge	Kyowa Model KHC-10-120-G9
Accelerometer	Vibro-meter Model CA901
Dynamic pressure transducer	Vibro-meter Model CP104 and/or Model CP211

Table 3L-4

Sensor Locations and Types

Equipment Item	Location on Equipment	Sensor Type	Location Basis
Steam Dryer Support Ring	On top of support	Accelerometer (Acceleration Mode)	Past experience of steam dryer rocking
Steam Dryer Skirt	At bottom of steam dryer	Accelerometer (Displacement Mode)	Modal analysis
Steam Dryer Hood	Dryer bank hood and end plate	Strain Gage Pressure Transducer	Past experience of cracks at weld & to obtain forcing function data if problem occurs
Steam Dryer Drain Channel	At top & bottom, side edge of drain channels	Strain Gage	Modal analysis Past experience of cracks at weld
Steam Dryer Skirt	At top & bottom of skirt.	Strain Gage Pressure Transducer	Modal analysis & to obtain forcing function data if problem occurs
Shroud	On the outside diameter near shroud bottom at maximum stress location	Strain Gage	Dynamic analysis
Separator Top	On the guide ring	Accelerometer	Past experience to measure separator motion
Vessel Dome Region	On steam dryer FIV instrument post.	Pressure Transducer	To obtain forcing function data if problem occurs
Chimney	On the middle of chimney at 4 different azimuths	Accelerometer	To obtain data on new design chimney vibration
Standby Liquid Control Line	Strain gages on the shroud penetration piping at the bottom along the principal stress directions Accelerometer near the end of the circular header to measure radial and tangential accelerations	Strain Gage and accelerometers	New design and dynamic analysis

1. Vibration data for all equipment listed in Table 3L-4 will be acquired during initial startup and power ascension testing. Pressure data, however, while recorded during startup testing, will not be evaluated in detail unless the primary vibration measurements indicate the need for further assessment.

Table 3L-5

Applicable Data Reduction Method for Comparison to Criteria

Component	Sensor Type	Applicable Data Reduction Method	Frequency Bandwidth (Hz)[1]
Shroud	Strain Gages	Time History	0-100
Steam Dryer Skirt	Strain Gages	Time History	0-100
Steam Dryer Skirt	Accelerometer (Displacement)	Time History	0-100
Steam Dryer Drain Channels	Strain Gauges	Time History	0-100, 100-200
Steam Dryer Hoods	Strain Gages	Time History	0-100, 100-200
Steam Dryer Support Ring	Accelerometer	Time History	0-1600 0-80, 80-200
Separator Top	Accelerometer	Time History	0-100
Chimney	Accelerometer	Time History	0-200
Standby Liquid Control Lines	Strain Gages, Accelerometer	Time History	0-100

Notes

1. It should be noted that the 200 Hz frequency range is approximate and is dependent on the SRV standpipe design. The frequency range monitored and evaluated in the FIV test program is adjusted to bound the range of frequencies determined for the final SRV standpipe design.
2. Pressure sensors data reduction from steam dome, steam dryer skirt, and steam dryer hood are not included in this table. The pressure data from these components and the main steamlines are discussed in Subsection 3L.4.6.
3. For Method III, the spectrum method may be used in placed of the Time History Method in cases with sufficient margin.

Table 3L-6

Parameters Used in Spectrum Generation

Parameter	Value
Bandwidth	0-200 Hz*
Time length	3 minutes
No. of Fourier Lines	400
Resolution	0.5 Hz
Window	Flat Top
No. of averages	90
Overlap	0%
Noise reduction	None
Average Type	Peak-hold
P-P Value	= RMS x 6

* It should be noted that the 200 Hz frequency range is approximate and is dependent on the SRV standpipe design. The frequency range monitored and evaluated in the FIV test program is adjusted to bound the range of frequencies determined for the final SRV standpipe design.

Table 3L-7

Data Evaluation Methods to be Used for Each Component

Internal Component	Data Evaluation Method Used
Shroud and Chimney	I
Steam Dryer	See Subsection 3L.5.5.3
Standby Liquid Control Line	III

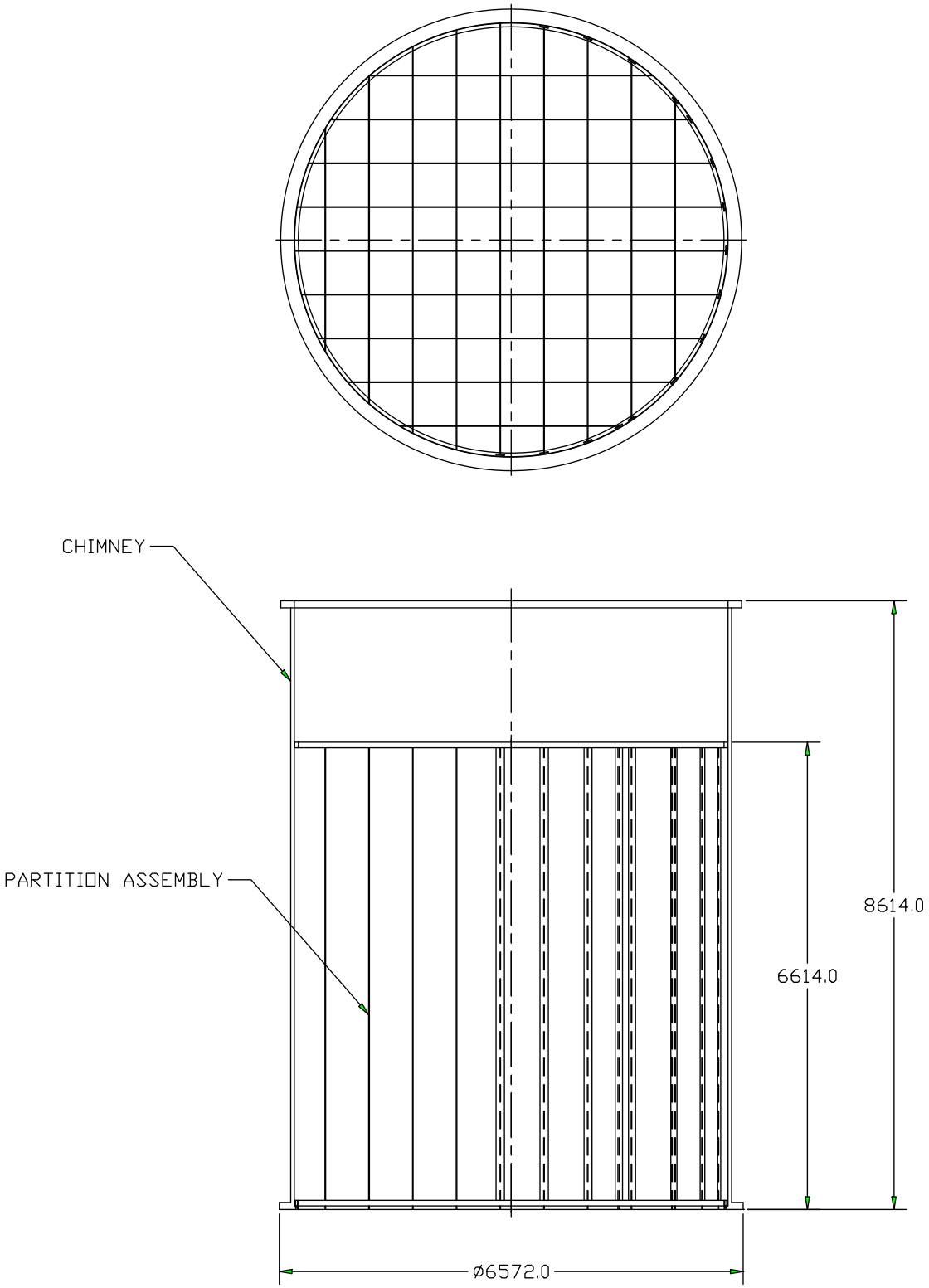

Figure 3L-1. Typical Chimney Assembly

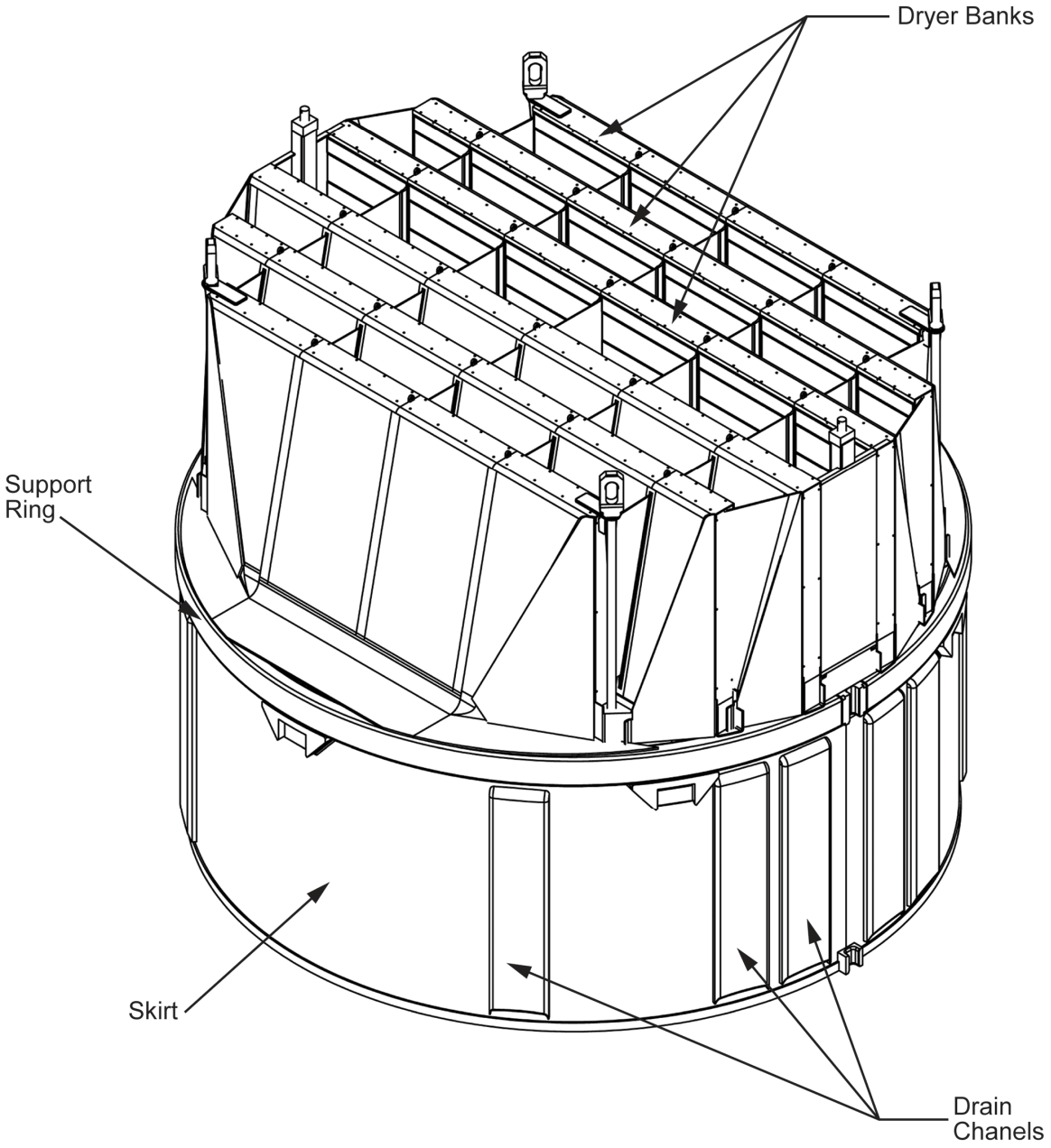

Figure 3L-2. Typical Steam Dryer Assembly