GE Hitachi Nuclear Energy

26A6641AB
Revision 5
May 2008

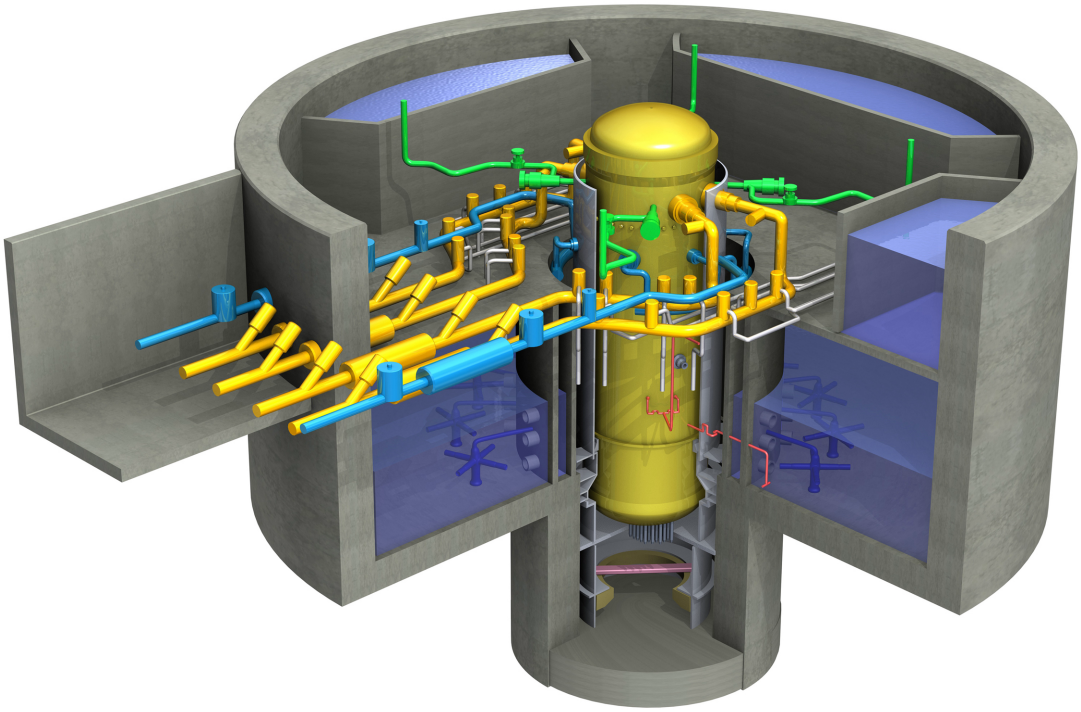

ESBWR Design Control Document

Tier 1

Contents

1. Introduction 1.1-1
1.1 Definitions and General Provisions 1.1-1
1.1.1 Definitions 1.1-1
1.1.2 General Provisions 1.1-5
1.1.2.1 Treatment of Individual Items 1.1-5
1.1.2.2 Implementation of ITAAC 1.1-5
1.1.2.3 Discussion of Matters Related to Operations 1.1-6
1.1.2.4 Interpretation of Figures 1.1-6
1.1.2.5 Rated Reactor Core Thermal Power 1.1-7
1.2 Figure Legend 1.2-9
2. Design Descriptions And ITAAC 1.2-1
2.1 Nuclear Steam Supply 2.1-1
2.1.1 Reactor Pressure Vessel System 2.1-1
2.1.2 Nuclear Boiler System 2.1-12
2.2 Instrumentation and Control Systems 2.2-1
2.2.1 Rod Control and Information System 2.2-1
2.2.2 Control Rod Drive System 2.2-15
2.2.3 Feedwater Control System 2.2-34
2.2.4 Standby Liquid Control System 2.2-40
2.2.5 Neutron Monitoring System 2.2-66
2.2.6 Remote Shutdown System 2.2-73
2.2.7 Reactor Protection System 2.2-77
2.2.8 Plant Automation System 2.2-83
2.2.9 Steam Bypass and Pressure Control System 2.2-84
2.2.10 Safety-Related Distributed Control and Information System 2.2-87
2.2.11 Nonsafety-Related Distributed Control and Information System 2.2-89
2.2.12 Leak Detection and Isolation System 2.2-91
2.2.13 Engineered Safety Features Safety System Logic and Control 2.2-102
2.2.14 Diverse Instrumentation and Control Systems 2.2-108
2.2.15 Instrumentation & Control Compliance With IEEE Std. 603 ..... 2.2-118
2.3 Radiation Monitoring Systems 2.3-1
2.3.1 Process Radiation Monitoring System 2.3-1
2.3.2 Area Radiation Monitoring System 2.3-12
2.4 Core Cooling Systems Used For Abnormal Events 2.4-1
2.4.1 Isolation Condenser System 2.4-1
2.4.2 Emergency Core Cooling System - Gravity-Driven Cooling System 2.4-33
2.5 Reactor Servicing Equipment 2.5-1
2.5.1 Fuel Servicing Equipment 2.5-1
2.5.2 Miscellaneous Servicing Equipment 2.5-2
2.5.3 Reactor Pressure Vessel Servicing Equipment 2.5-3
2.5.4 RPV Internals Servicing Equipment 2.5-4
2.5.5 Refueling Equipment 2.5-5
2.5.6 Fuel Storage Facility 2.5-9
2.5.7 Under-Vessel Servicing Equipment 2.5-11
2.5.8 FMCRD Maintenance Area 2.5-12
2.5.9 Fuel Cask Cleaning 2.5-13
2.5.10 Fuel Transfer System 2.5-14
2.5.11 (Deleted) 2.5-18

2.5.12 (Deleted) 2.5-19
2.6 Reactor And Containment Auxiliary Systems 2.6-1
2.6.1 Reactor Water Cleanup/Shutdown Cooling System 2.6-1
2.6.2 Fuel And Auxiliary Pools Cooling System 2.6-16
2.7 Control Panels 2.7-1
2.7.1 Main Control Room Panels 2.7-1
2.7.2 Radioactive Waste Control Panels 2.7-4
2.7.3 Local Control Panels And Racks 2.7-5
2.8 (DELETED) 2.8-1
2.8.1 (Deleted) 2.8-1
2.8.2 (DELETED 2.8-2
2.9 (Deleted) 2.9-1
2.10 Radioactive Waste Management System 2.10-1
2.10.1 Liquid Waste Management System 2.10-1
2.10.2 Solid Waste Management System 2.10-5
2.10.3 Gaseous Waste Management System 2.10-8
2.11 Power Cycle 2.11-1
2.11.1 Turbine Main Steam System 2.11-1
2.11.2 Condensate and Feedwater System 2.11-8
2.11.3 Condensate Purification System 2.11-11
2.11.4 Main Turbine System 2.11-12
2.11.5 Turbine Gland Seal System 2.11-16
2.11.6 Turbine Bypass System 2.11-19
2.11.7 Main Condenser 2.11-22
2.11.8 Circulating Water System 2.11-24
2.11.9 Power Cycle Auxiliary Systems 2.11-25
2.12 Auxiliary Systems 2.12-1
2.12.1 Makeup Water System 2.12-1
2.12.2 Condensate Storage and Transfer System 2.12-3
2.12.3 Reactor Component Cooling Water System 2.12-4
2.12.4 Turbine Component Cooling Water System 2.12-7
2.12.5 Chilled Water System 2.12-8
2.12.6 Oxygen Injection System 2.12-11
2.12.7 Plant Service Water System 2.12-12
2.12.8 Service Air System 2.12-15
2.12.9 Instrument Air System 2.12-17
2.12.10 High Pressure Nitrogen Supply System 2.12-18
2.12.11 Auxiliary Boiler System 2.12-20
2.12.12 Potable Water System 2.12-21
2.12.13 Hydrogen Water Chemistry System 2.12-22
2.12.14 Process Sampling System 2.12-23
2.12.15 Zinc Injection System 2.12-24
2.12.16 Freeze Protection 2.12-25
2.12.17 Station Water System 2.12-26
2.13 Electrical Systems 2.13-1
2.13.1 Onsite AC Power System 2.13-1
2.13.2 Deleted 2.13-11
2.13.3 Direct Current Power Supply 2.13-12
2.13.4 Onsite Diesel Generator Power Supply Systems 2.13-26
2.13.5 Uninterruptible AC Power Supply 2.13-33
2.13.6 (Deleted) 2.13-42

2.13.7 Communication System 2.13-43
2.13.8 Lighting Power Supply 2.13-45
2.14 Power Transmission 2.14-1
2.15 Containment, Cooling and Environmental Control Systems....2.15-1
2.15.1 Containment System 2.15-1
2.15.2 Containment Vessel 2.15-35
2.15.3 Containment Internal Structures 2.15-36
2.15.4 Passive Containment Cooling System 2.15-41
2.15.5 Containment Inerting System 2.15-52
2.15.6 Drywell Cooling System....2.15-55
2.15.7 Containment Monitoring System....2.15-58
2.16 Structures and Servicing Systems/Equipment....2.16-1
2.16.1 Cranes, Hoists and Elevators 2.16-1
2.16.2 Heating, Ventilating and Air-Conditioning Systems 2.16-3
2.16.2.1 Reactor Building HVAC 2.16-3
2.16.2.2 Control Building HVAC System....2.16-4
2.16.2.3 Emergency Filter Units 2.16-5
2.16.2.4 Turbine Building HVAC System 2.16-6
2.16.2.5 Fuel Building HVAC System....2.16-7
2.16.2.6 Radwaste Building HVAC System 2.16-7
2.16.2.7 Electrical Building HVAC System....2.16-7
2.16.2.8 Other Building HVAC Systems 2.16-9
2.16.3 Fire Protection System....2.16-40
2.16.3.1 Fire Barriers....2.16-48
2.16.4 Equipment and Floor Drain System....2.16-50
2.16.5 Reactor Building 2.16-52
2.16.6 Control Building 2.16-76
2.16.7 Fuel Building 2.16-88
2.16.8 Turbine Building....2.16-100
2.16.9 Radwaste Building....2.16-101
2.16.10 Other Buildings and Structures....2.16-102
2.17 Intake Structure and Servicing Equipment....2.17-1
2.17.1 Intake and Discharge Structure....2.17-1
2.18 Yard Structures and Equipment....2.18-1
2.18.1 Oil Storage and Transfer Systems....2.18-1
2.18.2 Site Security....2.18-2
2.19 Plant Security System....2.19-1
3. Non-System Based Material 2.19-1
3.1 Design of piping systems and components 3.1-1
3.2 Software Development....3.2-1
3.3 Human Factors Engineering....3.3-1
3.4 Radiation Protection....3.4-1
3.5 Initial Test Program....3.5-1
3.6 Design Reliability Assurance Program 3.6-1
3.7 Post Accident Monitoring Instrumentation 3.7-1
3.8 Environmental Qualification of Mechanical and Electrical Equipment....3.8-1
4. Interface Material.... 3.8-1
4.1 Plant Service Water System 4.1-1
5. Site Parameters.... 4.1-1
5.1 Scope and Purpose....5.1-1

List of Tables

Table 2.1.1-1 Reactor Pressure Vessel System Mechanical Equipment 2.1-3
Table 2.1.1-2 Key Dimensions of RPV Components and Acceptable Variations..... 2.1-4
Table 2.1.1-3 ITAAC For Reactor Pressure Vessel System..... 2.1-5
Table 2.1.2-1 Nuclear Boiler System Mechanical Equipment 2.1-16
Table 2.1.2-2 Nuclear Boiler System Electrical Equipment..... 2.1-19
Table 2.1.2-3 ITAAC For The Nuclear Boiler System..... 2.1-21
Table 2.2.1-1 RC&IS Functional Arrangement..... 2.2-2
Table 2.2.1-2 RC&IS Major Functional Groups 2.2-3
Table 2.2.1-3 RC&IS Automatic Functions, Initiators, and Associated Interfacing Systems. 2.2-7
Table 2.2.1-4 RC&IS Rod Block Functions 2.2-9
Table 2.2.1-5 RC&IS Controls, Interlocks, and Bypasses..... 2.2-11
Table 2.2.1-6 ITAAC For Rod Control and Information System..... 2.2-12
Table 2.2.2-1 CRDS Functional Arrangement 2.2-17
Table 2.2.2-2 CRD Maximum Allowable Scram Times for Vessel Bottom Pressures Below 7.481 MPa gauge (1085 psig)..... 2.2-19
Table 2.2.2-3 CRD System Automatic Functions, Initiators, and Associated Interfacing Systems 2.2-20
Table 2.2.2-4 CRD System Controls and Interlocks..... 2.2-21
Table 2.2.2-5 Control Rod Drive System Mechanical Equipment 2.2-24
Table 2.2.2-6 Control Rod Drive System Electrical Equipment 2.2-25
Table 2.2.2-6 Control Rod Drive System Electrical Equipment 2.2-25
Table 2.2.2-7 ITAAC For Control Rod Drive System..... 2.2-26
Table 2.2.3-1 FWCS Functional Arrangment..... 2.2-35
Table 2.2.3-2 FWCS Automatic Functions, Initiators, and Associated Interfacing Systems 2.2-36
Table 2.2.3-3 FWCS Controls 2.2-37
Table 2.2.3-4 ITAAC For Feedwater Control System..... 2.2-38
Table 2.2.4-1 SLC System Functional Arrangement..... 2.2-43
Table 2.2.4-2 SLC System Automatic Functions, Initiators, and Associated Interfacing Systems 2.2-44
Table 2.2.4-3 SLC System Controls and Interlocks 2.2-45
Table 2.2.4-4 SLC System Mechanical Equipment..... 2.2-46
Table 2.2.4-5 SLC System Electrical Equipment 2.2-52
Table 2.2.4-6 ITAAC For The Standby Liquid Control System 2.2-56
Table 2.2.5-1 NMS Functional Arrangement 2.2-67
Table 2.2.5-2 NMS Functions, Initiators, and Associated Interfacing Systems 2.2-69
Table 2.2.5-3 NMS Controls, Interlocks, and Bypasses 2.2-70
Table 2.2.5-4 ITAAC For The Neutron Monitoring System 2.2-71
Table 2.2.6-1 RSS Functional arrangement..... 2.2-74
Table 2.2.6-2 RSS Controls 2.2-75
Table 2.2.6-3 ITAAC For The Remote Shutdown System..... 2.2-76
Table 2.2.7-1 RPS Functional Arrangement..... 2.2-78
Table 2.2.7-2 RPS Automatic Functions, Initiators, and Associated Interfacing Systems.... 2.2-79
Table 2.2.7-3 RPS Controls, Interlocks (System Interfaces), and Bypasses 2.2-80
Table 2.2.7-4 ITAAC For The Reactor Protection System 2.2-81

Table 2.2.9-1 SB&PC System Functional Arrangement 2.2-85
Table 2.2.9-2 SB&PC System Functions and Initiating Conditions 2.2-85
Table 2.2.9-3 ITAAC For The Steam Bypass and Pressure Control System 2.2-86
Table 2.2.10-1 Systems and Functions Comprising The Q-DCIS 2.2-88
Table 2.2.11-1 Systems and Functions Comprising The N-DCIS 2.2-90
Table 2.2.12-1 LD&IS Functional Arrangement 2.2-92
Table 2.2.12-2 LD&IS Isolation Function Monitored Variables 2.2-93
Table 2.2.12-3 LD&IS leakage Source Monitored Variables 2.2-96
Table 2.2.12-4 LD&IS Controls, Interlocks, and Bypasses 2.2-99
Table 2.2.12-5 ITAAC For Leak Detection and Isolation System 2.2-100
Table 2.2.13-1 SSLC/ESF Functional Arrangement 2.2-103
Table 2.2.13-2 SSLC/ESF Automatic Functions, Initiators, and Associated Interfacing Systems 2.2-104
Table 2.2.13-3 SSLC/ESF Controls, Interlocks, and Bypasses 2.2-105
Table 2.2.13-4 ITAAC For Safety System Logic and Control/ESF System 2.2-106
Table 2.2.14-1 DICS Functional Arrangement 2.2-109
Table 2.2.14-2 DICS Functions, Initiators, and Interfacing Systems [1] 2.2-110
Table 2.2.14-3 DICS Controls, Interlocks and Bypasses[3] 2.2-114
Table 2.2.14-4 ITAAC For Diverse Instrumentation and Controls 2.2-115
Table 2.2.15-1 ITAAC Applicability Matrix [(2)] 2.2-121
Table 2.2.15-2 ITAAC For IEEE Std. 603 Compliance Confirmation 2.2-123
Table 2.3.1-1 Process Radiation Monitors (Shown on Figure 2.3.1-1) 2.3-3
Table 2.3.1-2 ITAAC For The Process Radiation Monitoring System 2.3-7
Table 2.3.2-1 ARM Locations 2.3-13
Table 2.3.2-2 ITAAC For The Area Radiation Monitoring System 2.3-17
Table 2.4.1-1 ICS Mechanical Equipment 2.4-4
Table 2.4.1-2 ICS Electrical Equipment 2.4-12
Table 2.4.1-3 ITAAC For The Isolation Condenser System 2.4-19
Table 2.4.2-1 GDCS Mechanical Equipment 2.4-35
Table 2.4.2-2 Electrical Equipment 2.4-44
Table 2.4.2-3 ITAAC For The Gravity-Driven Cooling System 2.4-51
Table 2.5.5-1 ITAAC for Refueling Machine 2.5-6
Table 2.5.6-1 ITAAC For The Fuel Storage Racks (Spent and New) 2.5-10
Table 2.5.10-1 ITAAC For The Inclined Fuel Transfer System 2.5-15
Table 2.6.1-1 Reactor Water Cleanup/Shutdown Cooling System Mechanical Equipment ... 2.6-3
Table 2.6.1-2 ITAAC For The Reactor Water Cleanup/Shutdown Cooling System 2.6-8
Table 2.6.2-1 FAPCS Mechanical Equipment 2.6-18
Table 2.6.2-2 ITAAC For The Fuel and Auxiliary Pools Cooling Cleanup System 2.6-22
Table 2.7.1-1 ITAAC For Main Control Room Panels 2.7-2
Table 2.7.3-1 ITAAC For Local Control Panels and Instrument Racks 2.7-6
Table 2.10.1-1 Major Equipment in LWMS 2.10-2
Table 2.10.1-2 ITAAC For The Liquid Waste Management System 2.10-4
Table 2.10.2-1 SWMS Tanks Nominal Capacity (Volume) 2.10-6
Table 2.10.2-2 ITAAC For The Solid Waste Management System 2.10-7
Table 2.10.3-1 ITAAC For The Gaseous Waste Management System 2.10-9
Table 2.11.1-1 Turbine Main Steam System ITAAC 2.11-3

Table 2.11.2-1 Condensate and Feedwater System ITAAC 2.11-9
Table 2.11.4-1 ITAAC For The Main Turbine System 2.11-13
Table 2.11.5-1 Turbine Gland Seal System ITAAC 2.11-17
Table 2.11.6-1 ITAAC For The Turbine Bypass System 2.11-20
Table 2.11.7-1 ITAAC For The Main Condenser 2.11-23
Table 2.12.1-1 ITAAC For The Makeup Water System 2.12-2
Table 2.12.3-1 ITAAC For The Reactor Component Cooling Water System 2.12-5
Table 2.12.5-1 ITAAC For The Chilled Water System 2.12-9
Table 2.12.7-1 ITAAC For The Plant Service Water System 2.12-13
Table 2.12.8-1 ITAAC For The Service Air System 2.12-16
Table 2.12.10-1 ITAAC For The High Pressure Nitrogen Supply System 2.12-19
Table 2.13.1-1 System Equipment 2.13-2
Table 2.13.1-2 ITAAC For The Onsite AC Power System 2.13-5
Table 2.13.3-1 System Equipment 2.13-14
Table 2.13.3-2 Equipment Displays/Status Indication 2.13-17
Table 2.13.3-3 ITAAC For The Direct Current Power Supply 2.13-18
Table 2.13.4-1 Equipment Location 2.13-28
Table 2.13.4-2 ITAAC For The Onsite Diesel Generator Power Supply Systems 2.13-29
Table 2.13.5-1 System Equipment 2.13-34
Table 2.13.5-2 ITAAC For The Uninterruptible AC Power Supply 2.13-36
Table 2.13.7-1 Deleted 2.13-44
Table 2.13.8-1 ITAAC For The Lighting Power Supply 2.13-46
Table 2.15.1-1a Containment System Penetrations and Equipment 2.15-4
Table 2.15.1-1b Containment Mechanical Equipment 2.15-13
Table 2.15.1-1c Electrical Equipment 2.15-14
Table 2.15.1-1d Containment System Penetration Isolation Valve Closure Times 2.15-15
Table 2.15.1-2 ITAAC For The Containment System 2.15-20
Table 2.15.3-1 Containment Internal Structures Locations 2.15-37
Table 2.15.3-2 ITAAC For The Containment Internal Structure 2.15-38
Table 2.15.4-1 Passive Containment Cooling System Mechanical Equipment 2.15-43
Table 2.15.4-2 ITAAC For The Passive Containment Cooling System 2.15-44
Table 2.15.5-1 Containment Inerting System Electrical Equipment 2.15-53
Table 2.15.5-2 ITAAC For The Containment Inerting System 2.15-54
Table 2.15.6-1 Deleted 2.15-56
Table 2.15.6-2 Deleted 2.15-57
Table 2.15.7-1 Containment Monitoring System Electrical Equipment 2.15-60
Table 2.15.7-2 ITAAC For The Containment Monitoring System 2.15-63
Table 2.16.1-1 ITAAC For The Cranes, Hoists and Elevators 2.16-2
Table 2.16.2-1 Reactor Building HVAC System Safety-Related Components 2.16-10
Table 2.16.2-2 ITAAC For The Reactor Building HVAC 2.16-11
Table 2.16.2-3 Control Building HVAC System Safety-Related Components 2.16-15
Table 2.16.2-4 ITAAC For The Control Building Habitability HVAC Subsystem 2.16-16
Table 2.16.2-5 Emergency Filter Units 2.16-20
Table 2.16.2-6 ITAAC For Emergency Filter Units 2.16-21
Table 2.16.2-7 ITAAC For Turbine Building Ventilation System 2.16-25
Table 2.16.2-8 Fuel Building HVAC System Safety-Related Components 2.16-26

Table 2.16.2-9 ITAAC For The Fuel Building HVAC 2.16-27
Table 2.16.2-10 ITAAC For Electrical Building Ventilation System 2.16-29
Table 2.16.3-1 Fire Protection System Equipment 2.16-41
Table 2.16.3-2 ITAAC For The Fire Protection System 2.16-42
Table 2.16.3.1-1 ITAAC For Fire Barriers 2.16-49
Table 2.16.4-1 ITAAC For The Equipment and Floor Drain System 2.16-51
Table 2.16.5-1 Critical Dimensions of Reactor Building – Part 1 ..... 2.16-54
Table 2.16.5-1 Critical Dimensions of Reactor Building – Part 2 ..... 2.16-59
Table 2.16.5-2 ITAAC For The Reactor Building 2.16-60
Table 2.16.6-1 Critical Dimensions of Control Building – Part 1 ..... 2.16-77
Table 2.16.6-1 Critical Dimensions of Control Building – Part 2 ..... 2.16-78
Table 2.16.6-2 ITAAC For The Control Building 2.16-79
Table 2.16.7-1 Critical Dimensions of Fuel Building – Part 1 ..... 2.16-89
Table 2.16.7-1 Critical Dimensions of Fuel Building – Part 2 ..... 2.16-91
Table 2.16.7-2 ITAAC For The Fuel Building 2.16-92
Table 2.19-1 ITAAC For Plant Security System 2.19-1
Table 3.1-1 ITAAC For The Design of Piping Systems and Components 3.1-2
Table 3.2-1 ITAAC For Software Development 3.2-3
Table 3.3-1 ITAAC For Human Factors Engineering 3.3-3
Table 3.4-1 ITAAC For Radiation Protection 3.4-2
Table 3.6-1 ITAAC For Design Reliability Assurance Program 3.6-2
Table 3.7-1 ITAAC For The Post Accident Monitoring Instrumentation 3.7-4
Table 3.8-1 ITAAC for Environmental Qualification of Mechanical and Electrical Equipment 3.8-2
Table 5.1-1 Envelope of ESBWR Standard Plant Site Parameters (1) 5.1-2

List of Illustrations

Figure 1.1.1-1. RPV Water Level Range Definition 1.1-8
Figure 1.2-1. Legend for Tier 1 System Diagrams 1.2-1
Figure 2.1.1-1. Reactor Pressure Vessel System Key Features Layout 2.1-10
Figure 2.1.1-2. Fuel Bundle and Control Rod Functional Arrangement 2.1-11
Figure 2.1.2-1. Safety Relief Valves, Depressurization Valves and Steamline Diagram 2.1-33
Figure 2.1.2-2. NBS Steamlines and Feedwater Lines 2.1-34
Figure 2.1.2-3. Safety-Relief Valve Discharge Line Quencher Arrangement 2.1-35
Figure 2.2.1-1. Deleted 2.2-14
Figure 2.2.2-1. Control Rod Drive System 2.2-33
Figure 2.2.3-1. Deleted 2.2-39
Figure 2.2.4-1. Standby Liquid Control System Simplified Diagram 2.2-65
Figure 2.3.1-1. Process Radiation Monitoring System Diagram 2.3-11
Figure 2.4.1-1. Isolation Condenser System Schematic 2.4-32
Figure 2.4.2-1. Gravity-Driven Cooling System 2.4-62
Figure 2.6.1-1. Reactor Water Cleanup/Shutdown Cooling System 2.6-15
Figure 2.6.2-1. Fuel and Auxiliary Pools Cooling Cleanup System 2.6-29
Figure 2.11.5-1. Turbine Gland Seal System Arrangement 2.11-18
Figure 2.12.3-1. Reactor Component Cooling Water System Functional Arrangement 2.12-6
Figure 2.12.5-1. NICWS Functional Arrangement 2.12-10
Figure 2.12.7-1. Plant Service Water System Functional Arrangement 2.12-14
Figure 2.13.1-1 Sh 1. Onsite AC Power System Functional Arrangement 2.13-9
Figure 2.13.1-1 Sh 2. Onsite AC Power System Functional Arrangement 2.13-10
Figure 2.13.3-1. Safety-Related 250 VDC System Functional Arrangement 2.13-23
Figure 2.13.3-2 Sh 1. Nonsafety-Related 250 VDC System Functional Arrangement 2.13-24
Figure 2.13.3-2 Sh 2. Nonsafety-Related 125 VDC System Functional Arrangement 2.13-25
Figure 2.13.5-1. Safety-Related UPS System Functional Arrangement 2.13-39
Figure 2.13.5-2 Sh 2 Nonsafety-Related UPS System Functional Arrangement 2.13-41
Figure 2.15.1-1. Containment System 2.15-34
Figure 2.15.3-1. Containment Internal Structures 2.15-40
Figure 2.15.4-1. Passive Containment Cooling System Schematic 2.15-51
Figure 2.15.7-1. Containment Monitoring System Functional Arrangement 2.15-66
Figure 2.16.2-1. CLAVS Functional Arrangement Diagram 2.16-30
Figure 2.16.2-2. CONAVS Functional Arrangement Diagram 2.16-31
Figure 2.16.2-3. REPAVS Functional Arrangement Diagram 2.16-32
Figure 2.16.2-4. CRHAVS Functional Arrangement Diagram 2.16-33
Figure 2.16.2-5a. CBGAVS (Set A) Functional Arrangement Diagram 2.16-34
Figure 2.16.2-5b. CBGAVS (Set B) Functional Arrangement Diagram 2.16-35
Figure 2.16.2-6. TBVS Functional Arrangement Diagram 2.16-36
Figure 2.16.2-7. FBGAVS Functional Arrangement Diagram 2.16-37
Figure 2.16.2-8. FBFPVS Functional Arrangement Diagram 2.16-38
Figure 2.16.2-9. EBVS Functional Arrangement Diagram 2.16-39
Figure 2.16.3-1. Fire Protection System 2.16-47
Figure 2.16.5-1. RB Concrete Outline Plan at EL –11500 ..... 2.16-65
Figure 2.16.5-2. RB Concrete Outline Plan at EL –6400 ..... 2.16-66

Figure 2.16.5-3. RB Concrete Outline Plan at EL –1000 ..... 2.16-67
Figure 2.16.5-4. RB Concrete Outline Plan at EL 4650 ..... 2.16-68
Figure 2.16.5-5. RB Concrete Outline Plan at EL 9060 ..... 2.16-69
Figure 2.16.5-6. RB Concrete Outline Plan at EL 13570 ..... 2.16-70
Figure 2.16.5-7. RB Concrete Outline Plan at EL 17500 ..... 2.16-71
Figure 2.16.5-8. RB Concrete Outline Plan at EL 27000 ..... 2.16-72
Figure 2.16.5-9. RB Concrete Outline Plan at EL 34000 ..... 2.16-73
Figure 2.16.5-10. RB Concrete Outline N-S Section 2.16-74
Figure 2.16.5-11. RB Concrete Outline E-W Section 2.16-75
Figure 2.16.6-1. CB Concrete Outline Plan at EL –7400 ..... 2.16-83
Figure 2.16.6-2. CB Concrete Outline Plan at EL –2000 ..... 2.16-84
Figure 2.16.6-3. CB Concrete Outline Plan at EL 4650 ..... 2.16-85
Figure 2.16.6-4. CB Concrete Outline Plan at EL 9060 ..... 2.16-86
Figure 2.16.6-5. CB Concrete Outline E-W Section 2.16-87
Figure 2.16.7-1. FB Concrete Outline Plan at EL –11500 ..... 2.16-94
Figure 2.16.7-2. FB Concrete Outline Plan at EL –6400 ..... 2.16-95
Figure 2.16.7-3. FB Concrete Outline Plan at EL –1000 ..... 2.16-96
Figure 2.16.7-4. FB Concrete Outline Plan at EL 4650 ..... 2.16-97
Figure 2.16.7-5. FB Concrete Outline Plan at EL 22500 ..... 2.16-98
Figure 2.16.7-6. FB Concrete Outline N-S Section 2.16-99
Figure 5.1-1. ESBWR Horizontal SSE Design Ground Spectra at Foundation Level 5.1-8
Figure 5.1-2. ESBWR Vertical SSE Design Ground Response Spectra at Foundation Level 5.1-9

1. INTRODUCTION

This document provides the Tier 1 material of the ESBWR Design Control Document (DCD).

1.1 DEFINITIONS AND GENERAL PROVISIONS

1.1.1 Definitions

The definitions below apply to terms which may be used in the Design Descriptions and associated Inspections, Tests, Analyses, and Acceptance Criteria (ITAAC).

Acceptance Criteria means the performance, physical condition, or analysis results for a structure, system, or component that demonstrates a design commitment is met.

Analysis means a calculation, mathematical computation, or engineering or technical evaluation. Engineering or technical evaluations could include, but are not limited to, comparisons with operating experience or design of similar structures, systems, or components.

As-built means the physical properties of the structure, system or component, following the completion of its installation or construction activities at its final location at the plant site. Determination of physical properties of the as-built structure, system, or component may be based on measurements, inspections, or tests that occur prior to installation provided that subsequent fabrication, handling, installation, and testing do not alter the properties.

ASME Code Report means a report required by the ASME Code and whose content requirements are stipulated by the ASME Code. Each such ASME Code report is final, and when required is certified in accordance with the Code.

Cold shutdown means a *safe shutdown* with the average reactor coolant temperature ≤ 93.3°C (200°F).

Containment means the Primary Containment System, unless explicitly stated otherwise.

Design Commitment means that portion of the Design Description that is verified by ITAAC.

Design Description means that portion of the design that is certified.

Division is the designation applied to a given safety-related system or set of components that enables the establishment and maintenance of physical, electrical, and functional independence from other redundant sets of components.

Equipment Identification Number as used in Tier 1 means the designation on a Tier 1 figure and is not representative of an actual equipment number or tag number.

Equipment Qualification

For purposes of ITAAC:

Environmental Qualification: Type tests, or type tests and/or analyses, of the safety-related electrical equipment demonstrate qualification to applicable normal, abnormal and design basis accident conditions without loss of the safety-related function for the time needed during and following the conditions to perform the safety-related function. These harsh environmental conditions, as applicable to the bounding design basis accident(s), are as follows: expected time-dependent temperature and pressure profiles, humidity, chemical

effects, radiation, aging, submergence, and their synergistic effects which have a significant effect on equipment performance.

As used in the associated ITAAC, the term "safety-related electrical equipment" constitutes the equipment itself, connected instrumentation and controls, connected electrical components (such as cabling, wiring, and terminations), and the lubricants necessary to support performance of the safety-related functions of the safety-related electrical components identified as being subject to the environmental qualification requirements.

Type tests, or type tests and/or analyses, of the safety-related mechanical equipment demonstrate qualification to applicable normal, abnormal and design basis accident conditions without loss of the safety-related function for the time needed during and following the conditions to perform the safety-related function considering the applicable harsh environmental conditions. As used in this paragraph, "safety related mechanical components" refers to mechanical parts, subassemblies or assemblies that are categorized as Quality Group A, B or C. Mechanical components qualification also may be by type tests, analyses or a combination of tests and analyses of individual parts or subassemblies or of complete assemblies rather than by testing the individual parts or subassemblies separately.

Safety-related equipment located in a mild environment will be qualified for their environmental conditions through specifications and certifications to the environments; however, for a mild environment, only safety-related digital instrumentation and control equipment will be addressed by ITAAC in Tier 1, consistent with NRC guidance in NUREG-0800, Section 14.3. Additionally, EMI susceptibility and emissions qualification is performed by type testing for the safety-related digital instrumentation and control equipment and is not specifically addressed in an ITAAC. ITAAC address analyses of material data for safety-related mechanical equipment located in a harsh environment.

Seismic Qualification: Type tests, analyses, or a combination of type tests and analyses of the Seismic Category I mechanical and electrical equipment (including connected instrumentation and controls) may be used to demonstrate that the as-built equipment, including associated anchorage, is qualified to withstand design basis dynamic loads without loss of its safety-related function.

Exists, when used in Acceptance Criteria, means that the item is present and meets the design description.

Functional Arrangement/Physical Arrangement (for a Building) means the arrangement of the building features (e.g., floors, ceilings, walls, basemat and doorways) and of the structures, systems, or components within, as specified in the building Design Descriptions.

Functional Arrangement (for a System) means the physical arrangement of systems and components to provide the service for which the system in intended, and which is described in the system Design Description.

Hot shutdown means a *safe shutdown* with the average reactor coolant temperature > 215.6°C (420°F).

Hot standby means a subcritical or critical condition (1) with thermal power (including decay heat) ≤ 5% of rated, (2) in which reactor temperatures and pressures are near normal operating conditions, and (3) from which normal power operation can readily be achieved.

Inspect or **Inspection** means visual observations, physical examinations, or review of records based on visual observation or physical examination that compare the structure, system, or component condition to one or more Design Commitments. Examples include, but are not limited to, walk-downs, configuration checks, measurements of dimensions, and non-destructive examinations. Inspections also may include review of design and construction documents including drawings, calculations, analyses, test procedures and results, certificates of compliance, purchase records, and other documents that may verify that the acceptance criteria of a particular ITAAC are met.

Inspect for Retrievability of a display means to visually observe that the specified information appears on a monitor when summoned by the operator.

Operate means the actuation, control, running, and/or shutting down (*e.g.,* closing, turning off) of equipment.

Reactor Pressure Vessel Water (RPV) Level means the various levels used as reference points for instrumentation ranges. Figure 1.1.1-1 shows the relative location of the defined water levels and the overlap in the level measurement ranges.

Report means, as used in the Acceptance Criteria, a document created by or for the licensee that verifies that the acceptance criteria of the subject ITAAC have been met and references the supporting documentation. Reports typically include but are not limited to: results of walkdowns, results of visual inspections, field measurements, and reviews of design and construction documents.

Safe shutdown (generic definition) is a shutdown with:

(1) The reactivity of the reactor kept to a margin below criticality consistent with Technical Specifications;

(2) The core decay heat being removed at a controlled rate sufficient to prevent core or reactor coolant system thermal design limits from being exceeded;

(3) Components and systems necessary to maintain these conditions operating within their design limits; and

(4) Components and systems, necessary to keep doses within prescribed limits, operating properly.

Safe shutdown for station blackout means bringing the plant to those shutdown conditions specified in plant Technical Specifications as Hot Standby, Hot Shutdown or Stable Shutdown.

Stable shutdown (*safe stable condition* from SECY-94-084) means a *safe shutdown* with the average reactor coolant temperature ≤ 215.6°C (420°F).

Test or **Testing** means the actuation, operation, or establishment of specified conditions, to evaluate the performance or integrity of as-built structures, systems, or components, unless explicitly stated otherwise.

Train means a redundant, identical mechanical function within a system. When referring to an instrumentation and control system, train is defined as the redundant, identical sets of 2/4 trip decisions and subsequent logic (*i.e.,* timers, permissives and interlocks) within an electrical division that actuate the series load drivers of a safety-related component. Each

train utilizes the individual trip decisions from the sensor channels of each of the four divisions.

Type Test means a test on one or more sample components of the same type and manufacturer to qualify other components of that same type and manufacturer. A type test is not necessarily a test of the as-built structures, systems, or components.

Verification of the functional arrangement of a system, as used in an ITAAC, means verifying that the system is constructed as depicted in the Tier 1 design description and design drawings, including equipment and instrument locations, if applicable.

1.1.2 General Provisions

The following general provisions are applicable to the design descriptions and associated ITAAC.

1.1.2.1 Treatment of Individual Items

The absence of any discussion or depiction of an item in the Design Description or accompanying figures shall not be construed as prohibiting a licensee from utilizing such an item, unless it would prevent an item from performing its safety functions, or impairing the performance of those safety functions, as discussed or depicted in the Design Description or accompanying figures.

If an inspection, test, or analyses requirement does not specify the temperature or other conditions under which a test must be run, then the test conditions are not constrained.

When the term "operate," "operates" or "operation" is used with respect to an item discussed in the Acceptance Criteria, it refers to the actuation, control, running and/or shutting down of the item. When the term "exist," "exists" or "existence" is used with respect to an item discussed in the Acceptance Criteria, it means that the item is present and meets the Design Description.

1.1.2.2 Implementation of ITAAC

Inspections, Tests, Analyses, and Acceptance Criteria (ITAAC) are provided in tables with the following three-column format:

Design Commitment	Inspections, Tests, Analyses	Acceptance Criteria

Each Design Commitment in the left-hand column of the ITAAC tables has an associated requirement for Inspections, Tests or Analyses (ITA) specified in the middle column of the tables. The identification of a separate ITA entry for each Design Commitment shall not be construed to require that separate inspections, tests, or analyses must be performed for each Design Commitment. Instead, the activities associated with more than one ITA entry may be combined, and a single inspection, test, or analysis may be sufficient to implement more than one ITA entry.

An ITA may be performed by the licensee of the plant or by its authorized vendors, contractors, or consultants. Furthermore, an ITA may be performed by more than a single individual or group, may be implemented through discrete activities separated by time, and may be performed at any time prior to fuel load (including before issuance of the Combined Operating License for those ITAAC that do not require as-installed equipment). Additionally, ITA may be performed as part of the activities that are required to be performed under 10 CFR 50 (including, for example, the Quality Assurance (QA) program required under Appendix B to Part 50). Therefore, an ITA need not be performed as a separate or discrete activity.

Many of the Acceptance Criteria include the words "A report exists and concludes that …." This concept indicates that the ITAAC for that Design Commitment will be met when it is confirmed that appropriate documentation exists and the documentation shows that the Design Commitment is met. Appropriate documentation may be a single document or a collection of documents that show that the stated Acceptance Criteria are met. Examples of appropriate documentation include design reports, test reports, inspection reports, analysis reports, evaluation reports, design and manufacturing

procedures, certified data sheets, commercial dedication procedures and records, quality assurance records, calculation notes, and equipment qualification data packages.

Many entries in the ITA column of the ITAAC tables include the words "Inspection will be performed for the existence of a report verifying…" When these words are used it indicates that the ITA is tests, type tests, analyses, or a combination of tests, type tests, and analyses and a report will be produced documenting the results. This report will be available for inspection.

Many ITAAC are only a reference to another Tier 1 location, either a section, subsection, or ITAAC table entry (for example, "See Tier 1, Section…"). A reference to another ITAAC location is always in both the ITA and acceptance criteria columns for a design commitment. This reference is an indication that the ITA and Acceptance Criteria for that Design Commitment are satisfied when the referenced ITA are completed and the Acceptance Criteria for the referenced Tier 1 sections, subsections, or table entries are satisfied.

For those nonsystem-based ITAAC, which address piping and equipment qualification, the ITA and Acceptance Criteria may be satisfied on a system-by-system basis so as not to delay completion of ITAAC for a particular system. In this manner, a system may be turned over for operation following verification of the information needed to satisfy the nonsystem-based ITAAC. Documentation of completion of the ITAAC for a particular system will be retained in a manner that will allow verification of completion of the ITAAC for the nonsystem-based ITAAC. Notification to the NRC of completion of the nonsystem-based ITAAC may be on a system basis throughout construction and should be discussed with the NRC whether notification should be provided. Notification to the NRC will be made upon final completion of the nonsystem-based ITAAC for purposes of ensuring that the Acceptance Criteria have been met.

The Acceptance Criteria are generally stated in terms of a value with and acceptable range, or with a values that is either a minimum or maximum. For these ITAAC, the acceptance criteria for performing the ITAAC will be as stated in the Acceptance Criteria. In some cases, the Acceptance Criteria are stated in terms of nominal values without an acceptable range. For these ITAAC, the acceptable range will be determined at the time of performing the ITAAC.

1.1.2.3 Discussion of Matters Related to Operations

In some cases, the Design Descriptions in this document refer to matters that relate to operation, such as normal valve or breaker alignment during normal operation modes. Such discussions are provided solely to place the Design Description provisions in context (*e.g.,* to explain automatic features for opening or closing valves or breakers upon off-normal conditions). Such discussions shall not be construed as requiring operators during operation to take any particular action (*e.g.,* to maintain valves or breakers in a particular position during normal operation).

1.1.2.4 Interpretation of Figures

In many but not all cases, the Design Descriptions in Section 2 include one or more figures, which may represent a functional diagram, general structural representation, or another general illustration. For instrumentation and control systems, the figures also represent aspects of the relevant logic of the system or part of the system. Unless specified explicitly, these figures are not indicative of the scale, location, dimensions, shape, or spatial relationships of as-built structures, systems, or components. In particular, the as-built attributes of structures, systems, and

components may vary from the attributes depicted on these figures, provided that those safety functions discussed in the Design Description pertaining to the figure are not adversely affected.

1.1.2.5 Rated Reactor Core Thermal Power

The initial rated reactor core thermal power for the standard ESBWR is 4500 megawatts thermal (MWt).

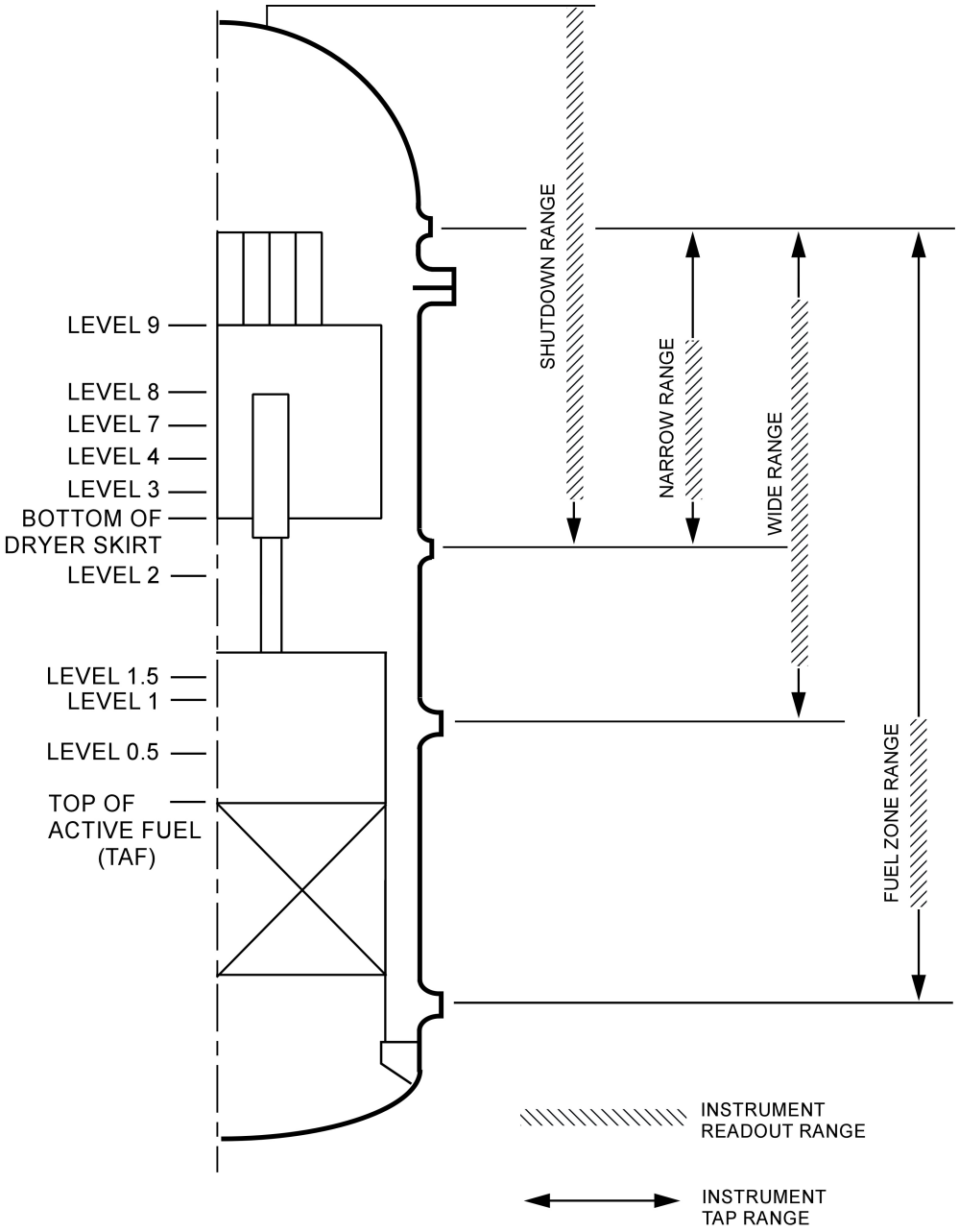

Figure 1.1.1-1. RPV Water Level Range Definition

1.2 FIGURE LEGEND

Certain Tier 1 sections include figures described in the design description. A figure legend is provided in Figure 1.2-1 for certain symbols used in system functional arrangement diagrams. The figure legend is provided for information and is not part of the Tier 1 Material. Many of the Tier 1 figures identify specific equipment and may include figure specific legends. Electrical and building drawings contain figure-specific legends and equipment nomenclature. Other figures may be labeled as necessary to explain the content of the figure.

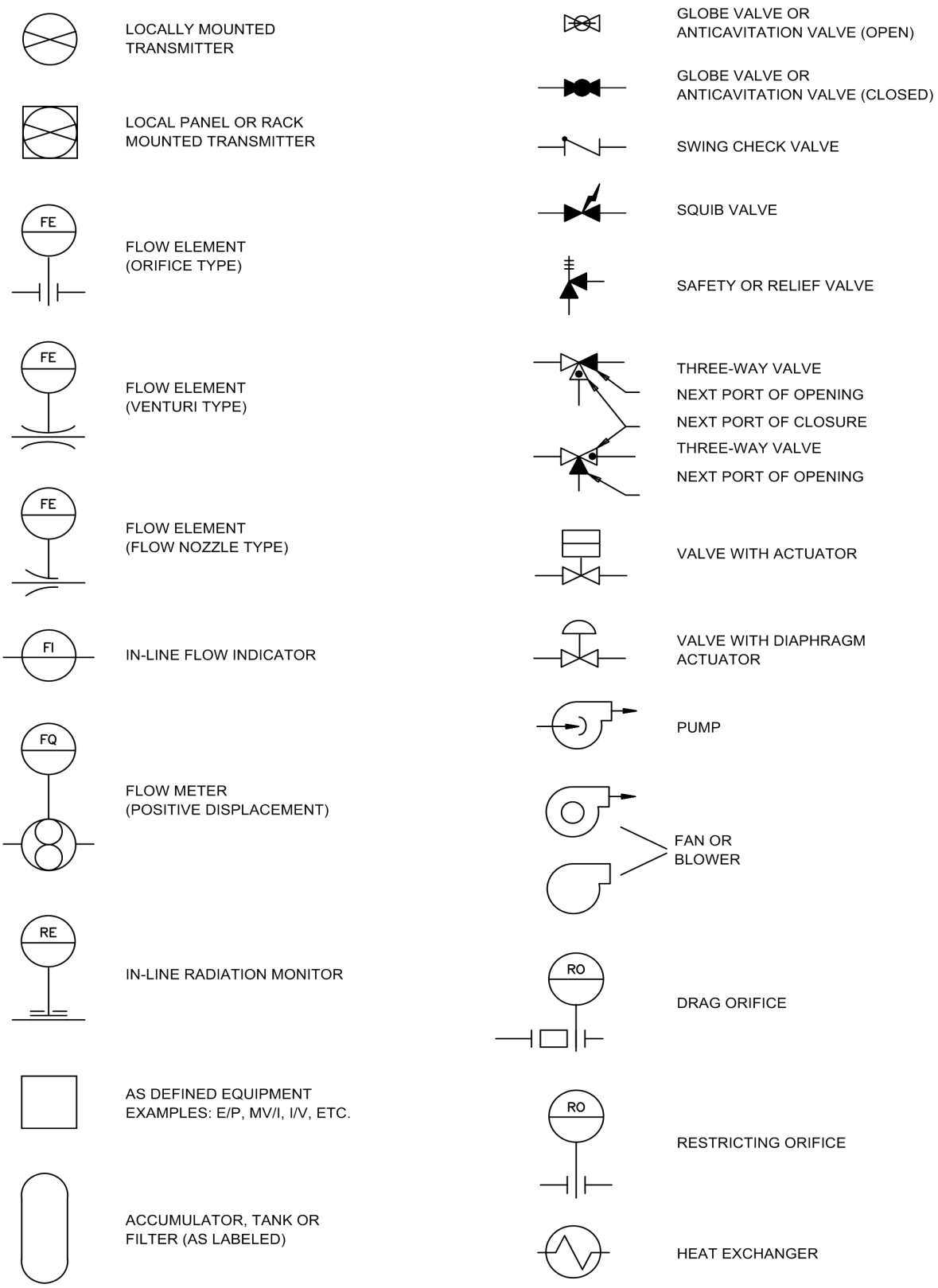

Figure 1.2-1. Legend for Tier 1 System Diagrams

2. DESIGN DESCRIPTIONS AND ITAAC

This section provides the certified design material for each of the ESBWR systems that is either fully or partially within the scope of the Certified Design.

2.1 NUCLEAR STEAM SUPPLY

The following subsections describe the major Nuclear Steam Supply Systems (NSSS) components of the Reactor Pressure Vessel System and the Nuclear Boiler System. This section also describes the natural circulation process for the ESBWR.

2.1.1 Reactor Pressure Vessel System

Design Description

The RPV system generates heat and boils water to steam in a direct cycle. The functional arrangement of the RPV system includes the reactor core and reactor internals (see Figure 2.1.1-1). The chimney provides an additional elevation head (or driving head) necessary to sustain natural circulation flow through the RPV. The chimney also forms an annulus separating the subcooled recirculation flow returning downward from the steam separators and feedwater from the upward steam-water mixture flow exiting the core. The steam is separated from the steam-water mixture by passing the mixture sequentially through an array of steam separators attached to a removable cover on the top of the chimney assembly, and through the steam dryer, resulting in outlet dry steam. The water mixes with the feedwater as it comes into the RPV through the feedwater nozzle. RPV internals consist of core support structures and other equipment.

The RPV is located in the containment. Internal component locations are shown on Figure 2.1.1-1.

The reactor core contains a matrix of fuel rods assembled into fuel assemblies using structural elements. Control rods in the reactor perform the functions of power distribution shaping, reactivity control, and scram reactivity insertion for safety shutdown response. The core is designed for 1132 fuel bundles and 269 control rods arranged as shown in Figure 2.1.1-2.

(1) The functional arrangement of the RPV system is as described in the Design Description of this Subsection 2.1.1, Table 2.1.1-1 and Figure 2.1.1-1.

(2) The key dimensions (and acceptable variations) of the as-built RPV are as described in Table 2.1.1-2.

(3) ASME Code Section III

a1. The RPV and its components identified in Table 2.1.1-1 (shroud, shroud support, top guide, core plate, control rod guide tubes and fuel supports) as ASME Code Section III are designed in accordance with ASME Code Section III requirements and seismic Category I requirements.

a2. The RPV and its components identified in Table 2.1.1-1 (shroud, shroud support, top guide, core plate, control rod guide tubes and fuel supports) as ASME Code Section III shall be reconciled with the design requirements.

a3. The RPV and its components identified in Table 2.1.1-1 (shroud, shroud support, top guide, core plate, control rod guide tubes and fuel supports) as ASME Code Section III are fabricated, installed, and inspected in accordance with ASME Code Section III requirements.

(4) Pressure boundary welds in components identified in Table 2.1.1-1 as ASME Code Section III meet ASME Code Section III requirements.

(5) The components identified as ASME Code Section III retain their pressure boundary integrity at their design pressure.

(6) The seismic Category I equipment identified in Table 2.1.1-1 can withstand seismic design basis loads without loss of safety function.

(7) RPV surveillance specimens are provided from the forging material of the beltline region and the weld and heat affected zone of a weld typical of those adjacent to the beltline region. Brackets welded to the vessel cladding at the location of the calculated peak fluence are provided to hold the removable specimen holders and a neutron dosimeter in place.

(8) The RPV internal structures listed in Table 2.1.1-1 (chimney and partitions, chimney head and steam separators assembly, and steam dryer assembly) must meet the limited provisions of ASME Code Section III regarding certification that these components maintain structural integrity so as not to adversely affect RPV core support structure.

(9) The initial fuel to be loaded into the core will withstand flow-induced vibration and maintain fuel cladding integrity during operation.

(10) The fuel bundles and control rods intended for initial core load have been designed and constructed in accordance with the principal design requirements.

(11) The reactor internals arrangement will accommodate the fuel bundle and control rod locations shown on Figure 2.1.1-2.

Inspections, Tests, Analyses and Acceptance Criteria

Table 2.1.1-3 provides a definition of the inspections, tests, and/or analyses, together with associated acceptance criteria for the Reactor Pressure Vessel System.

Table 2.1.1-1

Reactor Pressure Vessel System Mechanical Equipment

Equipment Name	ASME Code Section III	Seismic Cat. I	RCPB Component	Containment Isolation Valve	Remotely Operated Valve	Loss of Motive Power Position	MCR Alarms
RPV	Yes	Yes	Yes	-	-	-	-
Core support structures (shroud, shroud support, top guide, core plate, control rod guide tubes and fuel supports) which have a support function	Yes	Yes	-	-	-	-	-
Chimney and Partitions	Yes*	-	-	-	-	-	-
Chimney head and steam separators assembly	Yes*	-	-	-	-	-	-
Steam dryer assembly	Yes*	-	-	-	-	-	-

* The chimney and partitions, the chimney head and steam separators assembly, and the steam dryer assembly are subject to the ASME III certification requirement specified in ASME Code Section III, Subsection NG-1122 (c).

Table 2.1.1-2

Key Dimensions of RPV Components and Acceptable Variations

Description	**Dimension/ Elevation** (Figure 2.1.1-1)	**Nominal Value** (mm, in.)	**Acceptable Variation(s)** (mm, in.)
RPV bottom head inside invert elevation	A	0	Reference 0
Bottom of active fuel location from elevation zero*	B	4405, 173.4	±16, 0.63
Top of active fuel location from elevation zero*	C	7453, 293.4	±16, 0.63
RPV top head inside invert elevation	D	27560, 1085	±100, 3.94
RPV inside diameter (inside cladding)	E	7112, 280.0	±51, 2.01]
RPV wall thickness in beltline (including cladding)	F	182, 7.17	177.2 min, 6.976 min

* Dimension is verified by calculations based on as-built interfacing components.

Table 2.1.1-3

ITAAC For Reactor Pressure Vessel System

Design Commitment	Inspections, Tests, Analyses	Acceptance Criteria
1. The functional arrangement of the RPV system is as described in the Design Description of this Subsection 2.1.1, Table 2.1.1-1 and Figure 2.1.1-1.	Inspections of the as-built RPV System will be conducted.	Report(s) document that the RPV system and core arrangement conforms to the functional arrangement described in the Design Description of this Subsection 2.1.1, Table 2.1.1-1 and Figure 2.1.1-1. For components identified in Table 2.1.1-1 as ASME Code Section III, this report is an ASME Code report.
2. The key dimensions (and acceptable variations) of the as-built RPV are as described in Table 2.1.1-2.	Inspection of the as-built RPV key dimensions (and acceptable variations thereof) will be conducted.	Report(s) document that the RPV conforms to the key dimensions (and acceptable variations) described in Table 2.1.1-2.
3. ASME Code Section III a1. The RPV and its components identified in Table 2.1.1-1 (shroud, shroud support, top guide, core plate, control rod guide tubes and fuel supports) as ASME Code Section III are designed in accordance with ASME Code Section III requirements and seismic Category I requirements.	Inspection of ASME Code Design Reports (NCA-3550) and required documents will be conducted.	ASME Code Design Reports (NCA-3550) (certified, when required by ASME Code) conclude that the design of the RPV and its components identified in Table 2.1.1-1 (shroud, shroud support, top guide, core plate, control rod guide tubes and fuel supports) as ASME Code Section III complies with the requirements of the ASME Code, Section III, including for those stresses and loads related to fatigue (including environmental effects), thermal expansion, seismic, and combined.

Table 2.1.1-3

ITAAC For Reactor Pressure Vessel System

Design Commitment	Inspections, Tests, Analyses	Acceptance Criteria
a2. The RPV and its components identified in Table 2.1.1-1 (shroud, shroud support, top guide, core plate, control rod guide tubes and fuel supports) as ASME Code Section III shall be reconciled with the design requirements.	A reconciliation analysis of the components using as-design and as-built information and ASME Code certified Design Reports (NCA-3550) will be performed.	An ASME Code Design Report (certified, when required by ASME Code) exists and concludes that design reconciliation has been completed in accordance with the ASME Code for as-built reconciliation of the RPV and its components identified in Table 2.1.1-1 (shroud, shroud support, top guide, core plate, control rod guide tubes and fuel supports) as ASME Code Section III. The report documents the results of the reconciliation analysis.
a3. The RPV and its components identified in Table 2.1.1-1 (shroud, shroud support, top guide, core plate, control rod guide tubes and fuel supports) as ASME Code Section III are fabricated, installed, and inspected in accordance with ASME Code Section III requirements.	Inspection of the components will be conducted.	ASME Code Data Reports (including N-5 Data reports, where applicable) (certified, when required by ASME Code) and inspection reports document that the RPV and its components identified in Table 2.1.1-1 (shroud, shroud support, top guide, core plate, control rod guide tubes and fuel supports) as ASME Code Section III are fabricated, installed, and inspected in accordance with ASME Code Section III requirements.

Table 2.1.1-3

ITAAC For Reactor Pressure Vessel System

Design Commitment	Inspections, Tests, Analyses	Acceptance Criteria
4. Pressure boundary welds in components identified in Table 2.1.1-1 as ASME Code Section III meet ASME Code Section III requirements.	Inspection of as-built pressure boundary welds in components will be performed in accordance with the ASME Code Section III.	An ASME Code Report exists and concludes that the ASME Code Section III requirements are met for non-destructive examination of pressure boundary welds in components in the RPV system.
5. The components in Table 2.1.1-1 identified as ASME Code Section III retain their pressure boundary integrity at their design pressure.	A hydrostatic test will be conducted on those components of the RPV system required to be hydrostatically tested by the ASME Code.	An ASME Code Report exists and concludes that the results of the hydrostatic test of the ASME Code components of the RPV system comply with the requirements of the ASME Code Section III.
6. The seismic Category I equipment identified in Table 2.1.1-1 can withstand seismic design basis loads without loss of safety function.	i) Inspection will be performed to verify that the seismic Category I equipment identified in Table 2.1.1-1 is located in a seismic Category I structure. ii) Type tests, analyses, or a combination of type tests and analyses of seismic Category I equipment will be performed.	Report(s) document that: i) The seismic Category I equipment identified in Table 2.1.1-1 is located in a seismic Category I structure. ii) A report exists and concludes that the seismic Category I equipment can withstand seismic design basis loads without loss of safety function.

Table 2.1.1-3

ITAAC For Reactor Pressure Vessel System

Design Commitment	Inspections, Tests, Analyses	Acceptance Criteria
	iii) Inspection will be performed for the existence of a report verifying that the as-installed equipment including anchorage is seismically bounded by the tested or analyzed conditions.	iii) A report exists and concludes that the as-installed equipment including anchorage is seismically bounded by the tested or analyzed conditions.
7. RPV surveillance specimens are provided from the forging material of the beltline region and the weld and heat affected zone of a weld typical of those adjacent to the beltline region. Brackets welded to the vessel cladding at the location of the calculated peak fluence are provided to hold the removable specimen holders and a neutron dosimeter in place.	Inspections of the as-built RPV system will be conducted for implementation of the RPV surveillance specimens, neutron dosimeter, and brackets. An analysis is performed to determine the location of the peak fluence.	Report(s) document the RPV surveillance specimens and neutron dosimeters are provided and that brackets are installed at the location(s) of calculated peak fluence determined by an analysis of the as-built configuration.
8. The RPV internal structures listed in Table 2.1.1-1 (chimney and partitions, chimney head and steam separators assembly, and steam dryer assembly) must meet the limited provisions of ASME Code Section III regarding certification that these components maintain structural integrity so as not to adversely affect RPV core support structure.	Inspections will be conducted of the as-built internal structures as documented in the ASME Code design reports.	Report(s) documented that the RPV internal structures listed in Table 2.1.1-1 (chimney and partitions, chimney head and steam separators assembly, and steam dryer assembly) meet the limited provisions of ASME Code Section III, NG-1122 (c), regarding certification that these components maintain structural integrity so as not to adversely affect RPV core support structure.

Table 2.1.1-3

ITAAC For Reactor Pressure Vessel System

Design Commitment	Inspections, Tests, Analyses	Acceptance Criteria
9. The initial fuel to be loaded into the core will withstand flow-induced vibration and maintain fuel cladding integrity during operation.	Flow-Induced Vibration (FIV) testing will be performed on the fuel bundle design that will be loaded into the ESBWR initial core and on the reference fuel design in reactor use during the time of the tests. Bundle and rod responses at various elevations between the ESBWR design and the fuel design with the most similar design features will be compared.	A report exists that documents test results are acceptable. Acceptable criteria are that (from an FIV performance aspect) each location's average Root Mean Square response does not exceed one order of magnitude greater than that of the reference bundle at each instrumented location.
10. The fuel bundles and control rods intended for initial core load have been designed and constructed in accordance with the established design requirements.	An analysis will be performed of the reactor core design.	A report exists and concludes that the fuel bundles and control rods intended for the initial core load have been designed and constructed in accordance with the principal design requirements.
11. The reactor internals arrangement will accommodate the fuel bundle and control rod locations shown on Figure 2.1.1-2.	An inspection of the as-built system will be performed.	The as-built reactor system accommodates the fuel bundle and control rod locations shown on Figure 2.1.1-2.

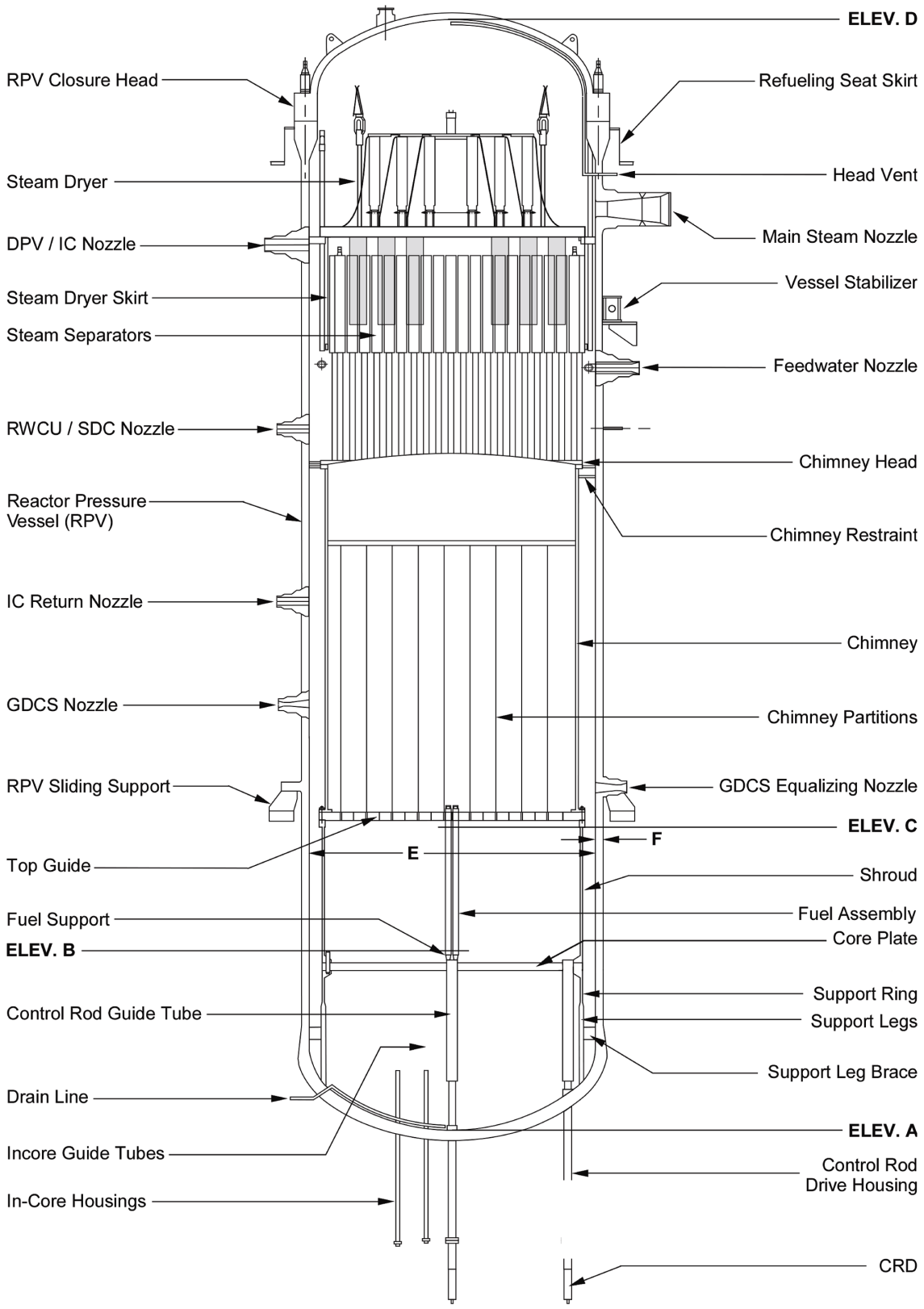

Figure 2.1.1-1. Reactor Pressure Vessel System Key Features Layout

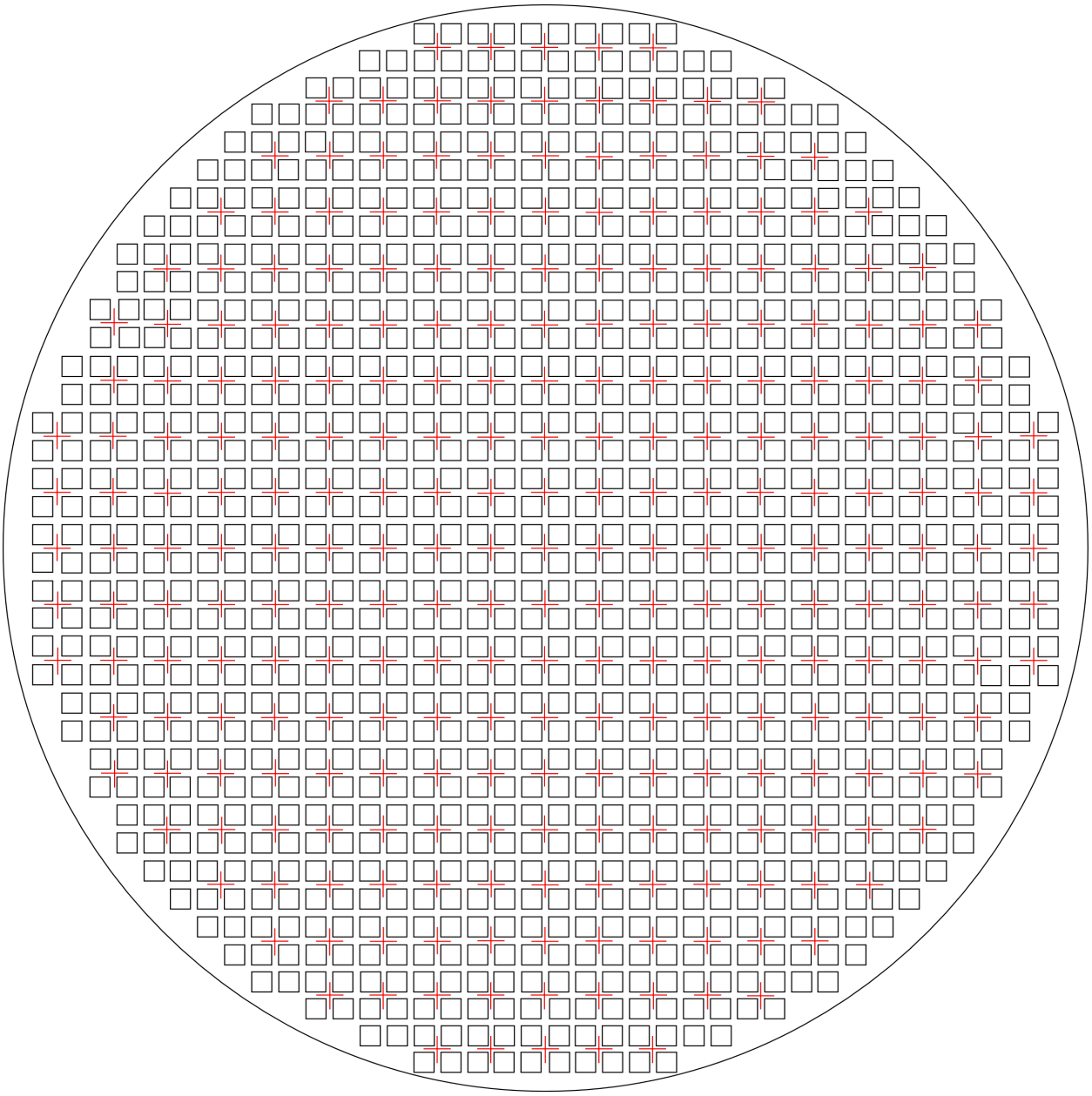

Fuel Bundle Locations 1132 Control Rod Locations 269

Figure 2.1.1-2. Fuel Bundle and Control Rod Functional Arrangement

2.1.2 Nuclear Boiler System

Design Description

The Nuclear Boiler System (NBS) generates steam from feedwater and transports steam from the RPV to the main turbine.

(1) The functional arrangement of the NBS is as described in the Design Description of this Subsection 2.1.2, Tables 2.1.2-1 and 2.1.2-2, and Figures 2.1.2-1, 2.1.2-2, and 2.1.2-3.

(2) ASME Code Section III

a1. The components identified in Table 2.1.2-1 as ASME Code Section III are designed in accordance with ASME Code Section III requirements and seismic Category I requirements.

a2. The components identified in Table 2.1.2-1 as ASME Code Section III shall be reconciled with the design requirements.

a3. The components identified in Table 2.1.2-1 as ASME Code Section III are fabricated, installed, and inspected in accordance with ASME Code Section III requirements.

b1. The piping identified in Table 2.1.2-1 as ASME Code Section III is designed in accordance with ASME Code Section III requirements and seismic Category I requirements.

b2. The as-built piping identified in Table 2.1.2-1 as ASME Code Section III shall be reconciled with the with the piping design requirements.

b3. The piping identified in Table 2.1.2-1 as ASME Code Section III is fabricated, installed, and inspected in accordance with ASME Code Section III requirements.

(3) Pressure Boundary Welds

a. Pressure boundary welds in components identified in Table 2.1.2-1 as ASME Code Section III meet ASME Code Section III requirements.

b. Pressure boundary welds in piping identified in Table 2.1.2-1 as ASME Code Section III meet ASME Code Section III requirements.

(4) Pressure Boundary Integrity

a. The components identified in Table 2.1.2-1 as ASME Code Section III retain their pressure boundary integrity at their design pressure.

b. The piping identified in Table 2.1.2-1 as ASME Code Section III retains its pressure boundary integrity at its design pressure.

(5) The seismic Category I components identified in Tables 2.1.2-1 and 2.1.2-2 can withstand seismic design basis loads without loss of safety function.

(6) Electrical Equipment Separation

a. Each of the NBS safety-related electrical equipment identified in Table 2.1.2-2 is powered from its respective safety-related divisonal power supply.

b. Separation is provided between NBS safety-related electrical equipment, and between safety-related electrical equipment and nonsafety-related cable.

(7) Deleted.

(8) Isolation Capability

a. The MSIVs close upon command

b. The FWIVs close upon command

(9) Deleted.

(10) MSIVs and FWIVs fail closed upon loss of electrical power to the valve actuating solenoid.

(11) Check valves designated in Table 2.1.2-1 as having an active safety-related function open, close, or both open and also close under system pressure, fluid flow, and temperature conditions.

(12) The throat diameter of each MSL flow restrictor is sized for design choke flow requirements.

(13) Each MSL flow restrictor has taps for two instrument connections to be used for monitoring the flow through its associated MSL.

(14) The combined steamline volume from the RPV to the main steam turbine stop valves and steam bypass valves is sufficient to meet the assumptions for AOOs and infrequent events.

(15) a. The MSIVs are capable of fast closing under design differential pressure, fluid flow, and temperature conditions.

b. The FWIVs are capable of fast closing under design differential pressure, fluid flow and temperature conditions.

(16) a. When all four inboard or outboard MSIVs are stroked from a full-open to full-closed position by their actuators, the combined leakage through the MSIVs for all four MSLs will be less than or equal to the design bases assumption value.

b. When all four FWIVs are stroked from full-open to full-closed position by their actuators, the combined liquid inflow leakage through the FWIVs for both feedwater lines will be less than or equal to the design bases assumption value.

c. When all four FWIVs are stroked from full-open to full-closed position by their actuators, the combined gas outflow leakage through the FWIVs for both feedwater lines will be less than or equal to the design bases assumption value.

(17) The opening pressure for the SRVs mechanical lift mode satisfies the overpressure protection analysis by lifting to its nominal set point pressure.

(18) The opening time for the SRVs in the overpressure operation of self-actuated or mechanical lift mode, which is measured from when the pressure exceeds the valve set pressure to when the valve is fully open, shall be less than or equal to the design opening time.

(19) The steam discharge capacity of each SRV satisfies (i.e., is greater than or equal to that used in) the overpressure protection analysis.

(20) The opening pressure for the SVs satisfies (i.e., is less than or equal to that used in) the overpressure protection analysis.

(21) The opening time for the SVs measured from when the pressure exceeds the valve set pressure to when the valve is fully open, shall be less than or equal to the design opening time.

(22) The steam discharge capacity of each SV satisfies (i.e., is greater than or equal to that used in) the overpressure protection analysis.

(23) The relief-mode actuator (and safety-related appurtenances) can open each SRV with the drywell (DW) pressure at design pressure.

(24) When actuated by an initiator (igniter charge), the booster assembly opens each DPV in less than or equal to the design opening time (opening time to full rated capacity).

(25) Each DPV minimum flow capacity is sufficient to support rapid depressurization of the RPV (i.e., has a flow capacity that is greater than or equal to the design flow capacity under design basis conditions).

(26) The equipment qualification of the NBS components is addressed in Tier 1, Section 3.8.

(27) The containment isolation portions of the NBS are addressed in Tier 1, Subsection 2.15.1.

(28) Vacuum breakers are provided on SRV discharge lines to reduce the post-discharge reflood height of water in the discharge lines.

(29) The SRV discharge line (SRVDL) vacuum breakers close to prevent steam bypass to the DW during SRV discharge, and open following a discharge completion to permit pressure equalization with the DW and prevent ingestion of a water slug into the SRVDL.

(30) The pressure loss coefficient of each of the following components is within the uncertainty band of the pressure loss coefficient used in the natural circulation flow analysis:

- Steam separator
- Fuel bundle
- Fuel support piece orifice
- Control rod guide tubes
- Shroud support

(31) The free volume for each of the following components is within the uncertainty band of the free volume used in the natural circulation flow analysis:

- RPV
- Downcomer
- Core
- Chimney
- Separator/dryer

(32) The hydraulic diameter, geometry of the heated surfaces, and flow area in fuel assemblies are within the uncertainty band of the geometry used in the natural circulation flow analysis.

(33) NBS software is developed in accordance with the software development program described in Section 3.2.

(34) NBS minimum inventory of alarms, displays, controls, and status indications in the main control room are addressed in section 3.3.

(35) Conformance with IEEE Standard 306 requirements by the safety-related control system, structures, systems and components is addressed in Subsection 2.2.15.

Inspections, Tests, Analyses and Acceptance Criteria

Table 2.1.2-3 provides a definition of the inspections, tests and/or analyses, together with associated acceptance criteria for the NBS.

Table 2.1.2-1

Nuclear Boiler System Mechanical Equipment

Equipment Name	Equipment ID on Figure 2.1.2-2	ASME Code Section III	Seismic Cat. I	RCPB Component	Containment Isolation Valve	Remotely Operated	Loss of Motive Power Position
Main steam lines to the seismic restraint in the steam tunnel	-	Yes	Yes	Yes	-	-	-
Inboard Main steam isolation valves	V8 (Typ. of 4)	Yes	Yes	Yes	Yes	Yes	Closed
Outboard Main steam isolation valves	V9 (Typ. of 4)	Yes	Yes	Yes	Yes	Yes	Closed
MSIV actuator and support hardware and associated structural supports	For valves V8, V9 (Typ. of 8)	Portions may be connected to ASME Code systems	Yes	Portions may be connected to RCPB	-	-	-
Main steam flow restrictors	-	Yes	Yes	Yes	-	-	-
Steam line drain/bypass subsystem	-	Yes	Yes	Portions	Inboard and outboard upstream drains isolation valves (see Table 2.15.1-1a)	-	-
Feedwater piping from RPV to seismic restraint upstream of isolation shutoff valve	-	Yes	Yes	Yes	-	-	-
Safety valves (SV)	V7	Yes	Yes	Yes	No	No	-

Table 2.1.2-1

Nuclear Boiler System Mechanical Equipment

Equipment Name	Equipment ID on Figure 2.1.2-2	ASME Code Section III	Seismic Cat. I	RCPB Component	Containment Isolation Valve	Remotely Operated	Loss of Motive Power Position
	(Typ. of 8)						
Safety relief valves (SRV)	V6 (Typ. of 10)	Yes	Yes	Yes	No	Yes (in relief mode)	Closed for relief mode
Depressurization valves	V5 (Typ. of 8 total)	Yes	Yes	Yes	No	Yes	Fail as is
RPV head vent subsystem	V1, V2, and V3	Yes	Yes	Yes	No	Yes (no active safety function)	Fail as is
System instrumentation – detection and monitoring (indication in Main Control Room): • Position of MSIVs • Position of DPVs • Position of SRVs • Differential pressure between two feedwater lines • Continuity circuit for each DPV squib	-	Safety-related fluid portions only	Yes	Safety-related fluid portions only	Safety-related fluid portions only (see Tier 1, Subsection 2.15.1)	-	-

Table 2.1.2-1

Nuclear Boiler System Mechanical Equipment

Equipment Name	Equipment ID on Figure 2.1.2-2	ASME Code Section III	Seismic Cat. I	RCPB Component	Containment Isolation Valve	Remotely Operated	Loss of Motive Power Position
device • Continuity circuit for each SRV							
SRV discharge lines	-	Yes	Yes	-	-	-	-
SRV discharge line vacuum relief valves	V18, V19 (Typ.)	Yes	Yes	No	No	-	-
SRV discharge line quencher	Q1 (Typ.)	Yes	Yes	No	-	-	-
Feedwater outboard isolation valves	V14, V17, V20, V21	Yes	Yes	Yes	Yes	Yes	Closed (gravity close on loss of system pressure)
Feedwater inboard isolation check valves	V12, V15	Yes	Yes	Yes	Yes (will close on reverse flow)	No	-
Feedwater branch line outboard isolation check valves (RWCU/SDC system connections)	V13, V16	Yes	Yes	Yes	Yes (active function to close on LOCA and will close on reverse flow)	Yes	- (gravity close on loss of system pressure)

Note: A dash means not applicable.

Table 2.1.2-2

Nuclear Boiler System Electrical Equipment

Equipment Name	Equipment ID on Figure 2.1.2-2	Control Q-DCIS/ DPS[1]	Safety-Related Electrical Equipment	Safety-Related Display	Active Safety Function	Seismic Category I	Remotely Operated	Containment Isolation Valve Actuator
Inboard Main steam isolation valves	V8 (Typ. of 4)	Yes	Yes	Yes	Close	Yes	Yes	Yes
Outboard Main steam isolation valves	V9 (Typ. of 4)	Yes	Yes	Yes	Close	Yes	Yes	Yes
Safety relief valves (SRV)	V6 (Typ. of 10)	Yes (ADS – See Section 2.2.13)	Yes	Yes	Open	Yes	Yes	No
Depressurization valves	V5 (Typ. of 8 total)	Yes	Yes	Yes	Open	Yes	Yes	No
Feedwater outboard isolation valves	V14, V17, V20, V21	Yes	Yes	Yes	Close	Yes	Yes	Yes
Feedwater branch line outboard isolation check valves	V13, V16	Yes	Yes	Yes	Yes	Yes	Yes	Yes
Reactor Pressure Transmitters (1 each in 4 divisions)	-	Yes	Yes	Yes	Yes	Yes	-	-
Reactor water level transmitters (1 each in 4 divisions)	-	Yes	Yes	Yes	Yes	Yes	-	-
MSIV Isolation Logic	-	Yes	Yes	Yes	Yes	Yes	-	-

Table 2.1.2-2

Nuclear Boiler System Electrical Equipment

Equipment Name	Equipment ID on Figure 2.1.2-2	Control Q-DCIS/ DPS[1]	Safety-Related Electrical Equipment	Safety-Related Display	Active Safety Function	Seismic Category I	Remotely Operated	Containment Isolation Valve Actuator
Leak Detection and Isolation System Logic	-	Yes	Yes	Yes	Yes	Yes	-	-

Note: A dash means not applicable.

Note 1: See Subsection 2.2.7.

Table 2.1.2-3

ITAAC For The Nuclear Boiler System

Design Commitment	Inspections, Tests, Analyses	Acceptance Criteria
1. The functional arrangement of the NBS is as described in the Design Description of this Subsection 2.1.2, Tables 2.1.2-1 and 2.1.2-2 and Figures 2.1.2-1, 2.1.2-2, and 2.1.2-3.	Inspection of the as-built system will be performed.	Report(s) document that the as-built NBS conforms to the functional arrangement described in the Design Description of this Subsection 2.1.2, Tables 2.1.2-1 and 2.1.2-2 and Figures 2.1.2-1, 2.1.2-2, and 2.1.2-3. For components and piping identified in Table 2.1.2-1 as ASME Code Section III, this report is an ASME Code report.
2. ASME Code Section III a1. The components identified in Table 2.1.2-1 as ASME Code Section III are designed in accordance with ASME Code Section III requirements and seismic Category I requirements.	Inspection of ASME Code Design Reports (NCA-3550) and required documents will be conducted.	ASME Code Design Reports (NCA-3550) (certified, when required by ASME Code) conclude that the design of the NBS components identified in Table 2.1.2-1 as ASME Code Section III complies with the requirements of the ASME Code, Section III, including for those stresses and loads related to fatigue (including environmental effects), thermal expansion, seismic, and combined.

Table 2.1.2-3

ITAAC For The Nuclear Boiler System

Design Commitment	Inspections, Tests, Analyses	Acceptance Criteria
a2. The components identified in Table 2.1.2-1 as ASME Code Section III shall be reconciled with the design requirements.	A reconciliation analysis of the components using as-design and as-built information and ASME Code certified Design Reports (NCA-3550) will be performed.	An ASME Code Design Report (certified, when required by ASME Code) exists and concludes that design reconciliation has been completed in accordance with the ASME Code for as-built reconciliation of the NBS components identified in Table 2.1.2-1 as ASME Code Section III. The report documents the results of the reconciliation analysis.
a3) The components identified in Table 2.1.2-1 as ASME Code Section III are fabricated, installed, and inspected in accordance with ASME Code Section III requirements.	Inspection of the components will be conducted.	ASME Code Data Reports (including N-5 Data reports, where applicable) (certified, when required by ASME Code) and inspection reports document that the components identified in Table 2.1.2-1 as ASME Code Section III are fabricated, installed, and inspected in accordance with ASME Code Section III requirements.
3. Pressure Boundary Welds a) Pressure boundary welds in components identified in Table 2.1.2-1 as ASME Code Section III meet ASME Code Section III requirements.	Inspection of the as-built pressure boundary welds components will be performed in accordance with the ASME Code Section III.	An ASME Code Report exists and concludes that the ASME Code Section III requirements are met for non-destructive examination of pressure boundary welds in components in the NBS.

Table 2.1.2-3

ITAAC For The Nuclear Boiler System

Design Commitment	Inspections, Tests, Analyses	Acceptance Criteria
b) Pressure boundary welds in piping identified in Table 2.1.2-1 as ASME Code Section III meet ASME Code Section III requirements.	Inspection of the as-built pressure boundary welds will be performed in accordance with the ASME Code Section III.	An ASME Code Report exists and concludes that the ASME Code Section III requirements are met for non-destructive examination of pressure boundary welds in the NBS.
4. Pressure Boundary Integrity		
a) The components identified in Table 2.1.2-1 as ASME Code Section III retain their pressure boundary integrity at their design pressure.	A hydrostatic test will be conducted on those code components of the NBS required to be hydrostatically tested by the ASME Code.	An ASME Code Report exists and concludes that the results of the hydrostatic test of the ASME Code components of the NBS comply with the requirements of the ASME Code Section III.
b) The piping identified in Table 2.1.2-1 as ASME Code Section III retains its pressure boundary integrity at its design pressure.	A hydrostatic test will be conducted on the code piping of the NBS required to be hydrostatically tested by the ASME Code.	An ASME Code Report exists and concludes that the results of the hydrostatic test of the ASME Code piping of the NBS comply with the requirements of the ASME Code Section III.
5.		Report(s) document that:
The seismic Category I components identified in Tables 2.1.2-1 and 2.1.2-2 can withstand seismic design basis loads without loss of safety function.	i) Inspection will be performed to verify that the seismic Category I components and valves identified in Tables 2.1.2-1 and 2.1.2-2 are located in a seismic Category I structure.	i) The seismic Category I components identified in Tables 2.1.2-1 and 2.1.2-2 is located in a seismic Category I structure.

Table 2.1.2-3

ITAAC For The Nuclear Boiler System

Design Commitment	Inspections, Tests, Analyses	Acceptance Criteria
	ii) Type tests, analyses, or a combination of type tests and analyses of seismic Category I components will be performed.	ii) A report exists and concludes that the seismic Category I components can withstand seismic design basis loads without loss of safety function.
	iii) Inspection will be performed to verify that the as-installed components including anchorage is bounded by the tested or analyzed conditions.	iii) A report exists and concludes that the loading on the as-installed components including associated anchorage falls within the design basis seismic load conditions used for type testing or analysis.
6a. Each of the NBS safety-related equipment identified in Table 2.1.2-2 is powered from its respective safety-related divisional power supply.	See Tier 1, Subsection 2.2.15 and Table 2.2.15-2, Items 21a & 21b.	See Tier 1, Subsection 2.2.15 and Table 2.2.15-2, Items 21a & 21b.
b. Separation is provided between NBS safety-related electrical equipment, and between safety-related electrical equipment and nonsafety-related cable.	See Tier 1, Subsection 2.2.15 and Table 2.2.15-2, Items 5a & 5b.	See Tier 1, Subsection 2.2.15 and Table 2.2.15-2, Items 5a & 5b.
7. Deleted		
8. Isolation Capability		
a. The MSIVs close upon command	Valve closure tests will be performed on the as-built MSIVs using a manual closure command to simulate an isolation signal.	Report(s) document that MSIVs close upon command.

Table 2.1.2-3

ITAAC For The Nuclear Boiler System

Design Commitment	Inspections, Tests, Analyses	Acceptance Criteria
b. The FWIVs close upon command	Valve closure tests will be performed on the as-built FWIVs using a manual closure command to simulate an isolation signal.	Report(s) document that the FWIVs close upon command
9. Deleted		
10. MSIVs and FWIVs fail closed upon loss of electrical power to the valve actuating solenoid.	Tests will be conducted on the as-built valve(s) under pre-operational conditions	Report(s) document that the MSIVs and FWIVs fail closed upon loss of electrical power to the valve actuating solenoid.
11. Check valves designated in Table 2.1.2-1 as having an active safety-related function open, close, or both open and also close under system pressure, fluid flow, and temperature conditions.	Tests of installed valves for opening, closing, or both opening and also closing, will be conducted under system preoperational pressure, fluid flow, and temperature conditions.	Report(s) document that, based on the direction of the differential pressure across the valve, each CV opens, closes, or both opens and also closes, depending upon the valve's safety functions.
12. The throat diameter of each MSL flow restrictor is sized for design choke flow requirements.	Inspections of each as-built MSL flow restrictor throat diameter will be performed	Report(s) document that the throat diameter of each MSL flow restrictor is less than or equal to 355 mm (14 in.).
13. Each MSL flow restrictor has taps for two instrument connections to be used for monitoring the flow through its associated MSL.	Inspections of the as-built installation of the MSL flow restrictor will be conducted to verify that it provides for two instrument connections.	Report(s) document that the as-built MSL flow restrictor provides for two instrument connections.

Table 2.1.2-3

ITAAC For The Nuclear Boiler System

Design Commitment	Inspections, Tests, Analyses	Acceptance Criteria
14. The combined steamline volume from the RPV to the main steam turbine stop valves and steam bypass valves is sufficient to meet the assumptions for AOOs and infrequent events.	See Table 2.11.1-1, Item 8.	See Table 2.11.1-1, Item 8.
15a. The MSIVs are capable of fast closing under design differential pressure, fluid flow and temperature conditions.	Type tests of the MSIV will be conducted in accordance with the design and purchase specifications to demonstrate that the MSIVs will fast close under design conditions.	Report(s) document that type testing demonstrates MSIVs are capable of fast closure in not less than 3 seconds and not more than 5 seconds under design conditions.
b. The FWIVs are capable of fast closing under design differential pressure, fluid flow and temperature conditions.	Type tests of the FWIVs will be conducted in accordance with the design and purchase specifications to demonstrate that the FWIVs will fast close under design conditions.	Report(s) document that type testing demonstrates FWIVs are capable of fast closure in not less than 10 seconds and not more than 15 seconds under design conditions.
16a. When all four inboard or outboard MSIVs are stroked from full-open to full-closed position by their actuators, the combined leakage through the MSIVs for all four MSLs will be less than or equal to the design bases assumption value.	Tests at preoperational conditions along with analysis will be performed on the as-built MSIVs to determine the leakage as adjusted to the specified design conditions.	Report(s) document that, when all MSIVs are stroked from the full-open to full-closed position by their actuators, the combined leakage through the MSIVs for all four MSLs is less than or equal to a total combined leakage (corrected to standard conditions) of less than or equal to 94.4 liters/minute (~3.333 ft^3/minute) for post-LOCA leakage.

Table 2.1.2-3

ITAAC For The Nuclear Boiler System

Design Commitment	Inspections, Tests, Analyses	Acceptance Criteria
16b. When all four FWIVs are stroked from full-open to full-closed position by their actuators, the combined liquid inflow leakage through the FWIVs for both feedwater lines will be less than or equal to the design bases assumption value.	Tests using demineralized water and analysis (if necessary) will be performed on the as-built FWIVs to determine the liquid inflow leakage as adjusted to the specified design conditions.	Report(s) document that, when all FWIVs are stroked from the full-open to full-closed position by their actuators, the combined leakage through the FWIVs for both feedwater lines is less than or equal to a total combined liquid inflow leakage (corrected to standard conditions) of less than or equal to 900 cc/minute (0.238 gpm) for post-LOCA leakage.
16c. When all four FWIVs are stroked from full-open to full-closed position by their actuators, the combined gas outflow leakage through the FWIVs for both feedwater lines will be less than or equal to the design bases assumption value.	Tests and analysis (if necessary) will be performed on the as-built FWIVs to determine the gas outflow leakage as adjusted to the specified design conditions.	Report(s) document that, when all FWIVs are stroked from the full-open to full-closed position by their actuators, the combined leakage through the FWIVs for both feedwater lines is less than or equal to a total combined gas outflow leakage (corrected to standard conditions) of less than or equal to 700 cc/minute (1.483 ft^3/hour) for post-LOCA leakage.
17. The opening pressure for the SRVs mechanical lift mode satisfies the overpressure protection analysis, by lifting at its nominal setpoint pressure.	Type test (at a facility) or setpoint test will be conducted in accordance with the ASME Code to certify the valve.	Report(s) document that testing/type testing verifies the mechanical lift nominal setpoint pressure of 8.366 $\pm$ 0.251 MPa gauge (1213 $\pm$ 36.39 psig).

Table 2.1.2-3

ITAAC For The Nuclear Boiler System

Design Commitment	Inspections, Tests, Analyses	Acceptance Criteria
18. The opening time for the SRVs in the overpressure operation of self-actuated or mechanical lift mode, which is measured from when the pressure exceeds the valve set pressure to when the valve is fully open, shall be less than or equal to the design opening time.	Analysis and type tests will be conducted in accordance with the ASME Code to ensure that the valves open within the design opening time.	Report(s) document that tests and analyses exist and conclude that opening time measured for the SRVs in the overpressure operation of self-actuated or mechanical lift mode is less than or equal to 0.5 second.
19. The steam discharge capacity of each SRV satisfies (i.e., is greater than or equal to that used in) the overpressure protection analysis.	Type tests (at a facility) will be conducted in accordance with the ASME Code for relief valve certification.	Report(s) document that valve capacity stamping on each SRV records the certified capacity at rated setpoint of 138 kg/s (304 lbm/s) minimum.
20. The opening pressure for the SVs satisfies (i.e. is less than or equal to that used in) the overpressure protection analysis.	Type tests (at a facility) or setpoint tests will be conducted in accordance with the ASME Code to certify the valve.	Report(s) document that testing/type testing verifies the mechanical lift nominal setpoint pressure of 8.503 $\pm$ 0.255 MPa gauge (1233 $\pm$ 36.99 psig).
21. The opening time for the SVs is measured from when the pressure exceeds the valve set pressure to when the valve is fully open shall be less than or equal to the design opening time.	Analysis and type tests (at a test facility) will be conducted in accordance with the ASME Code to ensure that the valves open within the design opening time.	Report(s) document that tests and analyses exist and conclude that opening time for the SVs is less than or equal to 0.5 seconds.
22. The steam discharge capacity of each SV satisfies (i.e., is greater than or equal to that used in) the overpressure protection analysis.	Type tests (at a facility) will be conducted in accordance with the ASME Code for relief valve certification.	Report(s) document that valve capacity stamping on each SV records the certified capacity at rated setpoint of 140.2 kg/s (309 lbm/s) minimum.

Table 2.1.2-3

ITAAC For The Nuclear Boiler System

Design Commitment	Inspections, Tests, Analyses	Acceptance Criteria
23. The relief-mode actuator (and safety-related appurtenances) can open each SRV with the DW pressure at design pressure.	An analysis and/or type test will be performed to demonstrate the capacity of the relief-mode actuation for each SRV.	Test/analysis report(s) conclude that the relief-mode actuation has the capacity to lift the SRVs to the full open position one time with the DW pressure at the DW design pressure.
24. When actuated by an initiator (igniter charge), the booster assembly opens each DPV in less than or equal to the design opening time (opening time to full rated capacity).	Type testing will be performed on the booster assemblies to confirm that they are capable of opening the valve at design basis conditions. Type testing, along with analyses to adjust for design basis conditions (if necessary), will be performed to demonstrate that the booster opens each DPV within the design opening time (opening time to full rated capacity) and design conditions.	Report exists and concludes that tests and analyses demonstrate that each DPV opens when actuated by the booster assembly in less than or equal to 0.45 seconds with an inlet pressure of 7,584 kPa ± 685 kPa gauge (1100 psig ± 99 psi) or greater.
25. Each DPV minimum flow capacity is sufficient to support rapid depressurization of the RPV (i.e., has a flow capacity that is greater than or equal to the design flow capacity under design basis conditions).	Analyses and type tests (at a test facility) will be performed.	Test reports and analyses exist and conclude that the DPV flow capacity is greater than or equal to 239 kg/s (527 lbm/s) at an inlet pressure of 7.48 Mpa gauge (1085 psig).
26. The equipment qualification of the NBS components is addressed in Tier 1, Section 3.8.	See Tier 1 Section 3.8.	See Tier 1 Section 3.8.

Table 2.1.2-3

ITAAC For The Nuclear Boiler System

Design Commitment	Inspections, Tests, Analyses	Acceptance Criteria
27. The containment isolation portions of the NBS are addressed in Tier 1, Subsection 2.15.1.	See Tier 1 Subsection 2.15.1.	See Tier 1 Subsection 2.15.1.
28. Vacuum breakers are provided on SRV discharge lines to reduce the post-discharge reflood height of water in the discharge lines.	An inspection and analysis will be performed to confirm that the vacuum breakers are installed and demonstrate that the vacuum breaker capacity and setpoint limit the water column in the discharge line.	Inspection report(s) document that the vacuum breakers are installed on the SRV discharge lines. An analysis exists that demonstrates that the vacuum breaker capacity and setpoint limit the water column in the discharge line.
29. The SRV discharge line (SRVDL) vacuum breakers close to prevent steam bypass to the DW during SRV discharge, and open following a discharge completion to permit pressure equalization with the DW and prevent ingestion of a water slug into the SRVDL	Type test will be performed on the vacuum breaker for disk-closed leakage at line pressure during SRV discharge, disk cracking (unseating) pressure, and full-open flow capacity.	Test report will document the following test criteria are met: • At SRVDL line pressure during SRV discharge the vacuum breaker leak rate is less than or equal to design leak rate; • The disk unseat begins at design cracking pressure; and, • At disk full lift the vacuum breaker achieves equal to or greater than design flow capacity.

Table 2.1.2-3

ITAAC For The Nuclear Boiler System

Design Commitment	Inspections, Tests, Analyses	Acceptance Criteria
30. The pressure loss coefficient of each of the following components is within the uncertainty band of the pressure loss coefficient used in the natural circulation flow analysis. • Steam separator • Fuel bundle • Fuel support piece orifice • Control rod guide tubes • Shroud support	As-built component records will be inspected and compared against inputs to the natural circulation analysis, considering the uncertainty analysis, performed to calculate pressure loss coefficients.	A report exists that documents that the pressure loss coefficient of each of the following components is within the uncertainty band of the pressure loss coefficient used in the natural circulation flow analysis: • Steam separator • Fule bundle • Fuel support piece orifice • Control rod guide • Shroud support
31. The free volume for each of the following components is within the uncertainty band of the free volume used in natural circulation flow analysis: • RPV • Downcomer • Core • Chimney • Separator/dryer	Inspection of as-built component records will be performed to determine the component free volume for each of the listed components	A report exists that concludes that the free volume of each of the following components is within the uncertainty band of the free volume used in the natural circulation flow analysis: • RPV • Downcomer • Core • Chimney • Separator/dryer

Table 2.1.2-3

ITAAC For The Nuclear Boiler System

Design Commitment	Inspections, Tests, Analyses	Acceptance Criteria
32. The hydraulic diameter, the geometry of heated surfaces, and flow area in fuel assemblies are within the uncertainty band of the geometry used in the natural circulation flow analysis.	As-built dimension inspection and analyses will be performed to determine the geometry of the fuel assemblies to be loaded.	A report exists and concludes that the hydraulic diameter, the geometry of heated surfaces, and flow area in the fuel assemblies are within the uncertainty band of the geometry used in the natural circulation flow analysis.
33. NBS software is developed in accordance with the software development program described in Section 3.2.	Section 3.2.	Section 3.2.
34. NBS minimum inventory of alarms, displays, controls, and status indications in the main control room are addressed in Section 3.3..	See Section 3.3..	See Section 3.3.
35. Conformance with IEEE Standard 306 requirements by the safety-related control system, structures, systems and components is addressed in Subsection 2.2.15.	See Subsection 2.2.15	See Subsection 2.2.15

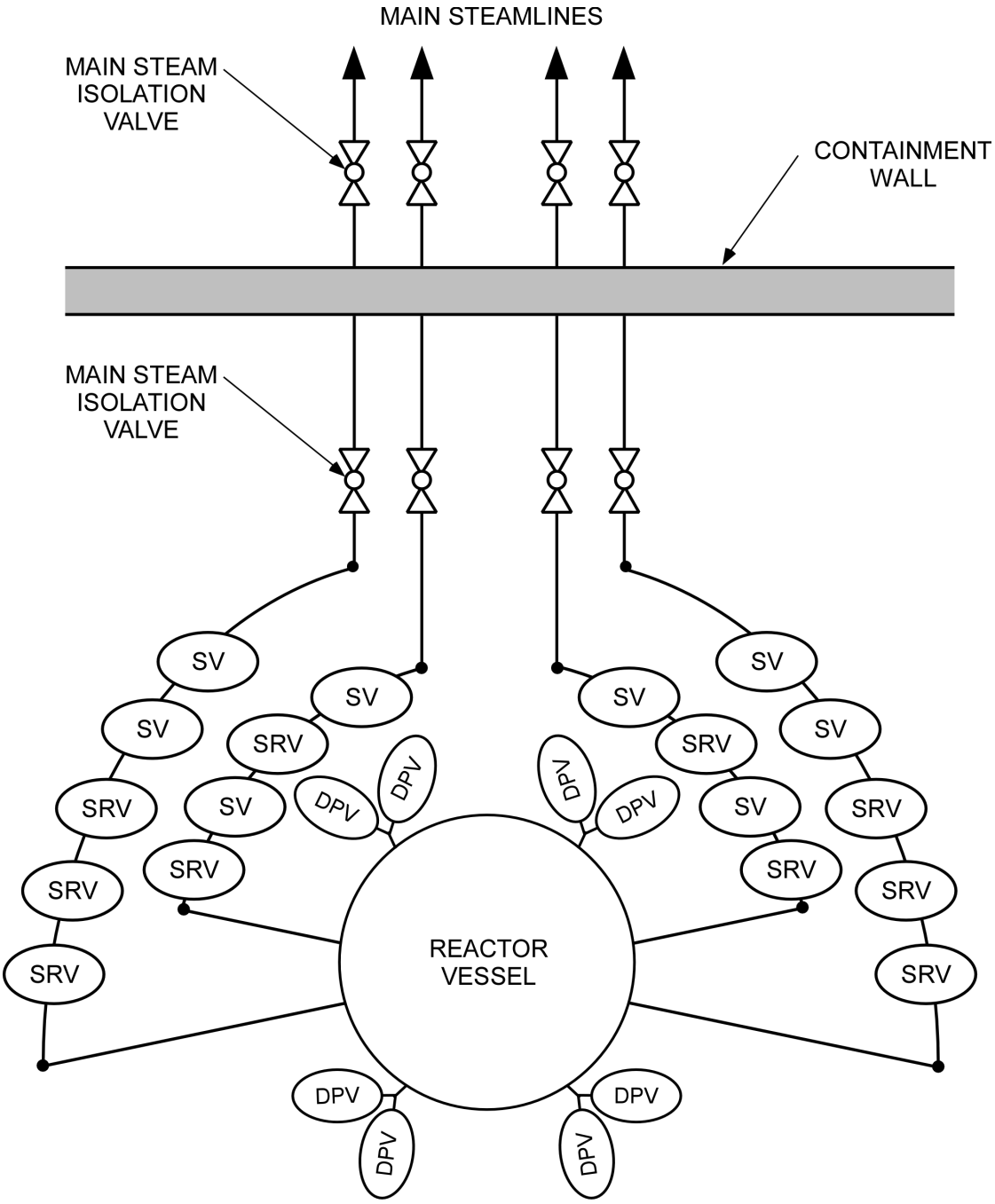

Figure 2.1.2-1. Safety Relief Valves, Depressurization Valves and Steamline Diagram

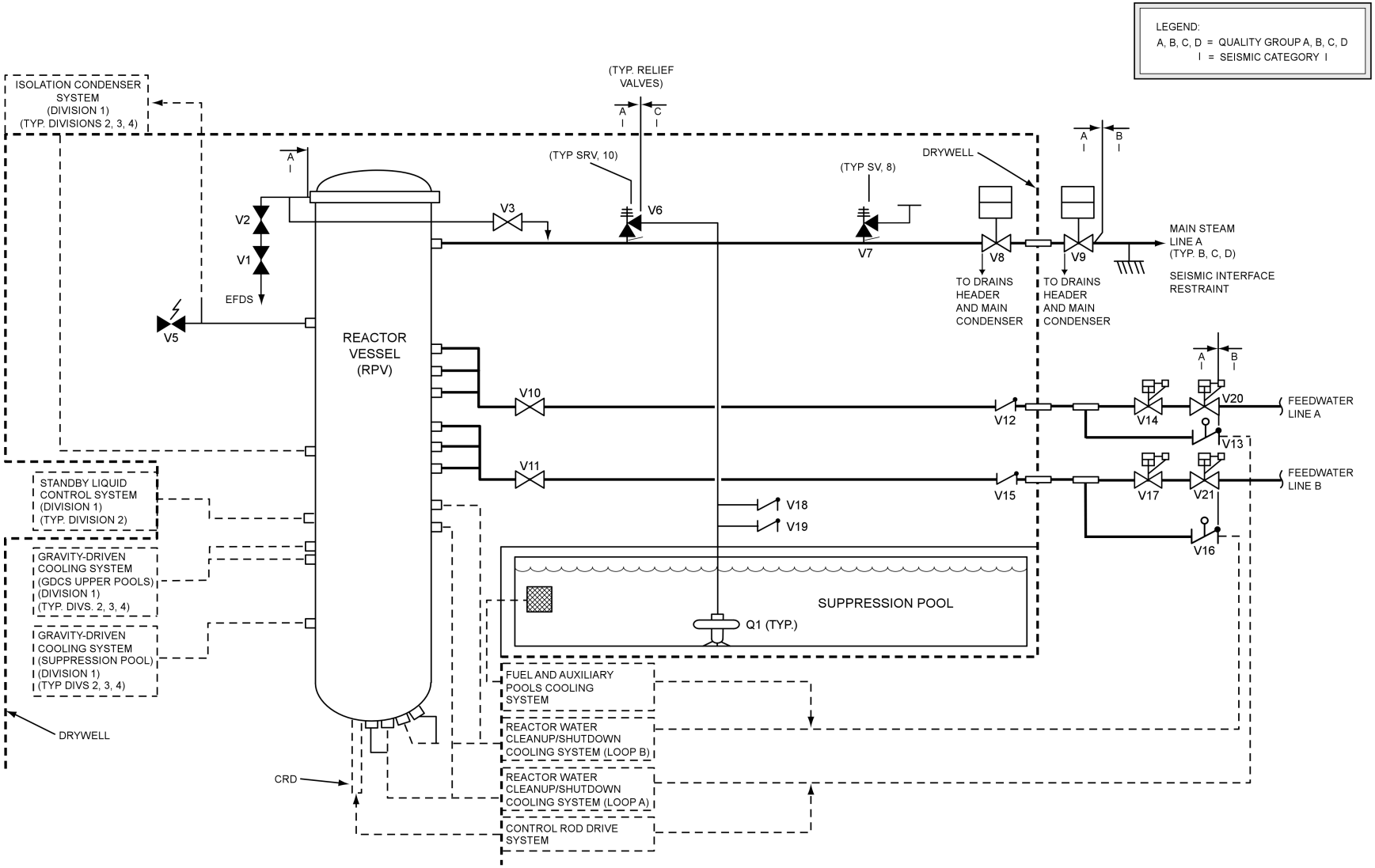

Figure 2.1.2-2. NBS Steamlines and Feedwater Lines

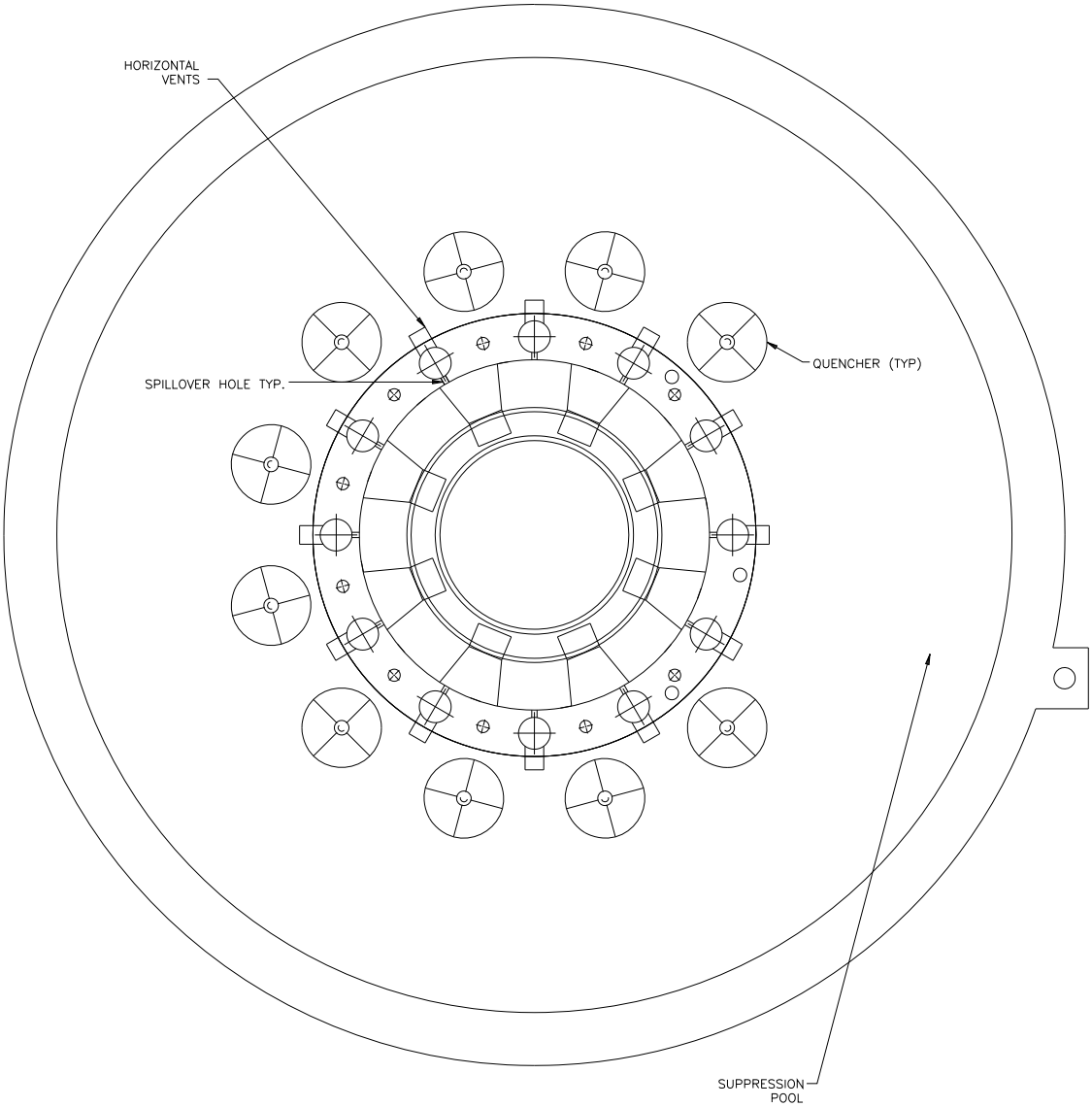

Figure 2.1.2-3. Safety-Relief Valve Discharge Line Quencher Arrangement

2.2 INSTRUMENTATION AND CONTROL SYSTEMS

The following subsections describe the major instrumentation and control (I&C) systems for the ESBWR.

2.2.1 Rod Control and Information System

Design Description

The Rod Control and Information System (RC&IS) automatically controls and monitors, and provides manual control capability for, positioning of the control rods in the reactor by the Control Rod Drive System (CRDS).

Functional Arrangement

(1) RC&IS functional arrangement is defined in Table 2.2.1-1.

(2) RC&IS is divided into major functional groups as defined in Table 2.2.1-2.

Functional Requirements

(3) RC&IS automatic functions and initiators are defined in Table 2.2.1-3.

(4) RC&IS rod block functions are defined in Table 2.2.1-4.

(5) RC&IS controls, interlocks, and bypasses are defined in Table 2.2.1-5.

(6) RC&IS minimum inventory of alarms, displays, and status indications in the main control room (MCR) are addressed in Section 3.3.

Inspections, Tests, Analyses and Acceptance Criteria

Table 2.2.1-6 defines the inspections, tests, and/or analyses, together with associated acceptance criteria for the RC&IS.

Table 2.2.1-1

RC&IS Functional Arrangement

RC&IS is dual-redundant architecture divided into major functional groups as defined in Table 2.2.1-2.
RC&IS Dedicated Operator Interface (DOI) is located in the MCR.
RC&IS equipment is located in a mild environment rooms within the Reactor Building (RB) and Control Building (CB).
RC&IS equipment is powered by separate, non-divisional AC power sources with at least one power source being a nonsafety-related uninterruptible power supply.
RC&IS equipment provides the capability to perform the FMCRD-related surveillance tests, including periodic individual CRDS HCU scram performance testing.
RC&IS is capable of continued operation when different subsystems of RC&IS are bypassed.

Table 2.2.1-2

RC&IS Major Functional Groups

Major Functional Group	Functions
Rod Control and Information System Dedicated Operator Interface (RC&IS DOI)	Provides control rod position, FMCRD status, RC&IS status, and CRDS HCU status information to the plant operator in MCR. Provides controls for performing normal rod movement functions, bypassing major RC&IS subsystems, performing CRD surveillance tests, and resetting RC&IS trips and abnormal status conditions.
Rod Action Control System (RACS)	Comprises the following subsystems: • Rod Action and Position Information (RAPI) • RAPI DOI that displays the same information that is available on the RC&IS DOI • RAPI Signal Interface Unit (SIU) • RWM • ATLM
Rod Action and Postion Information (RAPI)	Performs manual, semi-automatic, and automatic rod movement commands. Performs rod blocks, as defined in Table 2.2.1-4, based upon internal RC&IS signals from either channel: • ATLM • RWM • RAPI SIU Performs rod blocks, as defined in Table 2.2.1-4, based upon external input signals: • Safety-related RPS Reactor Mode Switch (RMS) position. • Safety-related NMS SRNM. • Safety-related NMS APRM.

Table 2.2.1-2

RC&IS Major Functional Groups

Major Functional Group	Functions
RAPI (Continued)	• Nonsafety-related NMS MRBM. • Safety-related FMCRD CR separation switches. • Nonsafety-related refueling platform position. • Nonsafety-related refueling hoist load condition. Maintains a mirror copy of the N-DCIS reference rod pull sequence (RRPS) in memory. Enforces adherence to RRPS; deviation from the RRPS causes RAPI logic to issue the following: • Issue rod block as defined in Tables 2.2.1-3 and 2.2.1-4. • Switch to RC&IS manual mode; disable automatic and semi-automatic modes of operation. • Send alarm signal to MCR that RC&IS is in manual mode. Provides control rod position and FMCRD status information to the N-DCIS, the NMS, the RWM, and the ATLM. Performs the scram-follow function. Performs the SCRRI function. Sends a SCRRI signal to the DPS to initiate the SRI function. Performs ARI motor run-in function. Sends/receives rod movement commands, rod position, CRDS FMCRD status information, and RC&IS-related status information. Sends CRDS HCU purge water valve control signals Sends and receives CRDS HCU status signals. Provides capability to perform the following CRDS surveillance tests: • Scram Time Test, • Coupling Check Test, and • Double-Notch Test.

Table 2.2.1-2

RC&IS Major Functional Groups

Major Functional Group	Functions
Rod Action and Position Information Signal Interface Unit (RAPI SIU)	Handles RAPI inter-channel communication between ATLM, RWM, and RAPI A and B channels and external communication with the nonsafety-related NMS MRBM.
Rod Worth Minimizee (RWM)	Enforces absolute rod pattern restrictions, called the Ganged Withdrawal Sequence Restrictions (GWSR) when reactor power is below the low power setpoint (LPSP) and the RPS RMS is in either the STARTUP or RUN position. Supports shutdown margin testing
Auto Thermal Limit Monitor (ATLM)	Microprocessor-based subsystem of the RC&IS Enforces Operating Limit Minimum Critical Power Ratio (OLMCPR) Enforces the Operating Limit Maximum Linear Heat Generation Rate (OLMLHGR) Issues rod withdrawal block signals Issues high-pressure FW heater bypass valves one-way block signal. Issues seventh FW heater steam heating valves one-way block signal. Initiates SCRRI/SRI functions on Loss of FW Heating
Remote Communication Cabinets (RCCs)	Houses the redundant microprocessor-based communication system that interfaces with the RAPI, MCC, and RBCC.
Motor Control Center (MCCs)	Houses the CRDS FMCRD motor controllers. Interfaces with RCC, RBCC and Emergency Rod Insertion Panel (ERIP)
Rod Brake Controller Cabinets (RBCCs)	Operates the CRDS FMCRD holding brakes Interfaces with RCC.
(Emergency Rod Insertion Control Panel (ERICP)	Located in CB. Relay-hardware based, nonsafety-related control system that alternatively commands scram follow, ARI, and SCRRI.
(Emergency Rod Insertion Panel) ERIP	Interface with the MCC FMCRD MCs.

Table 2.2.1-2

RC&IS Major Functional Groups

Major Functional Group	Functions
Scram Time Recording Panels (STRPs)	Monitors the CRDS FMCRD position switch status Automatically records and time tags CRDS FMCRD scram timing position switch status changes Transmits recorded scram timing data to the scram time recording and analysis panel (STRAP) Communicates with the RAPI
Scram Time Recording and Analysis Panel (STRAP)	Performs scram timing performance analysis
RAPI Auxiliary Panels	Open CRDS HCU purge water valve. Monitor scram valve position. Monitor CRDS HCU accumulator water pressure. Monitor CRDS HCU accumulator water level. Send data to RAPI subsystem.

Table 2.2.1-3

RC&IS Automatic Functions, Initiators, and Associated Interfacing Systems

Function	Initiator	Interfacing System
Initiate Rod Block and Terminate Rod Withdrawal (See Table 2.2.1-4 for a complete list of rod blocks.)	ATLM Operating Limit Minimum Critical Power Ratio (OLMCPR) parameter greater than or equal to setpoint.	NMS
	ATLM Operating Limit Maximum Linear Heat Generation Rate (OLMLHGR) parameter greater than or equal to setpoint.	NMS
	SRNM period greater than or equal to setpoint.	NMS
	RWM function sequence error.	NMS
	Refueling platform over core and fuel on hoist.	The RB refueling machine
	Reactor Mode Switch (RMS) in SHUTDOWN position	RPS
	CRD charging water low pressure	CRDS
	CRD charging water low-pressure trip bypass	CRDS
	RWM function parameter greater than or equal to setpoint.	NMS
	Large deviation of CR positions from RRPS in selected gang.	-
	Any attempt to withdraw an additional rod beyond the original control rod pair.	-
	RAPI trouble	-
	RAPI Signal Interface Unit trouble	-
SCRRI	Generator load rejection signal.	TGCS
	FW temperature low.	DPS

Table 2.2.1-3

RC&IS Automatic Functions, Initiators, and Associated Interfacing Systems

	Turbine trip signal.	TGCS
	SCRRI initiation signal	DPS
Rod separation detection rod block	Safety-related rod separation switches.	CRDS
Scram follow / ARI FMCRD motor run-in	See Table 2.2.7-2 for RPS scram initiating conditions and Table 2.2.14-2 for DPS scram initiating conditions.	RPS, DPS
One-way block high-pressure seventh FW heater bypass valves	ATLM issues high-pressure FW heater bypass valves one-way block	FWCS
One-way block high-pressure seventh FW heater steam heating valves one-way block	ATLM issues high-pressure seventh FW heater steam heating valves one-way block	FWCS

Table 2.2.1-4

RC&IS Rod Block Functions

Rod Block	Permissive Condition	Description
Rod separation detection	RMS: STARTUP or RUN	Rod withdrawal block only for those selected rod(s) for which the separation condition is detected and are not in the Inoperable Bypass condition.
RMS in SHUTDOWN position	RMS: SHUTDOWN	Rod withdrawal block for all control rods.
SRNM withdrawal block	RMS: SHUTDOWN, REFUEL, or STARTUP	Rod withdrawal block for all control rods.
APRM withdrawal block	None	Rod withdrawal block for all control rods.
CRD charging water low pressure	None	Rod withdrawal block for all control rods.
CRD charging water low-pressure trip bypass	None	Rod withdrawal block for all control rods.
RWM withdrawal block	Reactor power less than setpoint	Rod withdrawal block for all control rods.
RWM insert block	Reactor power less than setpoint	Rod insertion block for all control rods.
ATLM withdrawal block	Reactor power greater than setpoint	Rod withdrawal block for all control rods.
MRBM withdrawal block	Reactor power greater than setpoint	Rod withdrawal block for all control rods.
Gang large deviation	RC&IS Mode Switch: GANG:	Rod withdrawal block for all operable control rods of the selected gang upon detection of: – Large deviation of CR positions from RRPS in selected gang. – Any attempt to withdraw an additional rod beyond the original control rod pair.

Table 2.2.1-4

RC&IS Rod Block Functions

Rod Block	Permissive Condition	Description
Refuel mode withdrawal block	RMS: REFUEL, refueling platform over RPV, and fuel bundle on crane	Rod withdrawal block for all control rods.
Startup mode withdrawal block	RMS: STARTUP and refueling platform over RPV	Rod withdrawal block for all control rods.
RAPI trouble	RRPS active	Rod withdrawal block and rod insertion block for all control rods.
RAPI Signal Interface Unit trouble	None	Rod withdrawal block for all control rods when difference detected between any pair of input or output A and B channels.
Electrical group power abnormal	None	Rod withdrawal block and rod insertion block for all control rods.

Table 2.2.1-5

RC&IS Controls, Interlocks, and Bypasses

Function	Description
Control	Single / Ganged mode selection.
	Automatic / semi-automatic / manual mode selection.
	Normal / notch / continuous CR movement mode
	Insert / Withdraw.
	SCRRI/SRI manual initiation.
	ARI manual initiation (DPS)
Interlock	Single / Dual Rod Sequence Restriction Override (S/DRSRO) allows an operator to place up to two CR associated with the same HCU in S/DRSRO for scram time surveillance testing.
	Rod Inoperable Bypass condition allows up to 8 CR to be selected with the Reactor Mode Switch (RMS) in RUN position (RPS).
	Rod Inoperable Bypass condition allows up to 54 CR to be selected with the RMS in REFUEL position (RPS).
Bypass	Rod position detector channel bypass.
	S/DRSRO.
	Rod Inoperable Bypass selection.
	RCC (communication) channel bypasses.
	ATLM channel bypass.
	RWM channel bypass.
	RAPI channel bypass.

Table 2.2.1-6

ITAAC For Rod Control and Information System

Design Commitment	Inspections, Tests, Analyses	Acceptance Criteria
1. RC&IS functional arrangement is defined in Table 2.2.1-1.	Test(s) and inspection(s) of the as-built system will be performed.	Test and inspection report(s) document that the as-built system conforms with the functional arrangement defined in Table 2.2.1-1.
2. RC&IS is divided into major functional groups as defined in Table 2.2.1-2.	Test(s) and inspection(s) of the as-built system will be performed.	Test and inspection report(s) document that the as-built system is divided into major functional groups as defined in Table 2.2.1-2.
3. RC&IS automatic functions, initiators, and associated interfacing systems are defined in Table 2.2.1-3.	Test(s) and type test(s) will be performed for the initiators on the as-built RC&IS using simulated signals to perform automatic functions listed in Table 2.2.1-3.	Test and type test report(s) document that the RC&IS is capable of performing the functions for the initiators as defined in Table 2.2.1-3.
4. RC&IS rod block functions and the permissive conditions under which the rod block is active are defined in Table 2.2.1-4.	Test(s) and type test(s) will be performed using simulated signals and manual actions to confirm that the rod withdrawal and insertion commands are blocked as defined in Table 2.2.1-4.	Test and type test report(s) document that the rod block functions defined in Table 2.2.1-4 are performed in response to simulated signals and manual actions.
5. RC&IS controls, interlocks, and bypasses are defined in Table 2.2.1-5.	Inspection(s), test(s) and type test(s) will be performed on the as-built system using simulated signals and manual actions.	Inspection, test and type test report(s) document that the system controls, interlocks, and bypasses exist, can be retrieved in the main control room, or are performed in response to simulated signals and manual actions as defined in Table 2.2.1-5.

Table 2.2.1-6

ITAAC For Rod Control and Information System

Design Commitment	Inspections, Tests, Analyses	Acceptance Criteria
6. RC&IS minimum inventory of alarms, displays, and status indications in the main control room (MCR) are addressed in Section 3.3.	See Section 3.3.	See Section 3.3.

Figure 2.2.1-1. Deleted

2.2.2 Control Rod Drive System

Design Description

The control rod drive (CRD) system, manually and automatically upon command from the RPS, DPS, and RC&IS, executes rapid control rod (CR) insertion (scram), performs fine CR positioning (reactivity control), detects CR separation (prevent rod drop accident), limits the rate of CR ejection due to a break in the CR pressure boundary (prevent fuel damage), and supplies high pressure makeup water to the reactor during events in which the feedwater system is unable to maintain reactor water level.

Functional Arrangement

(1) The functional arrangement of the CRD System comprises three major functional groups: fine motion control rod drive (FMCRD), hydraulic control unit (HCU), and CRD hydraulic subsystem (CRDHS), as defined in Table 2.2.2-1 and shown in Figure 2.2.2-1.

Functional Requirements

(2) ASME Code Section III

a1. The components identified in Table 2.2.2-5 as ASME Code Section III are designed in accordance with ASME Code Section III requirements and seismic Category I requirements.

a2. The components identified in Table 2.2.2-5 as ASME Code Section III shall be reconciled with the design requirements.

a3. The components identified in Table 2.2.2-5 as ASME Code Section III are fabricated, installed, and inspected in accordance with ASME Code Section III requirements.

b1. The piping identified in Table 2.2.2-5 as ASME Code Section III is designed in accordance with ASME Code Section III requirements and seismic Category I requirements.

b2. The as-built piping identified in Table 2.2.2-5 as ASME Code Section III shall be reconciled with the with the piping design requirements.

b3. The piping identified in Table 2.2.2-5 as ASME Code Section III is fabricated, installed, and inspected in accordance with ASME Code Section III requirements.

(3) Pressure Boundary Welds

c. Pressure boundary welds in components defined in Table 2.2.2-5 as ASME Code Section III meet ASME Code Section III requirements.

d. Pressure boundary welds in piping defined in Table 2.2.2-5 as ASME Code Section III meet ASME Code Section III requirements.

(4) Pressure Boundary Integrity

a. The components defined in Table 2.2.2-5 as ASME Code Section III retain their pressure boundary integrity at their design pressure.

b. The piping defined in Table 2.2.2-5 as ASME Code Section III retains its pressure boundary integrity at design pressure.

(5) The Seismic Category I equipment defined in Table 2.2.2-1 can withstand seismic design basis loads without loss of structural integrity and safety function.

(6) The FMCRD is capable of positioning CR incrementally and continuously over its entire range.

(7) Valves defined in Table 2.2.2-5 and 2.2.2-6 as having an active safety-related function open, close, or both open and close under differential pressure, fluid flow, and temperature conditions.

(8) The HPCRD has a high-pressure makeup mode of operation that injects water to the RPV via the RWCU/SDC return path.

(9) CRD system automatic functions, initiators, and associated interfacing systems are defined in Table 2.2.2-3.

(10) CRD system controls and interlocks are defined in Table 2.2.2-4.

(11) CRD system minimum inventory of alarms, displays, controls, and status indications in the main control room are addressed in Section 3.3.

(12) CRD maximum allowable scram times are defined in Table 2.2.2-2.

(13) Conformance with IEEE Std. 603 requirements by the safety-related control system structures, systems, and components defined in Tier 1 Tables 2.2.2-1 and 2.2.2-6 is addressed in Subsection 2.2.15.

(14) The equipment qualification of CRDS components defined in Tables 2.2.2-1, 2.2.2-5, and 2.2.2-6, is addressed in Section 3.8.

(15) The FMCRD has an electro-mechanical brake with a minimum required holding torque on the motor drive shaft.

Inspections, Tests, Analyses and Acceptance Criteria

Table 2.2.2-7 defines the inspections, tests, and/or analyses, together with associated acceptance criteria for the CRD system.

Table 2.2.2-1

CRDS Functional Arrangement

FMCRDs, including the equipment defined in Table 2.2.2-5 and 2.2.2-6, are safety-related, Seismic Category I.
FMCRDs are capable of rapid hydraulic insertion of the CRs during ATWS peak reactor pressure transient.
FMCRDs are capable of maintaining RCPB continuously at the RPV design pressure and briefly during the ATWS peak reactor pressure transient.
FMCRDs have continuous CR position indication sensors that detect CR position based on motor rotation.
FMCRDs have scram position indication switches that detect intermediate and scram completion CR positions.
FMCRDs have a bayonet CR coupling mechanism that requires a minimum rotation to decouple.
FMCRD rotation, sufficient to decouple the CR, is precluded when fuel bundles are present.
FMCRDs have spring-loaded latches in the hollow piston that engage slots in the guide tube to prevent rotation of the bayonet coupling except at predefined positions.
FMCRDs have redundant safety-related rod separation switches that detect separation of the FMCRD from the CR.
FMCRDs have a magnetic coupling that provides seal-less, leak-free operation of the CRD mechanism.
FMCRDs have safety-related holding brakes that engage on loss of power.
FMCRDd have safety-related scram inlet port check valves that close under reverse flow.
FMCRD have passive safety-related integral internal blowout support that prevents ejection of the FMCRD and the attached control rod.
FMCRD hydraulic scram feature moves a CR pair (except for one single CR) to defined scram positions, starting from loss of signal to the scram solenoid pilot valves in the HCUs, using only the stored energy in the CRDS HCU scram accumulators, in time spans equal to or less than the times defined in Table 2.2.2-2.
HCUs are safety-related, Seismic Category I.
HCUs are located in four dedicated rooms in the Reactor Building (RB).

Table 2.2.2-1

CRDS Functional Arrangement

HCU scram charging water header pressure instrumentation is safety-related, Seismic Category I.
HCU scram pilot solenoid valves transfer open to vent on loss of power to both solenoids.
HCU air header dump valves transfer open to vent on loss of power.
HCU ARI solenoid valves are closed on loss of power and transfer open to vent when energized.
Each HCU contains a nitrogen-water accumulator charged to a sufficiently high pressure and with the necessary valves and components to fully insert two CRs.
HCUs provide a flow path for purge water to the associated FMCRDs during normal operation.
HCU scram accumulators are continuously monitored for water leakage by level instruments.
HCU have a test port to allow connection of temporary test equipment for the conduct of FMCRD ball check valve testing and drive friction testing.
CRDHS FMCRD purge water header, HCU charging header, and scram air header, are classified Seismic Category II.
Divisional safety-related power supplies power safety-related FMCRD and HCU equipment.

Table 2.2.2-2

CRD Maximum Allowable Scram Times for

Vessel Bottom Pressures Below 7.481 MPa gauge (1085 psig)

Percent Insertion	Time (sec)
10	0.34
40	0.80
60	1.15
100	2.23

Table 2.2.2-3

CRD System Automatic Functions, Initiators, and Associated Interfacing Systems

Function	Initiator	Interfacing System
Hydraulic scram	RPS scram signal	RPS and DPS
Scram follow/ARI motor run-in	RPS scram signal / DPS scram signal	RPS and DPS
Provide make up water to RPV	RPV water level low (L2)	NBS
SCRRI (electric)	SCRRI signals	RC&IS and DPS
ARI (hydraulic)	DPS ARI signal	DPS
SRI (hydraulic)	DPS SRI signals	DPS

Table 2.2.2-4

CRD System Controls and Interlocks

Parameter	Description
Control	Manual start (CRD pumps)
Interlock	High-pressure makeup mode (RPV water level low (Level 2)) • The standby CRD pump is started. Both pumps operate in parallel to deliver the required makeup flow capacity to the reactor. • The two pump suction filter bypass valves are opened. • The charging water header isolation valve and purge water header isolation valve are closed. • The pump minimum flow bypass line isolation valve closes. • The flow control valves in the high-pressure makeup lines open to regulate the makeup water flow rate to the reactor. • The test valve in the high-pressure makeup line to the RWCU/SDC system opens if it is closed at the start of the event and the test valve in the return line to the CST closes if it is open at the start of the event. • The high-pressure makeup flow control valves close to stop flow to the reactor at high reactor water Level 8. • The pump minimum flow bypass line isolation valve opens and both pumps continue to operate in a low flow condition by directing their flow back to the CST through the pump minimum flow lines.

Table 2.2.2-4(Continued)

CRD System Controls and Interlocks

Parameter	Description
	• The control valves reopen and the pump minimum flow bypass isolation valve closes to restart high-pressure makeup flow if a subsequent Level 2 signal should occur. Normal operation mode (CRD common pump discharge line pressure low) • Start standby CRD pump. Normal operation mode (CRD pump inlet pressure low) • Trip running CRD pump after expiration of an adjustable time delay. Normal operation mode (pump lube oil pressure low) • Trip running CRD pumps and remove CRD pump start permissive condition. Normal operation mode (rod separation detection) • Send individual rod block initiate signal to RC&IS. Normal operation mode (scram charging header pressure low) • Send all rods block initiate signal to RC&IS. Normal operation mode (rod gang misalignment) • Send all rods in gang block initiate signal to RC&IS. High-pressure makeup mode (inboard FW maintenance valve closed) • Inhibit opening (hp makeup water) injection valves. High-pressure makeup mode (at least 2 GDCS pool levels low) • Trip CRD pumps. CRD common pump discharge line pressure low • Starts the standby pump.

Table 2.2.2-4(Continued)

CRD System Controls and Interlocks

Parameter	Description
	CRD common pump discharge line flow • Modulates purge water control valves. Injection flow • Modulates injection valves.

Table 2.2.2-5

Control Rod Drive System Mechanical Equipment

Equipment Name (Description)	Equipment Identifier See Figure 2.2.2-1	ASME Code Section III	Seismic Cat. I	RCPB Component	Functional Capability Required	MCR Alarms
FMCRD components required for scram	FMCRD	No	Yes	No	Active	-
FMCRD reactor coolant primary pressure boundary components	FMCRD	Yes	Yes	Yes	-	-
HCU components required for scram	HCU	No	Yes	No	Active	1. HCU gas pressure low 2. HCU accumulator leakage high
Scram inlet piping	-	Yes	Yes	No	-	-
Internal drive housing supports	-	-	Yes	No	-	-
FMCRD magnetic coupling	FMCRD	-	Yes	No	Passive	-
FMCRD ball check valves	FMCRD	-	Yes	No	Active	-
HCU charging water supply line check valve	HCU	Yes	Yes	No	Active	-
HCU purge water supply line check valve	HCU	Yes	Yes	No	Active	-

Table 2.2.2-6

Control Rod Drive System Electrical Equipment

Equipment Name (Description)	Equipment Identifier See Figure 2.2.2-1	Control Q-DCIS/ DPS See Note 1	Seismic Category I	Safety-Related	Safety-Related Display	Active Safety Function	Loss of Motive Power Position	Remotely Operated Valve
HCU scram solenoid pilot valves	SSPV	Yes	Yes	Yes	Associated scram valve position status	Energize to apply air to HCU scram valve	Vent HCU scram valve	By RPS system logic
FMCRD passive holding brakes	FMCRD	No	Yes	Yes	Yes	Release brake	Apply brake	-
HCU charging water header pressure transmitters	Div 1-4	Yes	Yes	Yes	MCR alarm	-	-	-
FMCRD separation switches	FMCRD	Yes	Yes	Yes	MCR alarm	-	-	-

NOTE 1: See Tables 2.2.2-3, 2.2.2-4, and 2.2.2-5 for control functions and initiating conditions.

Table 2.2.2-7

ITAAC For Control Rod Drive System

Design Commitment	Inspections, Tests, Analyses	Acceptance Criteria
1. The functional arrangement of the CRD System comprises three major functional groups: fine motion control rod drive (FMCRD), hydraulic control unit (HCU), and CRD hydraulic subsystem (CRDHS), as defined in Table 2.2.2-1 and shown in Figure 2.2.2-1.	Inspection(s), test(s), and type test(s) of the as-built system will be conducted.	A report exists that documents the results of inspection(s), test(s), and type test(s) that confirm the functional arrangement defined in Table 2.2.2-1 and as shown in Figure 2.2.2-1. For components and piping identified in Table 2.2.2-5 as ASME Code Section III, this report is an ASME Code report.
2. ASME Code Section III a1. The components indentified in Table 2.2.2-5 as ASME Code Section III are designed in accordance with ASME Code Section III requirements and Seismic Category I requirements.	Inspection of ASME Code Design Reports (NCA-3350) and required documents will be conducted.	ASME Code Design Reports (NCA-3550) (certified, when required by ASME Code) conclude that the design of the CRD system components identified in Table 2.2.2-5 as ASME Code Section III complies with the requirements of the ASME Code, Section III, including for those stresses and loads related to fatigue (including environmental effects), thermal expansion, seismic, and combined.

Table 2.2.2-7

ITAAC For Control Rod Drive System

Design Commitment	Inspections, Tests, Analyses	Acceptance Criteria
a2. The components identified in Table 2.2.2-5 as ASME Code Section III are designed, fabricated, installed, and inspected in accordance with ASME Code Section III requirements.	Inspection of certified documents for as-built components will be conducted.	An ASME Code Design Report (certified, when required by ASME Code) exists and concludes that design reconciliation has been completed in accordance with the ASME Code for as-built reconciliation of the CRD system components identified in Table 2.2.2-1 as ASME Code Section III. The report documents the results of the reconciliation analysis.
b1. The piping defined in Table 2.2.2-5 as ASME Code Section III are designed, fabricated, installed, and inspected in accordance with ASME Code Section III requirements.	Inspection of ASME Code certified Design Reports (NCA-3550) and required documents will be conducted.	ASME Code certified Design Reports (NCA-3550) (certified, when required by ASME Code) conclude that the design of the CRD system piping identified in Table 2.2.2-5 as ASME Code Section III complies with the requirements of the ASME Code, Section III, including for those stresses and loads related to fatigue (including environmental effects), thermal expansion, seismic, and combined. {{Design Acceptance Criteria}}

Table 2.2.2-7

ITAAC For Control Rod Drive System

Design Commitment	Inspections, Tests, Analyses	Acceptance Criteria
b2. The as-built piping identified in Table 2.2.2-5 as ASME Code Section III shall be reconciled with the with the piping design requirements.	A reconciliation analysis of the piping using the as-designed and as-built information and ASME Code certified Design Reports (NCA-3550) will be performed.	An ASME Code Design Report (certified, when required by ASME Code) exists and concludes that design reconciliation has been completed in accordance with the ASME Code for as-built reconciliation of the CRD system piping identified in Table 2.2.2-5 as ASME Code Section III. The report documents the results of the reconciliation analysis.
b3. The piping identified in Table 2.2.2-5 as ASME Code Section III is fabricated, installed, and inspected in accordance with ASME Code Section III requirements.	Inspections of the piping will be conducted.	ASME Code Data Reports (certified, when required by ASME Code) and inspection reports (including N-5 Data Reports where applicable) document that the piping identified in Table 2.2.2-5 as ASME Code Section III is fabricated, installed, and inspected in accordance with ASME Code Section III requirements.
3. Pressure Boundary Welds a. Pressure boundary welds in components identified in Table 2.2.2-5 as ASME Code Section III meet ASME Code Section III requirements.	Inspection of the as-built pressure boundary welds will be performed in accordance with the ASME Code Section III.	An ASME Code Report exists and concludes that the ASME Code Section III requirements are met for non-destructive examination of pressure boundary welds in the CRD System.

Table 2.2.2-7

ITAAC For Control Rod Drive System

Design Commitment	Inspections, Tests, Analyses	Acceptance Criteria
b. Pressure boundary welds in piping defined in Table 2.2.2-5 as ASME Code Section III meet ASME Code Section III requirements.	Inspection of the as-built pressure boundary welds will be performed in accordance with the ASME Code Section III.	An ASME Code Report exists and concludes that the ASME Code Section III requirements are met for non-destructive examination of pressure boundary welds in the CRD System.
4. Pressure Boundary Integrity		
a. The components defined in Table 2.2.2-5 as ASME Code Section III retain their pressure boundary integrity at their design pressure.	A hydrostatic test will be conducted on those code components of the CRD System required to be hydrostatically tested by the ASME code.	An ASME Code Report exists and concludes that the results of the hydrostatic test of the ASME Code components of the CRD System comply with the requirements of the ASME Code Section III.
b. The piping defined in Table 2.2.2-5 as ASME Code Section III retain its pressure boundary integrity at its design pressure.	A hydrostatic test will be conducted on the code piping of the CRD System required to be hydrostatically tested by the ASME code.	An ASME Code Report exists and concludes that the results of the hydrostatic test of the ASME Code piping of the CRD System comply with the requirements of the ASME Code Section III.
5. The Seismic Category I equipment defined in Table 2.2.2-1, 2.2.2-5, and 2.2.2-6, can withstand seismic design basis loads without loss of structural integrity and safety function.	a) Type tests and/or analyses of Seismic Category I equipment will be performed.	a) Report(s) document(s) that the Seismic Category I equipment can withstand seismic design basis dynamic loads without loss of structural integrity and safety function.

Table 2.2.2-7

ITAAC For Control Rod Drive System

Design Commitment	Inspections, Tests, Analyses	Acceptance Criteria
	b) Inspections will be performed for the existence of a report verifying that the as-installed equipment including anchorage is seismically bounded by the tested or analyzed conditions. c) Inspections of the equipment defined in Table 2.2.1-1, 2.2.2-5, and 2.2.2-6, will be performed to verify that the equipment is housed in Seismic Category I structures.	b) The as-built equipment including anchorage is seismically bounded by the tested or analyzed conditions. c) The Seismic Category I equipment defined in Table 2.2.1-1, 2.2.2-5, and 2.2.2-6, is housed in a Seismic Category I structure.
6. The FMCRD is capable of positioning CR incrementally and continuously over its entire range.	Type test(s) will be performed of the motor run-in and withdrawal function on the FMCRD using a simulated CR.	Type test report(s) document that FMCRD is capable of positioning CR incrementally in minimum increments of 36.] mm (1.44 in.) and continuously over its entire range at a speed of 28 ± 5 mm/sec.
7. Valves defined in Table 2.2.2-5 and 2.2.2-6 as having an active safety-related function open, close, or both open and close under differential pressure, fluid flow, and temperature conditions.	Tests of installed valves will be performed for opening, closing, or both opening and closing under system preoperational differential pressure, fluid flow, and temperature conditions.	Test report(s) document that, upon receipt of the actuating signal, each valve opens, closes, or both opens and closes, depending upon the valve's safety function.
8. The HPCRD has a high-pressure makeup mode of operation that injects water to the RPV via the RWCU/SDC return path.	Test(s) of the HPCRD high-pressure makeup mode of operation will be conducted on the as-built system verifying that water is injected to the RPV via the RWCU/SDC return path.	Test report(s) document that the HPCRD high-pressure makeup mode of operation injects water to the RPV via the RWCU/SDC return path.

Table 2.2.2-7

ITAAC For Control Rod Drive System

Design Commitment	Inspections, Tests, Analyses	Acceptance Criteria
9. CRD system automatic functions, initiators, and associated interfacing systems are defined in Table 2.2.2-3.	Inspections will be performed to verify that the as-built CRD system conforms with the automatic functions, initiators, and associated interfacing systems defined in Table 2.2.2-3. Test(s) and type test(s) will be performed on the as-built system using simulated signals initiated from all of the associated interfacing as-built systems specified in Table 2.2.2-3..	Inspection report(s) document that the as-built CRD system conforms with the automatic functions, initiators, and associated interfacing systems defined in Table 2.2.2-3. Test and type test report(s) document the system is capable of performing the functions defined in Table 2.2.2-3 using simulated signals initiated from all of the associated interfacing as-built systems specified in Table 2.2.2-3.
10. CRD system controls and interlocks are defined in Table 2.2.2-4.	Test(s) and type test(s) will be performed on the as-built system using simulated signals.	Test and type test report(s) document that the system controls and interlocks exist, can be retrieved in the main control room, or are performed in response to simulated signals and manual actions as defined in Table 2.2.2-4.
11. CRD system minimum inventory of alarms, displays, controls, and status indications in the main control room are addressed in Section 3.3.	See Section 3.3.	See Section 3.3.
12. CRD maximum allowable scram times are defined in Table 2.2.2-2.	Test(s) will be performed of each CRD control rod pair scram function using simulated signals.	Test report(s) document that scram times for each control rod pair are less than or equal to the maximum allowable scram times defined in Table 2.2.2-2.

Table 2.2.2-7

ITAAC For Control Rod Drive System

Design Commitment	Inspections, Tests, Analyses	Acceptance Criteria
13. Conformance with IEEE Std. 603 requirements by the safety-related control system structures, systems, and components defined in Tables 2.2.2-1, 2.2.2-5, and 2.2.2-6, is addressed in Subsection 2.2.15.	See Subsection 2.2.15.	See Subsection 2.2.15.
14. The equipment qualification of CRDS components defined in Tables 2.2.2-1, 2.2.2-5, and 2.2.2-6, is addressed in Section 3.8.	See Section 3.8.	See Section 3.8.
15. The FMCRD has an electro-mechanical brake with a minimum required holding torque on the motor drive shaft.	Tests of each FMCRD brake will be conducted in a test facility	The FMCRD electro-mechanical brake has a minimum required holding torque of 49 N. m (36 ft-lb_f) on the motor drive shaft.

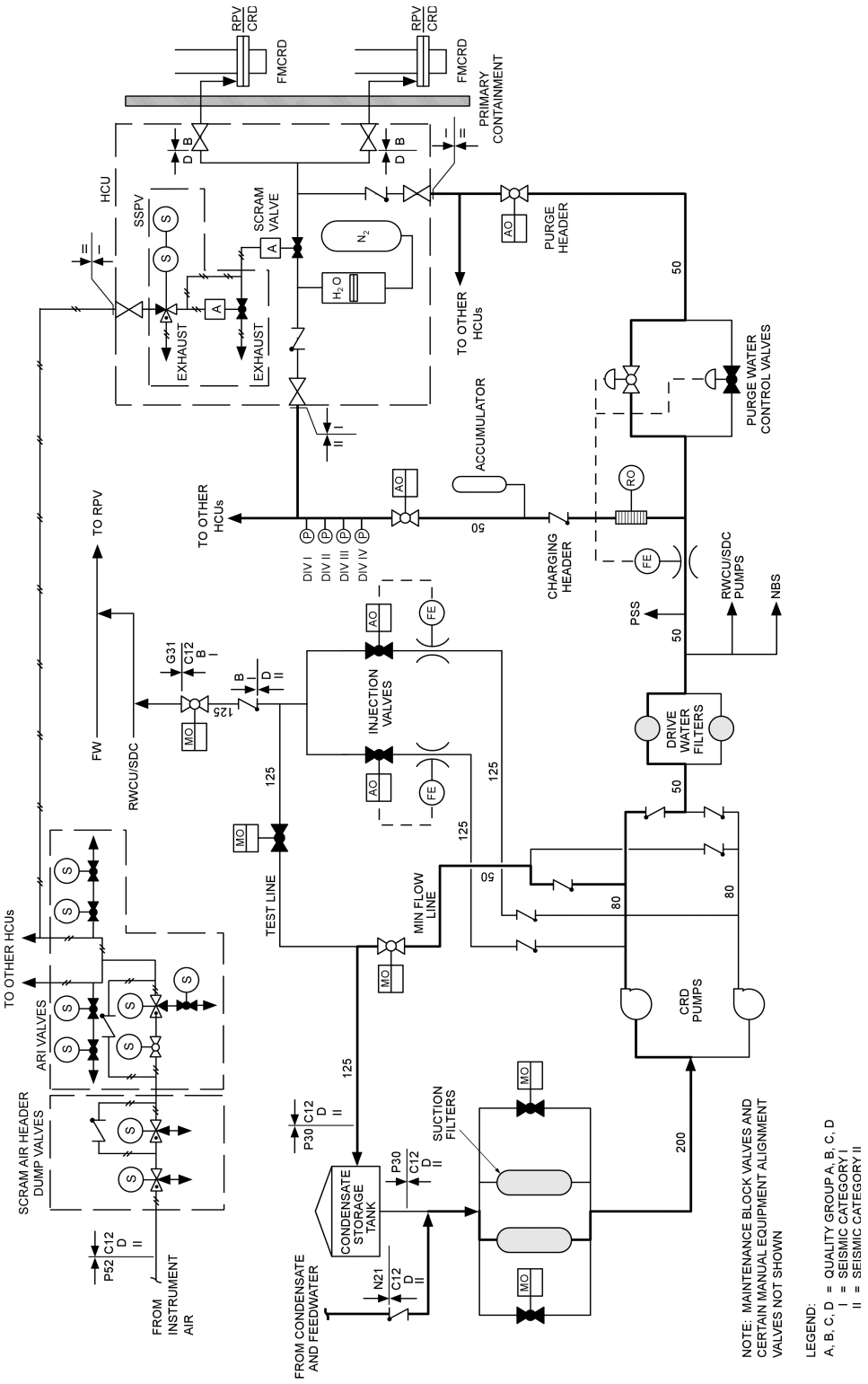

Figure 2.2.2-1. Control Rod Drive System

2.2.3 Feedwater Control System

Design Description

The Feedwater Control System (FWCS), automatically or manually, controls RPV water level by modulating the supply of feedwater flow to the RPV, the low flow control valve (LFCV), individual reactor feed pump ASD, or the RWCU/SDC system overboard control valve (OBCV).

The FWCS changes reactor power by automatically or manually controlling FW temperature by modulating the 7th FW heater steam heating valves or the high-pressure FW heater bypass valves.

Functional Arrangement

(1) FWCS functional arrangement is defined in Table 2.2.3-1.

Functional Requirements

(2) FWCS automatic functions, initiators, and associated interfacing systems are defined in Table 2.2.3-2.

(3) FWCS controls are defined in Table 2.2.3-3.

(4) FWCS minimum inventory of alarms, displays, controls and status indications in the main control room are addressed in Table 3.3-1, Item 6.

(5) FWCS controllers are fault tolerant.

Inspections, Tests, Analyses and Acceptance Criteria

Table 2.2.3-4 defines the inspections, tests, and/or analyses, together with associated acceptance criteria for the FWCS.

Table 2.2.3-1

FWCS Functional Arrangment

FWCS is nonsafety-related.
FWCS uses triple-redundant, fault tolerant digital controllers (FTDC)

Table 2.2.3-2

FWCS Automatic Functions, Initiators, and Associated Interfacing Systems

Functions	Initiators	Interfacing System
Perform FW runback	RPV water level high (Level 8)	NBS
Deleted		
Reduce speed of other FW pumps	FW flow high on one FW pump run-out	-
Start standby reactor feed pump	Reactor feed pump trip	-
Open the steam line condensate drain valves	Steam flow less than predefined value of rated flow	-
Deleted		
Deleted		
Deleted		
Perform FW runback and close the LFCV and the RWCU/SDC overboard flow control valve	ATWS trip signal	DPS
One-way block high-pressure FW heater bypass valves	ATLM issues high-pressure FW heater bypass valves one-way block signal	RC&IS
One-way block seventh FW heater steam heating valves	ATLM issues seventh FW heater steam heating valves one-way block signal	RC&IS

Table 2.2.3-3

FWCS Controls

Parameter	Description
RPV Level Control	Manual speed control (reactor feed pump) Manual start/stop (reactor feed pump) Automatic / manual mode (reactor feed pump control) Manual control (high pressure FW heater string bypass valves and isolation valves) • Automatic Control Modes: Single element control: (enable at predefined value below rated reactor power) RPV water level: • Modulate either the low flow control valve (LFCV) or individual reactor feed pump ASD. • Modulate RWCU/SDC system overboard control valve (OBCV) Three element control: (enable during normal power operation) Three process variables generate master feedwater flow demand signal (for output to individual reactor feed pump loop trim controller): • Total steam flow • Total FW flow • RPV water level Reactor feed pump loop trim controller output plus master feewater flow controller output modulates individual reactor feed pump ASD: • Master FW flow demand signal • Individual reactor feed pump flow signals
FW Temperature Control	Manual mode: FW temperature setpoint set by operator Automatic mode: FW temperature setpoint is provided by PAS • Modulate FW heater No. 7 steam inlet valves • Modulate HP FW Heaters bypass valves

Table 2.2.3-4

ITAAC For Feedwater Control System

Design Commitment	Inspections, Tests, Analyses	Acceptance Criteria
1. The FWCS functional arrangement is defined in Table 2.2.3-1.	Inspections and tests will be performed on the FWCS functional arrangement using simulated signals and simulated actuators.	Inspection and test report(s) document(s) that FWCS functional arrangement is as defined in Table 2.2.3-1.
2. FWCS automatic functions, initiators, and associated interfacing systems are defined in Table 2.2.3-2.	Test(s) and type test(s) will be performed on the as-built system using simulated signals.	Test and type test report(s) document the system performs the functions defined in Table 2.2.3-2.
3. FWCS controls are defined in Table 2.2.3-3.	Inspection(s), test(s) and type test(s) will be performed on the as-built system using simulated signals and manual actions.	Test and type test report(s) document that the system controls and interlocks exist, can be retrieved in the main control room, or are performed in response to simulated signals and manual actions as defined in Table 2.2.3-3.
4. FWCS minimum inventory of alarms, displays, controls and status indications in the main control room are addressed in Table 3.3-1, Item 6.	See Table 3.3-1, Item 6.	See Table 3.3-1, Item 6.
5. FWCS controllers are fault tolerant.	a. Test(s) will be performed simulating failure of each FWCS temperature controller. b. Test(s) will be performed simulating failure of each FWCS level controller.	a. Test and type test report(s) document that failure of any one FWCS temperature controller will not affect FWCS output. b. Test and type test report(s) document that failure of any one FWCS level controller will not affect FWCS output.

Figure 2.2.3-1. Deleted

2.2.4 Standby Liquid Control System

Design Description

The Standby Liquid Control (SLC) system is an alternative means to reduce core reactivity to ensure complete shutdown of the reactor core from the most reactive conditions at any time in core life, and provides makeup water to the RPV to mitigate the consequences of a Loss-of-Coolant-Accident (LOCA).

Functional Arrangement

(1) The SLC system functional arrangement is defined in Table 2.2.4-1 and shown in Figure 2.2.4-1.

Functional Requirements

(2) The SLC system automatic functions, initiators, and associated interfacing systems are defined in Table 2.2.4-2.

(3) The SLC system controls and interlocks are defined in Table 2.2.4-3.

(4) The SLC system minimum inventory of alarms, displays, and status indications in the main control room (MCR) are addressed in Section 3.3.

(5) Conformance with IEEE Std. 603 requirements by the safety-related control system structures, systems, and components defined in Table 2.2.4-1 is addressed in Subsection 2.2.15.

(6) The equipment qualification of SLC system components defined in Table 2.2.4-1 is addressed in Section 3.8.

(7) During an ATWS, the SLC system shall be capable of injecting borated water into the RPV at flowrates that assure rapid power reduction.

(8) The SLC system shall be capable of injecting borated water for use as makeup water to the RPV in response to a Loss-of-Coolant-Accident (LOCA).

(9) The redundant injection shut-off valves shown in Figure 2.2.4-1 as V1, V2, V3, and V4 are automatically closed by low accumulator level signals from the respective accumulator.

(10) ASME Code Section III

a1. The components identified in Table 2.2.4-4 as ASME Code Section III are designed in accordance with ASME Code Section III requirements and seismic Category I requirements.

a2. The components identified in Table 2.2.4-4 as ASME Code Section III shall be reconciled with the design requirements.

a3. The components identified in Table 2.2.4-4 as ASME Code Section III are fabricated, installed, and inspected in accordance with ASME Code Section III requirements.

b1. The piping identified in Table 2.2.4-4 as ASME Code Section III is designed in accordance with ASME Code Section III requirements and seismic Category I requirements.

b2. The as-built piping identified in Table 2.2.4-4 as ASME Code Section III shall be reconciled with the with the piping design requirements.

b3. The piping identified in Table 2.2.4-4 as ASME Code Section III is fabricated, installed, and inspected in accordance with ASME Code Section III requirements.

(11) Pressure boundary welds

a. Pressure boundary welds in components identified in Table 2.2.4-4 as ASME Code Section III meet ASME Code Section III requirements.

b. Pressure boundary welds in piping identified in Table 2.2.4-4 as ASME Code Section III meet ASME Code Section III requirements.

(12) Pressure boundary integrity

a. The components identified in Table 2.2.4-4 as ASME Code Section III retain their pressure boundary integrity at their design pressure.

b. The piping identified in Table 2.2.4-4 as ASME Code Section III retains its pressure boundary integrity at its design pressure.

(13) The Seismic Category I components identified in Tables 2.2.4-4 and 2.2.4-5 can withstand seismic design basis loads without loss of safety function.

(14) Deleted.

(15) Each of the SLC System safety-related loads/components identified in Tables 2.2.4-4 and 2.2.4-5 is powered from its respective safety-related division.

(16) In the SLC System, independence is provided between safety-related divisions, and between safety-related divisions and nonsafety-related equipment.

(17) Deleted.

(18) Re-positionable (not squib) valves designated in Table 2.2.4-4 as having an active safety-related function open, close, or both open and close under differential pressure, fluid flow, and temperature conditions.

(19) The pneumatically operated valve(s) designated in Table 2.2.4-4 fail in the mode listed if either electric power to the valve actuating solenoid is lost, or pneumatic pressure to the valve(s) is lost.

(20) Check valves designated in Table 2.2.4-4 as having a safety-related function open, close, or both open and close under system pressure, fluid flow, and temperature conditions.

(21) The SLC System injection squib valve will open as designed.

(22) The equivalent natural boron concentration at cold shutdown conditions for the total solution injection volume is based on the liquid inventory in the RPV at the main steam line nozzle elevation plus the liquid inventory in the reactor shutdown cooling piping and equipment of the RWCU/SDC system.

(23) SLC software is developed in accordance with the software development program described in Section 3.2.

Inspections, Tests, Analyses and Acceptance Criteria

Table 2.2.4-6 defines the inspections, tests, and/or analyses, together with associated acceptance criteria for the SLC system.

Table 2.2.4-1

SLC System Functional Arrangement

The SLC system is safety-related, Seismic Category I.
The SLC system comprises two 50% capacity trains with an accumulator tank for each train.
Each accumulator tank has an injectable liquid volume of at least 7.8 m^3 (2061 gal).
Each accumulator tank has a cover gas volume above the liquid of at least 14.8 m^3 (523 ft^3).
Each accumulator tank is capable of maintaining an initial nitrogen cover gas absolute pressure of least 14.82 MPa (2150 psia).
Each SLC train has redundant squib-type injection valves, installed in parallel, connected to a common injection line.
Each injection line is connected to manifolds within the RPV core region, which have injection nozzles in each quadrant.
Each accumulator has redundant level and pressure instrumentation.
Each accumulator has redundant shut-off valves, installed in series, which automatically close after injection.
Each accumulator has a pressure relief line and valve.
Each accumulator has vent piping and valves to permit depressurization of each accumulator.
Each accumulator has piping and valves used for initial and periodic solution addition and gas (nitrogen) charging.
Each SLC system train is powered by a separate safety-related power supply.
The SLC accumulators and piping upstream of the injection valves conforms with ASME Section III, Class NC.
The injection valves and piping downstream of the injection valves conforms with ASME Section III, Class NB.
Electronic equipment, including instrumentation, located in SLC tank room and SLC tank instrumentation room is environmentally qualified.

Table 2.2.4-2

SLC System Automatic Functions, Initiators, and Associated Interfacing Systems

Function	Initiator	Interfacing System
Open SLC injection valves	DPV Group 1 timer expired.	SSLC/ESF, NBS and DPS
	RPV pressure high and Startup Range Neutron Monitor (SRNM), i.e., the SRNM ATWS permissive, exist for specified time delay period.	NBS, NMS, and ATWS/SLC
	SRNM ATWS permissive and RPV water level low (L2) exist for specified time delay period.	NBS, NMS, and ATWS/SLC
	SRNM ATWS permissive and Manual ARI/FMCRD run-in signals exist for specified time delay period.	NBS, NMS, ATWS/SLC, and DPS
Close SLC accumulator shut-off valves	SLC accumulator level low following injection.	

Table 2.2.4-3

SLC System Controls and Interlocks

Parameter	Description
Control	Manual initiation of SLC injection valves (ATWS/SLC)
Interlock	ATWS trip signal (from ATWS/SLC trip signal to open SLC injection squib valves)
	ECCS initiation signal (from SSLC/ESF to open SLC injection squib valves)
	RWCU/SDC isolation signal to LD&IS on SLC injection (ATWS/SLC)
	ECCS initiation signal (from DPS to open SLC injection squib valves)

Table 2.2.4-4

SLC System Mechanical Equipment

Equipment Name (Description)	Equipment Identifier See Figure 2.2.4-1	ASME Code Section III	Seismic Cat. I	RCPB Component	Containment Isolation Valve	Remotely Operated	Loss of Motive Power Position	MCR Alarms
Train A Nitrogen Supply Line Check Valve	V-20	Yes	Yes	No	No	No	-	No
Train B Nitrogen Supply Line Check Valve	V-19	Yes	Yes	No	No	No	-	No
Train A Nitrogen Supply Isolation Valve	V-18	Yes	Yes	No	No	Yes	Closed	Note 1
Train A Accumulator	-	Yes	Yes	No	No	No	-	No
Train A Accumulator Relief Valve	V-22	Yes	Yes	No	No	No	-	No
Train B Nitrogen Supply Isolation Valve	V-15	Yes	Yes	No	No	Yes	Closed	Note 1
Train B Accumulator	-	Yes	Yes	No	No	No	-	No

Table 2.2.4-4

SLC System Mechanical Equipment

Equipment Name (Description)	Equipment Identifier See Figure 2.2.4-1	ASME Code Section III	Seismic Cat. I	RCPB Component	Containment Isolation Valve	Remotely Operated	Loss of Motive Power Position	MCR Alarms
Train B Accumulator Relief Valve	V-21	Yes	Yes	No	No	No	-	No
Train A Accumulator Vent Valve	V-17	Yes	Yes	No	No	Yes	Closed	Note 1
Train A Accumulator Vent Valve	V-16	Yes	Yes	No	No	Yes	Closed	Note 1
Train A Accumulator Vent line flow restricting orifice	-	Yes	Yes	No	No	-	-	No
Train B Accumulator Vent Valve	V-14	Yes	Yes	No	No	Yes	Closed	Note 1
Train B Accumulator Vent Valve	V-13	Yes	Yes	No	No	Yes	Closed	Note 1

Table 2.2.4-4

SLC System Mechanical Equipment

Equipment Name (Description)	Equipment Identifier See Figure 2.2.4-1	ASME Code Section III	Seismic Cat. I	RCPB Component	Containment Isolation Valve	Remotely Operated	Loss of Motive Power Position	MCR Alarms
Train B Accumulator Vent line flow restricting orifice	-	Yes	Yes	No	No	-	-	No
Deleted								
Deleted								
Deleted								
Train A Accumulator Shut-off valve	V-3	Yes	Yes	No	No	Yes	Fail-as-is	Yes
Train A Accumulator Shut-off valve	V-4	Yes	Yes	No	No	Yes	Fail-as-is	Yes
Deleted								
Train B Accumulator Shut-off valve	V-1	Yes	Yes	No	No	Yes	Fail-as-is	Yes

Table 2.2.4-4

SLC System Mechanical Equipment

Equipment Name (Description)	Equipment Identifier See Figure 2.2.4-1	ASME Code Section III	Seismic Cat. I	RCPB Component	Containment Isolation Valve	Remotely Operated	Loss of Motive Power Position	MCR Alarms
Train B Accumulator Shut-off valve	V-2	Yes	Yes	No	No	Yes	Fail-as-is	Yes
Train A Injection Squib Valve	V-7	Yes	Yes	Yes	Yes	Yes	Fail-as-is	Yes
Train A Injection Squib Valve	V-8	Yes	Yes	Yes	Yes	Yes	Fail-as-is	Yes
Train B Injection Squib Valve	V-5	Yes	Yes	Yes	Yes	Yes	Fail-as-is	Yes
Train B Injection Squib Valve	V-6	Yes	Yes	Yes	Yes	Yes	Fail-as-is	Yes
Train A Accumulator Injection Test/Vent Valve	V-24	Yes	Yes	Yes	No	No	-	No
Train B Accumulator Injection Test/Vent Valve	V-23	Yes	Yes	Yes	No	No	-	No

Table 2.2.4-4

SLC System Mechanical Equipment

Equipment Name (Description)	Equipment Identifier See Figure 2.2.4-1	ASME Code Section III	Seismic Cat. I	RCPB Component	Containment Isolation Valve	Remotely Operated	Loss of Motive Power Position	MCR Alarms
Train A Injection Check Valve	V-11	Yes	Yes	Yes	Yes	No	-	No
Train A Injection Check Valve	V-12	Yes	Yes	Yes	Yes	No	-	No
Train B Injection Check Valve	V-9	Yes	Yes	Yes	Yes	No	-	No
Train B Injection Check Valve	V-10	Yes	Yes	Yes	Yes	No	-	No
Train A Vessel Isolation Valve	V-26	Yes	Yes	Yes	No	No	-	No
Train B Vessel Isolation Valve	V-25	Yes	Yes	Yes	No	No	-	No
Deleted								
Deleted								
Main Mixing Pump Suction Isolation Valve	V-27	Yes	Yes	No	No	No	-	No

Table 2.2.4-4

SLC System Mechanical Equipment

Equipment Name (Description)	Equipment Identifier See Figure 2.2.4-1	ASME Code Section III	Seismic Cat. I	RCPB Component	Containment Isolation Valve	Remotely Operated	Loss of Motive Power Position	MCR Alarms
Main Mixing Pump Discharge Isolation Valve	V-28	Yes	Yes	No	No	No	-	No
Deleted								
Poison Solution Batch Mixing Isolation Valve	V-29	Yes	Yes	No	No	No	-	No
Train A piping from the locked open valve closest to the reactor vessel through the first NS class break	-	Yes	Yes	No	No	No	-	No
Train B piping from the locked open valve closest to the reactor vessel through the first NS class break	-	Yes	Yes	No	No	No	-	No

NOTE 1: Final determination of MCR Alarms will be based on Table 2.2.4-6, Item 4.

Table 2.2.4-5

SLC System Electrical Equipment

Equipment Name (Description)	Equipment Identifier See Figure 2.2.4-1	Control Q-DCIS / DPS	Seismic Cat. I	Safety-Related	Safety-Related Display	Deleted	Remotely Operated	Containment Isolation Valve Actuator
Train A Accumulator Pressure Sensor	PT	Yes	Yes	Yes	Yes		-	No
Train B Accumulator Pressure Sensor	PT	Yes	Yes	Yes	Yes		-	No
Train A Accumulator Level Sensor	LT	Yes	Yes	Yes	Yes		-	No
Train B Accumulator Level Sensor	LT	Yes	Yes	Yes	Yes		-	No
Train A Injection Squib Valve Initiator(s)	-	Note 1	Yes	Yes	Yes		Yes	Yes
Train B Injection Squib Valve Initiator(s)	-	Yes Note 1	Yes	Yes	Yes		Yes	Yes

Table 2.2.4-5

SLC System Electrical Equipment

Equipment Name (Description)	Equipment Identifier See Figure 2.2.4-1	Control Q-DCIS / DPS	Seismic Cat. I	Safety-Related	Safety-Related Display	Deleted	Remotely Operated	Containment Isolation Valve Actuator
SLC Train A and Train B Logic Controllers	-	Yes	Yes	Yes	-		-	No
Train A Nitrogen Supply Isolation Valve	V-18	No	Yes	No	Note 2		Yes	No
Train B Nitrogen Supply Isolation Valve	V-15	No	Yes	No	Note 2		Yes	No
Train A Accumulator Vent Valve	V-17	No	Yes	No	Note 2		Yes	No
Train A Accumulator Vent Valve	V-16	No	Yes	No	Note 2		Yes	No
Train B Accumulator Vent Valve	V-14	No	Yes	No	Note 2		Yes	No

Table 2.2.4-5

SLC System Electrical Equipment

Equipment Name (Description)	Equipment Identifier See Figure 2.2.4-1	Control Q-DCIS / DPS	Seismic Cat. I	Safety-Related	Safety-Related Display	Deleted	Remotely Operated	Containment Isolation Valve Actuator
Train B Accumulator Vent Valve	V-13	No	Yes	No	Note 2		Yes	No
Train A Accumulator Shutoff Valve	V-3	Yes	Yes	Yes	Yes		Yes	No
Train A Accumulator Shutoff Valve	V-4	Yes	Yes	Yes	Yes		Yes	No
Train B Accumulator Shutoff Valve	V-1	Yes	Yes	Yes	Yes		Yes	No
Train B Accumulator Shutoff Valve	V-2	Yes	Yes	Yes	Yes		Yes	No
Train A Accumulator Temperature Indicator	TI	No	Yes	No	Note 2		-	No

Table 2.2.4-5

SLC System Electrical Equipment

Equipment Name (Description)	Equipment Identifier See Figure 2.2.4-1	Control Q-DCIS / DPS	Seismic Cat. I	Safety-Related	Safety-Related Display	Deleted	Remotely Operated	Containment Isolation Valve Actuator
Train B Accumulator Temperature Indicator	TI	No	Yes	No	Note 2		-	No

NOTE 1: Squib valve initiators allow independent SLC injection from different safety-related divisions and/or DPS

NOTE 2: Final determination of safety-related display will be based on Table 2.2.4-6, Item 4.

Table 2.2.4-6

ITAAC For The Standby Liquid Control System

Design Commitment	Inspections, Tests, Analyses	Acceptance Criteria
1. The functional arrangement of the SLC system is defined in Table 2.2.4-1 and shown in Figure 2.2.4-1.	Inspection(s), test(s), and type test(s) of the as-built system will be performed.	Report(s) document(s) that the as-built system conforms to the functional arrangement defined in Table 2.2.4-1 and shown in Figure 2.2.4-1. For components and piping identified in Table 2.2.4-4 as ASME Code Section III, this report is an ASME Code report.
2. The SLC system automatic functions, initiators, and associated interfacing systems are defined in Table 2.2.4-2.	See Subsection 2.2.15	See Subsection 2.2.15
3. The SLC system controls and interlocks are defined in Table 2.2.4-3.	See Subsection 2.2.15	See Subsection 2.2.15
4. The SLC system minimum inventory of alarms, displays, and status indications in the main control room (MCR) are addressed in Section 3.3.	See Section 3.3.	See Section 3.3.
5. Conformance with IEEE Std. 603 requirements by the safety-related control system structures, systems, and components defined in Table 2.2.4-1 is addressed in Subsection 2.2.15.	See Subsection 2.2.15.	See Subsection 2.2.15.

Table 2.2.4-6

ITAAC For The Standby Liquid Control System

Design Commitment	Inspections, Tests, Analyses	Acceptance Criteria
6. The equipment qualification of SLC system components defined in Table 2.2.4-1 is addressed in Section 3.8.	See Section 3.8.	See Section 3.8.
7. During an ATWS, the SLC system shall be capable of injecting borated water into the RPV at flowrates that assure rapid power reduction.	Tests are conducted to measure injection time of the as-built SLC system by injecting demineralized water from both accumulators into the open RPV. The initial differential pressure (6.21 MPa) between the accumulators and the RPV are set to that expected at the beginning of an ATWS by adjusting the accumulator pressures. Analyses are performed to correlate test results to as-built SLC system performance during an actual ATWS.	Test and analysis reports exist and conclude that during an ATWS the as-built SLC system (both accumulators) injects borated water into the RPV within the following time frames: • The first 5.4 m^3 of solution injects in ≤ 196 seconds. • The first and second 5.4 m^3 of solution injects in ≤ 519 seconds.
8. The SLC system shall be capable of injecting borated water for use as makeup water to the RPV in response to a Loss-of-Coolant-Accident (LOCA).	Tests are conducted with the as-built SLC system to measure the total volume of demineralized water injected from both accumulators into the open RPV. These tests utilize the continuation of the tests conducted in ITAAC #7. Analyses are performed to correlate test results to as-built SLC system performance during an actual LOCA.	Test and analysis reports exist and conclude that the as-built SLC system (both accumulators) injects a total volume of ≥15.6 m^3 of borated water in response to a LOCA.

Table 2.2.4-6

ITAAC For The Standby Liquid Control System

Design Commitment	Inspections, Tests, Analyses	Acceptance Criteria
9. The redundant injection shut-off valves shown in Figure 2.2.4-1 as V1, V2, V3, and V4 are automatically closed by low accumulator level signals.	Test(s) will be performed using a simulated low accumulator level signal to close the injection shut-off valves V1, V2, V3, and V4.	Test report(s) document that the as-built injection shut-off valves identified in Figure 2.2.4-1 as V1, V2, V3, and V4 close upon receipt of a simulated low accumulator level signal
10. ASME Code Section III		
a1. The components identified in Table 2.2.4-4 as ASME Code Section III are designed in accordance with ASME Code Section III requirements and seismic Category I requirements.	Inspection of ASME Code Design Reports (NCA-3550) and required documents will be conducted.	ASME Code Design Reports (NCA-3550) (certified, when required by ASME Code) conclude that the design of the SLC components identified in Table 2.2.4-4 as ASME Code Section III complies with the requirements of the ASME Code, Section III, including for those stresses and loads related to fatigue (including environmental effects), thermal expansion, seismic, and combined.
a2. The components identified in Table 2.2.4-4 as ASME Code Section III shall be reconciled with the design requirements.	A reconciliation analysis of the components using as-designed and as-built information and ASME Code certified Design Reports (NCA-3550) will be performed.	An ASME Code Design Report (certified, when required by ASME Code) exists and concludes that design reconciliation has been completed in accordance with the ASME Code for as-built reconciliation of the SLC System components identified in Table 2.2.4-4 as ASME Code Section III. The report documents the results of the reconciliation analysis.

Table 2.2.4-6

ITAAC For The Standby Liquid Control System

Design Commitment	Inspections, Tests, Analyses	Acceptance Criteria
a3. The components identified in Table 2.2.4-4 as ASME Code Section III are fabricated, installed, and inspected in accordance with ASME Code Section III requirements.	Inspection of the components will be conducted.	ASME Code Data Reports (including N-5 Data reports, where applicable) (certified, when required by ASME Code) and inspection reports document that the components identified in Table 2.2.4-4 as ASME Code Section III are fabricated, installed, and inspected in accordance with ASME Code Section III requirements.
b1. The piping identified in Table 2.2.4-4 as ASME Code Section III is designed in accordance with ASME Code Section III requirements and seismic Category I requirements.	Inspection of ASME Code certified Design Reports (NCA-3550) and required documents will be conducted. {{Design Acceptance Criteria}}	ASME Code certified Design Reports (NCA-3550) (certified, when required by ASME Code) conclude that the design of the piping identified in Table 2.2.4-4 as ASME Code Section III complies with the requirements of the ASME Code, Section III, including for those stresses and loads related to fatigue (including environmental effects), thermal expansion, seismic, and combined. {{Design Acceptance Criteria}}
b3. The piping identified in Table 2.2.4-4 as ASME Code Section III is fabricated, installed, and inspected in accordance with ASME Code Section III requirements.	Inspections of the piping will be conducted.	ASME Code Data Reports (certified, when required by ASME Code) and inspection reports (including N-5 Data Reports where applicable) document that the piping identified in Table 2.2.4-4 as ASME Code Section III is fabricated, installed, and inspected in accordance with ASME Code Section III requirements.

Table 2.2.4-6

ITAAC For The Standby Liquid Control System

Design Commitment	Inspections, Tests, Analyses	Acceptance Criteria
11. Pressure boundary welds		
a. Pressure boundary welds in components identified in Table 2.2.4-4 as ASME Code Section III meet ASME Code Section III requirements.	Inspection of the as-built pressure boundary welds will be performed in accordance with the ASME Code Section III.	An ASME Code Report exists and concludes that the ASME Code Section III requirements are met for non-destructive examination of pressure boundary welds in the SLC system.
b. Pressure boundary welds in piping identified in Table 2.2.4-4 as ASME Code Section III meet ASME Code Section III requirements.	Inspection of the as-built pressure boundary welds will be performed in accordance with the ASME Code Section III.	An ASME Code Report exists and concludes that the ASME Code Section III requirements are met for non-destructive examination of pressure boundary welds in the SLC system.
12. Pressure boundary integrity		
a. The components identified in Table 2.2.4-4 as ASME Code Section III retain their pressure boundary integrity at their design pressure.	A hydrostatic test will be conducted on those code components of the SLC System required to be hydrostatically tested by the ASME code.	An ASME Code Report exists and concludes that the results of the hydrostatic test of the ASME Code components of the SLC System comply with the requirements of the ASME Code, Section III.
b. The piping identified in Table 2.2.4-4 as ASME Code Section III retains its pressure boundary integrity at its design pressure.	A hydrostatic test will be conducted on the code piping of the SLC System required to be hydrostatically tested by the ASME code	An ASME Code Report exists and concludes that the results of the hydrostatic test of the ASME Code piping of the SLC System comply with the requirements of the ASME Code, Section III.

Table 2.2.4-6

ITAAC For The Standby Liquid Control System

Design Commitment	Inspections, Tests, Analyses	Acceptance Criteria
13. The seismic Category I components identified in Tables 2.2.4-4 and 2.2.4-5 can withstand seismic design basis loads without loss of safety function.	a) Type tests, analyses, or a combination of type tests and analyses of Seismic Category I equipment will be performed using analytical assumptions, or under conditions, which bound the Seismic Category I design requirements. b) Inspection and analyses will be performed to verify that the as-built components identified in Tables 2.2.4-4 and 2.2.4-5, including anchorage, are seismically bounded by the testing or analyzed conditions.	a) A report exists and concludes that the components identified in Tables 2.2.4-4 and 2.2.4-5 can withstand design basis loads without loss of safety-related function. b) A report exists and concludes that the as-built components identified in Tables 2.2.4-4 and 2.2.4-5, including anchorage have been tested or analyzed under the conditions necessary to ensure compliance with Seismic Category I design requirements.
14. Deleted	Deleted	Deleted
15. Each of the SLC System divisions (or safety-related loads/components) identified in Tables 2.2.4-4 and 2.2.4-5 is powered from its respective safety-related division.	Testing will be performed on the SLC System by providing a test signal in only one safety-related division at a time.	Report(s) document that a test signal exists in the safety-related division (or at the equipment identified in Table 2.2.4–4 powered from the safety-related division) under test in the SLC System.

Table 2.2.4-6

ITAAC For The Standby Liquid Control System

Design Commitment	Inspections, Tests, Analyses	Acceptance Criteria
16. In the SLC System, independence is provided between safety-related divisions, and between safety-related divisions and nonsafety-related equipment.	a. Tests will be performed on the SLC System by providing a test signal in only one safety-related division at a time. b. Inspection of the as-installed safety-related divisions in the SLC System will be performed.	a. Report(s) document that the test signal exists only in the safety-related division under test in the System. b. Inspection report(s) of the as-installed safety-related divisions in the SLC System document(s) that: i) Physical separation or electrical isolation exists between these safety-related divisions in accordance with RG 1.75. ii) Physical separation or electrical isolation exists between safety-related Divisions and nonsafety-related equipment in accordance with RG 1.75.
17. Deleted	Deleted	Deleted
18. Re-positionable (not squib) valves designated in Table 2.2.4-4 as having an active safety-related function open, close, or both open and close under differential pressure, fluid flow, and temperature conditions.	Tests of installed valves will be performed for opening, closing, or both opening and closing under system preoperational differential pressure, fluid flow, and temperature conditions.	Report(s) document that, upon receipt of the actuating signal, each valve opens, closes, or both opens and closes, depending upon the valve's safety function.

Table 2.2.4-6

ITAAC For The Standby Liquid Control System

Design Commitment	Inspections, Tests, Analyses	Acceptance Criteria
19. The pneumatically operated valve(s) designated in Table 2.2.4-4 fail in the mode listed if either electric power to the valve actuating solenoid is lost, or pneumatic pressure to the valve(s) is lost.	Tests will be conducted on the as-built valve(s).	Report(s) document that the pneumatically operated valve(s) identified in Table 2.2.4–4 fail in the listed mode when either electric power to the valve actuating solenoid is lost, or pneumatic pressure to the valve(s) is lost.
20. Check valves designated in Table 2.2.4-4 as having a safety-related function open, close, or both open and close under system pressure, fluid flow, and temperature conditions	Tests of installed valves for opening, closing, or both opening and closing, will be conducted under system preoperational pressure, fluid flow, and temperature conditions.	Report(s) document that, based on the direction of the differential pressure across the valve, each CV opens, closes, or both opens and closes, depending upon the valve's safety functions.
21. The SLC System injection squib valve will open as designed.	A vendor type test will be performed on a squib valve to open as designed.	Records of vendor type test will conclude SLC injection squib valves used in the injection and equalization will open as designed.
22. The equivalent natural boron concentration at cold shutdown conditions for the total solution injection volume is based on the liquid inventory in the RPV at the main steam line nozzle elevation plus the liquid inventory in the reactor shutdown cooling piping and equipment of the RWCU/SDC system.	An analysis of the as-built system will be performed to determine the equivalent natural boron concentration at cold shutdown conditions for the total solution injection volume.	The equivalent natural boron concentration at cold shutdown conditions for the total solution injection volume is > 1100 ppm.

Table 2.2.4-6

ITAAC For The Standby Liquid Control System

Design Commitment	Inspections, Tests, Analyses	Acceptance Criteria
23. SLC software is developed in accordance with the software development program described in Section 3.2.	See Section 3.2.	See Section 3.2.

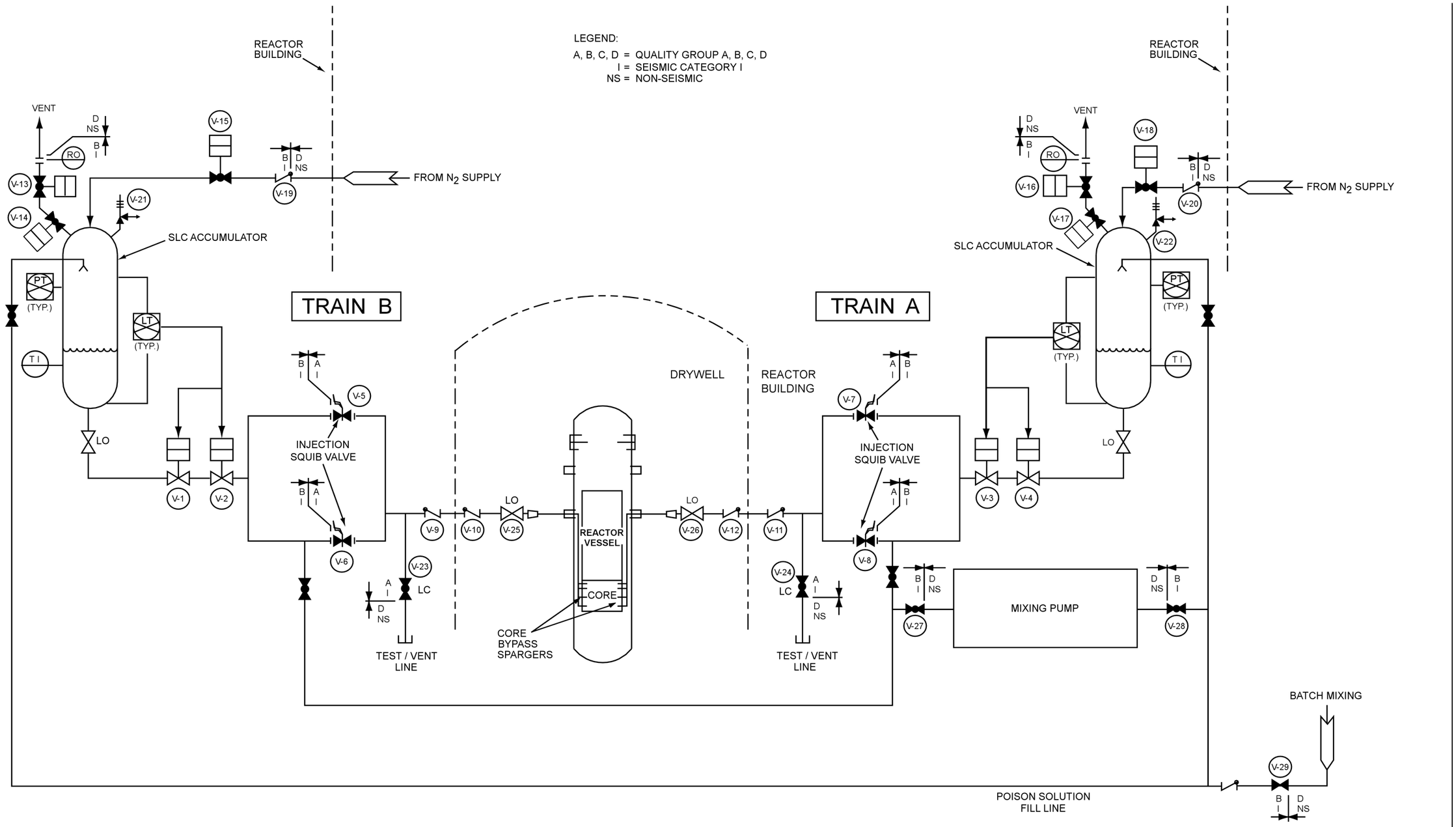

Figure 2.2.4-1. Standby Liquid Control System Simplified Diagram

2.2.5 Neutron Monitoring System

Design Description

The Neutron Monitoring System (NMS) monitors thermal neutron flux and supports the Reactor Protection System (RPS).

Functional Arrangement

(1) NMS functional arrangement is defined in Table 2.2.5-1.

Functional Requirements

(2) NMS automatic functions, initiators, and associated interfacing systems are defined in Table 2.2.5-2.

(3) NMS controls, interlocks, and bypasses are defined in Table 2.2.5-3.

(4) NMS minimum inventory of alarms, displays, and status indications in the main control room (MCR) are addressed in Section 3.3.

(5) Conformance with IEEE Std. 603 requirements by the safety-related control system structures, systems, and components defined in Table 2.2.5-1 is addressed in Subsection 2.2.15.

(6) The equipment qualification of NMS components defined in Table 2.2.5-1 is addressed in Section 3.8.

(7) NMS software is developed in accordance with the software development program described in Section 3.2.

Inspections, Tests, Analyses and Acceptance Criteria

Table 2.2.5-4 provides a definition of the inspections, tests, and/or analyses, together with associated acceptance criteria for the NMS.

Table 2.2.5-1

NMS Functional Arrangement

NMS comprises the safety-related startup range neutron monitor (SRNM) subsystem and the power range neutron monitor (PRNM) subsystem; and the nonsafety-related automatic fixed in-core probe (AFIP) subsystem and multi-channel rod block monitor (MRBM) subsystem.
NMS SRNM and PRNM subsystems are safety-related.
NMS is a four division, redundant, logic based system.
NMS divisions fail-safe to a trip condition on critical hardware failure, power failure, or loss of communication failure.
NMS controllers and their preamplifiers are located in mild environments in divisionally separate rooms in the Control Building (CB) and Reactor Building (RB).
NMS logic is designed to provide a trip initiation by requiring coincident trip of at least two divisions to cause the trip output when non-coincident logic is not imposed.
Each NMS division is powered by its divisional safety-related UPS power supply.
The PRNM subsystem comprises the local power range monitors (LPRM), the average power range monitors (APRM), and the oscillation power range monitors (OPRM).
SRNM trip signal logic is interlocked with Coincident/Non-coincident switch and the Reactor Mode Switch.
The SRNM subsystem has 12 SRNM channels, each channel having one fixed in-core regenerative fission chamber sensor.
The SRNM subsystem monitors neutron flux from the source range to 15% of the reactor rated power.
The LPRM detector assemblies, SRNM detector assemblies, wiring, cables, and connector are located in a harsh environment within the lower DW in the RB.
LPRM provides signals that are proportional to the local neutron flux.
LPRM subsystem comprises 64 assemblies, divided into four divisions, distributed uniformly throughout the core, each assembly having four uniformly spaced fixed in-core fission chamber detectors and seven AFIP sensors .
The LPRM detector assemblies have a design pressure of 8.62 MPa g (1250 psig).
The LPRM subsystems monitor neutron flux from 1 % to 125 % of reactor rated power.

Table 2.2.5-1

NMS Functional Arrangement

Each APRM division generates the PRNM trip signals for the associated RPS division based on LPRM signals, APRM calculations, OPRM calculations. OPRM provides neutron flux oscillation trip signals for the APRM trip signal.

Table 2.2.5-2

NMS Functions, Initiators, and Associated Interfacing Systems

Function	Initiator	Interfacing System
SRNM Trip	SRNM short period	RPS
	SRNM upscale	RPS
	SRNM inoperable	RPS
	SRNM non-coincident upscale [A non-coincident SRNM trip with Reactor Mode Switch in SHUTDOWN, REFUEL, or STARTUP, position, the NMS Coincident/Non-coincident switch is in the NON-COINCIDENT position, and a single SRNM exceeds count setpoint]	RPS
PRNM Trip	APRM upscale flux	RPS,
	APRM inoperative	RPS
	APRM upscale simulated reactor thermal power	RPS
	OPRM oscillation detection	DPS, RPS

Table 2.2.5-3

NMS Controls, Interlocks, and Bypasses

MCR Parameter	Description
Control	APRM Channel Bypass Control (one for each division) (hardware).
	SRNM Channel Bypass Controls (one for each bypass group) (hardware).
	MRBM Main Channel Bypass
	Coincident/Non-coincident switch.
Interlock	APRM ATWS Permissive (for ATWS ADS inhibit[ATWS/SLC])
	APRM Rod Block (RC&IS)
	Reactor Mode Switch (RPS)
	SRNM ATWS Permissive (ATWS/SLC)
	SRNM Rod Block (RC&IS)
	APRM Signal (RPS, RC&IS, DPS)
	SRNM Signal (RC&IS, DPS)
Bypass	MRBM Main Channel Bypass (one for each division)
	APRM Channel Bypass Control (one for each division)
	SRNM Channel Bypass Controls (one for each bypass group)

Table 2.2.5-4

ITAAC For The Neutron Monitoring System

Design Commitment	Inspections, Tests, Analyses	Acceptance Criteria
1. NMS functional arrangement is defined in Table 2.2.5-1.	Inspection(s), test(s), and/or type test(s) will be performed on the as-built configuration as described in Table 2.2.5-1.	Inspection, test, and/or type test report(s) document(s) that the system conforms to the functional arrangement as described in Table 2.2.5-1.
2. NMS automatic functions, initiators, and associated interfacing systems are defined in Table 2.2.5-2.	See Subsection 2.2.15.	See Subsection 2.2.15.
3. NMS controls, interlocks, and bypasses are defined in Table 2.2.5-3.	See Subsection 2.2.15.	See Subsection 2.2.15.
4. The NMS system minimum inventory of alarms, displays, and status indications in the main control room (MCR) are addressed in Section 3.3.	See Section 3.3.	See Section 3.3.
5. Conformance with IEEE Std. 603 requirements by the safety-related control system structures, systems, and components defined in Table 2.2.5-1 is addressed in Subsection 2.2.15.	See Subsection 2.2.15.	See Subsection 2.2.15.
6. The equipment qualification of NMS components defined in Table 2.2.5-1 is addressed in Section 3.8.	See Section 3.8.	See Section 3.8.

Table 2.2.5-4

ITAAC For The Neutron Monitoring System

Design Commitment	Inspections, Tests, Analyses	Acceptance Criteria
7. NMS software is developed in accordance with the software development program described in Section 3.2.	See Section 3.2.	See Section 3.2.

2.2.6 Remote Shutdown System

Design Description

The Remote Shutdown System (RSS) provides remote manual control of the systems necessary to: (a) perform a prompt shutdown (scram) of the reactor, (b) perform safe (hot) shutdown of the reactor after a scram, (c) perform subsequent cold shutdown of the reactor, and (d) monitor the reactor to ensure safe conditions are maintained during and following a reactor shutdown.

Functional Arrangement

(1) RSS functional arrangement is described in Subsection 2.2.6 and defined in Table 2.2.6-1.

Functional Requirements

(2) RSS dedicated controls are defined in Table 2.2.6-2.

(3) RSS minimum inventory of alarms, displays, controls, and status indications is addressed in Section 3.3.

(4) Conformance with IEEE Std. 603 requirements by the safety-related control system structures, systems, and components defined in Table 2.2.6-1 is addressed in Subsection 2.2.15.

(5) The equipment qualification of RSS components defined in Table 2.2.6-1 is addressed in Section 3.8.

(6) RSS software is developed in accordance with the software development program described in Section 3.2.

Inspections, Tests, Analyses and Acceptance Criteria

Table 2.2.6-3 provides a definition of the inspections, tests, and/or analyses, together with associated acceptance criteria for the RSS.

Table 2.2.6-1

RSS Functional arrangement

RSS is safety-related, Seismic Category I
RSS has two redundant, independent, panels
RSS panels are located in two separate rooms in different divisional quadrants of the Reactor Building
RSS panels have a safety-related Division 1 visual display unit (VDU), a safety-related Division 2 VDU, and a nonsafety-related VDU
Safety-related systems in each RSS panel receive power from divisionally separate safety-related uninterruptible power supplies
Nonsafety-related systems in each RSS panel receive power from nonsafety-related power supplies

Table 2.2.6-2
RSS Controls

Division 1 Manual Scram Control
Division 2 Manual Scram Control
Division 1 Manual MSIV Isolation Control
Division 2 Manual MSIV Isolation Control
Safety-related Division 1 VDU displays
Safety-related Division 2 VDU displays
Nonsafety-related VDU displays
Nonsafety-related Communications Equipment

Table 2.2.6-3

ITAAC For The Remote Shutdown System

Design Commitment	Inspections, Tests, Analyses	Acceptance Criteria
1. RSS functional arrangement is described in Subsection 2.2.6 and defined in Table 2.2.6-1.	Inspection(s) and test(s) will be performed to confirm that the as-built panels are configured as described in Subsection 2.2.6 and defined in Table 2.2.6-1.	Test report(s) document(s) that the as-built panels are configured as described in Subsection 2.2.6 and defined Table 2.2.6-1.
2. RSS dedicated controls are defined in Table 2.2.6-2.	Test(s) and type test(s) will be performed on the dedicated controls defined in Table 2.2.6-2.	Test report(s) document(s) that the RSS panels are capable of issuing control signals from the dedicated controls defined in Table 2.2.6-2.
3. RSS minimum inventory of alarms, displays, controls, and status indications is addressed in Section 3.3.	See Section 3.3	See Section 3.3.
4. Conformance with IEEE Std. 603 requirements by the safety-related control system structures, systems, and components defined in Table 2.2.6-1 is addressed in Subsection 2.2.15.	See Subsection 2.2.15.	See Subsection 2.2.15.
5. The equipment qualification of DICS components defined in Table 2.2.6-1 is addressed in Section 3.8.	See Section 3.8.	See Section 3.8.
6. RSS software is developed in accordance with the software development program described in Section 3.2.	See Section 3.2.	See Section 3.2.

2.2.7 Reactor Protection System

Design Description

The Reactor Protection System (RPS) initiates a reactor trip (scram) automatically whenever selected plant variables exceed preset limits or by manual operator action.

Functional Arrangement

(1) RPS functional arrangement is defined in Table 2.2.7-1.

Functional Requirements

(2) RPS automatic trip initiators and associated interfacing systems are defined in Table 2.2.7-2.

(3) RPS controls, interlocks (system interfaces), and bypasses are defined in Table 2.2.7-3.

(4) Conformance with IEEE Std. 603 requirements by the safety-related control system structures, systems, and components is addressed in Subsection 2.2.15.

(5) RPS minimum inventory of alarms, displays, and status indications in the main control room (MCR) are addressed in Section 3.3.

(6) The equipment qualification of RPS components is addressed in Section 3.8.

(7) RPS software is developed in accordance with the software development program described in Section 3.2.

Inspections, Tests, Analyses and Acceptance Criteria

Table 2.2.7-4 provides a definition of the inspections, tests, and/or analyses, together with associated acceptance criteria, which will be performed for the RPS.

Table 2.2.7-1

RPS Functional Arrangement

The RPS comprises four redundant safety-related, Seismic Category I, divisions of sensor channels, trip logics and trip actuators.
The RPS comprises two divisions of manual scram controls and scram logic circuitry.
The RPS logic is designed to provide a trip initiation by requiring a coincident trip of at least two divisions to cause the trip output.
The RPS trip actuator load drivers interrupt circuit power to scram pilot solenoids and scram air header dump valves.
The RPS is fail-safe such that on loss of redundant divisional electrical power supplies the load drivers of that division change to the tripped state.
Redundant safety-related power supplies are provided for each division.
Automatic and manual scram initiation logic systems are independent of each other.

Table 2.2.7-2

RPS Automatic Functions, Initiators, and Associated Interfacing Systems

Function	Initiator	Interfacing System
Reactor scram	NMS PRNM trip condition	NMS
	NMS SRNM trip condition	NMS
	CRD charging header pressure low	CRDS
	Turbine stop valve closed position	-
	Turbine control valve control oil pressure low	-
	Condenser pressure high	-
	Power Generation Bus Loss	-
	MSIV closed position	NBS
	Reactor Pressure high	NBS
	RPV reactor level low (Level 3)	NBS
	RPV reactor level high (Level 8)	NBS
	DW pressure high	CMS
	Suppression pool average temperature high	CMS
	High simulated thermal power (feedwater temperature biased)	NBS, NMS
	Feedwater temperature exceeding allowable simulated thermal power vs. FW temperature domain.	NBS, NMS

Table 2.2.7-3

RPS Controls, Interlocks (System Interfaces), and Bypasses

Parameter	Description
Control	Manual divisional trip switches
	Manual scram trip switches
	Reactor Mode Switch
	Divisional actuator trip manual switches
	RPS trip reset manual switches
	RPS scram test switch (to RC&IS)
Interlock (System Interface)	RPS full scram condition (to RC&IS, CRDS)
	Turbine bypass valves open position indication
	APRM Simulated Thermal Power (to NMS)
	Reactor Mode Switch positions: -RUN (to NMS, ICS, PAS, LD&IS) -STARTUP (to PAS, NMS) -SHUTDOWN (to CRDS) -REFUEL (to CRDS, PAS, NMS)
	Reactor Mode Switch in the SHUTDOWN position automatic bypass after a time delay
	CRD charging header pressure signal (to RC&IS)
	MSIV closure bypass (to LD&IS)
Bypass	Special MSIV operational bypass switches
	Reactor Mode Switch in Shutdown scram manual bypass switches
	CRD HCU accumulator charging header pressure trip manual bypass switches (to RC&IS)
	MSIV closure trip signals manual bypass switches (to LD&IS)
	RPS division of logic (TLU output) manual divisional bypass switches
	RPS Division of sensors (DTM output) manual divisional bypass switches

Table 2.2.7-4

ITAAC For The Reactor Protection System

Design Commitment	Inspections, Tests, Analyses	Acceptance Criteria
1. The functional arrangement is as described in Table 2.2.7-1.	Inspection(s), test(s), and/or type test(s) will be performed on the as-built configuration as described in Table 2.2.7-1.	Inspection, test, and/or type test report(s) document(s) that the system conforms to the functional arrangement as described in Table 2.2.7-1.
2. RPS automatic functions, initiators, and associated interfacing systems are defined in Table 2.2.7-2.	Test(s) and type test(s) will be performed on the as-built system using simulated signals.	Test and type test report(s) document the system is capable of performing the functions defined in Table 2.2.7-2.
3. RPS controls, interlocks (system interfaces), and bypasses are defined in Table 2.2.7-3.	Test(s) and type test(s) will be performed on the as-built system using simulated signals.	Test and type test report(s) document that the system controls and interlocks exist, can be retrieved in the main control room, or are performed in response to simulated signals and manual actions as defined in Table 2.2.7-3.
4. Conformance with IEEE Std. 603 requirements by the safety-related control system structures, systems, and components is addressed in Subsection 2.2.15.	See Subsection 2.2.15.	See Subsection 2.2.15.
5. RPS minimum inventory of alarms, displays, and status indications in the main control room (MCR) are addressed in Section 3.3.	See Section 3.3.	See Section 3.3.
6. The equipment qualification of RPS components is addressed in Section 3.8.	See Section 3.8.	See Section 3.8.

Table 2.2.7-4

ITAAC For The Reactor Protection System

Design Commitment	Inspections, Tests, Analyses	Acceptance Criteria
7. RPS software is developed in accordance with the software development program described in Section 3.2.	See Section 3.2.	See Section 3.2.

2.2.8 Plant Automation System

No ITAAC are required for this system.

2.2.9 Steam Bypass and Pressure Control System

Design Description

The Steam Bypass and Pressure Control (SB&PC) System controls the reactor pressure during reactor startup, power generation, and reactor shutdown by control of the turbine bypass valves and signals to the Turbine Generator Control System (TGCS), which controls the turbine control valves.

Functional Arrangement

(1) The SB&PC System functional arrangement is described in Table 2.2.9-1.

Functional Requirements

(2) The SB&PC System functions and initiating conditions described in Table 2.2.9-2.

(3) The SB&PC System minimum inventory of alarms, displays, and status indications in the main control room (MCR) are addressed in Section 3.3.

(4) SB&PC controllers are fault tolerant.

Inspections, Tests, Analyses and Acceptance Criteria

Table 2.2.9-3 specifiesof the inspections, tests, and/or analyses, together with associated acceptance criteria for the SB&PC system.

Table 2.2.9-1

SB&PC System Functional Arrangement

SB&PC System is a triple-redundant, fault-tolerant, digital controller.
SB&PC System fault-tolerant digital controllers are located in a mild environment in the Control Building.
SB&PC System has three redundant nonsafety-related AC uninterruptible power supplies designed so that loss of one power supply or incoming power source does not affect SB&PC system functional operation.
SB&PC System interfaces with Nuclear Boiler System (NBS) receiving reactor steam dome pressure signals.
SB&PC System interfaces with the TGCS receiving (1) turbine power load unbalance signal, (2) turbine trip signal, and (3) turbine steam flow demand signal.
SB&PC System interfaces with the main condenser receiving main condenser pressure signal.

Table 2.2.9-2

SB&PC System Functions and Initiating Conditions

Function	Initiating Condition
Close TBV	Main condenser pressure high
Modulate TBV	SB&PC System normal pressure control function

Table 2.2.9-3

ITAAC For The Steam Bypass and Pressure Control System

Design Commitment	Inspections, Tests, Analyses	Acceptance Criteria
1. The SB&PC System functional arrangement is described in Table 2.2.9-1.	Inspections of the as-built system will be conducted.	Inspection reports(s) document that the as-built SB&PC system conforms to the functional arrangement as defined in Table 2.2.9-1.
2. SB&PC system functions and initiating conditions as defined in Table 2.2.9-2.	Tests will be performed on the SB&PC system using simulated signals.	Test report(s) confirm that the SB&PC system is capable of performing the functions defined in Table 2.2.9-2.
3. SB&PC system minimum inventory of alarms, displays, and status indications in the main control room (MCR) are addressed in Section 3.3.	See Section 3.3	See Section 3.3.
4. SB&PC controllers are fault tolerant.	a. Test(s) will be performed simulating failure of any one SB&PC controller. b. Test(s) will be performed simulating failure of any two SB&PC controllers.	a. Test report(s) document that failure of any one SB&PC controller has no effect on SB&PC valve position demand signal. b. Test report(s) document that failure of any two SB&PC controllers generates a turbine trip signal.

2.2.10 Safety-Related Distributed Control and Information System

Design Description

The Safety-Related Distributed Control and Information System (Q-DCIS) is the designation given to the collection of hardware and software that comprise the safety-related portions of the systems listed in Table 2.2.10-1.

Inspections, Tests, Analyses and Acceptance Criteria

The inspections, tests, and/or analyses, together with associated acceptance criteria for Q-DCIS are contained within the ITAAC tables for the systems in Table 2.2.10-1.

Table 2.2.10-1

Systems and Functions Comprising The Q-DCIS

System [1]	Subsection
Nuclear Boiler System	2.1.2
Standby Liquid Control	2.2.4
Neutron Monitoring System	2.2.5
Remote Shutdown System	2.2.6
Reactor Protection System	2.2.7
Leak Detection and Isolation System	2.2.12
Engineered Safety Features Safety System Logic and Control	2.2.13
Diverse Instrumentation and Control System	2.2.14
Process Radiation Monitoring System	2.3.1
Isolation Condenser System	2.4.1
Emergency Core Cooling Systems Gravity-Driven Cooling System	2.4.2
Containment Monitoring System • Suppression Pool Temperature Monitoring Subsystem	2.15.7
Post Accident Monitoring Instrumentation	3.7

(1) Safety-related portions only

2.2.11 Nonsafety-Related Distributed Control and Information System

Design Description

The Nonsafety-Related Distributed Control and Information System (N-DCIS) is the designation given to the collection of hardware and software that comprise the nonsafety-related instrumentation, controls and monitoring systems and/or functions.

N-DCIS has no safety-related function.

N-DCIS includes the systems listed in Table 2.2.11-1.

Inspections, Tests, Analyses and Acceptance Criteria

The inspections, tests, and/or analyses, together with associated acceptance criteria for N-DCIS are contained (as required) within the ITAAC tables for the systems in Table 2.2.11-1.

Table 2.2.11-1

Systems and Functions Comprising The N-DCIS

System [1]	Subsection
Rod Control and Information System	2.2.1
Control Rod Drive System • CRD Hydraulic System	2.2.2
Feedwater Control System	2.2.3
Remote Shutdown System • Nonsafety-related VDUs	2.2.6
Plant Automation System	2.2.8
Steam Bypass and Pressure Control System	2.2.9
Diverse Instrumentation and Control System • Diverse Protection System	2.2.14
Reactor Water Cleanup/Shutdown Cooling System	2.6.1
Fuel and Auxiliary Pools Cooling System	2.6.2
Main Control Room Panels • Nonsafety-related VDUs	2.7.1
Condensate and Feedwater System	2.11.2
Condensate Purification System	2.11.3
Turbine Generator System • Turbine Generator Control System	2.11.4
Reactor Component Cooling Water System	2.12.3
Turbine Component Cooling Water System	2.12.4
Chilled Water System	2.12.5
Plant Service Water System	2.12.7
Instrument Air System	2.12.9
Electrical Power Distribution System	2.13.1
Standby On Site Power Supply	2.13.4
DW Cooling System	2.15.6
Plant Service Water System • Cooling Tower	4.4

[1] Nonsafety-related portions only

2.2.12 Leak Detection and Isolation System

Design Description

The Leak Detection and Isolation System (LD&IS) detects and monitors leakage from the containment, and initiates closure of inboard and outboard main steamline isolation valves (MSIVs), containment isolation valves (CIVs), and Reactor Building (RB) isolation dampers by the safety-related reactor trip and isolation function (RTIF) and SSLC/ESF programmable logic controller platforms.

Functional Arrangement

(1) The LD&IS functional arrangement is described in Tables 2.2.12-1.

Functional Requirements

(2) The LD&IS isolation function monitored variables are described in Table 2.2.12-2.

(3) The LD&IS leakage source monitored variables are described in Table 2.2.12-3.

(4) The LD&IS controls, interlocks, and bypasses are described in Table 2.2.12-4.

(5) Conformance with IEEE Std. 603 requirements by the safety-related control system structures, systems, and components is addressed in Subsection 2.2.15.

(6) The equipment qualification of LD&IS components described in Table 2.2.12-1 is addressed in Section 3.8.

(7) The LD&IS minimum inventory of alarms, displays, and status indications in the main control room are addressed in Section 3.3.

(8) The containment isolation components that correspond to the isolation functions described in Tables 2.2.12-2 and 2.2.12-3 are addressed in Subsection 2.15.1.

(9) LD&IS software is developed in accordance with the software development program described in Section 3.2.

Inspections, Tests, Analyses and Acceptance Criteria

Table 2.2.12-5 specifies the inspections, tests, and/or analyses, together with associated acceptance criteria for the LD&IS.

Table 2.2.12-1

LD&IS Functional Arrangement

LD&IS is safety-related, Seismic Category I.
LD&IS functions, other than MSIV isolation function, are implemented by SSLC/ESF platform.
LD&IS MSIV isolation function is implemented by the RTIF platform.
LD&IS isolation functions logic is designed to provide an actuation by requiring coincident trip of at least two divisions to cause the trip output.
LD&IS logic is de-energized to initiate the isolation function (i.e., fail-safe).
LD&IS logic channels and associated sensors are powered from safety-related power supplies.
DW floor drain high conductivity waste (HCW) sump instrumentation is designed with the sensitivity to detect a leakage step-change (increase) of 3.8 liters/min (1.0 gpm) within one hour and to alarm at sump flow rates in excess of 19 liters/min (5 gpm).

Table 2.2.12-2

LD&IS Isolation Function Monitored Variables

Monitored Variables	LD&IS Isolation Functions (1)										
	Main Steam & Drain Lines	RWCU/ SDC Lines	ICS Lines	Fission Products Sampling Lines	DW LCW Sump Drain Line	DW HCW Sump Drain Line	Containment Purge & Vent Valves	CWS Lines to DW Air Coolers	FAPCS Process Lines	R /B HVAC Exhaust Ducts	FW Line
RWCU/SDC Differential Mass Flow High	–	X	–	–	–	–	–	–	–	–	
(Deleted)	–	–	–	–		–	–	–	–	–	
(Deleted)	–	–	–	–	–		–	–	–	–	
SLC Initiation Signal	–	X	–	–	–	–	–	–	–	–	
Refueling Area Air Exhaust Radiation High	–	–	–	–	–	–	X	–	–	X	
Reactor Building Air Exhaust Radiation High	–	–	–	–	–	–	X	–	–	X	
Isolation Condenser Condensate Flow High	–	–	X	–	–	–	–	–	–	–	
Isolation Condenser Steam Flow High	–	–	X	–	–	–	–	–	–	–	
DW Pressure High	–	–	–	X	X	X	X	X	X	X	X(2)(3)
Main Condenser Vacuum Low	X	–	–	–	–	–	–	–	–	–	

Table 2.2.12-2

LD&IS Isolation Function Monitored Variables

Monitored Variables	LD&IS Isolation Functions (1)										
	Main Steam & Drain Lines	RWCU/ SDC Lines	ICS Lines	Fission Products Sampling Lines	DW LCW Sump Drain Line	DW HCW Sump Drain Line	Containment Purge & Vent Valves	CWS Lines to DW Air Coolers	FAPCS Process Lines	R /B HVAC Exhaust Ducts	FW Line
Turbine Area Ambient Temperature High	X	–	–	–	–	–	–	–	–	–	
MSL Tunnel Ambient Temperature High	X	X	–	–	–	–	–	–	–	–	
Isolation Condenser Vent Exhaust Radiation High	–	–	X	–	–	–	–	–	–	–	
MSL Flow Rate High	X	–	–	–	–	–	–	–	–	–	
MSL Pressure Low	X	–	–	–	–	–	–	–	–	–	
Reactor Water Level Low (Level 1, Level 2)	X	X	–	X	X	X	X	X	X	X	-
Reactor Water Level High (Level 8)	-	-	-	-	-	-	-	-	-	-	X
Feedwater Lines Differential Pressure	-	-	-	-	-	-	-	-	-	-	X(2)
DW Water Level High	-	-	-	-	-	-	-	-	-	-	X(3)

Table 2.2.12-2

LD&IS Isolation Function Monitored Variables

Monitored Variables	LD&IS Isolation Functions (1)										
	Main Steam & Drain Lines	RWCU/ SDC Lines	ICS Lines	Fission Products Sampling Lines	DW LCW Sump Drain Line	DW HCW Sump Drain Line	Containment Purge & Vent Valves	CWS Lines to DW Air Coolers	FAPCS Process Lines	R /B HVAC Exhaust Ducts	FW Line
Reactor Water Level Low – Low L0.5	-	-	-	-	-	-	-	-	-	-	X

(1) "X" indicates that isolation signal is provided to perform the designated isolation function(s) for the listed monitored variable.

(2) Feedwater lines isolation signal is a high FW lines differential pressure coincident with high drywell pressure.

(3) Feedwater lines isolation signal is Drywell Water Level High coincident with Drywell Pressure High.

Table 2.2.12-3

LD&IS leakage Source Monitored Variables

Monitored Variables	Leakage Source (2)																					
	Main Steam-lines		IC Steam-lines		IC Conden-sate Lines		CWS Lines		FAPCS Lines		RWCU/ SDC Lines		Feed-water Lines		GDCS Water		Reactor Vessel Head Seal		Deleted		Misc. Leaks	
Location (1)	I	O	I	O	I	O	I	O	I	O	I	O	I	O	I	O	I	O			I	O
Intersystem Leakage Radiation High	–	–	–	–	–	–	–	–	–	–	–	X	–	–	–	–	–	–			–	–
RWCU/SDC Differential Mass Flow High	–	–	–	–	–	–	–	–	–	–	–	X	–	–	–	–	–	–			–	–
Equip. Areas Differential Temperature High	–	X	–	–	–	–	–	–	–	–	–	X	–	–	–	–	–	–			–	–
MSL Tunnel or Turbine Building Area Ambient Temperature High	–	X	–	–	–	–	–	–	–	–	–	X	–	X	–	–	–	–			–	–
MSL Flow High	X	X			–	–	–	–	–	–	–	–	–	–	–	–	–	–			–	–
Isolation Condenser Steamline Flow High	-	-	X	X	-	-	-	-	-	-	-	-	-	-	-	-	-	-			-	-
Isolation Condenser Condensate Return Flow High	-	-	-	-	X	X	-	-	-	-	-	-	-	-	-	-	-	-			-	-

Table 2.2.12-3

LD&IS leakage Source Monitored Variables

Monitored Variables	Leakage Source (2)																					
	Main Steam-lines		IC Steam-lines		IC Conden-sate Lines		CWS Lines		FAPCS Lines		RWCU/ SDC Lines		Feed-water Lines		GDCS Water		Reactor Vessel Head Seal		Deleted		Misc. Leaks	
Location (1)	I	O	I	O	I	O	I	O	I	O	I	O	I	O	I	O	I	O			I	O
DW Air Cooler Cond. Flow High	X	–	X	–	–	–	X	–	X	–	X	–	X	–	X	–	–	–			X–	–
Vessel Head Flange Seal Pressure High	–	–	–	–	–	–	–	–	–	–	–	–	–	–	–	–	X	–			–	–
RB Equip. / Floor Drain Sump Pump Activity	–	X	–	X	–	X	–	X	–	X	–	X	–	X	–	–	–	–			–	X
SRV and SV Discharge Line Temperature High	X	–	–	–	–	–	–	–	–	–	–	–	–	–	–	–	–	–			–	–
DW Temperature High	X	–	X	–	–	–	X	–	X	–	X	–	X	–	X	–	–	–			X	–
DW Fission Product Radiation High	X	–	X	–	X	–	–	–	–	–	X	–	X	–	–	–	–	–			–	–
DW Equip. Drain Sump Level Change High	–	–	–	–	–	–	–	–	–	–	–	–	–	–	–	–	X	–			–	–
DW Floor Drain Sump Level Change High	X	–	X	–	X	–	X	–	X	–	X	–	X	–	X	–	–	–			X	–

Table 2.2.12-3

LD&IS leakage Source Monitored Variables

Monitored Variables	Leakage Source (2)																					
	Main Steam-lines		IC Steam-lines		IC Conden-sate Lines		CWS Lines		FAPCS Lines		RWCU/ SDC Lines		Feed-water Lines		GDCS Water		Reactor Vessel Head Seal		Deleted		Misc. Leaks	
Location (1)	I	O	I	O	I	O	I	O	I	O	I	O	I	O	I	O	I	O			I	O
DW Pressure High	X	–	X	–	–	–	–	–	–	–	X	–	X	–	–	–	–	–			–	–
RPV Water Level Low (L1, L2)	X	X	X	X	X	X	X	–	X	–	X	X		–	–	–	–	–			–	–
Feedwater Lines Differential Pressure	-	-	-	-	-	-	-	-	-	-	-	-	X	X	-	-	-	-			-	-
Main Steamline Pressure Low	-	X	-	-	-	-	-	-	-	-	-	-	-	-	-	-	-	-			-	X
Main Condenser Vacuum Low	-	X	-	-	-	-	-	-	-	-	-	-	-	-	-	-	-	-			-	X
Drywell Water Level	-	-	-	-	X	-	X	-	X	-	X	-	X	-	X	-	-	-			X	-

(1) "I" means inside DW leakage; "O" means outside DW leakage.

(2) "X" means control/alarm is associated with the monitored variable; "–" means not applicable.

Table 2.2.12-4

LD&IS Controls, Interlocks, and Bypasses

Parameter	Description
Control	Manual isolation (individually transfer open/close each CIV and MSIV)
	Manual reset (individually reset CIV and MSIV isolation logic to enable CIV and MSIV manual open function)
	MSIV test switches
	Isolation logic reset switches
Interlock	Reactor Mode Switch
	RPV water level low (Level 2) time delay (RTIF)
	RPV water level low (Level 2) time delay (SSLC/ESF)
	Turbine stop valve closed position
	RPV pressure
	DW pressure
Bypass	RTIF Division of sensors channel inputs to each division manual bypass switches
	RTIF Divisional actuator trip manual switches
	SSLC/ESF Division of sensors channel inputs to each manual bypass switch
	SSLC/ESF manual control bypasses (disables) the load driver/discrete output

Table 2.2.12-5

ITAAC For Leak Detection and Isolation System

Design Commitment	Inspections, Tests, Analyses	Acceptance Criteria
1. The LD&IS functional arrangement is described in Tables 2.2.12-1.	Inspections and/or tests will be conducted on the as-built configuration as defined in Tables 2.2.12-1.	Report(s) document(s) that the system conforms to the functional arrangement described in Tables 2.2.12-1.
2. The LD&IS isolation function monitored variables are described in Table 2.2.12-2.	See Subsection 2.2.15.	See Subsection 2.2.15.
3. The LD&IS leakage source monitored variables are described in Table 2.2.12-3.	See Subsection 2.2.15.	See Subsection 2.2.15.
4. The LD&IS controls, interlocks, and bypasses are defined in Table 2.2.12-4.	See Subsection 2.2.15.	See Subsection 2.2.15.
5. Conformance with IEEE Std. 603 requirements by the safety-related control system structures, systems, and components is addressed in Subsection 2.2.15.	See Subsection 2.2.15.	See Subsection 2.2.15.
6. The equipment qualification of LD&IS components defined in Table 2.2.12-1 is addressed in Section 3.8.	See Section 3.8.	See Section 3.8.
7. The LD&IS minimum inventory of alarms, displays, and status indications in the main control room are addressed in Section 3.3.	See Section 3.3.	See Section 3.3.

Table 2.2.12-5

ITAAC For Leak Detection and Isolation System

Design Commitment	Inspections, Tests, Analyses	Acceptance Criteria
8. The containment isolation components that correspond to the isolation functions defined in Table 2.2.12-2 are addressed in Subsection 2.15.1.	See Subsection 2.15.1.	See Subsection 2.15.1.
9. LD&IS software is developed in accordance with the software development program described in Section 3.2.	See Section 3.2.	See Section 3.2.

2.2.13 Engineered Safety Features Safety System Logic and Control

Design Description

The Safety System Logic and Control for the Engineered Safety Features systems (SSLC/ESF) addressed in this subsection performs the safety-related Emergency Core Cooling System (ECCS) control logic, the isolation logic for the Control Room Habitability System (CRHS), and controls the safety-related video display units (VDUs) for the Q-DCIS.

Functional Arrangement

(1) The SSLC/ESF functional arrangement is described in Table 2.2.13-1.

Functional Requirements

(2) The SSLC/ESF automatic functions, initiators, and associated interfacing systems are described in Table 2.2.13-2.

(3) The SSLC/ESF controls, interlocks, and bypasses in the main control room (MCR) are described in Table 2.2.13-3.

(4) Conformance with IEEE Std. 603 requirements by the safety-related control system structures, systems, and components is addressed in Subsection 2.2.15.

(5) The SSLC/ESF minimum inventory of alarms, displays, and status indications in the main control room (MCR) are addressed in Section 3.3.

(6) The equipment qualification of SSLC/ESF components described in Table 2.2.13-1 is addressed in Section 3.8.

(7) The SSLC/ESF software is developed in accordance with the software development program described in Section 3.2.

Inspections, Tests, Analyses and Acceptance Criteria

Table 2.2.13-4 defines the inspections, tests, and/or analyses, together with associated acceptance criteria for the SSLC/ESF system.

Table 2.2.13-1

SSLC/ESF Functional Arrangement

SSLC/ESF comprises four redundant, safety-related, Seismic Category I, divisions of trip logics and trip actuators.
SSLC/ESF receives inputs from, and sends outputs to interfacing systems as described in Tables 2.2.13-2 and 2.2.13-3.
SSLC/ESF logic is designed to provide a trip initiation by requiring a coincident trip of at least two divisions to cause the trip output.
Redundant safety-related power supplies are provided for each division.
SSLC/ESF uses “energized-to-trip” and “fail-as-is” logic.
ADS (SRVs and DPVs), ICS, GDCS, and SLC are actuated sequentially and/or in groups.
SSLC/ESF transmits and receives safety-related human system interface (HSI) information as described in Table 3.3-1, Item 6, to and from the safety-related VDUs.

Table 2.2.13-2

SSLC/ESF Automatic Functions, Initiators, and Associated Interfacing Systems

Function	Initiator	Interfacing System
ADS	RPV reactor water level low (Level 1)	NBS
GDCS Injection	RPV reactor water level low (Level 1)	NBS, GDCS
GDCS Equalizing Lines	RPV reactor water level low (Level 1)	NBS, GDCS
ICS	RPV reactor water level low (Level 1)	NBS, ICS
SLC	RPV reactor water level low (Level 1)	NBS, SLC, ATWS/SLC
CRHAVS emergency filtration mode	CRHA inlet air supply radiation high from PRMS	PRMS, CRHAVS

Table 2.2.13-3

SSLC/ESF Controls, Interlocks, and Bypasses

Parameter	Description
Control	ADS sequence actuation from VDUs in the MCR (one arm/fire switch per division)
	GDCS sequence actuation from VDUs in the MCR (one arm/fire switch per division)
Interlock	ECCS-LOCA confirmation time delay for ADS
	Group 1 SRV open
	Group 2 SRV open time delay
	Group 1 DPV open and SLC initiation time delay
	Group 2 DPV open time delay
	Group 3 DPV open time delay
	Group 4 DPV open time delay
	GDCS manual initiation interlock on low reactor pressure signal
	GDCS injection squib valve open time delay
	GDCS equalization line squib valve open time delay
	GDCS equalization line squib valve open interlock (RPV water level low (Level 0.5)
Bypass	SSLC/ESF Division of sensors division manual bypass switch
	SSLC/ESF manual control bypasses (disables) the load driver/discrete output

Table 2.2.13-4

ITAAC For Safety System Logic and Control/ESF System

Design Commitment	Inspections, Tests, Analyses	Acceptance Criteria
1. The SSLC/ESF functional arrangement is described in Table 2.2.13-1.	Inspection and/or tests will be conducted in the as-built configuration as described in Table 2.2.13-1.	Inspection and/or test report(s) exist(s) and conclude(s) that the system conforms to the functional arrangement as described in Table 2.2.13-1.
2. The SSLC/ESF automatic trip initiators and associated interfacing systems are described in Table 2.2.13-2.	Test(s) and type test(s) will be performed on the as-built system using simulated signals.	Test and type test report(s) document the system is capable of performing the functions described in Table 2.2.13-2.
3. The SSLC/ESF controls, interlocks, and bypasses in the main control room (MCR) are deecribed in Table 2.2.13-3.	Test(s) and type test(s) will be performed on the as-built system using simulated signals.	Test and type test report(s) document that the system controls and interlocks exist, can be retrieved in the main control room, or are performed in response to simulated signals and manual actions as described in Table 2.2.13-3.
4. Conformance with IEEE Std. 603 requirements by the safety-related control system structures, systems, and components is addressed in Subsection 2.2.15.	See Subsection 2.2.15.	See Subsection 2.2.15.
5. The SSLC/ESF minimum inventory of alarms, displays, and status indications in the main control room (MCR) are addressed in Section 3.3.	See Section 3.3.	See Section 3.3.
6. The equipment qualification of SSLC/ESF components is addressed in Section 3.8.	See Section 3.8.	See Section 3.8.

Table 2.2.13-4

ITAAC For Safety System Logic and Control/ESF System

Design Commitment	Inspections, Tests, Analyses	Acceptance Criteria
7. The SSLC/ESF software is developed in accordance with the software development program described in Section 3.2.	See Section 3.2.	See Section 3.2.

2.2.14 Diverse Instrumentation and Control Systems

Design Description

The Diverse Instrumentation and Control Systems (DICS) comprise the Anticipated Transients Without Scram Standby Liquid Control (ATWS/SLC) system and the Diverse Protection System (DPS).

Functional Arrangement

(1) DICS functional arrangement is defined in Tables 2.2.14-1 and 2.2.14-2.

Functional Requirements

(2) DICS automatic functions, initiators, and associated interfacing systems are defined in Table 2.2.14-2.

(3) DICS controls, interlocks and bypasses in the MCR are defined in Table 2.2.14-3.

(4) DICS minimum inventory of alarms, displays, controls, and status indications in the MCR are addressed in Section 3.3.

(5) The equipment qualification of DICS components defined in Table 2.2.14-1 is addressed in Section 3.8.

(6) The containment isolation components that correspond to the isolation functions defined in Table 2.2.14-2 are addressed in Subsection 2.15.1.

(7) Conformance with IEEE Std. 603 requirements by the safety-related control system structures, systems, and components defined in Table 2.2.14-1 is addressed in Subsection 2.2.15.

(8) Confirmatory analyses to support and validate the DPS design scope.

(9) Failure Modes and Effects Analysis (FMEA) per NUREG/CR-6303 of safety-related protection system platforms (RPS and SSLC/ESF) completed to validate the DPS diverse protection function.

(10) DICS software is developed in accordance with the software development program described in Section 3.2.

Inspections, Tests, Analyses and Acceptance Criteria

Table 2.2.14-4 defines the inspections, tests, and/or analyses, together with associated acceptance criteria for the DICS.

Table 2.2.14-1

DICS Functional Arrangement

ATWS/SLC system is safety-related.
ATWS/SLC system is housed within each of the divisional safety-related reactor trip and isolation function (RTIF) cabinets on a separate chassis from the other equipment within the cabinet.
RTIF cabinets housing the ATWS/SLC system are located within the divisional electrical rooms in the control building (CB) in a mild environment.
ATWS/SLC system logic is designed to provide a trip initiation by requiring coincident trip of at least two divisions to cause the trip output.
Each ATWS/SLC system is powered by a divisionally separated safety-related power supply.
ATWS/SLC has RPV dome pressure sensors and RPV water level sensors that are hardwired to their respective divisional controller.
DPS uses a triple redundant, digital controller, powered from nonsafety-related load group power supplies.
DPS triple redundant digital controllers require agreement in at least two channels out of three channels for a coincident trip actuation.
DPS is housed in a cabinet located in a mild environment in the CB.
DPS scram initiation logic is “energize-to-actuate” applied at the power return side of the control circuit going to the scram pilot valve solenoids.
DPS logic is “energize-to-actuate”.
DPS process variable sensors are different from those used by the RPS and SSLC/ESF.
DPS uses hardware and software that is separate and independent from that used by the RPS and SSLC/ESF.

Table 2.2.14-2

DICS Functions, Initiators, and Interfacing Systems [1]

Function	Initiator	Interfacing System
SLC system initiation (ATWS/SLC)	RPV dome pressure high and Startup Range Neutron Monitor (SRNM) signal greater than ATWS setpoint (SRNM ATWS permissive) with time delay	NMS, NBS, SLC
	RPV water level low (Level 2) and SRNM ATWS permissive with time delay	NBS, NMS, SLC
	RPV water level low (Level 1)	NBS, SLC
FWRB (ATWS/SLC)	RPV dome pressure high and SRNM ATWS permissive	NBS, NMS, FWCS
ADS inhibit (ATWS/SLC)	RPV water level low (Level 2) and APRM ATWS permissive	NBS, NMS, SSLC/ESF
	RPV dome pressure high and APRM ATWS permissive with time delay	NBS, NMS, SSLC/ESF
ADS inhibit (DPS)	RPV water level low (Level 2) and SRNM ATWS permissive	NBS, NMS
	RPV dome pressure high and SRNM ATWS permissive with time delay	NBS, NMS
ATWS ARI and FMCRD motor run-in (DPS)	RPV dome pressure high	NBS, CRD, RC&IS
	RPV water level low (Level 2)	NBS, CRD, RC&IS
	Manual ATWS mitigation signal present	CRD, RC&IS
	DPS scram command	CRD, RC&IS
	SCRRI/SRI signal and power levels remain elevated	NMS, CRD, RC&IS

Table 2.2.14-2

DICS Functions, Initiators, and Interfacing Systems [1]

Function	Initiator	Interfacing System
IC/PCCS expansion pool cross-connect valve opening (DPS)	Low IC/PCCS expansion pool water level	ICS
SCRRI/SRI (DPS)	RC&IS SCRRI signal	RC&IS, RPS
	ATLM SCRRI/SRI signal	RPS, RC&IS
	Generator load rejection signal	TGCS, RPS, RC&IS
	Loss of FW heating	C&FS, NMS, RPS, RC&IS
	Turbine trip signal	TGCS, RPS, RC&IS
	OPRM thermal neutron flux oscillation	NMS, RPS, RC&IS
Delayed FWRB (DPS)	SCRRI/SRI signal and power levels remain elevated	NMS, RC&IS, FWCS
	RPS scram command and power levels remain elevated	RPS, NMS, FWCS
DPS Scram (DPS)	RPV dome pressure high	NBS, RPS
	RPV water level high (Level 8)	NBS, RPS
	RPV water level low (Level 3)	NBS, RPS
	DW pressure high	CMS, RPS
	Suppression pool temperature high	CMS, RPS
	MSIV closure	NBS, RPS
	RPS Scram	RPS
	SCRRI/SRI command with power levels remaining elevated	NMS, RC&IS, RPS

Table 2.2.14-2

DICS Functions, Initiators, and Interfacing Systems [1]

Function	Initiator	Interfacing System
ADS initiation (DPS)	RPV water level low (Level 1)	NBS
GDCS initiation (DPS)	RPV water level low (Level 1)	NBS, GDCS
ICS initiation (DPS)	RPV water level low (Level 2)	NBS, ICS
	RPV water level low (Level 1)	NBS, ICS
	MSIV closure	NBS, ICS
	RPV dome pressure high	NBS, ICS
SLC system initiation (DPS)	RPV water level low (Level 1)	NBS, SLC
MSIV closure (DPS)	Steam flow high	NBS
	RPV pressure low	NBS
	RPV water level low (Level 2)	NBS
RWCU/SDC isolation valve closure (DPS)	Differential flow high	RWCU/SDC

Table 2.2.14-2

DICS Functions, Initiators, and Interfacing Systems [1]

Function	Initiator	Interfacing System
FW isolation (DPS)	Line differential pressure high coincident with high DW pressure	C&FS, NBS

[1] Function, Initiator or Interface change allowed if justified by confirmatory analysis and or protection systems FMEA in support of DPS scope validation (see Table 2.2.14-4, Items 8 and 9)

Table 2.2.14-3

DICS Controls, Interlocks and Bypasses[3]

Control	Manual initiation of ADS (DPS)[2]
	Manual initiation of ICS (DPS)[2]
	Manual initiation of GDCS squib-initiated injection valves (DPS)[2]
	Manual initiation of GDCS squib-initiated equalization valves (DPS)[2]
	Manual initiation of ATWS SLC (ATWS/SLC)[2]
	Manual initiation of ATWS ARI (ATWS/SLC)[2]
	Manual initiation of ATWS FWRB (ATWS/SLC)[2]
	Manual scram (DPS)[2]
	Manual MSIV isolation (DPS)[2]
	Manual inhibit of DPS ECCS functions under ATWS conditions[1] (DPS)[2]
	Manual inhibit of SSLC/ESF ECCS functions under ATWS conditions[1] (ATWS/SLC)[2]
	Manual SCRRI/SRI (DPS)[2]
Interlock	APRM ATWS Permissive (ATWS/SLC)[2]
	SRNM ATWS Permissive (DPS)[2]
	Reactor Mode (RPS, DPS)[2]
	Time Delays
Bypass	Division of sensor bypass (ATWS/SLC)[2]
	Sensor channel bypass (DPS)[2]

[1]For applicable ATWS conditions, refer to Initiator column, Table 2.2.14-2, for the Functions "ADS inhibit (ATWS/SLC)" and "ADS inhibit (DPS)"

[2]Implementing system is shown in parentheses.

[3]Changes to specific Controls and/or Interlocks Interface allowed if justified by confirmatory analyses and/or protection system FMEA in support of DPS scope validation (see Table 2.2.14-4, Items 8 and 9)

Table 2.2.14-4

ITAAC For Diverse Instrumentation and Controls

Design Commitment	Inspections, Tests, Analyses	Acceptance Criteria
1. The DICS functional arrangement is described in Tables 2.2.14-1 and 2.2.14-2.	Inspection(s), test(s), and/or type test(s) will be conducted on the as-built system configuration desribed in Tables 2.2.14-1 and 2.2.14-2.	Inspection(s), test(s), and/or type test(s) reports that document(s) the system's conformance to the functional arrangement described in Tables 2.2.14-1 and 2.2.14-2.
2. DICS automatic functions, initiators, and associated interfacing systems are described in Table 2.2.14-2.	a. Tests will be performed on the DICS nonsafety-related components will be conducted on the as-built system configuration using simulated signals. b. For safety-related DCIS components, see Subsection 2.2.15.	a. Test report(s) confirm that the DICS is capable of performing the functions described in Table 2.2.14-2. b. For safety-related DCIS components, see Subsection 2.2.15.
3. DICS interlocks and controls are described in Table 2.2.14-3.	a. Test(s) and type test(s) will be performed on the DICS nonsafety-related logic process interlocks and controls described in Table 2.2.14-3. b. For safety-related DCIS components, see Subsection 2.2.15.	a. Test report(s) document(s) that the DICS logic process interlocks and issue control signals described in Table 2.2.14-3. b. For safety-related DCIS components, see Subsection 2.2.15.
4. DICS minimum inventory of alarms, displays, controls, and status indications in the main control room are addressed in Section 3.3.	See Section 3.3.	See Section 3.3.

Table 2.2.14-4

ITAAC For Diverse Instrumentation and Controls

Design Commitment	Inspections, Tests, Analyses	Acceptance Criteria
5. The equipment qualification of DICS components decribed in Table 2.2.14-1 is addressed in Section 3.8.	The equipment qualification of DICS components decribed in Table 2.2.14-1 is addressed in Section 3.8.	See Section 3.8.
6. The containment isolation components that correspond to the isolation functions decribed in Table 2.2.14-2 are addressed in Subsection 2.15.1.	The containment isolation components that correspond to the isolation functions decribed in Table 2.2.14-2 are addressed in Subsection 2.15.1.	See Subsection 2.15.1.
7. Conformance with IEEE Std. 603 requirements by the safety-related control system structures, systems, and components decribed in Table 2.2.14-1 is addressed in Subsection 2.2.15.	Conformance with IEEE Std. 603 requirements by the safety-related control system structures, systems, and components decribed in Table 2.2.14-1 is addressed in Subsection 2.2.15.	See Subsection 2.2.15.
8. Confirmatory analyses support and validate the DPS design scope.	Confirmatory analyses to support and validate the DPS design scope will be performed.	Report(s) exist(s) and conclude(s) that the DPS design ensures releases during a common mode protection system failure coincident with the design basis events discussed in the Safety Analyses are within 10 CFR 100 limits (or percentage thereof) as specified in BTP HICB-19. {{Design Acceptance Criteria}}

Table 2.2.14-4

ITAAC For Diverse Instrumentation and Controls

Design Commitment	Inspections, Tests, Analyses	Acceptance Criteria
9. Failure Modes and Effects Analysis (FMEA) per NUREG/CR-6303 of safety-related protection system platforms (RPS and SSLC/ESF) completed to validate the DPS diverse protection function.	Complete FMEA per NUREG/CR-6303 to validate the DPS protection functions described in LTR NEDO-33251.	Report(s) exist(s) and conclude(s) that the completed FMEA for the RPS and SSLC/ESF safety-related platforms have been addressed in the DPS design scope. {{Design Acceptance Criteria}}
10. DICS software is developed in accordance with the software development program described in Section 3.2.	See Section 3.2.	See Section 3.2.

2.2.15 Instrumentation & Control Compliance With IEEE Std. 603

Design Description

The design descriptions related to IEEE Std. 603 criteria are provided below. Safety-related Instrumentation and Control systems are designed to the following criteria from IEEE Std. 603 as listed in Table 2.2.15-1. An X in the table identifies the system for which an ITAAC applies. Refer to the Tier 1 Subsections cited in the table for additional design descriptions applicable to the listed systems. Note that only the safety-related portions of the listed systems are addressed.

(1) Criterion 5.1, Single Failure: The listed systems are designed to ensure that safety-related functions required for design basis events (DBE) are performed in the presence of: (a) single detectable failures within safety-related systems concurrent with identifiable but non-detectable failures; (b) failures caused by the single failure; and (c) failures and spurious system actions that cause or are caused by the design basis event requiring the safety-related functions, as identified in the applicable failure modes and effects analysis (FMEA).

(2) Criteria 5.2 and 7.3, Completion of Protective Actions: The listed systems are designed so that, (a) once initiated (automatically or manually), the intended sequences of safety-related functions of the execute features continue until completion, and (b) after completion, deliberate operator action is required to return the safety-related systems to normal.

(3) Criterion 5.4, Equipment Qualification: The listed systems are qualified by type test, previous operating experience, or analysis, or any combination of these three methods, to substantiate that the safety-related system will be capable of meeting, the performance requirements specified in the design basis through the equipment qualification process described in Section 3.8.

(4) Criterion 5.5, System Integrity: The listed system's performance is adequate to ensure completion of protective actions over the range of transient and steady-state conditions of both the energy supply and the environment enumerated in the design basis through the equipment qualification process described in Section 3.8.

(5) Criteria 5.6 and 6.3, Independence: For the listed systems, physical, electrical, and communications independence between redundant portions of safety-related systems, between safety-related systems and the effects of a DBE, and between safety-related systems and nonsafety-related systems exist, as identified in the applicable FMEA.

(6) Criteria 5.7 and 6.5, Capability for Test & Calibration: The listed systems have the capability to have their equipment tested and calibrated while retaining their capability to accomplish their safety-related functions.

(7) Criterion 5.8, Information Displays: Information display systems are designed to be accessible to the operators, display variables for manually controlled actions, display system status information, provide indication of bypasses, and display post-accident monitoring variables in accordance with the HFE process described in Section 3.3 and the post accident monitoring design process described in Section 3.7.

(8) Criterion 5.9, Control of Access: The listed systems have features that permit administrative control of access to safety-related system equipment.

(9) Criterion 5.10, Repair: Safety-related systems are designed to facilitate the timely recognition, location, replacement, repair, and adjustment of malfunctioning equipment.

(10) Criterion 5.11, Identification: The listed safety-related systems are distinctly identified for each redundant portion.

(11) Criterion 5.12, Auxiliary Features: Other auxiliary features cannot degrade the safety-related systems below an acceptable level.

(12) Criterion 5.13, Multi-Unit Stations: The operation or failure of structures, systems, and components shared between units at a multi-unit generating station do not affect the performance of the safety-related functions of the systems listed in Table 2.2.15-1.

(13) Criterion 5.14, Human Factors Considerations: Human factors are incorporated in the design in accordance with the HFE design process described in Section 3.3.

(14) Criterion 5.15, Reliability: Analysis of the adequacy of the reliability of the safety-related system design is performed as part of the design reliability assurance program described in Section 3.6.

(15) Criteria 6.1 and 7.1, Automatic Control: The listed systems provide the means to automatically initiate and control the required safety-related functions.

(16) Criteria 6.2 and 7.2, Manual Control: The listed systems have features in the main control room to manually initiate and control the automatically initiated safety-related functions at the division level.

(17) Criterion 6.4, Derivation of System Inputs: Sense and command feature inputs for the listed systems are derived from signals that are direct measures of the desired variables specified in the design bases.

(18) Criteria 6.6 and 7.4, Operating Bypasses: The listed systems automatically (1) prevent the activation of an operating bypass, whenever the applicable permissive conditions for an operating bypass are not met, and (2) remove activated operating bypass(es), if the plant conditions change so that an activated operating bypass is no longer permissible.

(19) Criteria 6.7, 7.5, and 8.3, Maintenance Bypasses: The listed systems are capable of performing their safety-related functions, when one division is in maintenance bypass.

(20) Criterion 6.8, Setpoint: The listed system setpoints for safety-related functions are determined by a defined setpoint methodology.

(21) Criterion 8.1, Electrical Power Sources: The listed systems receive power from safety-related power supplies in the same division.

(22) Criterion 8.2, Non-electrical Power Sources: The listed systems receive non-electric power from safety-related sources.

Inspections, Tests, Analysis and Acceptance Criteria

Table 2.2.15-2 provides a definition of the inspections, tests, and/or analyses, together with and acceptance criteria for the systems listed in Table 2.2.15-1.

Table 2.2.15-1

ITAAC Applicability Matrix (2)

IEEE Std. 603 Criterion	NBS (2.1.2)	CRDS (2.2.2)	SLC System (2.2.4)	NMS (2.2.5)	RSS (2.2.6)	RPS (2.2.7)	LD&IS (2.2.12)	SSLC/ESF (2.2.13)	PRMS (2.3.1)	ICS (2.4.1)	GDCS (2.4.2)	CS* (2.15.1)	CMS (2.15.7)	SPTM (2.15.7)	RBHVS (2.16.2.1)	CBHVS (2.16.2.2)	EFU (2.16.2.3)
5.1	-	-	-	X	-	X	X	X	-	X	X	X	-	-	X	X	X
5.2 and 7.3	-	-	-	-	-	X	X	X	-	-	-	X	-	-	-	-	-
5.3	(3)	(3)	(3)	(3)	(3)	(3)	(3)	(3)	(3)	(3)	(3)	-	(3)	(3)	(3)	(3)	(3)
5.4	X	X	X	X	X	X	X	X	X	X	X	-	X	X	X	X	X
5.5	X	X	X	X	X	X	X	X	X	X	X	-	X	X	X	X	X
5.6 and 6.3	X	X	X	X	X	X	X	X	X	X	X	X	X	X	X	X	X
5.7 and 6.5	X	X	X	X	-	X	X	X	X	X	X	X	X	X	X	X	X
5.8	X	X	X	X	X	X	X	X	X	X	X	X	X	X	X	X	X
5.9	-	-	-	X	X	X	X	X	-	-	-	-	-	-	-	-	-
5.10	X	X	X	X	X	X	X	X	X	X	X	-	X	X	X	X	X
5.11	X	X	X	X	X	X	X	X	X	X	X	-	X	X	X	X	X
5.12	-	-	-	X	-	X	X	X	-	X	X	-	-	-	X	X	X
5.13	-	-	-	X	-	X	X	X	-	X	X	-	-	-	-	-	-
5.14	X	X	X	X	X	X	X	X	X	X	X	-	X	X	X	X	X
5.15	X	X	X	X	X	X	X	X	X	X	X	-	X	X	X	X	X
6.1 and 7.1	-	-	-	X	-	X	X	X	X	-	-	-	-	-	X	X	X
6.2 and 7.2	-	-	-	X	-	X	X	X	X	-	-	X	-	-	X	X	X
6.4	X	X	X	X	X	X	X	X	X	X	X	-	X	X	X	X	X
6.6 and 7.4	-	-	-	X	-	X	-	X	-	-	-	-	-	-	-	-	-
6.7, 7.5, and 8.3	-	-	-	X	-	X	-	X	-	-	-	-	-	-	X	X	X
6.8	X	-	X	X	-	X	X	X	X	-	-	-	X	X	-	-	-
8.1	X	X	X	X	X	X	X	X	X	X	X	-	X	X	X	X	X
8.2	-	X	-	-	-	-	X	-	-	X	X	-	-	-	X	X	X

(1) A dash means not-applicable.

(2) Safety-related portions only.

(3) No ITAAC is required for this criterion. See the description of the 10 CFR 50, Appendix B, Quality Assurance Program that is applied to the design, fabrication, construction, and test of the safety-related structures, systems, and components provided as part of the preliminary safety evaluation report as required by 10 CFR 50.34(a)(7).

*CS=Containment System

Table 2.2.15-2

ITAAC For IEEE Std. 603 Compliance Confirmation

Design Commitment	Inspections, Tests, Analyses	Acceptance Criteria
1. Criterion 5.1, Single Failure: The Criterion 5.1 systems listed in Table 2.2.15-1 are designed to ensure that safety-related functions required for design basis events (DBE) are performed in the presence of: (a) single detectable failures within safety-related systems concurrent with identifiable but non-detectable failures; (b) failures caused by the single failure; and (c) failures and spurious system actions that cause or are caused by the DBE requiring the safety-related functions, as identified in the applicable FMEA.	Block level FMEA of the Criterion 5.1 systems listed in Table 2.2.15-1 show that they perform safety-related functions required for design basis events in the presence of: (a) single detectable failures within safety-related systems concurrent with identifiable but non-detectable failures; (b) failures caused by the single failure; and (c) failures and spurious system actions that cause or are caused by the DBE requiring the safety-related functions, as identified in the applicable FMEA. {{Design Acceptance Criteria}}	Analysis report(s) conclude(s) that the systems identified in Table 2.2.15-1 for Criterion 5.1 ensure(s) that safety-related functions required for design basis events are performed in the presence of: (a) single detectable failures within safety-related systems concurrent with identifiable but non-detectable failures; (b) failures caused by the single failure; and (c) failures and spurious system actions that cause or are caused by the DBE requiring the safety-related functions, as identified in the applicable FMEA. {{Design Acceptance Critera}}
2. Criteria 5.2 and 7.3, Completion of Protective Actions: The Criteria 5.2 and 7.3 systems listed in Table 2.2.15-1 are designed so that, (a) once initiated (automatically or manually), the intended sequences of safety-related functions of the execute features continue until completion, and (b) after completion, deliberate operator action is required to return the safety-related systems to normal.	a. Inspection of the current revision of the simplified logic diagrams (SLDs) for the Criteria 5.2 and 7.3 systems listed in Table 2.2.15-1 verifies that the design shows (a) “seal-in” features that are provided to enable system-level safety-related functions to go to completion, and (b) “manual reset” features that are provided to require deliberate operation action to return the safety-related systems to normal. {{Design Acceptance Criteria}}	a. Inspection report(s) conclude(s) that the current revision of the SLDs show (a) “seal-in” features, and (b) “manual reset” features. {{Design Acceptance Criteria}}

Table 2.2.15-2

ITAAC For IEEE Std. 603 Compliance Confirmation

Design Commitment	Inspections, Tests, Analyses	Acceptance Criteria
	b. Test(s) for the Criteria 5.2 and 7.3 systems listed in Table 2.2.15-1 will be performed to show that (a) once initiated (automatically or manually), the intended sequences of safety-related functions of the "execute features" continue until completion, and (b) after completion, deliberate operator action is required to return the safety-related systems to normal.	b. Test report(s) conclude(s) that for the Criteria 5.2 and 7.3 systems listed in Table 2.2.15-1, (a) once initiated (automatically and manually), the intended sequences of safety-related functions of the "execute features" continue until completion, and (b) after completion, deliberate operator action is required to return the safety-related systems to normal.
3. Criterion 5.4, Equipment Qualification: The listed systems in Table 2.2.15-1 are qualified by type test, previous operating experience, or analysis, or any combination of these three methods, to substantiate that the safety-related system will be capable of meeting, the performance requirements specified in the design basis through the equipment qualification process described in Section 3.8.	See Section 3.8	See Section 3.8

Table 2.2.15-2

ITAAC For IEEE Std. 603 Compliance Confirmation

Design Commitment	Inspections, Tests, Analyses	Acceptance Criteria
4. Criterion 5.5, System Integrity: The listed system's performance in Table 2.2.15-1 is adequate to ensure completion of protective actions over the range of transient and steady-state conditions of both the energy supply and the environment enumerated in the design basis through the equipment qualification process described in Section 3.8.	See Section 3.8	See Section 3.8

Table 2.2.15-2

ITAAC For IEEE Std. 603 Compliance Confirmation

Design Commitment	Inspections, Tests, Analyses	Acceptance Criteria
5. Criteria 5.6 and 6.3, Independence: For the Criteria 5.6 and 6.3 systems listed in Table 2.2.15-1, there is physical, electrical, and communications independence between redundant portions of a safety-related system, between safety-related systems and the effects of a DBE, and between safety-related systems and nonsafety-related systems, as identified in the applicable FMEA.	a. Block level FMEA will be performed to verify that the designs of the Criteria 5.6 and 6.3 systems listed in Table 2.2.15-1 have physical, electrical, and communications independence between redundant portions of a safety-related system, between safety-related systems and the effects of a DBE, and between safety-related systems and nonsafety-related equipment, as identified in the applicable FMEA. {{Design Acceptance Criteria}}	a. Analysis report(s) conclude(s) that the designs of the Criteria 5.6 and 6.3 listed in Table 2.2.15-1 have physical, electrical, and communications independence between redundant portions of a safety-related system, between safety-related systems and the effects of a DBE, and between safety-related systems and nonsafety-related equipment, as identified in the applicable FMEA. {{Design Acceptance Criteria}}
	b. Inspection(s) will be performed to demonstrate that the Criteria 5.6 and 6.3 systems listed in Table 2.2.15-1 have physical independence between redundant portions of a safety-related system, between safety-related systems and the effects of a DBE, and between safety-related systems and nonsafety-related equipment, as identified in the applicable FMEA. .	b. Inspection report(s) conclude(s) that the Criteria 5.6 and 6.3 systems listed in Table 2.2.15-1 have physical independence between redundant portions of a safety-related system, between safety-related systems and the effects of a DBE, and between safety-related systems and nonsafety-related equipment, as identified in the applicable FMEA.

Table 2.2.15-2

ITAAC For IEEE Std. 603 Compliance Confirmation

Design Commitment	Inspections, Tests, Analyses	Acceptance Criteria
	c. Type test(s), test(s), and / or analysis(es) will be performed to demonstrate that the Criteria 5.6 and 6.3 systems communication interface modules listed in Table 2.2.15-1 have electrical and communications independence between redundant portions of a safety-related system, between safety-related systems and the effects of a DBE, and between safety-related systems and nonsafety-related equipment.	c. Type test(s), test(s), and / or analysis(es) report(s) conclude(s) that the Criteria 5.6 and 6.3 systems communication interface modules listed in Table 2.2.15-1 have electrical and communications independence between redundant portions of a safety-related system, between safety-related systems and the effects of a DBE, and between safety-related systems and nonsafety-related equipment.

Table 2.2.15-2

ITAAC For IEEE Std. 603 Compliance Confirmation

Design Commitment	Inspections, Tests, Analyses	Acceptance Criteria
6. Criteria 5.7 and 6.5, Capability for Test and Calibration: The Criteria 5.7 and 6.5 systems listed in Table 2.2.15-1 have the capability to have their equipment tested and calibrated while retaining their capability to accomplish their safety-related functions.	a. Inspection(s) of the current revision of the SLDs of the Criteria 5.7 and 6.5 systems listed in Table 2.2.15-1 will be performed to verify that both the automatic and manual circuitry have the capability to have the safety-related systems' equipment tested and calibrated while retaining the safety-related systems' capability to accomplish their safety-related functions. {{Design Acceptance Criteria}}	a. Inspection report(s) conclude(s) that the current revision of the SLDs of the Criteria 5.7 and 6.5 systems listed in Table 2.2.15-1 have the capability to have the safety-related systems' equipment tested and calibrated while retaining the safety-related systems' capability to accomplish their safety-related functions. {{Design Acceptance Criteria}}
	b. Test(s) of Criteria 5.7 and 6.5 systems listed in Table 2.2.15-1 will be performed to demonstrate that the design allows for tripping or bypass of individual functions in each safety-related system channel.	b. Test report(s) conclude(s) that for the Criteria 5.7 and 6.5 systems listed in Table 2.2.15-1 individual functions in each safety-related system channel can be tripped or bypassed.
	c. Test(s) of Criteria 5.7 and 6.5 systems listed in Table 2.2.15-1, will be performed to demonstrate that the digital computer-based I&C systems' self-test features confirm computer system operation on system initiation.	c. Test report(s) conclude(s) that for the Criteria 5.7 and 6.5 systems listed in Table 2.2.15-1, the digital computer-based I&C systems' self-test features confirm computer system operation on system initiation.

Table 2.2.15-2

ITAAC For IEEE Std. 603 Compliance Confirmation

Design Commitment	Inspections, Tests, Analyses	Acceptance Criteria
7. Criterion 5.8, Information Displays: Information display systems listed in Table 2.2.15-1 are designed to be accessible to the operators, display variables for manually controlled actions, display system status information, provide indication of bypasses, and display post-accident monitoring variables in accordance with the HFE process described in Section 3.3 and the post accident monitoring design process described in Section 3.7.	See Sections 3.3 and 3.7	See Section 3.3 and 3.7
8. Criterion 5.9, Control of Access: The design of the Criterion 5.9 systems listed in Table 2.2.15-1 have features that permit administrative control of access to safety-related system equipment.	Inspection of system design specification(s) for the Criterion 5.9 systems listed in Table 2.2.15-1 will be performed to confirm that access control features are specified for safety-related systems equipment. {{Design Acceptance Criteria}}	Inspection report(s) conclude(s) that within the system design specification(s) of the Criterion 5.9 systems listed in Table 2.2.15-1, access control features are specified for safety-related systems equipment. {{Design Acceptance Criteria}}

Table 2.2.15-2

ITAAC For IEEE Std. 603 Compliance Confirmation

Design Commitment	Inspections, Tests, Analyses	Acceptance Criteria
9. Criterion 5.10, Repair: Safety-related systems listed in Table 2.2.15-1 are designed to facilitate the timely recognition, location, replacement, repair, and adjustment of malfunctioning equipment.	Inspection of system design specification(s) for the Criterion 5.10 systems listed in Table 2.2.15-1 will be performed to confirm that safety-related systems are designed to facilitate the timely recognition, location, replacement, repair, and adjustment of malfunctioning equipment.	Inspection report(s) conclude(s) that the system design specification(s) of the Criterion 5.10 systems listed in Table 2.2.15-1 are designed to facilitate the timely recognition, location, replacement, repair, and adjustment of malfunctioning equipment.
10. Criterion 5.11, Identification: The listed safety-related systems in Table 2.2.15-1 are distinctly identified for each redundant portion.	a. Inspection(s) will be performed of the "current revision" of the project design manual. {{Design Acceptance Criteria}} b. Inspection(s) will be performed of the as-installed safety-related systems identification system.	a. Inspection report(s) conclude(s) that the "current revision of the project design manual describes a method that distinctly identifies each redundant portion of the listed safety-related systems in Table 2.2.15-1 and that does not rely on separate reference material. {{Design Acceptance Criteria}} b. Inspection report(s) conclude that the redundant portions of the as-installed safety-related systems listed in Table 2.2.15-1 are identified.

Table 2.2.15-2

ITAAC For IEEE Std. 603 Compliance Confirmation

Design Commitment	Inspections, Tests, Analyses	Acceptance Criteria
11. Criterion 5.12, Auxiliary Features: Other auxiliary features cannot degrade the safety-related systems listed in Table 2.2.15-1, below an acceptable level.	Block level FMEA will be performed to verify that the designs of other auxiliary features of the Criterion 5.12 systems listed in Table 2.2.15-1 do not have failure modes that can degrade the safety-related systems below an acceptable level. {{Design Acceptance Criteria}}	Analysis report(s) conclude that the designs of other auxiliary features of the Criterion 5.12 systems listed in Table 2.2.15-1 do not have failure modes that can degrade the safety-related systems below an acceptable level. {{Design Acceptance Criteria}}

Table 2.2.15-2

ITAAC For IEEE Std. 603 Compliance Confirmation

Design Commitment	Inspections, Tests, Analyses	Acceptance Criteria
12.Criterion 5.13, Multi-Unit Stations: The operation or failure of structures, systems, and components shared between units at a multi-unit generating station do not affect the performance of the safety-related functions of the systems listed in Table 2.2.15-1.	Analysis(es) will be performed of the safety-related systems plant-specific interfaces with shared structures, systems, and components at a multi-unit generating station using the following nonconcurrent criteria for single-failure analysis for shared systems: a. The safety-related systems of all units shall be capable of performing their required safety-related functions with a single failure assumed within the shared systems or within the auxiliary supporting features or other systems with which the shared systems interface. b. The safety-related systems of each unit shall be capable of performing their required safety-related functions, with a single failure initiated concurrently in each unit within the systems that are not shared.	Analysis report(s) conclude that the operation or failure of shared structures, systems, and components at a multi-unit generating station do not affect the performance of the safety-related functions of the systems listed in Table 2.2.15-1.

Table 2.2.15-2

ITAAC For IEEE Std. 603 Compliance Confirmation

Design Commitment	Inspections, Tests, Analyses	Acceptance Criteria
13. Criterion 5.14, Human Factors Considerations: Human factors are incorporated in the design in accordance with the HFE design process described in Section 3.3.	See Section 3.3.	See Section 3.3.
14. Criterion 5.15, Reliability: Analysis of the adequacy of the reliability of the safety-related system(s) design listed in Table 2.2.15-1 is performed as part of the design reliability assurance program described in Section 3.6.	See Section 3.6.	See Section 3.6.

Table 2.2.15-2

ITAAC For IEEE Std. 603 Compliance Confirmation

Design Commitment	Inspections, Tests, Analyses	Acceptance Criteria
15. Criteria 6.1 and 7.1, Automatic Control: The Criteria 6.1 and 7.1 systems listed in Table 2.2.15-1 provide the means to automatically initiate and control the required safety-related functions.	a. Inspection(s) will be performed of the current revision of the SLDs for the Criteria 6.1 and 7.1 systems listed in Table 2.2.15-1 to verify that the design automatically initiates and controls the required safety-related functions. {{Design Acceptance Criteria}}	a. Inspection report(s) conclude(s) that the current revision of the SLDs for the Criteria 6.1 and 7.1 systems listed in Table 2.2.15-1 show(s) that the design automatically initiates and controls the required safety-related functions. {{Design Acceptance Criteria}}
	b. Test(s) will be performed to demonstrate that the Criteria 6.1 and 7.1 systems listed in Table 2.2.15-1 automatically initiate and control the required safety-related functions.	b. Test report(s) conclude(s) that the Criteria 6.1 and 7.1 systems listed in Table 2.2.15-1 automatically initiate and control the required safety-related functions.

Table 2.2.15-2

ITAAC For IEEE Std. 603 Compliance Confirmation

Design Commitment	Inspections, Tests, Analyses	Acceptance Criteria
16. Criteria 6.2 and 7.2, Manual Control: The Criteria 6.2 and 7.2 systems listed in Table 2.2.15-1 have features in the main control room to manually initiate and control the automatically initiated safety-related functions at the division level.	a. Inspection(s) will be performed of the SLDs for the Criteria 6.2 and 7.2 systems listed in Table 2.2.15-1 to verify that they have main control room features that are capable of manually initiating and controlling automatically initiated safety-related functions at the division level. {{Design Acceptance Criteria}} b. Test(s) will be performed to demonstrate that the Criteria 6.2 and 7.2 systems listed in Table 2.2.15-1 have main control room features that manually initiate and control automatically initiated safety-related functions at the division level.	a. Inspection report(s) conclude(s) that the SLDs for the Criteria 6.2 and 7.2 systems listed in Table 2.2.15-1 have main control room features that are capable of manually initiating and controlling automatically initiated safety-related functions at the division level. {{Design Acceptance Criteria}} b. Test report(s) conclude(s) that the Criteria 6.2 and 7.2 systems listed in Table 2.2.15-1 have main control room features that manually initiate and control automatically initiated safety-related functions at the division level exist(s).

Table 2.2.15-2

ITAAC For IEEE Std. 603 Compliance Confirmation

Design Commitment	Inspections, Tests, Analyses	Acceptance Criteria
17. Criterion 6.4, Derivation of System Inputs: Sense and command feature inputs for the listed systems in Table 2.2.15-1 are derived from signals that are direct measures of the desired variables specified in the design bases.	Inspection(s) will be performed of the safety analyses and SLDs. {{Design Acceptance Criteria}}	Inspection report(s) conclude(s) that the sense and command feature inputs for the listed systems are derived from signals that are direct measures of the desired variables specified in the design bases. {{Design Acceptance Criteria}}

Table 2.2.15-2

ITAAC For IEEE Std. 603 Compliance Confirmation

Design Commitment	Inspections, Tests, Analyses	Acceptance Criteria
18. Criteria 6.6 and 7.4, Operating Bypasses: The Criteria 6.6 and 7.4 systems listed in Table 2.2.15-1 automatically (1) prevent the activation of an operating bypass, whenever the applicable permissive conditions for an operating bypass are not met, and (2) remove activated operating bypass(es), if the plant conditions change so that an activated operating bypass is no longer permissible.	a. Inspections(s) will be performed of the current revision of the SLDs for the Criteria 6.6 and 7.4 systems listed in Table 2.2.15-1 to verify that the systems are capable of automatically (1) preventing the activation of an operating bypass, whenever the applicable permissive conditions for an operating bypass are not met, and (2) removing activated operating bypasses, if the plant conditions change so that an activated operating bypass is no longer permissible. {{Design Acceptance Criteria}} b. Test(s) will be performed to demonstrate that the Criteria 6.6 and 7.4 systems listed in Table 2.2.15-1 automatically (1) prevent the activation of an operating bypass, whenever the applicable permissive conditions for an operating bypass are not met, and (2) remove activated operating bypass(es), if the plant conditions change so that an activated operating bypass is no longer permissible.	a. Inspection report(s) conclude that the current revision of the SLDs for the Criteria 6.6 and 7.4 systems listed in Table 2.2.15-1 show that the systems are capable of automatically (1) preventing the activation of an operating bypass, whenever the applicable permissive conditions for an operating bypass are not met, and (2) removing activated operating bypasses, if the plant conditions change so that an activated operating bypass is no longer permissible. {{Design Acceptance Criteria}} b. Test report(s) conclude(s) that the Criteria 6.6 and 7.4 systems listed in Table 2.2.15-1 automatically (1) prevent the activation of an operating bypass, whenever the applicable permissive conditions for an operating bypass are not met, and (2) remove activated operating bypass(es), if the plant conditions change so that an activated operating bypass is no longer permissible.

Table 2.2.15-2

ITAAC For IEEE Std. 603 Compliance Confirmation

Design Commitment	Inspections, Tests, Analyses	Acceptance Criteria
19. Criteria 6.7, 7.5, and 8.3 Maintenance Bypasses: The Criteria 6.7, 7.5, and 8.3 systems listed in Table 2.2.15-1 are capable of performing their safety-related functions, when one division is in maintenance bypass.	a. Inspections(s) will be performed of the current revision of the SLDs for the Criteria 6.7, 7.5 and 8.3 systems listed in Table 2.2.15-1 to verify that the safety-related systems are capable of performing their safety-related functions, when one division is in maintenance bypass. {{Design Acceptance Criteria}} b. Test(s) will be performed to demonstrate that the Criteria 6.7, 7.5 and 8.3 systems listed in Table 2.2.15-1 perform their safety-related functions, when one division is in maintenance bypass. c. Test(s) will be performed to demonstrate that the Criteria 6.7, 7.5, and 8.3 systems listed in Table 2.2.15-1 perform their safety-related functions, when one power supply division is in maintenance bypass. Criterion 5.15, Reliability:	a. Inspection report(s) conclude(s) that the current revision of the SLDs for the Criteria 6.7, 7.5, and 8.3 systems listed in Table 2.2.15-1 show that the safety-related systems are capable of performing their safety-related functions, when one division is in maintenance bypass. {{Design Acceptance Criteria}} b. Test report(s) conclude(s) that the Criteria 6.7, 7.5, and 8.3 systems listed in Table 2.2.15-1 perform their safety-related functions, when one division is in maintenance bypass. c. Test report(s) conclude(s) that the Criteria 6.7, 7.5, and 8.3 systems listed in Table 2.2.15-1 perform their safety-related functions, when one power supply division is in maintenance bypass.

Table 2.2.15-2

ITAAC For IEEE Std. 603 Compliance Confirmation

Design Commitment	Inspections, Tests, Analyses	Acceptance Criteria
20. Criterion 6.8, Setpoint: For the Criterion 6.8 systems listed in Table 2.2.15-1, setpoints for safety-related functions are defined, determined and implemented based on a defined setpoint methodology.	Inspection(s), test(s), and/or analysis(es) for the Criterion 6.8 systems listed in Table 2.2.15-1 will be performed to verify that the setpoints for safety-related functions are defined, determined and implemented based on a defined setpoint methodology.	Inspection(s), test(s), or analysis(es) report(s) for the Criterion 6.8 systems listed in Table 2.2.15-1 conclude(s) that the safety-related systems' setpoints for safety-related functions are defined, determined and implemented based on a defined setpoint methodology.
21. Criterion 8.1, Electrical Power Sources: The listed systems in Table 2.2.15-1 receive power from safety-related power supplies in the same division.	a. Inspection(s) will be performed of the "current revision" of the electrical one-line diagrams for the listed systems in Table 2.2.15-1. {{Design Acceptance Criteria}} b. Inspectior(s) will be performed on the listd systems in table 2.2.15-1	a. Inspection report(s) conclude(s) that the "current revision" of the electrical one-line diagrams show the listed systems in Table 2.2.15-1, receive power from safety-related power supplies in the same division. {{Design Acceptance Criteria}} b. Inspection report(s) conclude(s) that the listed systems in Table 2.2.15-1, receive power from safety-related power supplies in the same division.

Table 2.2.15-2

ITAAC For IEEE Std. 603 Compliance Confirmation

Design Commitment	Inspections, Tests, Analyses	Acceptance Criteria
22. Criterion 8.2, Non-electrical Power Sources: The listed systems in Table 2.2.15-1 receive non-electric power from safety-related sources.	a. Inspection(s) will be performed on the "current revision" of the P&ID of the listed systems in Table 2.2.15-1. {{Design Acceptance Criteria}}	a. Inspection report(s) conclude(s) that the "current revision" of the P&ID of the listed systems in Table 2.2.15-1 sho`w non-electric power from safety-related sources. {{Design Acceptance Criteria}}
	b. Inspection(s) will be performed on the as-built mechanical installation of the listed systems in Table 2.2.15-1.	b. Inspection report(s) conclude(s) that the listed systems in Table 2.2.15-1 receive non-electric power from safety-related sources.

2.3 RADIATION MONITORING SYSTEMS

The following subsections describe the major radiation monitoring systems for the ESBWR.

2.3.1 Process Radiation Monitoring System

Design Description

The Process Radiation Monitoring System (PRMS) monitors and provides for indication of radioactivity levels in process and effluent gaseous and liquid streams, initiates protective actions, and activates alarms in the Main Control Room (MCR) on high radiation signals. Alarms are also activated when a monitor becomes inoperative or goes upscale/downscale. The PRMS safety-related channel trip signals are provided as inputs to the Safety System Logic and Control/Engineered Safety Features (SSLC/ESF) for generation of protective action signals.

(1) The functional arrangement of the PRMS is as described in the Design Description of this Subsection 2.3.1 and Figure 2.3.1-1 in conjunction with Table 2.3.1-1.

(2) a. The safety-related PRMS subsystems as identified in Table 2.3.1-1 are powered from uninterruptible safety-related power sources.

b. The safety-related PRMS subsystems identified in Table 2.3.1-1 have electrical divisional separation.

(3) The safety-related process radiation monitors listed in Table 2.3.1-1 are seismic Category I and can withstand seismic design basis loads without loss of safety function.

(4) Safety-related PRMS subsystems provide the following:

e. Indications in MCR for radiation levels

f. Indications on SCUs for radiation levels

g. Alarms in MCR on radiation level exceeding setpoint

h. Indications on SCUs on radiation level exceeding setpoint.

i. Alarms in MCR on upscale/downscale or inoperative conditions.

j. Initiation of protective actions as noted in Table 2.3.1-1

(5) The nonsafety-related process monitors listed in Table 2.3.1-1 are provided.

(6) Safety-related PRMS subsystems initiate preventive actions to isolate and/or terminate plant processes or effluent releases as described in Table 2.3.1-1.

(7) Nonsafety-related PRMS subsystems provide the following:

a. Indications in MCR for radiation levels

b. Alarms in MCR on radiation level exceeding setpoint

c. Alarms in MCR on upscale/downscale or inoperative conditions.

(8) PRMS subsystem software is developed in accordance with the software development program described in Section 3.2.

Refer to Subsection 2.2.15 for "Instrumentation and Controls Compliance with IEEE Standard 603."

Inspections, Tests, Analyses and Acceptance Criteria

Table 2.3.1-2 provides a definition of the inspections, tests and/or analyses, together with the associated acceptance criteria for the PRMS. As appropriate, each of the ITAAC in Section 2.3.1 may be closed on a system-by-system basis throughout construction, in order that the PRMS subsystems may be placed in service. ITAAC for the liquid radwaste discharge radiation monitor and off-gas post-treatment radiation monitor also are located in Table 2.10.1-2 and Table 2.10.3-1, respectively.

Table 2.3.1-1

Process Radiation Monitors (Shown on Figure 2.3.1-1)

ID on Figure 2.3.1-1	Safety-Related	Description	Safety Function
1	No	MSL	N/A
2	Yes	Reactor Building HVAC Exhaust	Continuously monitors gross gamma quantity of radioactivity being exhausted from the contaminated area served by Reactor Building Contaminated Area (HVAC) Subsystem. The discharge point from duct is monitored with four physically and electrically independent and redundant divisions. In the event of radioactive releases due to system failures in the Reactor Building, or due to a fuel handling accident, RBVS dampers are closed, and exhaust fans are stopped.
3	Yes	Refuel Handling Area HVAC Exhaust	Continuously monitors gamma radiation levels in exhaust plenum of HVAC exhaust ducts in Refuel Handling Area of Reactor Building with four divisions of Radiation Detection Assemblies and channels. In the event of a radioactive release due to an accident while handling spent fuel, Reactor Building HVAC (RBVS) dampers are closed and exhaust fans are stopped.

Table 2.3.1-1

Process Radiation Monitors (Shown on Figure 2.3.1-1)

ID on Figure 2.3.1-1	Safety-Related	Description	Safety Function
4A, 4B	Yes	Control Building Air Intake HVAC	The Radiation Detection Assemblies continuously monitor the gamma radiation levels from each air intake plenum for the building or area containing the MCR and auxiliary rooms. The Control Room outside air intake is secured and the emergency air filtration units are started in the event of a high radiation level.
5	No	TB Normal Ventilation Air HVAC	NA
6	No	TB Compartment Area Air HVAC	NA
7	No	Offgas Pre-treatment	NA
8	No	Charcoal Vault Ventilation	NA
9	No	Offgas Post-treatment	NA
10	No	TB Combined Ventilation Exhaust	NA
11	No	Liquid Radwaste Discharge	NA
12	No	LCW DW Sump Discharge HCW DW Sump Discharge	NA
13A	No	RB/FBStack	NA
13B	No	TB Stack	NA
13C	No	RW Stack	NA

Table 2.3.1-1

Process Radiation Monitors (Shown on Figure 2.3.1-1)

ID on Figure 2.3.1-1	Safety-Related	Description	Safety Function
14	No	Main Turbine Gland Seal Steam Condenser Exhaust	NA
15A, 15B	No	Reactor Component Cooling Water Intersystem Leakage	NA
16	No	DW Fission Product	NA
17	No	Radwaste Building Ventilation Exhaust	NA
18	No	FB Combined Ventilation Exhaust	NA
19	Yes	Isolation Condenser Vent Exhaust	Continuously monitors the four Isolation Condenser Discharge Vents for gross gamma radiation by sixteen local detectors (four per isolation condenser vent). High radiation in the exhaust of a vent results in isolation of the affected Isolation Condenser loop.
20	No	TSC HVAC Air Intake	NA
21	Yes	FB General Area HVAC	Monitors the gross gamma radiation level in Fuel Building HVAC exhaust duct for the general area. In the event of an abnormal radioactivity release, Fuel Building HVAC exhaust dampers are closed and fans are stopped.

Table 2.3.1-1

Process Radiation Monitors (Shown on Figure 2.3.1-1)

ID on Figure 2.3.1-1	Safety-Related	Description	Safety Function
22	Yes	FB Fuel Pool HVAC	Monitors the gamma radiation level of air exiting spent fuel pool and equipment areas. In the event of radioactive releases due to an accident while handling spent fuel, Fuel Building HVAC exhaust dampers are closed and fans are stopped.
23	Yes	Containment Purge Exhaust	Monitors gross radiation level in exhaust duct leading from the primary containment. In the event of radioactive releases, monitors initiate closure of ventilation isolation dampers prior to exceeding radioactive effluent limits. In addition to closure of the RBVS isolation dampers, the RB HVAC exhaust fans are stopped.

Table 2.3.1-2

ITAAC For The Process Radiation Monitoring System

Design Commitment	Inspections, Tests, Analyses	Acceptance Criteria
1. The functional arrangement of the PRMS is as described in the Design Description of this Subsection 2.3.1 and Figure 2.3.1-1 in conjunction with Table 2.3.1-1.	Inspections shall be conducted on each as-built PRMS subsystem as shown in Figure 2.3.1-1 in conjunction with Table 2.3.1-1.	Inspection report(s) document that the as-built PRMS subsystems conform to the functional arrangement as described in the Design Description of this Subsection 2.3.1 and shown in Figure 2.3.1-1 in conjunction with Table 2.3.1-1.
2a. The safety-related PRMS subsystems as identified in Table 2.3.1-1 are powered from uninterruptible safety-related power sources. b. The safety-related PRMS subsystems identified in Table 2.3.1-1 have electrical divisional separation.	a. Inspections will be conducted to confirm that the PRMS safety-related subsystems identified in Table 2.3.1-1 are powered from uninterruptible safety-related power sources. b. Inspections of the as-built divisions will be conducted.	a. Inspection report(s) document that the safety-related PRMS subsystems identified in Table 2.3.1-1 receive electrical power from uninterruptible safety-related buses. b. Inspection report(s) document that the each subsystem division is physically separated from the other division in accordance with RG 1.75.

Table 2.3.1-2

ITAAC For The Process Radiation Monitoring System

Design Commitment	Inspections, Tests, Analyses	Acceptance Criteria
3. The safety-related process radiation monitors listed in Table 2.3.1-1 are seismic Category I and can withstand seismic design basis loads without loss of safety function .	i) Inspection will be performed to verify that the seismic Category I process radiation monitors identified in Table 2.3.1-1 are located in a seismic Category I structure.	i) Inspection report(s) document that the seismic Category I process radiation monitors identified in Table 2.3.1-1 are located in a seismic Category I structure.
	ii) Type tests, analyses, or a combination of type tests and analyses of seismic Category I process radiation monitors will be performed.	ii) Test/analysis reports exist and conclude that the seismic Category I process radiation monitors can withstand seismic design basis loads without loss of safety function.
	iii) Inspection will be performed for the existence of a report verifying that the as-installed process radiation monitors including anchorage are seismically bounded by the tested or analyzed conditions.	iii) Inspection reports exist and conclude that the as-installed process radiation monitors including anchorage are seismically bounded by the tested or analyzed conditions.

Table 2.3.1-2

ITAAC For The Process Radiation Monitoring System

Design Commitment	Inspections, Tests, Analyses	Acceptance Criteria
4. Safety-related PRMS subsystems provide the following: a. Indications in MCR for radiation levels b. Indications on SCUs for radiation levels c. Alarms in MCR on radiation level exceeding setpoint d. Indications on SCUs on radiation level exceeding setpoint e. Alarms in MCR on upscale/downscale or inoperative conditions. f. Initiation of actions described in Table 2.3.1-1.	a. Tests will be conducted by using a standard radiation source or portable calibration unit that exceeds a setpoint value that is preset for the testing. b. Inspections will be conducted to confirm that the as-built indications, alarms, and automatic initiation functions are met.	Test/inspection reports exist and document that the as-built indications, alarms, and automatic initiation functions are met.
5. The nonsafety-related process monitors listed in Table 2.3.1-1 are provided.	Inspection for the existence of the monitors will be performed.	Inspection reports document that the nonsafety-related monitors exist.
6. Safety-related PRMS subsystems initiate preventive actions to isolate and/or terminate plant processes or effluent releases as described in Table 2.3.1-1.	Tests will be conducted to confirm that the preventive actions are initiated and proper isolation and/or termination are secured on simulated high radiation levels. These tests will be performed in conjunction with each subsystem that contains the isolation boundaries.	Tests reports exist and document that the preventive actions requirements are met.

Table 2.3.1-2

ITAAC For The Process Radiation Monitoring System

Design Commitment	Inspections, Tests, Analyses	Acceptance Criteria
7. The nonsafety-related PRMS subsystem monitors which perform active/automatic control functions in order to control offsite doses below 10 CFR 20 limits provide the following: a. Indications in MCR for radiation levels b. Alarms in MCR on radiation level exceeding setpoint c. Alarms in MCR on upscale/downscale or inoperative conditions	a. Tests will be conducted by using a standard radiation source or portable calibration unit that exceeds a setpoint value that is preset for the testing. b. Inspections will be conducted to confirm that the as-built indication, alarm, and automatic initiation functions are met.	Test/inspection reports exist and document that the as-built indication, alarm, and automatic initiation functions are met.
8. PRMS subsystem software is developed in accordance with the software development program described in Section 3.2.	See Section 3.2.	See Section 3.2.

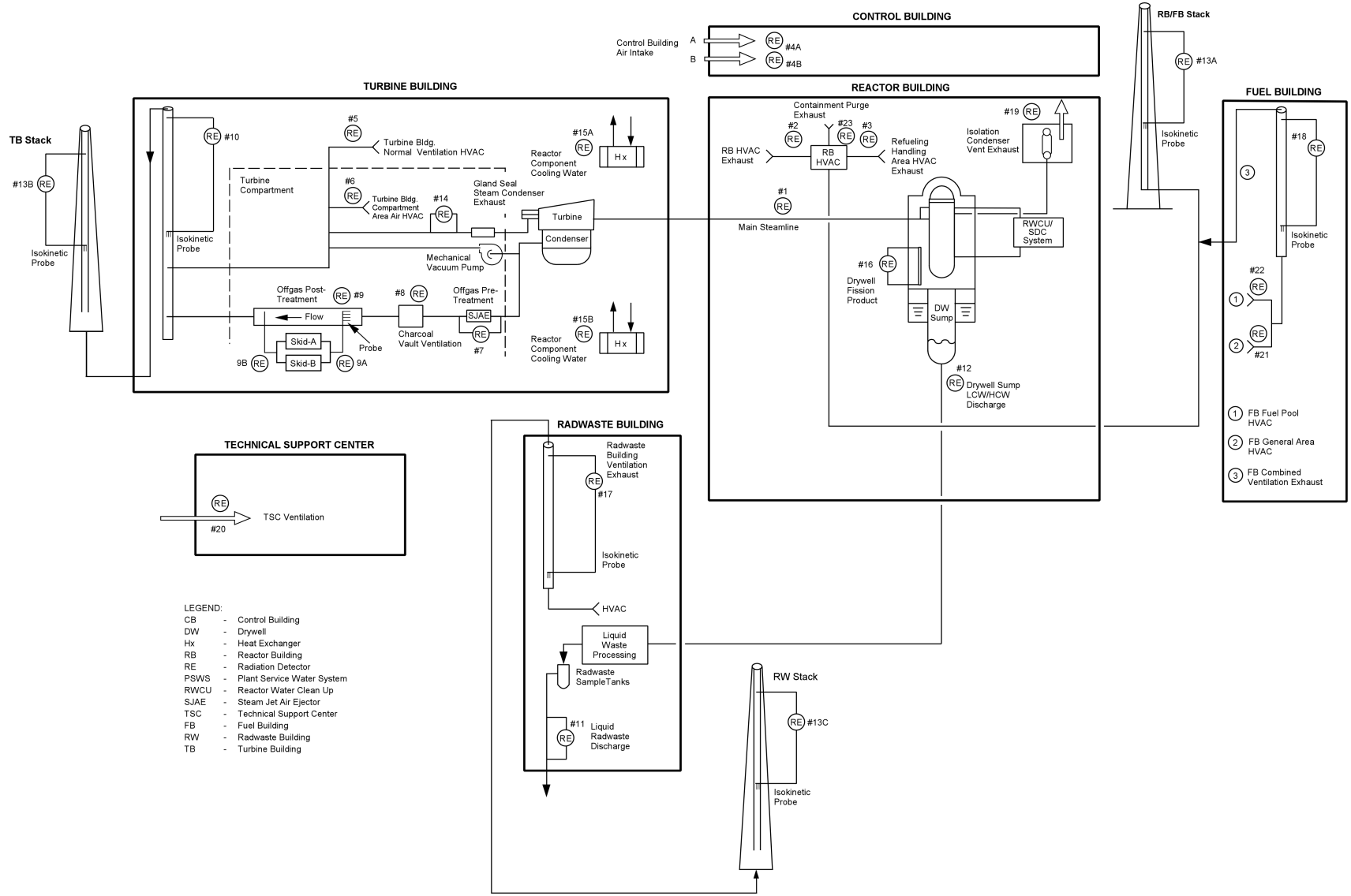

Note: See Table 2.3.1-1 for radiation detector numbers.

Figure 2.3.1-1. Process Radiation Monitoring System Diagram

2.3.2 Area Radiation Monitoring System

Design Description

The Area Radiation Monitoring System (ARMS) continuously monitors the gamma radiation levels within the various areas of the plant and provides an early warning to operating personnel when high radiation levels are detected so the appropriate action can be taken to minimize occupational exposure.

(1) The functional arrangement (location) of the ARMS equipment is as listed on Table 2.3.2-1.

(2) Each ARM channel listed in Table 2.3.2-1 initiates a MCR alarm and a local audible alarm (if provided) when the radiation level exceeds a preset limit.

(3) Each ARM channel listed in Table 2.3.2-1 is provided with indication of radiation level.

Inspections, Tests, Analyses and Acceptance Criteria

Table 2.3.2-2 provides a definition of the inspections, tests, and/or analyses, together with associated acceptance criteria for the Area Radiation Monitoring system.

Table 2.3.2-1

ARM Locations

Area	Description & Location
Reactor Building	RB Refueling Floor Area #1
Reactor Building	RB Refueling Floor Area #2
Reactor Building	RB New Fuel Buffer Pool
Reactor Building	RB New Fuel Buffer Pool
Reactor Building	RB RWCU/SDC Pump
Reactor Building	RB Sump Pumps
Reactor Building*	RB RWCU/SDC Train A Heat Exchanger
Reactor Building*	RB RWCU/SDC Train B Heat Exchanger
Reactor Building	RB Lower Equipment Hatch
Reactor Building	RB Lower Personnel Hatch
Reactor Building	FMCRD HCU Room B
Reactor Building	FMCRD HCU Room D
Reactor Building	RB RWCU/SDC Filter Demineralizer Area
Reactor Building	RB Radiological Control Area Entrance
Reactor Building	RB H2/O2 Monitoring (CMS) Skid
Reactor Building	RB H2/O2 Monitoring (CMS) Skid Panel
Reactor Building	Instrument Rack Area #1
Reactor Building	Instrument Rack Area #2
Reactor Building	Instrument Rack Area #3
Reactor Building	Instrument Rack Area #4
Reactor Building	Instrument Rack Area #5
Reactor Building	Instrument Rack Area #6
Reactor Building	Instrument Rack Area #7
Reactor Building	Instrument Rack Area #8
Reactor Building	RB IFTS Maintenance Room (Multiple)
Reactor Building	Fuel Handling Machine
Reactor Building	RB Remote Shutdown Panel A Area
Reactor Building	RB Remote Shutdown Panel B Area
Fuel Building	FB Spent Fuel Floor
Fuel Building	Fuel Handling Machine

Table 2.3.2-1
ARM Locations

Area	Description & Location
Fuel Building	FB Fuel Transfer Cask Area
Fuel Building	FB FAPCS Heat Exchangers
Fuel Building	FB FAPCS Heat Exchangers
Fuel Building*	FB FAPCS Backwash Transfer Pumps
Fuel Building	FB Sump Pumps
Fuel Building	RB Ground Grade Access Pathway
Fuel Building	FB Wash Down Bay Entry Door
Fuel Building	FB IFTS Fuel Bldg Isolation Valve Room (Inside)
Radwaste Building	RW Electrical Panel Area
Radwaste Building	RW Control Room
Radwaste Building	RW Resin Pump
Radwaste Building	RW Resin Transfer Pump Room
Radwaste Building	RW Trailer Access Area
Radwaste Building*	RW Liquid Radioactive Waste Treatment Area
Radwaste Building*	RW Wet Solid Radioactive Waste Treatment Area
Radwaste Building*	RW Dry Solid Waste Treatment Area
Radwaste Building*	RW Packaged Waste Staging Area
Turbine Building*	Main Condenser Vault Area
Turbine Building*	Feedwater Heater Drain Cooler 1 A/B/C Room
Turbine Building	H2 and O2 Analyzer Room B
Turbine Building	Condensate Pumps Room
Turbine Building*	Low Pressure Heater Area
Turbine Building*	Feedwater Heater 4 and Feedwater Storage Tank Room
Turbine Building*	Turbine Bldg Steam Tunnel
Turbine Building*	Condensate Drain Tank and Steam Jet Air Ejector/H2 Recombiner and Cooler Room B
Turbine Building*	Steam Jet Air Ejector/H2 Recombiner and Cooler Room A
Turbine Building*	Feedwater Heater 5B and 6B Room
Deleted	
Deleted	
Deleted	

Table 2.3.2-1
ARM Locations

Area	Description & Location
Deleted	
Deleted	
Deleted	
Deleted	
Deleted	
Deleted	
Deleted	
Turbine Building	Condensate Filter Access Hatch Room
Turbine Building	Corridor/Turbine Building Operating Floor
Turbine Building	Corridor/Turbine Operating Floor
Turbine Building	Crane Travel Area
Turbine Building	Equipment Main Access Area
Turbine Building	RCCWS Pump/Exchanger Room A
Turbine Building*	Offgas Charcoal Adsorber Vessel Vault
Turbine Building	Condensate Pleated Filter Valve/Condensate Filter Transfer Pumps/condensate Flow Control Valve Station Room
Turbine Building	Condensate Pleated Filter Valve/Condensate Filter Transfer Pumps/Condensate Flow Control Valve Station Room
Turbine Building	Condenser Sampling Pump Room A
Turbine building	Condenser Sampling Pump Room B
Turbine Building	Condensate Deep Bed Demineralizer Valve Room
Turbine Building	H2 and O2 Analyzer Room A
Turbine Building*	Feedwater Heater 5A and 6A Room
Turbine Building*	Feedwater heater 7B Room
Turbine Building*	Feedwater Heater 7A Room
Turbine Building	Turbine Bldg Sampling/Drain Sump C Room
Turbine Building	Corridor/Exhaust Duct Area
Turbine Building	RCCWS Pump/Exchanger Room B
Turbine Building*	Main Condenser Vault Area
Control Building	Main Control Room

* ARMs located in accessible areas where abnormal plant evolutions or anticipated operational occurrences can potentially result in dose rate increases of 1mSv/hr (100mRem/hr) or more.

Table 2.3.2-2

ITAAC For The Area Radiation Monitoring System

Design Commitment	Inspections, Tests, Analyses	Acceptance Criteria
1. The functional arrangement (location) of the ARMS equipment is as listed on Table 2.3.2-1.	Inspection of the as-built system will be conducted.	Report(s) document that inspections confirm the as-built ARM system locations conform to Table 2.3.2-1.
2. Each ARM channel listed in Table 2.3.2-1 initiates a MCR alarm and a local audible alarm (if provided) when the radiation level exceeds a preset limit.	Tests will be conducted using a simulated high radiation level signal to verify that the MCR alarm and local alarm (if provided) is on when the simulated signal exceeds a preset setpoint.	Reports(s) document tests results which confirm that the MCR alarm and local audible alarm (if provided) are initiated when the simulated radiation level exceeds a preset limit.
3. Each ARM channel listed in Table 2.3.2-1 is provided with indication of radiation level.	Tests will be conducted using a simulated high radiation signal to verify that the indications for each ARM channel responds to the simulated high radiation signal.	Reports(s) document tests results which confirm that the indications for each ARM channel responds to the simulated high radiation signal.

2.4 CORE COOLING SYSTEMS USED FOR ABNORMAL EVENTS

The following subsections describe the core cooling systems in response to AOOs and accidents.

2.4.1 Isolation Condenser System

Design Description

The Isolation Condenser System (ICS), removes decay heat from the RPV when the reactor is isolated. Decay heat removal keeps the RPV pressure below the SRV pressure setpoint. ICS consists of four independent trains, each containing a heat exchanger that condenses steam on the tube side and transfers heat by heating and boiling water in the IC/PCC pool, which is then vented to the atmosphere. The ICS is as shown in Figure 2.4.1-1.

Functional Arrangement

(1) The functional arrangement of the IC System is as described in the Design Description of this Section 2.4.1, Tables 2.4.1-1 and 2, and Figure 2.4.1-1.

(2) ASME Code Section III

a1. The components identified in Table 2.4.1-1 as ASME Code Section III are designed in accordance with ASME Code Section III requirements and seismic Category I requirements.

a2. The components identified in Table 2.4.1-1 as ASME Code Section III are designed, fabricated, installed, and inspected in accordance with ASME Code Section III requirements.

a3. The components identified in Table 2.4.1-1 as ASME Code Section III are fabricated, installed, and inspected in accordance with ASME Code Section III requirements.

b1. The piping identified in Table 2.4.1-1 as ASME Code Section III is designed, fabricated, installed, and inspected in accordance with ASME Code Section III requirements.

b2. The as-built piping identified in Table 2.4.1-1 as ASME Code Section III shall be reconciled with the piping design requirements.

b3. The piping identified in Table 2.4.1-1 as ASME Code Section III is fabricated, installed, and inspected in accordance with ASME Code Section III requirements.

(3) Pressure Boundary Welds

a. Pressure boundary welds in components identified in Table 2.4.1-1 as ASME Code Section III meet ASME Code Section III requirements.

b. Pressure boundary welds in piping identified in Table 2.4.1-1 as ASME Code Section III meet ASME Code Section III requirements.

(4) Pressure Boundary Integrity

a. The components identified in Table 2.4.1-1 as ASME Code Section III retain their pressure boundary integrity at their design pressure.

b. The piping identified in Table 2.4.1-1 as ASME Code Section III retains its pressure boundary integrity at its design pressure.

(5) a. The seismic Category I components identified in Tables 2.4.2-1 can withstand seismic design basis loads without loss of safety function.

(6) a. Each of the IC System divisions (or safety-related loads/components) identified in Table 2.4.1-2 is powered from its respective safety-related division.

b. In the IC System, independence is provided between safety-related divisions, and between safety-related divisions and non-safety related equipment.

(7) (Deleted)

(8) Control Room displays provided for the IC System are defined in Table 2.4.1-2.

(9) Re-positionable (NOT squib) valves designated in Table 2.4.1-1 as having an active safety-related function open, close, or both open and also close under differential pressure, fluid flow, and temperature conditions.

(10) The pneumatically operated valve(s) designated in Table 2.4.1-1 fail in the mode listed if either electric power to the valve actuating solenoid is lost, or pneumatic pressure to the valve(s) is lost.

(11) The equipment qualification of IC system components is addressed in Tier 1 Section 3.8.

(12) The containment isolation portions of the IC System are addressed in Tier 1 Subsection 2.15.1.

(13) Each condensate return valve (V-5 and V-6) shown on Figure 2.4.1-1 will open to initiate the ICS.

(14) The normally open ICS isolation valves (V-1, V-2, V-3 and V-4) in the steam supply and condensate return lines close automatically on receipt of high vent line radiation from the Process Radiation Monitoring System (PRMS).

(15) The normally open ICS isolation valves (V-1, V-2, V-3 and V-4) in the steam supply and condensate return lines close automatically on receipt of signals from the LD&IS.

(16) Each ICS train normally closed condensate return valve (V-5) opens upon receipt of the following automatic actuation signals:

RPV high pressure following a time delay

RPV water level below level 2 following a time delay

RPV water level below level 1

Loss of power to 2 of 4 reactor feed pumps with the reactor mode switch in RUN

MSIVs in 2 of 4 steam lines less than fully open (≤92%) with the reactor mode switch in RUN.

(17) Each ICS train normally closed condensate return bypass valve (V-6) opens upon receipt of the following automatic actuation signals:

a. RPV high pressure following a time delay

b. RPV water level below level 2 following a time delay

c. RPV water level below level 1

d. Loss of power to 2 of 4 reactor feed pumps with the reactor mode switch in RUN

e. MSIVs in 2 of 4 steam lines less than fully open (≤92%) with the reactor mode switch in RUN.

(18) The two-series, solenoid-operated bottom vent line valves (V-9, and V-10) open on high RPV pressure after time delay following condensate return or condensate bypass valve opening signals.

(19) The three vent lines with two-series, solenoid-operated top and bottom vent line valves (V-7 & V-8; V-9 & V-10; V-11 & V-12) open on manual actuation only if condensate return or condensate bypass valve is not closed.

(20) The accumulator for the pneumatic isolation valves (V-1, V-2, V-3 and V-4) in the ICS steam supply and condensate return valves have the capacity to close the valves three times with the drywell at the drywell design pressure.

(21) Upon loss of pneumatic pressure to the condensate bypass valve (V-6), the valve strokes to the fully open position.

(22) Each ICS train minimum heat removal capacity with reactor at or above normal operating pressure.

(23) Each ICS train provides at least the minimum drainable liquid volume available for return to the RPV.

(24) The Dryer/Separator Pool and Reactor Well provide sufficient makeup water volume to the IC/PCC expansion pool to support operation of the ICS and PCCS for the first 72 hours.

(25) The IC/PCC pools are safety-related and Seismic Category 1.

(26) Each ICS flow path is constrained to a maximum flow area at transitions between Class 1 piping from containment to Class 2 piping outside containment in order to limit flow in the event of a break.

(27) ICS software is developed in accordance with the software development program described in Section 3.2.

(28) Conformance with IEEE Standard 603 requirements by the safety-related control system structures, systems, and components is addressed in Subsection 2.2.15.

Inspections, Tests, Analyses and Acceptance Criteria

Table 2.4.1-3 provides a definition of the inspections, test and/or analyses, together with associated acceptance criteria for the Isolation Condenser System.

Table 2.4.1-1

ICS Mechanical Equipment

Equipment Name (Description)	Equipment Identifier See Figure 2.4.1-1	ASME Code Section III	Seismic Cat. I	RCPB Component	Containment Isolation Valve.	Remotely Operated	Loss of Motive Power Position
Train A Isolation Condenser	---	---	---	---	---	---	---
IC (A) Heat Exchanger	---	Yes	Yes	No	No	N/A	N/A
Inline Vessel (A)	---	Yes	Yes	Yes	No	N/A	N/A
IC (A) Steam Supply Line	P-1(A)	Yes	Yes	Yes	No	N/A	N/A
IC (A) Steam Supply Line Isolation Valve	V-1(A)	Yes	Yes	Yes	Yes	Yes	As-Is
IC (A) Steam Supply Line Isolation Valve	V-2(A)	Yes	Yes	Yes	Yes	Yes	As-Is
IC (A) Condensate Return Line	P-2(A)	Yes	Yes	Yes	No	N/A	N/A
IC (A) Condensate Return Line Isolation Valve	V-3(A)	Yes	Yes	Yes	Yes	Yes	As-Is
IC (A) Condensate Return Line Isolation Valve	V-4(A)	Yes	Yes	Yes	Yes	Yes	As-Is
IC (A) Condensate Return Line Valve	V-5(A)	Yes	Yes	Yes	No	Yes	As-Is

Table 2.4.1-1

ICS Mechanical Equipment

Equipment Name (Description)	Equipment Identifier See Figure 2.4.1-1	ASME Code Section III	Seismic Cat. I	RCPB Component	Containment Isolation Valve.	Remotely Operated	Loss of Motive Power Position
IC (A) Condensate Return Line Bypass Valve	V-6(A)	Yes	Yes	Yes	No	Yes	Open
Upper IC (A) Header Vent Line	---	Yes	Yes	No	No	N/A	N/A
Upper IC (A) Header Vent Line Valve	V-7(A)	Yes	Yes	No	Yes	Yes	Closed
Upper IC (A) Header Vent Line Valve	V-8(A)	Yes	Yes	No	Yes	Yes	Closed
Lower IC (A) Header Vent Line	---	Yes	Yes	No	No	N/A	N/A
Lower IC (A) Header Vent Line Valve	V-9(A)	Yes	Yes	No	Yes	Yes	Closed
Lower IC (A) Header Vent Line Valve	V-10(A)	Yes	Yes	No	Yes	Yes	Closed
Lower IC (A) Header Vent Line Valve	V-11(A)	Yes	Yes	No	Yes	No	NA
Lower IC (A) Header Vent Line Valve	V-12(A)	Yes	Yes	No	Yes	Yes	Open

Table 2.4.1-1
ICS Mechanical Equipment

Equipment Name (Description)	Equipment Identifier See Figure 2.4.1-1	ASME Code Section III	Seismic Cat. I	RCPB Component	Containment Isolation Valve.	Remotely Operated	Loss of Motive Power Position
Train B Isolation Condenser	---	---	---	---	---	---	---
IC (B) Heat Exchanger	---	Yes	Yes	No	No	N/A	N/A
Inline Vessel (B)	---	Yes	Yes	Yes	No	N/A	N/A
IC (B) Steam Supply Line	P-1(B)	Yes	Yes	Yes	No	N/A	N/A
IC (B) Steam Supply Line Isolation Valve	V-1(B)	Yes	Yes	Yes	Yes	Yes	As-Is
IC (B) Steam Supply Line Isolation Valve	V-2(B)	Yes	Yes	Yes	Yes	Yes	As-Is
IC (B) Condensate Return Line	P-2(B)	Yes	Yes	Yes	No	N/A	N/A
IC (B) Condensate Return Line Isolation Valve	V-3(B)	Yes	Yes	Yes	Yes	Yes	As-Is
IC (B) Condensate Return Line Isolation Valve	V-4(B)	Yes	Yes	Yes	Yes	Yes	As-Is
IC (B) Condensate Return Line Valve	V-5(B)	Yes	Yes	Yes	No	Yes	As-Is

Table 2.4.1-1

ICS Mechanical Equipment

Equipment Name (Description)	Equipment Identifier See Figure 2.4.1-1	ASME Code Section III	Seismic Cat. I	RCPB Component	Containment Isolation Valve.	Remotely Operated	Loss of Motive Power Position
IC (B) Condensate Return Line Bypass Valve	V-6(B)	Yes	Yes	Yes	No	Yes	Open
Upper IC (B) Header Vent Line	---	Yes	Yes	No	No	N/A	N/A
Upper IC (B) Header Vent Line Valve	V-7(B)	Yes	Yes	No	Yes	Yes	Closed
Upper IC (B) Header Vent Line Valve	V-8(B)	Yes	Yes	No	Yes	Yes	Closed
Lower IC (B) Header Vent Line	---	Yes	Yes	No	No	N/A	N/A
Lower IC (B) Header Vent Line Valve	V-9(B)	Yes	Yes	No	Yes	Yes	Closed
Lower IC (B) Header Vent Line Valve	V-10(B)	Yes	Yes	No	Yes	Yes	Closed
Lower IC (B) Header Vent Line Valve	V-11(B)	Yes	Yes	No	Yes	No	NA
Lower IC (B) Header Vent Line Valve	V-12(B)	Yes	Yes	No	Yes	Yes	Open

Table 2.4.1-1

ICS Mechanical Equipment

Equipment Name (Description)	Equipment Identifier See Figure 2.4.1-1	ASME Code Section III	Seismic Cat. I	RCPB Component	Containment Isolation Valve.	Remotely Operated	Loss of Motive Power Position
Train C Isolation Condenser	---	---	---	---	---	---	---
IC (C) Heat Exchanger	---	Yes	Yes	No	No	N/A	N/A
Inline Vessel (C)	---	Yes	Yes	Yes	No	N/A	N/A
IC (C) Steam Supply Line	P-1(C)	Yes	Yes	Yes	No	N/A	N/A
IC (C) Steam Supply Line Isolation Valve	V-1(C)	Yes	Yes	Yes	Yes	Yes	As-Is
IC (C) Steam Supply Line Isolation Valve	V-2(C)	Yes	Yes	Yes	Yes	Yes	As-Is
IC (C) Condensate Return Line	P-2(C)	Yes	Yes	Yes	No	N/A	N/A
IC (C) Condensate Return Line Isolation Valve	V-3(C)	Yes	Yes	Yes	Yes	Yes	As-Is
IC (C) Condensate Return Line Isolation Valve	V-4(C)	Yes	Yes	Yes	Yes	Yes	As-Is
IC (C) Condensate Return Line Valve	V-5(C)	Yes	Yes	Yes	No	Yes	As-Is

Table 2.4.1-1

ICS Mechanical Equipment

Equipment Name (Description)	Equipment Identifier See Figure 2.4.1-1	ASME Code Section III	Seismic Cat. I	RCPB Component	Containment Isolation Valve.	Remotely Operated	Loss of Motive Power Position
IC (C) Condensate Return Line Bypass Valve	V-6(C)	Yes	Yes	Yes	No	Yes	Open
Upper IC (C) Header Vent Line	---	Yes	Yes	No	No	N/A	N/A
Upper IC (C) Header Vent Line Valve	V-7(C)	Yes	Yes	No	Yes	Yes	Closed
Upper IC (C) Header Vent Line Valve	V-8(C)	Yes	Yes	No	Yes	Yes	Closed
Lower IC (C) Header Vent Line	---	Yes	Yes	No	No	N/A	N/A
Lower IC (C) Header Vent Line Valve	V-9(C)	Yes	Yes	No	Yes	Yes	Closed
Lower IC (C) Header Vent Line Valve	V-10(C)	Yes	Yes	No	Yes	Yes	Closed
Lower IC (C) Header Vent Line Valve	V-11(C)	Yes	Yes	No	Yes	No	NA
Lower IC (C) Header Vent Line Valve	V-12(C)	Yes	Yes	No	Yes	Yes	Open

Table 2.4.1-1

ICS Mechanical Equipment

Equipment Name (Description)	Equipment Identifier See Figure 2.4.1-1	ASME Code Section III	Seismic Cat. I	RCPB Component	Containment Isolation Valve.	Remotely Operated	Loss of Motive Power Position
Train D Isolation Condenser	---	---	---	---	---	---	---
IC (D) Heat Exchanger	---	Yes	Yes	No	No	N/A	N/A
Inline Vessel (D)	---	Yes	Yes	Yes	No	N/A	N/A
IC (D) Steam Supply Line	P-1(D)	Yes	Yes	Yes	No	N/A	N/A
IC (D) Steam Supply Line Isolation Valve	V-1(D)	Yes	Yes	Yes	Yes	Yes	As-Is
IC (D) Steam Supply Line Isolation Valve	V-2(D)	Yes	Yes	Yes	Yes	Yes	As-Is
IC (D) Condensate Return Line	P-2(D)	Yes	Yes	Yes	No	N/A	N/A
IC (D) Condensate Return Line Isolation Valve	V-3(D)	Yes	Yes	Yes	Yes	Yes	As-Is
IC (D) Condensate Return Line Isolation Valve	V-4(D)	Yes	Yes	Yes	Yes	Yes	As-Is
IC (D) Condensate Return Line Valve	V-5(D)	Yes	Yes	Yes	No	Yes	As-Is

Table 2.4.1-1

ICS Mechanical Equipment

Equipment Name (Description)	Equipment Identifier See Figure 2.4.1-1	ASME Code Section III	Seismic Cat. I	RCPB Component	Containment Isolation Valve.	Remotely Operated	Loss of Motive Power Position
IC (D) Condensate Return Line Bypass Valve	V-6(D)	Yes	Yes	Yes	No	Yes	Open
Upper IC (D) Header Vent Line	---	Yes	Yes	No	No	N/A	N/A
Upper IC (D) Header Vent Line Valve	V-7(D)	Yes	Yes	No	Yes	Yes	Closed
Upper IC (D) Header Vent Line Valve	V-8(D)	Yes	Yes	No	Yes	Yes	Closed
Lower IC (D) Header Vent Line	---	Yes	Yes	No	No	N/A	N/A
Lower IC (D) Header Vent Line Valve	V-9(D)	Yes	Yes	No	Yes	Yes	Closed
Lower IC (D) Header Vent Line Valve	V-10(D)	Yes	Yes	No	Yes	Yes	Closed
Lower IC (D) Header Vent Line Valve	V-11(D)	Yes	Yes	No	Yes	No	NA
Lower IC (D) Header Vent Line Valve	V-12(D)	Yes	Yes	No	Yes	Yes	Open

Note: N/A = Not Applicable

Table 2.4.1-2
ICS Electrical Equipment

Equipment Name (Description)	Equipment Identifier See Figure 2.4.1-1	Control Q-DCIS / DPS See Note	Seismic Category I	Safety-Related	Safety-Related Display	Deleted	Remotely Operated Valve	Containment Isolation Valve Actuator
Train A Isolation Condenser	---	---	---	---	---		---	---
IC (A) Steam Supply Line Isolation Valve	V-1(A)	Yes/No	Yes	Yes	Position		Yes	Yes
IC (A) Steam Supply Line Isolation Valve	V-2(A)	Yes/No	Yes	Yes	Position		Yes	Yes
IC (A) Condensate Return Line Isolation Valve	V-3(A)	Yes/No	Yes	Yes	Position		Yes	Yes
IC (A) Condensate Return Line Isolation Valve	V-4(A)	Yes/No	Yes	Yes	Position		Yes	Yes
IC (A) Condensate Return Line Valve	V-5(A)	***	Yes	Yes	Position		Yes	No
IC (A) Condensate Return Line Bypass Valve	V-6(A)	***	Yes	Yes	Position		Yes	No
Upper IC (A) Header Vent Line Valve	V-7(A)	Yes/No	Yes	Yes	Position		Yes	Yes

Table 2.4.1-2

ICS Electrical Equipment

Equipment Name (Description)	Equipment Identifier See Figure 2.4.1-1	Control Q-DCIS / DPS See Note	Seismic Category I	Safety-Related	Safety-Related Display	Deleted	Remotely Operated Valve	Containment Isolation Valve Actuator
Upper IC (A) Header Vent Line Valve	V-8(A)	Yes/No	Yes	Yes	Position		Yes	Yes
Lower IC (A) Header Vent Line Valve	V-9(A)	Yes/No	Yes	Yes	Position		Yes	Yes
Lower IC (A) Header Vent Line Valve	V-10(A)	Yes/No	Yes	Yes	Position		Yes	Yes
Lower IC (A) Header Vent Line Valve	V-11(A)	Yes/No	Yes	Yes	Position		No	NA
Lower IC (A) Header Vent Line Valve	V-12(A)	Yes/No	Yes	Yes	Position		Yes	Yes
Train B Isolation Condenser	---	---	---	---	---		---	---
IC (B) Steam Supply Line Isolation Valve	V-1(B)	Yes/No	Yes	Yes	Position		Yes	Yes
IC (B) Steam Supply Line Isolation Valve	V-2(B)	Yes/No	Yes	Yes	Position		Yes	Yes
IC (B) Condensate Return Line Isolation Valve	V-3(B)	Yes/No	Yes	Yes	Position		Yes	Yes

Table 2.4.1-2

ICS Electrical Equipment

Equipment Name (Description)	Equipment Identifier See Figure 2.4.1-1	Control Q-DCIS / DPS See Note	Seismic Category I	Safety-Related	Safety-Related Display	Deleted	Remotely Operated Valve	Containment Isolation Valve Actuator
IC (B) Condensate Return Line Isolation Valve	V-4(B)	Yes/No	Yes	Yes	Position		Yes	Yes
IC (B) Condensate Return Line Valve	V-5(B)	***	Yes	Yes	Position		Yes	No
IC (B) Condensate Return Line Bypass Valve	V-6(B)	***	Yes	Yes	Position		Yes	No
Upper IC (B) Header Vent Line Valve	V-7(B)	Yes/No	Yes	Yes	Position		Yes	Yes
Upper IC (B) Header Vent Line Valve	V-8(B)	Yes/No	Yes	Yes	Position		Yes	Yes
Lower IC (B) Header Vent Line Valve	V-9(B)	Yes/No	Yes	Yes	Position		Yes	Yes
Lower IC (B) Header Vent Line Valve	V-10(B)	Yes/No	Yes	Yes	Position		Yes	Yes
Lower IC (B) Header Vent Line Valve	V-11(B)	Yes/No	Yes	Yes	Position		No	NA

Table 2.4.1-2
ICS Electrical Equipment

Equipment Name (Description)	Equipment Identifier See Figure 2.4.1-1	Control Q-DCIS / DPS See Note	Seismic Category I	Safety-Related	Safety-Related Display	Deleted	Remotely Operated Valve	Containment Isolation Valve Actuator
Lower IC (B) Header Vent Line Valve	V-12(B)	Yes/No	Yes	Yes	Position		Yes	Yes
Train C Isolation Condenser	---	---	---	---	---		---	---
IC (C) Steam Supply Line Isolation Valve	V-1(C)	Yes/No	Yes	Yes	Position		Yes	Yes
IC (C) Steam Supply Line Isolation Valve	V-2(C)	Yes/No	Yes	Yes	Position		Yes	Yes
IC (C) Condensate Return Line Isolation Valve	V-3(C)	Yes/No	Yes	Yes	Position		Yes	Yes
IC (C) Condensate Return Line Isolation Valve	V-4(C)	Yes/No	Yes	Yes	Position		Yes	Yes
IC (C) Condensate Return Line Valve	V-5(C)	***	Yes	Yes	Position		Yes	No
IC (C) Condensate Return Line Bypass Valve	V-6(C)	***	Yes	Yes	Position		Yes	No

Table 2.4.1-2
ICS Electrical Equipment

Equipment Name (Description)	Equipment Identifier See Figure 2.4.1-1	Control Q-DCIS / DPS See Note	Seismic Category I	Safety-Related	Safety-Related Display	Deleted	Remotely Operated Valve	Containment Isolation Valve Actuator
Upper IC (C) Header Vent Line Valve	V-7(C)	Yes/No	Yes	Yes	Position		Yes	Yes
Upper IC (C) Header Vent Line Valve	V-8(C)	Yes/No	Yes	Yes	Position		Yes	Yes
Lower IC (C) Header Vent Line Valve	V-9(C)	Yes/No	Yes	Yes	Position		Yes	Yes
Lower IC (C) Header Vent Line Valve	V-10(C)	Yes/No	Yes	Yes	Position		Yes	Yes
Lower IC (C) Header Vent Line Valve	V-11(C)	Yes/No	Yes	Yes	Position		No	NA
Lower IC (C) Header Vent Line Valve	V-12(C)	Yes/No	Yes	Yes	Position		Yes	Yes
Train C Isolation Condenser	---	---	---	---	---		---	---
IC (D) Steam Supply Line Isolation Valve	V-1(D)	Yes/No	Yes	Yes	Position		Yes	Yes
IC (D) Steam Supply Line Isolation Valve	V-2(D)	Yes/No	Yes	Yes	Position		Yes	Yes

Table 2.4.1-2

ICS Electrical Equipment

Equipment Name (Description)	Equipment Identifier See Figure 2.4.1-1	Control Q-DCIS / DPS See Note	Seismic Category I	Safety-Related	Safety-Related Display	Deleted	Remotely Operated Valve	Containment Isolation Valve Actuator
IC (D) Condensate Return Line Isolation Valve	V-3(D)	Yes/No	Yes	Yes	Position		Yes	Yes
IC (D) Condensate Return Line Isolation Valve	V-4(D)	Yes/No	Yes	Yes	Position		Yes	Yes
IC (D) Condensate Return Line Valve	V-5(D)	***	Yes	Yes	Position		Yes	No
IC (D) Condensate Return Line Bypass Valve	V-6(D)	***	Yes	Yes	Position		Yes	No
Upper IC (D) Header Vent Line Valve	V-7(D)	Yes/No	Yes	Yes	Position		Yes	Yes
Upper IC (D) Header Vent Line Valve	V-8(D)	Yes/No	Yes	Yes	Position		Yes	Yes
Lower IC (D) Header Vent Line Valve	V-9(D)	Yes/No	Yes	Yes	Position		Yes	Yes
Lower IC (D) Header Vent Line Valve	V-10(D)	Yes/No	Yes	Yes	Position		Yes	Yes

Table 2.4.1-2

ICS Electrical Equipment

Equipment Name (Description)	Equipment Identifier See Figure 2.4.1-1	Control Q-DCIS / DPS See Note	Seismic Category I	Safety-Related	Safety-Related Display	Deleted	Remotely Operated Valve	Containment Isolation Valve Actuator
Lower IC (D) Header Vent Line Valve	V-11(D)	Yes/No	Yes	Yes	Position		No	NA
Lower IC (D) Header Vent Line Valve	V-12(D)	Yes/No	Yes	Yes	Position		Yes	Yes

Notes

*** Valve pair V-5 and V-6 must have a total of four control inputs to the pair. The minimum control inputs for this pair must include two different divisions to one of the valves and a third different division and DPS to the other valve. The design is such that any combination of two of four divisions or DPS can initiate ICS flow in all four ICS trains.

N/A = Not Applicable

Table 2.4.1-3

ITAAC For The Isolation Condenser System

Design Commitment	Inspections, Tests, Analyses	Acceptance Criteria
1. The functional arrangement of the IC System is as described in the Design Description of this Section 2.4.1, Tables 2.4.1-1 and 2, and Figure 2.4.1-1.	Inspection of the as-built system will be performed.	Report(s) document that the as-built IC System conforms with the functional arrangement described in the Design Description of this Section 2.4.1, Tables 2.4.1-1 and 2, and Figure 2.4.1-1. For components and piping identified in Table 2.4.1-1 as ASME Code Section III, this report is an ASME Code report.
2. ASME Code Section III a1. The components identified in Table 2.4.1-1 as ASME Code Section III are designed in accordance with ASME Code Section III requirements and seismic Category I requirements.	Inspection of ASME Code Design Reports (NCA-3550) and required documents will be conducted.	ASME Code Design Reports (NCA-3550) (certified, when required by ASME Code) conclude that the design of the IC System components identified in Table 2.4.1-1 as ASME Code Section III complies with the requirements of the ASME Code, Section III, including for those stresses and loads related to fatigue (including environmental effects), thermal expansion, seismic, and combined.

Table 2.4.1-3

ITAAC For The Isolation Condenser System

Design Commitment	Inspections, Tests, Analyses	Acceptance Criteria
a2. The components identified in Table 2.4.1-1 as ASME Code Section III shall be reconciled with the design requirements.	A reconciliation analysis of the components using as-design and as-built information and ASME Code certified Design Reports (NCA-3550) will be performed.	An ASME Code Design Report (certified, when required by ASME Code) exists and concludes that design reconciliation has been completed in accordance with the ASME Code for as-built reconciliation of the IC System components identified in Table 2.4.1-1 as ASME Code Section III. The report documents the results of the reconciliation analysis.
a3) The components identified in Table 2.4.1-1 as ASME Code Section III are fabricated, installed, and inspected in accordance with ASME Code Section III requirements.	Inspection of the components will be conducted.	ASME Code Data Reports (including N-5 Data reports, where applicable) (certified, when required by ASME Code) and inspection reports document that the components identified in Table 2.4.1-1 as ASME Code Section III are fabricated, installed, and inspected in accordance with ASME Code Section III requirements.

Table 2.4.1-3

ITAAC For The Isolation Condenser System

Design Commitment	Inspections, Tests, Analyses	Acceptance Criteria
b1. The piping identified in Table 2.4.1-1 as ASME Code Section III is designed in accordance with ASME Code Section III requirements and seismic Category I requirements.	Inspection of ASME Code certified Design Reports (NCA-3550) and required documents will be conducted. {{Design Acceptance Criteria}}	ASME Code certified Design Reports (NCA-3550) (certified, when required by ASME Code) conclude that the design of the IC System piping identified in Table 2.4.1-1 as ASME Code Section III complies with the requirements of the ASME Code, Section III, including for those stresses and loads related to fatigue (including environmental effects), thermal expansion, seismic, and combined. {{Design Acceptance Criteria}}
b2. The as-built piping identified in Table 2.4.1-1 as ASME Code Section III shall be reconciled with the with the piping design requirements.	A reconciliation analysis of the piping using the as-designed and as-built information and ASME Code certified Design Reports (NCA-3550) will be performed.	An ASME Code Design Report (certified, when required by ASME Code) exists and concludes that design reconciliation has been completed in accordance with the ASME Code for as-built reconciliation of the IC System piping identified in Table 2.4.1-1 as ASME Code Section III. The report documents the results of the reconciliation analysis.

Table 2.4.1-3

ITAAC For The Isolation Condenser System

Design Commitment	Inspections, Tests, Analyses	Acceptance Criteria
b3. The piping identified in Table 2.4.1-1 as ASME Code Section III is fabricated, installed, and inspected in accordance with ASME Code Section III requirements.	Inspections of the piping will be conducted.	ASME Code Data Reports (certified, when required by ASME Code) and inspection reports (including N-5 Data Reports where applicable) document that the piping identified in Table 2.4.1-1 as ASME Code Section III is fabricated, installed, and inspected in accordance with ASME Code Section III requirements.
3. Pressure Boundary Welds a. Pressure boundary welds in components identified in Table 2.4.1-1 as ASME Code Section III meet ASME Code Section III requirements.	Inspection of the as-built pressure boundary welds will be performed in accordance with the ASME Code Section III.	An ASME Code Report exists and concludes that the ASME Code Section III requirements are met for non-destructive examination of pressure boundary welds in the IC system.
b. Pressure boundary welds in piping identified in Table 2.4.1-1 as ASME Code Section III meet ASME Code Section III requirements.	Inspection of the as-built pressure boundary welds will be performed in accordance with the ASME Code Section III.	An ASME Code Report exists and concludes that the ASME Code Section III requirements are met for non-destructive examination of pressure boundary welds in the IC system.
4. Pressure Boundary Integrity a. The components identified in Table 2.4.1-1 as ASME Code Section III retain their pressure boundary integrity at their design pressure.	A hydrostatic test will be conducted on those code components of the IC system required to be hydrostatically tested by the ASME code.	An ASME Code Report exists and concludes that the results of the hydrostatic test of the ASME Code components of the IC system comply with the requirements of the ASME Code Section III.

Table 2.4.1-3

ITAAC For The Isolation Condenser System

Design Commitment	Inspections, Tests, Analyses	Acceptance Criteria
b. The piping identified in Table 2.4.1-1 as ASME Code Section III retains its pressure boundary integrity at its design pressure.	A hydrostatic test will be conducted on code piping of the IC system required to be hydrostatically tested by the ASME code.	An ASME Code Report(s) document that the results of the hydrostatic test of the ASME Code piping of the IC system comply with the requirements of the ASME Code Section III.
5. The seismic Category I components identified in Tables 2.4.1-1 and 2 can withstand seismic design basis loads without loss of safety function.	i) Inspection will be performed to verify that the seismic Category I equipment and valves identified in Tables 2.4.1-1 and 2 are located in a seismic Category I structure. ii) Type tests, analyses, or a combination of type tests and analyses of seismic Category I equipment will be performed. iii) Inspection will be performed for the existence of a report verifying that the as-installed equipment including anchorage is seismically bounded by the tested or analyzed conditions.	Report(s) document that: i) The seismic Category I equipment identified in Tables 2.4.1-1 and 2 is located in in a seismic Category I structure. ii) A report exists and concludes that the seismic Category I equipment can withstand seismic design basis loads without loss of safety function. iii) A report exists and concludes that the as-installed equipment including anchorage is seismically bounded by the tested or analyzed conditions.
b. Deleted		

Table 2.4.1-3

ITAAC For The Isolation Condenser System

Design Commitment	Inspections, Tests, Analyses	Acceptance Criteria
6a. Each of the IC System divisions (or safety-related loads/components) identified in Table 2.4.1-2 is powered from its respective safety-related division.	Testing will be performed on the IC System by providing a [simulated] test signal in only one safety-related division at a time.	Report(s) document that a [simulated] test signal exists in the safety-related division (or at the equipment identified in Table 2.4.1-2 powered from the safety-related division) under test in the IC System.
b. In the IC System, independence is provided between safety-related divisions, and between safety-related divisions and non-safety related equipment.	i) Tests will be performed on the IC System by providing a test signal in only one safety-related division at a time. ii) Inspection of the as-installed safety-related divisions in the IC System will be performed.	Report(s) document that: i) The test signal exists only in the safety-related Division under test in the System. ii) Inspection report(s) of the as-installed safety-related divisions in the IC System document that; • Physical separation or electrical isolation exists between these safety-related divisions in accordance with RG 1.75. • Physical separation or electrical isolation exists between safety-related divisions and non-safety related equipment in accordance with RG 1.75.
7. Deleted	Deleted	Deleted

Table 2.4.1-3

ITAAC For The Isolation Condenser System

Design Commitment	Inspections, Tests, Analyses	Acceptance Criteria
8. Control Room displays provided for the IC System are defined in Table 2.4.1-2	Inspections will be performed on the Control Room displays for the IC System.	Report(s) document that displays exist or can be retrieved in the Control Room as defined in Table 2.4.1-2
9. Re-positionable (NOT squib) valves designated in Table 2.4.1-1 as having an active safety-related function open, close, or both open and also close under differential pressure, fluid flow, and temperature conditions.	Tests of installed valves will be performed for opening, closing, or both opening and also closing under system preoperational differential pressure, fluid flow, and temperature conditions.	Report(s) document that, upon receipt of the actuating signal, each valve opens, closes, or both opens and also closes, depending upon the valve's safety function.
10. The pneumatically operated valve(s) designated in Table 2.4.1-1 fail in the mode listed if either electric power to the valve actuating solenoid is lost, or pneumatic pressure to the valve(s) is lost.	Tests will be conducted on the as-built valve(s).	Report(s) document that the pneumatically operated valve(s) identified in Table 2.4.1-1 fail in the listed mode when either electric power to the valve actuating solenoid is lost, or pneumatic pressure to the valve(s) is lost.
11. The equipment qualification of IC system components is addressed in Tier 1 Section 3.8.	See Tier 1 Section 3.8	See Tier 1 Section 3.8
12. The containment isolation portions of the IC System are addressed in Tier 1 Subsection 2.15.1.	See Tier 1 Subsection 2.15.1.	See Tier 1 Subsection 2.15.1.

Table 2.4.1-3

ITAAC For The Isolation Condenser System

Design Commitment	Inspections, Tests, Analyses	Acceptance Criteria
13. Each condensate return valve (V-5 and V-6) shown on Figure 2.4.1-1 will open to initiate the ICS.	Opening and/or closing tests of valves will be conducted under pre-operational differential pressure, fluid flow and temperature conditions.	Test reports document that each condensate return valve opening time is no less than 7.5 seconds and no greater than 31 seconds under pre-operational differential pressure, fluid flow, and temperature conditions.
14. The normally open ICS isolation valves (V-1, V-2, V-3 and V-4) in the steam supply and condensate return lines close automatically on receipt of high vent line radiation from the Process Radiation Monitoring System (PRMS).	An isolation valve closure test will be performed using simulated signals.	Test report(s) document that the ICS isolation valves close upon receipt of signals from the PRMS.
15. The normally open ICS isolation valves (V-1, V-2, V-3 and V-4) in the steam supply and condensate return lines close automatically on receipt of signals from the LD&IS.	An isolation valve closure test will be performed using simulated signals.	Test report(s) document that the ICS isolation valves close upon receipt of signals from the LD&IS.

Table 2.4.1-3

ITAAC For The Isolation Condenser System

Design Commitment	Inspections, Tests, Analyses	Acceptance Criteria
16. Each ICS train normally closed condensate return valve (V-5) opens upon receipt of the following automatic actuation signals: • RPV high pressure following a time delay • RPV water level below level 2 following a time delay • RPV water level below level 1 • Loss of power to 2 of 4 reactor feed pumps with the reactor mode switch in RUN • MSIVs in 2 of 4 steam lines less than fully open (≤92%) with the reactor mode switch in RUN.	Valve opening tests will be performed using simulated automatic actuation signals.	Test report(s) document that the condensate return valves open upon receipt of automatic actuation signals.

Table 2.4.1-3

ITAAC For The Isolation Condenser System

Design Commitment	Inspections, Tests, Analyses	Acceptance Criteria
17. Each ICS train normally closed condensate return bypass valve (V-6) opens upon receipt of the following automatic actuation signals: • RPV high pressure following a time delay • RPV water level below level 2 following a time delay • RPV water level below level 1 • Loss of power to 2 of 4 reactor feed pumps with the reactor mode switch in RUN • MSIVs in 2 of 4 steamlines less than fully open (≤92%) with the reactor mode switch in RUN.	Valve opening tests will be performed using simulated automatic actuation signals.	Test report(s) document that the condensate return valves open upon receipt of automatic actuation signals.
18. The two-series, solenoid-operated bottom vent line valves (V-9, and V-10) open on high RPV pressure after time delay following condensate return or condensate bypass valve opening signals.	A valve-opening test will be performed using simulated high reactor pressure after a time delay following condensate return or condensate bypass valve opening signals.	Test report(s) document that the two-series, solenoid-operated vent line valves open on a simulated high RPV pressure signal after a time delay following condensate return or condensate bypass valve opening signals.

Table 2.4.1-3

ITAAC For The Isolation Condenser System

Design Commitment	Inspections, Tests, Analyses	Acceptance Criteria
19. The three vent lines with two-series, solenoid-operated top and bottom vent line valves (V-7 & V-8; V-9 & V-10; V-11 & V-12) open on manual actuation only if condensate return or condensate bypass valve is not closed.	A test(s) will be performed that manually opens the vent valves during pre-operational testing following condensate return or condensate bypass valve opening signals.	Test report(s) document that the three vent lines with two-series, solenoid-operated vent line valves each, opens on a manual initiation following condensate return or condensate bypass valve opening signals.
20. The accumulator for the pneumatic isolation valves (V-1, V-2, V-3 and V-4) in the ICS steam supply and condensate return valves have the capacity to close the valves three times with the DW at the DW design pressure.	An analysis and/or test will be performed to demonstrate the capacity of the isolation valve accumulators.	Test report(s) document that isolation valve accumulators have the capacity to close the valves three times with the DW pressure at the design pressure.
21. Upon loss of pneumatic pressure to the condensate bypass valve (V-6), the valve strokes to the fully open position.	Tests will be performed to demonstrate that the condensate bypass valve will stroke to the full open position upon the loss of pneumatic pressure to the condensate bypass valve accumulator.	The condensate bypass valve fully opens when pneumatic pressure is removed from the condensate bypass valve.
22. Each ICS train has at least the minimum heat removal capacity assumed in analysis of Abnormal Events with reactor at or above normal operating pressure.	Using prototype test data and as-built IC unit information, an analysis will be performed to establish the heat removal capacity of the IC unit with IC pool at atmospheric saturated conditions.	Test and/or analysis report(s) document that the ICS train unit heat removal capacity is greater than or equal to 33.75 MWt with for the reactor at or above normal operating pressure.

Table 2.4.1-3

ITAAC For The Isolation Condenser System

Design Commitment	Inspections, Tests, Analyses	Acceptance Criteria
23. Each ICS train provides at least the minimum drainable liquid volume available for return to the RPV assumed in analysis of Abnormal Events.	An analysis will be performed for the as-built isolation condenser system.	An analysis exists and demonstrates that the as-built ICS train provides at least 13.88m^3 (490.1 ft^3) of the liquid volume available for return to the RPV.
24. The Dryer/Separator Pool and Reactor Well provide sufficient makeup water volume to the IC/PCC expansion pool to support operation of the ICS and PCCS for the first 72 hours.	a) A valve-opening test will be performed using simulated low-level water signal from the IC/PCC expansion pool. b) A physical measurement will be performed on the dimensions and water level in the IC/PCC pools, Dryer / Separator Pool, and Reactor Well to demonstrate that the required water volume is achieved.	a) Test report(s) document that the two-series, valves open on a simulated low-level water signal from the IC/PCC expansion pool. b). Measurements show that the combined water volume of the IC/PCC pools, Dryer / Separator Pool, and Reactor Well is no less than 6,290 m^3 (222,000 ft^3).
25. The IC/PCC pools are safety-related and Seismic Category 1.	Inspections of the IC/PCC pools confirm that they are safety-related and Seismic Category I.	A design report of the IC/PCC pools confirm that they are safety-related and Seismic Category I.
26. Each ICS flow path is constrained to a maximum flow area at transitions between Class 1 piping from containment to Class 2 piping outside containment in order to limit flow in the event of a break.	Inspection will be performed to confirm that the flow area at these transition locations is limited.	Inspection reports document that each steam supply branch line contains a flow limiter which is no greater than 76.2 mm (3”) in diameter, and that the condensate branch lines are no greater than 101.6 mm (4”) in diameter.

Table 2.4.1-3

ITAAC For The Isolation Condenser System

Design Commitment	Inspections, Tests, Analyses	Acceptance Criteria
27. ICS software is developed in accordance with the software development program described in Section 3.2.	See Section 3.2.	See Section 3.2.

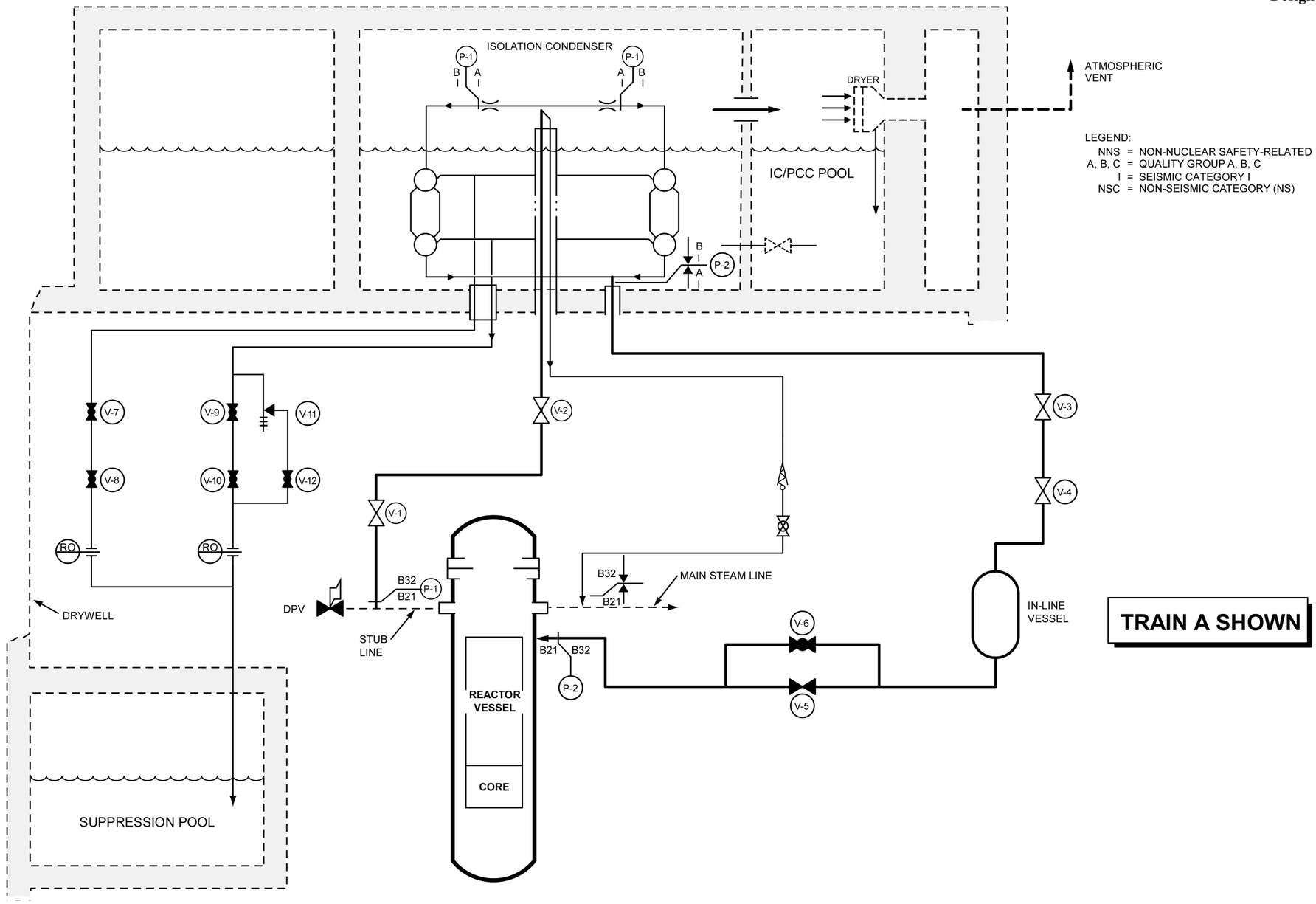

Figure 2.4.1-1. Isolation Condenser System Schematic

2.4.2 Emergency Core Cooling System - Gravity-Driven Cooling System

Design Description

Emergency core cooling is provided by the Gravity-Driven Cooling System (GDCS) located within containment in conjunction with the ADS in case of a LOCA.

(1) The functional arrangement of the GDCS is as listed in Table 2.4.2-1 and shown on Figure 2.4.2-1.

(2) ASME Code Section III

a1. The components identified in Table 2.4.2-1 as ASME Code Section III are designed in accordance with ASME Code Section III requirements and seismic Category I requirements.

a2. The components identified in Table 2.4.2-1 as ASME Code Section III shall be reconciled with the design requirements.

a3. The components identified in Table 2.4.2-1 as ASME Code Section III are fabricated, installed, and inspected in accordance with ASME Code Section III requirements.

b1. The piping identified in Table 2.4.2-1 as ASME Code Section III is designed in accordance with ASME Code Section III requirements and seismic Category I requirements.

b2. The as-built piping identified in Table 2.4.2-1 as ASME Code Section III shall be reconciled with the with the piping design requirements.

b3. The piping identified in Table 2.4.2-1 as ASME Code Section III is fabricated, installed, and inspected in accordance with ASME Code Section III requirements.

(3) Pressure Boundary Welds

a. Pressure boundary welds in components identified in Table 2.4.2-1 as ASME Code Section III meet ASME Code Section III requirements.

b. Pressure boundary welds in piping identified in Table 2.4.2-1 as ASME Code Section III meet ASME Code Section III requirements.

(4) Pressure Boundary Integrity

a. The components identified in Table 2.4.2-1 as ASME Code Section III retains their pressure boundary integrity at their design pressure.

b. The piping identified in Table 2.4.2-1 as ASME Code Section III retains its pressure boundary integrity at design pressure.

(5) The seismic Category I components identified in Table 2.4.2-1 can withstand seismic design basis loads without loss of safety function.

(6) GDCS system minimum inventory of alarms, displays, controls, and status indications in the main control room are addressed in Section 3.3.

(7) The equipment qualification of GDCS components is addressed in Tier 1 Section 3.8.

(8) The GDCS injections lines provide sufficient flow to maintain water coverage above TAF for 72 hours following a design basis LOCA.

a. The GDCS equalizing lines provide sufficient flow to maintain water coverage above TAF for 72 hours following a design basis LOCA.

(9) The GDCS squib valve used in the injection and equalization open as designed.

(10) a. Check valves shown on Figure 2.4.2-1 open, close, or both open and also close under system pressure, fluid flow, and temperature conditions.

b. The GDCS injection line check valves meet the criterion for maximum fully open flow coefficient in the reverse flow direction.

(11) Control Room indications and controls are provided for the GDCS.

(12) GDCS squib valves maintain RPV backflow leak tightness and maintain reactor coolant pressure boundary integrity during normal plant operation.

(13) Each GDCS injection line includes a nozzle flow limiter to limit break size.

(14) Each GDCS equalizing line includes a nozzle flow limiter to limit break size.

(15) Each of the GDCS divisions is powered from their respective safety-related power divisions.

(16) Deleted

(17) The GDCS pools A, B/C, and D are sized to hold a minimum drainable water volume.

(18) The GDCS pools A, B/C, and D are of sized for holding a specified minimum water level.

(19) The minimum elevation change between minimum water level of GDCS pools and the centerline of GDCS injection line nozzles is sufficient to provide gravity-driven flow.

(20) The minimum drainable volume from the suppression pool to the RPV is sufficient to meet long-term post-LOCA core cooling requirements.

(21) The long-term GDCS minimum equalizing driving head is based on RPV Level 0.5.

(22) The GDCS Deluge squib valves open as designed.

(23) GDCS software is developed in accordance with the software development program described in Section 3.2.

(24) The GDCS injection piping is installed to allow venting of non-condensable gases to GDCS pools and to RPV, to prevent collection in the GDCS injection pipes.

Refer to Subsection 2.2.15 for "Instrumentation and Controls Compliance with IEEE Standard 603."

Inspections, Tests, Analyses and Acceptance Criteria

Table 2.4.2-3 provides a definition of the inspections, test and/or analyses, together with associated acceptance criteria for the Gravity-Driven Cooling System.

Table 2.4.2-1

GDCS Mechanical Equipment

Equipment Name (Description)	Equipment Identifier See Figure 2.4.2-1	ASME Code Section III	Seismic Cat. I	RCPB Component	Containment Isolation Valve	Remotely Operated	Loss of Motive Power Position	MCR Alarms
GDCS Pool Supply Line to V-2	P-1(A)	Yes	Yes	No	-	-	-	-
GDCS Pool Injection Line Check Valve	V-1(A)	Yes	Yes	No	No	No	-	-
GDCS Pool Injection Line Squib Valve	V-2(A)	Yes	Yes	Yes	No	Yes	As-Is	Yes
GDCS Pool Injection Line Squib Valve	V-3(A)	Yes	Yes	Yes	No	Yes	As-Is	Yes
GDCS Pool Injection Line Check Valve	V-4(A)	Yes	Yes	No	No	No	-	-
GDCS Injection Line from V-2 (V-3) to RPV inlet nozzle	P-2(A)	Yes	Yes	Yes	-	-	-	-
GDCS Suppression Pool Supply line to V-5	P-5(A)	Yes	Yes	No	-	-	-	-

Table 2.4.2-1

GDCS Mechanical Equipment

Equipment Name (Description)	Equipment Identifier See Figure 2.4.2-1	ASME Code Section III	Seismic Cat. I	RCPB Component	Containment Isolation Valve	Remotely Operated	Loss of Motive Power Position	MCR Alarms
GDCS Suppression Pool Injection Line Check Valve	V-6(A)	Yes	Yes	No	No	No	-	-
GDCS Suppression Pool Injection Line Squib Valve	V-5(A)	Yes	Yes	Yes	No	Yes	As-Is	Yes
GDCS Suppression Pool Equalizing Line from V-5 to RPV inlet nozzle	P-3(A)	Yes	Yes	Yes	-	-	-	-
GDCS Deluge Line	P-4(A)	Yes	Yes	No	-	-	-	-
GDCS Deluge Line Squib Valve	V-7(A)	Yes	Yes	No	No	Yes	As-Is	Yes
GDCS Deluge Line Squib Valve	V-8(A)	Yes	Yes	No	No	Yes	As-Is	Yes
GDCS Deluge Line Squib Valve	V-9(A)	Yes	Yes	No	No	Yes	As-Is	Yes
GDCS Pool Supply Line to V-2	P-1(B)	Yes	Yes	No	-	-	-	-

Table 2.4.2-1

GDCS Mechanical Equipment

Equipment Name (Description)	Equipment Identifier See Figure 2.4.2-1	ASME Code Section III	Seismic Cat. I	RCPB Component	Containment Isolation Valve	Remotely Operated	Loss of Motive Power Position	MCR Alarms
GDCS Pool Injection Line Check Valve	V-1(B)	Yes	Yes	No	No	No	-	-
GDCS Pool Injection Line Squib Valve	V-2(B)	Yes	Yes	Yes	No	Yes	As-Is	Yes
GDCS Pool Injection Line Squib Valve	V-3(B)	Yes	Yes	Yes	No	Yes	As-Is	Yes
GDCS Pool Injection Line Check Valve	V-4(B)	Yes	Yes	No	No	No	-	-
GDCS Injection Line from V-2 (V-3) to RPV inlet nozzle	P-2(B)	Yes	Yes	Yes	-	-	-	-
GDCS Suppression Pool Supply line to V-5	P-5(B)	Yes	Yes	No	-	-	-	-
GDCS Suppression Pool Injection Line Check Valve	V-6(B)	Yes	Yes	No	No	No	-	-

Table 2.4.2-1

GDCS Mechanical Equipment

Equipment Name (Description)	Equipment Identifier See Figure 2.4.2-1	ASME Code Section III	Seismic Cat. I	RCPB Component	Containment Isolation Valve	Remotely Operated	Loss of Motive Power Position	MCR Alarms
GDCS Suppression Pool Injection Line Squib Valve	V-5(B)	Yes	Yes	Yes	No	Yes	As-Is	Yes
GDCS Suppression Pool Equalizing Line from V-5 to RPV inlet nozzle	P-3(B)	Yes	Yes	Yes	-	-	-	-
GDCS Deluge Line	P-4(B)	Yes	Yes	No	-	-	-	-
GDCS Deluge Line Squib Valve	V-7(B)	Yes	Yes	No	No	Yes	As-Is	Yes
GDCS Deluge Line Squib Valve	V-8(B)	Yes	Yes	No	No	Yes	As-Is	Yes
GDCS Deluge Line Squib Valve	V-9(B)	Yes	Yes	No	No	Yes	As-Is	Yes
GDCS Pool Supply Line to V-2	P-1(C)	Yes	Yes	No	-	-	-	-
GDCS Pool Injection Line Check Valve	V-1(C)	Yes	Yes	No	No	No	-	-

Table 2.4.2-1

GDCS Mechanical Equipment

Equipment Name (Description)	Equipment Identifier See Figure 2.4.2-1	ASME Code Section III	Seismic Cat. I	RCPB Component	Containment Isolation Valve	Remotely Operated	Loss of Motive Power Position	MCR Alarms
GDCS Pool Injection Line Squib Valve	V-2(C)	Yes	Yes	Yes	No	Yes	As-Is	Yes
GDCS Pool Injection Line Squib Valve	V-3(C)	Yes	Yes	Yes	No	Yes	As-Is	Yes
GDCS Pool Injection Line Check Valve	V-4(C)	Yes	Yes	No	No	No	-	-
GDCS Injection Line from V-2 (V-3) to RPV inlet nozzle	P-2(C)	Yes	Yes	Yes	-	-	-	-
GDCS Suppression Pool Supply line to V-5	P-5(C)	Yes	Yes	No	-	-	-	-
GDCS Suppression Pool Injection Line Check Valve	V-6(C)	Yes	Yes	No	No	No	-	-
GDCS Suppression Pool Injection Line Squib Valve	V-5(C)	Yes	Yes	Yes	No	Yes	As-Is	Yes

Table 2.4.2-1

GDCS Mechanical Equipment

Equipment Name (Description)	Equipment Identifier See Figure 2.4.2-1	ASME Code Section III	Seismic Cat. I	RCPB Component	Containment Isolation Valve	Remotely Operated	Loss of Motive Power Position	MCR Alarms
GDCS Suppression Pool Equalizing Line from V-5 to RPV inlet nozzle	P-3(C)	Yes	Yes	Yes	-	-	-	-
GDCS Deluge Line	P-4(C)	Yes	Yes	No	-	-	-	-
GDCS Deluge Line Squib Valve	V-7(C)	Yes	Yes	No	No	Yes	As-Is	Yes
GDCS Deluge Line Squib Valve	V-8(C)	Yes	Yes	No	No	Yes	As-Is	Yes
GDCS Deluge Line Squib Valve	V-9(C)	Yes	Yes	No	No	Yes	As-Is	Yes
GDCS Pool Supply Line to V-2	P-1(D)	Yes	Yes	No	-	-	-	-
GDCS Pool Injection Line Check Valve	V-1(D)	Yes	Yes	No	No	No	-	-
GDCS Pool Injection Line Squib Valve	V-2(D)	Yes	Yes	Yes	No	Yes	As-Is	Yes

Table 2.4.2-1

GDCS Mechanical Equipment

Equipment Name (Description)	Equipment Identifier See Figure 2.4.2-1	ASME Code Section III	Seismic Cat. I	RCPB Component	Containment Isolation Valve	Remotely Operated	Loss of Motive Power Position	MCR Alarms
GDCS Pool Injection Line Squib Valve	V-3(D)	Yes	Yes	Yes	No	Yes	As-Is	Yes
GDCS Pool Injection Line Check Valve	V-4(D)	Yes	Yes	No	No	No	-	-
GDCS Injection Line from V-2 (V-3) to RPV inlet nozzle	P-2(D)	Yes	Yes	Yes	-	-	-	-
Supppression Pool Equalization Line Intake Screen	N/A	Yes	Yes	No	No	No	-	-
GDCS Suppression Pool Supply line to V-5	P-5(D)	Yes	Yes	No	-	-	-	-
GDCS Suppression Pool Injection Line Check Valve	V-6(D)	Yes	Yes	No	No	No	-	-
GDCS Suppression Pool Injection Line Squib Valve	V-5(D)	Yes	Yes	Yes	No	Yes	As-Is	Yes

Table 2.4.2-1

GDCS Mechanical Equipment

Equipment Name (Description)	Equipment Identifier See Figure 2.4.2-1	ASME Code Section III	Seismic Cat. I	RCPB Component	Containment Isolation Valve	Remotely Operated	Loss of Motive Power Position	MCR Alarms
GDCS Suppression Pool Equalizing Line from V-5 to RPV inlet nozzle	P-3(D)	Yes	Yes	No	-	-	-	-
GDCS Deluge Line	P-4(D)	Yes	Yes	No	-	-	-	-
GDCS Deluge Line Squib Valve	V-7(D)	Yes	Yes	No	No	Yes	As-Is	Yes
GDCS Deluge Line Squib Valve	V-8(D)	Yes	Yes	No	No	Yes	As-Is	Yes
GDCS Deluge Line Squib Valve	V-9(D)	Yes	Yes	No	No	Yes	As-Is	Yes
GDCS Pool Perforated Plate	N/A	Yes	Yes	No	No	No	-	-
GDCS Pool Stainless Steel Liner	N/A	Yes	Yes	No	No	No	-	-
GDCS Injection Line from pool to squib valve	P-1							
GDCS Injection Line Squib Valve	V-1 (A)							

Table 2.4.2-1

GDCS Mechanical Equipment

Equipment Name (Description)	Equipment Identifier See Figure 2.4.2-1	ASME Code Section III	Seismic Cat. I	RCPB Component	Containment Isolation Valve	Remotely Operated	Loss of Motive Power Position	MCR Alarms
GDCS Injection Line Check Valve	V-2 (A)							

Table 2.4.2-2

Electrical Equipment

Equipment Name (Description)	Equipment Identifier See Figure 2.4.2-1	Control Q-DCIS/ DPS	Seismic Category I	Safety-Related	Safety-Related Display	Remotely Operated	Containment Isolation Valve Actuator
GDCS Injection Line Check Valve	V-1(A)	-	Yes	Yes	Yes	No	No
GDCS Injection Line Squib Valve	V-2(A)	Yes / Yes	Yes	Yes	Yes	Yes	No
GDCS Injection Line Squib Valve	V-3(A)	Yes / Yes	Yes	Yes	Yes	Yes	No
GDCS Injection Line Check Valve	V-4(A)	-	Yes	Yes	Yes	No	No
GDCS Suppression Pool Injection Line Squib Valve	V-5(A)	Yes / Yes	Yes	Yes	Yes	Yes	No
GDCS Suppression Pool Injection Line Check Valve	V-6(A)	-	Yes	Yes	Yes	No	No
GDCS Deluge Line Squib Valve	V-7(A)	-	Yes	No	Yes	Yes	No
GDCS Deluge Line Squib Valve	V-8(A)	-	Yes	No	Yes	Yes	No
GDCS Deluge Line Squib Valve	V-9(A)	-	Yes	No	Yes	Yes	No

Table 2.4.2-2

Electrical Equipment

Equipment Name (Description)	Equipment Identifier See Figure 2.4.2-1	Control Q-DCIS/ DPS	Seismic Category I	Safety-Related	Safety-Related Display	Remotely Operated	Containment Isolation Valve Actuator
GDCS Injection Line Check Valve	V-1(B)	-	Yes	Yes	Yes	No	No
GDCS Injection Line Squib Valve	V-2(B)	Yes / Yes	Yes	Yes	Yes	Yes	No
GDCS Injection Line Squib Valve	V-3(B)	Yes / Yes	Yes	Yes	Yes	Yes	No
GDCS Injection Line Check Valve	V-4(B)	-	Yes	Yes	Yes	No	No
GDCS Suppression Pool Injection Line Squib Valve	V-5(B)	Yes / Yes	Yes	Yes	Yes	Yes	No
GDCS Suppression Pool Injection Line Check Valve	V-6(B)	-	Yes	Yes	Yes	No	No
GDCS Deluge Line Squib Valve	V-7(B)	-	Yes	No	Yes	Yes	No
GDCS Deluge Line Squib Valve	V-8(B)	-	Yes	No	Yes	Yes	No
GDCS Deluge Line Squib Valve	V-9(B)	-	Yes	No	Yes	Yes	No
GDCS Injection Line Check Valve	V-1(C)	-	Yes	Yes	Yes	No	No

Table 2.4.2-2

Electrical Equipment

Equipment Name (Description)	Equipment Identifier See Figure 2.4.2-1	Control Q-DCIS/ DPS	Seismic Category I	Safety-Related	Safety-Related Display	Remotely Operated	Containment Isolation Valve Actuator
GDCS Injection Line Squib Valve	V-2(C)	Yes / Yes	Yes	Yes	Yes	Yes	No
GDCS Injection Line Squib Valve	V-3(C)	Yes / Yes	Yes	Yes	Yes	Yes	No
GDCS Injection Line Check Valve	V-4(C)	-	Yes	Yes	Yes	No	No
GDCS Suppression Pool Injection Line Squib Valve	V-5(C)	Yes / Yes	Yes	Yes	Yes	Yes	No
GDCS Suppression Pool Injection Line Check Valve	V-6(C)	-	Yes	Yes	Yes	No	No
GDCS Deluge Line Squib Valve	V-7(C)	-	Yes	No	Yes	Yes	No
GDCS Deluge Line Squib Valve	V-8(C)	-	Yes	No	Yes	Yes	No
GDCS Deluge Line Squib Valve	V-9(C)	-	Yes	No	Yes	Yes	No
GDCS Injection Line Check Valve	V-1(D)	-	Yes	Yes	Yes	No	No
GDCS Injection Line Squib Valve	V-2(D)	Yes / Yes	Yes	Yes	Yes	Yes	No

Table 2.4.2-2

Electrical Equipment

Equipment Name (Description)	Equipment Identifier See Figure 2.4.2-1	Control Q-DCIS/ DPS	Seismic Category I	Safety-Related	Safety-Related Display	Remotely Operated	Containment Isolation Valve Actuator
GDCS Injection Line Squib Valve	V-3(D)	Yes / Yes	Yes	Yes	Yes	Yes	No
GDCS Injection Line Check Valve	V-4(D)	-	Yes	Yes	Yes	No	No
GDCS Suppression Pool Injection Line Squib Valve	V-5(D)	Yes / Yes	Yes	Yes	Yes	Yes	No
GDCS Suppression Pool Injection Line Check Valve	V-6(D)	-	Yes	Yes	Yes	No	No
GDCS Deluge Line Squib Valve	V-7(D)	-	Yes	No	Yes	Yes	No
GDCS Deluge Line Squib Valve	V-8(D)	-	Yes	No	Yes	Yes	No
GDCS Deluge Line Squib Valve	V-9(D)	-	Yes	No	Yes	Yes	No
Programmable logic controller Channel A Train 1	-	-	No (II)	No	No	-	-
Programmable logic controller Channel B Train 1	-	-	No (II)	No	No	-	-
Programmable logic controller Channel A Train 2	-	-	No (II)	No	No	-	-

Table 2.4.2-2

Electrical Equipment

Equipment Name (Description)	Equipment Identifier See Figure 2.4.2-1	Control Q-DCIS/ DPS	Seismic Category I	Safety-Related	Safety-Related Display	Remotely Operated	Containment Isolation Valve Actuator
Programmable logic controller Channel B Train 2	-	-	No (II)	No	No	-	-
Deluge System PLC DC power supply battery and charger Channel A Train1	-	-	No (II)	No	No	-	-
Deluge System PLC DC power supply battery and charger Channel B Train 1	-	-	No (II)	No	No	-	-
Deluge System squib valve initiator DC power supply battery and charger Train 1	-	-	No (II)	No	No	-	-
Deluge System PLC DC power supply battery and charger Channel A Train 2	-	-	No (II)	No	No	-	-
Deluge System PLC DC power supply battery and charger Channel B Train 2	-	-	No (II)	No	No	-	-
Deluge System squib valve initiator DC power supply battery and charger Train 2	-	-	No (II)	No	No	-	-

Table 2.4.2-2

Electrical Equipment

Equipment Name (Description)	Equipment Identifier See Figure 2.4.2-1	Control Q-DCIS/ DPS	Seismic Category I	Safety-Related	Safety-Related Display	Remotely Operated	Containment Isolation Valve Actuator
GDCS lower drywell temperature switch high Switch A Train 1	-	-	Yes	Yes	Yes	-	-
GDCS lower drywell temperature switch high Switch B Train 1	-	-	Yes	Yes	Yes	-	-
GDCS BiMAC thermocouples Channel A Train 1	-	-	No (II))	No	No	-	-
GDCS BiMAC thermocouples Channel B Train 1	-	-	No (II)	No	No	-	-
GDCS lower drywell temperature switch high Switch A Train 2	-	-	Yes	Yes	Yes	-	-
GDCS lower drywell temperature switch high Switch B Train 2	-	-	Yes	Yes	Yes	-	-
GDCS BiMAC thermocouples Channel A Train 2	-	-	No (II)	No	No	-	-

Table 2.4.2-2

Electrical Equipment

Equipment Name (Description)	Equipment Identifier See Figure 2.4.2-1	Control Q-DCIS/ DPS	Seismic Category I	Safety-Related	Safety-Related Display	Remotely Operated	Containment Isolation Valve Actuator
GDCS BiMAC thermocouples Channel B Train 2	-	-	No (II)	No	No	-	-

Table 2.4.2-3

ITAAC For The Gravity-Driven Cooling System

Design Commitment	Inspections, Tests, Analyses	Acceptance Criteria
1. The functional arrangement of the GDCS is as listed in Table 2.4.2-1 and shown on Figure 2.4.2-1.	Inspections of the as-built system will be conducted.	The as-built GDCS conforms to the functional arrangement as listed in Table 2.4.2-1 and shown in Figure 2.4.2-1. For components and piping identified in Table 2.4.2-1 as ASME Code Section III, this report is an ASME Code report.
2. ASME Code Section III		
a1. The components identified in Table 2.4.2-1 as ASME Code Section III are designed in accordance with ASME Code Section III requirements and seismic Category I requirements.	Inspection of ASME Code Design Reports (NCA-3550) and required documents will be conducted.	ASME Code Design Reports (NCA-3550) (certified, when required by ASME Code) conclude that the design of the GDCScomponents identified in Table 2.4.2-1 as ASME Code Section III complies with the requirements of the ASME Code, Section III, including for those stresses and loads related to fatigue (including environmental effects), thermal expansion, seismic, and combined.
a2. The components identified in Table 2.4.2-1 as ASME Code Section III shall be reconciled with the design requirements.	A reconciliation analysis of the components using as-design and as-built information and ASME Code certified Design Reports (NCA-3550) will be performed.	An ASME Code Design Report (certified, when required by ASME Code) exists and concludes that design reconciliation has been completed in accordance with the ASME Code for as-built reconciliation of the GDCS components identified in Table 2.4.2-1 as ASME Code Section III. The report documents

Table 2.4.2-3

ITAAC For The Gravity-Driven Cooling System

Design Commitment	Inspections, Tests, Analyses	Acceptance Criteria
		the results of the reconciliation analysis.
a3. The components identified in Table 2.4.2-1 as ASME Code Section III are fabricated, installed, and inspected in accordance with ASME Code Section III requirements.	Inspection of the components will be conducted.	ASME Code Data Reports (including N-5 Data reports, where applicable) (certified, when required by ASME Code) and inspection reports document that the components identified in Table 2.4.2-1 as ASME Code Section III are fabricated, installed, and inspected in accordance with ASME Code Section III requirements.
b1. The piping identified in Table 2.4.2-1 as ASME Code Section III is designed in accordance with ASME Code Section III requirements and seismic Category I requirements.	Inspection of ASME Code certified Design Reports (NCA-3550) and required documents will be conducted. {{Design Acceptance Criteria}}	ASME Code certified Design Reports (NCA-3550) (certified, when required by ASME Code) conclude that the design of the GDCSpiping identified in Table 2.4.2-1 as ASME Code Section III complies with the requirements of the ASME Code, Section III, including for those stresses and loads related to fatigue (including environmental effects), thermal expansion, seismic, and combined. {{Design Acceptance Criteria}}

Table 2.4.2-3

ITAAC For The Gravity-Driven Cooling System

Design Commitment	Inspections, Tests, Analyses	Acceptance Criteria
b2. The as-built piping identified in Table 2.4.2-1 as ASME Code Section III shall be reconciled with the with the piping design requirements.	A reconciliation analysis of the piping using the as-designed and as-built information and ASME Code certified Design Reports (NCA-3550) will be performed.	An ASME Code Design Report (certified, when required by ASME Code) exists and concludes that design reconciliation has been completed in accordance with the ASME Code for as-built reconciliation of the GDCSpiping identified in Table 2.4.2-1 as ASME Code Section III. The report documents the results of the reconciliation analysis.
b3. The piping identified in Table 2.4.2-1 as ASME Code Section III is fabricated, installed, and inspected in accordance with ASME Code Section III requirements.	Inspections of the piping will be conducted.	ASME Code Data Reports (certified, when required by ASME Code) and inspection reports (including N-5 Data Reports where applicable) document that the piping identified in Table 2.4.2-1 as ASME Code Section III is fabricated, installed, and inspected in accordance with ASME Code Section III requirements.
3. Pressure Boundary Welds a. Pressure boundary welds in components identified in Table 2.4.2-1 as ASME Code Section III meet ASME Code Section III requirements.	Inspection of the as-built pressure boundary welds will be performed in accordance with the ASME Code Section III.	An ASME Code report exists and concludes that the ASME Code Section III requirements are met for non-destructive examination of pressure boundary welds in the GDCS.

Table 2.4.2-3

ITAAC For The Gravity-Driven Cooling System

Design Commitment	Inspections, Tests, Analyses	Acceptance Criteria
b. Pressure boundary welds in piping identified in Table 2.4.2-1 as ASME Code Section III meet ASME Code Section III requirements.	Inspection of the as-built pressure boundary welds will be performed in accordance with the ASME Code Section III.	An ASME Code report exists and concludes that the ASME Code Section III requirements are met for non-destructive examination of pressure boundary welds in the GDCS.
4. Pressure Boundary Integrity		
a. The components identified in Table 2.4.2-1 as ASME Code Section III retain their pressure boundary integrity at their design pressure.	A hydrostatic test will be conducted on those code components of the GDCS required to be hydrostatically tested by the ASME code.	An ASME Code Report exists and concludes that the results of the hydrostatic test of the ASME Code components of the GDCS comply with the requirements of the ASME CodeSection III.
b. The piping identified in Table 2.4.2-1 as ASME Code Section III retains its pressure boundary integrity at design pressure.	A hydrostatic test will be conducted on the code piping of the GDCS required to be hydrostatically tested by the ASME code.	An ASME Code Report exists and concludes that the results of the hydrostatic test of the ASME Code piping of the GDCS comply with the requirements in the ASME Code Section III.

Table 2.4.2-3

ITAAC For The Gravity-Driven Cooling System

Design Commitment	Inspections, Tests, Analyses	Acceptance Criteria
5. The seismic Category I components identified in Table 2.4.2-1 can withstand seismic design basis loads without loss of safety function.	i) Inspection will be performed to verify that the seismic Category I equipment and valves identified in Table 2.4.2-1 are located in a seismic Category I structure. ii) Type tests, analyses, or a combination of type tests and analyses of seismic Category I equipment will be performed. iii) Inspection and analyses will be performed to verify that the as-built components including anchorage are bounded by the tested or analyzed conditions.	i) Report(s) document that the seismic Category I equipment identified in Table 2.4.2-1 is located in a seismic Category I structure. ii) A report exists and concludes that the components identified in Table 2.4.2-1 can withstand seismic design basis loads without loss of safety function. iii) A report exists and concludes that the as-built equipment including anchorage have been tested or analyzed under the conditions necessary to ensure compliance with Seismic Category I design requirements.
6. GDCS system minimum inventory of alarms, displays, controls, and status indications in the main control room are addressed in Section 3.3.	See Section 3.3.	See Section 3.3.

Table 2.4.2-3

ITAAC For The Gravity-Driven Cooling System

Design Commitment	Inspections, Tests, Analyses	Acceptance Criteria
7. The equipment qualification of GDCS components is addressed in Tier 1 Section 3.8.	See Tier 1 Section 3.8.	See Tier 1 Section 3.8.
8a. The GDCS injections lines provide sufficient flow to maintain water coverage above TAF for 72 hours following a design basis LOCA.	For each loop of the GDCS, an open reactor vessel test will be performed utilizing two test valves in place of the parallel squib valves in the GDCS injection line and connected to the GDCS actuation logic. Flow measurements will be taken on flow into the RPV. An analysis of the test configuration will be performed.	A report exists and demonstrates that, based on analysis and test data,that the observed flow rate, in conjunction with vessel depressurization and other modes of GDCS operation, maintains water coverage above TAF for 72 hours following the design basis LOCA.
b. The GDCS equalizing lines provide sufficient flow to maintain water coverage above TAF for 72 hours following a design basis LOCA.	For each loop of the GDCS, open reactor vessel testing will be performed utilizing one test valve in place of the squib valve in the GDCS equalizing line and connected to the GDCS actuation logic. Flow measurements will be taken on flow into the RPV. An analysis of the test configuration will be performed.	A report exists and demonstrates, based on analysis and test data, that the observed flow rate, in conjunction with vessel depressurization and other modes of GDCS operation, will maintain water coverage above TAF for 72 hours following the design basis LOCA.
9. The GDCS squib valve used in the injection and equalization open as designed.	A vendor type test will be performed on a squib valve to open as designed.	Records of vendor type test concludes GDCS squib valves used in the injection and equalization open as designed.

Table 2.4.2-3

ITAAC For The Gravity-Driven Cooling System

Design Commitment	Inspections, Tests, Analyses	Acceptance Criteria
10a. Check valves designated on Figure 2.4.2-1 open, close, or both open and also close under system pressure, fluid flow, and temperature conditions.	Type tests of valves for opening, closing, or both opening and also closing, will be conducted.	Based on the direction of the differential pressure across the valve, each check valve opens, closes, or both opens and closes, depending upon the valve's safety functions.
b. The GDCS injection line check valves meet the criterion for maximum fully open flow coefficient in the reverse flow direction.	Type tests of the GDCS check valves to determine the fully open flow coefficient in the reverse flow direction will be conducted.	A report exists that documents that the fully open flow coefficient for the GDCS injection line check valves in the reverse flow direction is less than the value assumed in the LOCA analysis.
11. Control Room indications and controls are provided for the GDCS.	Inspections will be performed on the Control Room indications and controls for the GDCS.	Indications and controls exist or can be retrieved in the control room as defined in Subsection 2.4.2.
12. GDCS squib valves maintain RPV backflow leak tightness and maintain reactor coolant pressure boundary integrity during normal plant operation.	A test will be performed to demonstrate the squib valves are leak tight during normal plant conditions.	Testing concludes GDCS squib valves have zero leakage at normal plant operating pressure
13. Each GDCS injection line includes a nozzle flow limiter to limit break size	Inspections of the as-built GDCS injection flow limiters will be taken	A report exists that confirms each GDCS injection nozzle flow limiter is less than or equal to 4.562E-3 m^2 (0.0491 ft^2) and a nominal reactor-side outlet length to diameter value of 4.41.

Table 2.4.2-3

ITAAC For The Gravity-Driven Cooling System

Design Commitment	Inspections, Tests, Analyses	Acceptance Criteria
14. Each GDCS equalizing line includes a nozzle flow limiter to limit break size.	Inspections of the as-built GDCS equalizing flow limiters will be taken	A report exists that confirms each GDCS equalizing line nozzle flow limiter is less than or equal to 2.027E-3 m^2 (0.0218 ft^2) and a nominal reactor-side outlet length to diameter value of 6.59.
15. Each of the GDCS divisions is powered from their respective safety-related power divisions.	Tests will be performed on the GDCS by providing a test signal in only one safety-related power division at a time.	Testing confirms the signal exists only in the safety-related power division under test in the GDCS.
16. Delete	Delete	Delete
17. The GDCS pools A, B/C, and D are sized to hold a minimum drainable water volume.	An analysis of combined minimum drainable volume for GDCS pools A, B/C, and D will be performed.	Analysis confirms the combined minimum drainable water volume for GDCS pools A, B/C, and D is 1636 m^3 (57775 ft^3).
18. The GDCS pools A, B/C, and D are of sized for holding a specified minimum water level.	An analysis of minimum water level in GDCS pools A, B/C, and D will be performed.	Analysis confirms the minimum water level in GDCS pools A, B/C, and D is 6.5 m (21.33 ft).
19. The minimum elevation change between minimum water level of GDCS pools and the centerline of GDCS injection line nozzles is sufficient to provide gravity-driven flow.	An analysis of minimum elevation change between minimum water level of GDCS pools and the centerline of GDCS injection line nozzles will be performed.	Analysis confirms the minimum elevation change between minimum water level of GDCS pools and the centerline of GDCS injection line nozzles is 13.5 m (44.3 ft).

Table 2.4.2-3

ITAAC For The Gravity-Driven Cooling System

Design Commitment	Inspections, Tests, Analyses	Acceptance Criteria
20. The minimum drainable volume from the suppression pool to the RPV is sufficient to meet long-term post-LOCA core cooling requirements.	An analysis of minimum drainable volume from the suppression pool to the RPV will be performed.	Analysis confirms the minimum drainable volume from the suppression pool to the RPV is 799 m^3 (28,216 ft^3).
21. The long-term GDCS minimum equalizing driving head is based on RPV Level 0.5.	An analysis of the minimum equalizing driving head will be performed.	Analysis confirms the minimum equalizing driving head is 1 meter (3.28 ft).
22. The GDCS Deluge squib valves open as designed.	A vendor type test will be performed on a squib valve to open as designed.	Records of vendor type test concludes GDCS Deluge squib valves used open as designed.
23. GDCS software is developed in accordance with the software development program described in Section 3.2.	See Section 3.2.	See Section 3.2.
24. The GDCS injection piping is installed to allow venting of non-condensable gases to GDCS pools and to RPV, to prevent collection in the GDCS injection pipes.	Inspection(s) will be conducted of as-built GDCS injection piping installation to ensure there are no elevated piping loops or high-point traps in piping run from squib valves to GDCS pools and to RPV inlet nozzles.	Report(s) document(s) that based on inspection(s) of as-built GDCS injection piping, the as-built piping conforms to design that allows venting of non-condensable gases to GDCS pools and to RPV.

Table 2.4.2-3

ITAAC For The Gravity-Driven Cooling System

Design Commitment	Inspections, Tests, Analyses	Acceptance Criteria
25. Deluge system has redundant nonsafety-related programmable logic controllers (PLCs) that are connected to thermocouples in each cell of the lower drywell Basemat-internal Melt Arrest Coolability (BiMAC) system.	Inspections and tests will be performed to confirm the connection of the thermocouples to the PLCs.	Reports confirm that one thermocouple from each cell is monitored in one PLC, while the other thermocouple from each cell is monitored in a second PLC.
26. When temperatures exceed the setpoint at one set of thermocouples coincident with setpoints being exceeded at a second set of thermocouples in adjacent cells, each PLC starts an adjustable deluge squib valve non-bypassable timer.	a. Tests will be performed to confirm timer initiation usinf simulated signals.	Reports confirm that the timers are initiated and are configured such that both timers must actuate to send an initiate signal to the safety-related Deluge system lower drywell temperature switches.
	b. Type tests will be performed of the thermocouples to confirm detection of simulated core melt debris in the BiMAC cells.	Reports confirm that the thermocouopl.es are capable of detecting simulated core melt debris in the BiMAC cells.

Table 2.4.2-3

ITAAC For The Gravity-Driven Cooling System

Design Commitment	Inspections, Tests, Analyses	Acceptance Criteria
27. The GDCS deluge valve squib initiation signals are inhibited when either of the safety-related deluge system lower drywell temperature switches sense temperatures lower than a preset value coincident with the presence of both deluge squib valve timer signals.	Tests will be performed using simulated signals to confirm that the GDCS deluge valve squib initiation signals are inhibited when either of the safety-related deluge system lower drywell temperature switches sense temperatures lower than a preset value coincident with the presence of both deluge squib valve timer signals.	Reports confirm that GDCs deluge valve squib initiationi signals are inhibited when either of the safety-related deluge system lower drywell temperature switches sense temperatures lower than a preset value coincident with the presence of both deluge squib valve timer signals.

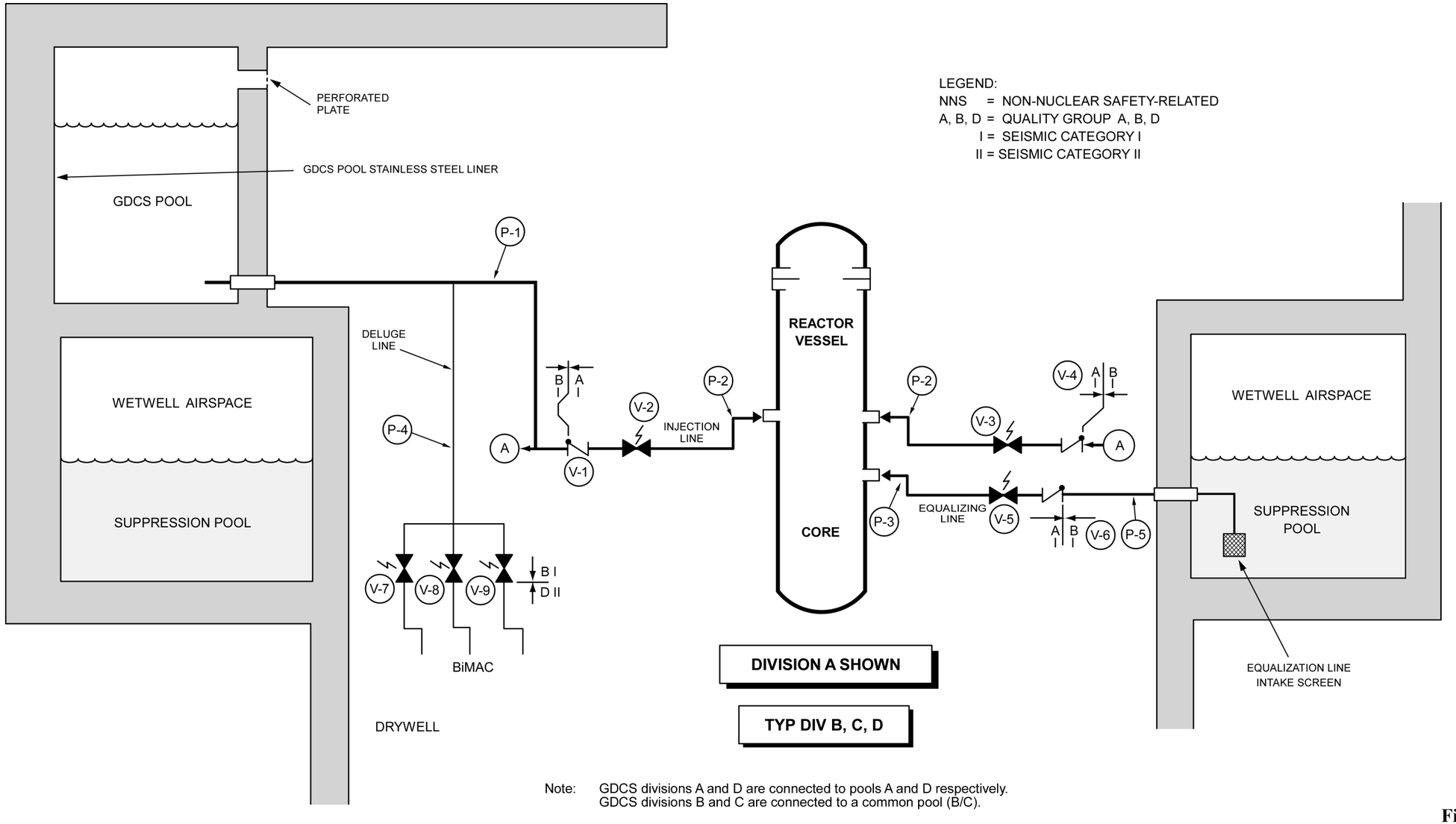

Note: GDCS divisions A and D are connected to pools A and D respectively.
GDCS divisions B and C are connected to a common pool (B/C).

Figure 2.4.2-1. Gravity-Driven Cooling System

2.5 REACTOR SERVICING EQUIPMENT

The following subsections describe the major reactor servicing equipment for the ESBWR.

2.5.1 Fuel Servicing Equipment

No ITAAC are required for this system.

2.5.2 Miscellaneous Servicing Equipment

No ITAAC are required for this system.

2.5.3 Reactor Pressure Vessel Servicing Equipment

No ITAAC are required for this system.

2.5.4 RPV Internals Servicing Equipment

No ITAAC are required for this system.

2.5.5 Refueling Equipment

The ESBWR is supplied with a Reactor Building (RB) refueling machine for fuel movement and a fuel handling machine used for fuel servicing and transporting tasks in the Fuel Building (FB).

Design Description

The functional arrangement of the RB refueling machine is that it is a gantry-type crane that spans the reactor vessel cavity and fuel and storage pools to handle fuel and perform other ancillary tasks. It is equipped with a traversing trolley on which is mounted a telescoping mast and integral fuel grapple. The machine is a rigid structure built to ensure accurate and repeatable positioning during the refueling process.

The functional arrangement of the FB fuel handling machine is that it is equipped with a traversing trolley on which is mounted a telescoping mast and integral fuel grapple. The machine is a rigid structure built to ensure accurate and repeatable positioning while handling fuel.

(1) The functional arrangement of the RB refueling machine is as described in the Design Description of this Subsection 2.5.5.

(2) The RB refueling machine is classified as nonsafety-related, but is designed as Seismic Category I.

(3) The RB refueling machine has an auxiliary hoist with sufficient load capability.

(4) The RB refueling machine is provided with controls interlocks.

(5) The functional arrangement of the FB fuel handling machine is as described in the Design Description of this Subsection 2.5.5.

(6) The FB fuel handling machine is classified as nonsafety-related, but is designed as Seismic Category I.

(7) The FB fuel handling machine has an auxiliary hoist with sufficient load capability.

(8) The FB fuel handling machine is provided with controls interlocks.

Inspections, Tests, Analyses and Acceptance Criteria

Table 2.5.5-1 provides a definition of the inspection, test, and/or analyses, together with associated acceptance criteria for the refueling machine.

Table 2.5.5-1

ITAAC for Refueling Machine

Design Commitment	Inspections, Tests, Analyses	Acceptance Criteria
1. The functional arrangement of the RB refueling machine is as described in the Design Description of this Subsection 2.5.5.	Inspections of the as-built RB refueling machine will be performed.	Report(s) document that the as-built RB refueling machine conforms to the functional arrangement as described in the Design Description of the Subsection 2.5.5.
2. The RB refueling machine is classified as nonsafety-related, but is designed as Seismic Category I.	Inspections and analyses of the as-built RB refueling machine system will be performed.	Report(s) document that the as-built RB refueling machine can withstand seismic dynamic loads without loss of load carrying or structural integrity functions.
3. The RB refueling machine has an auxiliary hoist with sufficient load capability.	Load tests on the as-built auxiliary hoists will be conducted in accordance with ANSI N14.6, 1993.	Report(s) document that a successful load test of each as-built auxiliary hoist has been performed in accordance with ANSI N14.6, 1993.

Table 2.5.5-1

ITAAC for Refueling Machine

Design Commitment	Inspections, Tests, Analyses	Acceptance Criteria
4. The RB refueling machine is provided with controls interlocks	Test shall be performed with actual or simulated signals to demonstrate that the as-built interlocks function as required.	Report(s) document that the tests have been completed and results demonstrate that the as-built interlocks function as follows:a. Prevent hoisting a fuel assembly over the vessel with a control rod removed; b. Prevent collision with fuel pool walls or other structures; c. Limit travel of the fuel grapple; d. Interlock grapple hook engagement with hoist load and hoist up power; and e. Ensure correct sequencing of the transfer operation in the automatic or manual mode.
5. The functional arrangement of the FB fuel handling machine is as described in the Design Description of this Subsection 2.5.5.	Inspections and/or analyses of the as-built FB fuel handling machine system will be performed.	Report(s) document that the as-built FB fuel handling machine conforms with the functional arrangement as described in the Design Description of the Subsection 2.5.5.
6. The FB fuel handling machine is classified as nonsafety-related, but is designed as Seismic Category I.	Inspections and analyses of the as-built FB fuel handling machine system will be performed.	Report(s) document that the as-built FB fuel handling machine can withstand seismic dynamic loads without loss of load carrying or structural integrity functions.

Table 2.5.5-1

ITAAC for Refueling Machine

Design Commitment	Inspections, Tests, Analyses	Acceptance Criteria
7. The FB fuel handling machine has an auxiliary hoist with sufficient load capability.	Load tests on the as-built auxiliary hoists will be conducted.	Report(s) document that a successful load test of the as-built auxiliary hoist has been performed at 125% of rated load capacity.
8. The FB fuel handling machine is provided with controls interlocks.	Test will be performed with actual or simulated signals to demonstrate that the as-built interlocks function as required.	Report(s) document that the tests have been completed and results demonstrate that the required interlocks function as follows: a. Prevent collision with fuel pool walls or other structures; b. Limit travel of the fuel grapple; c. Interlock grapple hook engagement with hoist load and hoist up power; and d. Ensure correct sequencing of the transfer operation in the automatic or manual mode.

2.5.6 Fuel Storage Facility

New and spent fuel storage facilities are provided for fuel and associated equipment.

Design Description

(1) New fuel storage racks are designed to withstand a design bases seismic event.

(2) Spent fuel storage racks are designed to withstand a design bases seismic event.

(3) Deleted.

(4) Deleted.

(5) The maximum spent fuel rack water coolant flow temperature at the rack exit shall be ≤ 100°C (212°F).

(6) The maximum stresses in the spent fuel racks do not exceed ASME Code, Section III, design allowable during accident conditions.

Inspections, Tests, Analyses and Acceptance Criteria

Table 2.5.6-1 provides a definition of the inspections, tests, and/or analyses, together with associated acceptance criteria for the new and spent fuel storage racks.

Table 2.5.6-1

ITAAC For The Fuel Storage Racks (Spent and New)

Design Commitment	Inspections, Tests, Analyses	Acceptance Criteria
1. New fuel storage racks are designed to withstand a design bases seismic event.	An inspection and analysis of the new fuel storage racks configuration will be performed to ensure the design conforms to the seismic analyses.	Report(s) document(s) inspection results and analysis results that demonstrate and conclude(s) that the new fuel racks can withstand seismic design basis dynamic loads, and that the as-built configuration conforms to the analyses.
2. Spent fuel storage racks are designed to withstand a design bases seismic event.	An inspection and analysis of the spent fuel storage racks configuration will be performed to ensure the design conforms to the seismic analyses.	Report(s) document(s) inspection results and analysis results that demonstrate and conclude(s) that the spent fuel racks can withstand seismic design basis dynamic and that the as-built configuration conforms to the analyses.
3. Deleted.		
4. Deleted.		
5. The maximum spent fuel rack water coolant flow temperature at the rack exit shall be ≤ 100°C (212°F).	Analyses will be performed to determine the maximum temperature of the spent fuel racks.	Analysis records confirm that the maximum temperature in the spent fuel racks is < 100°C (212°F) at rack exit under normal operating conditions.
6. The maximum stresses in the spent fuel racks do not exceed ASME Code, Section III, design allowable during accident conditions.	Analyses will be performed to confirm that maximum stresses in the spent fuel racks do not exceed ASME Code, Section III, design allowables during accident conditions.	Report(s) document that analysis records confirm that the maximum stresses in the spent fuel racks will not exceed ASME Code, Section III, design allowable during accident conditions.

2.5.7 Under-Vessel Servicing Equipment

No ITAAC are required for this system.

2.5.8 FMCRD Maintenance Area

No ITAAC are required for this system.

2.5.9 Fuel Cask Cleaning

No ITAAC are required for this system.

2.5.10 Fuel Transfer System

Design Description

The ESBWR is equipped with an Inclined Fuel Transfer System (IFTS). The functional arrangement of the IFTS consists of a terminus at the upper end in the Reactor Building refueling pool that allows the fuel to be tilted from a vertical position to an inclined position prior to transport to the spent fuel pool in the Fuel Building. There is means to lower the transport device (i.e., a carriage), means to seal off the top end of the transfer tube, and a control system to effect transfer. It has lower terminus in the fuel building storage pool, and a means to tilt the fuel to be removed from the transport cart. There are controls contained in local control panels to control fuel transfer. There is a means to seal off the upper and lower end of the tube while allowing filling and venting of the tube. The IFTS is anchored to the bottom of the refueling pool floor in the Reactor Building. The IFTS penetrates the Reactor Building at an angle down to the fuel storage pool in the Fuel Building. To ensure that there are no modes of normal or abnormal operation that will trap fuel assemblies without the ability to add water or prevent unconditional venting of pressure that may develop due to boiling, the IFTS is vented to the building through the hoist cable piping that originates at the top of the transfer tube which extend above the level of the water in the RB with no valves or obstructions.

(1) The functional arrangement of the IFTS is as described in this Section 2.5.10.

(2) The IFTS tubes and supporting structure can withstand an SSE without failure of the basic structure or compromising the integrity of adjacent equipment and structures. Therefore, the portion of the IFTS transfer tube assembly from where it interfaces with the upper fuel pool, the portion of the tube assembly extending through the building, the drain line connection, and the lower tube equipment (valve, support structure, and bellows) are designated as Nonsafety-Related and Seismic Category I. The winch, upper upender, and lower terminus are designated as Nonsafety-related and Seismic Category II. The remaining equipment is designated as Nonsafety-Related and Seismic Category NS.

(3) The IFTS is functionally capable of moving fuel.

(4) There is sufficient redundancy and diversity in equipment and controls to prevent loss of load (carriage with fuel is released in an uncontrolled manner) and that there are no modes of operation that allow simultaneous opening of valves that could cause draining of water from the upper pool in an uncontrolled manner.

(5) The IFTS can be maintained filled with water for cooling in the event the fuel transport cart with fuel loaded within the IFTS cannot be moved.

(6) For personnel radiation protection, access (ingress and egress) to areas adjacent to the transfer tube is controlled through a system of physical barriers, interlocks and alarms.

Inspections, Tests, Analyses and Acceptance Criteria

Table 2.5.10-1 provides a definition of the inspections, tests, and/or analyses, together with associated acceptance criteria for the Inclined Fuel Transfer System.

Table 2.5.10-1

ITAAC For The Inclined Fuel Transfer System

Design Commitment	Inspections, Tests, Analyses	Acceptance Criteria
1. The functional arrangement of the IFTS is as described in this Section 2.5.10.	Inspections of the as-built IFTS system will be performed.	Report(s) document that the as-built IFTS conforms to the functional arrangement as described in this Section 2.5.10.
2. The IFTS tubes and supporting structure can withstand an SSE without failure of the basic structure or compromising the integrity of adjacent equipment and structures. Therefore, the portion of the IFTS transfer tube assembly from where it interfaces with the upper fuel pool, the portion of the tube assembly extending through the building, the drain line connection, and the lower tube equipment (valve, support structure, and bellows) are designated as Nonsafety-Related and Seismic Category I. The winch, upper upender, and lower terminus are designated as Nonsafety-related and Seismic Category II. The remaining equipment is designated as Nonsafety-Related and Seismic Category NS.	i) Inspection will be performed to verify that the seismic Category I and II equipment is located in a seismic Category I structure. ii) Type tests, analyses, or a combination of type tests and analyses of Seismic Category I and II equipment will be performed.	Report(s) document that: i) Inspection results verify that the seismic Category I and II equipment is located in a seismic Category I structure. ii) A report exists and concludes that the Seismic Category I and II equipment can withstand seismic design basis loads without loss of safety function.

Table 2.5.10-1

ITAAC For The Inclined Fuel Transfer System

Design Commitment	Inspections, Tests, Analyses	Acceptance Criteria
3. The IFTS is functionality capable of moving fuel.	Tests will be performed using installed controls and power supplies utilizing dummy fuel bundles for successful demonstration of fuel movement from the refuel pool to the spent fuel pool and return.	Report(s) document that tests conclude that the as-built IFTS passes functional testing.
4. There is sufficient redundancy and diversity in equipment and controls to prevent loss of load (carriage with fuel is released in an uncontrolled manner) and that there are no modes of operation that allow simultaneous opening of valves that could cause draining of water from the upper pool in an uncontrolled manner.	Tests and inspections will be performed on the as-built IFTS to confirm it prevents loss of load and draining water from the upper pool in an uncontrolled manner.	Report(s) document that tests and inspections confirm the as-built IFTS prevents loss of load and draining water from the upper pool in an uncontrolled manner.
5. The IFTS can be maintained filled with water for cooling in the event the fuel transport cart with fuel loaded within the IFTS cannot be moved.	Tests and inspection will be performed on the as-built IFTS that confirm the as-built IFTS can be maintained filled with water in the event the fuel transport cart with fuel loaded within the IFTS cannot be moved.	Report(s) document tests and inspections that confirm the as-built IFTS can be maintained filled with water in the event the fuel transport cart with fuel loaded within the IFTS cannot be moved.

Table 2.5.10-1

ITAAC For The Inclined Fuel Transfer System

Design Commitment	Inspections, Tests, Analyses	Acceptance Criteria
6. For personnel radiation protection, access (ingress and egress) to areas adjacent to the transfer tube is controlled through a system of physical barriers, interlocks and alarms.	Tests and inspections will be performed as follows: a. Inspections will be performed to verify that physical barriers exist between the transfer tube and adjacent areas. b. Tests or inspections will confirm that the as-built interlocks and alarms exist for controlling access to the transfer tube area and indicating operation of the IFTS.	Report(s) document results as follows: a. Inspection report(s) document that physical barriers exist between the transfer tube and adjacent areas. b. Test or inspection report(s) conclude that the as-built interlocks and alarms exist for controlling access to the transfer tube area and indicating operation of the IFTS.

2.5.11 (Deleted)

2.5.12 (Deleted)

2.6 REACTOR AND CONTAINMENT AUXILIARY SYSTEMS

The following subsections describe the auxiliary systems for the ESBWR.

2.6.1 Reactor Water Cleanup/Shutdown Cooling System

Design Description

The Reactor Water Cleanup/Shutdown Cooling (RWCU/SDC) system, purifies reactor coolant during normal operation and shutdown, provides shutdown cooling to bring the reactor to cold shutdown, and removes core decay heat to maintain cold shutdown. The RWCU/SDC system also provides long term post-LOCA shutdown cooling in the unlikely event there has been fuel failure. The RWCU/SDC system is as shown in Figure 2.6.1-1.

(1) The functional arrangement of the RWCU/SDC system is as described in the Design Description of Section 2.6.1, Table 2.6.1-1, and Figure 2.6.1-1.

(2) The containment isolation portions of the RWCU/SDC System are addressed in Tier 1, Subsection 2.15.1.

(3) Pressure Boundary Integrity

a. The components identified in Table 2.6.1-1 as ASME Code Section III retain their pressure boundary integrity at their design pressure.

b. The piping identified in Table 2.6.1-1 as ASME Code Section III retain their pressure boundary integrity at their design pressure.

(4) Main Control Room (MCR) alarms and remote operation features of mechanical equipment provided for the RWCU/SDC System are defined in Table 2.6.1-1.

(5) Manual closure of the RPV bottom head isolation valve can be accomplished remotely.

(6) Each of the RWCU/SDC System safety-related components with safety-related power identified in Table 2.6.1-1 is powered from its respective safety-related division.

(7) The safety-related components identified in Table 2.6.1-1 can withstand seismic design basis loads without loss of safety function.

(8) ASME Code Section III

a1. The components identified in Table 2.6.1-1 as ASME Code Section III are designed in accordance with ASME Code Section III requirements and seismic Category I requirements.

a2. The components identified in Table 2.6.1-1 as ASME Code Section III shall be reconciled with the design requirements.

a3. The components identified in Table 2.6.1-1 as ASME Code Section III are fabricated, installed, and inspected in accordance with ASME Code Section III requirements.

b1. The piping identified in Table 2.6.1-1 as ASME Code Section III is designed in accordance with ASME Code Section III requirements and seismic Category I requirements.

b2. The as-built piping identified in Table 2.6.1-1 as ASME Code Section III shall be reconciled with the with the piping design requirements.

b3. The piping identified in Table 2.6.1-1 as ASME Code Section III is fabricated, installed, and inspected in accordance with ASME Code Section III requirements.

(9) Pressure Boundary Welds

a. Pressure boundary welds in components identified in Table 2.6.1-1 as ASME Code Section III meet ASME Code Section III requirements.

b. Pressure boundary welds in piping identified in Table 2.6.1-1 as ASME Code Section III meet ASME Code Section III requirements.

Inspections, Tests, Analyses and Acceptance Criteria

Table 2.6.1-2 provides the inspections, tests, and/or analyses that will be undertaken for the RWCU/SDC system.

Table 2.6.1-1

Reactor Water Cleanup/Shutdown Cooling System Mechanical Equipment

Equipment Name (Description)	Equipment Identifier See Figure 2.6.1-1	ASME Code Section III	Seismic Cat. I	RCPB Component	Containment Isolation Valve	Remotely Operated	Loss of Motive Power Position	MCR Alarms
Demineralizers	-	Yes	Yes	No	No	No	---	Yes
Higher Capacity Pumps	-	Yes	Yes	No	No	Yes	Off	Yes
Lower Capacity Pumps	-	Yes	Yes	No	No	Yes	Off	Yes
Adjustable Speed Motor Drives	-	Yes	Yes	No	No	Yes	Off	Yes
Regenerative Heat Exchangers (RHXs)	-	Yes	Yes	No	No	No	---	No
Non-Regenerative Heat Exchangers (NRHXs)	-	Yes	Yes	No	No	No	---	No
Midvessel Suction Containment Inboard Isolation Valve–	V-1(A,B)	Yes	Yes	Yes	Yes	Yes	Close	Yes
RPV Bottom Suction Containment Inboard Isolation Valve	V-4(A,B)	Yes	Yes	Yes	Yes	Yes	Close	Yes
Midvessel Suction Containment Outboard Isolation Valve	V-2(A,B)	Yes	Yes	Yes	Yes	Yes	Close	Yes

Table 2.6.1-1

Reactor Water Cleanup/Shutdown Cooling System Mechanical Equipment

Equipment Name (Description)	Equipment Identifier See Figure 2.6.1-1	ASME Code Section III	Seismic Cat. I	RCPB Component	Containment Isolation Valve	Remotely Operated	Loss of Motive Power Position	MCR Alarms
Midvessel Suction Flow Control Valve	V-3(A,B)	Yes	Yes	No	No	Yes	Close	Yes
RPV Bottom Suction Containment Outboard Isolation Valve	V-5(A,B)	Yes	Yes	Yes	Yes	Yes	Close	Yes
RPV Bottom Suction Valve – Motor Operated	V-6(A,B)	Yes	Yes	No	No	Yes	As-Is	Yes
RPV Bottom Suction Sample Inboard Containment Isolation Valve	V-7(A,B)	Yes	Yes	Yes	Yes	Yes	Close	Yes
RPV Bottom Suction Sample Outboard Containment Isolation Valve	V-8(A,B)	Yes	Yes	Yes	Yes	Yes	Close	Yes
Higher Capacity Pump Suction Valve	V-9(A,B)	Yes	Yes	No	No	Yes	As-Is	No
Return Line Isolation Valve	V-15(A,B)	Yes	Yes	No	No	Yes	As-Is	No

Table 2.6.1-1

Reactor Water Cleanup/Shutdown Cooling System Mechanical Equipment

Equipment Name (Description)	Equipment Identifier See Figure 2.6.1-1	ASME Code Section III	Seismic Cat. I	RCPB Component	Containment Isolation Valve	Remotely Operated	Loss of Motive Power Position	MCR Alarms
Lower Capacity Pump Suction Valve	V-10(A,B)	Yes	Yes	No	No	Yes	As-Is	No
Demineralizer Inlet Valve	V-11(A,B)	Yes	Yes	No	No	No	As-Is	Yes
Demineralizer Outlet Valve	V-12(A,B)	Yes	Yes	No	No	No	As-Is	Yes
Demineralizer Bypass Flow Control Valve	V-13(A,B)	Yes	Yes	No	No	Yes	Open	Yes
Overboard Flow Control Valve	V-14(A,B)	Yes	Yes	No	No	Yes	Closed	Yes
Suction Lines from RPV Nozzles to the Outboard Containment Quality Group Break	P-1(A,B)	Yes	Yes	Yes	--	--	--	--
FAPC Suppression Pool to RWCU Pump Suction Isolation Valve	V-16(A,B)	Yes	Yes	No	No	Yes	As-is	Yes

Table 2.6.1-1

Reactor Water Cleanup/Shutdown Cooling System Mechanical Equipment

Equipment Name (Description)	Equipment Identifier See Figure 2.6.1-1	ASME Code Section III	Seismic Cat. I	RCPB Component	Containment Isolation Valve	Remotely Operated	Loss of Motive Power Position	MCR Alarms
RWCU Pump Discharge to FAPCS Containment Cooling Line Isolation Valve	V-17(A,B)	Yes	Yes	No	No	Yes	As-is	Yes
RWCU Pump Discharge to RWCU Mid-vessel Suction Line Isolation Valve	V-18(A,B)	Yes	Yes	No	No	Yes	As-is	Yes
Reactor Bottom Flow Sample Line to the Outboard Containment Isolation Valve	P-2(A,B)	Yes	Yes	Yes	--	--	--	--
RWCU/SDC Return Line from the Return Line Isolation Valve up to and including the connection to the Feedwater Line	P-4(A,B)	Yes	Yes	No	--	--	--	--
RWCU/SDC Overboarding Line	P-5(A,B)	Yes	Yes	No	--	--	--	--

Table 2.6.1-1

Reactor Water Cleanup/Shutdown Cooling System Mechanical Equipment

Equipment Name (Description)	Equipment Identifier See Figure 2.6.1-1	ASME Code Section III	Seismic Cat. I	RCPB Component	Containment Isolation Valve	Remotely Operated	Loss of Motive Power Position	MCR Alarms
RWCU/SDC Lines from the Outboard Containment Isolation Valve Up to the Return Line Isolation Valve	P-3(A,B)	Yes	Yes	No	--	--	--	--
Suction Cross-connection Line from FAPCS Suppression Pool Suction	P-6(A,B)	Yes	Yes	No	--	--	--	--
Discharge Cross-connection Line to FAPCS Containment Cooling Line	P-7(A,B)	Yes	Yes	No	--	--	--	--
Discharge Cross-connection Line to RWCU Mid-vessel Suction	P-8(A,B)	Yes	Yes	No	--	--	--	--

Note: A dash means not applicable.

Table 2.6.1-2

ITAAC For The Reactor Water Cleanup/Shutdown Cooling System

Design Commitment	Inspections, Tests, Analyses	Acceptance Criteria
1. The functional arrangement of the RWCU/SDC system is as described in the Design Description of Section 2.6.1, Table 2.6.1-1, and Figure 2.6.1-1.	Inspection of the as-built system will be performed.	Report(s) document that the as-built RWCU/SDC system conforms to the functional arrangement described in the Design Description of Section 2.6.1, Table 2.6.1-1, and Figure 2.6.1-1. For components identified in Table 2.6.1-1 as ASME Code Section III, this report is an ASME Code report.
2. The containment isolation portions of the RWCU/SDC System are addressed in Tier 1, Subsection 2.15.1.	See Tier 1, Subsection 2.15.1.	See Tier 1, Subsection 2.15.1.
3. Pressure Boundary Integrity		
a) The components identified in Table 2.6.1-1 as ASME Code Section III retain their pressure boundary integrity at their design pressure.	A hydrostatic test will be conducted on those code components of the RWCU/SDC system required to be hydrostatically tested by the ASME code.	An ASME Code Report exists and concludes that the results of the hydrostatic test of the ASME Code components of the RWCU/SDC System comply with the requirements of the ASME Code Section III.
b) The piping identified in Table 2.6.1-1 as ASME Code Section III retains its pressure boundary integrity at its design pressure.	A hydrostatic test will be conducted on the code piping of the RWCU/SDC System required to be hydrostatically tested by the ASME Code.	An ASME Code Report exists and concludes that the results of the hydrostatic test of the ASME Code piping of the RWCU/SDC System comply with the requirements of the ASME Code Section III.

Table 2.6.1-2

ITAAC For The Reactor Water Cleanup/Shutdown Cooling System

Design Commitment	Inspections, Tests, Analyses	Acceptance Criteria
4. Main Control Room (MCR) alarms and remote operation features of mechanical equipment provided for the RWCU/SDC System are defined in Table 2.6.1-1	Inspections will be performed on the MCR alarms and remote operation features of mechanical equipment for the RWCU/SDC system.	Report(s) document that MCR alarms and remote operation features of mechanical equipment exist or can be retrieved in the Control Room as defined in Table 2.6.1-1.
5. Manual closure of the RPV bottom head isolation valve can be accomplished remotely.	Remote manual closure testing of the RPV bottom head isolation valve will be performed by closing the inboard containment isolation valve in the RWCU/SDC system suction line from the RPV bottom head.	Report(s) document that the RPV bottom head isolation valve can be manually closed remotely.
6. Each of the RWCU/SDC System safety-related components with safety-related power identified in Table 2.6.1-1 is powered from its respective safety-related division.	Testing will be performed on the RWCU/SDC System by providing a test signal in only one safety-related division at a time.	Report(s) document that a test signal exists in the safety-related division (or at the equipment identified in Table 2.6.1-1 powered from the safety-related division) under test in the RWCU/SDC System.

Table 2.6.1-2

ITAAC For The Reactor Water Cleanup/Shutdown Cooling System

Design Commitment	Inspections, Tests, Analyses	Acceptance Criteria
7. The safety-related components identified in Table 2.6.1-1 can withstand Seismic Category I loads without loss of safety-related function.	ii) Type tests, analyses, or a combination of type tests and analyses of safety-related Seismic Category I equipment will be performed under analytical assumptions, or under conditions which bound the Seismic Category I design requirements.	ii) A report exists and concludes that the components identified in Table 2.6.1-1 can withstand design basis loads without loss of safety-related function.
	iii) Inspection and analyses will be performed to verify that the as-installed components in Table 2.6.1-1, including anchorage, are bounded by the testing or analyzed conditions.	iii) A report exists and concludes that the as-built components identified in Table 2.6.1-1, including anchorage have been tested or analyzed under the conditions necessary to ensure compliance with Seismic Category I design requirements.

Table 2.6.1-2

ITAAC For The Reactor Water Cleanup/Shutdown Cooling System

Design Commitment	Inspections, Tests, Analyses	Acceptance Criteria
8.a1)The components identified in Table 2.6.1-1 as ASME Code Section III are designed in accordance with ASME Code Section III requirements and seismic Category I requirements.	Inspection of ASME Code Design Reports (NCA-3550) and required documents will be conducted.	ASME Code Design Reports (NCA-3550) (certified, when required by ASME Code) conclude that the design of the RWCU/SCS components identified in Table 2.6.1-1 as ASME Code Section III complies with the requirements of the ASME Code, Section III, including for those stresses and loads related to fatigue (including environmental effects), thermal expansion, seismic, and combined.
a2) The components identified in Table 2.6.1-1 as ASME Code Section III shall be reconciled with the design requirements.	A reconciliation analysis of the components using as-design and as-built information and ASME Code certified Design Reports (NCA-3550) will be performed.	An ASME Code Design Report (certified, when required by ASME Code) exists and concludes that design reconciliation has been completed in accordance with the ASME Code for as-built reconciliation of the RWCU/SCS components identified in Table 2.6.1-1 as ASME Code Section III. The report documents the results of the reconciliation analysis.

Table 2.6.1-2

ITAAC For The Reactor Water Cleanup/Shutdown Cooling System

Design Commitment	Inspections, Tests, Analyses	Acceptance Criteria
a3) The components identified in Table 2.6.1-1 as ASME Code Section III are fabricated, installed, and inspected in accordance with ASME Code Section III requirements.	Inspection of the components will be conducted.	ASME Code Data Reports (including N-5 Data reports, where applicable) (certified, when required by ASME Code) and inspection reports document that the components identified in Table 2.6.1-1 as ASME Code Section III are fabricated, installed, and inspected in accordance with ASME Code Section III requirements.
b1). The piping identified in Table 2.6.1-1 as ASME Code Section III is designed in accordance with ASME Code Section III requirements and seismic Category I requirements.	Inspection of ASME Code certified Design Reports (NCA-3550) and required documents will be conducted. {{Design Acceptance Criteria}}	ASME Code certified Design Reports (NCA-3550) (certified, when required by ASME Code) conclude that the design of the RWCU/SCS piping identified in Table 2.6.1-1 as ASME Code Section III complies with the requirements of the ASME Code, Section III, including for those stresses and loads related to fatigue (including environmental effects), thermal expansion, seismic, and combined. {{Design Acceptance Criteria}}

Table 2.6.1-2

ITAAC For The Reactor Water Cleanup/Shutdown Cooling System

Design Commitment	Inspections, Tests, Analyses	Acceptance Criteria
b2) The as-built piping identified in Table 2.6.1-1 as ASME Code Section III shall be reconciled with the with the piping design requirements.	A reconciliation analysis of the piping using the as-designed and as-built information and ASME Code certified Design Reports (NCA-3550) will be performed.	An ASME Code Design Report (certified, when required by ASME Code) exists and concludes that design reconciliation has been completed in accordance with the ASME Code for as-built reconciliation of the RWCU/SCS piping identified in Table 2.6.1-1 as ASME Code Section III. The report documents the results of the reconciliation analysis.
b3) The piping identified in Table 2.6.1-1 as ASME Code Section III is fabricated, installed, and inspected in accordance with ASME Code Section III requirements.	Inspections of the piping will be conducted.	ASME Code Data Reports (certified, when required by ASME Code) and inspection reports (including N-5 Data Reports where applicable) document that the piping identified in Table 2.6.1-1 as ASME Code Section III is fabricated, installed, and inspected in accordance with ASME Code Section III requirements.
9. Pressure Boundary Welds a) Pressure boundary welds in components identified in Table 2.6.1-1 as ASME Code Section III meet ASME Code Section III requirements.	Inspection of the as-built pressure boundary welds will be performed in accordance with the ASME Code Section III.	An ASME Code Report exists and concludes that the ASME Code Section III requirements are met for non-destructive examination of pressure boundary welds in the RWCU/SDC System.

Table 2.6.1-2

ITAAC For The Reactor Water Cleanup/Shutdown Cooling System

Design Commitment	Inspections, Tests, Analyses	Acceptance Criteria
b) Pressure boundary welds in piping identified in Table 2.6.1-1 as ASME Code Section III meet ASME Code Section III requirements	Inspection of the as-built pressure boundary welds will be performed in accordance with the ASME Code Section III.	An ASME Code Report exists and concludes that the ASME Code Section III requirements are met for non-destructive examination of pressure boundary welds in the RWCU/SDC System

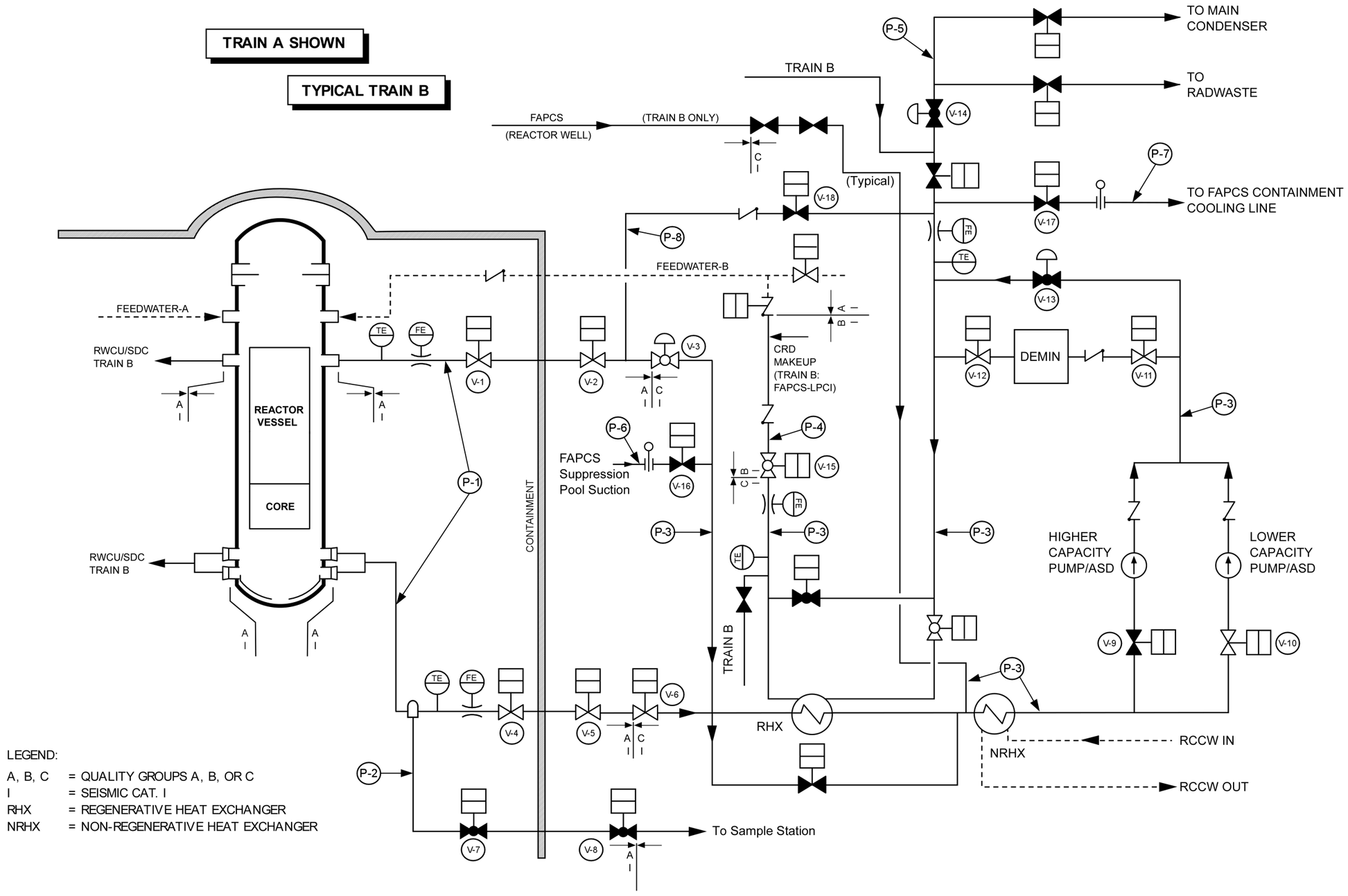

Figure 2.6.1-1. Reactor Water Cleanup/Shutdown Cooling System

2.6.2 Fuel And Auxiliary Pools Cooling System

Design Description

The Fuel and Auxiliary Pools Cooling System (FAPCS) provides cooling and cleaning of pools located in the containment, reactor building and fuel building, during normal plant operation. The FAPCS provides flow paths for filling and makeup of these pools during normal plant operation and under post-accident condition. The FAPCS provides suppression pool cooling and LPCI as active backup of the passive containment heat removal systems.

The FAPCS is as shown in Figure 2.6.2-1.

(1) The functional arrangement of the FAPCS is as described in the Design Description of this Subsection 2.6.2 and as shown in Figure 2.6.2-1.

(2) ASME Code Section III

a1. The components identified in Table 2.6.2-1 as ASME Code Section III are designed in accordance with ASME Code Section III requirements and seismic Category I requirements.

a2. The components identified in Table 2.6.2-1 as ASME Code Section III shall be reconciled with the design requirements.

a3. The components identified in Table 2.6.2-1 as ASME Code Section III are fabricated, installed, and inspected in accordance with ASME Code Section III requirements.

b1. The piping identified in Table 2.6.2-1 as ASME Code Section III is designed in accordance with ASME Code Section III requirements and seismic Category I requirements.

b2. The as-built piping identified in Table 2.6.2-1 as ASME Code Section III shall be reconciled with the with the piping design requirements.

b3. The piping identified in Table 2.6.2-1 as ASME Code Section III is fabricated, installed, and inspected in accordance with ASME Code Section III requirements.

(3) Pressure Boundary Integrity

a. Pressure boundary welds in components identified in Table 2.6.2-1 as ASME Code Section III meet ASME Code Section III requirements.

b. Pressure boundary welds in piping identified in Table 2.6.2-1 as ASME Code Section III meet ASME Code Section III requirements.

(4) The components and piping identified in Table 2.6.2-1 as ASME Code Section III retain their pressure boundary integrity at their design pressure.

(5) The Seismic Category I componentsidentified in Table 2.6.2-1 can withstand seismic design basis loads without loss of safety function.

(6) The containment isolation portions of the FAPCS are addressed in Tier 1, Subsection 2.15.1.

(7) The FAPCS performs the following nonsafety-related functions:

a. Suppression pool cooling mode

b. Low-pressure coolant injection mode.

c. External connection for emergency water to IC/PCC pool and Spent Fuel Pool.

(8) FAPCS minimum inventory of alarms, displays, and status indications in the main control room (MCR) are addressed in Section 3.3.

(9) Level instruments with adequate operating ranges are provided for the Spent Fuel Pool and IC/PCC pools.

(10) Equipment qualification for the FAPCS is addressed in Tier 1 Section 3.8.

(11) Following a loss of active cooling without makeup that persists for 72 hours, the water level in the Spent Fuel Pool remains above the top of active fuel.

(12) Following a loss of active cooling without makeup that persists for 72 hours, the water level in the Buffer Pool remains above the top of active fuel.

Inspections, Tests, Analyses and Acceptance Criteria

Table 2.6.2-2 provides a definition of the inspections, tests and/or analyses, together with associated acceptance criteria for the FAPCS.

Table 2.6.2-1

FAPCS Mechanical Equipment

Equipment Name (Description)	Equipment Identifier See Figure 2.6.2-1	ASME Code Section III	Seismic Cat. I	RCPB Component	Containment Isolation Valve.	Remotely Operated	Loss of Motive Power Position
Suppression Pool Suction Outboard Isolation Valve	V-1	Yes	Yes	No	Yes	Yes	As-Is
Suppression Pool Suction Outboard Isolation Valve	V-2	Yes	Yes	No	Yes	Yes	As-Is
Suppression Pool Suction Outboard Isolation Valve	V-3	Yes	Yes	No	Yes	Yes	As-Is
Suppression Pool Suction Outboard Isolation Valve	V-4	Yes	Yes	No	Yes	Yes	As-Is
Suppression Pool Return Outboard Isolation Valve	V-5	Yes	Yes	No	Yes	Yes	As-Is
Suppression Pool Return Outboard Isolation Valve	V-6	Yes	Yes	No	Yes	Yes	As-Is
Suppression Pool Return Inboard Isolation Valve	V-7	Yes	Yes	No	Yes	N/A	N/A
Suppression Pool Return Inboard Isolation Valve	V-8	Yes	Yes	No	Yes	N/A	N/A
Drywell Spray Outboard Isolation Valve	V-9	Yes	Yes	No	Yes	Yes	Closed

Table 2.6.2-1

FAPCS Mechanical Equipment

Equipment Name (Description)	Equipment Identifier See Figure 2.6.2-1	ASME Code Section III	Seismic Cat. I	RCPB Component	Containment Isolation Valve.	Remotely Operated	Loss of Motive Power Position
Drywell Spray Inboard Isolation Valve	V-10	Yes	Yes	No	Yes	N/A	N/A
GDCS Pool Return Outboard Isolation Valve	V-11	Yes	Yes	No	Yes	Yes	Closed
GDCS Pool Return Inboard Isolation Valve	V-12	Yes	Yes	No	Yes	N/A	N/A
GDCS Pool Suction Outboard Isolation Valve	V-13	Yes	Yes	No	Yes	Yes	Closed
GDCS Pool Suction Inboard Isolation Valve	V-14	Yes	Yes	No	Yes	Yes	Closed
Reactor Well Drain Inboard Isolation Valve	V-15	Yes	Yes	No	Yes	N/A	N/A
Reactor Well Drain Inboard Isolation Valve	V-16	Yes	Yes	No	Yes	N/A	N/A
FPS Water Makeup Valve to Spent Fuel Pool	V-17	Yes	Yes	No	No	N/A	N/A
FPS Water Makeup Check Valve to Spent Fuel Pool	V-18	Yes	Yes	No	No	N/A	N/A

Table 2.6.2-1

FAPCS Mechanical Equipment

Equipment Name (Description)	Equipment Identifier See Figure 2.6.2-1	ASME Code Section III	Seismic Cat. I	RCPB Component	Containment Isolation Valve.	Remotely Operated	Loss of Motive Power Position
FPS Water Makeup Valve to Spent Fuel Pool	V-19	Yes	Yes	No	No	N/A	N/A
FPS Water Makeup Check Valve to Spent Fuel Pool	V-20	Yes	Yes	No	No	N/A	N/A
External Water Makeup Valve to Spent Fuel Pool	V-21	Yes	Yes	No	No	N/A	N/A
External Water Makeup Check Valve to Spent Fuel Pool	V-22	Yes	Yes	No	No	N/A	N/A
FPS Water Makeup Valve to IC/PCCS Pool	V-23	Yes	Yes	No	No	N/A	N/A
FPS Water Makeup Check Valve to IC/PCCS Pool	V-24	Yes	Yes	No	No	N/A	N/A
FPS Water Makeup Valve to IC/PCCS Pool	V-25	Yes	Yes	No	No	N/A	N/A
FPS Water Makeup Check Valve to IC/PCCS Pool	V-26	Yes	Yes	No	No	N/A	N/A
External Water Makeup Valve to IC/PCCS Pool	V-27	Yes	Yes	No	No	N/A	N/A

Table 2.6.2-1

FAPCS Mechanical Equipment

Equipment Name (Description)	Equipment Identifier See Figure 2.6.2-1	ASME Code Section III	Seismic Cat. I	RCPB Component	Containment Isolation Valve.	Remotely Operated	Loss of Motive Power Position
External Water Makeup Check Valve to IC/PCCS Pool	V-28	Yes	Yes	No	No	N/A	N/A
LPCI Testable Check Valve	V-29	Yes	Yes	No	No	N/A	N/A
LPCI Testable Check Valve	V-30	Yes	Yes	No	No	N/A	N/A

Table 2.6.2-2

ITAAC For The Fuel and Auxiliary Pools Cooling Cleanup System

Design Commitment	Inspections, Tests, Analyses	Acceptance Criteria
1. The functional arrangement of the FAPCS is as described in the Design Description of Subsection 2.6.2 and Figure 2.6.2-1	Inspections of the as-built system will be conducted.	Inspection report(s) document that the as-built FAPCS conforms to the functional arrangement described in Subsection 2.6.2 and shown on Figure 2.6.2-1. For components and piping identified in Table 2.6.2-1 as ASME Code Section III, this report is an ASME Code report.
2. ASME Code Section III a1. The components identified in Table 2.6.2-1 as ASME Code Section III are designed in accordance with ASME Code Section III requirements and seismic Category I requirements	Inspection of ASME Code Design Reports (NCA-3550) and required documents will be conducted.	ASME Code Design Reports (NCA-3550) (certified, when required by ASME Code) conclude that the design of the FAPCS components identified in Table 2.6.2-1 as ASME Code Section III complies with the requirements of the ASME Code, Section III, including for those stresses and loads related to fatigue (including environmental effects), thermal expansion, seismic, and combined.

Table 2.6.2-2

ITAAC For The Fuel and Auxiliary Pools Cooling Cleanup System

Design Commitment	Inspections, Tests, Analyses	Acceptance Criteria
a2. The components identified in Table 2.6.2-1 as ASME Code Section III shall be reconciled with the design requirements.	A reconciliation analysis of the components using as-design and as-built information and ASME Code certified Design Reports (NCA-3550) will be performed.	ASME Code Data Reports (including N-5 Data reports, where applicable) (certified, when required by ASME Code) and inspection reports document that the components identified in Table 2.6.2-1 as ASME Code Section III are fabricated, installed, and inspected in accordance with ASME Code Section III requirements.
b1. The piping identified in Table 2.6.2-1 as ASME Code Section III is designed in accordance with ASME Code Section III requirements and seismic Category I requirements.	Inspection of ASME Code certified Design Reports (NCA-3550) and required documents will be conducted. {{Design Acceptance Criteria}}	ASME Code certified Design Reports (NCA-3550) (certified, when required by ASME Code) conclude that the design of the FAPCS piping identified in Table 2.6.2-1 as ASME Code Section III complies with the requirements of the ASME Code, Section III, including for those stresses and loads related to fatigue (including environmental effects), thermal expansion, seismic, and combined. {{Design Acceptance Criteria}}

Table 2.6.2-2

ITAAC For The Fuel and Auxiliary Pools Cooling Cleanup System

Design Commitment	Inspections, Tests, Analyses	Acceptance Criteria
b2. The as-built piping identified in Table 2.6.2-1 as ASME Code Section III shall be reconciled with the with the piping design requirements.	A reconciliation analysis of the piping using the as-designed and as-built information and ASME Code certified Design Reports (NCA-3550) will be performed.	An ASME Code Design Report (certified, when required by ASME Code) exists and concludes that design reconciliation has been completed in accordance with the ASME Code for as-built reconciliation of the FAPCS piping identified in Table 2.6.2-1 as ASME Code Section III. The report documents the results of the reconciliation analysis.
b3. The piping identified in Table 2.6.2-1 as ASME Code Section III is fabricated, installed, and inspected in accordance with ASME Code Section III requirements.	Inspections of the piping will be conducted.	ASME Code Data Reports (certified, when required by ASME Code) and inspection reports (including N-5 Data Reports where applicable) document that the piping identified in Table 2.6.2-1 as ASME Code Section III is fabricated, installed, and inspected in accordance with ASME Code Section III requirements.
3. Pressure Boundary Welds a. Pressure boundary welds in components identified in Table 2.6.2-1 as ASME Code Section III meet ASME Code Section III requirements.	Inspection of the as-built pressure boundary welds will be performed in accordance with ASME Code Section III.	An ASME Code Report exists and concludes that the ASME Code Section III requirements are met for non-destructive examination of pressure boundary welds in the FAPCS.

Table 2.6.2-2

ITAAC For The Fuel and Auxiliary Pools Cooling Cleanup System

Design Commitment	Inspections, Tests, Analyses	Acceptance Criteria
b. Pressure boundary welds in piping identified in Table 2.6.2-1 as ASME Code Section III meet ASME Code Section III requirements.	Inspection of the as-built pressure boundary welds will be performed in accordance with ASME Code Section III.	An ASME Code Report exists and concludes that the ASME Code Section III requirements are met for non-destructive examination of pressure boundary welds in the FAPCS.
4. The components and piping identified in Table 2.6.2-1 as ASME Code Section III retain their pressure boundary integrity at their design pressure.	i) A hydrostatic test will be performed on the components and piping required by the ASME Code Section III to be tested. ii) Impact testing will be performed on the containment and pressure-retaining materials in accordance with the ASME Code Section III to confirm the fracture toughness of the materials.	i) An ASME Code report exists and concludes that the results of the hydrostatic test of the components and piping identified in Table 2.6.2-1 as ASME Code Section III comply with the requirements of the ASME Code Section III. ii) An ASME Code report exists and concludes that the containment and pressure-retaining penetration materials comply with fracture toughness requirements of the ASME Code section III.
5a. The seismic Category I components identified in Table 2.6.2-1 can withstand seismic design basis loads without loss of safety function.	i) Inspection will be performed to verify that the seismic Category I components and valves identified in Table 2.6.2-1 are located in a seismic Category I structure.	Report(s) document that: i) The seismic Category I components identified in Table 2.6.2-1 is located in in a seismic Category I structure.

Table 2.6.2-2

ITAAC For The Fuel and Auxiliary Pools Cooling Cleanup System

Design Commitment	Inspections, Tests, Analyses	Acceptance Criteria
	ii) Type tests, analyses, or a combination of type tests and analyses of seismic Category I equipment will be performed. iii) Inspection will be performed for the existence of a report verifying that the as-installed components including anchorage is seismically bounded by the tested or analyzed conditions	ii) A report exists and concludes that the seismic Category I equipment can withstand seismic design basis loads without loss of safety function. iii) A report exists and concludes that the as-installed componentst including anchorage is seismically bounded by the tested or analyzed conditions.
6. The containment isolation portions of the FAPCS are addressed in Tier 1, Subsection 2.15.1.	See Tier 1 Subsection 2.15.1.	See Tier 1 Subsection 2.15.1
7. The FAPCS performs the following nonsafety-related functions: a. Suppression pool cooling mode	Perform a test to confirm the flow path between the FAPCS to the suppression pools.	Test report(s) document that the cooling flow path is demonstrated and confirmed by operation of the function. The flow rate is ≥ 545.1 m^3/hr (1998.42 gal/min).
b. Low-pressure coolant injection mode.	Perform a test to confirm the flow path from the FAPCS to the RWCU/SDC system.	Test report(s) document that the injection flow path is demonstrated and confirmed by operation of the function. The flowrate is ≥340 m^3/hr (1500 gpm) at a differential pressure of 1.03 MPa (150 psi).
c. External connection for emergency water to IC/PCC pool and Spent Fuel	Perform a test to confirm flow path and flow capacity from the Fire Protection	Test report(s) document that the makeup water flow path and flow capacity (see

Table 2.6.2-2

ITAAC For The Fuel and Auxiliary Pools Cooling Cleanup System

Design Commitment	Inspections, Tests, Analyses	Acceptance Criteria
Pool from the Fire Protection System and offsite water supplies	System and offsite water sources to the pools.	ITAAC Table 2.16.3-2, Item 7) are demonstrated and confirmed by operation of the function.
8. FAPCS minimum inventory of alarms, displays, and status indications in the main control room (MCR) are addressed in Section 3.3.	See Tier 1 Section 3.3.	See Tier 1 Section 3.3.
9. Level instruments with adequate operating ranges are provided for a. Spent Fuel Pool and, b. IC/PCC pools.	Inspections of the FAPCS will be conducted to verify that level instruments with adequate operating ranges are provided for the Spent Fuel Pool and IC/PCC pools.	Inspection report(s) document that the as-built FAPCS provides Spent Fuel Pool and IC/PCC pool level instrumentation with adequate operating ranges. a. Instruments for the SFP accurately indicate pool level over the range from normal water level to the top of the active fuel. b. Instruments for the IC/PCC pools accurately indicated pool level over the range normal water level to the midpoint of the IC heat exchanger tube.
10. Equipment qualification for the FAPCS is addressed in Tier 1 Section 3.8.	See Tier 1 Section 3.8.	See Tier 1 Section 3.8.

Table 2.6.2-2

ITAAC For The Fuel and Auxiliary Pools Cooling Cleanup System

Design Commitment	Inspections, Tests, Analyses	Acceptance Criteria
11. Following a loss of active cooling without makeup that persists for 72 hours, the water level in the Spent Fuel Pool remains above the top of active fuel.	Inspection of the Spent Fuel Pool as-built dimensions will be performed to determine the elevation of the pool weir relative to the bottom of the pool and the free volume between the top of the active fuel and the weir elevation.	A report or analysis exists and concludes that the elevation of the Spent Fuel Pool weir relative to the bottom of the pool is at least 14.35 m (47 ft)and that there is at least 1690 m^3 (59681 ft^3)of free volume above the top of the active fuel that can be filled with water.
12. Following a loss of active cooling without makeup that persists for 72 hours, the water level in the Buffer Pool remains above the top of active fuel.	Inspection of the Buffer Pool as-built dimensions will be performed to determine the elevation of the pool weir relative to the bottom of the pool and the free volume between the top of the active fuel and the weir elevation.	A report or analysis exists and concludes that the elevation of the Buffer Pool weir relative to the bottom of the pool is at least 6.7 m and that there is at least 288 m^3 of free volume above the top of the active fuel that can be filled with water.

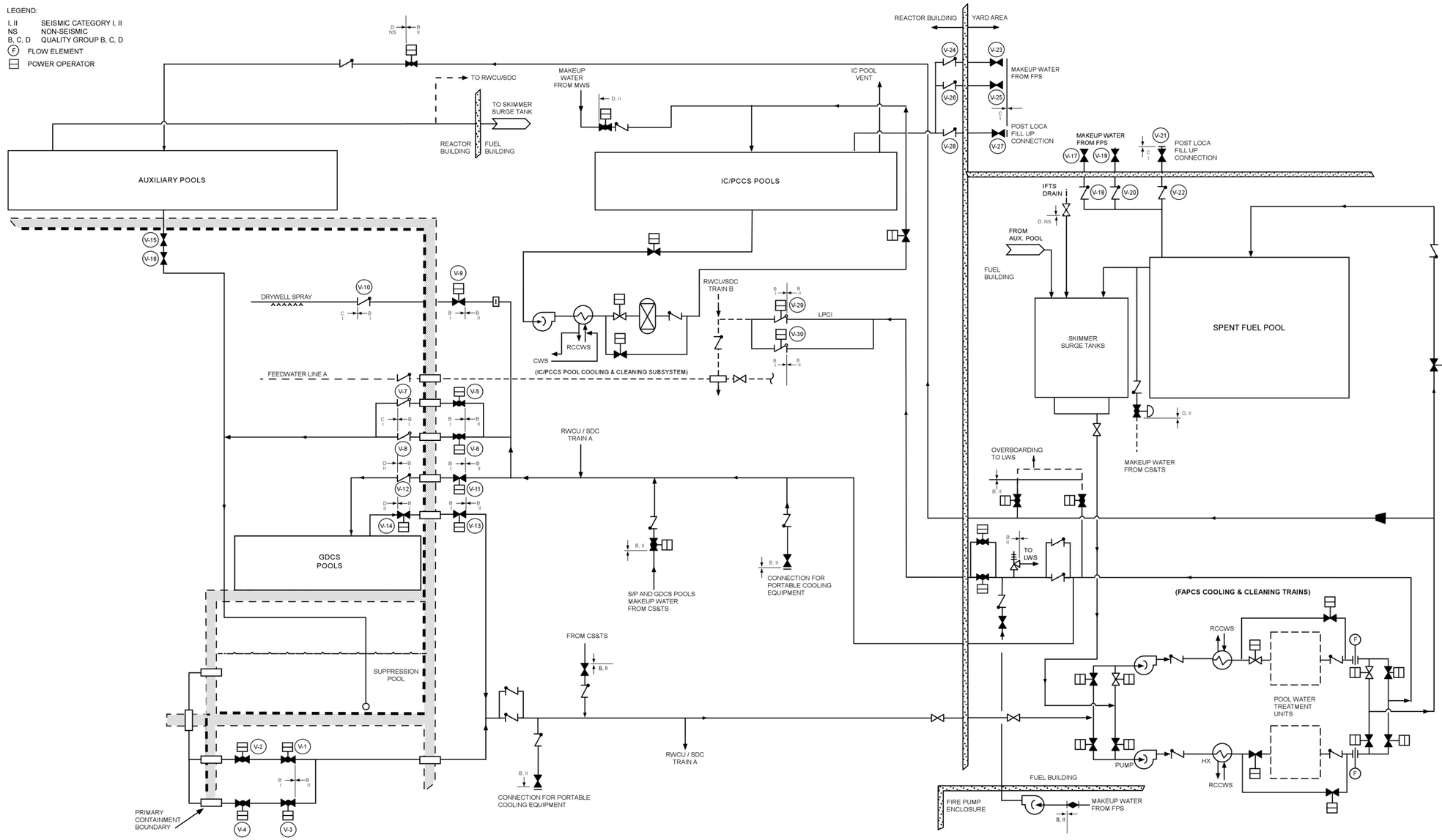

Figure 2.6.2-1. Fuel and Auxiliary Pools Cooling Cleanup System

2.7 CONTROL PANELS

The following subsections describe the different types of control panels and systems for the ESBWR.

2.7.1 Main Control Room Panels

Design Description

The main control room (MCR) is comprised of an integrated set of operator interface panels.

(1) The functional arrangement of the MCR Panels is as described in this Section 2.7.1.

(2) The safety-related MCR Panels

a. conform to seismic Category I requirements, and

b. are housed in a Seismic Category I structure.

(3) a. Independence is provided between safety-related divisions.

b. Separation is provided between safety-related divisions, and between safety-related divisions and nonsafety-related equipment.

(4) Human factors engineering principles are incorporated into all aspects of the MCR panel design.

(5) MCR Panel software is developed in accordance with the software development program described in Section 3.2.

Inspections, Tests, Analyses and Acceptance Criteria

Table 2.7.1-1 provides a definition of the inspections, tests and/or analyses, together with associated acceptance criteria for the MCRP.

Table 2.7.1-1

ITAAC For Main Control Room Panels

Design Commitment	Inspections, Tests, Analyses	Acceptance Criteria
1. The functional arrangement of the MCR Panels is as described in this Section 2.7.1.	Inspections of the as-built MCR Panels will be conducted.	Inspection report(s) document that the as-built MCR Panels conform with the functional arrangement as described in Section 2.7.1.
2. The safety-related MCR Panel a. conform to Seismic Category I requirements, and b. are housed in a seismic Category I structure.	i) Type tests and/or analyses of the safety-related MCR Panels will be performed. ii) Inspections of the as-built safety-related MCR Panels will be performed to verify that the equipment is installed in accordance with the configurations specified in the type tests and/or analyses. iii) Inspections of the as-built safety-related MCR Panels will be performed to verify that the equipment is housed in a seismic Category I structure.	i) A report exists and concludes that the safety-related MCR Panels conform to seismic Category I requirements. ii) Inspection report(s) document that the as-built safety-related MCR Panels are installed in accordance with the configurations specified by the type tests and/or analyses. iii) Inspection report(s) document that the as-built safety-related MCR Panels are housed in a seismic Category I structure.

Table 2.7.1-1

ITAAC For Main Control Room Panels

Design Commitment	Inspections, Tests, Analyses	Acceptance Criteria
3a. Independence is provided between safety-related divisions.	Tests will be performed on the as-built safety-related MCR Panels by providing a test signal in only one safety-related division at a time and checking for a test signal in all divisions.	Test report(s) document that a test signal exists only in the as-built safety-related division under test in the MCR Panels.
b. Separation or electrical isolation is provided between safety-related divisions, and between safety-related divisions and nonsafety-related equipment.	Inspection of the as-built safety-related MRC Panels will be performed.	Inspection report(s) document that, for the as-built safety-related MCR Panels, physical separation or electrical isolation exists between safety -related divisions. Physical separation or electrical isolation exists between safety-related divisions and nonsafety-related equipment.
4. Human factors engineering principles are incorporated into the MCR panel design	See Section 3.3.	See Section 3.3.
5. MCR Panel software is developed in accordance with the software development program described in Section 3.2.	See Section 3.2.	See Section 3.2.

2.7.2 Radioactive Waste Control Panels

No ITAAC are required for this system.

2.7.3 Local Control Panels And Racks

Design Description

Local Control Panels and Instrument Racks are provided as protective housings and/or support structures for electrical and electronic equipment to facilitate system operations at the local level. Because of the Reactor Protection System's fail-safe design, no potential sources of missiles or pipe breaks prevent modules from performing their safety-related reactor shutdown function.

(1) The functional arrangement of the Local Control Panels and Instrument Racks is as described in this Section 2.7.3.

(2) The safety-related Local Control Panels and Instrument Racks conform to seismic Category I requirements.

(3) a. Independence is provided between safety-related divisions.

b. Separation is provided between safety-related divisions, and between safety-related divisions and nonsafety-related equipment.

Inspections, Tests, Analyses and Acceptance Criteria

Table 2.7.3-1 provides a definition of the inspections, tests and/or analyses, together with associated acceptance criteria for the Local Control Panels and Instrument Racks.

Table 2.7.3-1

ITAAC For Local Control Panels and Instrument Racks

Design Commitment	Inspections, Tests, Analyses	Acceptance Criteria
1. The functional arrangement of the Local Control Panels and Instrument Racks is described in this Section 2.7.3.	Inspections of the as-built Local Control Panels and Instrument Racks will be conducted.	Inspection report(s) document that the as-built Local Control Panels and Instrument Racks conform with the functional arrangement as described in Section 2.7.3.
2. The safety-related Local Control Panels and Instrument Racks conform to Seismic Category I requirements.	i) Type tests and/or analyses of the safety-related Local Control Panels and Instrument Racks will be performed. ii) Inspections of the as-built safety-related Local Control Panels and Instrument Racks will be performed to verify that the equipment is installed in accordance with the configurations specified in the type tests and/or analyses.	i) A report exists and concludes that the safety-related Local Control Panels and Instrument Racks conform to seismic Category I requirements. ii) Inspection report(s) document that the as-built safety-related Local Control Panels and Instrument Racks are installed in accordance with the configurations specified by the type tests and/or analyses.

Table 2.7.3-1

ITAAC For Local Control Panels and Instrument Racks

Design Commitment	Inspections, Tests, Analyses	Acceptance Criteria
3a. Independence is provided between safety-related divisions.	Tests will be performed on the as-built safety-related Local Control Panels and Instrument Racks by providing a test signal in only one safety-related division at a time and checking for a test signal in all divisions.	Test report(s) document that a test signal exists only in the as-built safety-related division under test in the Local Control Panels and Instrument Racks.
b. Separation or electrical isolation is provided between safety-related divisions, and between safety-related divisions and nonsafety-related equipment.	Inspection of the as-built safety-related Local Control Panels and Instrument Racks will be performed.	Inspection report(s) document that, for the as-built safety-related Local Control Panels and Instrument Racks, physical separation or electrical isolation exists between safety -related divisions. Physical separation or electrical isolation exists between safety-related divisions and nonsafety-related equipment.

2.8 (DELETED)

2.8.1 (Deleted)

2.8.2 (DELETED

2.9 (DELETED)

2.10 RADIOACTIVE WASTE MANAGEMENT SYSTEM

2.10.1 Liquid Waste Management System

Design Description

The ESBWR Liquid Waste Management System (LWMS) is designed to control, collect, process, handle, store, monitor and dispose of liquid radioactive waste generated as the result of normal operation, including anticipated operational occurrences. The LWMS is designed to process liquid prior to release and ensure compliance with 10 CFR Part 20, Part B effluent concentration and dose limits, and Part 50, Appendix I dose objectives for liquid effluents when the plant is operational.

The LWMS does not perform any safety-related function, and is not required to achieve or maintain safe shutdown.

The functional arrangement of the LWMS is that it has components in four subsystems that receive and store radioactive or potentially radioactive liquid waste. The four LWMS subsystems are as follows:

- Equipment (low conductivity) drain subsystem;
- Floor (high conductivity) drain subsystem;
- Chemical drain subsystem; and
- Detergent drain subsystem.

Table 2.10.1-1 describes the major components in each of these four subsystems. Other components includes piping, pumps, and valves for transferring the process flow. The LWMS processing equipment is located in the Radwaste Building. The LWMS is operated and monitored from the Radwaste Building Control Room. Main control room alarms are provided for key parameters of the LWMS. The LWMS either returns processed water to the condensate system or discharges to the environment via the circulating water system.

(1) The LWMS functional arrangement is as described in Subsection 2.10.1 and Table 2.10.1-1.

(2) The LWMS piping systems retain their pressure boundary integrity under internal pressures that will be experienced during service.

(3) LWMS discharge flow is monitored for high radiation. A radiation monitor provides an automatic closure signal to the discharge line isolation valve. Discharge flow is terminated on receipt of a high radiation signal from this monitor.

(4) LWMS demineralizers have the filter efficiency and sufficient demineralizer media as specified in design specifications.

Inspections, Tests, Analyses and Acceptance Criteria

Table 2.10.1-2 provides a definition of the inspections, tests, and/or analyses, together with associated acceptance criteria for the Liquid Waste Management System. ITAAC, for the liquid radwaste discharge radiation monitor, and for part of the process radiation monitoring system, are also located in Table 2.3.1-2.

Table 2.10.1-1

Major Equipment in LWMS

Equipment	Number of Equipment Items
Equipment (Low Conductivity) Drain Subsystem	
Collection tanks	3
Collection tank cubicle steel liner	3 (one per cubicle)
Collection pumps	3
Process Subsystem: • Filtration system • Reverse osmosis • Mixed-bed ion exchanger • Piping • Instrumentation • Electrical System	1
Sample tanks	2
Sample tank cubicle steel liner	1 (one per cubicle)
Sample pumps	2
Floor (High Conductivity) Drain Subsystem	
Collection tanks	2
Collection tank cubicle steel liner	2 (one per cubicle)
Collection pumps	2
Process Subsystem • Filtration system • Reverse osmosis • Mixed-bed ion exchanger • Piping • Instrumentation • Electrical System	1
Sample tanks	2
Sample tank cubicle steel liner	1 (one per cubicle)
Sample pumps	2

Table 2.10.1-1

Major Equipment in LWMS

Equipment	Number of Equipment Items
Chemical Drain Subsystem	
Collection tank	1
Collection tank cubicle steel liner	1
Collection pump	2
Detergent Drain Subsystem	
Collection tanks	2
Collection tank cubicle steel liner	1 (one per cubicle)
Collection pumps	2
Process Subsystem: • Filtration system • Organic pre-treatment equipment • Piping • Instrumentation • Electric system	1
Sample tanks	2
Sample tank cubicle steel liner	1 (one per cubicle)
Sample pumps	2

Table 2.10.1-2

ITAAC For The Liquid Waste Management System

Design Commitment	Inspections, Tests, Analyses	Acceptance Criteria
1. The LWMS functional arrangement is as described in Subsection 2.10.1 and Table 2.10.1-1.	Inspections of the as-built system will be performed.	Reports document that the as-built LWMS conforms to the functional arrangement as described in the Design Description of this Subsection 2.10.1 and Table 2.10.1-1.
2. The LWMS piping systems retain their pressure boundary integrity under internal pressures that will be experienced during service.	A hydrostatic test in accordance with ASME/ANSI B31.3 will be conducted on the LWMS piping systems, except (1) at atmospheric tanks where no isolation valves exist, (2) when such testing would damage equipment, and (3) when such testing could seriously interfere with other systems or components required to be hydrostatically tested by the API or ASME Code per Regulatory guide 1.143, Revision 2.	Reports document that the results of the hydrostatic test of the LWMS piping systems in accordance with ASME/ANSI B31.3 conform with the requirements in the ASME Code per Regulatory Guide 1.143, Revision 2 and indicate no unacceptable pressure boundary leakage.
3. LWMS discharge flow is monitored for high radiation. A radiation monitor provides an automatic closure signal to the discharge line isolation valve . Discharge flow is terminated on receipt of a high radiation signal from this monitor.	Tests will be conducted using a standard radiation source or portable calibration unit that exceeds a setpoint value that is preset for the testing. Inspections will be conducted to confirm that the as-built indication, alarm, and automatic initiation functions are met.	Reports document that the LWMS discharge flow terminates upon receipt of a simulated high radiation signal and associated indication and alarm functions are met.
4. LWMS demineralizers have the filter efficiency and sufficient demineralizer media as specified in design specifications.	Inspections will be conducted to verify the amount of filtration and demineralization media is loaded in demineralizer vessels.	A report exists and concludes that the vendor specified filter efficiency and amount of demineralization media is loaded in the demineralizer vessels.

2.10.2 Solid Waste Management System

Design Description

The Solid Waste Management System (SWMS) has no safety-related functions. It is designed to control, collect, handle, process, package, and temporarily store wet and dry solid radioactive waste prior to shipment. This waste is generated as a result of normal operation and anticipated operational occurrences.

The functional arrangement of the SWMS is that the SWMS is located in the Radwaste Building. It consists of the following four subsystems:

- SWMS collection subsystem,
- SWMS processing subsystem,
- Dry solid waste accumulation and conditioning subsystem, and
- Container storage subsystem.

The SWMS also contains the tanks listed in Table 2.10.2-1.

(1) The SWMS functional arrangement is as described in the Design Description of this Subsection 2.10.2.

(2) The SWMS provides the nonsafety-related function of storing radioactive solids prior to processing for shipment.

Inspection, Tests, Analyses and Acceptance Criteria

Table 2.10.2-2 provides a definition of the inspections, tests, and/or analyses, together with associated acceptance criteria for the Solid Waste Management System.

Table 2.10.2-1

SWMS Tanks Nominal Capacity (Volume)

Equipment Description	Quantity	Nominal Capacity (Volume) Liter (Gal)
High Activity Resin Holdup Tank	1	70,000 (18,494)
Low Activity Resin Holdup Tank	1	70,000 (18,494)
Condensate Resin Holdup Tank	1	70,000 (18,494)
Phase Separator Tanks	2	55,000 (14,531)
Concentrated Waste Tank	1	60,000 (15,852)

Table 2.10.2-2

ITAAC For The Solid Waste Management System

Design Commitment	Inspections, Tests, Analyses	Acceptance Criteria
1. The SWMS functional arrangement is as described in the Design Description of this Subsection 2.10.2.	Inspection of the as-built system will be performed.	Reports document that the as-built SWMS conforms to the functional arrangement as described in the Design Description of this Subsection 2.10.2.
2. The SWMS provides the nonsafety-related function of storing radioactive solids prior to processing for shipment.	Inspection will be performed to verify the nominal volumes of each of the SWMS tanks.	Reports exist and conclude that the nominal volume of each of the SWMS tanks is the nominal value indicated on Table 2.10.2-1.

2.10.3 Gaseous Waste Management System

Design Description

The gaseous waste management system processes and controls the release of gaseous radioactive effluents to the environs. The Offgas System (OGS) is designed to process gaseous wastes and ensuring compliance with 10 CFR Part 20, Part B effluent concentration and dose limits, and Part 50, Appendix I dose objectives for gaseous effluents when the plant is operational. The OGS is the principal gaseous waste management subsystem. The various building HVAC systems perform other gaseous waste functions.

The functional arrangement of the OGS is that the process equipment is housed in a reinforced-concrete structure to provide adequate shielding. Charcoal absorbers are installed in a temperature monitored and controlled vault. The facility is located in the Turbine Building. The OGS provides for holdup, and thereby, decay of radioactive gases in the offgas from the main condenser air removal system and consists of process equipment along with monitoring instrumentation and control components. The OGS includes redundant hydrogen/oxygen catalytic recombiners and ambient temperature charcoal beds to provide for process gas volume reduction and radionuclide retention/decay. The OGS processes the main condenser air removal system discharge during plant startup and normal operation before discharging the air flow to the turbine building stack.

Control and monitoring of the OGS process equipment is performed both locally and remotely from the main control room.

(1) The OGS functional arrangement is as described in Subsection 2.10.3.

(2) The OGS is designed to withstand internal hydrogen explosions.

(3) Leakage from the process through purge or tap lines to external atmospheric pressure is sufficiently low so it is undetectable by “soap bubble” test.

(4) The OGS automatically controls the OGS flow bypassing or through the charcoal absorber beds depending on the radioactivity levels in the OGS process gas downstream of the charcoal beds. Normal operation of the OGS shall take place in the treat mode. The treat mode provides for an alignment to send process flow through one guard bed and all the remaining charcoal adsorbers.

(5) The OGS minimizes and controls the release of radioactive material into the atmosphere by delaying release of the offgas process stream initially containing radioactive isotopes of krypton, xenon, iodine, nitrogen, and oxygen. This delay, using activated charcoal adsorber beds, is sufficient to achieve adequate decay before the process offgas stream is discharged from the plant.

Inspections, Tests, Analyses and Acceptance Criteria

Table 2.10.3-1 provides a definition of the inspections, tests, and/or analyses, together with associated acceptance criteria for the Gaseous Waste Management System. ITAAC for the off-gas post-treatment radiation monitor, and for part of the process radiation monitoring system, are also located in Table 2.3.1-2.

Table 2.10.3-1

ITAAC For The Gaseous Waste Management System

Design Commitment	Inspections, Tests, Analyses	Acceptance Criteria
1. The OGS functional arrangement is as described in Subsection 2.10.3.	Inspections of the as-built OGS will be performed.	Reports document that the as-built OGS conforms to the functional arrangement as described the Design Description of this Section 2.10.3.
2. The OGS is designed to withstand internal hydrogen explosions.	A pressure test of the as-built OGS will be conducted in the plant in accordance ASME/ANSI B31.3 requirements.	Reports document that the OGS pressure testing results conform to the requirements in ASME/ANSI B31.3.
3. Leakage from the process through purge or tap lines to external atmospheric pressure is sufficiently low so it is undetectable by “soap bubble” test.	“Soap bubble” tests will be performed on the OGS mechanical joints on purge or tap lines at normal system operating pressure.	Reports document that the OGS “soap bubble” test results show no detectable leakage.

Table 2.10.3-1

ITAAC For The Gaseous Waste Management System

Design Commitment	Inspections, Tests, Analyses	Acceptance Criteria
4. The OGS automatically controls the OGS flow bypassing or through the charcoal adsorber beds depending on the radioactivity levels in the OGS process gas downstream of the Charcoal Beds. Normal operation of the OGS shall take place in the treat mode. The treat mode provides for an alignment to send process flow through one guard bed and all the remaining charcoal adsorbers.	Tests will be performed as follows: A standard raditation source or portable calibration unit that exceeds a setpoint value that is preset for the testing will provide.	Test reports document that:
	a. A simulated high charcoal gas discharge radioactivity signal that will give a Main Control Room (MCR) alarm.	a. Main Control Room alarm activates on a high OGS discharge radiation signal.
	b. A simulated high-high charcoal gas discharge radioactivity signal when the OGS process gas flow is bypassing the main charcoal beds and will give a MCR alarm and direct the gas flow through the charcoal beds.	b. The OGS charcoal bed valves operate to automatically align to process offgas flow through both the guard beds and all of the charcoal beds.
	c. A simulated OGS gas discharge radioactivity signal that closes the off-gas system discharge valve when the signal reaches a high-high-high level.	c. The OGS discharge valve closes on a high-high-high OGS discharge radioactivity signal.

Table 2.10.3-1

ITAAC For The Gaseous Waste Management System

Design Commitment	Inspections, Tests, Analyses	Acceptance Criteria
5. The OGS minimizes and controls the release of radioactive material into the atmosphere by delaying release of the offgas process stream initially containing radioactive isotopes of krypton, xenon, iodine, nitrogen, and oxygen. This delay, using activated charcoal adsorber beds, is sufficient to achieve adequate decay before the process offgas stream is discharged from the plant.	Inspections will be performed to verify the mass of charcoal loaded in the Charcoal Guard Bed and Charcoal Decay Bed.	Test reports document minimum mass of: 33,000 pounds in the Charcoal Guard Bed and 490,000 pounds in the Charcoal Decay Bed.

2.11 POWER CYCLE

The following subsections describe the major power cycle (i.e., generation) systems for the ESBWR.

2.11.1 Turbine Main Steam System

Design Description

The Turbine Main Steam System (TMSS) supplies steam generated in the reactor to the Turbine Generator, moisture separator reheaters, steam auxiliaries and turbine bypass system. The TMSS does not include the seismic interface restraint, main turbine stop valves or bypass valves.

The TMSS consists of four lines from the seismic interface restraint to the main turbine stop valves. The TMSS is nonsafety-related. Regulatory Guide 1.26 Quality Group B portions of the TMSS are designed in accordance with ASME Boiler and Pressure Vessel Code, Section III, Class 2 requirements. The TMSS is located in the Reactor Building steam tunnel and Turbine Building.

(1) The TMSS functional arrangement is as described in Subsection 2.11.1.

(2) The ASME Code Section III components of the TMSS retain their pressure boundary integrity at their design pressure.

(3) Upon receipt of an MSIV closure signal, the Steam Auxiliary Isolation Valve(s) close(s)and required MSIV fission product leakage path TMSS drain valve(s) open(s).

(4) The Steam Auxiliary Isolation Valve(s) fail(s) closed and required MSIV fission product leakage path TMSS drain valve(s) fail(s) open on loss of electrical power to the valve actuating solenoid or on loss of pneumatic pressure.

(5) TMSS piping, which consists of the piping (including supports) for the MSL from the seismic interface restraint (or seismic guide) to the turbine stop valves (non-inclusive), turbine bypass valves (non-inclusive) and the connecting branch lines 6.35 cm. (2.5 in.) and larger up to and including the first isolation valve which is either normally closed or capable of automatic closure during all modes of normal reactor operation, is classified as Seismic Category II.

(6) The integrity of the as-built MSIV leakage path to the condenser (main steam piping, bypass piping, required drain piping, and main condenser) is not compromised by non-seismically designed systems, structures and components.

(7) The non-seismic portion of the MSIV leakage path to the condenser (main steam piping from the stop valve (inclusive) to turbine nozzle, bypass piping, required drain piping, and main condenser) maintains structural integrity under SSE loading conditions.

(8) The TMSS piping is sized to ensure that reactor pressure vessel (RPV) dome to turbine stop valve pressure drop, total main steam system volume, and steamline length are consistent with assumptions in Abnormal Event analyses.

(9) a1. The TMSS piping portion designated as ASME Code Section III is designed in accordance with ASME Code Section III requirements and seismic Category I requirements.

a2. The as-built TMSS piping portion designated as ASME Code Section III shall be reconciled with the with piping design requirements.

a3. The TMSS piping portion designated as ASME Code Section III is fabricated, installed, and inspected in accordance with ASME Code Section III requirements..

(10) TMSS Pressure Boundary Welds

a. Pressure boundary welds in the ASME Code Section III components of TMSS meet ASME Code Section III requirements.

b. Pressure boundary welds in the ASME Code Section III piping of the TMSS meet the ASME Code Section III requirements.

Inspections, Tests, Analyses and Acceptance Criteria

Table 2.11.1-1 provides a definition of the inspections, tests, and/or analyses, together with associated acceptance criteria for the TMSS.

Table 2.11.1-1

Turbine Main Steam System ITAAC

Design Commitment	Inspections, Tests, Analyses	Acceptance Criteria
1. The TMSS functional arrangement is as described in Subsection 2.11.1.	Inspections of the as-built system will be conducted.	A report exists and concludes that the as-built TMSS conforms to the functional arrangement description in Subsection 2.11.1.
2. The ASME Code Section III components of the TMSS retain their pressure boundary integrity at their design pressure.	A hydrostatic test will be conducted on those ASME Code components of the TMSS that are required to be hydrostatically tested by the ASME Code Section III.	An ASME Code report exists and concludes that the results of the hydrostatic test of the ASME Code components of the TMSS comply with the requirements of the ASME Code Section III.
3. Upon receipt of an MSIV closure signal, the Steam Auxiliary Isolation Valve(s) close(s) and required MSIV fission product leakage path TMSS drain valve(s) open(s).	Tests will be performed on the Steam Auxiliary Isolation Valves(s) and required MSIV fission product leakage path TMSS drain valve(s) using simulated MSIV closure signals.	A test report exists and concludes that the Steam Auxiliary Isolation Valve(s) close(s) and required MSIV fission product leakage path TMSS drain valve(s) open(s) following receipt of a simulated MSIV closure signal.
4. The Steam Auxiliary Isolation Valve(s) fail(s) closed and required MSIV fission product leakage path TMSS drain valve(s) fail(s) open on loss of electrical power to the valve actuating solenoid or on loss of pneumatic pressure.	A functional test will be performed on Steam Auxiliary Isolation Valve(s) and required MSIV fission product leakage path TMSS drain valve(s).	A test report exists and concludes that the Steam Auxiliary Isolation Valve(s) fail(s) closed and required MSIV fission product leakage path TMSS drain valve(s) fail(s) open on loss of electrical power to the valve actuating solenoid or on loss of pneumatic pressure.

Table 2.11.1-1

Turbine Main Steam System ITAAC

Design Commitment	Inspections, Tests, Analyses	Acceptance Criteria
5. TMSS piping, which consists of the piping (including supports) for the MSL from the seismic interface restraint (or seismic guide) to the turbine stop valves (non-inclusive), turbine bypass valves (non-inclusive) and the connecting branch lines 6.35 cm. (2.5 in.) and larger up to and including the first isolation valve which is either normally closed or capable of automatic closure during all modes of normal reactor operation, is classified as Seismic Category II.	An inspection will be performed to verify that a seismic analysis has been completed for the as-built TMSS piping.	A report exists and concludes that the as-built TMSS piping, which consists of the piping (including supports) for the MSL from the seismic interface restraint (or seismic guide) to the turbine stop valves (non-inclusive), turbine bypass valves (non-inclusive) and the connecting branch lines 6.35 cm. (2.5 in.) and larger up to and including the first isolation valve which is either normally closed or capable of automatic closure during all modes of normal reactor operation, meets Seismic Category II requirements.
6. The integrity of the as-built MSIV leakage path to the condenser (main steam piping, bypass piping, required drain piping, and main condenser) is not compromised by non-seismically designed systems, structures and components.	Inspections of non-seismically designed systems, structures and components overhead, adjacent to, and attached to the MSIV leakage path (i.e., the main steam piping, bypass piping, required drain piping and main condenser) will be performed.	A report exists and concludes that the non-seismically designed systems, structures and components overhead, adjacent to, and attached to the MSIV leakage path to the condenser will not compromise the integrity of the main steam piping, bypass piping, required drain piping and main condenser.

Table 2.11.1-1

Turbine Main Steam System ITAAC

Design Commitment	Inspections, Tests, Analyses	Acceptance Criteria
7. The non-seismic portion of the MSIV leakage path to the condenser (main steam piping from the stop valve (inclusive) to turbine nozzle, bypass piping, required drain piping, and main condenser) maintains structural integrity under SSE loading conditions	An analysis of the as-built non-seismic portion of the MSIV leakage path to the condenser will be performed to verify that it maintains structural integrity under SSE loading conditions.	A report exists and demonstrates that the as-built non-seismic portion of the MSIV leakage path to the condenser (main steam piping from the stop valve (inclusive) to turbine nozzle, bypass piping, required drain piping, and main condenser) maintains structural integrity under SSE loading conditions.
8. The TMSS piping is sized to ensure that RPV dome to turbine stop valve pressure drop, total main steam system volume, and steamline length are consistent with assumptions in Abnormal Event analyses.	Inspection and analysis of the as-built TMSS piping will be performed to confirm RPV to turbine calculated pressure drop, total main steam system volume, and steamline length are consistent with assumptions in Abnormal Events analyses..	A report exists and concludes that the TMSS piping is sized to be consistent with these Abnormal Events analyses inputs: a. Minimum Steamline Pressure Drop from RPV Dome to Turbine Throttle at rated conditions: 0.179 MPa (26 psi) b. Minimum Main Steam System Volume: 103.3 m^3 (3648 ft^3) c. Minimum Steamline Length: 65.26 m (214.1 ft)

Table 2.11.1-1

Turbine Main Steam System ITAAC

Design Commitment	Inspections, Tests, Analyses	Acceptance Criteria
9. a1. The TMSS piping portion designated as ASME Code Section III is designed in accordance with ASME Code Section III requirements and seismic Category I requirements.	Inspection of ASME Code certified Design Reports (NCA-3550) and required documents will be conducted. {{Design Acceptance Criteria}}	ASME Code certified Design Reports (NCA-3550) (certified, when required by ASME Code) conclude that the design of the TMSS piping portion designated as ASME Code Section III complies with the requirements of the ASME Code, Section III, including for those stresses and loads related to fatigue (including environmental effects), thermal expansion, seismic, and combined. {{Design Acceptance Criteria}}
a2. The as-built TMSS piping portion designated as ASME Code Section III shall be reconciled with the with the piping design requirements.	A reconciliation analysis of the piping using the as-designed and as-built information and ASME Code certified Design Reports (NCA-3550) will be performed.	An ASME Code Design Report (certified, when required by ASME Code) exists and concludes that design reconciliation has been completed in accordance with the ASME Code for as-built reconciliation of the TMSS piping portion designated as ASME Code Section III. The report documents the results of the reconciliation analysis.

Table 2.11.1-1

Turbine Main Steam System ITAAC

Design Commitment	Inspections, Tests, Analyses	Acceptance Criteria
a3. The TMSS piping portion designated as ASME Code Section III is fabricated, installed, and inspected in accordance with ASME Code Section III requirements.	Inspections of the piping will be conducted.	ASME Code Data Reports (certified, when required by ASME Code) and inspection reports (including N-5 Data Reports where applicable) document that the TMSS piping portion designated as ASME Code Section III is fabricated, installed, and inspected in accordance with ASME Code Section III requirements.
10. TMSS Pressure Boundary Welds a. Pressure boundary welds in the ASME Code Section III components of TMSS meet ASME Code Section III requirements. b. Pressure boundary welds in the ASME Code Section III piping of the TMSS meet the ASME Code Section III requirements.	Inspection of the as-built pressure boundary welds will be performed in accordance with the ASME Code Section III. Inspection of the as-built pressure boundary welds will be performed in accordance with the ASME Code Section III.	a. An ASME Code Report exists and concludes that the ASME Code Section III requirements are met for non-destructive examination of pressure boundary welds in the TMSS. b. An ASME Code Report exists and concludes that the ASME Code Section III requirements are met for non-destructive examination of pressure boundary welds in the TMSS.

2.11.2 Condensate and Feedwater System

Design Description

The function of the Condensate and Feedwater System (C&FS) is to receive condensate from the condenser hotwells, supply condensate to the Condensate Purification System (CPS), and deliver feedwater to the reactor. The C&FS is classified as nonsafety-related.

Condensate is pumped from the main condenser hotwell(s) by the condensate pumps, passes through the CPS, auxiliary condenser/coolers, low-pressure feedwater heaters and into the feedwater tank. The feedwater booster pumps take suction from the open feedwater tank and provide adequate suction head for the reactor FW pumps, which pump feedwater through the high-pressure feedwater heaters to the reactor. The C&FS boundaries extend from the main condenser outlet to (but not including) the seismic interface restraint outside containment. The C&FS is located in the Reactor Building steam tunnel and Turbine Building.

(1) The functional arrangement for the C&FS is as described in Subsection 2.11.2.

(2) The C&FS provides sufficient feedwater flow and volume to mitigate Abnormal Events.

(3) The C&FS limits maximum feedwater flow to mitigate Abnormal Events.

(4) The C&FS, in conjunction with the feedwater control system, provides sufficient feedwater flow after MSIV isolation to mitigate Abnormal Events.

(5) The C&FS, in conjunction with the feedwater control system, limits the maximum feedwater flow for a single pump following a single active component failure or operator error to mitigate Abnormal Events.

(6) The C&FS, in conjunction with the feedwater control system, is designed so that the loss of feedwater heating is limited in the event of a single operator error or equipment failure.

(7) The C&FS, in conjunction with other Power Cycle Systems, provides a nominal full load final feedwater temperature that is consistent with assumptions in Abnormal Event analyses.

(8) The C&FS has a nominal feedwater flow rate at rated conditions that is consistent with inputs and assumptions in Abnormal Event analyses.

Inspections, Tests, Analyses and Acceptance Criteria

Table 2.11.2-1 provides a definition of the inspections, tests, and/or analyses, together with associated acceptance criteria for the Condensate and Feedwater System.

Table 2.11.2-1

Condensate and Feedwater System ITAAC

Design Commitment	Inspections, Tests, Analyses	Acceptance Criteria
1. The C&FS functional arrangement is as described in Subsection 2.11.2.	Inspections of the as-built system will be conducted to confirm the functional arrangement.	A report exists and documents that the as-built C&FS conforms to the functional arrangement described in Subsection 2.11.2
2. The C&FS provides sufficient feedwater flow and volume to mitigate Abnormal Events.	An analysis and/or type testing of the as-built C&FS and feedwater pumps will be performed to confirm the minimum capacity of three feedwater pumps.	A report exists and concludes that three operating feedwater pumps are capable of supplying 135% of the rated feedwater flow at 7.34 MPa gauge (1065 psig).
3. The C&FS limits maximum feedwater flow to mitigate Abnormal Events.	Analysis and/or type testing of the as-built C&FS and feedwater pumps will be performed to confirm that the C&FS limits maximum feedwater flow.	A report exists and concludes that the maximum capacity of three feedwater pumps at 7.34 MPa gauge (1065 psig) is less than or equal to 155% of rated feedwater flow.
4. The C&FS, in conjunction with the feedwater control system, provides sufficient feedwater flow after MSIV isolation to mitigate Abnormal Events.	Inspection and/or analysis of the as-built feedwater system will be performed to confirm that the C&FS provides sufficient feedwater flow after MSIV isolation.	A report exists and concludes that the C&FS, in conjunction with the feedwater control system, provides feedwater flow greater than or equal to 240 seconds of rated feedwater flow after MSIV isolation.

Table 2.11.2-1

Condensate and Feedwater System ITAAC

Design Commitment	Inspections, Tests, Analyses	Acceptance Criteria
5. The C&FS, in conjunction with the feedwater control system, limits the maximum feedwater flow for a single pump following a single active component failure or operator error to mitigate Abnormal Events.	Testing and/or analysis of the as-built C&FS and feedwater pumps and/or type testing of a single feedwater pump will be performed to confirm that the C&FS limits the maximum feedwater flow from a single pump.	A report exists and concludes that the C&FS, in conjunction with the feedwater control system, limits the maximum feedwater flow for a single pump to 75% of rated flow following a single active component failure or operator error.
6. The C&FS, in conjunction with the feedwater control system, is designed so that the loss of feedwater heating is limited in the event of a single operator error or equipment failure.	Inspection and/or analysis of the as-built feedwater system will be performed to confirm that the C&FS, in conjunction with the feedwater control system, limits the loss of feedwater heating in the event of a single operator error or equipment failure.	A report exists and documents that the C&FS, in conjunction with the feedwater control system, is designed so that the loss of feedwater heating is limited to a final feedwater temperature reduction less than or equal to 55.6°C (100°F)in the event of a single operator error or equipment failure.
7. The C&FS, in conjunction with other Power Cycle Systems, provides a nominal full load final feedwater temperature that is consistent with assumptions in Abnormal Event analyses.	Inspection and/or analysis of the as-built feedwater system and other Power Cycle Systems will be performed to confirm the nominal full load final feedwater temperature.	A report exists and concludes that the C&FS, in conjunction with other Power Cycle Systems, provides a nominal full load final feedwater temperature of 216°C (420°F).
8. The C&FS has a nominal feedwater flow rate at rated conditions that is consistent with inputs and assumptions in Abnormal Event analyses.	Testing and/or analysis of the as-built C&FS and feedwater pumps and/or type testing of a single feedwater pump will be performed to confirm the nominal feedwater flow rate at rated conditions.	A report exists and concludes that the C&FS has a nominal feedwater flow rate at rated conditions of 2.43×10^3 kg/s (19.3×10^6 lbm/hr).

2.11.3 Condensate Purification System

No ITAAC are required for this system.

2.11.4 Main Turbine System

Design Description

The Main Turbine System (MT) is nonsafety-related. The ESBWR standard plant design has a favorably oriented turbine to minimize any potential impact on safety-related structures and equipment.

(1) The physical layout of the MT system assures that protection is provided to essential systems and components, as required, from the effects of high and moderate energy MT system piping failures or failure of the connection(s) from the low pressure turbine exhaust hood(s) to the condenser. Essential systems and components are defined in BTP SPLB 3-1 as systems and components required to shut down the reactor and mitigate the consequences of a postulated piping failure, without offsite power.

(2) The MT has a favorable orientation to minimize the potential effects of turbine missiles on safety-related structures, systems and components (SSCs). The safety-related SSCs that are located within the low-trajectory turbine missile strike zone are failsafe in design.

(3) The MT control valve closing times are limited to mitigate Abnormal Events.

(4) The MT stop valve closing times are limited to mitigate Abnormal Events.

(5) The MT can accommodate sufficient steam flow through three control valves to mitigate Abnormal Events.

(6) The probability of a strike by a turbine missle is sufficiently low to prevent equipment damage to essential systems.

(7) The as-built turbine material properties, turbine rotor and blade designs, pre-service inspection and testing results and in-service testing and inspection requirements meet the requirements defined in the Turbine Missile Probability Analysis.

Inspections, Tests, Analyses and Acceptance Criteria

Table 2.11.4-1 provides a definition of the inspections, tests, and/or analyses, together with associated acceptance criteria for the Main Turbine.

Table 2.11.4-1

ITAAC For The Main Turbine System

Design Commitment	Inspections, Tests, Analyses	Acceptance Criteria
1. The physical layout of the MT system assures that protection is provided to essential systems and components from the effects of high and moderate energy MT system piping failures or failure of the connection(s) from the low pressure turbine exhaust hood(s) to the condenser. Essential systems and components are defined in BTP SPLB 3-1 as systems and components required to shut down the reactor and mitigate the consequences of a postulated piping failure, without offsite power.	Inspections of the as-built Turbine Building and plant arrangements will be conducted.	An inspection report exists and concludes that the physical layout of the MT system protects essential systems and components from the effects of high and moderate energy MT system piping failures or failure of the connection(s) from the low pressure turbine exhaust hood to the condenser. Essential systems and components are defined in BTP SPLB 3-1 as systems and components required to shut down the reactor and mitigate the consequences of a postulated piping failure, without offsite power.
2. The MT has a favorable orientation to minimize the potential effects of turbine missiles on safety-related structures systems and components (SSCs). The safety-related SSCs that are located within the low-trajectory turbine missile strike zone are failsafe in design.	Inspections will be performed to verify the orientation of the MT, and that any safety-related SSCs within the low-trajectory turbine missile strike zone are failsafe in design.	An inspection report exists and concludes that the MT has a favorable orientation to minimize the potential effects of turbine missiles on safety-related SSCs, and that any safety-related SSCs within the low-trajectory turbine missile strike zone are failsafe in design.

Table 2.11.4-1

ITAAC For The Main Turbine System

Design Commitment	Inspections, Tests, Analyses	Acceptance Criteria
3. The MT control valve closing times are limited to mitigate Abnormal Events.	Testing and/or analysis of the as-built MT and/or type testing of a single turbine control valve will be performed to confirm control valve closing times.	A report exists and documents that the MT control valve fast closing time characteristic is limited to a minimum greater than or equal to the equivalent of 0.08 seconds at 100% NBR. The servo closing time is limited to a minimum greater than or equal to 2.5 seconds.
4. The MT stop valve closing times are limited to mitigate Abnormal Events.	Testing and/or analysis of the as-built MT and/or type testing of a single turbine stop valve will be performed to confirm stop valve closing time.	A report exists and documents that the MT stop valve closing time is limited to a minimum greater than or equal to 0.100 seconds.
5. The MT can accommodate sufficient steam flow through three control valves to mitigate Abnormal Events.	An inspection of the analysis of the as-built MT will be performed to confirm that the MT can accommodate sufficient steam flow through three control valves.	A report exists and concludes that the MT can accommodate a flow greater than or equal to 85% of rated steam flow through three control valves.
6. The probability of a strike by a turbine missle is sufficiently low to prevent equipment damage to essential systems.	A turbine missile probability analysis will be performed to demonstrate the probability of turbine failure resulting in the ejection of turbine rotor (or internal structure) fragments through the turbine casing is less than the regulatory limiting value.	A Turbine Missile Probability Analysis Report exists and documents that the probability of turbine failure resulting in the ejection of turbine rotor (or internal structure) fragments through the turbine casing is less than $1x10^{-4}$ per year.

Table 2.11.4-1

ITAAC For The Main Turbine System

Design Commitment	Inspections, Tests, Analyses	Acceptance Criteria
7. The as-built turbine material properties, turbine rotor and blade designs, pre-service inspection and testing results, and in-service testing and inspection requirements meet the requirements defined in the Turbine Missile Probability Analysis.	An inspection of the as-built turbine material properties, turbine rotor and blade designs, pre-service inspection and testing results, and in-service testing and inspection requirements will be conducted.	Report(s) document that as-built turbine material properties, turbine rotor and blade designs, pre-service inspection and testing results, and in-service inspection and testing requirements meet the requirements of the Turbine Missile Probability Analysis.

2.11.5 Turbine Gland Seal System

Design Description

The Turbine Gland Seal System (TGSS) minimizes the escape of radioactive steam from the turbine shaft/casing penetrations and valve stems.

(1) The TGSS functional arrangement is described in Subsection 2.11.5 and shown in Figure 2.11.5-1.

Inspections, Tests, Analyses and Acceptance Criteria

Table 2.11.5-1 provides a definition of the inspections, tests, and/or analyses, together with associated acceptance criteria for the TGSS.

Table 2.11.5-1

Turbine Gland Seal System ITAAC

Design Commitment	Inspections, Tests, Analyses	Acceptance Criteria
1. The TGSS functional arrangement is described in Subsection 2.11.5 and shown in Figure 2.11.5-1.	Inspections of the as-built system will be performed.	A report exists and documents that the as-built TGSS conforms to the functional arrangement as described in Subsection 2.11.5 and as shown on Figure 2.11.5-1.

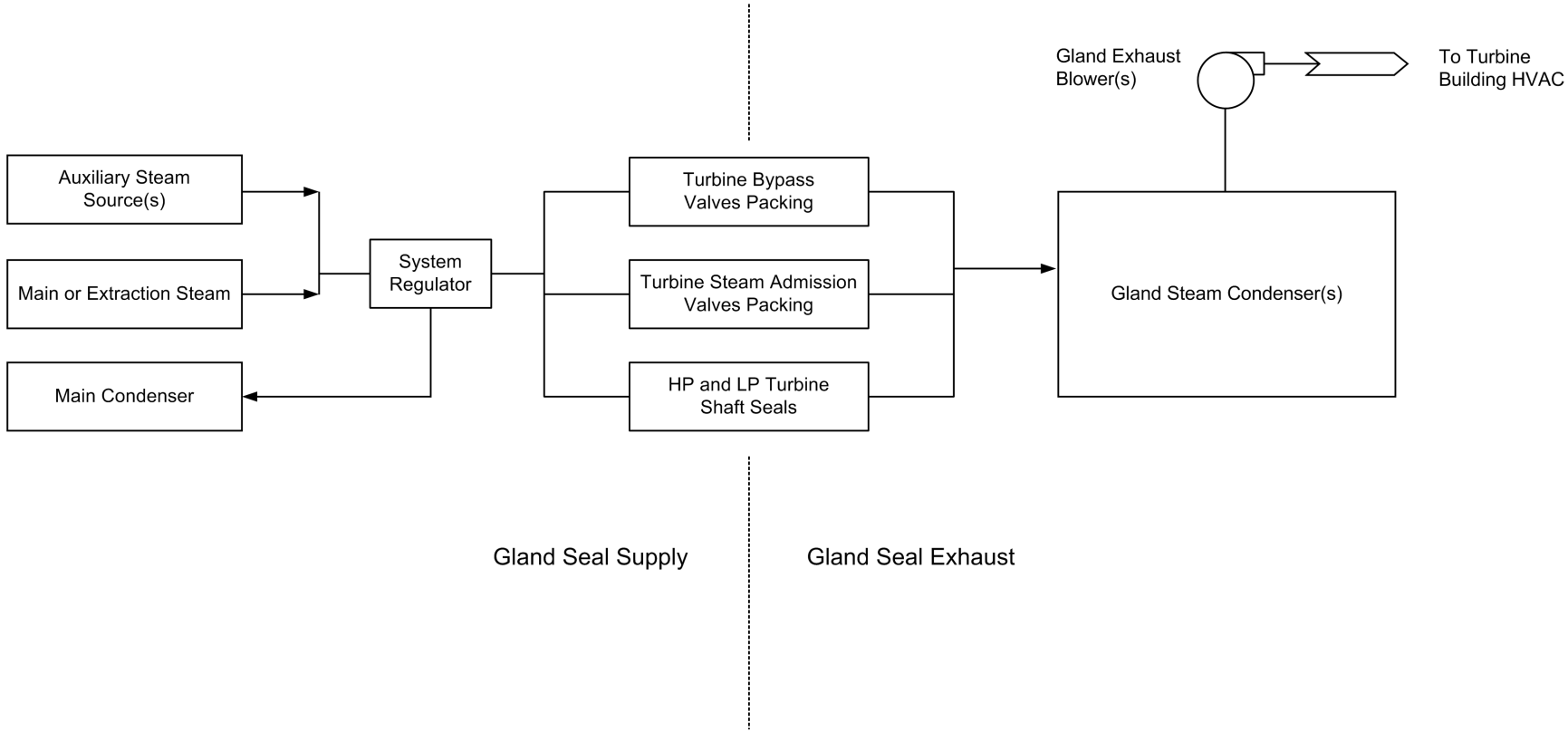

Figure 2.11.5-1. Turbine Gland Seal System Arrangement

2.11.6 Turbine Bypass System

Design Description

The Turbine Bypass System (TBS) consists of hydraulically operated Turbine Bypass Valves (TBVs) that are connected to the main steam header via Turbine Main Stream System (TMSS) piping. The TBS also includes the piping down stream of the TBVs to the main condenser. The TBS passes steam to the main condenser in conjunction with the TMSS under the control of the Steam Bypass and Pressure Control (SB&PC) system. The TBS is classified as nonsafety-related. The TBS is used to mitigate abnormal events. The TBS is located in the Turbine Building.

(1) The TBS functional arrangement is as described in Subsection 2.11.6.

(2) The TBVs are controlled by the SB&PC System.

(3) The TBS steam pressure retaining and structural components are analyzed to demonstrate structural integrity under SSE loading conditions.

(4) The TBS accommodates steam flow to mitigate Abnormal Events.

(5) The TBS maintains sufficient capacity to mitigate Abnormal Events with a single active failure.

(6) The TBS design limits the capacity of individual TBVs.

(7) The TBS design allows the TBVs to open rapidly to support Abnormal Event mitigation.

Inspections, Tests, Analyses and Acceptance Criteria

Table 2.11.6-1 provides a definition of the inspections, tests, and/or analyses, together with associated acceptance criteria for the TBS.

Table 2.11.6-1

ITAAC For The Turbine Bypass System

Design Commitment	Inspections, Tests, Analyses	Acceptance Criteria
1. The TBS functional arrangement is as described in Subsection 2.11.6.	Inspections of the as-built TBS will be conducted.	A report exists and concludes that the as-built TBS conforms to the functional arrangement described in Subsection 2.11.6.
2. The TBVs are controlled by the SB&PC System.	Tests will be conducted using a simulated signal.	A test report exists and concludes that the TBVs operate upon receipt of a simulated signal from the SB&PC System.
3. The TBS steam pressure retaining and structural components are analyzed to demonstrate structural integrity under SSE loading conditions.	An inspection of the as-built TBS will be performed to verify that it conforms with the seismic analysis.	An inspection report exists and concludes that the as-built TBS can withstand a SSE without loss of structural integrity.
4. The TBS accommodates steam flow to mitigate Abnormal Events.	An inspection will be performed to confirm that the as-built TBS accommodates steam flow to mitigate Abnormal Events.	An inspection report exists and concludes that the TBS accommodates at least 110% of rated main steam flow.
5. The TBS maintains sufficient capacity to mitigate Abnormal Events with a single active failure.	An inspection will be performed to confirm that the as-built TBS maintains sufficient capacity to mitigate Abnormal Events with a single active failure.	An inspection report exists and concludes that the TBS maintains capacity greater than or equal to 50% of the maximum capacity for a period greater than or equal to 6 seconds with a single active failure.
6. The TBS design limits the capacity of individual TBVs.	A design analysis of the TBS will be performed to confirm that the TBS design limits the capacity of individual TBVs.	An analysis report and test data exist and concludes that no single TBV has a capacity greater than 15% of rated steam flow.

Table 2.11.6-1

ITAAC For The Turbine Bypass System

Design Commitment	Inspections, Tests, Analyses	Acceptance Criteria
7. The TBS design allows the TBVs to open rapidly to support Abnormal Event mitigation.	Testing and/or analyses of the TBS will be performed to confirm that the as-built TBS design allows the TBVs to open rapidly to support Abnormal Event mitigation.	A test and/or analysis report exists and concludes that the TBS can achieve a flow greater than or equal to 80% of total bypass capacity in a time period less than or equal to 0.17 seconds after initiation of TBV fast opening function.

2.11.7 Main Condenser

Design Description

The Main Condenser (MC) is classified as nonsafety-related. The MC shell provides a hold-up volume for Main Steam Isolation Valve (MSIV) fission product leakage and accommodates the TBS steam flow to mitigate Abnormal Events.

(1) The MC structural members, supports, and anchors are designed to maintain condenser integrity following a safe shutdown earthquake (SSE).

(2) The MC can accommodate TBS steam flow to mitigate Abnormal Events.

(3) The actual volume and plate out areas is greater than that assumed in Design Basis dose calculations.

Safety-related condenser pressure instruments are described in Tier 1, Section 2.2.7. Main Condenser Evacuation System (MCES) effluent radiation monitoring is described in Tier 1, Subsection 2.3.1.

Inspections, Tests, Analyses and Acceptance Criteria

Table 2.11.7-1 provides a definition of the inspections, tests, and/or analyses, together with associated acceptance criteria for the Main Condenser.

Table 2.11.7-1

ITAAC For The Main Condenser

Design Commitment	Inspections, Tests, Analyses	Acceptance Criteria
1. The MC structural members, supports, and anchors are designed to maintain condenser integrity following a safe shutdown earthquake (SSE).	An inspection will be performed to verify the ability of the as-built main condenser structural members, supports, and anchors to maintain condenser integrity following a safe shutdown earthquake.	An inspection report exists and confirms that the as-built main condenser structural members, supports, and anchors are able to maintain condenser integrity following a safe shutdown earthquake.
2. The MC can accommodate TBS steam flow to mitigate Abnormal Events.	An inspection of the as-built condenser will be performed to confirm the capability of the as-built condenser to accommodate TBS steam flow to mitigate Abnormal Events.	An inspection report exists and confirms that the as-built main condenser has the capability to accommodate TBS steam flow for at least 6 seconds following a loss of preferred power without the main condenser pressure exceeding the TBV isolation setpoint.
3. The actual volume and plate out areas is greater than that assumed in Design Basis dose calculations.	The volume and plate out areas in the condenser final design shall be verified by inspection and/or analysis.	Report exists and confirms that the as-built condenser exceeds the following parameters assumed in analyses: a. Condenser volume of ≥5.93E+3 m^3 (2.09E+5 ft^3) b. Condenser horizontal plate area of 418 m^2 (4500 ft^2); and c. Condenser horizontal cylinder area ≥2793 m^2 (30060 ft^2)

2.11.8 Circulating Water System

No ITAAC are required for this system.

2.11.9 Power Cycle Auxiliary Systems

Design Description

The Power Cycle includes a number of auxiliary systems. The Power Cycle Auxiliary Systems include the Heater Drain and Vent System, Turbine Generator Control System, Turbine Lubricating Oil System, Moisture Separator Reheater System, Extraction System, Turbine Hydraulics System, Turbine Auxiliary Steam System, Generator System, Hydrogen Gas Control System, Stator Cooling Water System, Generator Lubricating and Seal Oil System, Hydrogen and Carbon Dioxide Bulk Storage System, and Generator Excitation System.

No ITAAC are required for this system.

2.12 AUXILIARY SYSTEMS

The following subsections describe the auxiliary systems for the ESBWR.

2.12.1 Makeup Water System

Design Description

The Makeup Water System (MWS) is a nonsafety-related system, and has no safety design basis other than provision for safety-related containment penetrations and isolation valves.

(1) The MWS has safety-related containment penetrations and isolation valves.

Inspections, Tests, Analyses and Acceptance Criteria

Table 2.12.1-1 provides a definition of the inspections, tests, and/or analyses, together with associated acceptance criteria for the MWS.

Table 2.12.1-1

ITAAC For The Makeup Water System

Design Commitment	Inspections, Tests, Analyses	Acceptance Criteria
1. The MWS has safety-related containment penetrations and isolation valves.	See Tier 1, Subsection 2.15.1.	See Tier 1, Subsection 2.15.1.

2.12.2 Condensate Storage and Transfer System

No ITAAC are required for this system.

2.12.3 Reactor Component Cooling Water System

Design Description

The Reactor Component Cooling Water System (RCCWS) does not perform any safety-related function. Therefore, the RCCWS has no safety design basis. The RCCWS is subject to additional regulatory oversight for its nonsafety-related functions to provide post 72-hour cooling to the nuclear island chillers and standby diesel generators and to provide cooling support to FAPCS.

The functional arrangement of the RCCWS is shown on Figure 2.12.3-1.

(1) The RCCWS functional arrangement is as described in the Design Description of Section 2.12.3 and is shown on Figure 2.12.3-1.

(2) The RCCWS provides the nonsafety-related function to support post-72 hour cooling for nuclear island chillers and standby diesel generators and provides cooling support for FAPCS.

(3) The RCCWS can be operated and controlled from the MCR.

(4) RCCWS flow indication is provided in the MCR.

Inspections, Tests, Analyses and Acceptance Criteria

Table 2.12.3-1 provides definitions of the inspections, tests, and/or analyses, together with associated acceptance criteria for the RCCWS.

Table 2.12.3-1

ITAAC For The Reactor Component Cooling Water System

Design Commitment	Inspections, Tests, Analyses	Acceptance Criteria
1. The RCCWS functional arrangement is as described in the Design Description of Section 2.12.3 and as shown on Figure 2.12.3-1.	Inspection of the as-built system will be performed.	Report(s) documents that the as-built RCCWS System conforms to the functional arrangement described in the Design Description of this Section 2.12.3 and as shown on Figure 2.12.3-1.
2. The RCCWS provides the nonsafety-related function to support post-72 hour cooling for nuclear island chillers and standby diesel generators and provides cooling support for FAPCS.	Testing of the RCCWS will be performed to demonstrate flow to the nuclear island chillers, standby diesel generators and FAPCS.	A report documents that the RCCWS test demonstrates flow to the nuclear island chillers, standby diesel generators, and FAPCS.
3. The RCCWS can be operated and controlled from the MCR.	Testing will be performed to demonstrate RCCWS flow capability will be performed on the RCCWS components using controls in the MCR.	A report documents that the MCR controls caused the RCCWS components to operate during the flow test.
4. RCCWS flow indication is provided in the MCR.	Inspection will verify that RCCWS flow indication can be retrieved in the MCR.	A report documents that the RCCWS flow indication can be retrieved in the MCR.

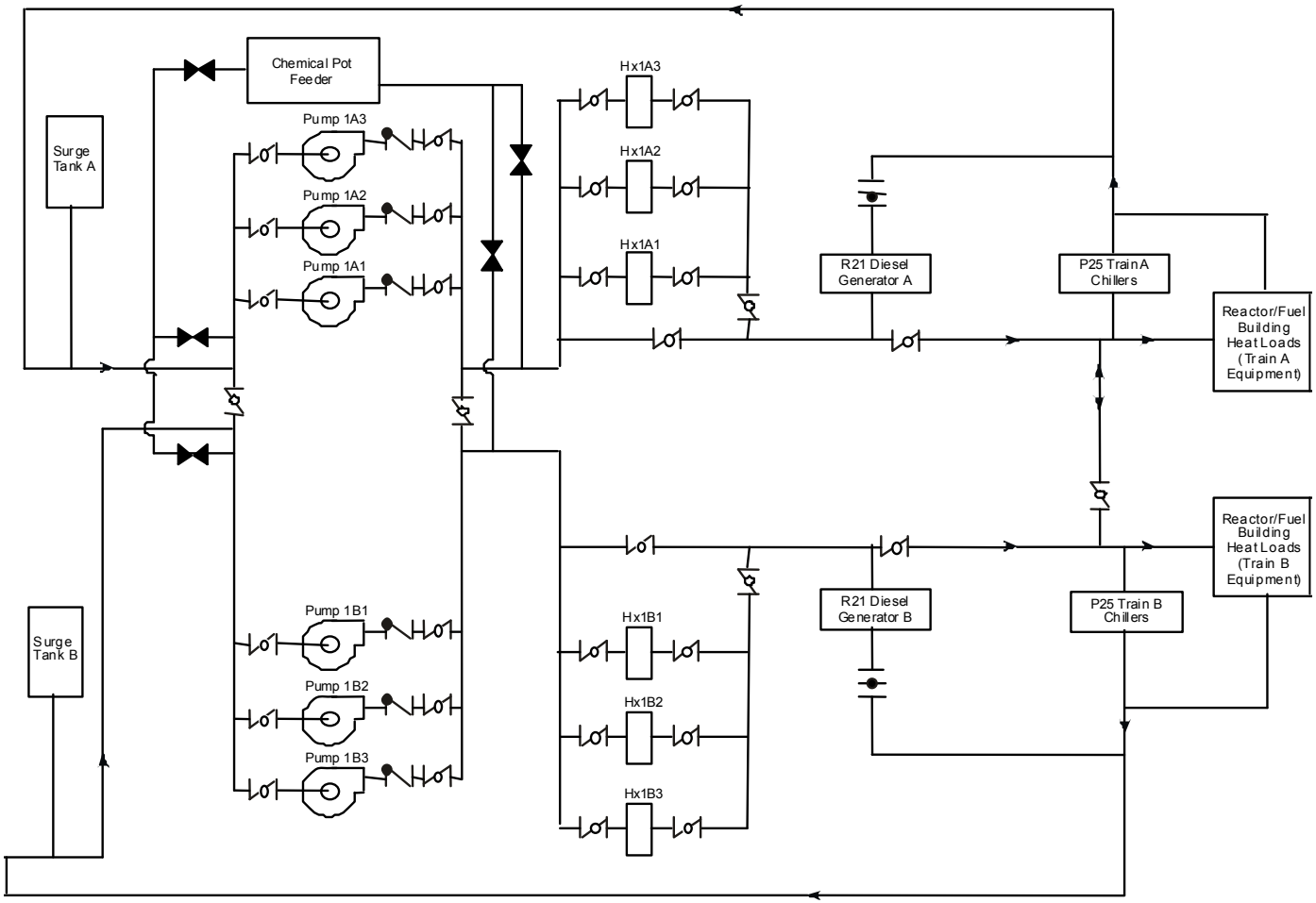

Figure 2.12.3-1. Reactor Component Cooling Water System Functional Arrangement

2.12.4 Turbine Component Cooling Water System

No ITAAC are required for this sytem.

2.12.5 Chilled Water System

The Chilled Water System (CWS) does not perform or ensure any active safety-related function, and is not required to achieve or maintain safe shutdown. The CWS has safety-related containment penetrations and isolation valves, which are required to maintain containment integrity. In addition, the NICWS is subject to additional regulatory oversight for its nonsafety-related functions to provide post 72-hour cooling support for RCCWS and HVAC systems.

The functional arrangement of the NICWS is shown on Figure 2.12.5-1.

(1) The NICWS functional arrangement is as described in the Design Description of Subsection 2.12.5.with the system layout as shown on Figure 2.12.5-1

(2) The NICWS provides the nonsafety-related function to support post-72 hour cooling for RCCWS and HVAC systems.

(3) The NICWS can be operated and controlled from the MCR.

(4) NICWS flow indication is provided in the MCR.

(5) The CWS has safety-related containment penetrations and isolation valves.

Inspections, Tests, Analyses and Acceptance Criteria

Table 2.12.5-1 provides definitions of the inspections, tests, and/or analyses, together with associated acceptance criteria for the CWS.

Table 2.12.5-1

ITAAC For The Chilled Water System

Design Commitment	Inspections, Tests, Analyses	Acceptance Criteria
1. The NICWS functional arrangement is described in the Design Description of Subsection 2.12.5 and as shown on Figure 2.12.5-1.	Inspection of the as-built system will be performed.	Report(s) document that the as-built NICWS System conforms to the functional arrangement as described in the Design Description of this Section 2.12.5 and as shown on Figure 2.12.5-1.
2. The NICWS provides the nonsafety-related function to support post-72 hour cooling for RCCWS and HVAC systems.	Testing of the NICWS will be performed to demonstrate flow to the RCCWS and HVAC systems.	A report documents that the NICWS test demonstrates flow to the RCCWS and HVAC systems.
3. The NICWS can be operated and controlled from the MCR.	Testing will be performed to demonstrate NICWS flow capability will be performed on the NICWS components using controls in the MCR.	A report documents that the MCR controls caused the NICWS components to operate during the flow test.
4. NICWS flow indication is provided in the MCR.	Inspection will verify that NICWS flow indication can be retrieved in the MCR.	A report documents that NICWS flow indication can be retrieved in the MCR.
5. The CWS has safety-related containment penetrations and isolation valves.	See Tier 1, Subsection 2.15.1.	See Tier 1, Subsection 2.15.1.

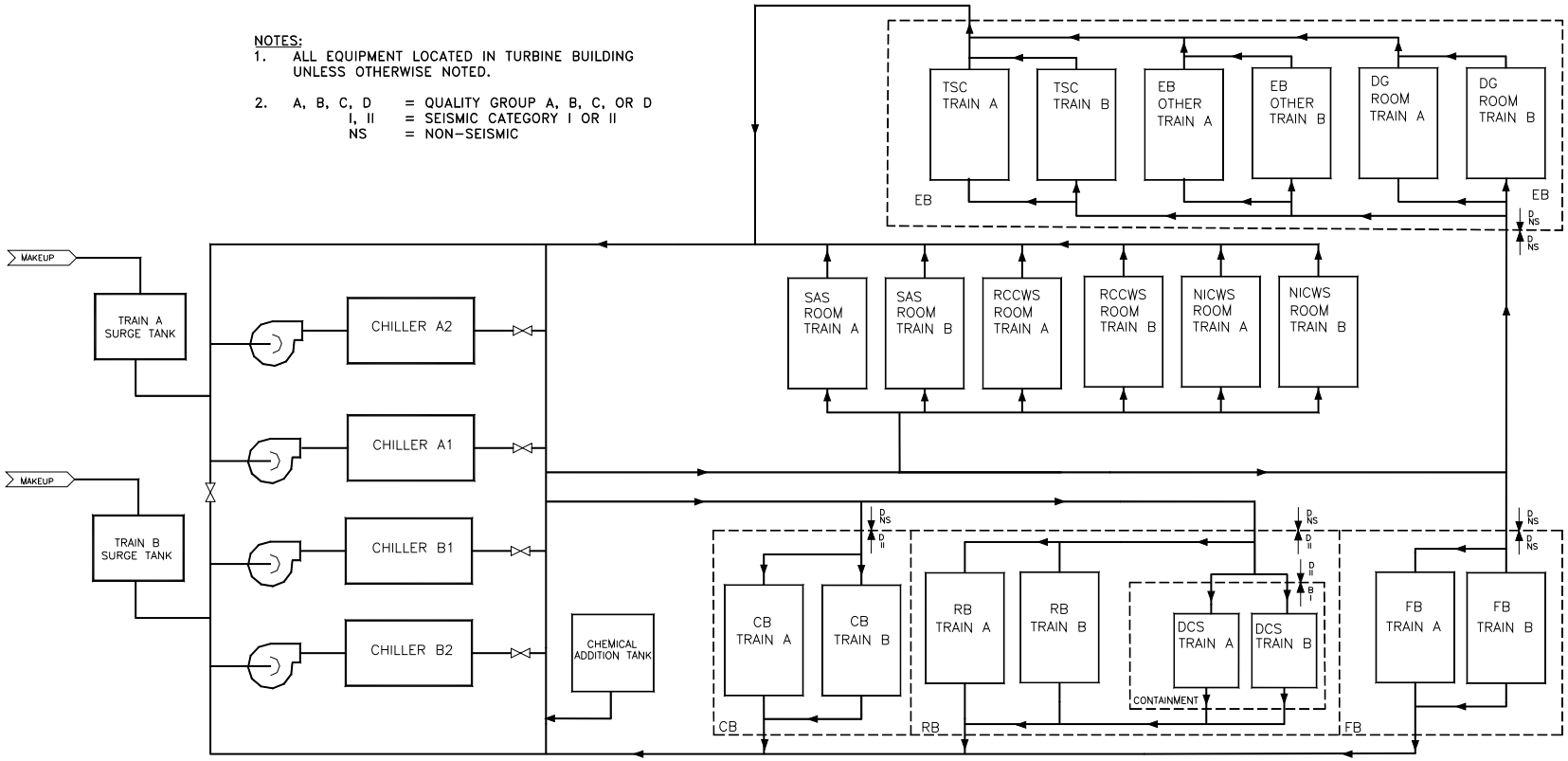

Figure 2.12.5-1. NICWS Functional Arrangement

2.12.6 Oxygen Injection System

No ITAAC are required for this system.

2.12.7 Plant Service Water System

Design Description

The Plant Service Water System (PSWS) does not perform or ensure any safety-related function, is not required to achieve or maintain safe shutdown, and has no interface with any safety-related component.

The functional arrangement of the PSWS is shown on Figure 2.12.7-1.

(1) The PSWS functional arrangement is as described in the Design Description of Section 2.12.7 and as shown on Figure 2.12.7-1.

(2) The PSWS provides the nonsafety-related functions to support post-72 hour cooling for RCCWS.

(3) The PSWS can be operated and controlled from the MCR.

(4) PSWS flow indication is provided in the MCR.

Inspections, Tests, Analyses and Acceptance Criteria

Table 2.12.7-1 provides definitions of the inspections, tests, and/or analyses, together with associated acceptance criteria for the PSWS.

Table 2.12.7-1

ITAAC For The Plant Service Water System

Design Commitment	Inspections, Tests, Analyses	Acceptance Criteria
1. The PSWS functional arrangement is as described in the Design Description of Section 2.12.7 and as shown on Figure 2.12.7-1.	Inspection of the as-built system will be performed.	Report(s) document that the as-built PSWS System conforms to the functional arrangement as described in the Design Description of Section 2.12.7 and as shown on Figure 2.12.7-1.
2. The PSWS provides the nonsafety-related function to support post-72 hour cooling for RCCWS.	Testing of the PSWS will be performed to demonstrate flow to the RCCWS.	A report documents that the test of PSWS demonstrates flow to the RCCWS.
3. The PSWS can be operated and controlled from the MCR.	Testing will be performed to demonstrate flow capability on the PSWS components using controls in the MCR.	A report documents that the MCR controls caused the PSWS components to operate during the flow test.
4. PSWS flow indication is provided in the MCR.	Inspection will verify that PSWS flow indication can be retrieved in the MCR.	A report documents that PSWS flow indication can be retrieved in the MCR.

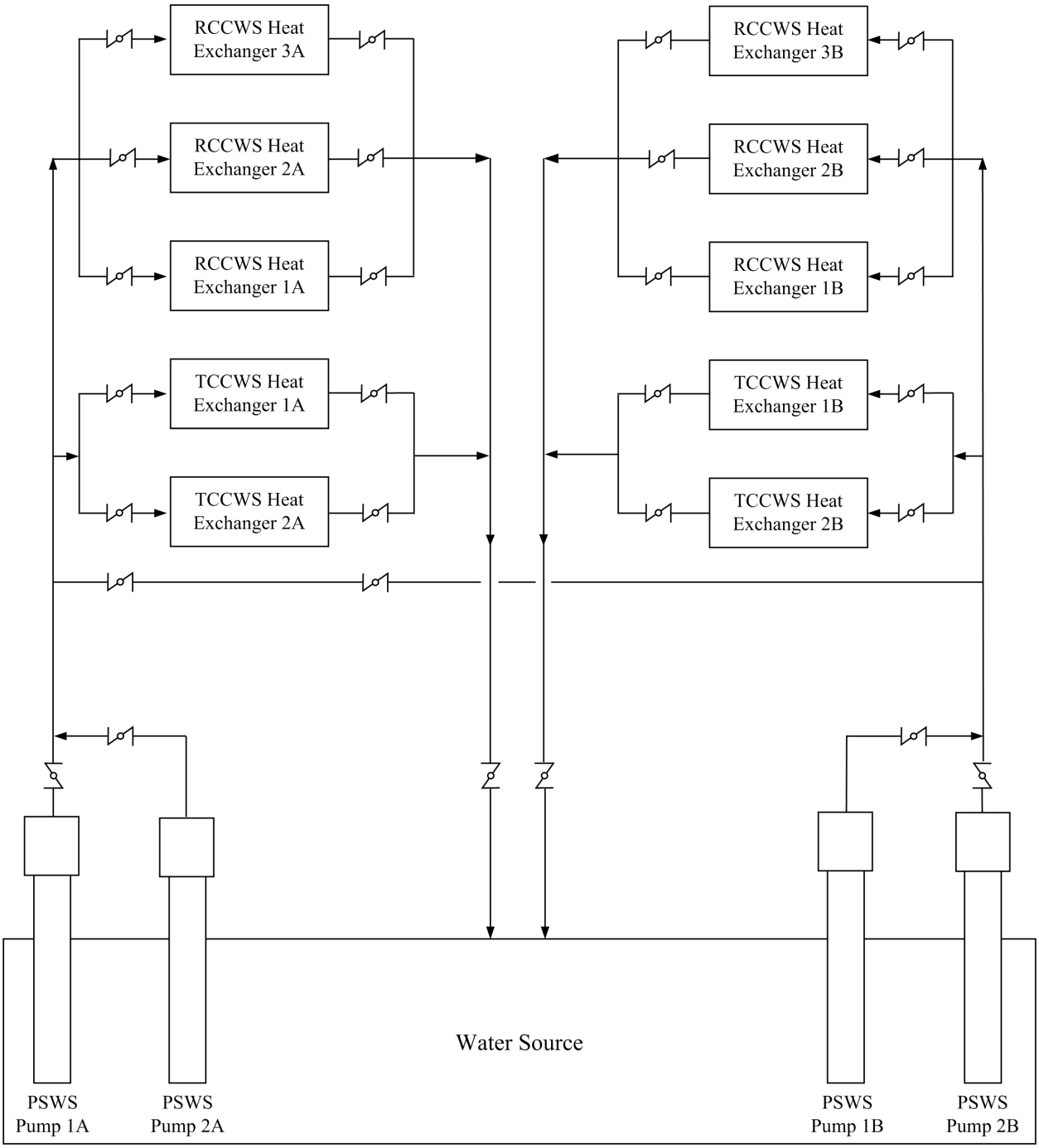

Figure 2.12.7-1. Plant Service Water System Functional Arrangement

2.12.8 Service Air System

Design Description

The Service Air System (SAS) is a nonsafety-related system, and has no safety design basis other than provisions for safety-related containment penetrations and isolation valves.

(1) The SAS has safety-related containment penetrations and isolation valves.

Inspections, Tests, Analyses and Acceptance Criteria

Table 2.12.8-1 provides a definition of the inspections, tests, and/or analyses, together with associated acceptance criteria for the SAS.

Table 2.12.8-1

ITAAC For The Service Air System

Design Commitment	Inspections, Tests, Analyses	Acceptance Criteria
1. The SAS has safety-related containment penetrations and isolation valves.	See Tier 1, Subsection 2.15.1.	See Tier 1, Subsection 2.15.1.

2.12.9 Instrument Air System

No ITAAC are required for this system.

2.12.10 High Pressure Nitrogen Supply System

Design Description

The High Pressure Nitrogen Supply System (HPNSS) is a nonsafety-related system, and has no safety design basis other than provision for safety-related containment penetrations and isolation valves.

(1) The HPNSS has safety-related containment penetrations and isolation valves.

Inspections, Tests, Analyses and Acceptance Criteria

Table 2.12.10-1 provides a definition of the inspections, tests, and/or analyses, together with associated acceptance criteria for the High Pressure Nitrogen Supply System.

Table 2.12.10-1

ITAAC For The High Pressure Nitrogen Supply System

Design Commitment	Inspections, Tests, Analyses	Acceptance Criteria
1. The HPNSS has safety-related containment penetrations and isolation valves.	See Tier 1, Subsection 2.15.1.	See Tier 1, Subsection 2.15.1.

2.12.11 Auxiliary Boiler System

No ITAAC are required for this system.

2.12.12 Potable Water System

No ITTAC are required for this system.

2.12.13 Hydrogen Water Chemistry System

This system is optional. If the optional system is implemented in a specific plant, no ITAAC are required for this system.

2.12.14 Process Sampling System

No ITTAC are required for this system.

2.12.15 Zinc Injection System

No ITAAC are required for this system.

2.12.16 Freeze Protection

No ITAAC are required for this system.

2.12.17 Station Water System

No ITAAC are required for this system.

2.13 ELECTRICAL SYSTEMS

2.13.1 Onsite AC Power System

Design Description

The purpose of the Onsite AC Power System is to provide power to the power generation nonsafety-related loads and the plant's investment protection (PIP) nonsafety-related loads. The PIP buses also supply power to the four (4) safety-related, 480VAC, Isolation Power Center buses and the two (2) ancillary diesel buses. The nonsafety-related PIP buses and ancillary diesel buses have a Regulatory Treatment of Non-Safety Systems (RTNSS) function to supply power to RTNSS credited loads.

(1) The functional arrangement of Onsite AC Power System is as described in the Design Description of subsection 2.13.1 and Table 2.13.1-1, and as shown on Figure 2.13.1-1.

(2) The safety-related 480 VAC Isolation Power Center equipment identified in Table 2.13.1-1 conforms to Seismic Category I requirements and is housed in Seismic Category I structures.

(3) a. Independence is provided between safety-related divisions as required by Regulatory Guide 1.75.

b. Separation is provided between safety-related divisions, and between safety-related divisions and nonsafety-related equipment as required by Regulatory Guide 1.75.

(4) Each safety-related Isolation Power Center supplies power to safety-related loads in its respective division.

(5) Isolation Power Centers and their associated loads are protected against undervoltage, degraded voltage and under-frequency conditions.

(6) The Onsite AC Power System provides the following nonsafety-related functions:

a. The Onsite AC Power System provides the capability for distributing nonsafety-related AC power from onsite sources to nonsafety-related RTNSS loads.

b. The Onsite AC Power System provides a PIP bus undervoltage signal to trip the PIP bus normal and alternate preferred power supply breakers.

(7) The onsite AC Power System minimum inventory of alarms, displays, controls, and status indications in the main control room are addressed in Section 3.3.

(8) Environmental qualification of safety-related 480 VAC Isolation Power Center equipment is addressed in Tier 1 Section 3.8.

Inspections, Tests, Analyses and Acceptance Criteria

Table 2.13.1-2 provides a definition of the inspections, tests, and/or analyses, together with associated acceptance criteria for the Electrical Power Distribution System.

Table 2.13.1-1

System Equipment

Equipment Description	Location	Seismic Cat. I	Safety Related
Isolation Power Center Bus A31 Normal Main Circuit Breaker	Reactor Building	Yes	Yes
Isolation Power Center Bus A31 Alternate Main Circuit Breaker	Reactor Building	Yes	Yes
Isolation Power Center Bus B31 Normal Main Circuit Breaker	Reactor Building	Yes	Yes
Isolation Power Center Bus B31 Alternate Main Circuit Breaker	Reactor Building	Yes	Yes
Isolation Power Center Bus C31 Normal Main Circuit Breaker	Reactor Building	Yes	Yes
Isolation Power Center Bus C31 Alternate Main Circuit Breaker	Reactor Building	Yes	Yes
Isolation Power Center Bus D31 Normal Main Circuit Breaker	Reactor Building	Yes	Yes
Isolation Power Center Bus D31 Alternate Main Circuit Breaker	Reactor Building	Yes	Yes
Isolation Power Center Bus A31 Supply Breaker to Division 1 250 VDC Bus 11 Normal Battery Charger	Reactor Building	Yes	Yes
Isolation Power Center Bus A31 Supply Breaker to Division 1 250 VDC Bus 12 Normal Battery Charger	Reactor Building	Yes	Yes
Isolation Power Center Bus A31 Supply Breaker to Division 1 250 VDC Standby Battery Charger	Reactor Building	Yes	Yes
Isolation Power Center Bus A31 Supply Breaker to Division 1 UPS Rectifier 1-1	Reactor Building	Yes	Yes
Isolation Power Center Bus A31 Supply Breaker to Division 1 UPS Rectifier 1-2	Reactor Building	Yes	Yes

Table 2.13.1-1

System Equipment

Equipment Description	Location	Seismic Cat. I	Safety Related
Isolation Power Center Bus B31 Supply Breaker to Division 2 250 VDC Bus 21 Normal Battery Charger	Reactor Building	Yes	Yes
Isolation Power Center Bus B31 Supply Breaker to Division 2 250 VDC Bus 22 Normal Battery Charger	Reactor Building	Yes	Yes
Isolation Power Center Bus B31 Supply Breaker to Division 1 250 VDC Standby Battery Charger	Reactor Building	Yes	Yes
Isolation Power Center Bus B31 Supply Breaker to Division 2 UPS Rectifier 2-1	Reactor Building	Yes	Yes
Isolation Power Center Bus B31 Supply Breaker to Division 2 UPS Rectifier 2-2	Reactor Building	Yes	Yes
Isolation Power Center Bus C31 Supply Breaker to Division 3 250 VDC Bus 31 Normal Battery Charger	Reactor Building	Yes	Yes
Isolation Power Center Bus C31 Supply Breaker to Division 3 250 VDC Bus 32 Normal Battery Charger	Reactor Building	Yes	Yes
Isolation Power Center Bus C31 Supply Breaker to Division 3 250 VDC Standby Battery Charger	Reactor Building	Yes	Yes
Isolation Power Center Bus C31 Supply Breaker to Division 3 UPS Rectifier 3-1	Reactor Building	Yes	Yes
Isolation Power Center Bus C31 Supply Breaker to Division 3 UPS Rectifier 3-2	Reactor Building	Yes	Yes
Isolation Power Center Bus D31 Supply Breaker to Division 4 250 VDC Bus 41 Normal Battery Charger	Reactor Building	Yes	Yes
Isolation Power Center Bus D31 Supply Breaker to Division 4 250 VDC Bus 42 Normal Battery Charger	Reactor Building	Yes	Yes

Table 2.13.1-1

System Equipment

Equipment Description	Location	Seismic Cat. I	Safety Related
Isolation Power Center Bus D31 Supply Breaker to Division 4 250 VDC Standby Battery Charger	Reactor Building	Yes	Yes
Isolation Power Center Bus D31 Supply Breaker to Division 4 UPS Rectifier 4-1	Reactor Building	Yes	Yes
Isolation Power Center Bus D31 Supply Breaker to Division 4 UPS Rectifier 4-2	Reactor Building	Yes	Yes

Table 2.13.1-2

ITAAC For The Onsite AC Power System

Design Commitment	Inspections, Tests, Analyses	Acceptance Criteria
1. The functional arrangement of Onsite AC Power System is as described in the Design Description of subsection 2.13.1 and Table 2.13.1-1, and as shown on Figure 2.13.1-1.	Inspections of the as-built Onsite AC Power System will be performed.	Inspection report(s) document that the as-built Onsite AC Power System conforms with the functional arrangement as described in the design description of subsection 2.13.1 and shown in Table 2.13.1-1 and, as shown in Figure 2.13.1-1.
2. The safety-related 480 VAC Isolation Power Center equipment identified in Table 2.13.1-1 conforms to Seismic Category I requirements and is housed in Seismic Category I structures.	i) Type tests and/or analyses of the safety-related 480 VAC Isolation Power Center equipment will be performed.	i) A report exists and concludes that the as-built safety-related 480 VAC Isolation Power Center equipment conforms to Seismic Category I requirements.
	ii) Inspections of the as-built safety-related 480 VAC Isolation Power Centers will be performed to verify that the equipment is installed in accordance with the configurations specified in the type tests and/or analyses.	ii) Inspection report(s) document that the as-built safety-related 480 VAC Isolation Power Center equipment is installed in accordance with the configurations specified by the type tests and/or analyses.
	iii) Inspections of the as-built safety-related 480 VAC Isolation Power Centers will be performed to verify that the equipment is housed in Seismic Category I structures.	iii) Inspection report(s) document that the as-built safety-related 480 VAC Isolation Power Center equipment is housed in Seismic Category I structures.

Table 2.13.1-2

ITAAC For The Onsite AC Power System

Design Commitment	Inspections, Tests, Analyses	Acceptance Criteria
3a. Independence is provided between safety-related divisions as required by Regulatory Guide 1.75..	Tests will be performed on the as-built safety-related 480 VAC Isolation Power Centers by providing a test signal in only one safety-related division at a time.	Test report(s) document that a test signal exists only in the as-built safety-related division under test in the 480 VAC Isolation Power Center.
b. Separation is provided between safety-related divisions, and between safety-related divisions and nonsafety-related equipment as required by Regulatory Guide 1.75.	Inspection of the as-built safety-related 480 VAC Isolation Power Centers will be performed.	Inspection report(s) document that, for the as-built safety-related 480 VAC Isolation Power Centers, physical separation and electrical isolation as required by Regulatory Guide 1.75 exists between safety-related divisions. Physical separation and electrical isolation as required by Regulatory Guide 1.75 exists between safety-related divisions and nonsafety-related equipment.
4. Each safety-related Isolation Power Center supplies power to safety-related loads of their respective division.	Tests will be performed using a test signal to confirm that an electrical path exists from the as-built safety-related Isolation Power Center to its divisional safety-related loads. Each test may be a single test or a series of over-lapping tests.	Test report(s) demonstrate that a test signal originating from the as-built divisional Isolation Power Center exists at the terminals of its divisional safety-related loads.

Table 2.13.1-2

ITAAC For The Onsite AC Power System

Design Commitment	Inspections, Tests, Analyses	Acceptance Criteria
5. Isolation Power Centers and their associated loads are protected against undervoltage, degraded voltage and under-frequency conditions.	Testing will be performed using real or simulated signals.	Test report(s) document that the Isolation Power Centers are protected against undervoltage, degraded voltage and under-frequency conditions by applying a real or simulated signal and verifying that the as-built Isolation Power Center bus isolates from the nonsafety-related system.
6. The Onsite AC Power System provides the following nonsafety-related functions: a. The Onsite AC Power System provides the capability for distributing nonsafety-related AC power from onsite sources to their designated RTNSS loads.	Tests will be performed using a test signal to confirm that an electrical path exists for each RTNSS load from its associated as-built bus. Each test may be a single test or a series of over-lapping tests.	Test report(s) will demonstrate that a test signal originating from the as-built bus exists at the terminals of each associated RTNSS load.
b. The Onsite AC Power System provides a PIP bus undervoltage signal to trip the PIP bus normal and alternate preferred power supply breakers.	Testing will be performed using real or simulated PIP bus undervoltage signals.	Test report(s) demonstrate that the as-built PIP bus normal and alternate preferred power supply breakers trip after receiving a real or simulated PIP bus undervoltage signal.
c. Deleted		

Table 2.13.1-2

ITAAC For The Onsite AC Power System

Design Commitment	Inspections, Tests, Analyses	Acceptance Criteria
7. The Onsite AC Power System minimum inventory of alarms, displays, controls, and status indications in the main control room are addressed in Section 3.3	See Section 3.3.	See Section 3.3.
8. Environmental qualification of safety-related 480 VAC Isolation Power Center equipment is addressed in Section 3.8.	See Section 3.8.	See Section 3.8.

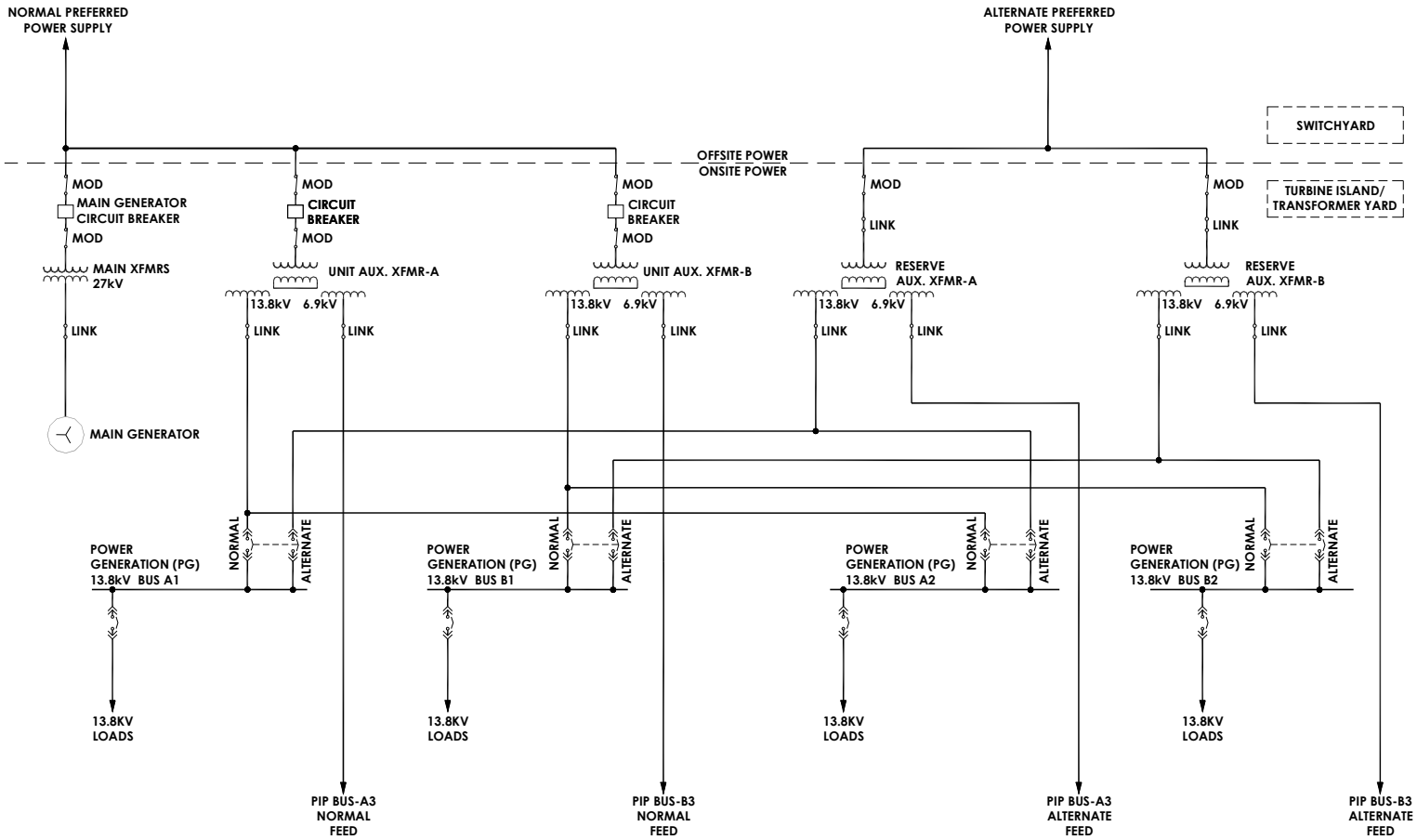

Figure 2.13.1-1 Sh 1.
Onsite AC Power System Functional Arrangement

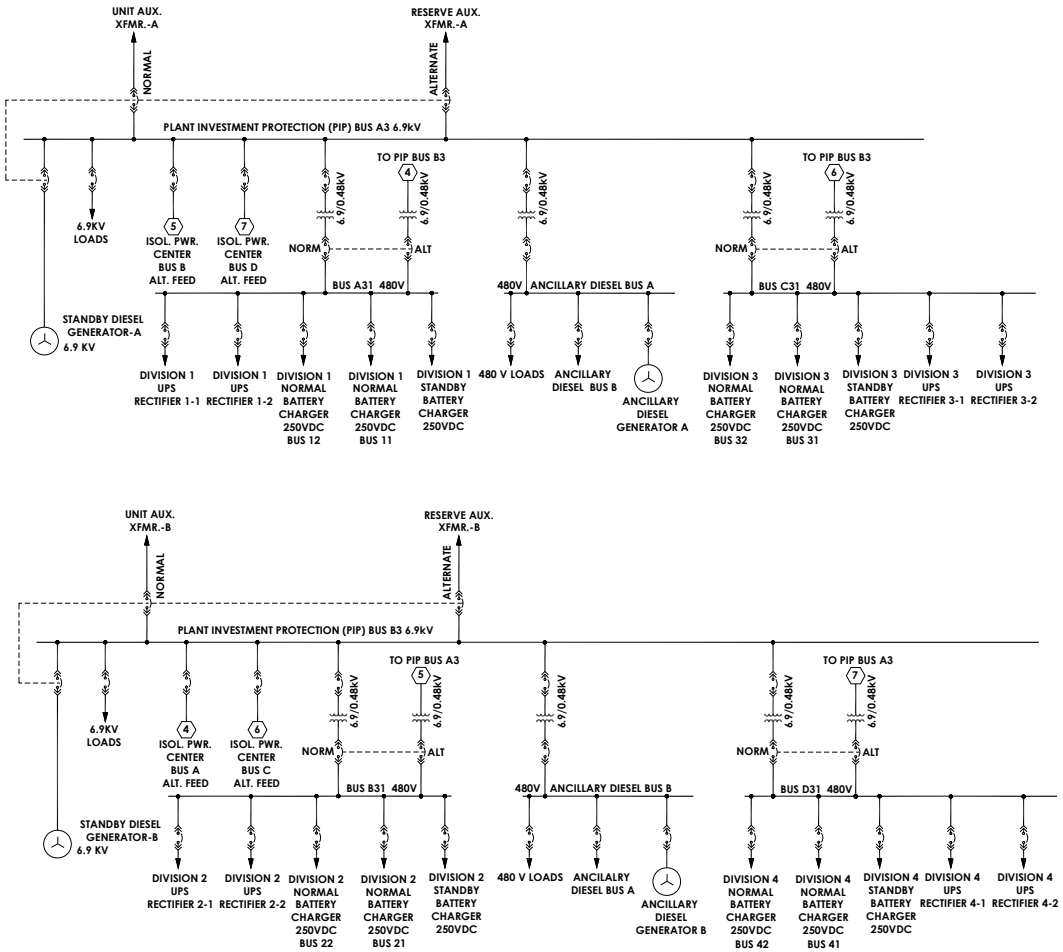

Figure 2.13.1-1 Sh 2.
Onsite AC Power System Functional Arrangement

2.13.2 Deleted

2.13.3 Direct Current Power Supply

Design Description

Completely independent safety-related and nonsafety-related DC power systems are provided.

Nonsafety-related DC power systems are not part of the plant safety-related design basis, and are independent and separate from the safety-related DC power supplies.

The 250 V Safety-Related DC systems provide four divisions of power to operate safety–related loads for at least 72 hours following a design basis accident. The 250V Safety-Related DC systems are also adequately sized for the station blackout conditions.

(1) The functional arrangement of the 250 V Safety-Related DC systems is as described in subsection 2.13.3 Design Description and Table 2.13.3-1 and as shown on Figure 2.13.3-1.

(2) The functional arrangement of the 125 V and 250 V Nonsafety-Related DC systems is as described in subsection 2.13.3 and as shown on Figure 2.13.3-2.

(3) Two 250 V safety-related batteries in each division are together sized to supply their design loads, at the end of installed life, for a minimum of 72 hours without recharging.

(4) The 250 V Safety-Related DC systems equipment identified in Table 2.13.3-1 conform to Seismic Category I requirements and are housed in Seismic Category I structures.

(5) The 250 V Safety-Related DC systems provide four independent and redundant safety-related divisions.

(6) Separation is provided between safety-related divisions, and between safety-related divisions and nonsafety-related equipment as required by Regulatory Guide 1.75.

(7) Each battery charger associated with each 250 VDC safety-related battery is capable of restoring its battery after a bounding design basis event discharge to a state that the battery can perform its design basis function for subsequent postulated operational and design basis functions, while at the same time supplying the largest combined demands associated with the battery, within the time stated in the design basis, consistent with the requirement given in IEEE 308.

(8) The 250 V Safety-Related DC battery and battery charger circuit breakers, and DC distribution panels and their circuit breakers and fuses, are sized to supply their load requirements.

(9) The battery chargers are designed to prevent their AC source from becoming a load on the 250 VDC safety-related batteries when the AC power source is de-energized or has degraded voltage.

(10) The Direct Current Power Supply minimum inventory of alarms, displays, controls, and status indications in the main control room are addressed in Section 3.3.

(11) Environmental qualification of the 250 V Safety-Related DC systems is addressed in Tier 1 Section 3.8.

Inspections, Tests, Analyses and Acceptance Criteria

Table 2.13.3-3 provides a definition of the inspections, tests, and/or analyses, together with associated acceptance criteria for the Direct Current Power Supply.

Table 2.13.3-1

System Equipment

Equipment Description	Location	Seismic Cat. I	Safety Related
Division 1 Bus 11 250 VDC Battery	Reactor Building	Yes	Yes
Division 1 Bus 12 250 VDC Battery	Reactor Building	Yes	Yes
Division 2 Bus 21 250 VDC Battery	Reactor Building	Yes	Yes
Division 2 Bus 22 250 VDC Battery	Reactor Building	Yes	Yes
Division 3 Bus 31 250 VDC Battery	Reactor Building	Yes	Yes
Division 3 Bus 32 250 VDC Battery	Reactor Building	Yes	Yes
Division 4 Bus 41 250 VDC Battery	Reactor Building	Yes	Yes
Division 4 Bus 42 250 VDC Battery	Reactor Building	Yes	Yes
Division 1 Bus 11 250 VDC Normal Battery Charger	Reactor Building	Yes	Yes
Division 1 Bus 12 250 VDC Normal Battery Charger	Reactor Building	Yes	Yes
Division 1 250 VDC Standby Battery Charger	Reactor Building	Yes	Yes
Division 2 Bus 21 250 VDC Normal Battery Charger	Reactor Building	Yes	Yes
Division 2 Bus 22 250 VDC Normal Battery Charger	Reactor Building	Yes	Yes
Division 2 250 VDC Standby Battery Charger	Reactor Building	Yes	Yes
Division 3 Bus 31 250 VDC Normal Battery	Reactor	Yes	Yes

Table 2.13.3-1

System Equipment

Equipment Description	Location	Seismic Cat. I	Safety Related
Charger	Building		
Division 3 Bus 32 250 VDC Normal Battery Charger	Reactor Building	Yes	Yes
Division 3 250 VDC Standby Battery Charger	Reactor Building	Yes	Yes
Division 4 Bus 41 250 VDC Normal Battery Charger	Reactor Building	Yes	Yes
Division 4 Bus 42 250 VDC Normal Battery Charger	Reactor Building	Yes	Yes
Division 4 250 VDC Standby Battery Charger	Reactor Building	Yes	Yes
Division 1 Bus 11 250 VDC Power Center	Reactor Building	Yes	Yes
Division 1 Bus 12 250 VDC Power Center	Reactor Building	Yes	Yes
Division 2 Bus 21 250 VDC Power Center	Reactor Building	Yes	Yes
Division 2 Bus 22 250 VDC Power Center	Reactor Building	Yes	Yes
Division 3 Bus 31 250 VDC Power Center	Reactor Building	Yes	Yes
Division 3 Bus 32 250 VDC Power Center	Reactor Building	Yes	Yes
Division 4 Bus 41 250 VDC Power Center	Reactor Building	Yes	Yes
Division 4 Bus 42 250 VDC Power Center	Reactor Building	Yes	Yes
Division 1 Bus 11 250 VDC Transfer Switch Box	Reactor Building	Yes	Yes
Division 1 Bus 12 250 VDC Transfer Switch	Reactor	Yes	Yes

Table 2.13.3-1

System Equipment

Equipment Description	Location	Seismic Cat. I	Safety Related
Box	Building		
Division 2 Bus 21 250 VDC Transfer Switch Box	Reactor Building	Yes	Yes
Division 2 Bus 22 250 VDC Transfer Switch Box	Reactor Building	Yes	Yes
Division 3 Bus 31 250 VDC Transfer Switch Box	Reactor Building	Yes	Yes
Division 3 Bus 32 250 VDC Transfer Switch Box	Reactor Building	Yes	Yes
Division 4 Bus 41 250 VDC Transfer Switch Box	Reactor Building	Yes	Yes
Division 4 Bus 42 250 VDC Transfer Switch Box	Reactor Building	Yes	Yes

Table 2.13.3-2
Equipment Displays/Status Indication

Equipment Description	Display/Status Indication
Division 1 Bus 11 250 VDC Battery	Yes
Division 1 Bus 12 250 VDC Battery	Yes
Division 2 Bus 21 250 VDC Battery	Yes
Division 2 Bus 22 250 VDC Battery	Yes
Division 3 Bus 31 250 VDC Battery	Yes
Division 3 Bus 32 250 VDC Battery	Yes
Division 4 Bus 41 250 VDC Battery	Yes
Division 4 bus 42 250 VDC Battery	Yes
Division 1 Bus 11 250 VDC Normal Battery Charger	Yes
Division 1 Bus 12 250 VDC Normal Battery Charger	Yes
Division 1 250 VDC Standby Battery Charger	Yes
Division 2 Bus 21 250 VDC Normal Battery Charger	Yes
Division 2 Bus 22 250 VDC Normal Battery Charger	Yes
Division 2 250 VDC Standby Battery Charger	Yes
Division 3 Bus 31 250 VDC Normal Battery Charger	Yes
Division 3 Bus 32 250 VDC Normal Battery Charger	Yes
Division 3 250 VDC Standby Battery Charger	Yes
Division 4 Bus 41 250 VDC Normal Battery Charger	Yes
Division 4 Bus 42 250 VDC Normal Battery Charger	Yes
Division 4 250 VDC Standby Battery Charger	Yes

Table 2.13.3-3

ITAAC For The Direct Current Power Supply

Design Commitment	Inspections, Tests, Analyses	Acceptance Criteria
1. The functional arrangement of the 250 V Safety-Related DC systems is as described in Subsection 2.13.3 Design Description and Table 2.13-1 and as shown on Figure 2.13.3-1.	Inspections of the as-built 250 V Safety-Related DC systems will be performed.	Inspection report(s) document that the as-built 250 V Safety-Related DC systems conform with the functional arrangement as shown in Figure 2.13.3-1 and as described in section 2.13.3 and component locations are as shown in Table 2.13.3-1.
2. The functional arrangement of the 125 V and 250V Nonsafety-Related DC systems is as shown on Figure 2.13.3-2 and as described in section 2.13.3.	Inspections of the as-built 125 V and 250 V Nonsafety-Related DC systems will be performed.	Inspection report(s) document that the as-built 125 V and 250 V Nonsafety-Related DC systems conform with the functional arrangement as shown in Figure 2.13.3-2 and as described in section 2.13.3

Table 2.13.3-3

ITAAC For The Direct Current Power Supply

Design Commitment	Inspections, Tests, Analyses	Acceptance Criteria
3. Two 250V safety-related batteries in each division are together sized to supply their design loads, at the end of installed life, for a minimum of 72 hours without recharging.	a. Analyses for the as-built safety-related batteries to determine battery capacities will be performed based on the design duty cycle for each battery.	a. Analysis reports of the as-built batteries exist and conclude that two safety-related batteries in each division together have the capacity, as determined by the vendor performance specification, to supply their rated constant current for a minimum of 72 hours without recharging.
	b. Tests of each as-built safety-related battery will be conducted by simulating loads which envelope the analyzed battery design duty cycle.	b. Test report(s) conclude that the capacity of each as-built safety-related battery equals or exceeds the analyzed battery design duty cycle capacity.
4. The 250 V Safety-Related DC systems equipment identified in Table 2.13.3-1 - Conform to Seismic Category I requirements, and - Are housed in Seismic Category I structures.	i) Type tests and/or analyses of the 250V Safety-Related DC system equipment will be performed.	i) A report exists and concludes that the as-built 250V Safety-Related DC system equipment conforms to Seismic Category I requirements.
	ii) Inspections of the as-built 250V Safety-Related DC systems will be performed to verify that the equipment is installed in accordance with the configurations specified in the type tests and/or analyses.	ii) Inspection report(s) document that the as-built 250V Safety-Related DC system equipment is installed in accordance with the configurations specified by the type tests and/or analyses.

Table 2.13.3-3

ITAAC For The Direct Current Power Supply

Design Commitment	Inspections, Tests, Analyses	Acceptance Criteria
	iii) Inspections of the as-built 250V Safety-Related DC systems will be performed to verify that the equipment is housed in Seismic Category I structures.	iii) Inspection report(s) document that the as-built 250V Safety-Related DC system equipment is housed in Seismic Category I structures.
5. The 250 V Safety-Related DC systems provide four independent and redundant safety-related divisions.	Tests will be performed on the as-built 250 V Safety-Related DC systems by providing a test signal in only one safety-related division at a time.	i) Test report (s) demonstrate that a test signal exists only in the as-built safety-related division under test in the 250 V Safety-Related DC systems. ii) Test report(s) demonstrate that a test signal originating from the as-built divisional safety-related 250 VDC distribution panel exists at the terminals of its divisional safety-related loads.
6. Separation is provided between safety-related divisions, and between safety-related divisions and nonsafety-related equipment as required by Regulatory Guide 1.75.	Inspection of the as-built 250 V Safety-Related DC systems will be performed.	Inspection report(s) document that, in the as-built 250 V Safety-Related DC systems, physical separation and electrical isolation as required by Regulatory Guide 1.75 exists between safety–related divisions. Physical separation and electrical isolation as required by Regulatory Guide 1.75 exists between safety-related divisions and nonsafety-related equipment.

Table 2.13.3-3

ITAAC For The Direct Current Power Supply

Design Commitment	Inspections, Tests, Analyses	Acceptance Criteria
7. Each battery charger associated with each 250 VDC safety-related battery is capable of restoring its battery after a bounding design basis event discharge to a state that the battery can perform its design basis function for subsequent postulated operational and design basis functions, while at the same time supplying the largest combined demands associated with the battery, within the time stated in the design basis, consistent with the requirement given in IEEE 308.	Testing of each 250 VDC safety-related battery charger will be performed.	Test report(s) document that following a bounding design basis event discharge, the battery charger is capable of restoring its associated battery to a state that the battery can perform its design basis function for subsequent postulated operational and design basis functions while at the same time supplying the largest combined demands associated with the battery, within the time stated in the design basis, consistent with the requirement given in IEEE 308.
8. The safety-related DC battery and battery charger circuit breakers, and DC distribution panels and their circuit breakers and fuses, are sized to supply their load requirements.	Analyses of the as-built 250V Safety-Related DC electrical distribution system will be performed to determine the capacities of the battery and battery charger circuit breakers, and DC distribution panels and their circuit breakers and fuses.	Analyses for the as-built 250V Safety-Related DC electrical distribution system exist, and analysis report(s) conclude that the capacities of safety-related battery and battery charger circuit breakers, and DC distribution panels and their circuit breakers and fuses, as determined by their nameplate ratings, exceed their analyzed load and DC interrupting current requirements.

Table 2.13.3-3

ITAAC For The Direct Current Power Supply

Design Commitment	Inspections, Tests, Analyses	Acceptance Criteria
9. The battery chargers are designed to prevent their AC source from becoming a load on the 250 VDC safety-related batteries when the AC power source is de-energized or has degraded voltage.	Testing of each 250 VDC safety-related battery charger will be performed to demonstrate that there is no power feedback from a loss of AC input power.	Test report(s) document that the 250 VDC safety-related battery chargers prevent the AC input source from becoming a load on the 250 VDC safety-related batteries during a loss of AC power condition.
10. The Direct Current Power Supply minimum inventory of alarms, displays, controls, and status indications in the main control room are addressed in Section 3.3.	See Section 3.3.	See Section 3.3.
11. Environmental qualification of the 250 V Safety-Related DC System is addressed in Section 3.8.	See Section 3.8.	See Section 3.8.

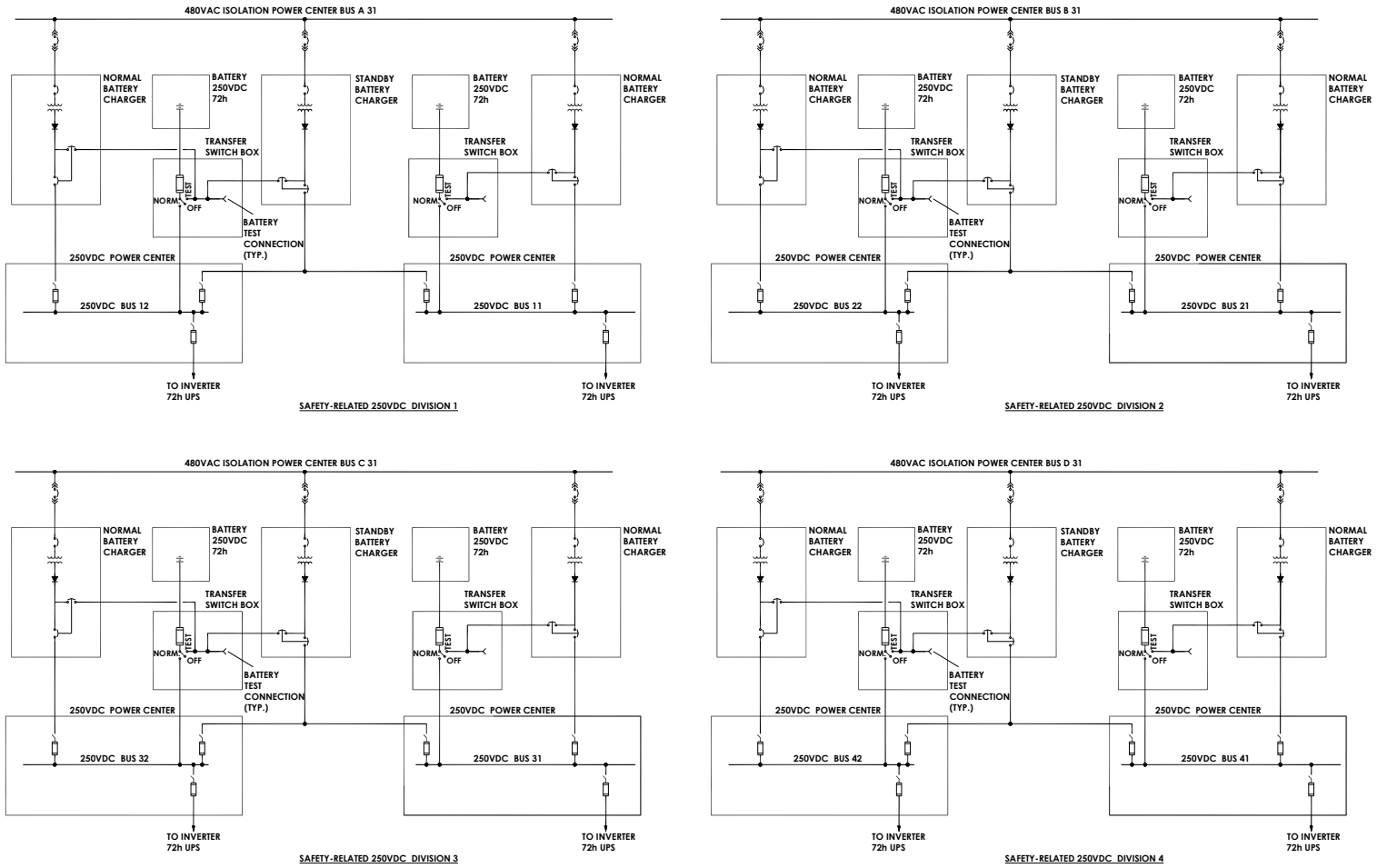

Figure 2.13.3-1.
Safety-Related 250 VDC System Functional Arrangement

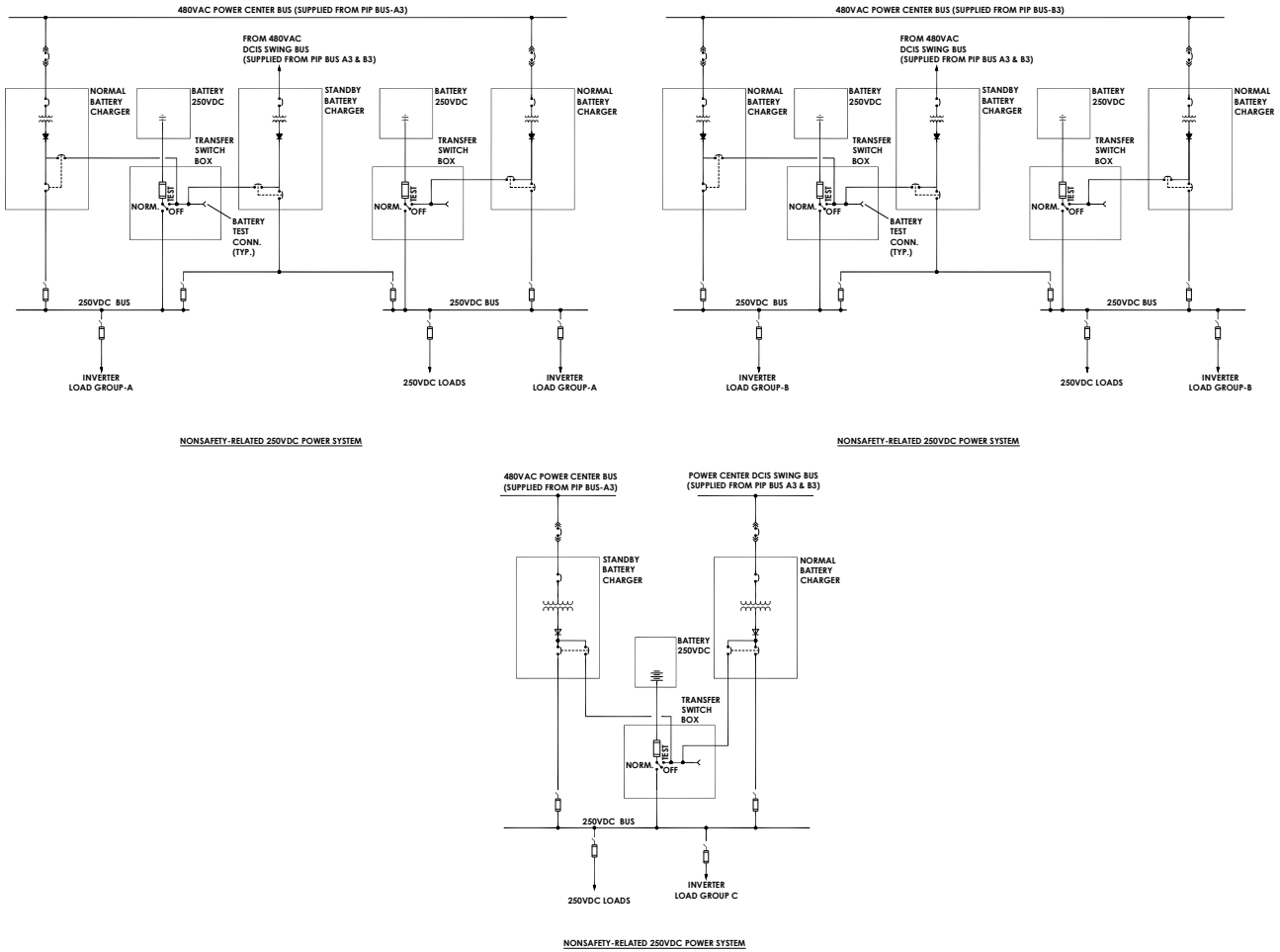

Figure 2.13.3-2 Sh 1.
Nonsafety-Related 250 VDC System Functional Arrangement

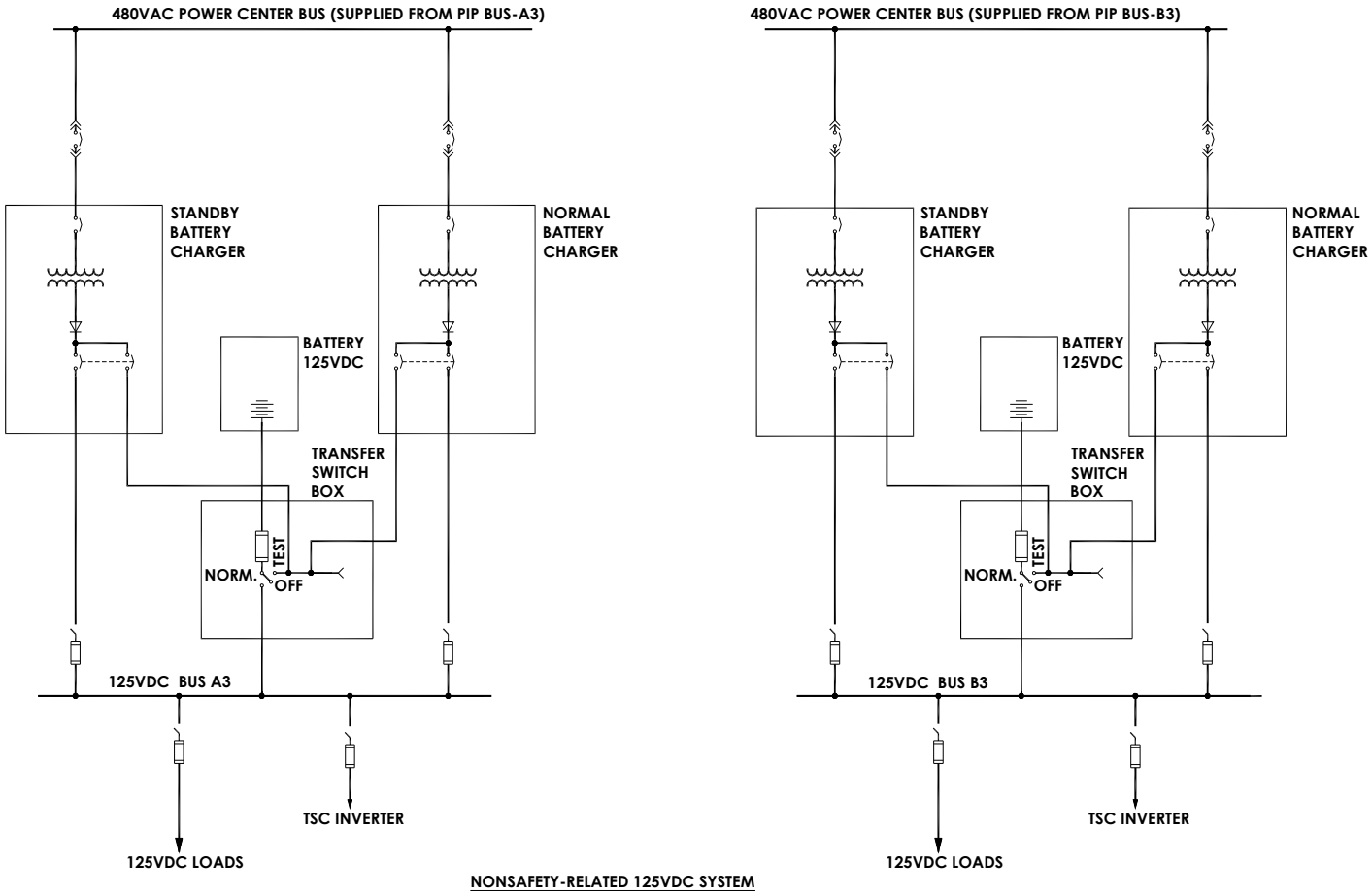

Figure 2.13.3-2 Sh 2.
Nonsafety-Related 125 VDC System Functional Arrangement

2.13.4 Onsite Diesel Generator Power Supply Systems

Design Description

There are two systems capable of supplying onsite AC power. They are the standby diesel generators (SDG) and the ancillary diesel generators (ADG).

Two independent nonsafety-related SDG, including their support systems, provide separate sources of onsite power for the nonsafety-related Plant Investment Protection (PIP) load groups when the normal and alternate preferred 6.9kV power supplies are not available. The nonsafety-related standby diesel generators have a Regulatory Treatment of Non-Safety Systems (RTNSS) function to provide power to the PIP buses that supply RTNSS loads.

Two nonsafety-related, seismic category II ADG, including their support systems, provide 480 VAC power for post accident support loads when the normal and alternate preferred 6.9 kV power supplies and the SDG are not available. The nonsafety-related ancillary diesel generators have a RTNSS function to provide power to the ancillary diesel buses that supply RTNSS loads.

(1) The functional arrangement of Standby Onsite Power System is as described in the Design Description of this Section 2.13.4 and as shown in Table 2.13.4-1.

(2) The Standby Onsite Power Supply System provides the following nonsafety-related functions:

a. Upon receipt of an undervoltage signal from the Onsite AC Power System, the standby diesel generator starts and achieves rated speed and voltage.

b. Each standby diesel generator is sized to accommodate its expected loads.

c. Each standby diesel generator fuel oil storage tank contains adequate fuel oil capacity for 7 days of standby diesel generator operation.

d. Each of the standby diesel generator fuel oil transfer pumps (two pumps per engine) starts automatically and transfer fuel oil from the standby fuel oil storage tank to the standby diesel generator day tank at a rate greater than or equal to the usage rate of the standby diesel generator.

e. Each of the standby diesel generator starting air receivers (two receivers per engine) is capable of three engine start attempts.

f. Each of the standby diesel generator jacket cooling water systems controls the flow of water to maintain required water temperature.

g. Each standby diesel generator has instrumentation provided to monitor lube oil temperature, pressure and sump level, ensuring proper operation of the system.

h. Each standby diesel generator is provided with a separate intake and exhaust system.

(3) The Standby Onsite Power Supply System minimum inventory of alarms, displays, controls, and status indications in the main control room are addressed in Section 3.3.

(4) The functional arrangement of the Ancillary Diesel Onsite Power Supply System is as described in the Design Description of this Section 2.13.4 and the component locations are shown in Table 2.13.4-1.

(5) The Ancillary Diesel Onsite Power Supply System provides the following nonsafety-related functions:

a. Upon receipt of an undervoltage signal from the Onsite AC Power System, the standby diesel generator starts, achieves rated speed and voltage, and produces a ready to load signal.

b. Upon receipt of a low ancillary diesel room temperature signal, the ancillary diesel generator starts, achieves rated speed and voltage, and produces a ready to load signal.

c. Each ancillary diesel generator is sized to accommodate its expected loads.

d. Each ancillary diesel generator fuel oil storage tank contains adequate fuel oil capacity for 7 days of ancillary diesel generator operation.

e. Each of the ancillary diesel generator fuel oil transfer pumps start automatically and transfer fuel oil from the ancillary fuel oil storage tank to the ancillary diesel generator day tank at a rate greater than or equal to the usage rate of the ancillary diesel generator.

(6) The Ancillary Diesel Onsite Power Supply System minimum inventory of alarms, displays, controls, and status indications are addressed in Section 3.3.

Inspections, Tests, Analyses and Acceptance Criteria

Table 2.13.4-2 provides a definition of the inspections, tests, and/or analyses, together with associated acceptance criteria for the Standby Onsite Power Supply System and the Ancillary Diesel Onsite Power Supply System.

Table 2.13.4-1
Equipment Location

Equipment Description	Location
Standby Diesel Generator A	Electrical Building
Standby Diesel Generator B	Electrical Building
Ancillary Diesel Generator A	Ancillary Diesel Building
Ancillary Diesel Generator B	Ancillary Diesel Building

Table 2.13.4-2

ITAAC For The Onsite Diesel Generator Power Supply Systems

Design Commitment	Inspections, Tests, Analyses	Acceptance Criteria
1. The functional arrangement of the Standby Onsite Power Supply is as described in the Design Description of Subsection 2.13.4	Inspections of the as-built system will be conducted.	Inspection report(s) document that the as-built Standby Onsite Power Supply system conform with the functional arrangement as described in the Design Description of Subsection 2.13.4 and Table 2.13.4-1.
2. The Standby Onsite Power Supply System provides the following nonsafety-related functions: a. Upon receipt of an undervoltage signal from the Onsite AC Power System, the standby diesel generator starts and achieves rated speed and voltage.	Tests of the as-built Standby Onsite Power Supply system will be conducted by providing a real or simulated undervoltage signal to start the standby diesel generators.	Test report(s) demonstrate that the as-built standby diesel generator starts upon receipt of a real or simulated undervoltage signal on its associated PIP bus and achieves rated speed and voltage..
b. Each standby diesel generator is sized to accommodate its expected loads.	Testing will be performed to demonstrate that each as-built standby diesel generator will operate between rated and maximum nameplate load, and nameplate power factor for a time period required to reach engine temperature equilibrium.	Test report(s) demonstrate that each as-built standby diesel generator provides power at generator terminal rated voltage and frequency when fully loaded.
c. Each standby diesel generator fuel oil storage tank contains adequate fuel oil capacity for 7 days of standby diesel generator operation.	The as-built standby fuel oil storage tank capacity will be calculated.	Calculations show that the as-built standby fuel oil storage tank capacity is adequate to supply 7 days of fuel oil to the standby diesel generator under continuous operation

Table 2.13.4-2

ITAAC For The Onsite Diesel Generator Power Supply Systems

Design Commitment	Inspections, Tests, Analyses	Acceptance Criteria
d. Each of the standby diesel generator fuel oil transfer pumps (two pumps per engine) starts automatically and transfers fuel oil from the standby fuel oil storage tank to the standby diesel generator day tank at a rate greater than or equal to the usage rate of the standby diesel generator.	Testing will be performed to demonstrate that each as-built fuel oil transfer pump starts automatically and transfers fuel oil from the standby fuel oil storage tank to the standby diesel generator day tank at a rate greater than or equal to the usage rate of the standby diesel generator when operating between rated and maximum nameplate load.	Test report(s) demonstrate that that each as-built fuel oil transfer pump starts automatically and transfers fuel oil from the standby fuel oil storage tank to the standby diesel generator day tank at a rate greater than or equal to the usage rate of the standby diesel generator when running fully loaded.
e. Each of the standby diesel generator starting air receivers (two receivers per engine) is capable of starting the engine at its low pressure alarm setpoint.	Testing will be performed for each as-built starting air receiver.	Test report(s) demonstrate that each as-built starting air receiver is capable of starting the engine at its low pressure alarm setpoint.
f. Each of the standby diesel generator jacket cooling water systems controls the flow of water to maintain required water temperature.	Testing of standby diesel generator jacket cooling water system will be performed to demonstrate flow of water to maintain required water temperature.	A test report documents that the standby diesel generator jacket cooling water system demonstrates flow of water to maintain required water temperature.
g. Each standby diesel generator has instrumentation provided to monitor lube oil temperature, pressure and sump level, ensuring proper operation of the system.	Monitoring lube oil temperature, pressure and sump level during testing will demonstrate proper operation of the system.	A test report documents that monitoring lube oil temperature, pressure and sump level during testing demonstrates proper operation of the system.
h. Each standby diesel generator is provided with a separate intake and exhaust system.	Inspection of the as-built intake and exhaust system will be conducted.	Inspection report(s) document that each as-built DG is provided with a separate intake and exhaust system.

Table 2.13.4-2

ITAAC For The Onsite Diesel Generator Power Supply Systems

Design Commitment	Inspections, Tests, Analyses	Acceptance Criteria
3. The Standby Onsite Power Supply minimum inventory of alarms, displays, controls, and status indications in the main control room are addressed in Section 3.3.	See Section 3.3.	See Section 3.3.
4. The functional arrangement of the Ancillary Diesel Onsite Power Supply System is as described in Section 2.13.4	Inspections of the as-built system will be conducted.	Inspection report(s) document that the as-built Ancillary Diesel Onsite Power Supply System conforms with the functional arrangement as described in section 2.13.4.
5a. Upon receipt of an undervoltage signal from the Onsite AC Power System, the ancillary diesel generator starts, achieves rated speed and voltage, and produces a ready to load signal.	Tests of the as-built Ancillary Diesel Onsite Power Supply System will be conducted by providing a real or simulated undervoltage signal to start the ancillary diesel generators.	Test report(s) demonstrate that the as-built ancillary diesel generator starts upon receipt of a real or simulated undervoltage signal on its associated bus, achieves rated speed and voltage, and produces a ready to load signal.
b. Upon receipt of a low ancillary diesel room temperature signal, the ancillary diesel generator starts, achieves rated speed and voltage, and produces a ready to load signal.	Tests of the as-built Ancillary Diesel Onsite Power Supply System will be conducted by providing a real or simulated low ancillary diesel room temperature signal to start the ancillary diesel generators.	Test report(s) demonstrate that the as-built ancillary diesel generator starts upon receipt of a real or simulated low ancillary diesel room temperature signal, achieves rated speed and voltage, and produces a ready to load signal.
c. Each ancillary diesel generator is sized to accommodate its expected loads.	Each as-built ancillary diesel generator will be operated between rated and maximum nameplate load, and nameplate power factor for a time period required to reach engine temperature equilibrium.	Test report(s) demonstrate that each as-built ancillary diesel generator provides power at generator terminal rated voltage and frequency when fully loaded.

Table 2.13.4-2

ITAAC For The Onsite Diesel Generator Power Supply Systems

Design Commitment	Inspections, Tests, Analyses	Acceptance Criteria
d. Each ancillary diesel generator fuel oil storage tank contains adequate fuel oil capacity for 7 days of ancillary diesel generator operation.	The as-built fuel oil storage tank capacity will be calculated.	Analysis demonstrates that the as-built fuel oil storage tank capacity is adequate to supply 7 days of fuel oil to the ancillary diesel generator that is operating at rated load.
e. Each of the ancillary diesel generator fuel oil transfer pumps start automatically and transfer fuel oil from the ancillary fuel oil storage tank to the ancillary diesel generator day tank at a rate greater than or equal to the usage rate of the ancillary diesel generator.	Testing will be performed to demonstrate that each as-built fuel oil transfer pump starts automatically and transfers fuel oil from the ancillary fuel oil storage tank to the ancillary diesel generator day tank at a rate greater than or equal to the usage rate of the ancillary diesel generator when operating between rated and maximum nameplate load.	Test report(s) demonstrate that that each as-built fuel oil transfer pump starts automatically and transfers fuel oil from the ancillary fuel oil storage tank to the ancillary diesel generator day tank at a rate greater than or equal to the usage rate of the ancillary diesel generator when running fully loaded.
6. The Ancillary Diesel Onsite Power Supply System minimum inventory of alarms, displays, controls, and status indications are addressed in Section 3.3.	See Section 3.3.	See Section 3.3.

2.13.5 Uninterruptible AC Power Supply

Design Description

The Uninterruptible AC Power Supply (UPS) is divided into two subsystems, the safety-related UPS and the nonsafety-related UPS.

The nonsafety-related UPS system and the nonsafety-related Technical Support Center UPS system are not part of the plant safety design basis, and are independent and separated from the safety-related UPS system.

The safety-related UPS system provides four divisions of 120 VAC power to safety-related loads during normal, upset and accident conditions.

(1) The functional arrangement of the safety-related UPS system is as described in Subsection 2.13.5 and Table 2.13.5-1 and is as shown on Figure 2.13.5-1.

(2) The functional arrangement of the nonsafety-related UPS system is as described in Subsection 2.13.5 and as shown on Figure 2.13.5-2.

(3) The safety-related UPS system equipment identified in Table 2.13.5-1 conforms to Seismic Category I requirements and is housed in Seismic Category I structures.

(4) The safety-related UPS system provides four independent and redundant safety-related divisions.

(5) Separation is provided between safety-related divisions, and between safety-related divisions and nonsafety-related equipment, as required by Regulatory Guide 1.75.

(6) Each safety-related UPS inverter is capable of supplying its AC load.

(7) The Uninterruptible AC Power Supply minimum inventory of alarms, displays, controls, and status indications in the main control room are addressed in Section 3.3.

(8) Environmental qualification of the safety-related UPS system is addressed in DCD Tier 1 Section 3.8.

(9) The safety-related UPS rectifiers are designed to prevent their AC source from becoming a load on the 250 VDC safety-related batteries when the AC power source is de-energized or has degraded voltage.

Inspections, Tests, Analyses and Acceptance Criteria

Table 2.13.5-2 provides a definition of the inspections, tests, and/or analyses, together with associated acceptance criteria for the Uninterruptible AC Power Supply.

Table 2.13.5-1

System Equipment

Equipment Description	Location	Seismic Cat. I	Safety Related
Deleted			
Deleted			
Deleted			
Deleted			
Deleted			
Deleted			
Deleted			
Deleted			
Division 1 UPS 1-1	Reactor Building	Yes	Yes
Division 1 UPS 1-2	Reactor Building	Yes	Yes
Division 2 UPS 2-1	Reactor Building	Yes	Yes
Division 2 UPS 2-2	Reactor Building	Yes	Yes
Division 3 UPS 3-1	Reactor Building	Yes	Yes
Division 3 UPS 3-2	Reactor Building	Yes	Yes
Division 4 UPS 4-1	Reactor Building	Yes	Yes
Division 4 UPS 4-2	Reactor Building	Yes	Yes
Division 1 UPS Bus 11 Power Distribution Panel	Reactor Building	Yes	Yes
Deleted			
Division 2 UPS Bus 21	Reactor	Yes	Yes

Table 2.13.5-1

System Equipment

Equipment Description	Location	Seismic Cat. I	Safety Related
Power Distribution Panel	Building		
Deleted			
Division 3 UPS Bus 31 Power Distribution Panel	Reactor Building	Yes	Yes
Deleted			
Division 4 UPS Bus 41 Power Distribution Panel	Reactor Building	Yes	Yes
Deleted			

Table 2.13.5-2

ITAAC For The Uninterruptible AC Power Supply

Design Commitment	Inspections, Tests, Analyses	Acceptance Criteria
1. The functional arrangement of the safety-related UPS system is as described in Subsection 2.13.5 and Table 2.13.5-1 and is as shown on Figure 2.13.5-1.	Inspections of the as-built safety-related UPS system will be performed.	Inspection report(s) document that the as-built safety-related UPS system conforms with the functional arrangement as described in Subsection 2.13.5 and as shown in Figure 2.13.5-1.
2. The functional arrangement of the nonsafety-related UPS system is as described in Subsection 2.13.5 and as shown on Figure 2.13.5-2.	Inspections of the as-built nonsafety-related UPS system will be performed.	Inspection report(s) document that the as-built nonsafety-related UPS system conforms with the functional arrangement as described in Subsection 2.13.5 and as shown in Figure 2.13.5-2.

Table 2.13.5-2

ITAAC For The Uninterruptible AC Power Supply

Design Commitment	Inspections, Tests, Analyses	Acceptance Criteria
3. The safety-related UPS system equipment identified in Table 2.13.5-1 conforms to Seismic Category I requirements, and is housed in Seismic Category I structures.	i) Type tests and/or analyses of the safety-related UPS system seismic Category I equipment will be performed. ii) Inspections of the as-built safety-related UPS system will be performed to verify that the equipment is installed in accordance with the configurations specified in the type tests and/or analyses. iii) Inspections of the as-built safety-related UPS system will be performed to verify that the equipment is housed in Seismic Category I structures.	i) Test report(s)and/or analyses conclude that the as-built safety-related UPS system conforms to Seismic Category I requirements. ii) Inspection report(s) document that the as-built safety-related UPS system equipment is installed in accordance with the configurations specified by the type tests and/or analyses. iii) Inspection report(s) document that the seismic Category 1 equipment identified in Table 2.13.5-1 is housed in Seismic Category I structures.
4. The safety-related UPS system provides four independent and redundant safety-related divisions.	Tests will be performed on the as-built safety-related UPS system by providing a test signal in only one safety-related division at a time.	i) Test report(s) demonstrate that a test signal exists only in the safety-related division under test in the as-built safety-related UPS system. ii) Test report(s) demonstrate that a test signal originating from the as-built divisional safety-related UPS distribution panel exists at the terminals of its divisional safety-related loads.

Table 2.13.5-2

ITAAC For The Uninterruptible AC Power Supply

Design Commitment	Inspections, Tests, Analyses	Acceptance Criteria
5. Separation is provided between safety-related divisions, and between safety-related divisions and nonsafety-related equipment, as required by Regulatory Guide 1.75.	Inspection of the as-built safety-related UPS system will be performed.	Inspection report(s) document that, in the as-built safety-related UPS system, physical separation and electrical isolation exists between safety–related divisions, as required by Regulatory Guide 1.75. Physical separation and electrical isolation exists between safety-related divisions and nonsafety-related equipment, as required by Regulatory Guide 1.75.
6. Each safety-related UPS inverter is capable of supplying its AC load.	Testing of each as-built safety-related UPS inverter will be performed by applying a combination of simulated and/or real loads.	Test report(s) document that the as-built safety-related UPS inverter supplies its rated load while maintaining its rated voltage at its rated frequency.
7. The Uninterruptible AC Power Supply minimum inventory of alarms, displays, controls, and status indications in the main control room are addressed in Section 3.3.	See Section 3.3.	See Section 3.3.
8. Environmental qualification of the safety-related UPS system is addressed in Section 3.8.	See Section 3.8.	See Section 3.8.
9. The safety-related UPS rectifiers are designed to prevent their AC source from becoming a load on the 250 VDC safety-related batteries when the AC power source is de-energized or has degraded voltage.	Testing of the each safety-related rectifier will be performed to demonstrate that there is no power feedback from a loss of AC input power.	Test report(s) document that the safety-related rectifiers prevent the AC input source from becoming a load on the 250 VDC safety-related batteries during a loss of AC power condition.

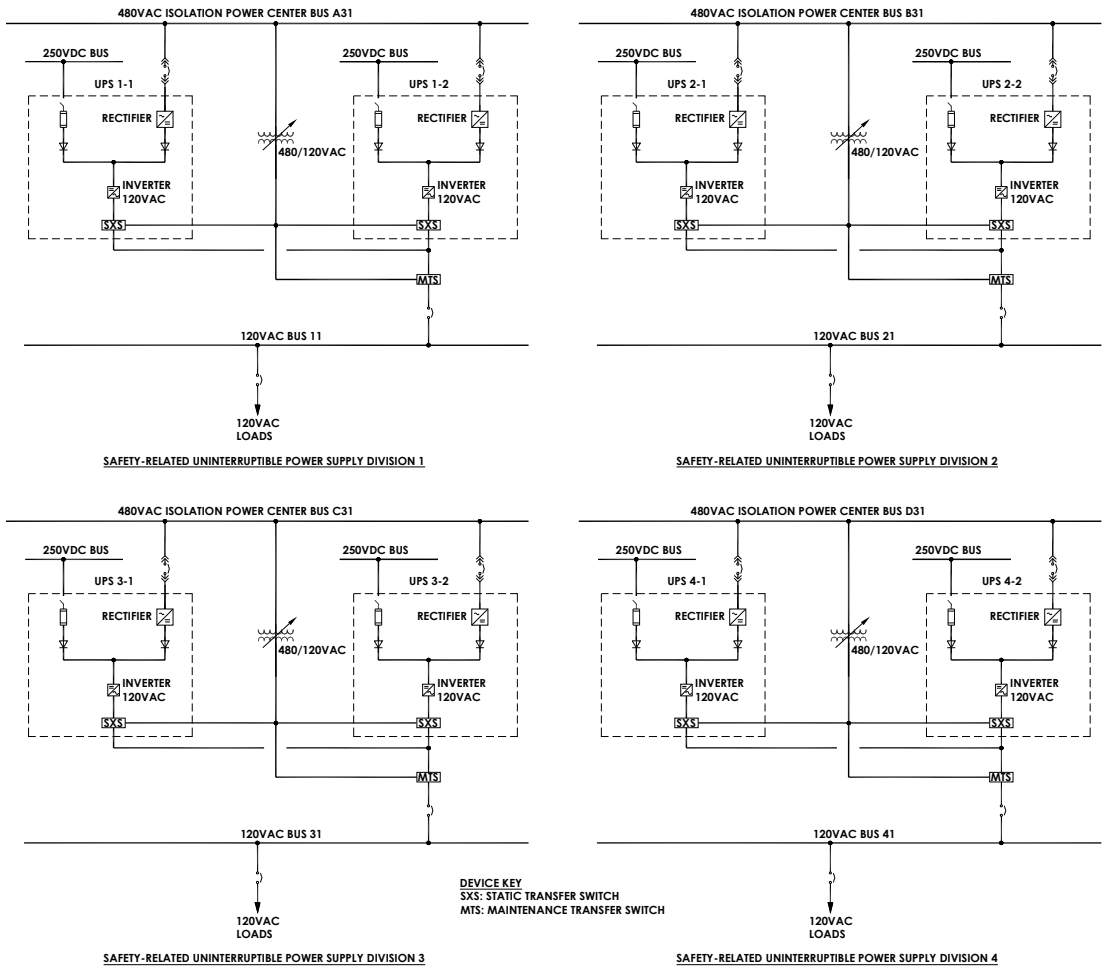

Figure 2.13.5-1.
Safety-Related UPS System Functional Arrangement

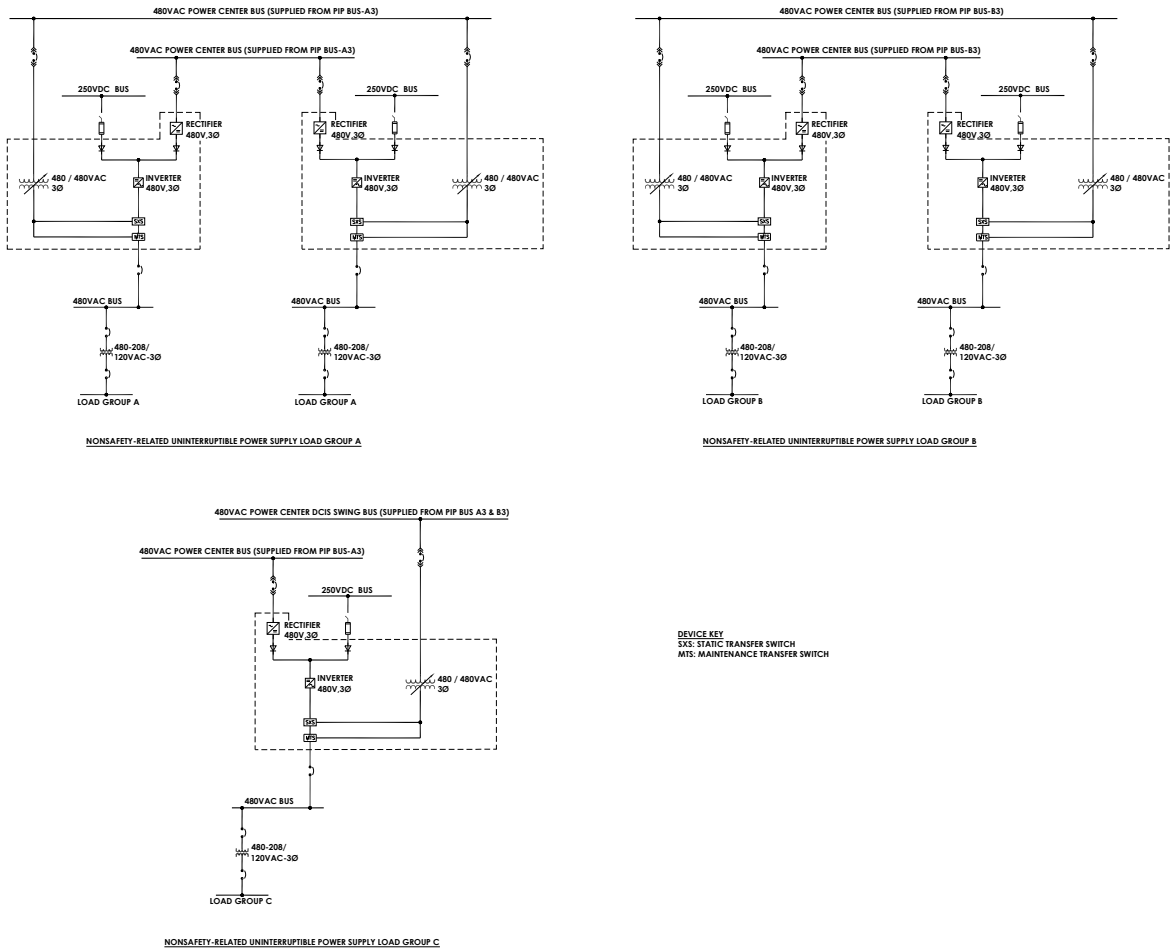

Figure 2.13.5-2. Sh 1
Nonsafety-Related UPS System Functional Arrangement

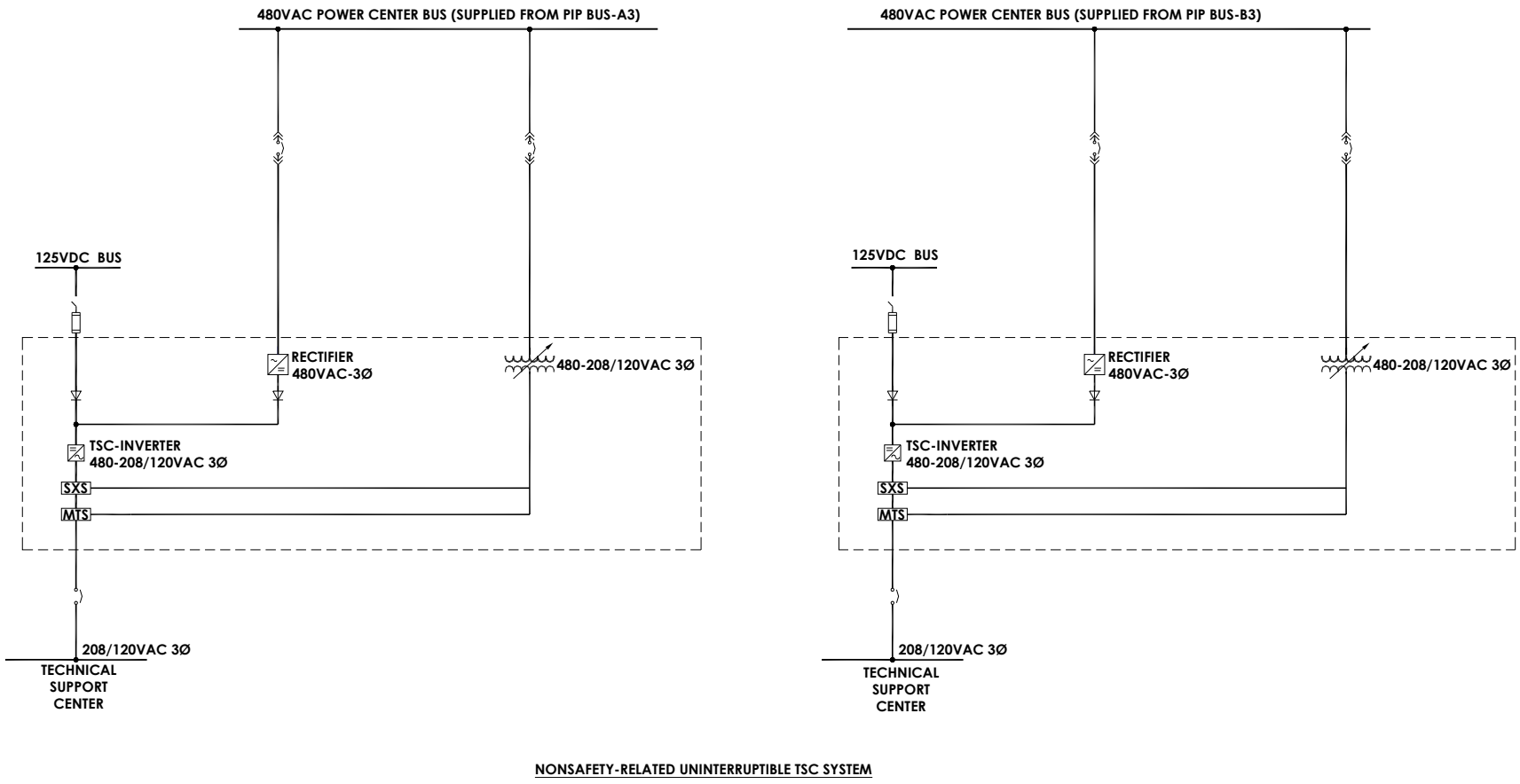

Figure 2.13.5-2 Sh 2
Nonsafety-Related UPS System Functional Arrangement

2.13.6 (Deleted)

2.13.7 Communication System

Design Description

No ITAAC are required for this system

Inspections, Tests, Analyses and Acceptance Criteria

No ITAAC are required for this system.

Table 2.13.7-1

Deleted

Design Commitment	Inspections, Tests, Analyses	Acceptance Criteria
1. Deleted		

2.13.8 Lighting Power Supply

Design Description

The plant lighting systems furnish the illumination required for safe performance of plant operation, security, shutdown, and maintenance activities. The lighting systems include the Control Room and Remote Shutdown Station (RSS) Emergency Lighting System , normal, standby, and DC self-contained battery operated emergency lighting. The security lighting system is described in separate security documents.

(1) The functional arrangement of Control Room and RSS Emergency Lighting System is as described in the Design Description of this Subsection 2.13.8.

(2) The Control Room and RSS Emergency Lighting System meets Seismic Category I requirements for mountings.

(3) The Control Room and RSS Emergency Lighting System is electrically independent and physically separated. Cables are routed in the respective divisional raceways.

(4) The Control Room and RSS Emergency Lighting system provides illumination levels in the main control room equal to or greater than those recommended by the Illuminating Engineering Society of North America (IESNA) for at least 72 hours following a design basis accident and a loss of all AC power sources.

(5) The DC Self-Contained Battery-Operated Lighting Units system provides illumination levels equal to or greater than those recommended by the IESNA in the remote shutdown rooms and in those areas of the plant required for power restoration and/or recovery from a fire, for at least 8 hours.

(6) Electrical isolation of the nonsafety-related Control Room and RSS emergency lighting circuits from the safety-related Uninterruptible AC power supply is accomplished by the use of two series isolation devices.

Inspections, Tests, Analyses and Acceptance Criteria

Table 2.13.8-1 provides a definition of the inspections, tests, and/or analyses, together with associated acceptance criteria for the Control Room and RSS Emergency Lighting Power Supply.

Table 2.13.8-1

ITAAC For The Lighting Power Supply

Design Commitments	Inspections, Tests, Analyses	Acceptance Criteria
1. The functional arrangement of Control Room and RSS Emergency Lighting System is as described in the Design Description of this Section 2.13.8.	Inspections of the as-built system will be conducted.	Inspection report(s) document that the as-built Control Room and RSS Emergency Lighting System conforms with the functional arrangement as described in the Design Description of this Section 2.13.8.
2. The Control Room and RSS Emergency Lighting System meets Seismic Category I requirements for mountings.	Analysis of the Control Room and RSS Emergency Lighting System mountings and inspection of the as-built system will be performed.	Analysis and inspection report(s) exist and document that the Control Room and RSS Emergency Lighting System mountings meet Seismic Category I requirements..
3. The Control Room and RSS Emergency Lighting System is electrically independent and physically separated. Cables are routed in the respective divisional raceways.	Inspection of the as-built Control Room and RSS Emergency Lighting System will be performed.	Inspection report(s) document that the as-built Control Room and RSS Emergency Lighting System equipment and cables are electrically independent and physically separated between safety divisions and between safety-related divisions and nonsafety-related equipment.
4. The Control Room and RSS Emergency Lighting system provides illumination levels in the main control room equal to or greater than those recommended by the IESNA for at least 72 hours following a design basis accident and a loss of all AC power sources.	Testing of the as-built Control Room and RSS Emergency Lighting System in the main control room and RSS will be performed.	Test report(s) demonstrate that the as-built Control Room and RSS Emergency Lighting System provides the illumination required by the IESNA at the main control room control stations for at least 72 hours following a design basis accident and a loss of all AC power sources.

Table 2.13.8-1

ITAAC For The Lighting Power Supply

Design Commitments	Inspections, Tests, Analyses	Acceptance Criteria
5. The DC Self-Contained Battery-Operated Lighting Units system provides illumination levels equal to or greater than those recommended by the IESNA in the remote shutdown rooms and in areas of the plant required for power restoration and/or recovery from a fire, for at least 8 hours.	Testing of the as-built DC Self-Contained Battery-Operated Lighting Units System will be performed.	Test report(s) demonstrate that each division of the as-built DC Self-Contained Battery-Operated Lighting Units System provides the illumination required by the IESNA in the remote shutdown rooms and in areas of the plant required for power restoration / recovery from a fire to comply with the requirement of RG 1.189. Each unit will provide 8 hours of continuous illumination without battery recharge.
6. Electrical isolation of the nonsafety-related Control Room and RSS emergency lighting circuits from the safety-related Uninterruptible AC power supply is accomplished by the use of two series isolation devices.	Inspection of the as-built system will be conducted to verify that the non-safety-related control room and RSS emergency lighting and the safety-related Uninterruptible AC power supply are isolated by two series isolation devices.	Inspection report(s) documents that the non-safety-related control room and RSS emergency lighting and the safety-related Uninterruptible AC Power Supply are isolated by two series isolation devices.

2.14 POWER TRANSMISSION

No ITAAC are required for this system.

2.15 CONTAINMENT, COOLING AND ENVIRONMENTAL CONTROL SYSTEMS

2.15.1 Containment System

Design Description

The Containment System confines the potential release of radioactive material in the event of a design basis accident. The Containment System is comprised of a reinforced concrete containment vessel (RCCV), penetrations and DW head.

The Containment System is as shown in Figure 2.15.1-1. The RCCV is located in the Reactor Building.

(1) The functional arrangement of the Containment System is as described in the Design Description of this Section 2.15.1 and as shown in Figure 2.15.1-1.

(2)

2.a.i. The components identified in Table 2.15.1-1 as ASME Code Section III are designed in accordance with ASME Code Section III requirements and seismic Category I requirements.

2.a.ii. The RCCV and its liners are designed to meet the requirements in Article CC-3000 of ASME Code, Section III, Division 2, and seismic Category I requirements. The steel components of the RCCV are designed to meet the requirements in Article NE-3000 of ASME Code, Section III, Division 1, and seismic Category I requirements.

2.a.iii. The piping identified in Table 2.15.1-1 as ASME Code Section III is designed in accordance with ASME Code Section III requirements and seismic Category I requirements.

2.b.i. The design of the components identified in Table 2.15.1-1 as ASME Code Section III will be reconciled with thedesign requirements.

2.b.ii. The RCCV and its liners are designed to meet the requirements in Article CC-3000 of ASME Code, Section III, Division 2, and seismic Category I requirements. The steel components of the RCCV are designed to meet the requirements in Article NE-3000 of ASME Code, Section III, Division 1, and seismic Category I requirements. The design of these components will be reconciled with the design requirements.

2.b.iii. The as-built piping identified in Table 2.15.1-1 as ASME Code Section III shall be reconciled with the piping design requirements.

2.c.i. The components identified in Table 2.15.1-1 as ASME Code Section III are fabricated, installed, and inspected in accordance with ASME Code Section III requirements.

2.c.ii. The RCCV and its liners are fabricated, installed, and inspected in accordance with the requirements in Article CC-3000 of ASME Code, Section III, Division 2. The steel components of the RCCV are designed to meet the requirements in Article NE-3000 of ASME Code, Section III, Division 1.

2.c.iii. The piping identified in Table 2.15.1-1 as ASME Code Section III is, fabricated, installed, and inspected in accordance with ASME Code Section III requirements.

(3) Pressure Boundary Welds

a. Pressure boundary welds in components identified in Tables 2.15.1-1a and 2.15.1-1b as ASME Code Section III meet ASME Code Section III requirements.

b. Pressure boundary welds in piping identified in Tables 2.15.1-1a and 2.15.1-1b as ASME Code Section III meet ASME Code Section III requirements.

(4) The components and piping identified in Tables 2.15.1-1a and 2.15.1-1b as ASME Code Section III retain their pressure boundary integrity at their design pressure.

(5) The seismic Category I equipment identified in Tables 2.15.1-1a, 2.15.1-1b, and 2.15.1-1c can withstand design basis load without loss of structural integrity and safety function.

(6) The equipment qualification of Containment Systems components is addressed in Section 3.8.

a. The electrical safety-related components associated with actuation and status monitoring of final control elements of the Containment System components listed in Tables 2.15.1-1a, 2.15.1-1b, and 2.15.1-1c are powered from their respective safety-related division.

b. Separate electrical penetrations are provided for circuits of each safety-related division and for nonsafety-related circuits.

c. The circuits of each electrical penetration are of the same voltage class.

(7) The containment system provides a barrier against the release of fission products to the atmosphere.

(8) The containment system pressure boundary retains its structural integrity when subject to design pressure.

(9) The containment system provides the safety-related function of containment isolation for containment boundary integrity.

(10) Containment electrical penetration assemblies, whose maximum available fault current (including failure of upstream devices) is greater than the continuous rating of the penetration, are protected against currents that are greater than the continuous ratings.

(11) The minimum set of displays, alarms and controls, based on the emergency procedure guidelines and important operator actions, is available in the main control room

(12) The amount of chlorine bearing cable insulation exposed to the containment atmosphere is limited.

(13) The DW and wetwell (WW) volumes are adequately sized to accommodate the calculated maximum DW temperature and absolute pressure that are postulated to occur as a result of a design basis accident

(14) The water volume of the WW is adequately sized to condense the steam that is forced into the WW from the DW due to a postulated pipe break.

(15) Each vacuum breaker isolation valve automatically closes if the vacuum breaker does not fully close when required.

(16) Vacuum Breaker

a. Each vacuum breaker has proximity sensors to detect open/close position. This indication is available in the main control room.

b. Each vaccum breaker has temperature sensors to detect bypass leakage. This indication is available in the main control room.

(17) The containment penetration isolation design for each fluid piping system requiring isolation meets the single-failure criterion to ensure completion of penetration isolation.

(18) DW to WW bypass leakage is less than the assumed value used in the containment capability design basis containment response analysis.

(19) Total DW to WW vacuum breaker bypass pathway leakage is less than the assumed value used in the containment capability design basis containment response analysis.

(20) Each vaccum breaker opening differential pressure is less than or equal to the required opening differential pressure.

(21) Each vacuum breaker closing differential pressure is greater than or equal to the required closing differential pressure.

Inspections, Tests, Analyses and Acceptance Criteria

Table 2.15.1-2 provides a definition of the inspections, tests, and/or analyses, together with associated acceptance criteria for the Containment System.

Table 2.15.1-1a

Containment System Penetrations and Equipment

Equipment Name	ASME Code Section III	Seismic Cat. I	Remote Manual Operation	Safety-Related	Containment Isolation Signal	Normal Position	Post-Accident Position	Loss of Motive Power Position
Nuclear Boiler								
Inboard main steam isolation valve (MSIV) (4 valves)	Yes	Yes	Yes	Yes	Yes	open	closed	closed
Outboard main steam isolation valve (MSIV) (4 valves)	Yes	Yes	Yes	Yes	Yes	open	closed	closed
Inboard MSIV upstream drain line inboard containment isolation valve (1 valve)	Yes	Yes	Yes	Yes	Yes	open	closed	closed
Inboard MSIV upstream drain line outboard containment isolation valve (1 valve)	Yes	Yes	Yes	Yes	Yes	open	closed	closed
Outboard MSIV upstream drain line outboard containment isolation valve (4 valves)	Yes	Yes	Yes	Yes	Yes	open	open/closed	closed
FW supply line second outboard containment isolation valve (2 valves)	Yes	Yes	Yes	Yes	Yes	open	closed	closed
FW supply line outboard containment isolation valve (2 valves)	Yes	Yes	Yes	Yes	Yes	open	closed	closed
FW supply line inboard containment isolation valve (2 valves)	Yes	Yes	No	Yes	No	open	open/closed	N/A
RWCU/SDC to Feedwater outboard containment isolation valve (2 valves)	Yes	Yes	No	Yes	No	open	open/closed	open
Isolation Condenser								
Steam supply line isolation valve (4 valves)	Yes	Yes	Yes	Yes	Yes	open	open/closed	as-is

Table 2.15.1-1a

Containment System Penetrations and Equipment

Equipment Name	ASME Code Section III	Seismic Cat. I	Remote Manual Operation	Safety-Related	Containment Isolation Signal	Normal Position	Post-Accident Position	Loss of Motive Power Position
Steam supply line isolation valve (4 valves)	Yes	Yes	Yes	Yes	Yes	open	open/closed	as-is
Condensate return line isolation valve (4 valves)	Yes	Yes	Yes	Yes	Yes	open	open/closed	as-is
Condensate return line isolation valve (4 valves)	Yes	Yes	Yes	Yes	Yes	open	open/closed	as-is
Condenser upper header vent valve (4 valves)	Yes	Yes	Yes	Yes	No	closed	closed	closed
Condenser upper header vent valve (4 valves)	Yes	Yes	Yes	Yes	No	closed	closed	closed
Condenser lower header vent valve (4 valves)	Yes	Yes	Yes	Yes	No	closed	closed	closed
Condenser lower header vent valve (4 valves)	Yes	Yes	Yes	Yes	No	closed	closed	closed
Bypass lower header vent valve (4 valves)	Yes	Yes	No	Yes	No	closed	open/closed	N/A
Bypass lower header vent valve (4 valves)	Yes	Yes	Yes	Yes	No	closed	open/closed	open
Condenser purge line isolation valve (4 valves)	Yes	Yes	Yes	Yes	Yes	open	open/closed	closed
Condenser purge line isolation valve (4 valves)	Yes	Yes	No	Yes	No	open	open	N/A
Standby Liquid Control								
SLC injection line squib valve (4 valves)	Yes	Yes	No	Yes	No	closed	open	as-is
SLC injection line outboard check valve (2 valves)	Yes	Yes	No	Yes	No	closed	open/closed	N/A

Table 2.15.1-1a

Containment System Penetrations and Equipment

Equipment Name	ASME Code Section III	Seismic Cat. I	Remote Manual Operation	Safety-Related	Containment Isolation Signal	Normal Position	Post-Accident Position	Loss of Motive Power Position
SLC injection line inboard check valve (2 valves)	Yes	Yes	No	Yes	No	closed	open/closed	N/A
Process Radiation Monitoring								
DW Fission Product Monitoring Line lnboard isolation Valve (1 valve)	Yes	Yes	Yes	Yes	Yes	open	open	as-is
DW Fission Product Monitoring Line Outboard isolation Valve (1 valve)	Yes	Yes	Yes	Yes	Yes	open	open	as-is
DW Fission Product Monitoring Line Inboard isolation Valve (1 valve)	Yes	Yes	Yes	Yes	Yes	open	open	as-is
DW Fission Product Monitoring Line Outboard isolation Valve (1 valve)	Yes	Yes	Yes	Yes	Yes	open	open	as-is
Fuel and Auxiliary Pools Cooling								
Reactor well drain line containment isolation valve (1 valve)	Yes	Yes	No	Yes	No	closed	closed	N/A
Reactor well drain line containment isolation valve (1 valve)	Yes	Yes	No	Yes	No	closed	closed	N/A
GDCS pool return line outboard isolation valve (1 valve)	Yes	Yes	Yes	Yes	Yes	closed	closed	closed
GDCS pool return line inboard isolation check valve (1 valve)	Yes	Yes	No	Yes	No	closed	closed	N/A
Suppression pool return line outboard isolation valve (2 valves)	Yes	Yes	Yes	Yes	No	closed	closed	as-is

Table 2.15.1-1a

Containment System Penetrations and Equipment

Equipment Name	ASME Code Section III	Seismic Cat. I	Remote Manual Operation	Safety-Related	Containment Isolation Signal	Normal Position	Post-Accident Position	Loss of Motive Power Position
Suppression pool return line inboard isolation check valve (2 valves)	Yes	Yes	No	Yes	No	closed	closed	N/A
DW spray line outboard isolation valve (1 valve)	Yes	Yes	Yes	Yes	No	closed	closed	closed
DW spray line inboard isolation check valve (1 valve)	Yes	Yes	No	Yes	No	closed	closed	N/A
Suppression pool suction line outboard isolation valve (2 valves)	Yes	Yes	Yes	Yes	No	closed	closed	as-is
Suppression pool suction line outboard isolation valve (2 valves)	Yes	Yes	Yes	Yes	No	closed	closed	as-is
GDCS pool suction line inboard isolation valve (1 valve)	Yes	Yes	Yes	Yes	Yes	closed	closed	closed
GDCS pool suction line outboard isolation valve (1 valve)	Yes	Yes	Yes	Yes	Yes	closed	closed	closed
Reactor Water Cleanup/Shutdown Cooling								
RWCU/SDC mid-vessel suction line inboard isolation valve (2 valves)	Yes	Yes	Yes	Yes	Yes	open	closed	closed
RWCU/SDC mid-vessel suction line outboard isolation valve (2 valves)	Yes	Yes	Yes	Yes	Yes	open	closed	closed
RWCU/SDC bottom head suction line inboard isolation valve (2 valves)	Yes	Yes	Yes	Yes	Yes	open	closed	closed
RWCU/SDC bottom head suction line outboard isolation valve (2 valves)	Yes	Yes	Yes	Yes	Yes	open	closed	closed

Table 2.15.1-1a

Containment System Penetrations and Equipment

Equipment Name	ASME Code Section III	Seismic Cat. I	Remote Manual Operation	Safety-Related	Containment Isolation Signal	Normal Position	Post-Accident Position	Loss of Motive Power Position
RWCU/SDC bottom head suction line sample line inboard isolation valve (2 valves)	Yes	Yes	Yes	Yes	Yes	closed	open/closed	closed
RWCU/SDC bottom head suction line sample line outboard isolation valve (2 valves)	Yes	Yes	Yes	Yes	Yes	closed	open/closed	closed
Chilled Water								
Chilled water supply line to DW cooler outboard isolation valve (2 valves)	Yes	Yes	Yes	Yes	Yes	open	closed	closed
Chilled water supply line to DW cooler inboard isolation valve (2 valves)	Yes	Yes	Yes	Yes	Yes	open	closed	closed
Chilled water return line from DW cooler inboard isolation valve (2 valves)	Yes	Yes	Yes	Yes	Yes	open	closed	closed
Chilled water return line from DW cooler outboard isolation valve (2 valves)	Yes	Yes	Yes	Yes	Yes	open	closed	closed
Makeup Water								
Demin water DW distribution system outboard containment isolation valve (1 valve)	Yes	Yes	No	Yes	No	closed	closed	N/A
Demin water DW distribution system inboard containment isolation valve (1 valve)	Yes	Yes	No	Yes	No	closed	closed	N/A

Table 2.15.1-1a

Containment System Penetrations and Equipment

Equipment Name	ASME Code Section III	Seismic Cat. I	Remote Manual Operation	Safety-Related	Containment Isolation Signal	Normal Position	Post-Accident Position	Loss of Motive Power Position
Service Air								
Service air system inboard containment isolation valve (1 valve)	Yes	Yes	No	Yes	No	closed	closed	N/A
Service air system outboard containment isolation valve (1 valve)	Yes	Yes	No	Yes	No	closed	closed	N/A
High Pressure Nitrogen Gas Supply								
N2 supply line outboard isolation valve to ADS, SRV and ICIV accumulator (1 valve)	Yes	Yes	Yes	Yes	Yes	open	closed	closed
N2 supply line inboard isolation check valve to ADS, SRV and ICIV accumulator (1 valve)	Yes	Yes	No	Yes	No	open/closed	closed	N/A
N2 supply line outboard isolation valve to MSIV and other uses (1 valve)	Yes	Yes	Yes	Yes	Yes	open	closed	closed
N2 supply line inboard check valve to MSIV and other uses (1 valve)	Yes	Yes	No	Yes	No	open/closed	closed	N/A
Containment Inerting								
Air/N2 supply line to suppression pool outboard isolation valve (1 valve)	Yes	Yes	Yes	Yes	Yes	closed	closed	closed
Air/N2 supply line to outboard isolation valve (1 valve)	Yes	Yes	Yes	Yes	Yes	closed	closed	closed
Air/N2 supply line to upper DW outboard isolation valve (1 valve)	Yes	Yes	Yes	Yes	Yes	closed	closed	closed

Table 2.15.1-1a

Containment System Penetrations and Equipment

Equipment Name	ASME Code Section III	Seismic Cat. I	Remote Manual Operation	Safety-Related	Containment Isolation Signal	Normal Position	Post-Accident Position	Loss of Motive Power Position
Lower DW exhaust line outboard isolation valve (1 valve)	Yes	Yes	Yes	Yes	Yes	closed	closed	closed
Containment atmospheric exhaust line outboard isolation valve (1 valve)	Yes	Yes	Yes	Yes	Yes	closed	closed	closed
Suppression pool exhaust line outboard isolation valve (1 valve)	Yes	Yes	Yes	Yes	Yes	closed	closed	closed
Suppression pool exhaust line to Stack outboard isolation valve (1 valve)	Yes	Yes	Yes	Yes	Yes	closed	closed	closed
Containment atmospheric bleed line outboard isolation valve (1 valve)	Yes	Yes	Yes	Yes	Yes	closed	closed	closed
Containment atmospheric bleed line outboard isolation valve (1 valve)	Yes	Yes	Yes	Yes	Yes	closed	closed	closed
Suppression pool exhaust line to Stack outboard isolation valve (1 valve)	Yes	Yes	Yes	Yes	Yes	closed	closed	closed
N2 makeup line outboard isolation valve (1 valve)	Yes	Yes	Yes	Yes	Yes	open	closed	closed
N2 makeup line to suppression pool outboard isolation valve (1 valve)	Yes	Yes	Yes	Yes	Yes	open	closed	closed
N2 makeup line to upper DW outboard isolation valve (1 valve)	Yes	Yes	Yes	Yes	Yes	open	closed	closed
Containment Monitoring								
DW to Sample Rack (2 valves)	Yes	Yes	Yes	Yes	Yes	open	open	open
DW to Sample Rack (2 valves)	Yes	Yes	Yes	Yes	Yes	open	open	open

Table 2.15.1-1a

Containment System Penetrations and Equipment

Equipment Name	ASME Code Section III	Seismic Cat. I	Remote Manual Operation	Safety-Related	Containment Isolation Signal	Normal Position	Post-Accident Position	Loss of Motive Power Position
Gas Sample Return to Containment (2 valves)	Yes	Yes	Yes	Yes	Yes	open	open	open
Gas Sample Return to WW (2 valves)	Yes	Yes	Yes	Yes	Yes	open	open	open
Gas Sample Return to DW (2 valves)	Yes	Yes	Yes	Yes	Yes	open	open	open
Gas Sample Return to WW (2 valves)	Yes	Yes	Yes	Yes	Yes	open	open	open
Gas Sample Return to DW (2 valves)	Yes	Yes	Yes	Yes	Yes	open	open	open
Gas Sample Return from Containment to Sample (2 valves)	Yes	Yes	Yes	Yes	Yes	open	open	open
Isolation to Skid for CAM Sample (2 valves)	Yes	Yes	Yes	Yes	Yes	open	open	open
Isolation for Gas Sample Return to Containment (1 valve)	Yes	Yes	Yes	Yes	Yes	open	open	open
Isolation for Gas Sample Return to Containment (1 valve)	Yes	Yes	Yes	Yes	Yes	open	open	open
RCCW Supply to CMS Skid (1 valve)	Yes	Yes	Yes	Yes	Yes	open	open	open
RCCW Supply to CMS Skid (1 valve)	Yes	Yes	Yes	Yes	Yes	open	open	open
RCCW Return from CMS Skid (1 valve)	Yes	Yes	Yes	Yes	Yes	open	open	open
RCCW Return from CMS Skid (1 valve)	Yes	Yes	Yes	Yes	Yes	open	open	open
Liquid Sample Return to Suppression Pool (1 valve)	Yes	Yes	Yes	Yes	Yes	open	open	open

Table 2.15.1-1a

Containment System Penetrations and Equipment

Equipment Name	ASME Code Section III	Seismic Cat. I	Remote Manual Operation	Safety-Related	Containment Isolation Signal	Normal Position	Post-Accident Position	Loss of Motive Power Position
Equipment and Floor Drain								
DW equipment drain (LCW) sump discharge line inboard isolation valve (1 valve)	Yes	Yes	Yes	Yes	Yes	closed	closed	closed
DW equipment drain (LCW) sump discharge line outboard isolation valve (1 valve)	Yes	Yes	Yes	Yes	Yes	closed	closed	closed
DW floor drain (HCW) sump discharge line inboard isolation valve (1 valve)	Yes	Yes	Yes	Yes	Yes	closed	closed	closed
DW floor drain (HCW) sump discharge line outboard isolation valve (1 valve)	Yes	Yes	Yes	Yes	Yes	closed	closed	closed

Table 2.15.1-1b

Containment Mechanical Equipment

Equipment Name (Description)	Equipment Identifier See Figure 2.15.1-1	ASME Code Section III	Seismic Cat. I	RCPB Component	Containment Isolation Valve	Remotely Operated	Loss of Motive Power Position	MCR Alarms
Vacuum Breaker	11(A)	Yes	Yes	No	No	-	-	Yes
Vacuum Breaker Isolation Valve	11.a(A)	Yes	Yes	No	No	Yes	As-is	Yes
Vacuum Breaker	11(B)	Yes	Yes	No	No	-	-	Yes
Vacuum Breaker Isolation Valve	11.a(B)	Yes	Yes	No	No	Yes	As-is	Yes
Vacuum Breaker	11(C)	Yes	Yes	No	No	-	-	Yes
Vacuum Breaker Isolation Valve	11.a(C)	Yes	Yes	No	No	Yes	As-is	Yes
Suppression Pool Stainless Steel Liner	N/A	Yes	Yes	No	No	No	-	-

Note: A dash means not applicable.

Table 2.15.1-1c

Electrical Equipment

Equipment Name (Description)	Equipment Identifier See Figure 2.15.1-1	Control Q-DCIS/ DPS	Seismic Category I	Safety-Related	Safety-Related Display	Active Safety Function	Remotely Operated	Containment Isolation Valve Actuator
Vacuum Breaker	11(A)	-	Yes	Yes	Yes	Open/Close	No	No
Vacuum Breaker Isolation Valve	11a(A)	Note 1	Yes	Yes	Yes	Open/Close	Yes	No
Vacuum Breaker	11(B)	-	Yes	Yes	Yes	Open/Close	No	No
Vacuum Breaker Isolation Valve	11a(B)	Note 1	Yes	Yes	Yes	Open/Close	Yes	No
Vacuum Breaker	11(C)	-	Yes	Yes	Yes	Open/Close	No	No
Vacuum Breaker Isolation Valve	11a(C)	Note 1	Yes	Yes	Yes	Open/Close	Yes	No
Containment System Logic Controllers	-	Note 1	Yes	Yes	Yes	Open/Close Vacuum Breaker Isolation Valves on signals	Yes	No

Notes:

1. Safety-related control provided by control system independent of Q-DCIS and DPS

Table 2.15.1-1d

Containment System Penetration Isolation Valve Closure Times

Equipment Name	Closure Time (sec)[1]
Nuclear Boiler	
Inboard main steam isolation valve (MSIV) (4 valves)	3 - 5 sec
Outboard main steam isolation valve (MSIV) (4 valves)	3 - 5 sec
Inboard MSIV upstream drain line inboard containment isolation valve (1 valve)	15 sec max
Inboard MSIV upstream drain line outboard containment isolation valve (1 valve)	15 sec max
Outboard MSIV upstream drain line outboard containment isolation valve (4 valves)	15 sec max
FW supply line second outboard containment isolation valve (2 valves)	10 - 15 sec
FW supply line outboard containment isolation valve (2 valves)	10 - 15 sec
FW supply line inboard containment isolation valve (2 valves)	N/A
RWCU/SDC to Feedwater outboard containment isolation valve (2 valves)	N/A
Isolation Condenser	
Steam supply line isolation valve (4 valves)	60 sec max
Steam supply line isolation valve (4 valves)	60 sec max
Condensate return line isolation valve (4 valves)	35 sec max
Condensate return line isolation valve (4 valves)	35 sec max
Condenser upper header vent valve (4 valves)	15 sec max
Condenser upper header vent valve (4 valves)	15 sec max
Condenser lower header vent valve (4 valves)	15 sec max
Condenser lower header vent valve (4 valves)	15 sec max
Bypass lower header vent valve (4 valves)	N/A
Bypass lower header vent valve (4 valves)	15 sec max

Table 2.15.1-1d

Containment System Penetration Isolation Valve Closure Times

Equipment Name	Closure Time (sec)[1]
Condenser purge line isolation valve (4 valves)	15 sec max
Condenser purge line isolation valve (4 valves)	N/A
Standby Liquid Control	
SLC injection line squib valve (4 valves)	N/A
SLC injection line outboard check valve (2 valves)	N/A
SLC injection line inboard check valve (2 valves)	N/A
Process Radiation Monitoring	
DW Fission Product Monitoring Line lnboard isolation Valve (1 valve)	5 sec max
DW Fission Product Monitoring Line Outboard isolation Valve (1 valve)	5 sec max
DW Fission Product Monitoring Line Inboard isolation Valve (1 valve)	5 sec max
DW Fission Product Monitoring Line Outboard isolation Valve (1 valve)	5 sec max
Fuel and Auxiliary Pools Cooling	
Reactor well drain line containment isolation valve (1 valve)	N/A
Reactor well drain line containment isolation valve (1 valve)	N/A
GDCS pool return line outboard isolation valve (1 valve)	30 sec max
GDCS pool return line inboard isolation check valve (1 valve)	N/A
Suppression pool return line outboard isolation valve (2 valves)	30 sec max
Suppression pool return line inboard isolation check valve (2 valves)	N/A
DW spray line outboard isolation valve (1 valve)	35 sec max
DW spray line inboard isolation check valve (1 valve)	N/A
Suppression pool suction line outboard isolation valve (2 valves)	30 sec max
Suppression pool suction line outboard isolation valve (2 valves)	30 sec max

Table 2.15.1-1d

Containment System Penetration Isolation Valve Closure Times

Equipment Name	Closure Time (sec)[1]
GDCS pool suction line inboard isolation valve (1 valve)	30 sec max
GDCS pool suction line outboard isolation valve (1 valve)	30 sec max
Reactor Water Cleanup/Shutdown Cooling	
RWCU/SDC mid-vessel suction line inboard isolation valve (2 valves)	20 sec max
RWCU/SDC mid-vessel suction line outboard isolation valve (2 valves)	20 sec max
RWCU/SDC bottom head suction line inboard isolation valve (2 valves)	15 sec max
RWCU/SDC bottom head suction line outboard isolation valve (2 valves)	15 sec max
RWCU/SDC bottom head suction line sample line inboard isolation valve (2 valves)	15 sec max
RWCU/SDC bottom head suction line sample line outboard isolation valve (2 valves)	15 sec max
Chilled Water	
Chilled water supply line to DW cooler outboard isolation valve (2 valves)	30 sec max
Chilled water supply line to DW cooler inboard isolation valve (2 valves)	30 sec max
Chilled water return line from DW cooler inboard isolation valve (2 valves)	30 sec max
Chilled water return line from DW cooler outboard isolation valve (2 valves)	30 sec max
Makeup Water	
Demin water DW distribution system outboard containment isolation valve (1 valve)	N/A
Demin water DW distribution system inboard containment isolation valve (1 valve)	N/A
Service Air	
Service air system inboard containment isolation valve (1 valve)	N/A
Service air system outboard containment isolation valve (1 valve)	N/A

Table 2.15.1-1d

Containment System Penetration Isolation Valve Closure Times

Equipment Name	Closure Time (sec)[1]
High Pressure Nitrogen Gas Supply	
N2 supply line outboard isolation valve to ADS, SRV and ICIV accumulator (1 valve)	15 sec max
N2 supply line inboard isolation check valve to ADS, SRV and ICIV accumulator (1 valve)	N/A
N2 supply line outboard isolation valve to MSIV and other uses (1 valve)	15 sec max
N2 supply line inboard check valve to MSIV and other uses (1 valve)	N/A
Containment Inerting	
Air/N2 supply line to suppression pool outboard isolation valve (1 valve)	30 sec max
Air/N2 supply line to outboard isolation valve (1 valve)	30 sec max
Air/N2 supply line to upper DW outboard isolation valve (1 valve)	30 sec max
Lower DW exhaust line outboard isolation valve (1 valve)	30 sec max
Containment atmospheric exhaust line outboard isolation valve (1 valve)	30 sec max
Suppression pool exhaust line outboard isolation valve (1 valve)	30 sec max
Suppression pool exhaust line to Stack outboard isolation valve (1 valve)	N/A
Containment atmospheric bleed line outboard isolation valve (1 valve)	5 sec max
Containment atmospheric bleed line outboard isolation valve (1 valve)	5 sec max
Suppression pool exhaust line to Stack outboard isolation valve (1 valve)	N/A
N2 makeup line outboard isolation valve (1 valve)	5 sec max
N2 makeup line to suppression pool outboard isolation valve (1 valve)	5 sec max
N2 makeup line to upper DW outboard isolation valve (1 valve)	5 sec max
Containment Monitoring	
DW to Sample Rack (2 valves)	N/A
DW to Sample Rack (2 valves)	N/A

Table 2.15.1-1d

Containment System Penetration Isolation Valve Closure Times

Equipment Name	Closure Time (sec)[1]
Gas Sample Return to Containment (2 valves)	N/A
Gas Sample Return to WW (2 valves)	N/A
Gas Sample Return to DW (2 valves)	N/A
Gas Sample Return to WW (2 valves)	N/A
Gas Sample Return to DW (2 valves)	N/A
Gas Sample Return from Containment to Sample (2 valves)	N/A
Isolation to Skid for CAM Sample (2 valves)	N/A
Isolation for Gas Sample Return to Containment (1 valve)	N/A
Isolation for Gas Sample Return to Containment (1 valve)	N/A
RCCW Supply to CMS Skid (1 valve)	N/A
RCCW Supply to CMS Skid (1 valve)	N/A
RCCW Return from CMS Skid (1 valve)	N/A
RCCW Return from CMS Skid (1 valve)	N/A
Liquid Sample Return to Suppression Pool (1 valve)	N/A
Equipment and Floor Drain	
DW equipment drain (LCW) sump discharge line inboard isolation valve (1 valve)	N/A
DW equipment drain (LCW) sump discharge line outboard isolation valve (1 valve)	N/A
DW floor drain (HCW) sump discharge line inboard isolation valve (1 valve)	N/A
DW floor drain (HCW) sump discharge line outboard isolation valve (1 valve)	N/A

[1] This table is used for Acceptance Criteria only

Table 2.15.1-2

ITAAC For The Containment System

Design Commitment	Inspections, Tests, Analyses	Acceptance Criteria
1. The functional arrangement of the Containment System is as described in the Design Description of this Subsection 2.15.1 and as shown in Figure 2.15.1-1.	Inspections of the as-built system will be conducted.	Inspection report(s) document that the as-built Containment System conforms to the functional arrangement as described in Subsection 2.15.1 and Figure 2.15.1-1. For components and piping identified in Table 2.15.1-1a as ASME Code Section III, this report is an ASME Code report.
2.a.i. The components identified in Table 2.15.1-1 as ASME Code Section III are designed in accordance with ASME Code Section III requirements and seismic Category I requirements.	Inspection of ASME Code Design Reports (NCA 3550) and required documents will be conducted.	An ASME Code Design Data Report (certified, when required by ASME Code) exists for the components identified in Table 2.15.1-1 as ASME Code Section III and demonstrates compliance to NCA-3550, including for those stresses and loads related to fatigue (including environmental effects), thermal expansion, seismic, and combined.

Table 2.15.1-2

ITAAC For The Containment System

Design Commitment	Inspections, Tests, Analyses	Acceptance Criteria
2.a.ii. The RCCV and its liners are designed to meet the requirements in Article CC-3000 of ASME Code, Section III, Division 2, and seismic Category I requirements. The steel components of the RCCV are designed to meet the requirements in Article NE-3000 of ASME Code, Section III, Division 1, and seismic Category I requirements.	Inspection of ASME Code Design Data Report and certified documents for the RCCV and its liners, and for the steel components of the RCCV will be conducted.	An ASME Code Design Data Report (certified, when required by ASME Code) exists for the RCCV and its liners and steel components in accordance with ASME Code Section III, including for those stresses and loads related to fatigue (including environmental effects), thermal expansion, seismic, and combined.
2.a.iii. The piping identified in Table 2.15.1-1 as ASME Code Section III is designed in accordance with ASME Code Section III requirements and seismic Category I requirements.	Inspection of ASME Code Design Reports (NCA 3550) and required documents for the piping will be conducted. {{Design Acceptance Criteria}}	An ASME Code Design Data Report (certified, when required by ASME Code) exists for the piping identified in Table 2.15.1-1 as ASME Code Section III and demonstrates compliance to NCA-3550, including for those stresses and loads related to fatigue (including environmental effects), thermal expansion, seismic, and combined. {{Design Acceptance Criteria}}

Table 2.15.1-2

ITAAC For The Containment System

Design Commitment	Inspections, Tests, Analyses	Acceptance Criteria
2.b.i. The design of the components identified in Table 2.15.1-1 as ASME Code Section III will be reconciled with the design requirements.	A reconciliation analysis of the components using as-designed and as-built information and ASME Code Design Reports (NCA 3550) will be conducted.	A report concludes that the as-built components are reconciled with the design documents used for design analysis. For ASME Code Components, the reconciliation report includes comparison to the ASME Code Design Report (NCA-3550) (certified, when required by ASME Code) and documents the results of the reconciliation analysis.
2.b.ii. The RCCV and its liners are designed to meet the requirements in Article CC-3000 of ASME Code, Section III, Division 2, and seismic Category I requirements. The steel components of the RCCV are designed to meet the requirements in Article NE-3000 of ASME Code, Section III, Division 1, and seismic Category I requirements. The design of these components will be reconciled with the design requirements.	A reconciliation analysis of the RCCV and its liners and steel components using as-designed and as-built information and ASME Code Design Reports will be conducted.	A report concludes that the as-built components are reconciled with the design documents used for design analysis. For ASME Code Components, the reconciliation report includes comparison to the ASME Code Design Report (certified, when required by ASME Code) and documents the results of the reconciliation analysis.

Table 2.15.1-2

ITAAC For The Containment System

Design Commitment	Inspections, Tests, Analyses	Acceptance Criteria
2.b.iii. The as-built piping identified in Table 2.15.1-1 as ASME Code Section III shall be reconciled with the piping design requirements.	A reconciliation analysis of the piping using the as-designed and as-built information and ASME Code Design Reports (NCA 3550) will be conducted.	A report concludes that the as-built piping has been reconciled with the design documents used for design analysis. The reconciliation report includes comparison to the ASME Code Design Reports (NCA-3550) (certified, when required by ASME Code) and documents the results of the reconciliation analysis.
2.c.i. The components identified in Table 2.15.1-1 as ASME Code Section III are fabricated, installed, and inspected in accordance with ASME Code Section III requirements.	Inspections of ASME Code Reports and requirements documents will be conducted.	An ASME Code Report (certified, when required by ASME Code) exists and concludes that an ASME Code Section III stress report(s) exist for the as-built components identified in Table 2.15.1-1 as ASME Code Section III. An ASME Code Report exists and concludes that for ASME Section III, Division 2 construction, ASME Code Section III stress reports demonstrate compliance to NCA-3350 through NCA-3380, and NCA-3454. An ASME Code Report exists and concludes that for ASME Section III, Division 1 construction, ASME Code Section III stress reports demonstrate compliance to NCA-3350. ASME Code inspection reports document results of inspections.

Table 2.15.1-2

ITAAC For The Containment System

Design Commitment	Inspections, Tests, Analyses	Acceptance Criteria
2.c.ii. The RCCV and its liners are fabricated, installed, and inspected in accordance with the requirements in Article CC-3000 of ASME Code, Section III, Division 2. The steel components of the RCCV are designed to meet the requirements in Article NE-3000 of ASME Code, Section III, Division 1.	Inspection of certified documents for as-built components and piping, for the RCCV and its liners, and for the steel components of the RCCV will be conducted.	An ASME Code Report (certified, when required by ASME Code) exists and concludes that an ASME Code Section III stress report(s) exist for the as-built RCCV and its liners and steel components. An ASME Code Report exists and concludes that for ASME Section III, Division 2 construction, ASME Code Section III stress reports demonstrate compliance to NCA-3350 through NCA-3380, and NCA-3454. An ASME Code Report exists and concludes that for ASME Section III, Division 1 construction, ASME Code Section III stress reports demonstrate compliance to NCA-3350. ASME Code inspection reports document results of inspections.

Table 2.15.1-2

ITAAC For The Containment System

Design Commitment	Inspections, Tests, Analyses	Acceptance Criteria
2.c.iii. The piping identified in Table 2.15.1-1 as ASME Code Section III is, fabricated, installed, and inspected in accordance with ASME Code Section III requirements.	Inspection of certified documents for as-built will be conducted.	An ASME Code Report (certified, when required by ASME Code) exists and concludes that an ASME Code Section III stress report(s) exist for the as-built piping identified in Table 2.15.1-1 as ASME Code Section III. An ASME Code Report exists and concludes that for ASME Section III, Division 2 construction, ASME Code Section III stress reports demonstrate compliance to NCA-3350 through NCA-3380, and NCA-3454. An ASME Code Report exists and concludes that for ASME Section III, Division 1 construction, ASME Code Section III stress reports demonstrate compliance to NCA-3350. ASME Code inspection reports document results of inspections.
3. Pressure Boundary Welds a. Pressure boundary welds in components identified in Tables 2.15.1-1a and 2.15.1-1b as ASME Code Section III meet ASME Code Section III requirements.	Inspection of the as-built pressure boundary welds will be performed in accordance with ASME Code Section III.	An ASME Code Report exists and concludes that the ASME Code Section III requirements are met for non-destructive examination of pressure boundary welds in the CS.

Table 2.15.1-2

ITAAC For The Containment System

Design Commitment	Inspections, Tests, Analyses	Acceptance Criteria
b. Pressure boundary welds in piping identified in Tables 2.15.1-1a and 2.15.1-1b as ASME Code Section III meet ASME Code Section III requirements.	Inspection of the as-built pressure boundary welds will be performed in accordance with ASME Code Section III.	An ASME Code Report exists and concludes that the ASME Code Section III requirements are met for non-destructive examination of pressure boundary welds in the CS.
4. The components and piping identified in Tables 2.15.1-1a and 2.15.1-1b as ASME Code Section III retain their pressure boundary integrity at their design pressure.	i) A hydrostatic pressure test will be performed on the components and piping required by the ASME Code Section III to be tested.	i) An ASME Code report exists and concludes that the results of the hydrostratic pressure test of the components and piping identified in Tables 2.15.1-1a and 2.15.1-1b as ASME Code Section III comply with the requirements of the ASME Code Section III.
	ii) Impact testing will be performed on the containment and pressure-retaining materials in accordance with the ASME Code Section III to confirm the fracture toughness of the materials.	ii) An ASME Code report exists and concludes that the containment and pressure-retaining penetration materials comply with fracture toughness requirements of the ASME Code Section III.
5. The seismic Category I equipment identified in Tables 2.15.1-1a, 2.15.1-1b, and 2.15.1-1c can withstand design basis loads without loss of structural integrity and safety function.	i) Type tests and/or analyses of seismic Category I equipment will be performed.	i) A report exists and documents that the seismic Category I equipment can withstand design basis dynamic loads without loss of structural integrity and safety function.

Table 2.15.1-2

ITAAC For The Containment System

Design Commitment	Inspections, Tests, Analyses	Acceptance Criteria
	ii) Inspections will be performed for the existence of a report verifying that the as-installed equipment including anchorage is bounded by the tested or analyzed conditions.	ii) The as-built equipment including anchorage is bounded by the tested or analyzed conditions.
	iii) Inspections of the equipment identified in Tables 2.15.1-1a, 2.15.1-1b and 2.15.1-1c will be performed to verify that the equipment is housed in seismic Category I structures.	iii) The seismic category I equipment identified in Tables 2.15.1-1a, 2.15.1-1b, and 2.15.1-1c is housed in a seismic Category I structure.
6. The equipment qualification of Containment Systems components is addressed in DCD Tier 1 Section 3.8.	See Section 3.8.	See Section 3.8.
a. The electrical safety-related components associated with actuation and status monitoring of final control elements of the Containment System components listed in Tables 2.15.1-1a, 2.15.1-1b, and 2.15.1-1c are powered from their respective safety-related division.	Test(s) will be performed on the Containment System by providing a test signal in only one safety-related division at a time.	Test report(s) exist and document that the test signal exists only in the safety-related division (or at the equipment powered from the safety-related division) under test in the Containment System.
b. Separate electrical penetrations are provided for circuits of each safety-related division and for nonsafety-related circuits.	Inspection of the as-built electrical containment penetrations will be performed.	Inspection report(s) document that each as-built electrical penetration contains cables of only one division or contains nonsafety-related cables.

Table 2.15.1-2

ITAAC For The Containment System

Design Commitment	Inspections, Tests, Analyses	Acceptance Criteria
c. The circuits of each electrical penetration are of the same voltage class.	Inspections of the as-built containment electrical penetrations will be performed.	Inspection report(s) document that each as-built circuit of each electrical penetration is of the same voltage class.
7. The containment system provides a barrier against the release of fission products to the atmosphere.	Perform Type A, B and C leakrate tests in accordance with 10 CFR 50 Appendix J.	Test report(s) conclude that leak rates are less than the acceptance criterion established per 10CFR 50 Appendix J.
8. The containment system pressure boundary retains its structural integrity when subject to design pressure.	A Structural Integrity Test (SIT) of the containment structure is performed in accordance with Article CC-6000 of ASME Code Section III, Division 2 and Regulatory Guide 1.136, after completion of the containment construction. The first prototype containment structure will be instrumented to measure strains per ASME Code Section III, Division 2, CC-6370.	Test report documents that the containment system pressure boundary retains its structural integrity when tested and evaluated in accordance with ASME Code Section III, Division 2 at a test pressure of at least 115% of the design pressure of 310 KPa gauge (45 psig).
9. The containment system provides the safety-related function of containment isolation for containment boundary integrity.	i) Tests will be performed to demonstrate that containment isolation valves close within the required response times.	i) Report(s) document that the containment isolation valves close within the required response times identified in Table 2.15.1-1d.

Table 2.15.1-2

ITAAC For The Containment System

Design Commitment	Inspections, Tests, Analyses	Acceptance Criteria
	ii) Tests will be performed to demonstrate that remote manual operated containment isolation valves reposition to the required post-accident position using real or simulated containment isolation signals.	ii) Report(s) document that the remote manual operated valves identified in Table 2.15.1-1a as having a containment isolation signal reposition to the required post-accident state after receiving a containment isolation signal.
	iii) Exercise testing of the process actuated check valves identified in Table 2.15.1-1a will be performed under preoperational test pressure, temperature and fluid flow conditions.	iii) Test report(s) document that each as-built process actuated check valve changes position as indicated in Table 2.15.1-1a.
	iv) Deleted.	iv) Deleted.
	v) Deleted.	v) Deleted.

Table 2.15.1-2

ITAAC For The Containment System

Design Commitment	Inspections, Tests, Analyses	Acceptance Criteria
	vi) Deleted.	vi) Deleted.
	vii) Testing of the as-built valves will be performed under the conditions of loss of motive power.	vii) Test report(s) document that after a loss of motive power, each remote manual valve identified in Table 2.15.1-1a assumes the indicated loss of motive power position.
10. Containment electrical penetration assemblies, whose maximum available fault current (including failure of upstream devices) is greater than the continuous rating of the penetration, are protected against currents that are greater than the continuous ratings.	An analysis of the as-built containment electrical penetration assemblies will be performed to demonstrate either (1) the maximum overcurrent of the circuits does not exceed the continuous current rating of the penetration, or (2) circuits whose maximum available fault currents are greater than the continuous current rating of the penetration are provided with redundant overcurrent interrupting devices.	Report(s) document that analysis exists for the as-built containment electrical penetration assemblies and concludes that the penetrations, whose maximum available fault current (including failure of upstream devices) is greater than the continuous rating of the penetration, are protected against currents that are greater than their continuous ratings.

Table 2.15.1-2

ITAAC For The Containment System

Design Commitment	Inspections, Tests, Analyses	Acceptance Criteria
11. The minimum set of displays, alarms and controls, based on the emergency procedure guidelines and important operation actions, is available in the main control room.	Inspection of the as-built main control room will verify that the minimum set of displays, alarms and controls for the Containment System is available.	Inspection report(s) document that the minimum set of displays, alarms and controls for the Containment System, as defined by the emergency operating procedures and important operator actions exist in the as-built main control room.
12. The amount of chlorine bearing cable insulation exposed to the containment atmosphere is limited.	Analyses and inspection will be used to confirm the final exposed chlorine bearing cable insulation mass.	A report documents that the amount of chlorine bearing cable insulation exposed to the containment atmosphere (i.e. not within an enclosed cable tray, pipe, conduit, or metal cable jacketing) is ≤ 3400 kg.
13. The DW and WW volumes are adequately sized to accommodate the calculated maximum DW temperature and absolute pressure that are postulated to occur as a result of a design basis accident.	Using as-built dimensions, the DW and WW volumes will be calculated.	A report documents that the calculated as-built DW and WW volumes are greater than or equal to the design basis values.
14. The water volume of the WW is adequately sized to condense the steam that is forced into the WW from the DW due to a postulated design basis event.	Using as-built dimensions of the WW and a minimum measured suppression pool depth of 5.4 meters (213 inches), the volume of the suppression pool will be calculated.	A report demonstrates that the calculated suppression pool water volume is equal to or greater than the water volume assumed in the containment performance safety analysis.

Table 2.15.1-2

ITAAC For The Containment System

Design Commitment	Inspections, Tests, Analyses	Acceptance Criteria
15. Each vacuum breaker isolation valve automatically closes if the vacuum breaker does not fully close when required.	A test will be performed by providing a simulated or real not-fully closed vacuum breaker signal originating from the closed position proximity sensor and temperature sensors to close the associated vacuum breaker isolation valve.	A report demonstrates that each as-built vacuum breaker isolation valve automatically closes when a simulated or real not-fully closed signal is provided from the closed position proximity sensor of its associated vacuum breaker.
16a. Each vacuum breaker has proximity sensors to detect open/close position. This indication is available in the main control room.	Testing will be performed with each as-built vacuum breaker to demonstrate that the proximity sensors indicate open and closed position.	Test report(s) demonstrate that each as-built vacuum breaker proximity sensor indicates an open position with the vacuum breaker open and indicates a closed position when the vacuum breaker is in the fully closed position. The open and closed position indications of the as-built vacuum breakers are available in the main control room.
16b. Each vacuum breaker has temperature sensors to detect bypass leakage. This indication is available in the main control room.	A test will be performed on a vacuum breaker to detect bypass leakage.	Records of test conclude vacuum breaker temperature sensors detect bypass leakage.
17. The containment penetration isolation design for each fluid piping system requiring isolation meets the single-failure criterion to ensure completion of penetration isolation.	Single-failure analysis is performed on the isolation design of each penetration class or penetration, as applicable.	A study of all applicable primary containment fluid system penetrations demonstrates that, for each penetration or penetration class isolation design, the single-failure criterion is satisfied.

Table 2.15.1-2

ITAAC For The Containment System

Design Commitment	Inspections, Tests, Analyses	Acceptance Criteria
18. DW to WW bypass leakage is less than the assumed value used in the containment capability design basis containment response analysis.	A DW to WW bypass leakage test will be conducted.	Report(s) document that the results of the DW to WW bypass leakage is less than or equal to 50% of the assumed value in the containment capability design basis containment response analysis.
19. Total DW to WW vacuum breaker bypass pathway leakage is less than the assumed value used in the containment capability design basis containment response analysis.	A DW to WW bypass leakage test will be conducted for each vacuum breaker and associated vacuum breaker isolation valve.	Report(s) document that the results of the total DW to WW vacuum breaker bypass pathway leakage is less than or equal to 35% of the assumed value in the containment capability design basis containment response analysis.
20. Each vacuum breaker opening differential pressure is less than or equal to the required opening differential pressure.	An opening differential pressure test will be conducted for each vacuum breaker.	Report(s) document that the results of the opening differential pressure is less than or equal to 3.07 kPa (0.445 psi).
21. Each vacuum breaker closing differential pressure is less than or equal to the required closing differential pressure.	A closing differential pressure test will be conducted for each vacuum breaker.	Report(s) document that the results of the the closing differential pressure is greater than or equal to 2.21 kPa (0.320 psi).

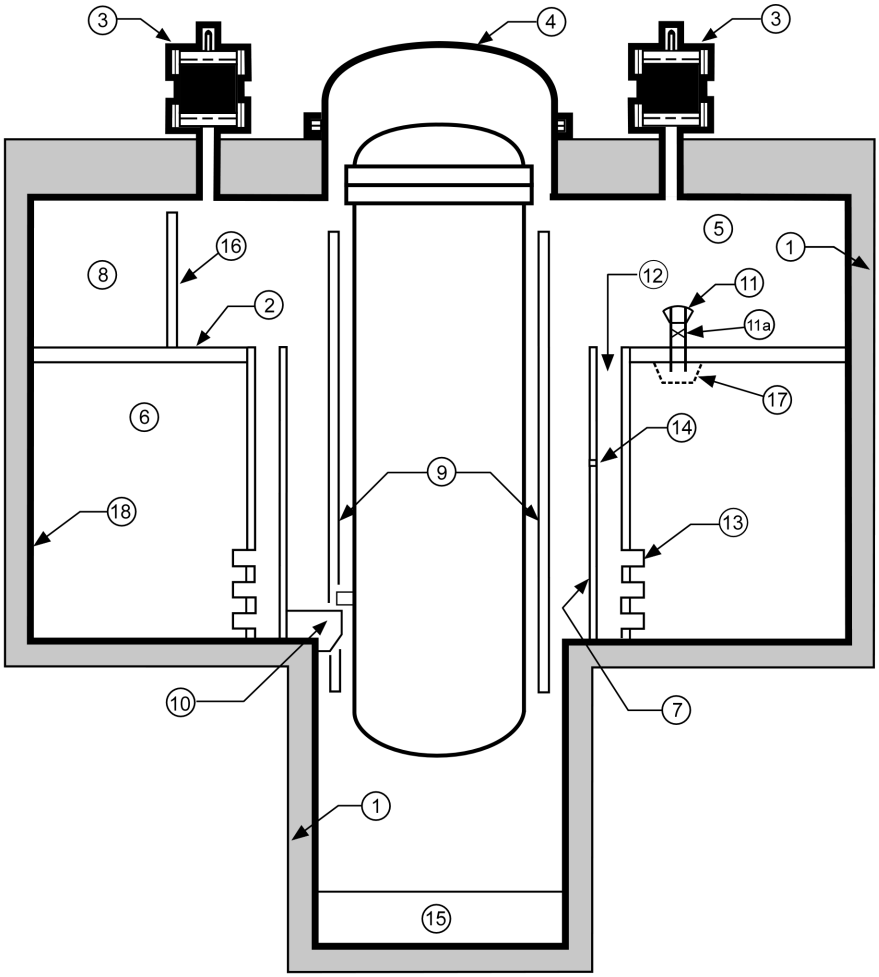

LEGEND

1. Reinforced Concrete Containment Vessel (RCCV)
2. Diaphram Floor Slab, Distance from bottom of slab to the Wetwell Floor > 9600 mm
3. (6) Passive Containment Cooling System (PCCS)
4. Drywell Head
5. Drywell
6. Wetwell
7. Vent Wall
8. (3) GDCS Pools
9. Reactor Shield Wall
10. (8) RPV Support Brackets
11. (3) Vacuum Breakers, ≥ 0.0967 m^2 (1.041 ft^2) Each

11a. (3) Vacuum Breaker Isolation Valves, ≥ 0.0967 m^2 (1.041 ft^2) Each

12. (12) Vertical Vents, ≥ 13.6 m^2 (146 ft^2) Total
13. (36) Horizontal Vents, ≥ 0.7 m (2.30 ft) I. D.
    - Top Row (centerline) 3.5 m (11.48 ft) above wetwell floor
    - Middle Row (centerline) 2.13 m (6.99 ft) above wetwell floor
    - Bottom Row (centerline) 4.69 m (2.49 ft) above wetwell floor
14. (12) Spillover Holes, 200 mm (8 inch) Nominal Diameter, Elevation 12370 mm
15. BiMAC
16. GDCS Pool Wall (Typical)
17. Protective Shield/Debris Screen
18. Suppression Pool Stainless Steel Liner

Figure 2.15.1-1. Containment System

2.15.2 Containment Vessel

Design Description and ITAAC are addressed in Subsection 2.15.1.

2.15.3 Containment Internal Structures

Design Description

The functions of the containment internal structures include (1) support of the reactor vessel radiation shielding, (2) support of piping and equipment, and (3) formation of the pressure suppression boundary. The containment internal structures consist of the diaphragm floor slab that separates the DW and the WW, vent wall, Gravity-Driven Cooling System (GDCS) pool walls, reactor shield wall, and the Reactor Pressure Vessel (RPV) support bracket.

The Containment Internal Structures are as shown in Figure 2.15.3-1 and the component locations of the Containment System are as shown in Table 2.15.3-1.

(1) The functional arrangement of the Containment Internal Structures is described in the Design Description of subsection 2.15.3.

(2) Containment Internal Structures identified in Table 2.15.3-1 are designed and constructed in accordance with ANSI/AISC N690 requirements.

(3) The Containment Internal Structures identified in Table 2.15.3-1 conform to Seismic Category I requirements and can withstand seismic design basis loads, suppression pool hydrodynamic loads, design basis loss of coolant accident generated loads and annulus pressurization loads without loss of structural integrity and safety function.

(4) (Deleted)

(5) The diaphragm floor and vent wall structures that separate the DW and WW retain their integrity when subjected to the maximum design differential pressure.

(6) (Deleted)

(7) (Deleted)

(8) (Deleted)

Inspections, Tests, Analyses and Acceptance Criteria

Table 2.15.3-2 provides a definition of the inspections, tests, and/or analyses, together with associated acceptance criteria for the Containment Internal Structures.

Table 2.15.3-1

Containment Internal Structures Locations

Component	Component Location
Diaphragm Floor Slab	Inside of Containment Boundary
Vent Wall	Inside of Containment Boundary
Gravity-Driven Cooling System (GDCS) Pool Walls	Inside of Containment Boundary
Reactor Shield Wall	Inside of Containment Boundary
RPV Support Bracket	Inside of Containment Boundary

Table 2.15.3-2

ITAAC For The Containment Internal Structure

Design Commitment	Inspections, Tests, Analyses	Acceptance Criteria
1. The functional arrangement of the Containment Internal Structures is as described in the Design Description Subsection 2.15.3.	Inspections of the as-built system will be conducted.	Inspection reports document that the as-built Containment Internal Structures conforms with the design description in Subsection 2.15.3.
2. The Containment Internal Structures identified in Table 2.15.3-1 are designed and constructed in accordance with ANSI/AISC N690 requirements.	Inspection and analyses will be performed for the as-built components of the Containment Internal Structures identified in Table 2.15.3-1.	Inspection reports and analyses document that the as-built components of the Containment Internal Structures identified in Table 2.15.3-1 comply with ANSI/AISC N690 requirements.
3. The Containment Internal Structures identified in Table 2.15.3-1 conform to Seismic Category I requirements and can withstand seismic design basis loads, suppression pool hydrodynamic loads, design basis loss of coolant accident generated loads and annulus pressurization loads without loss of structural integrity and safety function.	i) Analyses will be performed on the Containment Internal Structures identified in Table 2.15.3-1 to ensure they meet Seismic Category I requirements and can withstand seismic design basis loads, suppression pool hydrodynamic loads, design basis loss of coolant accident generated loads and annulus pressurization loads without loss of structural integrity and safety function.	i) Analysis report(s) documents and inspections demonstrate that the as-built Containment Internal Structures identified in Table 2.15.3-1 can withstand seismic design basis dynamic loads, suppression pool hydrodynamic loads, design basis loss of coolant accident generated loads and annulus pressurization loads without loss of structural integrity and safety function.

Table 2.15.3-2

ITAAC For The Containment Internal Structure

Design Commitment	Inspections, Tests, Analyses	Acceptance Criteria
	ii) Inspections of the as-built Containment Internal Structures identified in Table 2.15.3-1 will be performed to verify that they are housed in a seismic Category I structure.	ii) A report documents that the as-built Containment Internal Structures identified in Table 2.15.3-1 are housed in a seismic Category I structure..
4. Deleted		
5. The diaphragm floor and vent wall structures that separate the DW and WW retain their integrity when subjected to the maximum design differential pressure.	Part of the containment Structural Integrity Test specified in Tier 1 Table 2.15.1-2 ITAAC # 8 will test the diaphragm floor and vent wall structure with a test pressure equal to 1.0 times the maximum design differential pressure conducted with the DW pressure greater than WW pressure.	A report of the SIT results demonstrates compliance with ASME Code requirements for the applied test pressure for the containment structures.
6. Deleted		
7. Deleted		
8. Deleted		

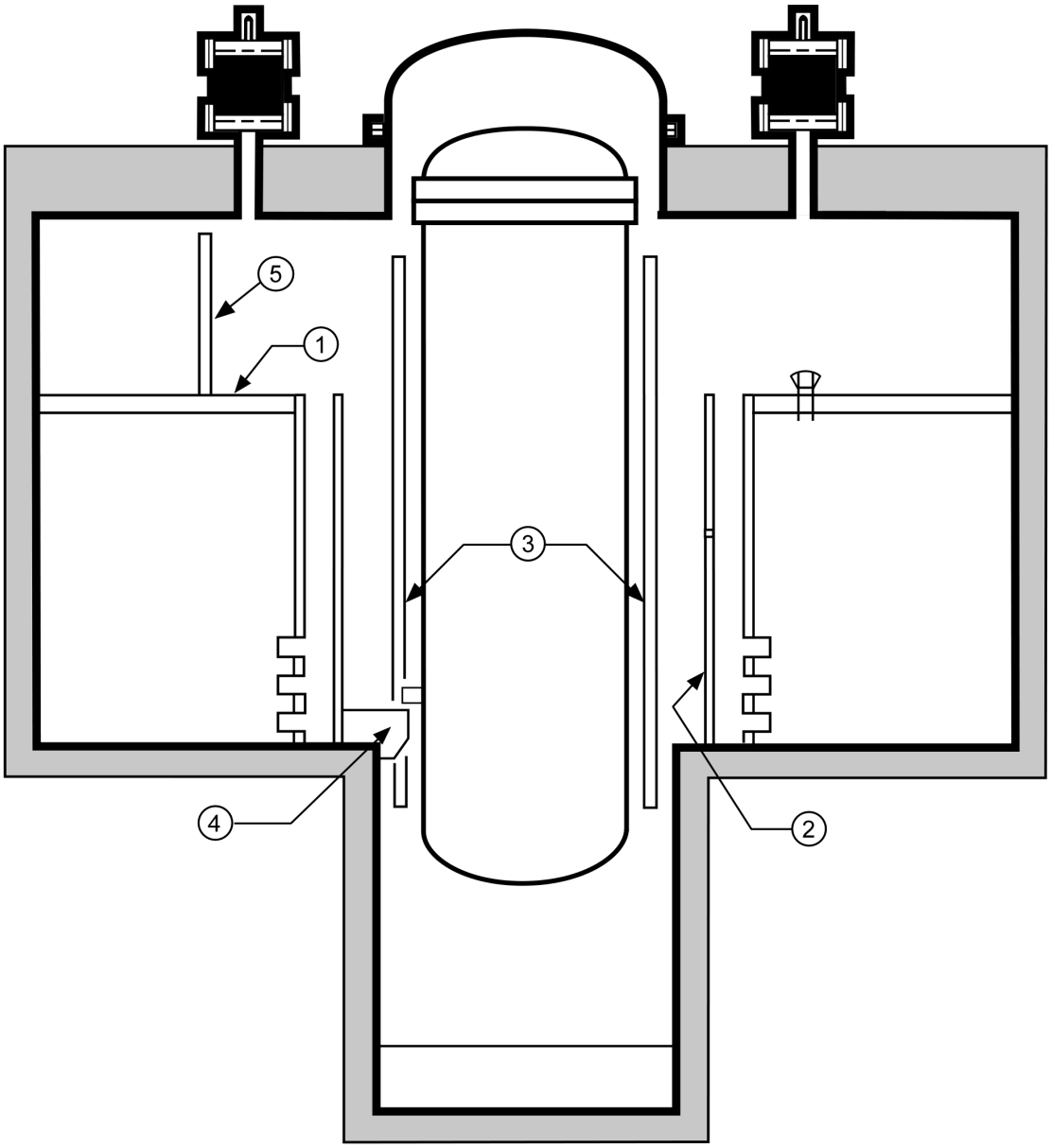

LEGEND

1. Diaphram Floor Slab
2. Vent Wall
3. Reactor Shield Wall
4. RPV Support Bracket (Typical 8)
5. GDCS Pool Wall (Typical)

Figure 2.15.3-1. Containment Internal Structures

2.15.4 Passive Containment Cooling System

Design Description

The Passive Containment Cooling System (PCCS), in conjunction with the suppression pool, maintains the containment within its pressure limits for DBAs such as a LOCA, by condensing steam from the DW atmosphere and returning the condensed liquid to the Gravity Driven Cooling System (GDCS) pools. The system is passive, with no components that must actively function in the first 72-hours after a DBA.

(1) The functional arrangement for the PCCS is as described in the Design Description in this subsection 2.15.4, Table 2.15.4-1 and Figure 2.15.4-1.

(2) ASME Code Section III

a1. The components identified in Table 2.15.4-1 as ASME Code Section III are designed in accordance with ASME Code Section III requirements and seismic Category I requirements.

a2. The components identified in Table 2.15.4-1 as ASME Code Section III shall be reconciled with the design requirements.

a3. The components identified in Table 2.15.4-1 as ASME Code Section III are fabricated, installed, and inspected in accordance with ASME Code Section III requirements.

b1. The piping identified in Table 2.15.4-1 as ASME Code Section III is designed in accordance with ASME Code Section III requirements and seismic Category I requirements.

b2. The as-built piping identified in Table 2.15.4-1 as ASME Code Section III shall be reconciled with the with the piping design requirements.

b3. The piping identified in Table 2.15.4-1 as ASME Code Section III is fabricated, installed, and inspected in accordance with ASME Code Section III requirements.

(3) Pressure Boundary Welds

a. Pressure boundary welds in components identified in Table 2.15.4-1 as ASME Code Section III meet ASME Code Section III requirements.

b. Pressure boundary welds in piping identified in Table 2.15.4-1 as ASME Code Section III meet ASME Code Section III requirements.

(4) The pressure boundary of the PCCS retains its integrity under the design pressure of 310 kPa gauge (45 psig).

(5) The seismic Category I components identified in Table 2.15.4-1 can withstand seismic design basis loads without loss of safety function.

(6) Deleted

(7) The PCCS together with the pressure suppression containment system will limit containment pressure to less than its design pressure for 72 hours after a LOCA.

(8) The equipment qualification of PCCS components is addressed in Tier 1 Section 3.8.

(9) The elevation of the PCCS vent line discharge point is submerged in the Suppression Pool at an elevation below low water level and above the uppermost horizontal vent.

(10) The PCCS will be designed to limit the fraction of containment leakage through the condensers to an acceptable value.

(11) The PCCS vent fans flow rate is sufficient to the meet beyond 72 hours containment cooling requirements.

(12) The PCCS vent fans can be remotely operated from the MCR.

Inspections, Tests, Analyses and Acceptance Criteria

Table 2.15.4-2 provides a definition of the inspections, tests and/or analyses, together with associated acceptance criteria for the Passive Containment Cooling System.

Table 2.15.4-1

Passive Containment Cooling System Mechanical Equipment

Equipment Name (Description)	Equipment Identifier see Figure 2.15.4-1	ASME Code Section III	Seismic Cat. I	RCPB Component	Containment Isolation Valve	Remotely Operated Valve	Loss of Motive Power Position	Deleted
PCC Heat Condenser	PCC Condenser	Yes	Yes	No	-	-	-	
PCC Inlet Line	P-1(A[1])	Yes	Yes	No	-	-	-	
Condensate Drain Line	P-2(A[1])	Yes	Yes	No	-	-	-	
Vent Fan Check Valve	Check Valve	Yes	Yes	No	-	-	-	
Non-Condensables Vent Line	P-3(A[1])	Yes	Yes	No	-	-	-	
Vent Fan	Vent Fan	Yes	No	No	-	-	-	
Non-Condensables Vent Line Sparger	Sparger	Yes	Yes	No	-	-	-	
PCCS Inlet Pipe Debris Filter	N/A	Yes	Yes	No	-	-	-	
PCCS Vent Fan Line	P-4 (A[1])	Yes	No	No	-	-	-	

Note: A dash means not applicable.

[1] Train A; Typical for Trains B, C, D, E & F.

Table 2.15.4-2

ITAAC For The Passive Containment Cooling System

Design Commitment	Inspections, Tests, Analyses	Acceptance Criteria
1. The functional arrangement for the PCCS is as described in the Design Description in this Section 2.15.4, Table 2.15.4-1 and Figure 2.15.4-1.	Inspections of the as-built system will be conducted.	Report(s) document that the as-built PCCS conforms to the functional arrangement for the PCCS as described in the Design Description in this subsection 2.15.4, Table 2.15.4-1 and Figure 2.15.4 1. For components and piping identified in Table 2.15.4-1 as ASME Code Section III, this report is an ASME Code report.
2. ASME Code Section III a1. The components identified in Table 2.15.4-1 as ASME Code Section III are designed in accordance with ASME Code Section III requirements and seismic Category I requirements.	Inspection of ASME Code Design Reports (NCA-3550) and required documents will be conducted.	ASME Code Design Reports (NCA-3550) (certified, when required by ASME Code) conclude that the design of the PCCS components identified in Table 2.15.4-1 as ASME Code Section III complies with the requirements of the ASME Code, Section III, including for those stresses and loads related to fatigue (including environmental effects), thermal expansion, seismic, and combined.

Table 2.15.4-2

ITAAC For The Passive Containment Cooling System

Design Commitment	Inspections, Tests, Analyses	Acceptance Criteria
a2. The components identified in Table 2.15.4-1 as ASME Code Section III shall be reconciled with the design requirements.	A reconciliation analysis of the components using as-design and as-built information and ASME Code certified Design Reports (NCA-3550) will be performed.	An ASME Code Design Report (certified, when required by ASME Code) exists and concludes that design reconciliation has been completed in accordance with the ASME Code for as-built reconciliation of the PCCS components identified in Table 2.15.4-1 as ASME Code Section III. The report documents the results of the reconciliation analysis.
a3. The components identified in Table 2.15.4-1 as ASME Code Section III are fabricated, installed, and inspected in accordance with ASME Code Section III requirements.	Inspection of the components will be conducted.	ASME Code Data Reports (including N-5 Data reports, where applicable) (certified, when required by ASME Code) and inspection reports document that the components identified in Table 2.15.4-1 as ASME Code Section III are fabricated, installed, and inspected in accordance with ASME Code Section III requirements.

Table 2.15.4-2

ITAAC For The Passive Containment Cooling System

Design Commitment	Inspections, Tests, Analyses	Acceptance Criteria
b1. The piping identified in Table 2.15.4-1 as ASME Code Section III is designed in accordance with ASME Code Section III requirements and seismic Category I requirements.	Inspection of ASME Code certified Design Reports (NCA-3550) and required documents will be conducted. {{Design Acceptance Criteria}}	ASME Code certified Design Reports (NCA-3550) (certified, when required by ASME Code) conclude that the design of the PCCS piping identified in Table 2.15.4-1 as ASME Code Section III complies with the requirements of the ASME Code, Section III, including for those stresses and loads related to fatigue (including environmental effects), thermal expansion, seismic, and combined.
b2. The as-built piping identified in Table 2.15.4-1 as ASME Code Section III shall be reconciled with the with the piping design requirements.	A reconciliation analysis of the piping using the as-designed and as-built information and ASME Code certified Design Reports (NCA-3550) will be performed.	An ASME Code Design Report (certified, when required by ASME Code) exists and concludes that design reconciliation has been completed in accordance with the ASME Code for as-built reconciliation of the PCCS piping identified in Table 2.15.4-1 as ASME Code Section III. The report documents the results of the reconciliation analysis.

Table 2.15.4-2

ITAAC For The Passive Containment Cooling System

Design Commitment	Inspections, Tests, Analyses	Acceptance Criteria
b3. The piping identified in Table 2.15.4-1 as ASME Code Section III is fabricated, installed, and inspected in accordance with ASME Code Section III requirements.	Inspections of the piping will be conducted.	ASME Code Data Reports (certified, when required by ASME Code) and inspection reports (including N-5 Data Reports where applicable) document that the piping identified in Table 2.15.4-1 as ASME Code Section III is fabricated, installed, and inspected in accordance with ASME Code Section III requirements.
3. Pressure Boundary Welds a. Pressure boundary welds in components identified in Table 2.15.4-1 as ASME Code Section III meet ASME Code Section III requirements.	Inspection of the as-built pressure boundary welds will be performed in accordance with the ASME Code Section III.	An ASME Code Report exists and concludes that the ASME Code Section III requirements are met for non-destructive examination of pressure boundary welds in the PCCS.
b. Pressure boundary welds in piping identified in Table 2.15.4-1 as ASME Code Section III meet ASME Code Section III requirements.	Inspection of the as-built pressure boundary welds will be performed in accordance with the ASME Code Section III.	An ASME Code Report exists and concludes that the ASME Code Section III requirements are met for non-destructive examination of pressure boundary welds in the PCCS.

Table 2.15.4-2

ITAAC For The Passive Containment Cooling System

Design Commitment	Inspections, Tests, Analyses	Acceptance Criteria
4. The pressure boundary of the PCCS retains its integrity under the containment design pressure of 310 kPa gauge (45 psig)	A containment Structural Integrity Test (SIT) will be conducted per ASME requirement at a test pressure of 1.15 times the design pressure. The first prototype containment structure will be instrumented to measure strains per ASME Code Section III, Div 1, NE-6320.	Test results demonstrate compliance to ASME Code Section III, Div 1, NE-3226.
5. The seismic Category I components identified in Table 2.15.4-1 can withstand seismic design basis loads without loss of safety function.	i) Inspection will be performed to verify that the seismic Category I equipment identified in Table 2.15.4-1 are located in a seismic Category I structure. ii) Type tests, analyses, or a combination of type tests and analyses of seismic Category I equipment will be performed. iii) Inspection will be performed for the existence of a report verifying that the as-installed equipment including anchorage is seismically bounded by the tested or analyzed conditions.	Report(s) document that: i) The seismic Category I equipment identified in Table 2.15.4-1 is located in a seismic Category I structure. ii) A report exists and concludes that the seismic Category I equipment can withstand seismic design basis loads without loss of safety function. iii) A report exists and concludes that the as-installed equipment including anchorage is seismically bounded by the tested or analyzed conditions.

Table 2.15.4-2

ITAAC For The Passive Containment Cooling System

Design Commitment	Inspections, Tests, Analyses	Acceptance Criteria
b. Deleted		
6. Deleted		
7. The PCCS together with the pressure suppression containment system will limit containment pressure to less than its design pressure for 72 hours after a LOCA.	Using prototype test data and as-built PCC unit information, an analysis will be performed to establish the heat removal capability of the PCC unit.	Test(s) and analysis(es) reports exist and conclude that analyzed containment pressure for 72 hours after a LOCA is less than containment design pressure, and that the PCC unit heat removal capacity is no less than 11 MWt given the following conditions: • Pure saturated steam in the tubes at 308 kPa (44.7 psia) absolute and 134˚C (273˚F) • IC/PCC pool water temperature is at atmospheric pressure and 102˚C (216˚F)
8. The equipment qualification of PCCS components is addressed in Tier 1 Section 3.8.	See Tier 1 Section 3.8.	See Tier 1 Section 3.8.
9. The elevation of the PCCS vent discharge point is submerged in the suppression pool at an elevation below low water level and above the uppermost horizontal vent.	A visual inspection will be performed of the PCCS vent discharge point relative to the horizontal vents.	The elevation of the discharge on the PCCS vent line is > 0.85 m (33.5 in) and < 0.90 m (35.4 in) above the top of the uppermost horizontal vent.

Table 2.15.4-2

ITAAC For The Passive Containment Cooling System

Design Commitment	Inspections, Tests, Analyses	Acceptance Criteria
10. The PCCS will be designed to limit the fraction of containment leakage through the condensers to an acceptable value.	A pneumatic leakage test of the PCCS will be conducted.	Test report(s) and analysis document that the combined leakage from each of the PCCS heat exchangers is $\leq 0.025L_a$
11. The PCCS vent fans flow rate is sufficient to meet the beyond 72 hours containment cooling requirements.	Flow rate will be measured. A type test of the vent fan to be installed.	Test and Analyses show that the PCC vent fans can provide a flow rate of 0.271 m^3/s (575 CFM) under the following conditions: • Pressusre 299 KPa (43.4 psi) • Density 2.29 Kg/m^3 (0.143 Lbs/ft^3) • Head across fan 5.50 KPa (0.80 psi)
12. The PCCS vent fans can be remotely operated from the MCR.	PCCS vent fans will be started using manually initiated signals from the MCR.	Report(s) exist and conclude that the PCCS vent fans start when manually initated signals are sent from the MCR.

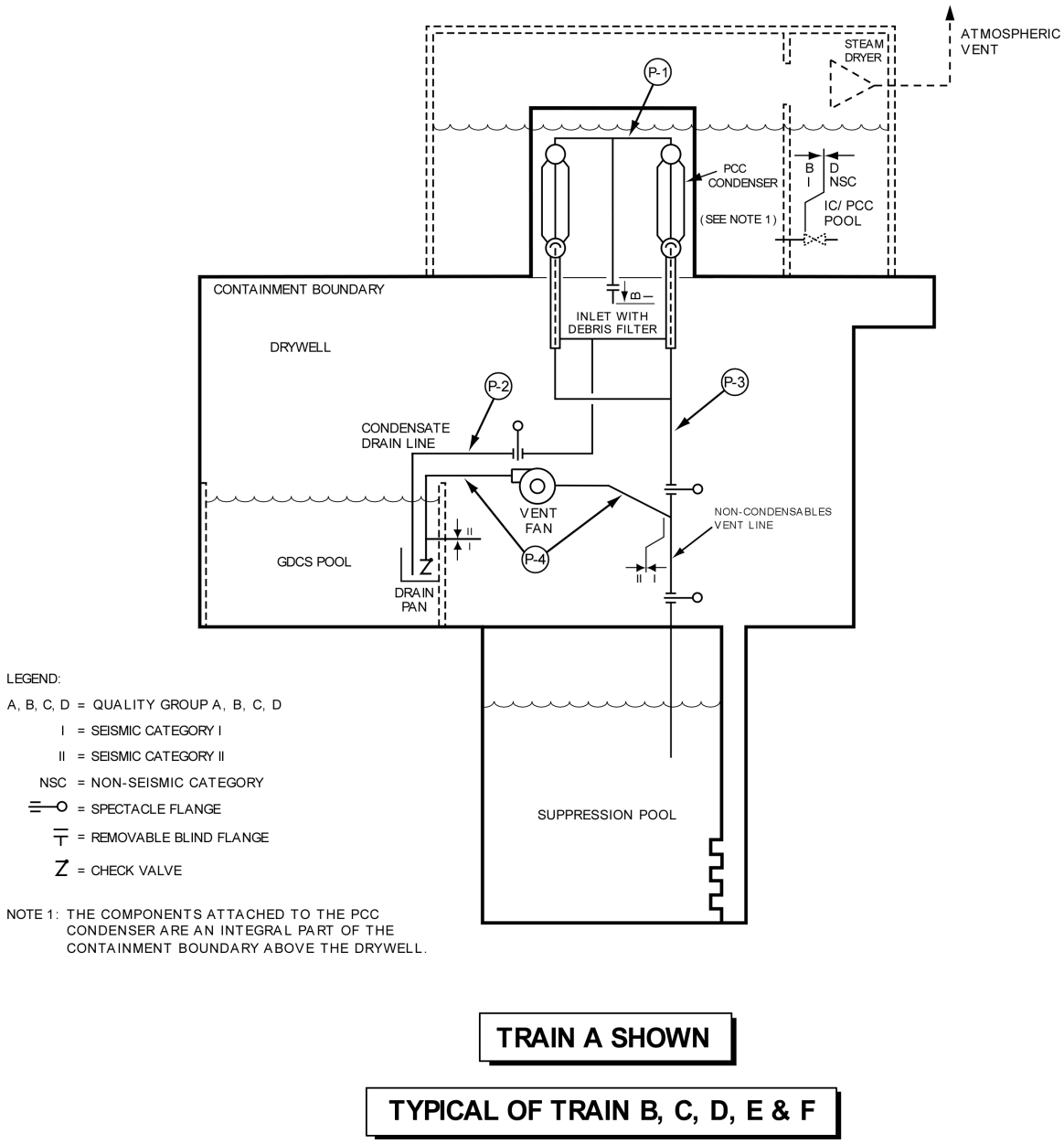

Figure 2.15.4-1. Passive Containment Cooling System Schematic

2.15.5 Containment Inerting System

Design Description

The Containment Inerting System (CIS) establishes and maintains an inert atmosphere within the containment during all plant operating modes, except during plant shutdown for refueling or equipment maintenance and during limited periods of time to permit access for inspection at low reactor power. The objective of the system is to reduce oxygen concentration to levels that do not support post-accident hydrogen combustion. The CIS also provides instruments and logic for MCR monitoring and alarming of DW temperature described in Table 2.15.5-1 associated with ITAAC (3) below.

The CIS does not perform any safety-related function except for its containment isolation function. Containment Isolation Valves and Penetrations are addressed in Tier 1 Subsection 2.15.1 for the Containment System.

(1) The containment can be inerted to less than or equal to 4% oxygen by volume.

(2) The containment isolation portions of the CIS are addressed in Tier 1, Subsection 2.15.1.

(3) The DW temperature indications are retrievable in the main control room (see Table 2.15.5-1).

Inspections, Tests, Analyses and Acceptance Criteria

Table 2.15.5-2 provides a definition of the inspections, test and/or analyses, together with associated acceptance criteria for the Containment Inerting System.

Table 2.15.5-1

Containment Inerting System Electrical Equipment

Equipment Name	Equipment ID	Control Q-DCIS/ DPS	Safety-Related Electrical Equipment	Safety-Related Display	Active Function	Loss of Motive Power Position	Remotely Operated Valve	Containment Isolation Valve
DW Temperature Transmitters(s)	-	No	No	No	No	-	-	-

Note: A dash means “not applicable”.

Table 2.15.5-2

ITAAC For The Containment Inerting System

Design Commitment	Inspections, Tests, Analyses	Acceptance Criteria
1. The containment can be inerted to less than or equal to 4% oxygen by volume.	Test of the containment in an inerted state will be conducted to determine oxygen concentration by volume.	Test report concludes that the containment can be inerted to less than or equal to 4% oxygen by volume.
2. The containment isolation portions of the CIS are addressed in Tier 1, Subsection 2.15.1.	See Tier 1 Subsection 2.15.1.	See Tier 1 Subsection 2.15.1.
3. The DW temperature indications are retrievable in the main control room.	Inspections of main control room indications will be conducted and verified for retrievability of DW temperature indications.	Inspection report documents that DW temperature indications are provided in the MCR.

2.15.6 Drywell Cooling System

Design Description

The Drywell Cooling System (DCS) does not perform or ensure any safety-related function, is not required to achieve or maintain safe shutdown, and is not subject to high regulatory oversight. Therefore the system is nonsafety-related and has no safety design basis.

Inspections, Tests, Analyses and Acceptance Criteria

No ITAAC are required for this system.

Table 2.15.6-1

Deleted

Table 2.15.6-2

Deleted

2.15.7 Containment Monitoring System

Design Description

The Containment Monitoring System (CMS) provides instrumentation listed in Table 2.15.7-1 to monitor the following parameters:

- DW and WW Hydrogen and Oxygen concentrations
- DW and WW Gross Gamma Radiation levels
- DW and WW Pressures
- DW/WW Differential Pressure
- Upper DW Level
- Lower DW Level
- Suppression Pool Water Level
- Suppression Pool Temperature

(1) The functional arrangement for the CMS is as described in the Design Description in this subsection 2.15.7, Table 2.15.7-1 and Figure 2.15.7-1.

(2) Each of the safety-related components identified in Table 2.15.7-1 is powered from its respective safety-related division.

(3) Each CMS measured parameter in Table 2.15.7-1 will indicate the measured parameter and initiate separate alarms in the control room when levels exceed applicable setpoints.

(4) The Hydrogen/Oxygen (H_2/O_2) monitoring subsystem of CMS is active during normal operation and additional sampling capacity is automatically initiated by a LOCA signal for post-accident monitoring of oxygen and hydrogen content in the containment.

(5) In each CMS Suppression Pool Temperature Monitoring (SPTM) division, signals from the CMS SPTM temperature and the CMS suppression pool water narrow range transmitters are provided for the divisional Reactor Protection System (RPS) logic processors to calculate the suppression pool average temperature.

(6) The seismic Category I equipment identified in Table 2.15.7-1 can withstand seismic design basis loads without loss of safety function.

(7) The equipment qualification of CMS components is addressed in Tier 1 Section 3.8.

(8) The containment isolation portions of the CMS system are addressed in Tier 1, Subsection 2.15.1.

(9) CMS software is developed in accordance with the software development program described in Section 3.2.

Refer to Subsection 2.2.15 for “Instrumentation & Controls Compliance With IEEE Std. 603.”

Inspections, Tests, Analyses and Acceptance Criteria

Table 2.15.7-2 provides the definitions of the inspections, tests, and/or analyses, together with associated acceptance criteria, which will be undertaken for the Containment Atmospheric Monitoring System and the suppression pool monitoring portions of CMS.

Table 2.15.7-1

Containment Monitoring System Electrical Equipment

Equipment Name	Equipment Identifier See Figure 2.15.7-1	Control Q-DCIS/ DPS[1]	Seismic Category I	Safety-Related	Safety-Related Display	Active Function	Remotely Operated	Containment Isolation Valve Actuator
DW Hydrogen Sampling Transmitter (2 divisional channels)	(H_2 Skid)	Yes	Yes	Yes	Yes	No	-	-
Drywell Oxygen Sampling Transmitter (2 divisional channels)	(O_2 Skid)	Yes	Yes	Yes	Yes	No	-	-
WW Hydrogen Sampling Transmitter (2 divisional channels)	(H_2 Skid)	Yes	Yes	Yes	Yes	No	-	-
WW Oxygen Sampling Transmitter (2 divisional channels)	(O_2 Skid)	Yes	Yes	Yes	Yes	No	-	-
Upper DW Gamma Radiation Transmitter (2 divisional channels)	RDT[2] (Upper DW)	No	No	No	No	No	-	-
Lower DW Gamma Radiation Transmitter (2 divisional channels)	RDT[2] (Lower DW)	No	No	No	No	No	-	-
WW Gamma Radiation Transmitter (2 divisional channels)	RDT[2] (WW)	No	No	No	No	No	-	-
DW Pressure Transmitter (Safety-related) (4 divisional channels)	PT[2] (DW)	Yes	Yes	Yes	Yes	No	-	-

Table 2.15.7-1

Containment Monitoring System Electrical Equipment

Equipment Name	Equipment Identifier See Figure 2.15.7-1	Control Q-DCIS/ DPS[1]	Seismic Category I	Safety-Related	Safety-Related Display	Active Function	Remotely Operated	Containment Isolation Valve Actuator
WW Pressure Transmitter (Safety-related) (4 divisional channels)	PT[2] (WW)	Yes	Yes	Yes	Yes	No	-	-
DW Pressure Wide Range Transmitter (Safety-related) (2 divisional channels)	PT[2] (DW)	Yes	Yes	Yes	Yes	No	-	-
WW Wide Range Pressure Transmitter (Safety-related)) (2 divisional channels)	PT[2] (WW)	Yes	Yes	Yes	Yes	No	-	-
DW Pressure Transmitter (Nonsafety-related) (4)	PT[2] (DW)	Yes	No	No	No	No	-	-
WW Pressure Transmitter (Nonsafety-related)	PT[2] (WW)	No	No	No	No	No	-	-
DW/WW Differential Pressure Transmitter (2 divisional channels)	PDT[2]	Yes	Yes	Yes	Yes	No	-	-
Upper DW Level Transmitter	LT[2] (Upper DW)	No	No	No	No	No	-	-
Lower DW Level Transmitter (4 divisional channels)	LT[2] (Lower DW)	Yes	Yes	Yes	Yes	No	-	-

Table 2.15.7-1

Containment Monitoring System Electrical Equipment

Equipment Name	Equipment Identifier See Figure 2.15.7-1	Control Q-DCIS/ DPS[1]	Seismic Category I	Safety-Related	Safety-Related Display	Active Function	Remotely Operated	Containment Isolation Valve Actuator
Lower DW Level Transmitter (2 divisional channels)	LT[2] (Lower DW)	Yes	Yes	Yes	Yes	No	-	-
Suppression Pool Water Level Narrow Range Transmitter) (4 divisional channels)	LT[2] (Suppression Pool)	Yes	Yes	Yes	Yes	No	-	-
Suppression Pool Water Level Wide Range Transmitter (4 channels)	LT[2] (Suppression Pool)	No	No	No	No	No	-	-
Suppression Pool Temperature Transmitter (4 divisional channels; multiple sensors)	TE[2] (Suppression Pool)	Yes	Yes	Yes	Yes	No	-	-

Note: A dash means not applicable.

[1] DPS input; See Section 2.2.14.

[2] Shown as representative in Figure 2.15.7-1.

Table 2.15.7-2

ITAAC For The Containment Monitoring System

Design Commitment	Inspections, Tests, Analyses	Acceptance Criteria
1. The functional arrangement for the CMS is as described in the Design Description in this subsection 2.15.7, Table 2.15.7-1 and Figure 2.15.7-1.	Inspections of the as-built system will be performed.	Report(s) document that the as-built CMS conforms with the functional arrangement described in the Design Description of this subsection 2.15.7, Table 2.15.7-1 and Figure 2.15.7-1.
2. Each of the safety-related components identified in Table 2.15.7-1 is powered from its respective safety-related division.	Testing will be performed on the CMS by providing a test signal in only one safety-related division at a time.	Report(s) document that a test signal exists in the safety-related division (or at the equipment identified in Table 2.15.7-1 powered from the safety-related division) under test in the CMS.
3. Each CMS measured parameter in Table 2.15.7-1 will indicate the measured parameter and initiate separate alarms in the control room when levels exceed applicable setpoints.	Using simulated signal inputs, CMS testing will be performed.	Report(s) document that each simulated signal representing a measured parameter in Table 2.15.7-1 indicates the measured parameter and initiates separate alarms in the control room when levels exceed applicable setpoints.
4. The Hydrogen/Oxygen (H2/O2) monitoring subsystem of CMS is active during normal operation and additional sampling capacity is automatically initiated by a LOCA signal for post-accident monitoring of oxygen and hydrogen content in the containment.	Using simulated electrical signals, CMS testing will be performed.	Report(s) document that H2/O2 monitor to be in operation within [90] minutes, including warm-up time, after occurrence of a LOCA initiation signal, which requires the monitor to be functional.
5. In each CMS Suppression Pool	Tests will be conducted in each division	Report(s) document that for each SPTM

Table 2.15.7-2

ITAAC For The Containment Monitoring System

Design Commitment	Inspections, Tests, Analyses	Acceptance Criteria
Temperature Monitoring (SPTM) division, signals from the CMS SPTM temperature and the CMS suppression pool water narrow range transmitters are provided for the divisional RPS logic processors to calculate the suppression pool average temperature.	of the SPTM using simulated temperature sensor signals.	division, output signals from the CMS SPTM temperature and the CMS suppression pool water narrow range transmitters are received to generate a suppression pool average temperature by the RPS logic processors.
6. The seismic Category I equipment identified in Table 2.15.7-1 can withstand seismic design basis loads without loss of safety function.	i) Inspection will be performed to verify that the seismic Category I equipment and valves identified in Table 2.15.7-1 are located in a seismic Category I structure. ii) Type tests, analyses, or a combination of type tests and analyses of seismic Category I equipment will be performed.	Report(s) document that: i) The seismic Category I equipment identified in Table 2.15.7-1 is located in a seismic Category I structure. ii) A report exists and concludes that the seismic Category I equipment can withstand seismic design basis loads without loss of safety function.
	iii) Inspection will be performed for the existence of a report verifying that the as-installed equipment including anchorage is seismically bounded by the tested or analyzed conditions.	iii) A report exists and concludes that the as-installed equipment including anchorage is seismically bounded by the tested or analyzed conditions.

Table 2.15.7-2

ITAAC For The Containment Monitoring System

Design Commitment	Inspections, Tests, Analyses	Acceptance Criteria
7. The equipment qualification of CMS components is addressed in Tier 1 Section 3.8.	See Tier 1 Section 3.8.	See Tier 1 Section 3.8.
8. The containment isolation portions of the CMS system are addressed in Tier 1, Subsection 2.15.1.	See Tier 1 Subsection 2.15.1.	See Tier 1 Subsection 2.15.1.
9. CMS software is developed in accordance with the software development program described in Section 3.2.	See Section 3.2.	See Section 3.2.

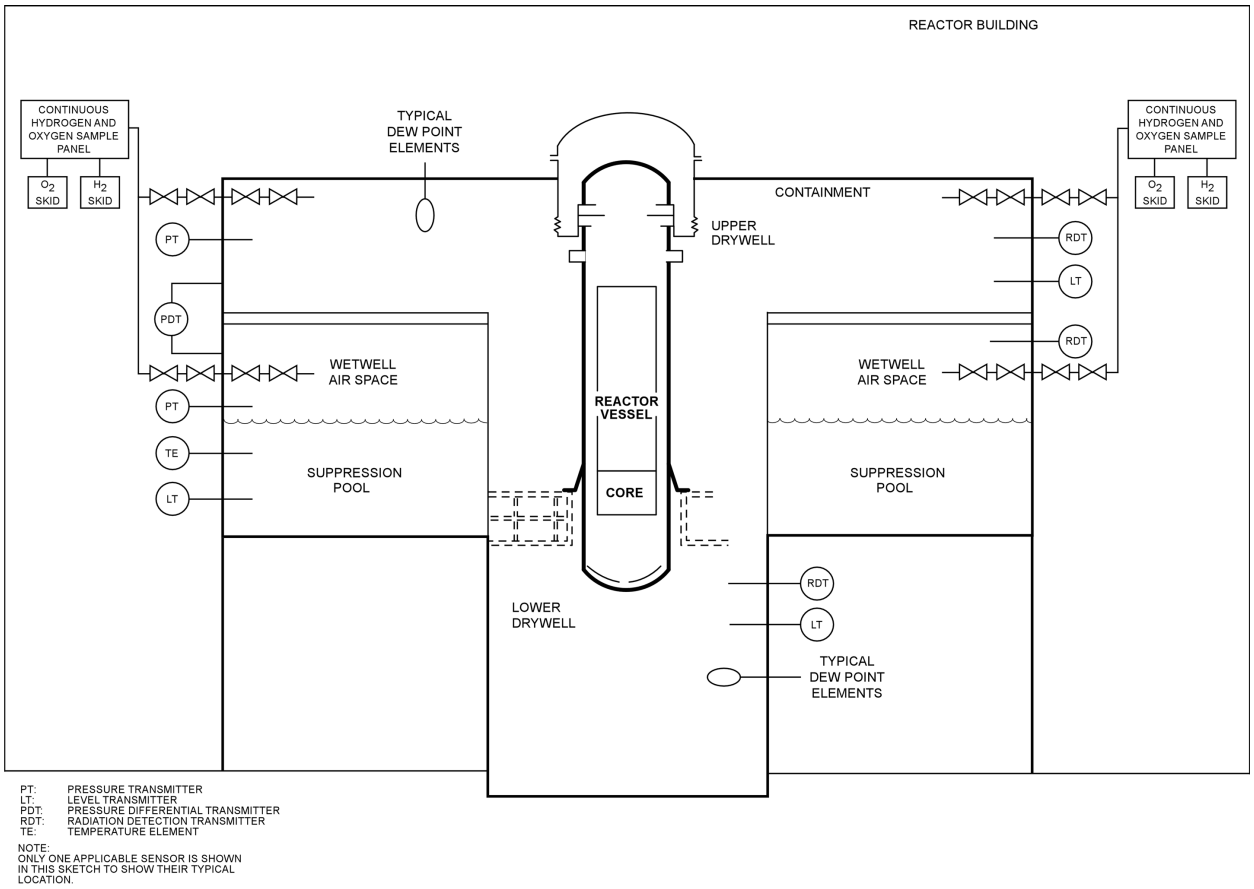

Figure 2.15.7-1. Containment Monitoring System Functional Arrangement

2.16 STRUCTURES AND SERVICING SYSTEMS/EQUIPMENT

2.16.1 Cranes, Hoists and Elevators

Design Description

Cranes and hoists are used for maintenance and refueling tasks. The reactor building (RB) crane, fuel building (FB) crane and associated lifting devices, such as hoists, and elevators in various areas of the plant are nonsafety-related.

(1) The RB crane has a lifting capacity greater than its heaviest expected load.

(2) The FB crane has a lifting capacity greater than its heaviest expected load.

(3) The RB crane is interlocked to prevent movement of heavy loads over new or spent fuel in the RB.

(4) The FB crane is interlocked to prevent movement of heavy loads over spent fuel in the FB.

(5) The RB crane is classified as Seismic Category I to maintain crane structural integrity.

(6) The FB crane is classified as Seismic Category I to maintain crane structural integrity.

Inspections, Tests, Analyses and Acceptance Criteria

Table 2.16.1-1 provides a definition of the inspections, test and/or analyses, together with associated acceptance criteria for the Cranes, Hoists and Elevators.

Table 2.16.1-1

ITAAC For The Cranes, Hoists and Elevators

Design Commitment	Inspections, Tests, Analyses	Acceptance Criteria
1. The RB crane has a lifting capacity greater than its heaviest expected load.	A load test at 125% of the rated capacity will be performed.	Report documents that the RB crane is successfully load tested at 125% of its rated capacity.
2. The FB crane has a lifting capacity greater than its heaviest expected load.	A load test at 125% of the rated capacity will be performed.	Report documents that the FB crane is successfully load tested at 125% of its rated capacity.
3. The RB crane is interlocked to prevent movement of heavy loads over new or spent fuel in the RB.	Tests will be conducted of the as-built RB crane movement using a heavy load.	Report documents that the RB crane interlock prevents the carrying of a load greater than one fuel assembly and its associated handling device over new or spent fuel in the RB.
4. The FB crane is interlocked to prevent movement of heavy loads over spent fuel in the FB.	Tests will be conducted of the as-built FB crane movement using a heavy load.	Report documents that the FB crane interlock prevents the carrying of a load greater than one fuel assembly and its associated handling device over spent fuel storage in the FB.
5. The RB crane is classified as Seismic Category I to maintain crane structural integrity.	Inspection and analyses of the as-built RB crane will be performed to verify that the design meets Seismic Category I requirements.	Report documents that the RB crane conforms to Seismic Category I requirements.
6. The FB crane is classified as Seismic Category I to maintain crane structural integrity.	Inspection and analyses of the as-built FB crane will be performed to verify that the design meets Seismic Category I requirements.	Report documents that the FB crane conforms to Seismic Category I requirements.

2.16.2 Heating, Ventilating and Air-Conditioning Systems

2.16.2.1 Reactor Building HVAC

Design Description

The Reactor Building HVAC System (RBVS) serves the Reactor Building. The RBVS consists of three subsystems. The Reactor Building Clean Area HVAC Subsystem (CLAVS) serves the clean (non-radiologically controlled) areas of the Reactor Building and is shown in Figure 2.16.2-1. The Reactor Building Contaminated Area HVAC Subsystem (CONAVS) serves the potentially contaminated areas of the Reactor Building and is shown in Figure 2.16.2-2. The Reactor Building Refueling and Pool Area HVAC Subsystem (REPAVS) serves the refueling area of the Reactor Building and is shown in Figure 2.16.2-3.

The RBVS automatically isolates the Reactor Building boundary (CONAVS and REPAVS subsystems) during accidents. The isolation dampers and ducting penetrating the Reactor Building boundary, and associated controls that provide the isolation signal are safety-related. Safety-related components for the RBVS are listed in Table 2.16.2-1.

The remaining portion of the RBVS is nonsafety-related.

(1) The functional arrangement of the RBVS is as described in the Design Description of this Subsection 2.16.2.1 and as shown in Figures 2.16.2-1, 2.16.2-2 and 2.16.2-3.

(2) The RBVS isolation dampers automatically close upon receipt of a high radiation signal or (CONAVS and REPAVS) loss of AC power(CONAVS, REPAVS and CLAVS).

(3) The safety-related components identified in Table 2.16.2-1 can withstand Seismic Category I loads without loss of safety-related function.

(4) The RBVS maintains the hydrogen concentration levels in the battery rooms below 2% by volume.

(5) CONAVS maintains served areas of the reactor building at a slightly negative pressure relative to surrounding clean areas to minimize the exfiltration of potentially contaminated air.

(6) REPAVS maintains served areas of the reactor building at a slightly negative pressure relative to surrounding clean areas to minimize the exfiltration of potentially contaminated air.

(7) The RBVS provides post 72-hour cooling for DCIS, CRD and RWCU pump rooms, electrical cabinet cooling and CRD/RWCU motor cooling.

(8) Indications and controls for safety-related components of the RBVS as indicated in Table 2.16.2-1 are available in the main control room (MCR).

(9) Independence is provided between safety-related divisions, and between safety-related divisions and nonsafety-related equipment.

(10) RBVS software that controls the safety-related RBVS components is developed in accordance with the software development program described in Section 3.2.

(11) The Reactor Building Purge Exhaust Filters are tested to meet RG 1.140 and ASME AG-1 requirements for HEPA and carbon filter efficiency.

Inspections, Tests, Analyses and Acceptance Criteria

Table 2.16.2-2 provides the design commitments, inspections, tests, analyses and acceptance criteria for the RBVS system.

2.16.2.2 Control Building HVAC System

Design Description

The Control Building HVAC consists of two independent subsystems. The Control Room Habitability Area HVAC Subsystem (CRHAVS) serves the MCR and associated areas bounded by the Control Room Habitability Area (CRHA) envelope. The Control Building General Area HVAC Subsystem (CBGAVS) serves the areas inside the Control Building but outside the CRHA. Table 2.16.2-3 lists the major Control Building HVAC system safety-related components.

Both of these subsystems are nonsafety-related except for that portion of the CRHAVS that forms the CRHA boundary envelope, and the CRHAVS Emergency Filter Units (EFU) and associated components, which are safety-related. This safety-related CRHA boundary envelope consists of the CRHA structure, doors, penetrations, redundant boundary isolation dampers, valves, and that portion of transition ductwork, piping, or tubing that is located between the CRHA boundary structure and the redundant CRHA isolation dampers or valves. The CRHA isolation dampers are the major components discussed in this Subsection. Additional systems, structures, and components (such as EFUs) that are necessary for habitability are discussed in other subsections.

The mechanical cooling of the Control Building General Areas and the CRHA is not provided as a safety-related function during a CRHA boundary isolation. Passive means of limiting CRHA and general area temperature rise to acceptable levels have been provided by the ESBWR design for the first 72-hours.

The CRHAVS serves the MCR and associated support areas during normal plant operations, plant start-up and plant shutdown and is shown in Figure 2.16.2-4. The CBGAVS serves the areas outside the CRHA and is shown in Figures 2.16.2-5a and 2.16.2-5b.

(1) The functional arrangement of the CRHAVS is as described in the Design Description of this Subsection 2.16.2.2 and is as shown in Figure 2.16.2-4.

(2) The CRHA isolation dampers automatically close upon receipt of any of the following signals:

   a. high radiation in the CRHAVS intake;

   b. high radiation downstream of an Emergency Filter Unit (EFU) during emergency operation;

   c. low airflow through an EFU during emergency operation;

   d. loss of AC power.

(3) The safety-related components identified in Table 2.16.2-3 can withstand Seismic Category I loads without loss of safety-related function.

(4) The CRHAVS heat sink passively maintains the temperature of the CRHA within an acceptable range for the first 72 hours following a design basis accident.

(5) Independence is provided between safety-related divisions, and between safety-related divisions and nonsafety-related equipment.

(6) CRHA isolation damper and EFU operational status (Open/Closed) indication is provided in the MCR.

(7) The free air volume of the control room envelope is greater than or equal to the volume assumed in safety analyses.

(8) Normal operation intake flow rate is greater than or equal to the flow rate assumed in the safety analyses.

(9) CRHAVS software that controls the safety-related CRHAVS components is developed in accordance with the software development program described in Section 3.2.

(10) CRHAVS Air Handling Units and Auxiliary Cooling Units support post-72 hour control room habitability cooling and cooling for post-accident monitoring heat loads.

Inspections, Tests, Analyses and Acceptance Criteria

Table 2.16.2-4 provides definitions of the inspections, test and/or analyses, together with associated acceptance criteria for the Control Building HVAC.

2.16.2.3 Emergency Filter Units

Design Descriptions

The Emergency Filter Units (EFU) supply pressurized breathing air to the Control Room Habitability Area (CRHA) during isolation of the CRHA boundary envelope. The EFUs are safety-related and maintain habitable conditions in the CRHA to ensure the safety of the control room operators. An EFU is automatically initiated upon CRHA isolation to provide breathing air and pressurization of the CRHA to minimize infiltration. There are two independent, redundant EFU trains capable of supplying sufficient air and CRHA pressurization for 72 hours. The EFUs are part of the CRHAVS, and a simplified system diagram is provided in Figure 2.16.2-4. Design information on safety-related equipment is provided in Table 2.16.2-5.

(1) The functional configuration of the EFU is as described in the Design Description of this Subsection 2.16.2.3 and as shown in Figure 2.16.2-4.

(2) The selected redundant EFU dampers open upon receipt of a control room habitability envelope isolation signal.

(3) The safety-related EFU components identified in Table 2.16.2-5 can withstand Seismic Category I loads without loss of safety-related function.

(4) Independence for the EFU trains is provided between safety-related divisions, and between safety-related divisions and nonsafety-related equipment.

(5)

a. EFUs maintain the CRHA at the minimum positive pressure with respect to the surrounding areas at the required air addition flow rate..

b. The in-leakage does not exceed the unfiltered in-leakage assumed by control room operator dose analysis.

(6) The powered EFU dampers can be remotely operated from the MCR.

(7) EFUs meet the in-place leakage testing requirements of ASME AG-1 and RG 1.52.

(8) Indications and controls for the safety-related components of the EFU system as indicated in Table 2.16.2-5 are available in the MCR.

(9) Deleted

(10) EFUs are tested to meet the requirements described in ASME AG-1 for HEPA and carbon adsorber efficiency.

(11) The standby EFU starts on a low flow signal from the operating EFU.

(12) EFUs maintain habitable conditions in the CRHA for 72 hours.

(13) EFU software that controls the safety-related EFU components is developed in accordance with the software development program described in Section 3.2.

Inspections, Tests, Analyses and Acceptance Criteria

Table 2.16.2-6 provides the design commitments, inspections, tests, analyses and acceptance criteria for the EFUs.

2.16.2.4 Turbine Building HVAC System

Design Description

The Turbine Building Ventilation System (TBVS) is nonsafety-related. The TBVS includes the Turbine Building supply air fans and associated AHUs, and the Turbine Building exhaust fans and associated filter trains.

The Turbine Building Ventilation System is designed to minimize exfiltration of air to adjacent areas by maintaining a slightly negative pressure in the Turbine Building relative to adjacent areas.

(1) The functional arrangement of the Turbine Building Ventilation System (TBVS) is as described in the Design Description of this Subsection 2.16.2.4 and is as shown in Figure 2.16.2-6.

(2) The TBVS provides post 72-hour cooling for DCIS in the Turbine Building and room cooling for the Nuclear Island Chilled Water System and RCCW pumps.

Inspections, Tests, Analyses and Acceptance Criteria

Table 2.16.2-7 provides the design commitments, inspections, tests, analyses and acceptance criteria for the Turbine Building HVAC System.

2.16.2.5 Fuel Building HVAC System

Design Description

The Fuel Building HVAC system (FBVS) does not perform any safety-related functions, except for automatic isolation of the Fuel Building ventilation systems to mitigate the consequences of fuel handling accidents with significant radiological releases. The Fuel Building HVAC subsystems include the Fuel Building General Area HVAC Subsystem (FBGAVS) shown in Figure 2.16.2-7 and the Fuel Building Fuel Pool HVAC Subsystem (FBFPVS) shown in Figure 2.16.2-8.

(1) The functional arrangement of the FBVS is as described in the Design Description of this Subsection 2.16.2.5 and as shown in Figures 2.16.2-7 and 2.16.2-8.

(2) The Fuel Building HVAC isolation dampers automatically close upon receipt of a high radiation signal.

(3) The safety-related components identified in Table 2.16.2-8 can withstand Seismic Category I loads without loss of safety-related function.

(4) The FBVS maintains the fuel building at a slightly negative pressure relative to surrounding areas.

(5) The FBVS provides post 72-hour cooling for FAPCS pump motors and N-DCIS.

(6) Indications and controls for the safety-related components of the FBVS as indicated in Table 2.16.2-8 are available in the MCR.

Inspections, Tests, Analyses and Acceptance Criteria

Table 2.16.2-9 provides the design commitments, inspections, tests, analyses and acceptance criteria for the Fuel Building HVAC.

2.16.2.6 Radwaste Building HVAC System

No ITAAC are required for this system.

2.16.2.7 Electrical Building HVAC System

Design Description

The Electrical Building Ventilation System (EBVS) is nonsafety-related and includes three subsystems. The Electric and Electronic Rooms HVAC Subsystem (EERVS), the Technical Support Center HVAC Subsystem (TSCVS), and the Diesel Generators HVAC Subsystem (DGVS).

(1) The functional arrangment of the Electrical Building Ventilation System (EBVS) is as described in the Design Description of this Subsection 2.16.2.7 and is as shown in Figure 2.16.2-9.

(2) The EBVS provides post 72-hour cooling for Diesel Generators and safety-related Electrical Distribution and support for electrical power to FAPCS.

Inspections, Tests, Analyses and Acceptance Criteria

Table 2.16.2-10 provides the design commitments, inspections, tests, analyses and acceptance criteria for the Electrical Building HVAC System.

2.16.2.8 Other Building HVAC Systems

No ITAAC are required for this system.

Table 2.16.2-1

Reactor Building HVAC System Safety-Related Components

Component	Seismic Category	ASME Code Classification	Fail Safe Position
CONAVS building supply air isolation dampers	I	AG-1	Closed
CONAVS building exhaust air isolation dampers	I	AG-1	Closed
CLAVS building supply air isolation dampers	I	AG-1	Closed
CLAVS building exhaust air isolation dampers	I	AG-1	Closed
REPAVS building supply air isolation dampers	I	AG-1	Closed
REPAVS building exhaust air isolation dampers	I	AG-1	Closed

Table 2.16.2-2

ITAAC For The Reactor Building HVAC

Design Commitment	Inspections, Tests, Analyses	Acceptance Criteria
1. The functional arrangement of the RBVS is as described in the Design Description of this Subsection 2.16.2.1 and as shown in Figures 2.16.2-1, 2.16.2-2 and 2.16.2-3.	Inspections of the RBVS configuration will be conducted.	Inspection report(s) document that the as-built RBVS conforms to the description in Subsection 2.16.2.1 and is as shown in Figures 2.16.2-1, 2.16.2-2 and 2.16.2-3.
2. The RBVS isolation dampers automatically close upon receipt of a high radiation signal or loss of AC power.	Testing of the RBVS isolation dampers will be performed using simulated signals to close the RBVS isolation dampers.	Test report(s) document that upon receipt of a simulated high radiation signal or a simulated loss of AC power signal, the as-built RBVS isolation dampers automatically close.
3. The safety-related components identified in Table 2.16.2-1 can withstand Seismic Category I loads without loss of safety-related function.	a) Type tests, analyses, or a combination of type tests and analyses of Seismic Category I equipment will be performed using analytical assumptions, or under conditions, which bound the Seismic Category I design requirements. b) Inspection and analyses will be performed to verify that the as-built components identified in Table 2.16.2-1, including anchorage, are seismically bounded by the testing or analyzed conditions.	a) A report exists and concludes that the components identified in Table 2.16.2-1 can withstand design basis loads without loss of safety-related function. b) A report exists and concludes that the as-built components identified in Table 2.16.2-1, including anchorage have been tested or analyzed under the conditions necessary to ensure compliance with Seismic Category I design requirements.

Table 2.16.2-2

ITAAC For The Reactor Building HVAC

Design Commitment	Inspections, Tests, Analyses	Acceptance Criteria
4. The RBVS maintains the hydrogen concentration levels in the battery rooms below 2% by volume.	Testing and analysis of the system will be performed to demonstrate the air flow capability of the RBVS is adequate to maintain the hydrogen concentration levels in the battery rooms below 2%.	Analysis and test report(s) demonstrate that the air flow capability of the as-built RBVS is adequate to maintain the hydrogen concentration levels in the battery rooms below 2%.
5. CONAVS maintains served areas of the reactor building at a slightly negative pressure relative to surrounding clean areas to minimize the exfiltration of potentially contaminated air.	a) Testing will be performed to confirm that the contaminated areas of the reactor building served by CONAVS maintain a minimum negative pressure of 62 Pa (-1/4 inch W.G.) relative to surrounding clean areas when operating CONAVS supply and exhaust fans in the normal system fan lineup. b) Testing will be performed to confirm the ventilation flow rate through the contaminated areas of the reactor building served by CONAVS when operating CONAVS supply and exhaust fans in the normal system fan lineup.	a) Test report(s) document that the time average pressure differential in the as-built CONAVS served areas of the reactor building as measured by each of the pressure differential indicators is minimum negative pressure of 62 Pa (-1/4 inch W.G.). b) Test report indicating the exhaust flow rate is greater than or equal to the as-built CONAVS supply flow rate.

Table 2.16.2-2

ITAAC For The Reactor Building HVAC

Design Commitment	Inspections, Tests, Analyses	Acceptance Criteria
6. REPAVS maintains served areas of the reactor building at a slightly negative pressure relative to surrounding clean areas to minimize the exfiltration of potentially contaminated air.	a) Testing will be performed to confirm that the refueling area of the reactor building served by REPAVS maintains a minimum negative pressure of 62 Pa (-1/4 inch W.G.) relative to surrounding clean areas when operating REPAVS supply and exhaust fans in the normal system fan lineup. b) Testing will be performed to confirm the ventilation flow rate through the refueling area of the reactor building served by REPAVS when operating REPAVS supply and exhaust fans in the normal system fan lineup.	a) Test report(s) document that the time average pressure differential in the as-built REPAVS served areas of the reactor building as measured by each of the pressure differential indicators is minimum negative pressure of 62 Pa (-1/4 inch W.G.). b) Test report indicating the exhaust flow rate is greater than or equal to the as-built REPAVS supply flow rate.
7. The RBVS provides post 72-hour cooling for DCIS , CRD and RWCU pump rooms, electrical cabinet cooling and CRD / RWCU motor cooling.	Testing of the integrated system will be performed to demonstrate the air flow capability of the RBVS to support post-72 hour cooling for DCIS, CRD and RWCU pump rooms, electrical cabinet cooling and CRD / RWCU motor cooling.	A report documents that the integrated system test demonstrates the air flow capability to support post-72 hour cooling for DCIS, CRD and RWCU pump rooms, electrical cabinet cooling and CRD / RWCU motor cooling.
8. Indications and controls for safety-related components of the RBVS as indicated in Table 2.16.2-1 are available in the main control room (MCR).	Inspection of the MCR will be performed to verify that the safety-related system functions of the RBVS are available.	Inspection report(s) document that indications and controls for the safety-related components of the RBVS as indicated in Table 2.16.2-1 are available in the MCR.

Table 2.16.2-2

ITAAC For The Reactor Building HVAC

Design Commitment	Inspections, Tests, Analyses	Acceptance Criteria
9. Independence is provided between safety-related divisions, and between safety-related divisions and nonsafety-related equipment.	a) Tests will be performed on the RBVS dampers by providing a test signal in only one safety-related division at a time. b) Inspection of the as-built safety-related divisions in the system will be performed.	a) Test reports document that the test signal exists only in the safety-related division under test in the as-built RBVS damper. b) Inspection reports document that physical separation or electrical isolation exists between as-built RBVS dampers. Physical separation or electrical isolation exists between safety-related divisions and nonsafety-related equipment.
10. RBVS software that controls the safety-related RBVS components is developed in accordance with the software development program described in Section 3.2.	See Section 3.2.	See Section 3.2.
11. The Reactor Building Purge Exhaust Filters meet RG 1.140 and ASME AG-1 requirements for HEPA and carbon filter efficiency	Each charcoal adsorber will be tested in accordance with RG 1.140. HEPA filters will be tested in accordance with ASME AG-1, Section FC.	Test report(s) document that the as-built RB Purge Exhaust filter efficiency meet the acceptance criteria for in place testing in accordance with RG 1.140 and ASME AG-1.

Table 2.16.2-3

Control Building HVAC System Safety-Related Components

Component	Seismic Category	ASME Code Classification	Notes
CRHA supply air isolation dampers	I	AG-1	Fail Closed
Deleted			
CRHA Restroom Exhaust isolation dampers	I	AG-1	Fail Closed
CRHA Smoke Exhaust intake isolation dampers	I	AG-1	Fail Closed
CRHA Smoke Exhaust output isolation dampers	I	AG-1	Fail Closed
Deleted			

Table 2.16.2-4

ITAAC For The Control Building Habitability HVAC Subsystem

Design Commitment	Inspections, Tests, Analyses	Acceptance Criteria
1. The functional arrangement of the CRHAVS is as described in the Design Description of this Subsection 2.16.2.2 and as shown in Figure 2.16.2-4.	Inspections of the CRHAVS configuration will be conducted.	Inspection report(s) document that the as-built CRHAVS conforms to the design description in this Subsection 2.16.2.2 and is as shown in Figure 2.16.2-4.
2. The CRHA isolation dampers automatically close upon receipt of any of the following signals: a. high radiation in the CRHAVS intake; b. high radiation downstream of an Emergency Filter Unit (EFU) during emergency operation; c. low airflow through an EFU during emergency operation; or d. loss of AC power.	Testing of the CRHA isolation dampers will be performed using simulated signals to close the CRHA isolation dampers.	Test reports document that the as-built CRHA isolation dampers automatically close upon receipt of any of the following simulated signals: a. high radiation in the CRHAVS intake; b. a high radiation downstream of an Emergency Filter Unit (EFU) during emergency operation; c. low airflow through an EFU during emergency operation; or d. a loss of AC power signal

Table 2.16.2-4

ITAAC For The Control Building Habitability HVAC Subsystem

Design Commitment	Inspections, Tests, Analyses	Acceptance Criteria
3. The safety-related components identified in Table 2.16.2-3 can withstand Seismic Category I loads without loss of safety-related function.	a. Type tests, analyses, or a combination of type tests and analyses of safety-related Seismic Category I equipment will be performed. b. Inspection will be performed for the existence of a report verifying that the as-built equipment identified in Table 2.16.2-3, including anchorage, is seismically bounded by the testing or analyzed conditions.	a) A report exists and concludes that the equipment identified in Table 2.16.2-3 can withstand seismic design basis without loss of safety-related function. b) A report exists and concludes that the as-built equipment identified in Table 2.16.2-3, including anchorage, conforms to tested or analyzed conditions necessary to ensure functioning following a SSE.
4. The CRHAVS heat sink passively maintains the temperature of the CRHA within an acceptable range for the first 72 hours following a design basis accident.	An analysis will be performed using the as-built heat sink dimensions, the as-built heat sink thermal properties, the as built heat sink exposed surface area, the as built thermal properties of materials covering parts of the heat sink, and the as-built heat loads to confirm the results of the control room heat up analysis..	Report(s) exists and concludes that the CRHA temperature rise will not exceed 8.3 C (15 F) on a loss of active cooling for 72 hours given design basis accident conditions and an initial CRHA heat sink temperature of 25.6 C (78 F) and CRHA HVAC rooms at 40 C (104 F).

Table 2.16.2-4

ITAAC For The Control Building Habitability HVAC Subsystem

Design Commitment	Inspections, Tests, Analyses	Acceptance Criteria
5. Independence is provided between safety-related divisions, and between safety-related divisions and nonsafety-related equipment.	a. Tests will be performed on CRHA isolation damper and EFU operation by providing a test signal in only one safety-related division at a time. b. Inspection of the as-built safety-related divisions in the system will be performed.	a. Test reports document that the test signal exists only in the safety-related division under test in the as-built CRHA isolation damper and EFU control. b. Inspection reports document that Physical separation or electrical isolation exists between as-built CRHA isolation dampers and EFU safety-related divisions. Physical separation or electrical isolation exists between safety-related divisions and nonsafety-related equipment.
6. CRHA isolation damper and EFU operational status (Open/Closed) indication is provided in the MCR.	a. Inspection will be performed to verify CRHA isolation damper and EFU operational status indication is installed in the MCR. b. Testing will be performed to show that the operational status indication in the MCR accurately depicts the operational status of the CRHA isolation dampers and EFUs.	a. Inspection report(s) document that the as-built CRHA isolation damper and EFU operational status indication is provided in the MCR. b. A report exists and concludes that the operational status indication accurately depicts the operational status of the as-built CRHA isolation dampers and EFUs.
7. The free air volume of the control room envelope is greater than or equal to the volume assumed in safety analyses.	Analyses to be performed based on the as-built control room envelope to determine the free air volume (total volume minus equipment, walls, etc.).	A report exists and concludes that the free air volume of the control room envelop is ≥ 2,200 m^3 (78,000 ft^3).

Table 2.16.2-4

ITAAC For The Control Building Habitability HVAC Subsystem

Design Commitment	Inspections, Tests, Analyses	Acceptance Criteria
8. Normal operation intake flow rate is greater than or equal to the flow rate assumed in the safety analyses.	Inspections will be performed to verify the normal operation intake flow rate.	A report exists and concludes that the flow rate is ≥ 200 l/s (424 cfm).
9. CRHAVS software that controls the safety-related CRHAVS components is developed in accordance with the software development program described in Section 3.2.	See Section 3.2.	See Section 3.2.
10. CRHAVS Air Handling Units and Auxiliary Cooling Units support post-72 hour control room habitability cooling and cooling for post-accident monitoring heat loads.	Testing of the integrated system will be performed to demonstrate the air-flow capability of the CRHAVS to support post-72 hour cooling for CRHA and Q-DCIS heat loads.	A report documents that the integrated system test demonstrates the air-flow capability to support post-72 hour cooling for CRHA and Q-DCIS heat loads.

Table 2.16.2-5

Emergency Filter Units

Component	Seismic Category	ASME Code	Notes
EFU (fan, HEPA, and charcoal filters)	I	AG-1	Minimum flow rate of 200 l/s (424 cfm) 9.5 l/s (20 cfm) per person for up to 21 persons, Independent trains
EFU supply CRHA isolation dampers, tornado protection dampers and missile protected intake louvers with connecting ducting (including supports)	I	AG-1	Redundant dampers in each independent train
EFU discharge CRHA isolation dampers and connecting ducting (including supports)	I	AG-1	Redundant dampers in each independent train

Table 2.16.2-6

ITAAC For Emergency Filter Units

Design Commitment	Inspections, Tests, Analyses	Acceptance Criteria
1. The functional arrangement of the EFU is as described in the Design Description of this Subsection 2.16.2.3 and as shown in Figure 2.16.2-4.	Inspections of the EFU configuration will be conducted.	Inspection report(s) document that the as-built EFU system conforms with the design description in this Subsection 2.16.2.3 and is as shown in Figure 2.16.2-4.
2. The selected redundant EFU dampers open upon receipt of a control room habitability envelope isolation signal.	Testing of the EFU dampers will be performed using simulated control room habitability envelope isolation signal to open the EFU dampers.	Test report(s) document that upon receipt of a simulated control room habitability envelope isolation signal, the as-built EFU dampers automatically open.
3. The safety-related EFU components identified in Table 2.16.2-5 can withstand Seismic Category I loads without loss of safety-related function.	a) Type tests, analyses, or a combination of type tests and analyses of safety-related Seismic Category I equipment will be performed. b) Inspection will be performed for the existence of a report verifying that the as-built equipment identified in Table 2.16.2-5, including anchorage, is seismically bounded by the testing or analyzed conditions.	a) A report exists and concludes that the equipment identified in Table 2.16.2-5 can withstand seismic design basis without loss of safety-related function. b) A report exists and concludes that the as-built equipment identified in Table 2.16.2-5, including anchorage, conforms to tested or analyzed conditions necessary to ensure functioning following a SSE.

Table 2.16.2-6

ITAAC For Emergency Filter Units

Design Commitment	Inspections, Tests, Analyses	Acceptance Criteria
4. Independence for the EFU trains is provided between safety-related divisions, and between safety-related divisions and nonsafety-related equipment.	a) Tests will be performed on EFUs by providing a test signal in only one safety-related division at a time. b) Inspection of the as-built safety-related divisions in the EFU system will be performed.	a) Test report(s) document that the test signal exists only in the safety-related division under test for the EFU trains. b) Inspection report(s) document that, for the as-built EFU trains, physical separation or electrical isolation exists between these safety-related divisions. Physical separation or electrical isolation exists between safety-related divisions and nonsafety-related equipment.
5. a) EFUs maintain the CRHA at the minimum positive pressure with respect to the surrounding adjacent areas at the required air addition flow rate. b) The in-leakage does not exceed the unfiltered in-leakage assumed by control room operator dose analysis.	a) Testing will be performed to measure the differential pressure between the CRHA and surrounding adjacent areas. b) Tracer gas testing in accordance with ASTM E741 will be performed to measure the unfiltered in-leakage into the CRHA with EFUs operating.	Test report(s) document a) The as-built EFUs maintain the CRHA at a positive pressure of > 31 pascals (0.125 inch water gauge) with respect to the surrounding adjacent areas at the required air addition flow rate. b) The unfiltered in-leakage measured by tracer gas testing does not exceed the unfiltered in-leakage assumed by control room operator dose analysis.
6. The powered EFU dampers can be remotely operated from the MCR.	EFU dampers will be opened and closed using manually initiated signals from the MCR.	Test report(s) document that the as-built EFU dampers open and close when manually imitated signals are sent from the MCR.

Table 2.16.2-6

ITAAC For Emergency Filter Units

Design Commitment	Inspections, Tests, Analyses	Acceptance Criteria
7. EFUs meet the in-place leakage testing requirements of ASME AG-1 and RG 1.52.	EFUs will be in-place leak tested in accordance with ASME AG-1, Section TA, to meet the requirements of RG 1.52.	Test report(s) document that the as-built EFUs meet the acceptance criteria for in-place testing per RG 1.52 when tested in accordance with RG 1.52 and ASME AG-1, Section TA.
8. Indications and controls for the safety-related components of the EFU system as indicated in Table 2.16.2-5 are available in the MCR.	Inspection of the MCR will be performed to verify that the safety-related functions of the EFU system are available.	Inspection report(s) document that indications and controls for the safety-related components of the EFU system as indicated in Table 2.16.2-5 are available in the MCR.
9. Deleted	Deleted	Deleted
10. EFUs are tested to meet the requirements described in ASME AG-1 for HEPA and carbon adsorber filter efficiency.	a. Each charcoal adsorber will be tested in accordance with the requirements described in ASME AG-1, Section FE. b. HEPA filters will be tested in accordance with the requirements described in ASME AG-1, Section FC.	Test report(s) document that the as-built EFU filter efficiency meet the acceptance criteria for in-place testing requirements described in ASME AG-1.
11. The standby EFU starts on a low flow signal from the operating EFU.	Testing will be performed to verify that the operating EFU is isolated and the standby EFU is automatically started on a low flow signal from the operating EFU.	Test report(s) document that a low flow test signal from the operating EFU will start the standby EFU.

Table 2.16.2-6

ITAAC For Emergency Filter Units

Design Commitment	Inspections, Tests, Analyses	Acceptance Criteria
12. EFUs maintain habitable conditions in the CRHA for 72 hours.	Testing will ensure that the filtered air supply will not be reduced below the required 424 cfm when the CRHA is isolated and being maintained at a positive pressure of >31 pascals (0.125 in. wg) with respect to the surrounding adjacent areas.	Test report(s) document that the as-built EFUs provide 424 cfm of filtered air when the CRHA is isolated and being maintained at a positive pressure of >31 pascals (0.125 in. wg) with respect to the surrounding adjacent areas.
13. EFU software that controls the safety-related EFU components is developed in accordance with the software development program described in Section 3.2.	See Section 3.2.	See Section 3.2.

Table 2.16.2-7

ITAAC For Turbine Building Ventilation System

Design Commitment	Inspections, Tests, Analyses	Acceptance Criteria
1. The functional arrangement of the Turbine Building Ventilation System (TBVS) is as described in the Design Description of this Subsection 2.16.2.4 and shown in Figure 2.16.2-6.	Inspections of the TBVS configuration will be conducted.	Inspection report(s) document that the as-built TBVS system conforms with the deisgn description in this Subsection 2.16.2.4 and shown in Figure 2.16.2-6.
2. The TBVS provides post 72-hour cooling for DCIS in the Turbine Building and room cooling for the Nuclear Island Chilled Water System and RCCW pumps.	System testing will be performed and cooling air flow to the specified cubicles will be verified	Test report(s) document that the cooling air flow capability meets the requirements to support post 72-hour cooling for DCIS in the Turbine Building and room cooling for the Nuclear Island Chilled Water System and RCCW pumps.

Table 2.16.2-8

Fuel Building HVAC System Safety-Related Components

Component	Seismic Category	ASME Code Classification	Fail Safe Position
FBGAVS building supply air isolation dampers	I	AG-1	Closed
FBGAVS building exhaust air isolation dampers	I	AG-1	Closed
FBFPVS building supply air isolation dampers	I	AG-1	Closed
FBFPVS building exhaust air isolation dampers	I	AG-1	Closed

Table 2.16.2-9

ITAAC For The Fuel Building HVAC

Design Commitment	Inspections, Tests, Analyses	Acceptance Criteria
1. The functional arrangement of the FBVS is as described in the Design Description of this Subsection 2.16.2.5 and as shown in Figures 2.16.2-7 and 2.16.2-8.	Inspections of the Fuel Building HVAC configuration will be conducted.	Inspection report(s) document that the as-built FBVS system conforms to the design description in this Subsection 2.16.2.5 and as shown in Figures 2.16.2-7 and 2.16.2-8.
2. The Fuel Building HVAC isolation dampers automatically close upon receipt of a high radiation signal.	Using a simulated high radiation signal, tests will be performed on the (Fuel Building HVAC isolation dampers) isolation logic.	Upon receipt of a simulated high radiation signal, the Fuel Building HVAC isolation dampers automatically close.
3. The safety-related components identified in Table 2.16.2-8 can withstand Seismic Category I loads without loss of safety-related function.	a) Type tests, analyses, or a combination of type tests and analyses of safety-related Seismic Category I equipment will be performed. b) Inspection will be performed for the existence of a report verifying that the as-built equipment identified in Table 2.16.2-8, including anchorage, is seismically bounded by the testing or analyzed conditions.	a) A report exists and concludes that the equipment identified in Table 2.16.2-8 can withstand seismic design basis events without loss of safety-related function. b) A report exists and concluded that the as-built FBVS equipment, including anchorage, conforms to tested or analyzed conditions necessary to ensure functioning following a SSE.

Table 2.16.2-9

ITAAC For The Fuel Building HVAC

Design Commitment	Inspections, Tests, Analyses	Acceptance Criteria
4. The FBVS maintains the fuel building at a slightly negative pressure relative to surrounding areas.	a) Testing will be performed to confirm that the FBVS maintains a minimum negative pressure of 62 Pa (-1/4 inch W.G.) when operating FBVS supply and exhaust AHUs in the normal system fan lineup. b) Testing will be performed to confirm the ventilation flow rate through the fuel building area when operating the FBVS supply and exhaust fans in the normal system fan lineup.	a) Test report(s) document that the average differential pressure in the served areas of the fuel building as measured by the pressure differential indicators is a minimum negative pressure of 62 Pa (-1/4 inch W.G.). b). Test report(s) document that the exhaust flow rate is greater than or equal to the FBVS supply flow rate.
5. The FBVS provides post 72-hour cooling for FAPCS pump motors and N-DCIS.	System testing will be performed and cooling air-flow to the specified cubicles will be verified.	Test report(s) documents that the cooling air-flow capability meets the requirements to support post 72-hour cooling for FAPCS pump motors and N-DCIS.
6. Indications and controls for the safety-related components of the FBVS as indicated in Table 2.16.2-8 are available in the MCR.	Inspection of the MCR will be performed to verify that the safety-related indication and control functions of the FBVS are available.	Inspection report(s) document that indications and controls for the safety-related components of the FBVS as indicated in Table 2.16.2-8 are available in the MCR.

Table 2.16.2-10

ITAAC For Electrical Building Ventilation System

Design Commitment	Inspections, Tests, Analyses	Acceptance Criteria
1. The functional arrangement of the Electrical Building Ventilation System (EBVS) is as described in the Design Description of this Subsection 2.16.2.7 and shown in Figure 2.16.2-9.	Inspections of the EBVS configuration will be conducted.	Inspection report(s) document that the as-built EBVS system conforms with the description in Subsection 2.16.2.7 and shown in Figure 2.16.2-9.
2. The EBVS provides post 72-hour cooling for Diesel Generators and Safety-Related Electrical Distribution, and support for electrical power to FAPCS.	System testing will be performed and cooling air flow to the specified cubicles will be verified.	Test report(s) documents that the cooling air flow capability meets the requirements to support post 72-hour cooling for Diesel Generators and safety-related Electrical Distribution, and support for electrical power to FAPCS.

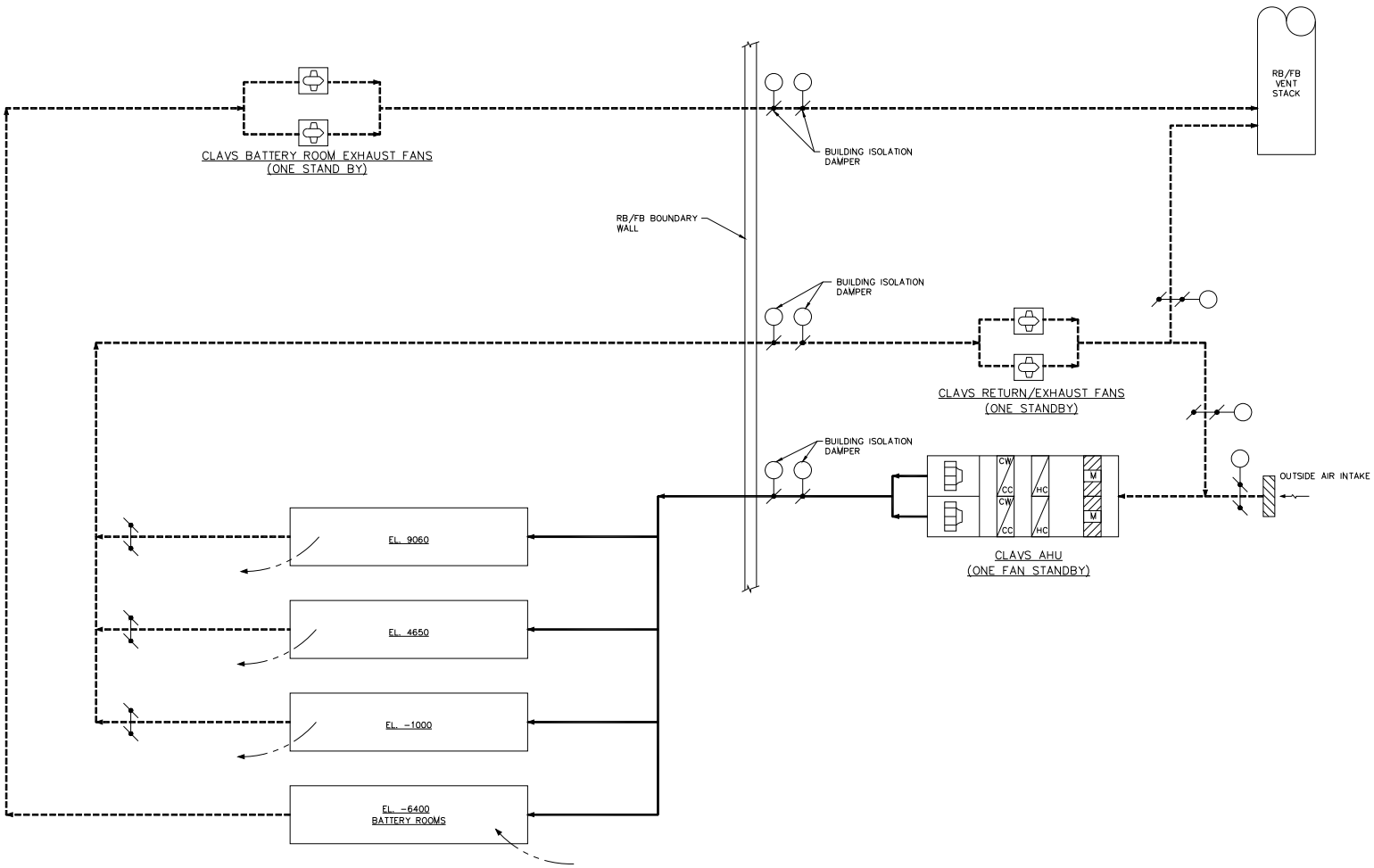

Figure 2.16.2-1. CLAVS Functional Arrangement Diagram

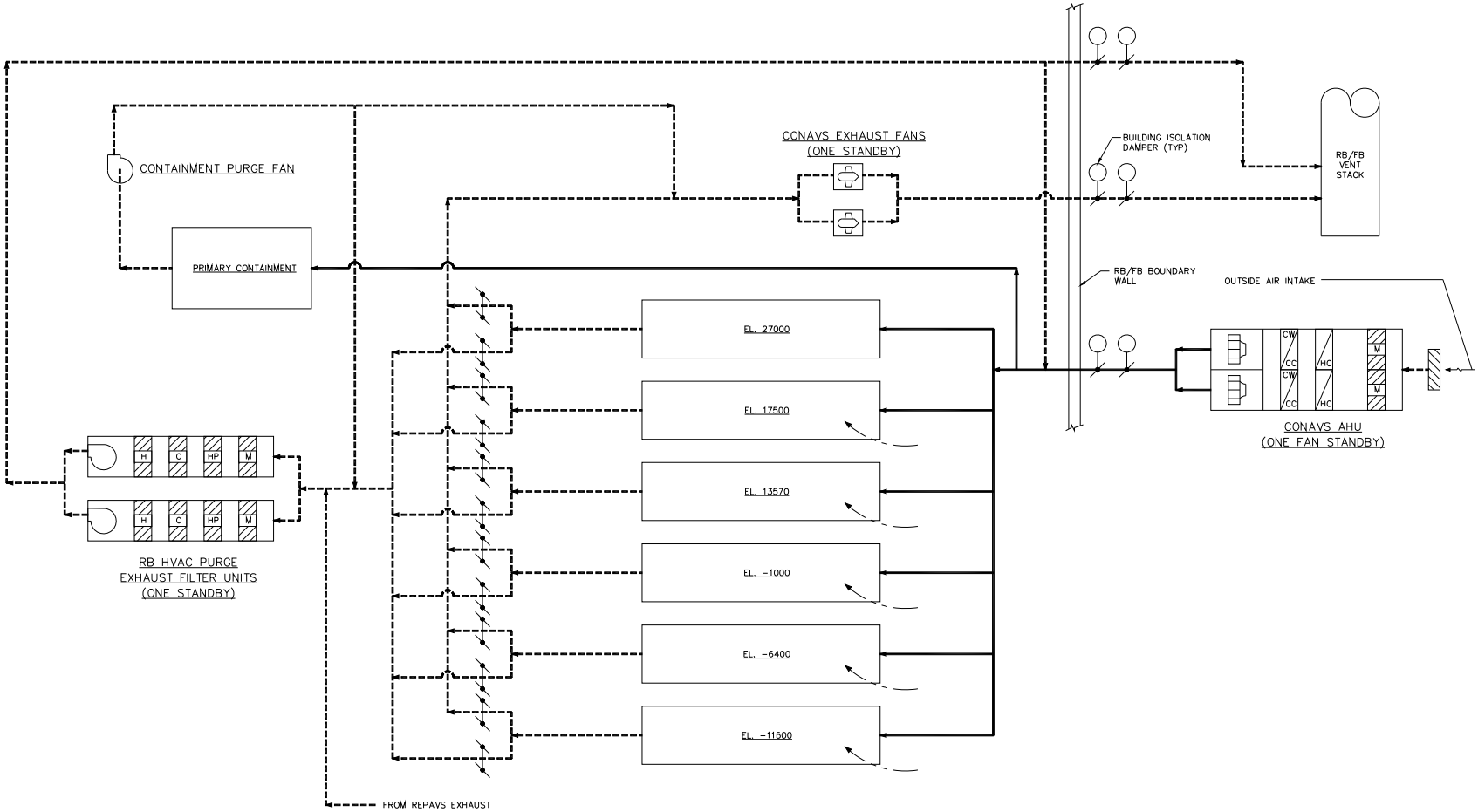

Figure 2.16.2-2. CONAVS Functional Arrangement Diagram

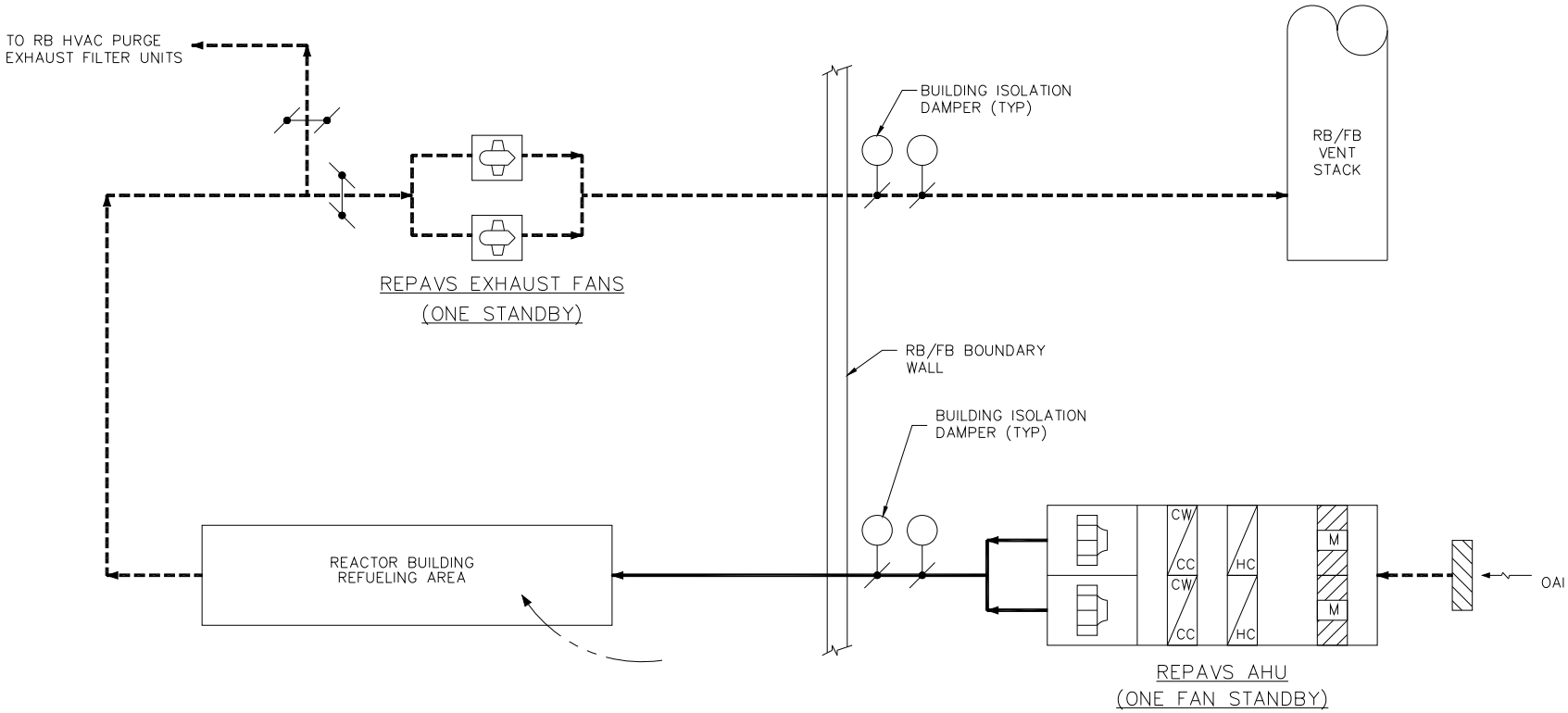

Figure 2.16.2-3. REPAVS Functional Arrangement Diagram

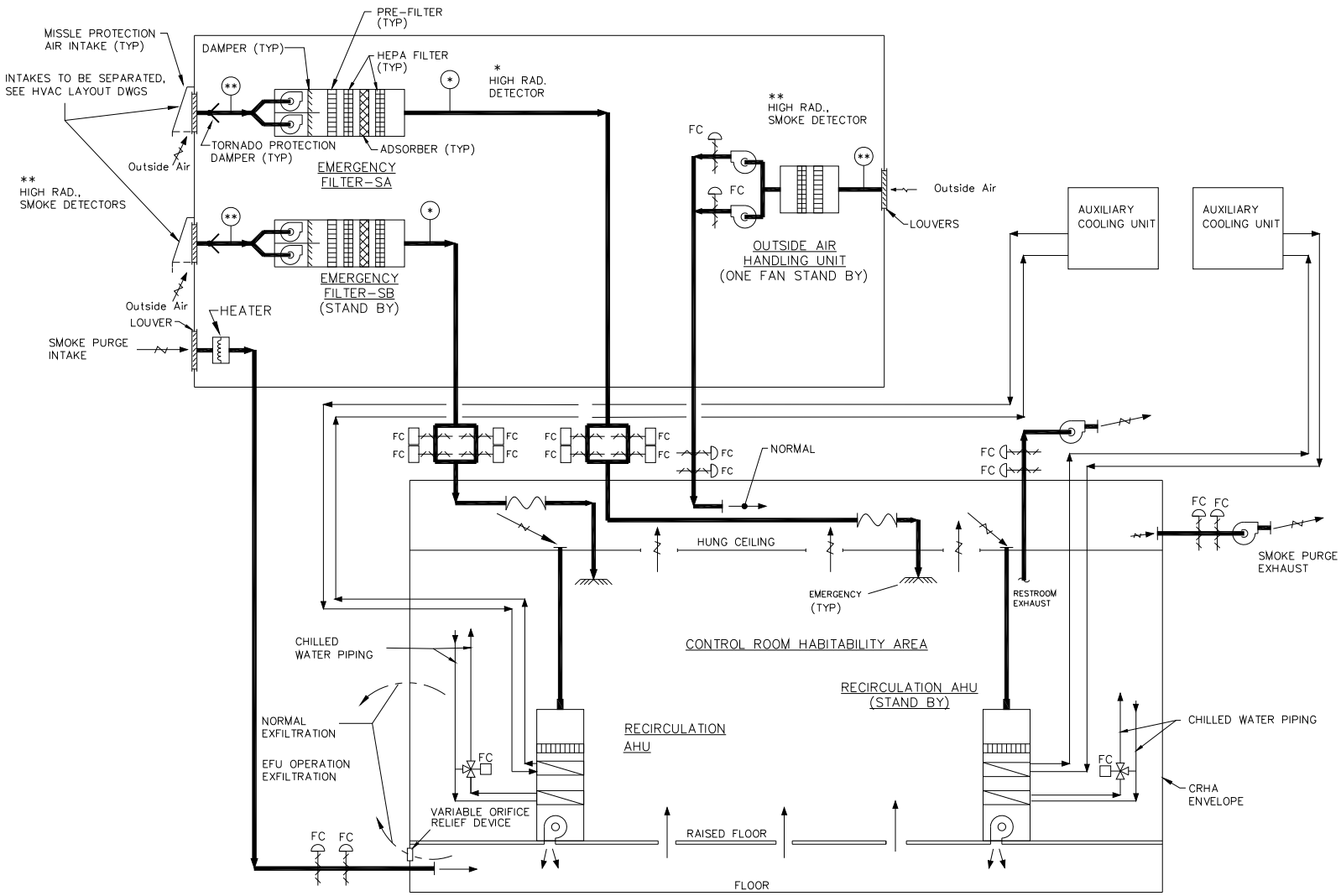

Figure 2.16.2-4. CRHAVS Functional Arrangement Diagram

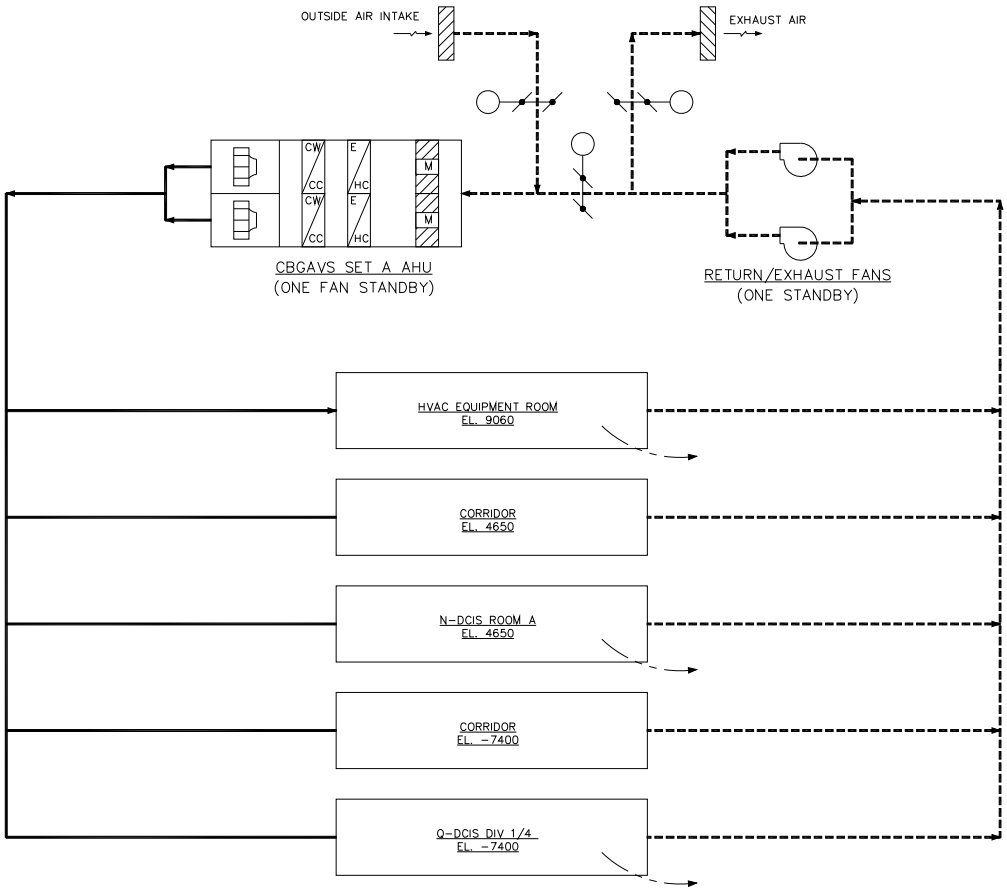

Figure 2.16.2-5a. CBGAVS (Set A) Functional Arrangement Diagram

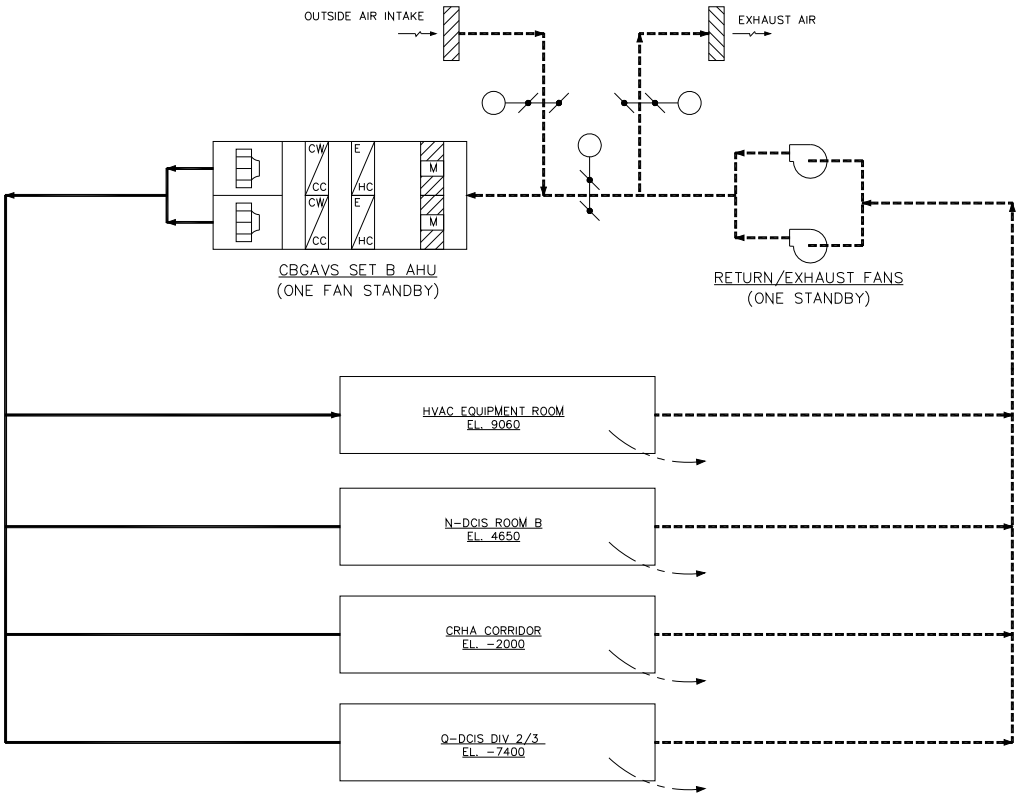

Figure 2.16.2-5b. CBGAVS (Set B) Functional Arrangement Diagram

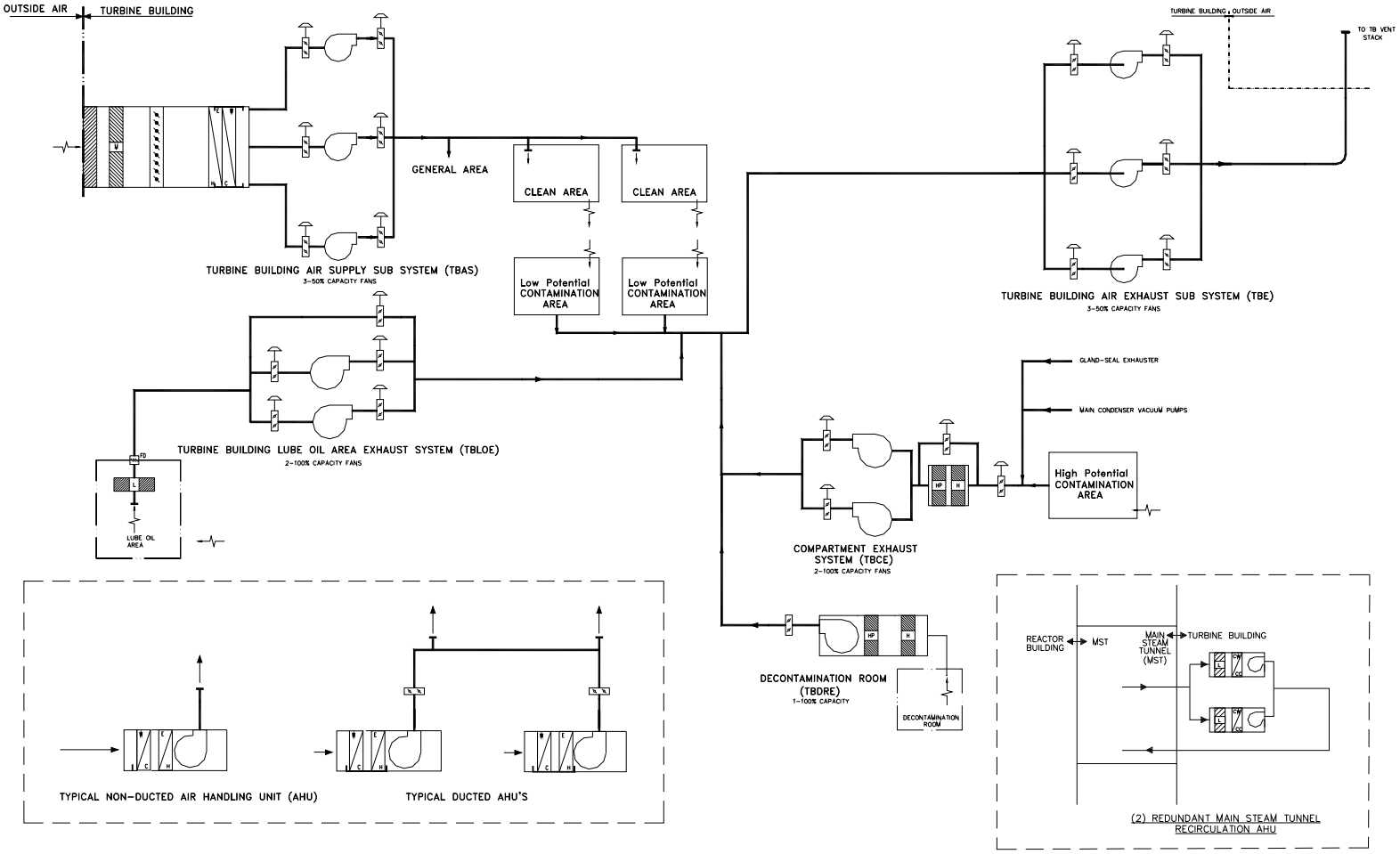

Figure 2.16.2-6. TBVS Functional Arrangement Diagram

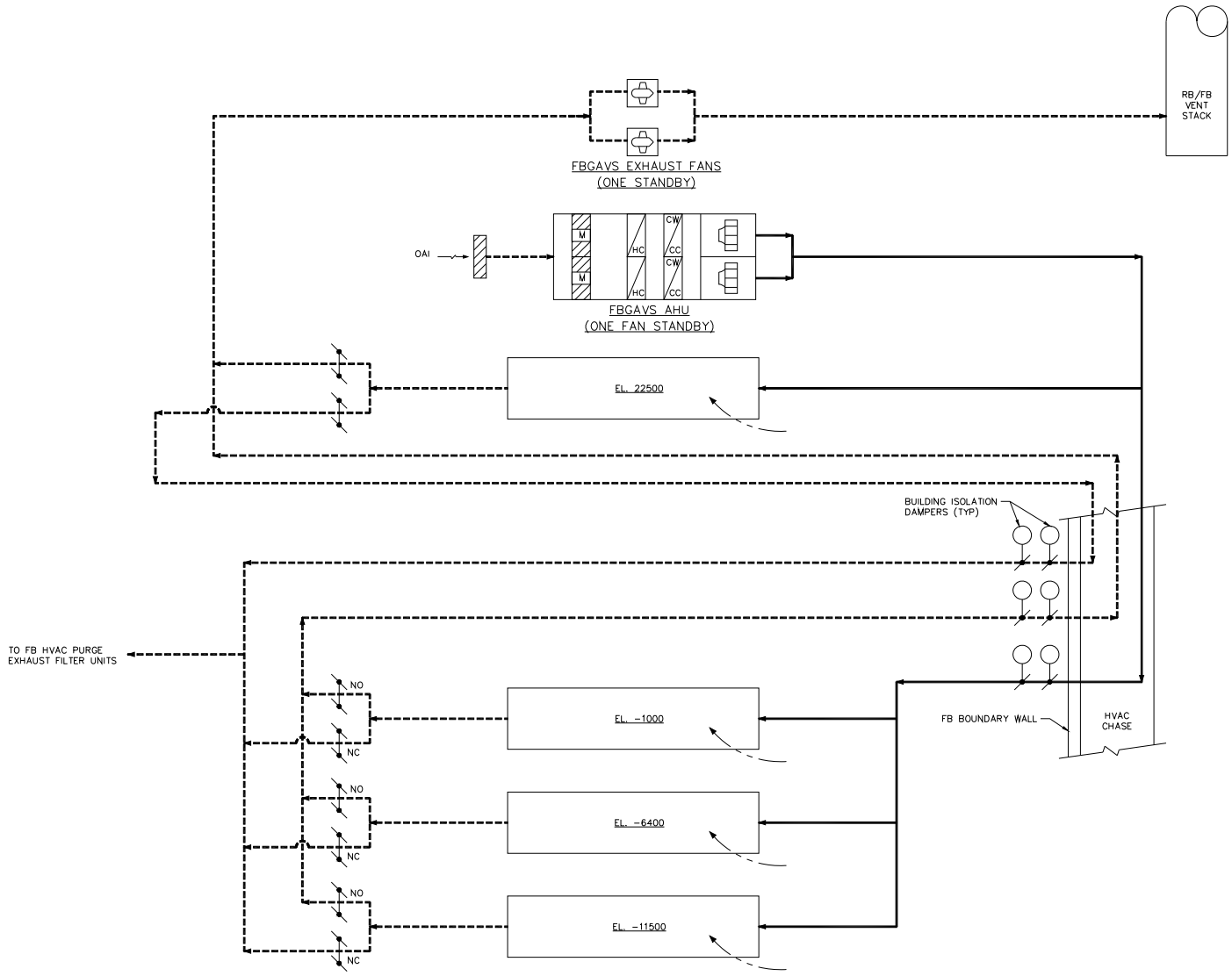

Figure 2.16.2-7. FBGAVS Functional Arrangement Diagram

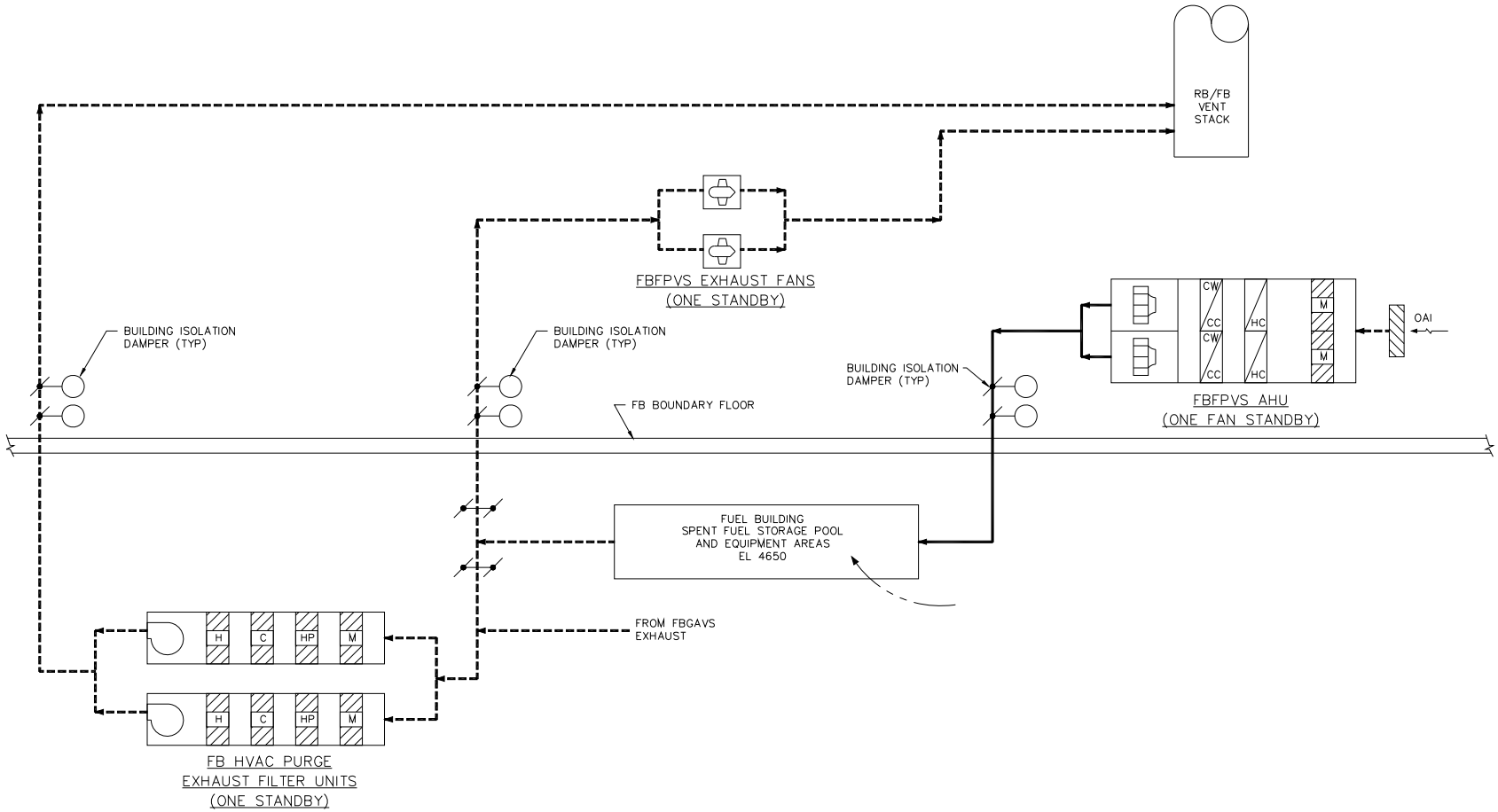

Figure 2.16.2-8. FBFPVS Functional Arrangement Diagram

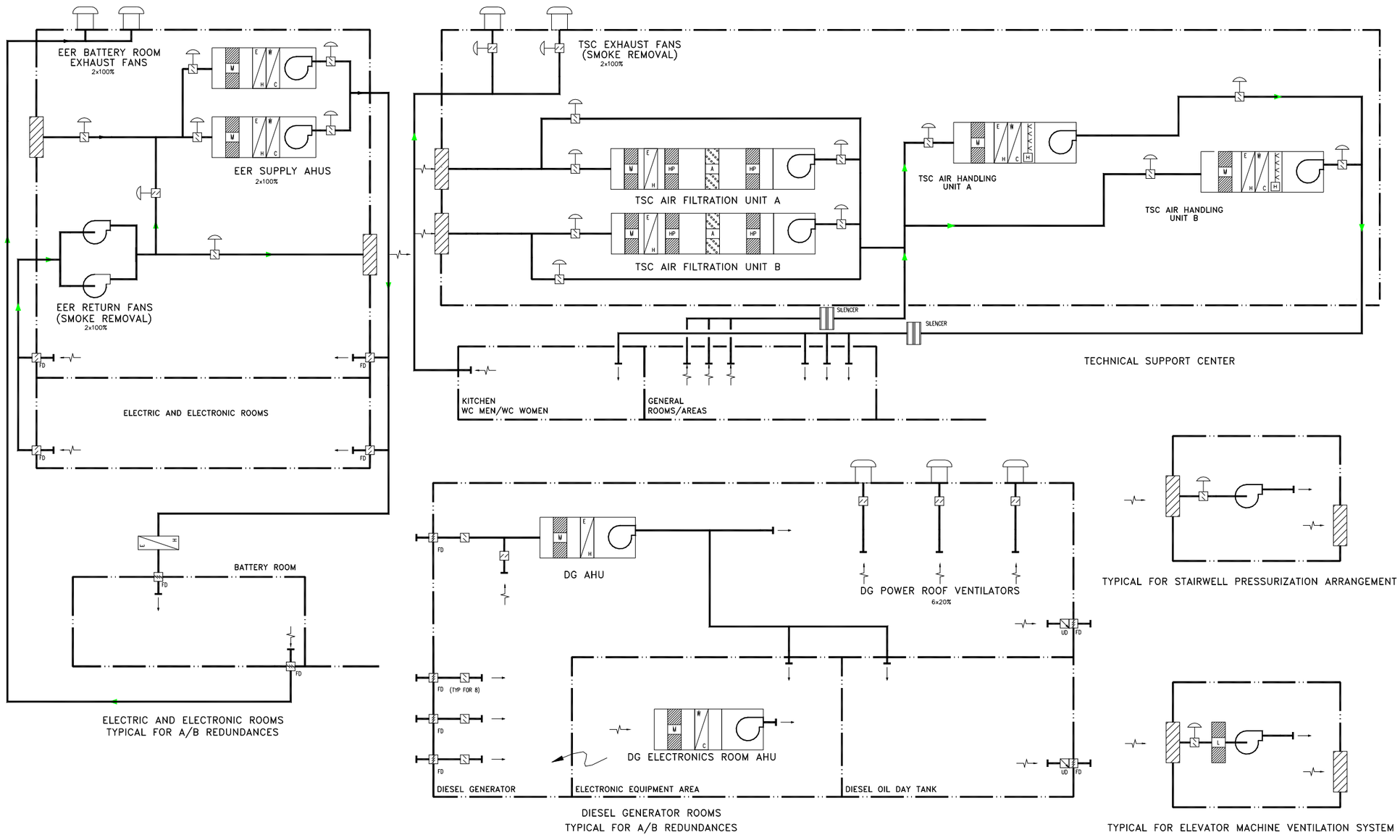

Figure 2.16.2-9. EBVS Functional Arrangement Diagram

2.16.3 Fire Protection System

Design Description

The Fire Protection System (FPS) is a nonsafety-related, integrated complex of components and equipment that detects and suppresses fires in the plant.

The FPS is a as shown in Figure 2.16.3-1 and the component locations of the FPS are as shown in Table 2.16.3-1

(1) The functional arrangement of the FPS is as described in the Design Description of this Section 2.16.3 and as shown in Figure 2.16.3-1.

(2) The FPS components and piping identified in Table 2.16.3-1 remain functional during and after an SSE.

(3) The FPS provides for manual fire suppression capability to plant areas containing safe shutdown equipment.

(4) The FPS provides two firewater storage sources.

   a. The Primary storage tanks contain the required combined minimum uasable fire water storage capacity.

   b. The designated site-specific Secondary firewater storage source contains thecombined minimum usable firewater storage capacity.

(5) Each fire pump provides the required minimum discharge flow with adequate pressure.

(6) Smoke detectors provide fire detection capability and can be used to initiate fire alarms in areas containing safety-related equipment.

(7) The FPS provides post 72-hour makeup to the IC/PCCS pools and Spent Fuel Pool.

   a. The primary diesel-driven fire pump is available to provide post-72 hour makeup to the IC/PCCS pools and Spent Fuel Pool.

   b. The fuel oil tank for the primary diesel-driven fire pump contains adequate fuel oil capacity to support the RTNSS function of providing make up water from 72 hours to 7 days after an accident.

(8) The minimum set of displays, alarms and controls, based on the applicable codes and standards, including HFE evaluations and emergency procedure guidelines, is available in the main control room.

Inspections, Tests, Analyses and Acceptance Criteria

Table 2.16.3-2 provides a definition of the inspections, test and/or analyses, together with associated acceptance criteria for the Fire Protection System.

Table 2.16.3-1

Fire Protection System Equipment

Principal Components	Location(s)	Seismic Category
Seismic Category I piping loop and valves including supports providing source of makeup water to IC/PCCS and fuel pools	OO	I
Primary Fire water storage tanks	OO	I
Fire pump enclosure	OO	I
Primary diesel-driven fire pump	OO	I
Primary diesel fire pump fuel tank	OO	I
Seismic Category II piping and valves including supports (includes balance of primary piping and valves)	OO, RB, CB, FB	II
Primary motor-driven fire pump and other primary pumps	OO	II

Location codes:

CB = Control Building
RB = Reactor Building
OO = Outdoors Onsite
FB = Fuel Building

Table 2.16.3-2

ITAAC For The Fire Protection System

Design Commitment	Inspections, Tests, Analyses	Acceptance Criteria
1. The functional arrangement of the FPS is as described in Subsection 2.16.3 and Figure 2.16.3-1.	Inspection of the as-built system will be conducted.	Inspection report(s) document that the as-built FPS conforms with the basic configuration contained in the Design Description of Subsection 2.16.3 and Figure 2.16.3-1.
2. The FPS components and piping identified in Table 2.16.3-1 remain functional during and after an SSE.	a. Analysis of the FPS components and piping identified in Table 2.16.3-1 will be performed to demonstrate that the components and piping will remain functional during and after an SSE. b. Inspection of the as-built FPS components and piping identified in Table 2.16.3-1 will be performed to verify that the components and piping are installed in accordance with the configurations specified by the analyses.	a. Analyses demonstrate that the FPS components and piping identified in Table 2.16.3-1 will remain functional during and after an SSE. b. Inspection report(s) document that the as-built components and piping identified in Table 2.16.3-1 are installed in accordance with the configurations specified by the analyses.
3. The FPS provides for manual fire suppression capability to plant areas containing safe shutdown equipment.	a. Inspection of the as-built manual fire suppression system outside the Containment not protected by a fixed fire suppression system will be performed to verify that any location that contains or could present a hazard to safe shutdown equipment can be reached by two e effective hose stream with a maximum of 30.5 meters (100 feet) of hose. b. Inspection of the as-built manual fire suppression system will be performed to	Inspection report(s) of the as-built manual fire suppression system document that: a. Standpipe and hose rack stations are located such that any safe shutdown equipment outside Containment not protected by a fixed fire suppression system can be reached by an effective hose stream (9.1 m [30 ft]) with a maximum of 30.5 m (100 ft) of hose from each of two hose stations on separate standpipes.

Table 2.16.3-2

ITAAC For The Fire Protection System

Design Commitment	Inspections, Tests, Analyses	Acceptance Criteria
	verify that any location outside Containment protected by a fixed fire suppression system that contains or could present a hazard to safe shutdown equipment can be reached by at least one hose stream with a maximum of 30.5 meters (100 feet) of hose. c. Inspection of the as-built manual fire suppression system will be performed to verify that any location within Containment can be reached by two effective hose streams with a maximum of 61 meters (200 feet) of hose.	b. Standpipe and hose rack stations are located such that any safe shutdown equipment outside Containment protected by a fixed fire suppression system can be reached by an effective hose stream (9.1 m [30 ft]) with a maximum of 30.5 m (100 ft) of hose from at least one hose station. c. Standpipe and hose rack stations are located such that any location within Containment can be reached by an effective hose stream (9.1 m [30 ft]) with a maximum of 61 m (200 ft) of hose from each of two hose stations on separate standpipes.

Table 2.16.3-2

ITAAC For The Fire Protection System

Design Commitment	Inspections, Tests, Analyses	Acceptance Criteria
4. The FPS provides two firewater storage sources.	Inspection of the as-built water supply sources and volumetric calculations using as-built dimensions will be performed.	Inspection report(s) document that the as-built water supply sources meet the volumetric requirements specified in the Certified Design Commitment.
a. The Primary storage tanks contain the required combined minimum usable fire water storage capacity.		a. Inspection report(s) document that the as-built water supply sources meet the volumetric requirements of a combined minimum usable firewater storage capacity of ≥3900 m^3 (1,030,000 gallons) as specified in the Certified Design Commitment.
b. The designated site-specific Secondary firewater storage source contains the combined minimum usable firewater storage capacity.	Inspection of the as-built water supply sources and volumetric calculations using as-built dimensions will be performed.	b. Inspection report(s) document that the as-built water supply sources meet the volumetric requirements of ≥2082 m^3 (550,000) gallons specified in the Certified Design Commitment

Table 2.16.3-2

ITAAC For The Fire Protection System

Design Commitment	Inspections, Tests, Analyses	Acceptance Criteria
5. Each fire pump provides the required minimum discharge flow with adequate pressure.	i) Testing and/or analysis of each fire pump will be performed to demonstrate that each fire pump provides a flow rate of at least 484 m^3/hr (2130 gpm). ii) Testing will be performed to demonstrate rated flow and rated water pressure at the most hydraulically remote standpipes in the Turbine Building and the Reactor Building.	i) Test report(s) and/or analysis demonstrate that each fire pump provides a flow rate of at least 484 m^3/hr (2130 gpm). ii) Test reports document acceptable flow and rated pressure at the most hydraulically remote Turbine Building and Reactor standpipe - a.) 40 mm (1.5 inch) hoses; total flow of 22.7 m^3/hr (100 gpm) at a minimum pressure of 448.2 kPaG (65 psig) and b.) 65 mm (2.5 inch) hoses; total flow of 113.5 m^3/hr (500 gpm) at a minimum pressure of 689 kPaG (100 psig).
6. Smoke detectors provide fire detection capability and can be used to initiate fire alarms in areas containing safety-related equipment.	Testing will be performed on the as-built individual fire detectors in areas containing safety-related equipment by providing a simulated fire condition.	Test report(s) document that the as-built individual smoke detectors respond to simulated fire conditions and initiate fire alarms in area containing safety-related equipment.
7. The FPS provides post 72-hour makeup to the IC/PCCS pools and Spent Fuel Pool. a. The primary diesel-driven fire pump is available to provide post-72 hour makeup to the IC/PCCS pools and Spent Fuel Pool.	a. Test will be performed to demonstrate that the primary diesel-driven fire pump starts on a manual signal and supplies a minimum of 45.4 m^3/hr (≥200 gpm) make up water to the IC/PCCS pool and the Spent Fuel Pool.	a. Test report(s) document that the primary diesel-driven fire pump starts on a manual signal and supplies a minimum of 45.4 m^3/hr (≥200 gpm) make-up water to the IC/PCCS pools and Spent Fuel Pool.

Table 2.16.3-2

ITAAC For The Fire Protection System

Design Commitment	Inspections, Tests, Analyses	Acceptance Criteria
b. The fuel oil tank for the primary diesel-driven fire pump contains adequate fuel oil capacity to support the RTNSS function of providing make up water from 72 hours to 7 days after an accident	b. The as-built primary diesel-driven fire pump fuel oil tank capacity will be calculated.	b. Test report documents that the as-built fuel oil tanks for the diesel-driven fire pumps have greater than a 3.79 m^3 (1000 gallon) capacity to support the RTNSS function of providing make up water from 72 hours to 7 days after an accidentbefore refilling based upon the as built fuel tanks and fuel consumption rates and margin criteria provided in NFPA 24.
8. The minimum set of displays, alarms and controls, based on the applicable codes and standards, including HFE evaluations and emergency procedure guidelines, is available in the main control room.	See Section 3.3.	See Section 3.3.

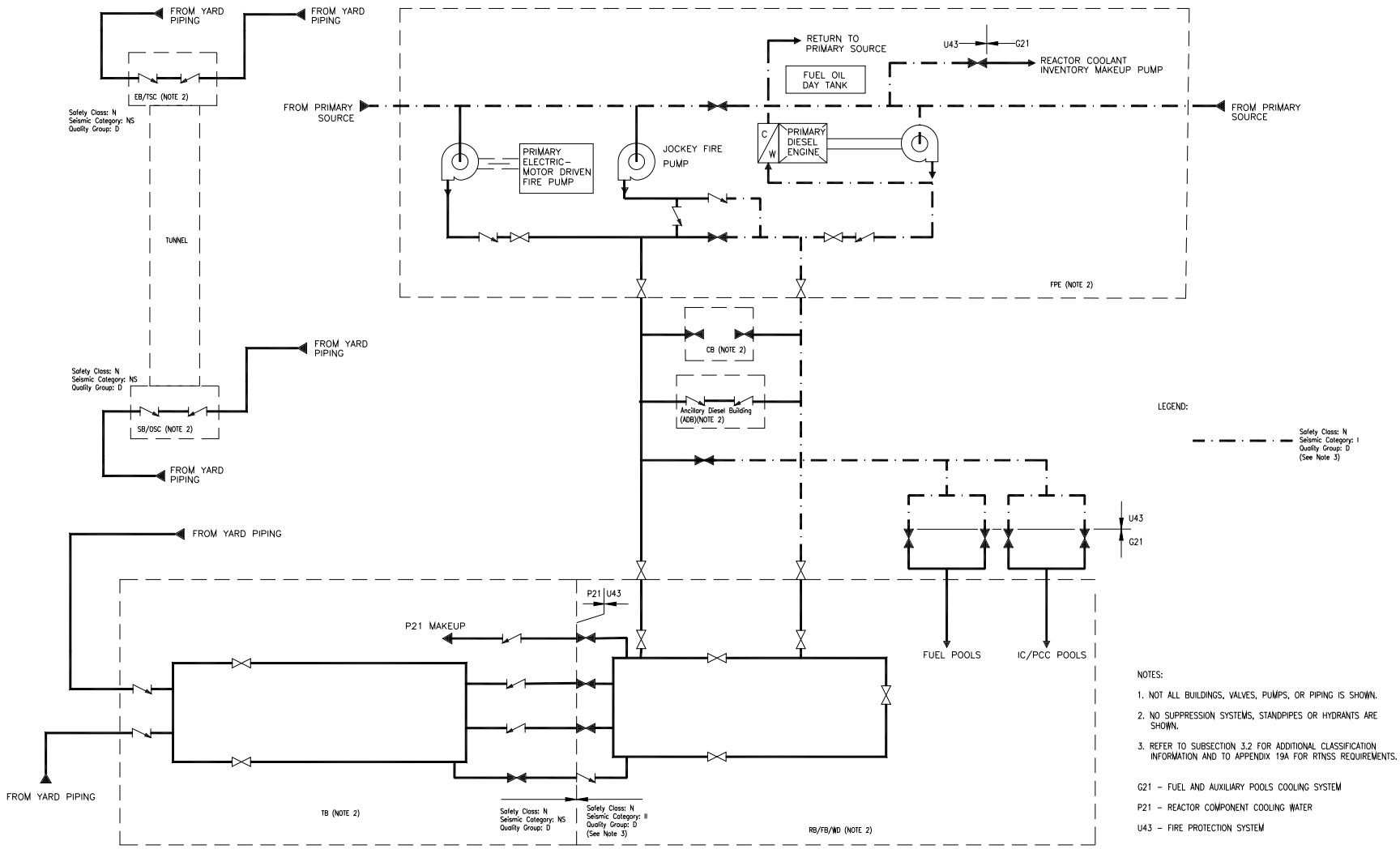

Figure 2.16.3-1. Fire Protection System

2.16.3.1 Fire Barriers

Design Description

A Fire Barrier is a continuous vertical or horizontal fire-resistance rated construction assembly designed and constructed to limit the spread of heat and fire and to restrict the movement of smoke. Fire dampers protect ventilation duct openings in fire barriers.

(1) Fire barriers of 3-hour fire resistance rating are provided that separate:

- Safety-related systems from any potential fires in nonsafety-related areas that could affect the ability of safety-related systems to perform their safety function.
- Redundant divisions or trains of safety-related systems from each other to prevent damage that could adversely affect a safe shutdown function from a single fire.
- Components within a single safety-related electrical division that present a fire hazard to components in another safety-related division.
- Electrical circuits (safety-related and nonsafety-related) whose fire-induced failure could cause a spurious actuation that could adversely affect a safe shutdown function.

(2) Penetrations through fire barriers are sealed or closed to provide fire resistance ratings at least equal to that of the barriers.

(3) Fire dampers protect ventilation duct openings in fire barriers.

(4) Exposed structural steel protecting areas containing safe shutdown equipment is fireproofed with material with a fire rating of up to 3 hours as determined from the FHA.

Inspections, Tests, Analyses and Acceptance Criteria

Table 2.16.3.1-1 provides a definition of the inspections, test and/or analyses, together with associated acceptance criteria for the Fire Barriers.

Table 2.16.3.1-1

ITAAC For Fire Barriers

Design Commitment	Inspections, Tests, Analyses	Acceptance Criteria
1. 3-hour fire barriers shall be installed in all locations listed in Subsection 2.16.3.1.	Inspections will assure 3-hour fire barriers are installed.	All locations listed in Subsection 2.16.3.1 are protected by 3-hour fire barriers.
2. Penetrations through fire barriers are sealed or closed to provide fire resistance ratings at least equal to that of the barriers.	Inspections will confirm that as-built penetrations through fire barriers are sealed or closed to provide fire resistance ratings at least equal to that required of the barriers.	Inspection report(s) document that as-built penetrations through fire barriers provide fire resistance ratings at least equal to that required of the barriers.
3. Fire dampers protect ventilation duct openings in fire barriers.	Inspections will be performed to confirm the presence of fire dampers in ventilation duct openings.	Inspection report(s) document the presence of fire dampers in ventilation duct openings, consistent with the fire areas identified in Table 2.16.3.1-1.
4. Exposed structural steel protecting areas containing safe shutdown equipment is fireproofed with material with a fire rating of up to 3 hours as determined from the FHA.	Inspections will be performed to confirm the presence of fireproofing on structural steel protecting safe shutdown related areas.	Inspection report(s) document the presence of fireproofing on structural steel protecting areas containing safe shutdown equipment with material with a fire rating of up to 3 hours as determined from the FHA.

2.16.4 Equipment and Floor Drain System

Design Description

The Equipment and Floor Drain System (EFDS) collects waste liquids from their point of origin and transfers them to a suitable processing or disposal system. The Reactor Coolant Pressure Boundary (RCPB) leakage detection systems utilize features of the EFDS to provide a means of detecting and, to the extent practical, identifying the source of the reactor coolant leakage.

The detection of small, unidentified leakage within the DW is accomplished by monitoring the DW floor drain high conductivity waste (HCW) sump pump activity and the DW sump level changes.

The detection of small, identified leakage within the DW is accomplished by monitoring the DW equipment drain low conductivity waste (LCW) sump pump activity and sump level increases.

(1) The functional arrangement of the EFDS is as described in this Section 2.16.4.

(2) The EFDS collects liquid wastes from floor drainage in the DW and directs these wastes to the DW floor drain high conductivity waste (HCW) sump.

(3) The EFDS collects liquid wastes emanating from equipment in the DW and directs these wastes to the DW equipment drain low conductivity waste (LCW) sump.

(4) The containment isolation portion of the EFDS is addressed in Tier 1, Subsection 2.15.1.

Inspections, Tests, Analyses and Acceptance Criteria

Table 2.16.4-1 provides a definition of the inspections, test and/or analyses, together with associated acceptance criteria for the Equipment and Floor Drain System.

Table 2.16.4-1

ITAAC For The Equipment and Floor Drain System

Design Commitment	Inspections, Tests, Analyses	Acceptance Criteria
1. The functional arrangement of the EFDS is as described in Section 2.16.4.	Inspections of the as-built EFDS will be performed.	Inspection report(s) document that the as-built EFDS conforms with the description in Subsection 2.16.4.
2. The EFDS collects liquid wastes from floor drainage in the DW and directs these wastes to the DW floor drain high conductivity waste (HCW) sump.	A test will be performed by pouring water into the floor drains in the DW inside the containment boundary.	Test report(s) demonstrate that the water poured into these drains is collected in the DW floor drain high conductivity waste (HCW) sump.
3. The EFDS collects liquid wastes emanating from equipment in the DW and directs these wastes to the DW equipment drain low conductivity waste (LCW) sump.	A test will be performed by pouring water into equipment leak-off lines in the DW inside the containment boundary.	Test report(s) demonstrate that the water poured into these leak-off lines is collected in the DW equipment drain low conductivity waste (LCW) sump.
4. The containment isolation portion of the EFDS is addressed in Tier 1, Subsection 2.15.1.	See Tier 1, Subsection 2.15.1.	See Tier 1, Subsection 2.15.1.

2.16.5 Reactor Building

Design Description

The Reactor Building (RB) houses the reactor system, reactor support and safety systems, concrete containment, essential power supplies and equipment, steam tunnel, and refueling area. On the upper floor of the RB are the new fuel pool and small spent fuel storage area, dryer/separator storage pool, refueling and fuel handling systems, the upper connection to the Inclined Fuel Transfer System and the overhead crane. The Isolation Condenser/Passive Containment Cooling System pools are below the refueling floor.

The RB structure is integrated with a reinforced concrete containment vessel (RCCV); the RCCV is located on a common basemat with the RB. The RB is a rigid box type shear wall building. The external walls form a box surrounding a large cylindrical containment. The RB shares a common wall and sits on a large common basemat with the Fuel Building. The RB is a safety-related, Seismic Category I structure. The building is partially embedded.

The key characteristics of the RB are as follows:

(1) The RB is designed and constructed to accommodate the dynamic, static and thermal loading conditions associated with the various loads and load combinations, which form the structural design basis. The loads are (as applicable) those associated with:

- Natural phenomena—wind, floods, tornados (including tornado missiles), earthquakes, rain and snow.
- Internal events—floods, pipe breaks including LOCA and missiles.
- Normal plant operation—live loads, dead loads, temperature effects and building vibration loads.

(2) The functional arrangement of the RB is as described in the Design Description of this Subsection 2.16.5 and is as shown in Figures 2.16.5-1 through 2.16.5-11.

(3) The critical dimensions used for seismic analyses and the acceptable tolerances are provided in Table 2.16.5-1.

(4) The RB design provides a holdup volume and delays release of radioactivity to the environment consistent with the LOCA dose analysis maximum exfiltration assumptions.

(5) The RB provides three-hour fire barriers for separation of the four independent safe shutdown divisions.

(6) The RB is protected against external and internal floods. In regards to external flooding, the RB incorporates structural provisions into the plant design to protect the structures, systems and components from postulated flood and groundwater conditions. This approach provides:

a. Wall thicknesses below flood level designed to withstand hydrostatic loads;

b. Water stops provided in all expansion and construction joints below flood and groundwater levels;

c. Waterproofing of below flood and groundwater levels external surfaces;

d. Water seals in external walls at pipe penetrations below flood and groundwater levels; and

e. Roofs designed to prevent pooling of large amounts of water in excess of the structural capacity of the roof for design loads.

(7) Protective features used to mitigate or eliminate the consequences of internal flooding are:

a. Structural enclosures or barriers;

b. Curbs and sills;

c. Leakage detection components; and

d. Drainage systems.

(8) The internal flooding protection features prevent flood water in one division from propagating to other division(s) and ensure equipment necessary for safe shutdown is located above the maximum flood level for that location or is qualified for flood conditions by:

a. Divisional walls

b. Sills

c. Watertight doors.

(9) The RB is protected against pressurization effects associated with postulated rupture of pipes containing high-energy fluid that occur in subcompartments of the RB.

(10) The Reactor Building minimum passive mixing volume meets design assumptions for the mixing of fission products following a LOCA.

Inspections, Tests, Analyses and Acceptance Criteria

Table 2.16.5-2 provides a definition of the inspections, tests and/or analyses, together with associated acceptance criteria for the RB.

Table 2.16.5-1

Critical Dimensions of Reactor Building – Part 1

Label	Wall or Section Description	Column Line or Region	Floor Elevation or Elevation Range (EL: mm)	Concrete Thickness (mm)	Tolerance (mm)
	Concrete Containment				
101	RPV Pedestal Cylinder	Not Applicable	From -10400 to 4650	2500	+60/-0
102	RCCV Cylinder	Not Applicable	From 4650 to 24600	2000	+60/-0
103	Containment Basemat	Below RPV Pedestal Cylinder	-10400	5100	+50/-20
104	Suppression Pool Slab	Between RPV Pedestal Cylinder and RCCV Cylinder	4650	2000	+60/-0
105	Top Slab	From DW Head to RCCV Cylinder	27000	2400	+60/-0
	Outside Concrete Containment				
1	Wall at Column Line R1	From RA to RG	From -11500 to 3650	2000	+25/-20
2	Wall at Column Line R7	From RA to RG	From -11500 to 3650	2000	+25/-20
3	Wall at Column Line RA	From R1 to R7	From -11500 to 3650	2000	+25/-20
4	Wall at Column Line RG	From R1 to R7	From -11500 to 3650	2000	+25/-20
5	Wall between Column Lines R1 and R2	From between RA and RB to RC	From -11500 to -7400	1000	+25/-20
6	Wall between Column Lines R1 and R2	From RE to between RF and RG	From -11500 to -7400	1000	+25/-20
7	Wall between Column Lines RA and RB	From between R1 and R2 to R3	From -11500 to -7400	1000	+25/-20
8	Wall between Column Lines RF and RG	From between R1 and R2 to R3	From -11500 to -7400	1000	+25/-20
9	Cylinder below RCCV	Not Applicable	From -11500 to 2650	2000	+60/-0
10	Cylinder between RPV Pedestal and Cylinder below RCCV	Northeast Quadrant	From -11500 to -1700	Varies, Minimum 1400	N/A
11	Cylinder between RPV Pedestal and Cylinder below RCCV	Northwest Quadrant	From -11500 to -1700	Varies, Minimum 1400	N/A
12	Cylinder between RPV Pedestal and Cylinder below RCCV	Southwest Quadrant	From -11500 to -1700	Varies, Minimum 600	N/A
13	Cylinder between RPV Pedestal and Cylinder below RCCV	Southeast Quadrant	From -11500 to -7400	Varies, Minimum 600	N/A
14	Cylinder between RPV Pedestal and Cylinder below RCCV	Southeast Quadrant	From -6400 to -1900	Varies, Minimum 1350	N/A

Table 2.16.5-1

Critical Dimensions of Reactor Building – Part 1

Label	Wall or Section Description	Column Line or Region	Floor Elevation or Elevation Range (EL: mm)	Concrete Thickness (mm)	Tolerance (mm)
15	Wall at Column Line R1	From RA to RG	From 4650 to 16500	1500	+25/-20
16	Wall at Column Line R7	From RA to RG	From 4650 to 16500	1500	+25/-20
17	Wall at Column Line RA	From R1 to R7	From 4650 to 26000	1500	+25/-20
18	Wall at Column Line RG	From R1 to R7	From 4650 to 26000	1500	+25/-20
19	Wall at Column Line R1	From RA to RC	From 17500 to 26000	1500	+25/-20
20	Wall at Column Line R1	From RE to RG	From 17500 to 26000	1500	+25/-20
21	Wall at Column Line R7	From RA to RC	From 17500 to 26000	1500	+25/-20
22	Wall at Column Line R7	From between RD and RE to RG	From 17500 to 26000	1500	+25/-20
23	Main Steam Tunnel Wall	East side	From 17500 to 24600	1300	+25/-20
24	Main Steam Tunnel Wall	West side	From 17500 to 24600	1300	+25/-20
25	Wall at Column Line R1	From RA to RB	From 27000 to 33000	1000	+25/-20
26	Wall at Column Line R1	From RB to RC	From 27000 to 33000	1500	+25/-20
27	Wall at Column Line R1	From RC to RE	From 27000 to 34000	3500	+25/-20
28	Wall at Column Line R1	From RE to RF	From 27000 to 33000	1500	+25/-20
29	Wall at Column Line R1	From RF to RG	From 27000 to 33000	1000	+25/-20
30	Wall at Column Line R2	From RA to RC	From 27000 to 33000	1000	+25/-20
31	Wall at Column Line R2	From RE to RG	From 27000 to 33000	1000	+25/-20
32	Wall at Column Line R6	From RA to RC	From 27000 to 33000	1000	+25/-20
33	Wall at Column Line R6	From RE to RG	From 27000 to 33000	1000	+25/-20
34	Wall at Column Line R7	From RA to RB	From 27000 to 33000	1000	+25/-20
35	Wall at Column Line R7	From RB to between RC and RD	From 27000 to 33000	1500	+25/-20
36	Wall at Column Line R7	From between RC and RD to RE	From 27000 to 34000	2440	+25/-20
37	Wall at Column Line R7	From RE to RF	From 27000 to 33000	1500	+25/-20

Table 2.16.5-1

Critical Dimensions of Reactor Building – Part 1

Label	Wall or Section Description	Column Line or Region	Floor Elevation or Elevation Range (EL: mm)	Concrete Thickness (mm)	Tolerance (mm)
38	Wall at Column Line R7	From RF to RG	From 27000 to 33000	1000	+25/-20
39	Wall at Column Line RA	From R1 to R7	From 27000 to 33000	1000	+25/-20
40	Wall at Column Line RB	From R1 to R7	From 27000 to 33000	2000	+25/-20
41	Wall between Column Lines RB and RC	From R6 to R7	From 27000 to 33000	1000	+25/-20
42	Wall at Column Line RC (Pool Girder)	From R1 to R7	From 27000 to 33000	1600	+25/-20
43	Wall at Column Line RE (Pool Girder)	From R1 to R7	From 27000 to 33000	1600	+25/-20
44	Wall between Column Lines RE and RF	From R6 to R7	From 27000 to 33000	1000	+25/-20
45	Wall at Column Line RF	From R1 to R7	From 27000 to 33000	2000	+25/-20
46	Wall at Column Line RG	From R1 to R7	From 27000 to 33000	1000	+25/-20
47	Reactor Cavity Wall (Northeast side)	From RC to between RC and RD	From 27000 to 34000	1300	+25/-20
48	Reactor Cavity Wall (Northwest side)	From between RD and RE to RE	From 27000 to 34000	1300	+25/-20
49	Reactor Cavity Wall (Southeast side)	From RC to between RC and RD	From 27000 to 34000	1300	+25/-20
50	Not used				
51	IC/PCCS Pool Wall between Column Lines R2 and R3	From between RB and RC to RC	From 27000 to 33000	1000	+25/-20
52	IC/PCCS Pool Wall between Column Lines R2 and R3	From RE to between RE and RF	From 27000 to 33000	1000	+25/-20
53	IC/PCCS Pool Wall at Column Line R3	From between RB and RC to RC	From 27000 to 33000	400	+15/-10
54	IC/PCCS Pool Wall at Column Line R3	From RE to between RE and RF	From 27000 to 33000	400	+15/-10
55	IC/PCCS Pool Wall between Column Lines R3 and R4	From between RB and RC to RC	From 27000 to 33000	400	+15/-10
56	IC/PCCS Pool Wall between Column Lines R3 and R4	From RE to between RE and RF	From 27000 to 33000	400	+15/-10
57	IC/PCCS Pool Wall between Column Lines R4 and R5	From between RB and RC to RC	From 27000 to 33000	400	+15/-10
58	IC/PCCS Pool Wall between Column Lines R4 and R5	From RE to between RE and RF	From 27000 to 33000	400	+15/-10
59	IC/PCCS Pool Wall at Column Line R5	From between RB and RC to RC	From 27000 to 33000	400	+15/-10
60	IC/PCCS Pool Wall at Column Line R5	From RE to between RE and RF	From 27000 to 33000	400	+15/-10

Table 2.16.5-1

Critical Dimensions of Reactor Building – Part 1

Label	Wall or Section Description	Column Line or Region	Floor Elevation or Elevation Range (EL: mm)	Concrete Thickness (mm)	Tolerance (mm)
61	IC/PCCS Pool Wall between Column Lines R5 and R6	From between RB and RC to RC	From 27000 to 33000	470	+15/-10
62	IC/PCCS Pool Wall between Column Lines R5 and R6	From RE to between RE and RF	From 27000 to 33000	470	+15/-10
63	IC/PCCS Pool Wall between Column Lines RB and RC	From between R2 and R3 to between R5 and R6	From 27000 to 33000	600	+15/-10
64	IC/PCCS Pool Wall at Column Line RC	From R2 to between R2 and R3	From 27000 to 33000	1000	+25/-20
65	IC/PCCS Pool Wall at Column Line RE	From R2 to between R2 and R3	From 27000 to 33000	1000	+25/-20
66	IC/PCCS Pool Wall between Column Lines RE and RF	From between R2 and R3 to between R5 and R6	From 27000 to 33000	600	+15/-10
67	Wall at Column Line R1	From RB to RF	From 34000 to 52000	1000	+25/-20
68	Wall at Column Line R7	From RB to RF	From 34000 to 52000	1000	+25/-20
69	Wall at Column Line RB	From R1 to R7	From 34000 to 52000	1000	+25/-20
70	Wall at Column Line RF	From R1 to R7	From 34000 to 52000	1000	+25/-20
71	Basemat excluding Containment Basemat	From R1 to R7 and RA and RG	-11500	4000	+50/-20
72	Floor inside Cylinder below RCCV	Northeast Quadrant	-6400	600	+15/-10
73	Floor inside Cylinder below RCCV	Northwest Quadrant	-6400	600	+15/-10
74	Floor inside Cylinder below RCCV	Southeast Quadrant	-6400	1000	+25/-20
75	Floor inside Cylinder below RCCV	Southwest Quadrant	-6400	600	+15/-10
76	Floor outside Cylinder below RCCV	From R1 to R7 and RA and RG	-6400	1000	+25/-20
77	Floor inside Cylinder below RCCV	Northeast Quadrant	-1000	700	+15/-10
78	Floor inside Cylinder below RCCV	Northwest Quadrant	-1000	700	+15/-10
79	Floor inside Cylinder below RCCV	Southeast Quadrant	-1000	900	+15/-10
80	Floor inside Cylinder below RCCV	Southwest Quadrant	-1000	700	+15/-10
81	Floor outside Cylinder below RCCV	From R1 to R7 and RA to RG	-1000	1000	+25/-20

Table 2.16.5-1

Critical Dimensions of Reactor Building – Part 1

Label	Wall or Section Description	Column Line or Region	Floor Elevation or Elevation Range (EL: mm)	Concrete Thickness (mm)	Tolerance (mm)
82	Floor	From R1 to R7 and RA to RG	4650	1000	+25/-20
83	Floor	From R1 to R7 and RA to RG	9060	1000	+25/-20
84	Floor	From R1 to R7 and RA to RG	13570	1000	+25/-20
85	Main Steam Tunnel Floor	From RC to RE	17500	1600	+25/-20
86	Floor excluding Main Steam Tunnel Floor	From R1 to R7 and RA to RG	17500	1000	+25/-20
87	Main Steam Tunnel Roof	From RC to RE	27000	2400	+25/-20
88	Floor	From R1 to R7 and RA to RC	27000	1000	+25/-20
89	Floor	From R1 to R7 and RE to RG	27000	1000	+25/-20
90	Floor	From R1 to R7 and RA to RC	34000	1000	+25/-20
91	Floor	From R1 to R7 and RE to RG	34000	1000	+25/-20
92	Roof	From R1 to R7 and RB to RF	52700	700	+15/-10

Table 2.16.5-1

Critical Dimensions of Reactor Building – Part 2

Key Dimension	Reference Dimension	Nominal Dimension (mm)	Tolerance (mm)
Distance from RPV Centreline to Outside Surface of Wall at Column Line RA when Measured at Column Line R1	X1 (Figure 2.16.5-1)	24500	+/-300
Distance from RPV Centreline to Outside Surface of Wall at Column Line RG when Measured at Column Line R1	X2 (Figure 2.16.5-1)	24500	+/-300
Distance from RPV Centreline to Outside Surface of Wall at Column Line R1 when Measured at Column Line RA	X3 (Figure 2.16.5-1)	24500	+/-300
Distance from RPV Centreline to Outside Surface of Wall at Column Line R7 when Measured at Column Line RA	X4 (Figure 2.16.5-1)	24500	+/-300
Distance from Top of Basemat Outside Containment to Design Plant Grade	X5 (Figure 2.16.5-10)	16150	+/-300
Deleted			
Distance from Design Plant Grade to Top Surface of Roof	X6 (Figure 2.16.5-10)	48050	+/-300

Table 2.16.5-2

ITAAC For The Reactor Building

Design Commitment	Inspections, Tests, Analyses	Acceptance Criteria
1. The RB is designed and constructed to accommodate the dynamic and static loading conditions associated with the various loads and load combinations, which form the structural design basis. The loads are (as applicable) those associated with: • Natural phenomena—wind, floods, tornados (including tornado missiles), earthquakes, rain and snow. • Internal events—floods, pipe breaks including LOCA and missiles. • Normal plant operation—live loads, dead loads, temperature effects and building vibration loads.	Analyses of the as-built RB will be conducted.	Report(s) document that the as-built RB conforms to the structural design basis loads specified in the Design Description of this subsection 2.16.5 associated with: • Natural phenomena—wind, floods, tornados (including tornado missiles), earthquakes, rain and snow. • Internal events—floods, pipe breaks including LOCA and missiles. • Normal plant operation—live loads, dead loads, temperature effects and building vibration loads.
2. The functional arrangement of the RB is as described in the Design Description of this Subsection 2.16.5 and is as shown in Figures 2.16.5-1 through 2.16.5-11.	Inspections of the as-built RB will be conducted.	Report(s) document that the RB conforms to the functional arrangement described in the Design Description of this Subsection 2.16.5 and is as shown in Figures 2.16.5-1 through 2.16.5-11.

Table 2.16.5-2

ITAAC For The Reactor Building

Design Commitment	Inspections, Tests, Analyses	Acceptance Criteria
3. The critical dimensions and acceptable tolerances for the RB are as described in Table 2.16.5-1.	Inspection of the RB will be performed. Deviations from the design conditions will be analyzed using the design basis loads.	Report(s) exist which reconcile construction deviations from the critical dimensions and tolerances specified in Table 2.16.5-1 and conclude that the as-built RB will withstand the design basis loads specified in the Design Description of this subsection 2.16.5 without loss of structural integrity or the safety-related functions.
4. The RB design provides a holdup volume and delays release of radioactivity to the environment consistent with the LOCA dose analysis maximum exfiltration. assumptions .	Leakage rate testing of the as-built RB under a differential pressure of 62.3 Pa (0.25” w.g.) will be conducted.	Test and analysis report(s) document that the RB leakage rate under the conditions expected to exist during a LOCA is ≤ 141.6 l/s (300 cfm).
5. The RB provides three-hour fire barriers for separation of the four independent safe shutdown divisions.	Inspections of the as-built RB will be conducted.	Inspection report(s) document that each division is separated by fire barriers having ≥ 3-hour fire ratings.

Table 2.16.5-2

ITAAC For The Reactor Building

Design Commitment	Inspections, Tests, Analyses	Acceptance Criteria
6. For external flooding, the RB incorporates structural provisions into the plant design to protect the structures, systems and components from postulated flood and groundwater conditions. This approach provides: a. Wall thicknesses below flood level designed to withstand hydrostatic loads; b. Water stops provided in all expansion and construction joints below flood and groundwater levels; c. Waterproofing of below flood and groundwater levels external surfaces; d. Water seals in external walls at pipe penetrations below flood and groundwater levels; and e. Roofs designed to prevent pooling of large amounts of water in excess of the structural capacity of the roof for design loads.	Inspection of the as-built flood control features will be conducted.	Inspection report(s) document that the as-built RB conforms with the following flood protection features specified in the Design Description of this subsection 2.16.5. a. Wall thicknesses below flood level are designed to withstand hydrostatic loads; b. Water stops are provided in all expansion and construction joints below flood and groundwater levels; c. Waterproofing exists below flood and groundwater levels external surfaces; d. Water seals exist in external walls at pipe penetrations below flood and groundwater levels; and e. Roofs are built to prevent pooling of large amounts of water in excess of the structural capacity of the roof for design loads.

Table 2.16.5-2

ITAAC For The Reactor Building

Design Commitment	Inspections, Tests, Analyses	Acceptance Criteria
7. Protective features used to mitigate or eliminate the consequences of internal flooding are: a. Structural enclosures or barriers; b. Curbs and sills; c. Leakage detection components; and d. Drainage systems	Inspections of the as-built RB flood protection features will be conducted.	Reports document that the following flood protection features specified in the Design Description 2.16.5 are in place in the as-built RB to mitigate or eliminate the consequences of internal flooding: a. Structural enclosures or barriers; b. Curbs and sills; c. Leakage detection components; and d. Drainage systems
8. The internal flooding protection features prevent flood water in one division from propagating to other division(s) and ensure equipment necessary for safe shutdown is located above the maximum flood level for that location or is qualified for flood conditions by: a. Divisional walls b. Sills c. Watertight doors.	Inspections of the as built RB flood protection features will be conducted.	Reports document that the following flood protection features specified in the Design Description 2.16.5 are in place in the as-built RB to prevent flood water in one division from propagating to other division(s) and to ensure equipment necessary for safe shutdown not located above the maximum flood level for that location is qualified for flood conditions: a. Divisional walls b. Sills c. Watertight doors.

Table 2.16.5-2

ITAAC For The Reactor Building

Design Commitment	Inspections, Tests, Analyses	Acceptance Criteria
9. The RB is protected against pressurization effects associated with postulated rupture of pipes containing high-energy fluid that occur in subcompartments of the RB.	Inspections of the RB subcompartments that rely on overpressure protection devices will be conducted.	Reports document that as-built RB subcompartments which rely on overpressure protection devices are equipped with over pressure protection devices specified in the Design Description 2.16.5.
10. The Reactor Building minimum passive mixing volume meets design assumptions for the mixing of fission products following a LOCA.	Inspections of the as-built dimensions of the areas in the RB credited in the design basis mixing analysis will be performed. The results will be compared to the calculation of the total mixing volume to verify that the results match the assumptions.	A report documents that the as-built RB ensures a passive mixing volume.

Figure 2.16.5-1. RB Concrete Outline Plan at EL –11500

{{{Security-Related Information – Withheld Under 10 CFR 2.390}}}

Figure 2.16.5-2. RB Concrete Outline Plan at EL –6400

{{{Security-Related Information – Withheld Under 10 CFR 2.390}}}

Figure 2.16.5-3. RB Concrete Outline Plan at EL –1000

{{{Security-Related Information – Withheld Under 10 CFR 2.390}}}

Figure 2.16.5-4. RB Concrete Outline Plan at EL 4650

{{{Security-Related Information – Withheld Under 10 CFR 2.390}}}

Figure 2.16.5-5. RB Concrete Outline Plan at EL 9060
{{{Security-Related Information – Withheld Under 10 CFR 2.390}}}

Figure 2.16.5-6. RB Concrete Outline Plan at EL 13570

{{{Security-Related Information – Withheld Under 10 CFR 2.390}}}

Figure 2.16.5-7. RB Concrete Outline Plan at EL 17500

{{{Security-Related Information – Withheld Under 10 CFR 2.390}}}

Figure 2.16.5-8. RB Concrete Outline Plan at EL 27000

{{{Security-Related Information – Withheld Under 10 CFR 2.390}}}

Figure 2.16.5-9. RB Concrete Outline Plan at EL 34000

{{{Security-Related Information – Withheld Under 10 CFR 2.390}}}

Figure 2.16.5-10. RB Concrete Outline N-S Section

{{{Security-Related Information – Withheld Under 10 CFR 2.390}}}

Figure 2.16.5-11. RB Concrete Outline E-W Section

{{{Security-Related Information – Withheld Under 10 CFR 2.390}}}

2.16.6 Control Building

Design Description

The Control Building (CB) houses the essential electrical, control and instrumentation equipment, the Main Control Room(MCR), and the CB HVAC equipment. The CB is a reinforced concrete box type shear wall structure consisting of walls and slabs and is supported on a foundation mat. The CB structure is a Seismic Category I structure.

The key characteristics of the CB are as follows:

(1) The CB is designed and constructed to accommodate the dynamic, static, and thermal loading conditions associated with the various loads and load combinations, which form the structural design basis. The loads are those associated with:

- Natural phenomena—wind, floods, tornadoes (including tornado missiles), earthquakes, rain and snow.
- Internal events—floods, .
- Normal plant operation—live loads, dead loads and temperature effects.

(2) The functional arrangement of the CB is as described the Design Description of this Subsection 2.16.6 and is as shown in Figures 2.16.6-1 through 2.16.6-5.

(3) The critical CB dimensions used for seismic analyses and the acceptable tolerances are provided in Table 2.16.6-1.

(4) The MCR envelope is separated from the rest of the CB by walls, floors, doors and penetrations, which have three-hour fire ratings.

(5) The lowest elevation in the CB is divided into separate divisional areas for instrumentation and control equipment. CB flooding resulting from component failures in any of the CB divisions does not prevent safe shutdown of the reactor.

For external flooding, protection features are:

a. Exterior access openings sealed in external walls below flood and groundwater levels.

b. Water seals at pipe penetrations installed in external walls below flood and groundwater levels.

c. Water stops provided in expansion and construction joints below flood and groundwater levels.

For internal flooding, protection features are:

a. Flood water in one division is prevented from propagating to other division(s) by divisional walls, sills and watertight doors.

b. Equipment necessary for safe shutdown is located above the maximum flood level for that location or is qualified for flood conditions.

Inspections, Tests, Analyses and Acceptance Criteria

Table 2.16.6-2 provides a definition of the inspections, test and/or analyses, together with associated acceptance criteria for the Control Building.

Table 2.16.6-1

Critical Dimensions of Control Building – Part 1

Label	Wall or Section Description	Column Line or Region	Floor Elevation or Elevation Range (EL: mm)	Concrete Thickness (mm)	Tolerance (mm)
1	Wall at Column Line C1	From CA to CD	From -7400 to 8560	900	+15/-10
2	Wall at Column Line C5	From CA to CD	From -7400 to 8560	900	+15/-10
3	Wall at Column Line CA	From C1 to C5	From -7400 to 8560	900	+15/-10
4	Wall at Column Line CD	From C1 to C5	From -7400 to 8560	900	+15/-10
5	Wall at Column Line C3	From CA to CB	From -7400 to -2500	1000	+25/-20
6	Wall at Column Line C3	From CC to CD	From -7400 to -2500	1000	+25/-20
7	Wall at Column Line C1	From CA to CD	From 9060 to 13100	700	+15/-10
8	Wall at Column Line C5	From CA to CD	From 9060 to 13100	700	+15/-10
9	Wall at Column Line CA	From C1 to C5	From 9060 to 13100	700	+15/-10
10	Wall at Column Line CD	From C1 to C5	From 9060 to 13100	700	+15/-10
11	Basemat	From C1 to C5 and CA to CD	-7400	3000	+50/-20
12	Floor	From C1 to C5 and CA to CD	-2000	500	+15/-10
13	Floor	From C1 to C5 and CA to CD	4650	500	+15/-10
14	Floor	From C1 to C5 and CA to CD	9060	500	+15/-10
15	Roof	From C1 to C5 and CA to CD	13800	700	+15/-10

Table 2.16.6-1

Critical Dimensions of Control Building – Part 2

Key Dimension	Reference Dimension	Nominal Dimension (mm)	Tolerance (mm)
Distance from Outside Surface of Wall at Column Line CA to Column Line CB when Measured at Column Line C1	X1 (Figure 2.16.6-1)	10400	+/-300
Distance from Outside Surface of Wall at Column Line CD to Column Line CB when Measured at Column Line C1	X2 (Figure 2.16.6-1)	13400	+/-300
Distance from Outside Surface of Wall at Column Line C1 to Column Line C3 when Measured at Column Line CA	X3 (Figure 2.16.6-1)	15150	+/-300
Distance from Outside Surface of Wall at Column Line C5 to Column Line C3 when Measured at Column Line CA	X4 (Figure 2.16.6-1)	15150	+/-300
Distance from Top of Basemat to Design Plant Grade	X5 (Figure 2.16.6-5)	12050	+/-300
Deleted			
Distance from Design Plant Grade to Top Surface of Roof	X6 (Figure 2.16.6-5)	9150	+/-300

Table 2.16.6-2

ITAAC For The Control Building

Design Commitment	Inspections, Tests, Analyses	Acceptance Criteria
1. The CB is designed and constructed to accommodate the dynamic, static, and thermal loading conditions associated with the various loads and load combinations, which form the structural design basis. The loads are those associated with: • Natural phenomena—wind, floods, tornadoes (including tornado missiles), earthquakes, rain and snow. • Internal events—floods. • Normal plant operation—live loads, dead loads and temperature effects.	Analyses of the as-built CB loads will be conducted.	Report(s) document that the as-built CB conforms to the structural design basis loads specified in the Design Description of this subsection 2.16.6 associated with: • Natural phenomena—wind, floods, tornadoes (including tornado missiles), earthquakes, rain and snow. • Internal events—floods. • Normal plant operation—live loads, dead loads and temperature effects
2. The functional arrangement of the CB is as described the Design Description of this Subsection 2.16.6 and is as shown in Figures 2.16.6-1 through 2.16.6-5.	Inspections of the as-built CB will be conducted.	Report(s) document that the CB conforms to the functional arrangement described in the Design Description of this Subsection 2.16.6 and as shown in Figures 2.16.6-1 through 2.16.6-5.

Table 2.16.6-2

ITAAC For The Control Building

Design Commitment	Inspections, Tests, Analyses	Acceptance Criteria
3. The critical CB dimensions and acceptable tolerance are provided in Table 2.16.6-1.	Inspection of the as-built CB will be performed. Deviations from the design conditions will be analyzed using the design basis loads.	Report(s) exist which reconcile construction deviations from the critical dimensions and tolerances specified in Table 2.16.6-1 and conclude that the as-built CB will withstand the design basis loads specified in the Design Description of this subsection 2.16.6 without loss of structural integrity or the safety-related functions.
4. The MCR envelope is separated from the rest of the CB by walls, floors, doors and penetrations, which have a three-hour fire rating.	Inspections of the as-built CB will be conducted.	Inspection report(s) document that the as-built CB has a MCR envelope separated from the rest of the CB by walls, floors, doors and penetrations with ≥3-hour fire rating.

Table 2.16.6-2

ITAAC For The Control Building

Design Commitment	Inspections, Tests, Analyses	Acceptance Criteria
5. The lowest elevation in the CB is divided into separate divisional areas for instrumentation and control equipment. CB flooding resulting from component failures in any of the CB divisions does not prevent safe shutdown of the reactor. For external flooding, protection features are: a. Exterior access openings sealed in external walls below flood and groundwater levels. b. Water seals at pipe penetrations installed in external walls below flood and groundwater levels. c. Water stops provided in expansion and construction joints below flood and groundwater levels. maximum flood level for that location or is qualified for flood conditions.	Inspections of the as-built CB flood control features will be conducted.	Inspection report(s) document that the as-built CB contains the following features: For external flooding: a. Exterior access openings are sealed in external walls below flood and groundwater levels. b. Water seals at pipe penetrations are installed in external walls below flood and groundwater levels. c. Water stops are provided in expansion and construction joints below flood and groundwater levels.

Table 2.16.6-2

ITAAC For The Control Building

Design Commitment	Inspections, Tests, Analyses	Acceptance Criteria
5. (continued) For internal flooding, protection features are: a. Flood water in one division is prevented from propagating to other division(s) by divisional walls, sills and watertight doors. b. Equipment necessary for safe shutdown is located above the maximum flood level for that location or is qualified for flood conditions.		For internal flooding: a. Flood water in one division is prevented from propagating to other division(s) by divisional walls, sills and watertight doors. b. Equipment necessary for safe shutdown is located above the maximum flood level for that location or is qualified for flood conditions.

Figure 2.16.6-1. CB Concrete Outline Plan at EL –7400

{{{Security-Related Information – Withheld Under 10 CFR 2.390}}}

Figure 2.16.6-2. CB Concrete Outline Plan at EL –2000

{{{Security-Related Information – Withheld Under 10 CFR 2.390}}}

Figure 2.16.6-3. CB Concrete Outline Plan at EL 4650

{{{Security-Related Information – Withheld Under 10 CFR 2.390}}}

Figure 2.16.6-4. CB Concrete Outline Plan at EL 9060

{{{Security-Related Information – Withheld Under 10 CFR 2.390}}}

Figure 2.16.6-5. CB Concrete Outline E-W Section

{{{Security-Related Information – Withheld Under 10 CFR 2.390}}}

2.16.7 Fuel Building

Design Description

The Fuel Building (FB) contains the spent fuel pool, cask loading area, fuel handling systems and storage areas, lower connection to the inclined fuel transfer system, overhead crane, and other plant systems and equipment. The FB is a Seismic Category I structure except for the penthouse that houses HVAC equipment. The penthouse is a Seismic Category II structure. The FB is a rectangular reinforced concrete box type shear wall structure consisting of walls and slabs and is supported on a foundation mat. The FB is integrated with the RB, sharing a common wall between the RB and FB as well as a large common foundation mat. The building is partially embedded.

There is no safety-related component in the FB that could be affected by internal flooding in this structure. Flooding in the FB could not affect the RB because the connection points in the lower elevation are watertight. To protect the FB against external flooding, penetrations in the external walls below flood level are provided with watertight seals.

The key characteristics of the FB are as follows:

(1) The FB is designed and constructed to accommodate the dynamic, static, and thermal loading conditions associated with the various loads and load combinations, which form the structural design basis. The loads are those associated with:

- Natural phenomena—wind, floods, tornadoes (including tornado missiles), earthquakes, rain and snow;
- Internal events—floods; and
- Normal plant operation—live loads, dead loads and temperature effects.

(2) The functional arrangement of the FB is as described in the Design Description of this Subsection 2.16.7 and is as shown in Figures 2.16.7-1 through 2.16.7-6.

(3) The critical dimensions of the FB used for seismic analyses and the acceptable tolerance are provided in Table 2.16.7-1.

(4) The walls forming the boundaries of the FB and penetrations through these walls have three-hour fire ratings.

(5) The FB external flooding protection features are:

  (1) Exterior access openings are sealed in external walls below flood and groundwater levels;

  (2) Water seals at pipe penetrations are installed in external walls below flood and groundwater levels; and

  (3) Water stops are in expansion and construction joints below flood and groundwater levels.

Inspections, Tests, Analyses and Acceptance Criteria

Table 2.16.7-2 provides a definition of the inspections, test and/or analyses, together with associated acceptance criteria for the Fuel Building.

Table 2.16.7-1

Critical Dimensions of Fuel Building – Part 1

Label	Wall or Section Description	Column Line or Region	Floor Elevation or Elevation Range (EL: mm)	Concrete Thickness (mm)	Tolerance (mm)
1	Wall at Column Line F3	From FA to between FB and FC	From -10000 to 3350	3640	+25/-20
2	Wall at Column Line F3	From between FB and FC to FF	From -11500 to 3350	2000	+25/-20
3	Wall at Column Line FA	From F1 to F3	From -10000 to 3350	2000	+25/-20
4	Wall at Column Line FF	From F1 to F3	From -11500 to 3350	2000	+25/-20
5	Wall between Column Lines F1 and F2	From FA to FB	From -10000 to 4650	4500	+25/-20
6	Wall between Column Lines F1 and F2	From FB to between FB and FC	From -10000 to 4650	1935	+25/-20
7	Wall between Column Lines F1 and F2	From between FB and FC to FC	From -10000 to -6400	2000	+25/-20
8	Wall between Column Lines F1 and F2 (Wall between Cask Pit and Incline Fuel Transfer Tube Pit)	From between FB and FC to FC	From -10000 to 4650	1000	+25/-20
9	Wall between Column Lines F1 and F2	From FE to FF	From -11500 to -7200	1000	+25/-20
10	Wall at Column Line F2	From between FE and FF to FF	From -11500 to -7200	1000	+25/-20
11	Wall between Column Lines F2 and F3	From between FB and FC to FC	From -10000 to -1300	1150	+25/-20
12	Wall between Column Lines F2 and F3	From FE to FF	From -11500 to -7200	1000	+25/-20
13	Wall between Column Lines FB and FC	From between F1 and F2 to F3	From -10000 to 4650	1500	+25/-20
14	Wall at Column Line FC	From F1 to between F1 and F2	From -11500 to 4650	1500	+25/-20
15	Wall at Column Line FC	From between F1 and F2 to F3	From -11500 to 3350	1000	+25/-20
16	Wall at Column Line FE	From between F1 and F2 to F2 and F3	From -11500 to -7200	1000	+25/-20
17	Wall at Column Line FE	From between F2 and F3 to F3	From -11500 to -7200	600	+15/-10
18	Wall between Column Lines FB and FC	From F1 to F1 and F2	From -6400 to 4650	2000	+25/-20
19	Wall between Column Lines F2 and F3	From between FB and FC to FC	From -1300 to 3350	1000	+25/-20
20	Wall at Column Line F3	From FA to FF	From 4650 to 22500	1000	+25/-20

Table 2.16.7-1

Critical Dimensions of Fuel Building – Part 1

Label	Wall or Section Description	Column Line or Region	Floor Elevation or Elevation Range (EL: mm)	Concrete Thickness (mm)	Tolerance (mm)
21	Wall at Column Line FA	From F1 to F3	From 4650 to 21800	1000	+25/-20
22	Wall at Column Line FF	From F1 to F3	From 4650 to 21800	1000	+25/-20
23	Basemat of Spent Fuel Pool, Cask Pit, and Incline Fuel Transfer Tube Pit	Not Applicable	-10000	5500	+50/-20
24	Basemat excluding Spent Fuel Pool, Cask Pit, and Incline Fuel Transfer Tube Pit	Not Applicable	-11500	4000	+50/-20
25	Floor	From F1 to F3 and FC to FF	-6400	800	+15/-10
26	Floor	From F1 to F3 and FC to FF	-1000	800	+15/-10
27	Floor (Cask Pit)	Not Applicable	-1300	1150	+25/-20
28	Floor	From F1 to F3 and FC to FF	4650	1300	+25/-20
29	Roof	From F1 to F3 and FA to FF	22500	700	+15/-10

Table 2.16.7-1

Critical Dimensions of Fuel Building – Part 2

Key Dimension	Reference Dimension	Nominal Dimension (mm)	Tolerance (mm)
Distance from Outside Surface of Wall at Column Line FA to Column Line FC when Measured at Column Line F1	X1 (Figure 2.16.7-1)	21700	+/-300
Distance from Outside Surface of Wall at Column Line FF to Column Line FC when Measured at Column Line F1	X2 (Figure 2.16.7-1)	27300	+/-300
Distance between Outside Surface of Walls at Column Lines R7 and F3 when Measured at Column Line FA	X3 (Figure 2.16.7-1)	21000	+/-300
Distance from Top of Basemat to Design Plant Grade (Basemat excluding Spent Fuel Pool, Cask Pit, and Incline Fuel Transfer Tube Pit)	X4 (Figure 2.16.7-6)	16150	+/-300
Deleted			
Distance from Design Plant Grade to Top Surface of Roof (Excluding C-II Portion)	X5(Figure 2.16.7-6)	17850	+/-300

Table 2.16.7-2

ITAAC For The Fuel Building

Design Commitment	Inspections, Tests, Analyses	Acceptance Criteria
1. The FB is designed and constructed to accommodate the dynamic, static, and thermal loading conditions associated with the various loads and load combinations, which form the structural design basis. The loads are those associated with: • Natural phenomena—wind, floods, tornadoes (including tornado missiles), earthquakes, rain and snow; • Internal events—floods; and • Normal plant operation—live loads, dead loads and temperature effects.	Analyses of the as-built FB will be conducted.	Report(s) document that the as-built FB conforms to the structural design basis loads specified in the Design Description of this subsection 2.16.7 associated with: • Natural phenomena—wind, floods, tornadoes (including tornado missiles), earthquakes, rain and snow; • Internal events—floods; and • Normal plant operation—live loads, dead loads and temperature effects.
2. The functional arrangement of the FB is as described in the Design Description of this Subsection 2.16.7 and is as shown in Figures 2.16.7-1 through 2.16.7-6.	Inspections of the as-built FB will be conducted.	Report(s) document that the FB conforms to the functional arrangement described in the Design Description of this Subsection 2.16.7 and as shown in Figures 2.16.7-1 through 2.16.7-6.
3. The critical dimensions and acceptable tolerances for the FB are as described in Table 2.16.7-1.	Inspection of the FB will be performed. Deviations from the design conditions will be analyzed using the design basis loads.	Report(s) exist which reconcile construction deviations from the critical dimensions and tolerances specified in Table 2.16.7-1 and conclude that the as-

Table 2.16.7-2

ITAAC For The Fuel Building

Design Commitment	Inspections, Tests, Analyses	Acceptance Criteria
		built FB will withstand the design basis loads specified in the Design Description of this subsection 2.16.7 without loss of structural integrity or the safety-related functions.
4. The walls forming the boundaries of the FB and penetrations through these walls have three-hour fire ratings.	Inspections of the as-built FB walls and penetrations will be conducted.	Inspection report(s) document that the as-built walls forming the boundaries of the FB and penetrations through these walls have ≥ 3-hour fire ratings.
5. The FB is protected against an external flooding. Protection features are: (1) Exterior access openings are sealed in external walls below flood and groundwater levels. (2) Water seals at pipe penetrations are installed in external walls below flood and groundwater levels. (3) Water stops are in expansion and construction joints below flood and groundwater levels.	Inspection of the as-built FB flood control features will be conducted.	Inspection report(s) document that the following as-built FB flood protection features exist: Protection features are: (1) Exterior access openings are sealed in external walls below flood and groundwater levels. (2) Water seals at pipe penetrations are installed in external walls below flood and groundwater levels. (3) Water stops are provided in expansion and construction joints below flood and groundwater levels.

Figure 2.16.7-1. FB Concrete Outline Plan at EL –11500

{{{Security-Related Information – Withheld Under 10 CFR 2.390}}}

Figure 2.16.7-2. FB Concrete Outline Plan at EL –6400

{{{Security-Related Information – Withheld Under 10 CFR 2.390}}}

Figure 2.16.7-3. FB Concrete Outline Plan at EL –1000

{{{Security-Related Information – Withheld Under 10 CFR 2.390}}}

Figure 2.16.7-4. FB Concrete Outline Plan at EL 4650

{{{Security-Related Information – Withheld Under 10 CFR 2.390}}}

Figure 2.16.7-5. FB Concrete Outline Plan at EL 22500

{{{Security-Related Information – Withheld Under 10 CFR 2.390}}}

Figure 2.16.7-6. FB Concrete Outline N-S Section

{{{Security-Related Information – Withheld Under 10 CFR 2.390}}}

2.16.8 Turbine Building

Design Description

No ITAAC are required for this system.

2.16.9 Radwaste Building

Design Description

No ITAAC are required for this system.

2.16.10 Other Buildings and Structures

Design Description

No ITAAC are required for this system.

2.17 INTAKE STRUCTURE AND SERVICING EQUIPMENT

2.17.1 Intake and Discharge Structure

No ITAAC are required for this system.

2.18 YARD STRUCTURES AND EQUIPMENT

2.18.1 Oil Storage and Transfer Systems

No ITAAC are required for this system.

2.18.2 Site Security

No ITAAC are required for this system.

2.19 PLANT SECURITY SYSTEM

Design Description

The physical security system provides physical features to detect, delay, assist response to, and defend against the design basis threat (DBT) for radiological sabotage. The physical security system consists of physical barriers and an intrusion detection system. The details of the physical security system are categorized as Safeguards Information. The physical security system provides protection for vital equipment and plant personnel.

(1) Vital equipment:

a. Vital equipment shall be located only within a vital area.

b. Access to vital equipment requires passage through at least two physical barriers.

(2) Physical barriers for the protected area perimeter are not part of vital area barrier.

(3) Isolation zones exist in outdoor areas adjacent to the physical barrier at the perimeter of the protected area that allows 20 feet of observation on either side of the barrier.

(4) Intrusion detection system can detect penetration or attempted penetration of the protected area barrier.

(5) Isolation zones and exterior areas within the protected area are provided with illumination to permit observation of abnormal presence or activity of persons or vehicles.

(6) The external walls, doors, ceiling and floors in the main control room, central alarm station, and the last access control function for access to the protected area are resistant to at least a UL level IV round.

(7) The vehicle barrier system is installed and located at the necessary stand-off distance to protect against the DBT vehicle bombs.

(8) Access control points are established to:

a. Control personnel and vehicle access into the protected area.

b. Detect firearms, explosives, and incendiary devices at the protected area access points.

(9) An access control system with numbered picture badges is installed for use by individuals who are authorized access to protected areas without escort.

(10) Unoccupied vital areas are locked and alarmed with activated intrusion detection systems that annunciate in the Central and Secondary Alarm Stations upon intrusion into a vital area.

(11) Security alarm annunciation occurs in the central alarm station and in at least one other continuously manned station not necessarily onsite.

(12) Secondary security power supply system for alarm annunciator equipment and non-portable communications equipment is located within a vital area.

(13) Security all alarm devices including transmission lines to annunciators are tamper indicating and self-checking, (e.g. an automatic indication is provided when failure of the alarm system or a component occurs, or when on standby power.) Alarm annunciation

shall indicate the type of alarm, (e.g., intrusion alarms, emergency exit alarm, etc.) and location.

(14) Equipment exists to record onsite security alarm annunciation including the location of the alarm, false alarm, alarm check, and tamper indication and the type of alarm, location, alarm circuit, date, and time.

(15) Emergency exits through the protected area perimeter and vital area boundaries are alarmed.

(16) Central and secondary alarm stations:

a. Central and secondary alarm stations have conventional (land line) telephone service and other communication capabilities with local law enforcement authorities.

b. Central and secondary alarm stations are capable of continuous communication with security personnel.

Inspections, Tests, Analyses, and Acceptance Criteria

Table 2.19-1 provides a definition of the inspections, tests and/or analysis, together with associated acceptance criteria for physical security system.

Table 2.19-1

ITAAC For Plant Security System

Design Commitment	Inspections, Tests, Analyses	Acceptance Criteria
1. Vital Equipment a) Vital equipment shall be located only within a vital area. b) Access to vital equipment requires passage through at least two physical barriers.	a) Inspections will be performed to confirm that vital equipment is located within a vital area. b) Inspections will be performed to confirm that access to vital equipment requires passage through at least two physical barriers..	A report exists and concludes that: a) Vital equipment is located only within a vital area b) Access to the vital equipment requires passage through at least two physical barriers..
2. Physical barriers for the protected area perimeter are not part of vital area barrier..	An inspection of the protected area perimeter barrier will be performed to verify that physical barriers at the perimeter of the protected area are separated from any other barrier designated as a vital area barrier.	A report exists and concludes that physical barriers at the perimeter of the protected area are separated from any other barrier designated as a vital area barrier.
3. Isolation zones exist in outdoor areas adjacent to the physical barrier at the perimeter of the protected area that allows 20 feet of observation on either side of the barrier..	An inspection of the isolation zone will be performed to verify that the isolation zones exist in outdoor areas adjacent to the physical barrier at the perimeter of the protected area and are at least as large as specified in the design and allows 20 feet of observation of the activities of people on either side of the barrier in the event of its penetration or attempted penetration.	A report exists and concludes that isolation zones exist in outdoor areas adjacent to the physical barrier at the perimeter of the protected area and are at least as large as specified in the design and allows 20 feet of observation of the activities of people on either side of the barrier in the event of its penetration or attempted penetration.

Table 2.19-1

ITAAC For Plant Security System

Design Commitment	Inspections, Tests, Analyses	Acceptance Criteria
4. Intrusion detection system can detect penetration or attempted penetration of the protected area barrier	Tests, inspections or a combination of tests and inspections of the intrusion detection system will be performed to verify the system can detect penetration or attempted penetration of the protected area barrier and that subsequent alarms annunciate in both the Central Alarm Station and Secondary Alarm Station..	A report exists and concludes that the intrusion detection system can detect penetration or attempted penetration of the protected area barrier and that subsequent alarms annunciate in the Central Alarm Station and Secondary Alarm Station.
5. Isolation zones and exterior areas within the protected area are provided with illumination to permit observation of abnormal presence or activity of persons or vehicles	Inspection of the illumination in the isolation zones and external areas of the protected area will be performed to confirm sufficient illumination to permit observation and detection per design	A report exists and concludes that illumination in isolation zones and exterior areas within the protected area is 0.2 foot-candles measured horizontally at ground elevation or sufficient to permit observation and detection per design.
6. The external walls, doors, ceiling and floors in the main control room, central alarm station, and the last access control function for access to the protected area are resistant to at least a UL level IV round.	Type test, analysis or a combination of type test and analysis will be performed for the external walls, doors, ceilings, floors, and any windows in the walls in the main control room, central alarm station, and the enclosure that houses the individual that has the last access control function for access into the protected area to ensure they are resistant to at least a UL level 4 round.	A report exists and concludes that the walls, doors, ceilings, floors in the main control room, the central alarm station, and the location within which the last access control function for access to the protected area are bullet resistant to at least a UL level 4 round.

Table 2.19-1

ITAAC For Plant Security System

Design Commitment	Inspections, Tests, Analyses	Acceptance Criteria
7. The vehicle barrier system is installed and located at the necessary stand-off distance to protect against the DBT vehicle bombs.	Type test, inspections, analysis or a combination of type tests, inspections and analysis will be performed for the vehicle barrier system to ensure it will protect against the DBT vehicle bombs based upon the stand-off distance of the system.	A report exists and concludes that the vehicle barrier system will protect against the DBT vehicle bombs based upon the stand-off distance of the system.
8. Access control points are established to: a) Control personnel and vehicle access into the protected area. b) Detect firearms, explosives, and incendiary devices at the protected area access points.	A test, inspection, or combination of tests and inspections of installed systems and equipment will be performed to verify that access control points to the protected area exist and that: a) All personnel and vehicle access into the protected area is controlled. b) Detection equipment is capable of detecting explosives, incendiary devices, and firearms at the protected area access points.	A report exists and concludes that: a) Access points for the protected area are configured to control access. b) Detection equipment is capable of detecting firearms, incendiary devices, and explosives at the protected area access points.
9. An access control system with numbered picture badges is installed for use by individuals who are authorized access to protected areas without escort. .	A test of the access control system with numbered picture badges will be performed to verify that unescorted access to protected areas is granted only to authorized personnel..	A report exists and concludes that the access authorization system with numbered picture badges can identify and authorize protected area access only to those personnel with unescorted access authorization.

Table 2.19-1

ITAAC For Plant Security System

Design Commitment	Inspections, Tests, Analyses	Acceptance Criteria
10. Unoccupied vital areas are locked and alarmed with activated intrusion detection systems that annunciate in the Central and Secondary Alarm Stations upon intrusion into a vital area.	A test, inspection, or a combination of tests and inspections will be performed to verify that unoccupied vital areas are locked and that intrusion will be detected and annunciated in both the Central Alarm Station and Secondary Alarm Station.	A report exists and concludes that unoccupied vital areas are locked and that intrusion will be detected and annunciated in both the Central Alarm Station and Secondary Alarm Station.
11. Security alarm annunciation occurs in the central alarm station and in at least one other continuously manned station not necessarily onsite.	Test, inspection or a combination of test and inspections of the installed systems will be performed to ensure that security alarms annunciate in the central alarm station and in at least one other continuously manned station.	Test, inspection or a combination of test and inspections of the installed systems will be performed to ensure that all security alarms annunciate in the central alarm station and in at least one other continuously manned station.
12. Secondary security power supply system for alarm annunciator equipment and non-portable communications equipment is located within a vital area..	The location of secondary security power supply equipment and non-portable communications equipment is located within a vital area will be verified by inspection.	Secondary security power supply equipment is located within a vital area.

Table 2.19-1

ITAAC For Plant Security System

Design Commitment	Inspections, Tests, Analyses	Acceptance Criteria
13. Security alarm devices including transmission lines to annunciators are tamper indicating and self-checking, (e.g. an automatic indication is provided when failure of the alarm system or a component occurs, or when on standby power.) Alarm annunciation shall indicate the type of alarm, (e.g., intrusion alarms, emergency exit alarm, etc.) and location.	A test will be performed to verify that security alarms including transmission lines to annunciators are tamper indicating and self-checking, (e.g. an automatic indication is provided when failure of the alarm system or a component occurs, or when on standby power) and that alarm annunciation shall indicate the type of alarm, (e.g., intrusion alarms, emergency exit alarm, etc.) and location.	A report exists and concludes that security alarm devices including transmission lines to annunciators are tamper indicating and self-checking (e.g., an automatic indication is provided when failure of the alarm system or a component occurs, or when the system is on standby power) and that alarm annunciation shall indicate the type of alarm, (e.g., intrusion alarms, emergency exit alarm, etc.) and location.
14. Equipment exists to record onsite security alarm annunciation including the location of the alarm, false alarm, alarm check, and tamper indication and the type of alarm, location, alarm circuit, date, and time.	Test, analysis or a combination of test and analysis will be performed to ensure that equipment is capable of recording each onsite security alarm annunciation including the location of the alarm, false alarm, alarm check, and tamper indication and the type of alarm, location, alarm circuit, date, and time.	A report exists and concludes that equipment is capable of recording each onsite security alarm annunciation including the location of the alarm, false alarm, alarm check, and tamper indication and the type of alarm, location, alarm circuit, date, and time.
15. Emergency exits through the protected area perimeter and vital area boundaries are alarmed.	Test, inspection, analysis or a combination of test, inspection, and analysis will be performed to verify that emergency exits through the protected area perimeter and vital area boundaries are alarmed.	A report exists and concludes that emergency exits through the protected area perimeter and vital area boundaries are alarmed.

Table 2.19-1

ITAAC For Plant Security System

Design Commitment	Inspections, Tests, Analyses	Acceptance Criteria
16.Central and secondary alarm stations:	Test, inspection, analysis or a combination of test, inspection and analysis will be performed to verify the following:	A report exists and concludes the fowling:
a Central and secondary alarm stations have conventional (land line) telephone service and other communication capabilities with local law enforcement authorities.	a) The alarm stations are equipped with the conventional (land line) telephone service and other capability to communicate with local law enforcement authorities.	a) The alarm stations are equipped with conventional (land line) telephone service and other capability to communicate with local law enforcement authorities.
b. Central and secondary alarm stations are capable of continuous communication with security personnel.	b) aThe alarm stations are equipped with the capability to continuously communicate with each security officer, watchman or armed response individual, or any security personnel that have responsibilities during a contingency event.	b) The alarm stations are equipped with the capability to continuously communicate with each security officer, watchman or armed response individual, or any security personnel that have responsibilities during a contingency event.

3. NON-SYSTEM BASED MATERIAL

3.1 DESIGN OF PIPING SYSTEMS AND COMPONENTS

Design Description

Piping systems and their components are designed and constructed in accordance with their applicable design code requirements identified in the individual system design specifications. The piping systems have a design life of 60 years. Systems which are ASME Code Class 1, 2, or 3, and subject to ASME Code, Section III, pressure boundary requirement. The specific Tier 1 sections that contain these systems are as follows:

2.1.1 Reactor Pressure Vessel

2.1.2 Nuclear Boiler System

2.2.2 Control Rod Drive System

2.2.4 Standby Liquid Control System

2.4.1 Isolation Condenser System

2.4.2 Gravity-Driven Cooling System

2.6.1 Reactor Water Cleanup/Shutdown Cooling System

2.6.2 Fuel and Auxiliary Pools Cooling System

2.11.1 Turbine Main Steam System

2.15.1 Containment System

2.15.4 Passive Containment Cooling System

The scope of Section 3.1 ITAAC 3 and 6 is as stated in the ITAAC.

(1) Deleted. See system ITAAC for piping requirements.

(2) Deleted. See system ITAAC for piping requirements.

(3) Systems, structures, and components, that are required to be functional during and following an SSE, shall be protected against or qualified to withstand the dynamic and environmental effects associated with analyses of postulated failures in Seismic Category I and nonsafety-related piping systems..

(4) Deleted.

(5) Deleted.

(6) On an individual component and/or system basis, the as-built systems, structures, and components shall be reconciled with the analyses results of the postulated failures in Seismic Category I and nonsafety-related piping systems..

Inspections, Tests, Analyses and Acceptance Criteria

Table 3.1-1 provides a definition of the inspections, test and/or analyses, together with associated acceptance criteria for the Piping Design.

Table 3.1-1

ITAAC For The Design of Piping Systems and Components

Design Commitment	Inspections, Tests, Analyses	Acceptance Criteria
1. Deleted. See system ITAAC for piping requirements.		
2. Deleted. See system ITAAC for component requirements.		

Table 3.1-1

ITAAC For The Design of Piping Systems and Components

Design Commitment	Inspections, Tests, Analyses	Acceptance Criteria
3. Systems, structures, and components, that are required to be functional during and following an SSE, shall be protected against or qualified to withstand the dynamic and environmental effects associated with analyses of postulated failures in Seismic Category I and nonsafety-related piping systems.	Inspections of the pipe analysis report will be conducted. Pipe break events involving high-energy fluid systems are analyzed for the effects of pipe whip, jet impingement, flooding, room pressurization, and temperature effects. Pipe break events involving moderate-energy fluid systems are analyzed for wetting from spray, flooding, and other environmental effects, as appropriate. {{Design Acceptance Criteria}}	A report documents that the as-designed pipe analysis concludes that for each postulated piping failure, the reactor can be shut down safely. Reports document the results of the analyses to determine where protection features are necessary to mitigate the consequences of a pipe break. {{Design Acceptance Criteria}}

Table 3.1-1

ITAAC For The Design of Piping Systems and Components

Design Commitment	Inspections, Tests, Analyses	Acceptance Criteria
4. Deleted.		
5. Deleted.		.
6. On an individual component and/or system basis, the as-built systems, structures, and components shall be reconciled with the analyses results of the postulated failures in Seismic Category I and nonsafety-related piping systems..	A reconciliation analysis using the as-designed and as-built information will be performed. Inspect the as-built piping systems and equipment to identify that the features that protect against dynamic effects of pipe failures, such as whip restraints, equipment shields, drainage systems, and physical separation of piping, equipment, and instrumentation are installed as defined in the design analyses.	On an individual component and/or system basis, a report documents that the protective features are installed in the as-built plant as described in the design and reconciliation analysis.

3.2 SOFTWARE DEVELOPMENT

Inspections, Tests, Analyses, and Acceptance Criteria Summary

Design Description

NUREG-0800, Branch Technical Position HICB-14 (BTP 7-14), outlines activities to be considered when establishing a software development program for software-based Instrumentation and Control (I&C) systems. HICB-14 divides these activities into separate software development plans. The overall approach is that the software plans address and document the elements necessary to ensure the production and delivery of High Quality Software.

GEH has completed a detailed analysis of regulatory guidelines and industy standards and incorporated information from that study into the ESBWR Software Plans. Compliance with this process will provide a sound base for development of High Quality Software.

The ESBWR Instrument & Controls (I&C) Software Plans are included in two GEH documents, the ESBWR I&C Software Management Program Manual (SMPM) and the ESBWR I&C Software Quality Assurance Program Manual (SQAPM). The software plans are identified in the ESBWR Man-Machine Interface System and Human Factor & Engineering Implementation Plan. The ESBWR Cyber Security Program Plan is further defined by a separate Licensing Topical Report, ESBWR Cyber Security Program Plan (CySP).

The ESBWR I&C software program will produce requirements, design, development, and testing documents throughout the software lifecycle as described in the SMPM. Result Summary Reports, based on the software plan implementation, address the ESBWR safety-related systems described in Table 2.2.10-1 and their associated safety-related functions defined in the Task Analysis. The results summary reports are available for the NRC staff review, and are included in the list of items for Inspections, Tests, Analyses, and Acceptance Criteria.

The following is a list of the Design Commitments for the Software Development ITAAC:

(1) Implement the Software Management Plan (SMP) for the design and development of ESBWR I&C System software.

(2) Implement the Software Development Plan (SDP) for the design and development of ESBWR I&C System software.

(3) Implement the Software Quality Assurance Plan (SQAP) for the design and development of ESBWR I&C System software.

(4) Implement the Software Integration Plan (SIntP) for the design and development of ESBWR I&C System software.

(5) Implement the Software Installation Plan (SIP) for the design and development of ESBWR I&C System software.

(6) Implement the Software Operation and Maintenance Plan (SOMP) for the design and development of ESBWR I&C System software.

(7) Implement the Software Training Plan (STrngP) for the design and development of ESBWR I&C System software.

(8) Implement the Software Safety Plan (SSP) for the design and development of ESBWR I&C System software.

(9) Implement the Software Verification & Validation Plan (SVVP) for the design and development of ESBWR I&C System software.

(10) Implement the Software Configuration Management Plan (SCMP) for the design and development of ESBWR I&C System software.

(11) Implement the Cyber Security Program Plan (CySPP) for the design and development of ESBWR I&C System software.

(12) Implementation of the ESBWR I&C software program satisfactorily produces Software Design Documentation (SDD).

Inspections, Tests, Analyses and Acceptance Criteria

Table 3.2-1 provides a definition of the inspections, tests and/or analyses, together with associated acceptance criteria, which will be applied to the software associated with ESBWR safety-related systems described in Table 2.2.10-1 and their associated safety-related functions.

Because the I&C Systems technology is continually advancing, details of the system design may not be complete before the NRC issuance of a design certification. Therefore, the portions of the system design needed to complete the acceptance criteria are marked as {{Design Acceptance Criteria}}.

Table 3.2-1

ITAAC For Software Development

Design Commitment	Inspections, Tests, Analyses	Acceptance Criteria
1. Implement the Software Management Plan (SMP) for the design and development of ESBWR I&C System software.	i. An inspection is performed on the SMP results summary report(s). {{Design Acceptance Criteria}}	i. A results summary report(s) exists and it shall demonstrate that the SMP satisfactorily addresses the managerial, implementation and resource characteristics to support the ESBWR I&C Systems development. The results summary report(s) address the ESBWR safety-related systems described in Table 2.2.10-1 and their associated safety-related functions. {{Design Accpetance Criteria)
	ii. An inspection is performed on the SMP process results summary report(s).	ii. A Results Summary Report(s) exists and concludes that the SMP process defines the organizational responsibilities, activities, and management controls and demonstrates the following process characteristics: consistency, style, traceability, unambiguity and verifiability. The report shall also verify that assessments of the quality of vendor efforts are acceptable. The results summary report(s) address the ESBWR safety-related systems described in Table 2.2.10-1 and their associated safety-related functions.

Table 3.2-1

ITAAC For Software Development

Design Commitment	Inspections, Tests, Analyses	Acceptance Criteria
2. Implement the Software Development Plan (SDP) for the design and development of ESBWR I&C System software.	i. An inspection is performed on the SDP results summary report(s). {{Design Acceptance Criteria}}	i. A results summary report(s) exists and it shall demonstrate that the SDP satisfactorily addresses the managerial, implementation and resource characteristics to support the ESBWR I&C Systems development. The report shall verify that the software plan defines which tasks are associated with each life cycle phase and that inputs and outputs are defined. The report shall also ensure that methods of review, verification and validation of outputs are defined in an acceptable manor. The results summary report(s) address the ESBWR safety-related systems described in Table 2.2.10-1 and their associated safety-related functions. {{Design Acceptance Criteria}}

Table 3.2-1

ITAAC For Software Development

Design Commitment	Inspections, Tests, Analyses	Acceptance Criteria
	ii. An inspection is performed on the SDP process results summary report(s).	ii. A results summary report(s) exists and concludes that the SDP process defines the organizational responsibilities, activities, and management controls and demonstrates the following process characteristics: consistency, style, traceability, unambiguity and verifiability The results summary report(s) address the ESBWR safety-related systems described in Table 2.2.10-1 and their associated safety-related functions.
3. Implement the Software Quality Assurance Plan (SQAP) for the design and development of ESBWR I&C System software.	i. An inspection is performed on the SQAP results summary report(s) {{Design Acceptance Criteria}}	i. A results summary report(s) exists and it shall demonstrate that the SQAP satisfactorily addresses the managerial, implementation and resource characteristics to support the ESBWR I&C Systems development. The results summary report(s) address the ESBWR safety-related systems described in Table 2.2.10-1 and their associated safety-related functions. {{Design Acceptance Criteria}}
	ii. An inspection is performed on the SQAP process results summary report(s).	ii. A results summary report(s) exists and concludes that the SQAP process defines the organizational responsibilities, activities, and management controls and demonstrates the following process

Table 3.2-1

ITAAC For Software Development

Design Commitment	Inspections, Tests, Analyses	Acceptance Criteria
		characteristics: consistency, style, traceability, unambiguity and verifiability. The report shall also verify that high quality software, which performs all intended safety functions, is produced as a result of plan execution. The results summary report(s) address the ESBWR safety-related systems described in Table 2.2.10-1 and their associated safety-related functions.
4. Implement the Software Integration Plan (SIntP) for the design and development of ESBWR I&C System software.	i. An inspection is performed on the SIntP results summary report(s). {{Design Acceptance Criteria}}	i. A results summary report(s) exists and it shall demonstrate that the SIntP satisfactorily addresses the managerial, implementation and resource characteristics to support the ESBWR I&C Systems development. The results summary report(s) address the ESBWR safety-related systems described in Table 2.2.10-1 and their associated safety-related functions. {{Design Acceptance Criteria}}
	ii. An inspection is performed on the SIntP process results summary report(s).	ii. A results summary report(s) exists and concludes that the SIntP process defines the organizational responsibilities, activities, and management controls and demonstrates the following process

Table 3.2-1

ITAAC For Software Development

Design Commitment	Inspections, Tests, Analyses	Acceptance Criteria
		characteristics: consistency, style, traceability, unambiguity and verifiability. This report(s) shall also verify that methods of software integration between commercial off the shelf (COTS), as well as previously developed software (PDS) and newly developed software are satisfactory. The results summary report(s) address the ESBWR safety-related systems described in Table 2.2.10-1 and their associated safety-related functions.
5. Implement the Software Installation Plan (SIP) for the design and development of ESBWR I&C System software.	i. An inspection is performed on the SIP results summary report(s). {{Design Acceptance Criteria}}	i. A results summary report(s) and it shall demonstrate that the SIP satisfactorily addresses the managerial, implementation and resource characteristics to support the ESBWR I&C Systems development. The results summary report(s) address the ESBWR safety-related systems described in Table 2.2.10-1 and their associated safety-related functions. {{Design Acceptance Criteria}}

Table 3.2-1

ITAAC For Software Development

Design Commitment	Inspections, Tests, Analyses	Acceptance Criteria
	ii. An inspection is performed on the SIP process results summary report(s).	ii. A results summary report(s) exists and concludes that the SIP process defines the organizational responsibilities, activities, and management controls and demonstrates the following process characteristics: consistency, style, traceability, unambiguity and verifiability. The results summary report(s) address the ESBWR safety-related systems described in Table 2.2.10-1 and their associated safety-related functions.
6. Implement the Software Operations and Maintenance Plan (SOMP) for the design and development of ESBWR I&C System software.	i. An inspection is performed on the SOMP results summary report(s). {{Design Acceptance Criteria}}	i. A results summary report(s) exists and it shall demonstrate that the SOMP satisfactorily addresses the managerial, implementation and resource characteristics to support the ESBWR I&C Systems development. The results summary report(s) address the ESBWR safety-related systems described in Table 2.2.10-1 and their associated safety-related functions. {{Design Acceptance Criteria}}
	ii. An inspection is performed on the Software SOMP process results summary report(s).	ii. A results summary report(s) exists and concludes that the SOMP process defines the organizational responsibilities, activities, and management controls and

Table 3.2-1

ITAAC For Software Development

Design Commitment	Inspections, Tests, Analyses	Acceptance Criteria
		demonstrates the following process characteristics: consistency, style, traceability, unambiguity and verifiability. This report shall specify the methods of performing software operations and maintenance functions following turn over to the COL holder. The results summary report(s) address the ESBWR safety-related systems described in Table 2.2.10-1 and their associated safety-related functions.
7. Implement the Software Training Plan (STrngP) for the design and development of ESBWR I&C System software.	i. An inspection is performed on the STrngP results summary report(s). {{Design Acceptance Criteria}}	i. A results summary report(s) exists and it shall demonstrate that the STrngP satisfactorily addresses the managerial, implementation and resource characteristics to accomplish the training tasks for staff working in the design of the software based products. The results summary report(s) address the ESBWR safety-related systems described in Table 2.2.10-1 and their associated safety-related functions. {{Design Acceptance Criteria}}

Table 3.2-1

ITAAC For Software Development

Design Commitment	Inspections, Tests, Analyses	Acceptance Criteria
	ii. An inspection is performed on the STrngP process results summary report(s).	ii. A results summary report(s) exists and concludes that the STrngP process defines the organizational responsibilities, activities, and management controls and demonstrates the following process characteristics: consistency, style, traceability, unambiguity and verifiability. This report(s) shall also verify that the training tasks for staff working in the design, development, peer review, and testing of the software based products. This includes requirements for the training program of the utility operating and maintaining the software-based products. The results summary report(s) address the ESBWR safety-related systems described in Table 2.2.10-1 and their associated safety-related functions.

Table 3.2-1

ITAAC For Software Development

Design Commitment	Inspections, Tests, Analyses	Acceptance Criteria
8. Implement the Software Safety Plan (SSP) for the design and development of ESBWR I&C System software.	i. An inspection is performed on the SSP results summary report(s). {{Design Acceptance Criteria}}	i. A results summary report(s) exists and it shall demonstrate that the SSP satisfactorily addresses the managerial, implementation and resource characteristics to support the ESBWR I&C Systems development. The results summary report(s) address the ESBWR safety-related systems described in Table 2.2.10-1 and their associated safety-related functions. {{Design Acceptance Criteria}}

Table 3.2-1

ITAAC For Software Development

Design Commitment	Inspections, Tests, Analyses	Acceptance Criteria
	ii. An inspection is performed on the SSP process results summary report(s).	ii. A results summary report(s) exists and concludes that the SSP process defines the organizational responsibilities, activities, and management controls and demonstrates the following process characteristics: consistency, style, traceability, unambiguity and verifiability. This report(s) shall also verify Safety Analysis Reports demonstrate that management, implementation, and resource characteristics are maintained throughout the SW Life Cycle process. The results summary report(s) address the ESBWR safety-related systems described in Table 2.2.10-1 and their associated safety-related functions.
9. Implement the Software Verification and Validation Plan (SVVP) for the design and development of ESBWR I&C System software.	i. An inspection is performed on the SVVP results summary report(s). {{Design Acceptance Criteria}}	i. A results summary report(s) exists and it shall demonstrate that the SVVP satisfactorily addresses the managerial, implementation and resource characteristics to support the ESBWR I&C Systems development. The report shall verify that the organizational, scheduling, and financial independence is maintained throughout the development process.

Table 3.2-1

ITAAC For Software Development

Design Commitment	Inspections, Tests, Analyses	Acceptance Criteria
		The results summary report(s) address the ESBWR safety-related systems described in Table 2.2.10-1 and their associated safety-related functions. {{Design Acceptance Criteria}}
	ii. An inspection is performed on the SVVP process results summary report(s).	ii. A results summary report(s) exists and concludes that the SVVP process defines the organizational responsibilities, activities, and management controls and demonstrates the following process characteristics: consistency, style, traceability, unambiguity and verifiability. V & V Reports shall demonstrate that management, implementation, and resource characteristics are maintained throughout the SW Life Cycle process. The Requirements Traceability Matrix (RTM) shall demonstrate that management, implementation, and resource characteristics are maintained throughout the SW Life Cycle process. The results summary report(s) address the ESBWR safety-related systems described in Table 2.2.10-1 and their associated safety-related functions.

Table 3.2-1

ITAAC For Software Development

Design Commitment	Inspections, Tests, Analyses	Acceptance Criteria
10. Implement the Software Configuration Management Plan (SCMP) for the design and development of ESBWR I&C System software.	i. An inspection is performed on the SCMP results summary report(s). {{Design Acceptance Criteria}}	i. A results summary report(s) exists and it shall demonstrate that the SCMP satisfactorily addresses the managerial, implementation and resource characteristics to support the ESBWR I&C Systems development. The results summary report(s) address the ESBWR safety-related systems described in Table 2.2.10-1 and their associated safety-related functions. {{Design Acceptance Criteria}}
	ii. An inspection is performed on the SCMP process results summary report(s).	ii. A results summary report(s) exists and concludes that the SCMP process defines the organizational responsibilities, activities, and management controls and demonstrates the following process characteristics: consistency, style, traceability, unambiguity and verifiability. In addition, the report shall verify that the following items are being maintained under the control of an organization that is responsible for processing and archiving the various versions of the software as

Table 3.2-1

ITAAC For Software Development

Design Commitment	Inspections, Tests, Analyses	Acceptance Criteria
		well as supporting documentation. • Software requirements, designs, and code • Support software used in development • Libraries of software components essential to safety • Software plans that could affect quality • Test software requirements, designs, or code used in testing • Test results and analyses used to qualify software • Software documentation • Databases and software configuration data • Pre-developed software items that are safety system software • Software change documentation • Tools used in the software project for management, development, or assurance The results summary report(s) address the ESBWR safety-related systems described in Table 2.2.10-1 and their associated safety-related functions.

Table 3.2-1

ITAAC For Software Development

Design Commitment	Inspections, Tests, Analyses	Acceptance Criteria
11. Implement the Cyber Security Program Plan (CySP) for the design and development of ESBWR I&C System software.	i. An inspection is performed on the CySP results summary report(s) {{Design Acceptance Criteria}}	i. A results summary report(s) exists and it shall demonstrate that the CySP satisfactorily addresses the managerial, implementation and resource characteristics to support the ESBWR I&C Systems development. The results summary report(s) address the ESBWR safety-related systems described in Table 2.2.10-1 and their associated safety-related functions. {{Design Acceptance Criteria}}
	ii. An inspection is performed on the CySP process results summary report(s).	ii. A results summary report(s) exists and concludes that the CySP process defines the organizational responsibilities, activities, and management controls and demonstrates the following process characteristics: consistency, style, traceability, unambiguity and verifiability. The results summary report(s) address the ESBWR safety-related systems described in Table 2.2.10-1 and their associated safety-related functions.
12. Implementation of the ESBWR I&C software program satisfactorily produces	i. An inspection is performed on the SDD results summary report(s)	i. A results summary report(s) exists and it shall demonstrate that the SW Design Documentation satisfactorily addresses the

Table 3.2-1

ITAAC For Software Development

Design Commitment	Inspections, Tests, Analyses	Acceptance Criteria
Software Design Documentation (SDD).	{{Design Acceptance Criteria}}	managerial, implementation and resource characteristics to support the ESBWR I&C Systems development. The results summary report(s) address the ESBWR safety-related systems described in Table 2.2.10-1 and their associated safety-related functions. {{Design Acceptance Criteria}}
	ii. An inspection is performed on the SDD process results summary report(s).	ii. A results summary report(s) exists and concludes that the SDD processes define the organizational responsibilities, activities, and configuration management controls and demonstrates the following process characteristics: consistency, style, traceability, unambiguity and verifiability. The SDD includes the following software lifecycle design outputs and software life cycle process documentation: • Specification of functional requirements. • Documentation and review of hardware and software. • Performance of system tests and the documentation of system test results. • Performance of installation tests and inspections.

Table 3.2-1

ITAAC For Software Development

Design Commitment	Inspections, Tests, Analyses	Acceptance Criteria
		The results summary report(s) address the ESBWR safety-related systems described in Table 2.2.10-1 and their associated safety-related functions.

3.3 HUMAN FACTORS ENGINEERING

Design Description

The Human Factors Engineering (HFE) design process represents a comprehensive, synergistic, iterative design approach for the development of human-centered control and information infrastructure for the ESBWR.

HFE Program Goals - The general objectives of the program can be stated in "human-centered" terms, which, as the HFE program develops, is refined and used as a basis for HFE planning, test and evaluation activities. HFE design goals include ensuring that:

- Personnel tasks can be accomplished within time and performance criteria;
- Human-System Interfaces (HSIs), procedures, staffing/qualifications, training and management and organizational variables support a high degree of operating crew situation awareness;
- Allocation of functions accommodates human capabilities and limitations;
- Operator vigilance is maintained;
- Acceptable operator workload is met;
- Operator interfaces contribute to an error free environment; and
- Error detection and recovery capabilities are provided.

A minimum inventory of HSI comprising the human system interfaces (i.e., alarms, controls, and displays) needed to implement the plant's emergency operating procedures, bring the plant to a safe condition, and to carry out those human actions shown to be important from the probabilistic risk assessment is established and verified in the HFE program.

The elements of the ESBWR HFE Program Management are provided in the plan entitled "Man-Machine Interface System and Human Factors Engineering Implementation Plan (MMIS and HFE Implementation Plan). In the plan the following are described:

- HFE goals/objectives
- A technical program to accomplish the objectives
- The system to track HFE issues
- The HFE design team
- Management and organizational structure for the technical program

The proposed methodologies for the conducts of the HFE activities are described in separate implementation plans. The results and outcomes of the activities are summarized in individual results summary reports.

The MMIS and HFE Implementation Plan and supporting HFE activity implementation plans are submitted for NRC staff review in the pre-design project phase. The results summary reports address the ESBWR safety-related systems described in Table 2.2.10-1 and their associated safety-related functions defined in the Task Analysis. The results summary reports are available

for the NRC staff review, and are included in the list of items for Inspections, Tests, Analyses, and Acceptance Criteria.

(1) Operating Experience Review (OER) is performed in accordance with the ESBWR HFE Operating Experience Review Implementation Plan.

(2) Functional Requirements Analysis (FRA) is performed in accordance with the ESBWR HFE Functional Requirements Analysis Implementation Plan and Allocation of Functions (AOF) is performed in accordance with the ESBWR HFE Allocation of Functions Implementation Plan.

(3) Task Analysis is performed in accordance with the ESBWR HFE Task Analysis Implementation Plan.

(4) Staffing and Qualifications (S&Q) is performed in accordance with the ESBWR HFE Staffing and Qualifications Implementation Plan.

(5) Human Reliability Analysis (HRA) is performed in accordance with the ESBWR HFE Human Reliability Analysis Implementation Plan.

(6) Human System Interface (HSI) Design is performed in accordance with the ESBWR HFE Human System Interface Design Implementation Plan.

(7) Procedure Development is performed in accordance with the ESBWR HFE Procedure Development Implementation Plan.

(8) Training Development is performed in accordance with the ESBWR HFE Training Development Implementation Plan.

(9) Human Factors Verification and Validation (HF V&V)is performed in accordance with the ESBWR HFE Verification and Validation Implementation Plan.

(10) Design Implementation is performed in accordance with the ESBWR HFE Design Implementation Plan.

(11) The strategy for the Human Performance Monitoring (HPM) process is developed in accordance with the ESBWR HFE Human Performance Monitoring Implementation Plan.

Inspections, Tests, Analyses and Acceptance Criteria

Because the HSI technology is continually advancing, details of the HFE design will not be complete before the NRC issuance of a design certification. Therefore the portions needed to complete the acceptance criteria of the certification review are marked as {{Design Acceptance Criteria}}.

The inspections, tests, analyses, and acceptance criteria for the Human Factors Engineering process address the ESBWR safety-related systems described in Table 2.2.10-1 and their associated safety-related functions. Table 3.3-1 provides a definition of the inspections, test and/or analyses, together with associated acceptance criteria for Human Factors Engineering.

Table 3.3-1

ITAAC For Human Factors Engineering

Design Commitment	Inspections, Tests, Analyses	Acceptance Criteria
1. Operating Experience Review (OER) is performed in accordance with the ESBWR HFE Operating Experience Review Implementation Plan.	. An inspection is performed on the OER results summary report(s). **{{Design Acceptance Criteria}}**	A results summary report(s) exists that concludes that the OER activity was conducted in accordance with the implementation plan and contains: The scope of the OER. • The list of sources of operating experience reviewed and summary of documented results. • List of risk-important Human Actions and their resolutions from predecessor plants. • A description of the process for issue analysis, tracking, and review. **{{Design Acceptance Criteria}}** The inspections, tests, analyses, and acceptance criteria for the Human Factors Engineering process address the ESBWR safety-related systems as defined in Table 2.2.10-1 and their associated safety-related functions.
2. Functional Requirements Analysis (FRA) is performed in accordance with the ESBWR HFE Functional	An inspection is performed on the FRA and AOF results summary report(s). **{{Design Acceptance Criteria}}**	A results summary report(s) exists that concludes that the FRA and AOF activities were conducted in accordance with the

Table 3.3-1

ITAAC For Human Factors Engineering

Design Commitment	Inspections, Tests, Analyses	Acceptance Criteria
Requirements Analysis Implementation Plan and Allocation of Functions (AOF) is performed in accordance with the ESBWR HFE Allocation of Functions Implementation Plan.		implementation plans and contains: • Scope of the FRA. • Functional hierarchy for plant safety functions including the identification of Critical Safety Functions. • Plant systems and configurations that support safety functions. • Definition of high-level plant functions, their support needs, and monitoring parameters. • Scope of AOF. • Safety function allocations. **{{Design Acceptance Criteria}}** The inspections, tests, analyses, and acceptance criteria for the Human Factors Engineering process address the ESBWR safety-related systems as defined in Table 2.2.10-1 and their associated safety-related functions.
3. Task Analysis is performed in accordance with the ESBWR HFE Task Analysis Implementation Plan.	An inspection is performed on the Task Analysis results summary report(s).	A results summary report(s) exists that concludes that the Task Analysis activity was conducted in accordance with the

Table 3.3-1

ITAAC For Human Factors Engineering

Design Commitment	Inspections, Tests, Analyses	Acceptance Criteria
	{{Design Acceptance Criteria}}	implementation plan and contains: • The scope of the Task Analysis. • A list of Task descriptions. • A description of the process for documenting and retaining task analysis results. • Examples of detailed task analysis results. • List of minimum inventory of alarms, displays and controls. **{{Design Acceptance Criteria}}** The inspections, tests, analyses, and acceptance criteria for the Human Factors Engineering process address the ESBWR safety-related systems as defined in Table 2.2.10-1 and their associated safety-related functions.
4. Staffing and Qualifications (S&Q) is performed in accordance with the ESBWR HFE Staffing and Qualifications Implementation Plan.	i. An inspection is performed on the S&Q results summary report(s). **{{Design Acceptance Criteria}}**	i. A results summary report(s) exists that concludes that the S&Q design activity was conducted in accordance with the implementation plan and contains: • The scope of the S&Q activity. • A summary of design requirements and

Table 3.3-1

ITAAC For Human Factors Engineering

Design Commitment	Inspections, Tests, Analyses	Acceptance Criteria
		inputs to the S&Q. **{{Design Acceptance Criteria}}** The inspections, tests, analyses, and acceptance criteria for the Human Factors Engineering process address the ESBWR safety-related systems as defined in Table 2.2.10-1 and their associated safety-related functions.
	ii. An inspection is performed on the final S&Q results summary report(s).	ii. A final results summary report(s) exists that concludes that the S&Q process was conducted in accordance with the implementation plan and contains: • Final staffing levels and qualifications. • The basis for the S&Q concluding that issues and concerns raised in other HFE activities are addressed. The inspections, tests, analyses, and acceptance criteria for the Human Factors Engineering process address the ESBWR safety-related systems as defined in Table 2.2.10-1 and their associated safety-related functions.
5. Human Reliability Analysis (HRA) is	i. An inspection is performed on the	i. A results summary report(s) exists that

Table 3.3-1

ITAAC For Human Factors Engineering

Design Commitment	Inspections, Tests, Analyses	Acceptance Criteria
performed in accordance with the ESBWR HFE Human Reliability Analysis Implementation Plan.	HRA results summary report(s). **{{Design Acceptance Criteria}}**	concludes that the HRA design was conducted in accordance with the implementation plan and contains: • The scope of the HRA. • A list of risk-important human actions input to Human Factorsactivities. **{{Design Acceptance Criteria}}** The inspections, tests, analyses, and acceptance criteria for the Human Factors Engineering process address the ESBWR safety-related systems as defined in Table 2.2.10-1 and their associated safety-related functions.

Table 3.3-1

ITAAC For Human Factors Engineering

Design Commitment	Inspections, Tests, Analyses	Acceptance Criteria
	ii. An inspection is performed on the final HRA results summary report(s).	ii. A final results summary report(s) exists that concludes that the HRA process was conducted in accordance with the implementation plan and contains: • A reconciled list of risk-important human actions input to Human Factors activities. • A summary of how risk-important human actions are addressed in the Human Factors activities. • A summary of how measures taken in the design keep risk-important actions below the risk important threshold. • Results of the validation of the HRA assumptions concluding that HRA assumptions are valid. The inspections, tests, analyses, and acceptance criteria for the Human Factors Engineering process address the ESBWR safety-related systems as defined in Table 2.2.10-1 and their associated safety-related functions.
6. Human System Interface (HSI) Design is performed in accordance with the	i. An inspection is performed on the HSI Design results summary	i. A results summary report(s) exists that concludes that the HSI Design

Table 3.3-1

ITAAC For Human Factors Engineering

Design Commitment	Inspections, Tests, Analyses	Acceptance Criteria
ESBWR HFE Human System Interface Design Implementation Plan.	report(s). **{{Design Acceptance Criteria}}**	specification was conducted in accordance with the implementation plan and contains: • The scope of the HSI Design. • A description of the concept of operations for HSI Design. • A list of HFE standards and guideline documents used in the activity. • Descriptions of the Style Guide and design specifications for HSI design. • A list of instruments comprising the minimum inventory of HSI and that complies with RG 1.97 and supporting analysis. • A description of the functional requirement specification for HSIs. **{{Design Acceptance Criteria}}** The inspections, tests, analyses, and acceptance criteria for the Human Factors Engineering process address the ESBWR safety-related systems as defined in Table 2.2.10-1 and their associated safety-related functions.

Table 3.3-1

ITAAC For Human Factors Engineering

Design Commitment	Inspections, Tests, Analyses	Acceptance Criteria
	ii. An inspection is performed on the final HSI Design results summary report(s).	ii. A final results summary report(s) exists that concludes that the HSI Design process was conducted in accordance with the implementation plan and contains: • A summary of the methods used for the evaluation and verification of the HSI. • A description of the final inventory of HSI including alarms, information displays, and controls. The inspections, tests, analyses, and acceptance criteria for the Human Factors Engineering process address the ESBWR safety-related systems as defined in Table 2.2.10-1 and their associated safety-related functions.
7. Procedure Development is performed in accordance with the ESBWR HFE Procedure Development Implementation Plan.	i. An inspection is performed on the Procedure Development results summary report(s). **{{Design Acceptance Criteria}}** .	i. A results summary report(s) exists that concludes that the Procedure Development design was conducted in accordance with the implementation plan and contains: • The scope of the procedures

Table 3.3-1

ITAAC For Human Factors Engineering

Design Commitment	Inspections, Tests, Analyses	Acceptance Criteria
		development process. • A list of writer's guides for procedure development. • A summary of design requirements and inputs to procedure development. **{{Design Acceptance Criteria}}** The inspections, tests, analyses, and acceptance criteria for the Human Factors Engineering process address the ESBWR safety-related systems as defined in Table 2.2.10-1 and their associated safety-related functions.
	ii. An inspection is performed on the final Procedure Development results summary report(s).	ii. A final results summary report(s) exists that concludes that the Procedure Development process was conducted in accordance with the implementation plan and contains: • A description of the plant procedures derived from ESBWR EPGs. • A list of procedures and procedure

Table 3.3-1

ITAAC For Human Factors Engineering

Design Commitment	Inspections, Tests, Analyses	Acceptance Criteria
		support equipment developed. • A description of how procedures are utilized, including operator access and use of hard copy and computer based procedures. • Technical basis for severe accident management. • A description of procedure storage and laydown areas for hardcopy procedure use. • A description of the framework utilized for procedure maintenance and control of updates. The inspections, tests, analyses, and acceptance criteria for the Human Factors Engineering process address the ESBWR safety-related systems as defined in Table 2.2.10-1 and their associated safety-related functions.
8. Training Development is performed in accordance with the ESBWR HFE Training Development Implementation Plan.	i. An inspection is performed on the Training Development results summary report(s). **{{Design Acceptance Criteria}}**	i. A results summary report(s) exists that concludes that the Training Development design was conducted in accordance with the implementation plan and contains:

Table 3.3-1

ITAAC For Human Factors Engineering

Design Commitment	Inspections, Tests, Analyses	Acceptance Criteria
		• The purpose and scope of the Training Development. • The roles of organizations involved and the facilities and resources needed to satisfy the needs of the training. • A summary of design requirements and inputs to Training Development. **{{Design Acceptance Criteria}}** The inspections, tests, analyses, and acceptance criteria for the Human Factors Engineering process address the ESBWR safety-related systems as defined in Table 2.2.10-1 and their associated safety-related functions.
	ii. An inspection is performed on the final Training Development results summary report(s).	ii. A final results summary report(s) exists that concludes that the Training Development process was conducted in accordance with the implementation plan and contains: • A description of the organization and content of the Training Program. • A description of the process for developing learning objectives.

Table 3.3-1

ITAAC For Human Factors Engineering

Design Commitment	Inspections, Tests, Analyses	Acceptance Criteria
		• A description of the methods for verifying the accuracy and completeness of training course materials, concluding that the training course materials are accurate and complete. • A description of the process for refining and updating the content and conduct of training. • A description of the plan for periodic retraining of personnel. The inspections, tests, analyses, and acceptance criteria for the Human Factors Engineering process address the ESBWR safety-related systems as defined in Table 2.2.10-1 and their associated safety-related functions.
9. Human Factors Verification and Validation (HF V&V) is performed in accordance with the ESBWR HFE Human Factors Verification and Validation Implementation Plan.	An inspection is performed on the HF V&V results summary report(s).	A results summary report(s) exists that concludes that the HF V&V activity was conducted in accordance with the implementation plan and contains: • The scope of the HF V&V. • Major conclusions and their basis. • A description of the process for

Table 3.3-1

ITAAC For Human Factors Engineering

Design Commitment	Inspections, Tests, Analyses	Acceptance Criteria
		documenting and retaining the detailed HF V&V results. • A summary of the following activities: - Operational conditions used for the HF V&V. - HSI inventory and characterization. - HSI task support verification. - HFE design verification. - Integrated system validation. - Human Engineering Discrepancy resolution. The inspections, tests, analyses, and acceptance criteria for the Human Factors Engineering process address the ESBWR safety-related systems as defined in Table 2.2.10-1 and their associated safety-related functions.
10. Design Implementation is performed in accordance with the ESBWR HFE	An inspection is performed on the Design Implementation results summary	A results summary report(s) exists that concludes that the Design Implementation

Table 3.3-1

ITAAC For Human Factors Engineering

Design Commitment	Inspections, Tests, Analyses	Acceptance Criteria
Design Implementation Plan.	report(s).	activity was conducted in accordance with the implementation plan and contains: • The results of the final (as-built) HSI Verification concluding that the "As-Built" HSIs and their design characteristics correspond to the HSI Requirements and that Human Engineering Discrepancies (if any) resulting from non-conformance are resolved. • The results of the confirmation of the "As-Built" procedures and training design implementation concluding that Human Engineering Discrepancies resulting from adapted sections (if any) are resolved. • The results of the verification of HFE design not performed in the HF V&V concluding that items in the verification list meet verification criteria and Human Engineering Discrepancies (if any) resulting from non-conformance are resolved. • A description of the resolution to Human Engineering Discrepancies and

Table 3.3-1

ITAAC For Human Factors Engineering

Design Commitment	Inspections, Tests, Analyses	Acceptance Criteria
		Open issues in the issue tracking system (HFEITS). • A summary of turnover of remaining Human Engineering Discrepancies/HFEITS issues. The inspections, tests, analyses, and acceptance criteria for the Human Factors Engineering process address the ESBWR safety-related systems as defined in Table 2.2.10-1 and their associated safety-related functions.
11. The strategy for the Human Performance Monitoring (HPM) process is developed in accordance with the ESBWR HFE Human Performance Monitoring Implementation Plan.	An inspection is performed on the HPM results summary report(s).	A results summary report(s) exists that concludes that the HPM strategy was developed in accordance with the implementation plan and contains: • A description of the HPM strategy including the scope, structure, and provisions for specific cause determination, trending of performance degradation and failures, and corrective actions. • A description of the database to track activities and corrective actions.

Table 3.3-1

ITAAC For Human Factors Engineering

Design Commitment	Inspections, Tests, Analyses	Acceptance Criteria
		The inspections, tests, analyses, and acceptance criteria for the Human Factors Engineering process address the ESBWR safety-related systems as defined in Table 2.2.10-1 and their associated safety-related functions.

3.4 RADIATION PROTECTION

Design Description

The ESBWR Standard Plant is designed to maintain radiation exposures to plant personnel As Low As Reasonably Achievable (ALARA). Radiation protection is provided by application of the design and radiation control principles:

(1) Plant design provides for containment of airborne radioactive materials, and the ventilation system ensures that concentrations of airborne radionuclides are maintained at levels consistent with personnel access needs.

(2) Area radiation monitoring provides local alarms (visual alarms in high noise areas) with variable alarm setpoints and readout/alarm capability.

(3) The plant design provides radiation shielding for rooms, corridors and operating areas commensurate with their occupancy requirements.

Inspections, Tests, Analyses and Acceptance Criteria

Table 3.4-1 provides definitions of the inspections, test and/or analyses, together with associated acceptance criteria for ventilation and airborne monitoring and shielding.

Table 3.4-1

ITAAC For Radiation Protection

Design Commitment	Inspections, Tests, Analyses	Acceptance Criteria
1. Plant design provides for containment of airborne radioactive materials, and the ventilation system ensures that concentrations of airborne radionuclides are maintained at levels consistent with personnel access needs.	Expected concentrations of airborne radioactive material will be analyzed by radionuclide for normal plant operations, anticipated operational occurrences for each equipment cubicle, corridor, and operating area requiring personnel access. Calculations will consider: • Design ventilation flow rates for each area; • Typical leakage characteristics for equipment located in each area • A radiation source term in each fluid system will be determined based upon an assumed off gas rate of 3,700 MBq/second (30 minute decay) appropriately adjusted for radiological decay and buildup of activated corrosion and wear products.	Analyses resulsts for radioactive airborne concentration demonstrates that: • For normally occupied rooms and areas of the plant (i.e., those areas requiring routine access to operate and maintain the plant), equilibrium concentrations of airborne radionuclides will be a small fraction (10% or less) of the occupational concentration limits listed in 10 CFR 20 Appendix B. • For rooms that require infrequent access (such as for non-routine equipment maintenance), the ventilation system is capable of reducing radioactive airborne concentrations to (and maintaining them at or below) the occupational concentration limits listed in 10 CFR 20 Appendix B during the periods that occupancy is required. • For rooms that seldom require access, plant design provides containment and ventilation to reduce airborne contamination spread to other areas of lower contamination.

Table 3.4-1

ITAAC For Radiation Protection

Design Commitment	Inspections, Tests, Analyses	Acceptance Criteria
	• Testing of safety-related isolation dampers will be performed in accordance with IEEE-338 requirements.	• A test report documents that isolation dampers close within the designed time frame and limit leakage to a rate below the design assumed leakage rate. {{Design Acceptance Criteria}}
2. Area radiation monitoring provides local alarms (visual alarms in high noise areas) with variable alarm setpoints, and readout/alarm capability.	See Tier 1, Subsection 2.3.2.	See Tier 1, Subsection 2.3.2.
3. The plant design provides radiation shielding for rooms, corridors and operating areas commensurate with their occupancy requirements.	Analyses (with inspections) of the expected radiation levels in each plant area will verify the adequacy of the shielding designs.	Analysis/inspection report(s) demonstrate that the maximum expected radiation dose rates in each plant area (deep dose equivalent measured at 30 cm from the source of the radiation, not contact dose rates) are no greater than the dose rates specified for the following zones, based on the access requirements of that area for plant operation and maintenance. Zone / Dose Rate (mSv/hr) / Access Requirements A / ≤ 0.006 / Uncontrolled, unlimited access B / 0.006 ≤ 0.01 / Controlled and unlimited access

Table 3.4-1

ITAAC For Radiation Protection

Design Commitment	Inspections, Tests, Analyses	Acceptance Criteria		
		Zone	Dose Rate (mSv/hr)	Access Requirements
		C	0.01 ≤ 0.05	Controlled and limited access (20 hr/week)
		D	0.05 ≤ 0.25	Controlled and limited access (4 hr/week)
		E	0.25 ≤ 1	Controlled and limited access (1 hr/week)
		F	1 ≤ 10	Limited and controlled access with special authorization permit required
		G	10 ≤ 100	Same as Zone F
		H	100 ≤ 1000	Same as Zone F
		I	1000 ≤ 5000	Same as Zone F
		J	> 5000	Inaccessible during power and shutdown operations

3.5 INITIAL TEST PROGRAM

Design Description

The ESBWR Initial Test Program (ITP) is a program that will be conducted following completion of construction and construction-related inspections and tests and extends to commercial operation. The test program will be composed of preoperational and startup test phases. The general objective of the ITP is to confirm that performance of the as-built facility is in compliance with the design characteristics used for safety evaluations.

The preoperational test phase of the ITP will consist of those test activities conducted prior to fuel loading. Preoperational testing will be conducted to demonstrate proper performance of structures, systems, components, and design features in the assembled plant. Tests will include, as appropriate, logic and interlocks test, control and instrumentation functional tests, equipment functional tests, system operational test, and system vibration and expansion measurements.

The startup test phase of the ITP will begin with fuel loading and extends to commercial operation. The primary objective of the startup phase testing will be to confirm integrated plant performance with the nuclear fuel in the reactor pressure vessel and the plant at various power levels. Startup phase testing will be conducted at five test conditions during power ascension: open vessel, heatup, low power, mid-power, and high power. The following tests will be conducted during power operation testing:

(1) Core performance analysis,

(2) Steady-state testing,

(3) Control system tuning and demonstration, and

(4) System transient tests; and

(5) Major plant transients (including trips).

Testing during all phases of the ITP will be conducted using step-by-step written procedures to control the conduct of each test. Such test procedures will delineate established test methods and applicable acceptance criteria. The test procedures will be developed from preoperational and startup test specifications. Approved test procedures will be made available to the NRC approximately 60 days prior to their intended use for preoperational tests and 60 days prior to scheduled fuel loading for startup phase tests. The preoperational and startup test specifications will also be made available to the NRC. Administratively, the ITP will be controlled in accordance with a startup administrative manual. This manual will contain the administrative requirements that govern the conduct of test program, review, evaluation and approval of test results, and test records retention.

Inspections, Tests, Analyses and Acceptance Criteria

This section represents a commitment that combined operating license applicants referencing the certified design will implement an ITP that meets the objectives presented above. ITAAC, aimed at verification of ITP implementation, are neither necessary nor required.

3.6 DESIGN RELIABILITY ASSURANCE PROGRAM

Design Description

The GEH ESBWR Design Reliability Assurance Program (D-RAP) is used during detailed design and specific equipment selection phases to assure that the important ESBWR reliability assumptions of the probabilistic risk assessment (PRA) will be considered throughout the plant life. The PRA is used to evaluate plant responses to abnormal event initiations and the corresponding plant mitigation functions, to ensure potential plant damage scenarios pose a very low probability of risk to the public.

The objectives of the D-RAP are to provide reasonable assurance that risk significant SSCs are designed such that: (1) Assumptions from the risk analysis are utilized; (2) SSCs when challenged, function in accordance with the assumed reliability; (3) SSCs whose failure results in a reactor trip, function in accordance with the assumed reliability; and (4) Maintenance actions to achieve the assumed reliability are identified.

The scope of the ESBWR D-RAP includes risk-significant SSCs, both safety-related and nonsafety-related, that provide defense-in-depth or result in significant improvement in the PRA evaluations.

(1) The D-RAP provides reasonable assurance that the design of risk-significant SSCs is consistent with their risk analysis assumptions.

Inspections, Tests, Analyses, and Acceptance Criteria

Table 3.6-1 specifies the inspections, tests, analyses, and associated acceptance criteria for the D-RAP.

Table 3.6-1

ITAAC For Design Reliability Assurance Program

Design Commitment	Inspections, Tests, Analyses	Acceptance Criteria
1. The D-RAP provides reasonable assurance that the design of risk-significant SSCs is consistent with their risk analysis assumptions.	Inspection will be performed for the existence of a report which establishes the estimated reliability of as-built risk –significant SSCs.	Reports and/or specifications exist that contain the list of risk-significant SSCs and conclude that the estimated reliability of each as-built risk-significant SSC is consistent with the assumed reliability (e.g. the reliability assumed in the ESBWR PRA) and that industry experience including operations, maintenance, and monitoring activities were assessed in estimating the reliability of these SSCs.

3.7 POST ACCIDENT MONITORING INSTRUMENTATION

Design Description

The post accident monitoring instrumentation provides information required to monitor variables and systems over their anticipated ranges for post-accident conditions as appropriate to ensure adequate safety. This information may be safety-related or nonsafety-related.

The ESBWR Distributed Control and Information System (DCIS) provides the required signal paths to process this information. The ESBWR DCIS is subdivided into the safety-related DCIS (Q-DCIS) and the nonsafety-related DCIS (N-DCIS). For PAM instrumentation associated with critical safety functions and powered from safety-related sources the safety related Q-DCIS provides the required signal path to process this data. This information then is shown on Q-DCIS divisional safety-related displays. The safety-related information is also available to the N-DCIS through the qualified safety-related isolation devices for input to nonsafety-related displays, Plant Computer Functions (PCF), and the Alarm Management System (AMS). Type A, Type B, and Type C variables are powered from safety-related sources. Type D and Type E variables will have their power source determined as part of the design process.

For variables that are powered from nonsafety-related sources the N-DCIS provides the required signal paths to process this information. This information is used for input to nonsafety-related displays, plant computer functions, and the Alarm Management System.

There is a Human Factors Engineering defined process to determine the appropriate variables and types (A, B, C, D, or E). That is, the determination of the scope of instrumentation relied upon to fulfill the post-accident monitoring function is determined through the Human Factors Engineering process (see Section 3.3).

For each variable and type the process determines additional characteristics appropriate to that variable as outlined below:

<u>Performance criteria</u>

- Range
- Accuracy
- Response time
- Required instrument duration
- Reliability
- Performance assessment documentation

<u>Design criteria</u>

- Single failure
- Common cause failure
- Independence and separation
- Isolation
- Information ambiguity

- Power supply
- Calibration
- Testability
- Direct measurement
- Control of access
- Maintenance and repair
- Auxiliary supporting features
- Portable instruments
- Documentation of Design Criteria

Qualification criteria

- Type A variables
- Type B variables
- Type C variables
- Type D variables
- Type E variables
- Portable instruments
- Post Event operating time
- Documentation of qualification criteria

Display criteria

- Information characteristics
- Human factors
- Anomalous indications
- Continuous vs. on-demand display
- Trend or rate information
- Display identification
- Type of monitoring channel display
- Display location
- Information ambiguity
- Recording
- Digital display signal validation
- Display criteria documentation

PAM Instrumentation software is developed in accordance with the software development program described in Section 3.2.

Inspections, Tests, Analyses, and Acceptance Criteria

Table 3.7-1 specifies the inspections, tests, analyses, and associated acceptance criteria for post accident monitoring instrumentation.

Table 3.7-1

ITAAC For The Post Accident Monitoring Instrumentation

Design Commitment	Inspections, Tests, Analyses	Acceptance Criteria
1. The intalled post-accident monitoring instrumentation (scope as determined by the Human Factor Engineering process in Section 3.3) conforms with the requirements (variables, types, performance criteria, design criteria, qualification criteria, display criteria, and quality assurance) as described in Section 3.7.	Inspections tests and/or analysis will be performed to verify that the installed post-accident monitoring instrumentation conforms with the requirements as described in Section 3.7.	Report(s) exists and conclude(s) that the installed post accident monitoring instrumentation conforms with the requirements as described in Section 3.7.
2. PAM instrumentation software is developed in accordance with the software development program described in Section 3.2.	See Section 3.2.	See Section 3.2.

3.8 ENVIRONMENTAL QUALIFICATION OF MECHANICAL AND ELECTRICAL EQUIPMENT

The equipment qualification (EQ) program includes safety-related electrical and mechanical equipment located in harsh and mild environments. The electrical equipment identified in 10 CFR 50.49 as electric equipment important to safety covered by (b)(1), (b)(2), and (b)(3) are included in the equipment qualification program.

Regulatory Treatment of Non-Safety Systems (RTNSS) equipment located in harsh environments is also included in the EQ program.

The equipment in the EQ program is referred to as EQ equipment.

Design Description

(1) EQ electrical equipment located in a harsh environment can perform its safety-related function under normal, abnormal and design bases accident environmental conditions.

(2) EQ mechanical equipment located in a harsh environment can perform its safety-related function under normal, abnormal and design bases accident environmental conditions.

(3) EQ safety-related digital I&C equipment (including digital components in the safety-related electrical distribution system) located in a mild environment is designed to perform its safety-related function under normal and AOO environmental conditions.

Inspections, Tests, Analyses, and Acceptance Criteria

Table 3.8-1 specifies the equipment qualification inspections, test, analyses, and associated acceptance criteria for EQ mechanical and electrical equipment.

Table 3.8-1

ITAAC for Environmental Qualification of Mechanical and Electrical Equipment

Design Commitment	Inspections, Tests, Analyses	Acceptance Criteria
1. EQ electrical equipment, 10 CFR 50.49 (b)(1), (b)(2), and (b)(3) equipment, located in a harsh environment can perform its safety-related function under normal, abnormal and design bases accident environmental conditions.	EQ electrical equipment, 10 CFR 50.49 (b)(1), (b)(2), and (b)(3) equipment, located in a harsh environment is identified and:	
	i. Analysis will be performed to identify the environmental design bases including the definition of anticipated operational occurrences and normal, accident, and post-accident environments.	i. Reports document the analyses results identifying the environmental design bases including the definition of anticipated operational occurrences and normal, accident, and post-accident environments for EQ electrical equipment, 10 CFR 50.49 (b)(1), (b)(2), and (b)(3) equipment, located in a harsh environment.
	ii. Type tests, analyses, or a combination of type tests and analyses will be performed on as-built EQ electrical equipment, 10 CFR 50.49 (b)(1), (b)(2), and (b)(3) equipment, identified as located in a harsh environment.	ii. Reports exist and conclude that the as-built EQ equipment, 10 CFR 50.49 (b)(1), (b)(2), and (b)(3) equipment, identified in the analyses as being qualified for a harsh environment can withstand the environmental conditions that would exist before, during, and following a design basis accident without loss of safety function for the time required to perform the safety function.

Table 3.8-1

ITAAC for Environmental Qualification of Mechanical and Electrical Equipment

Design Commitment	Inspections, Tests, Analyses	Acceptance Criteria
	iii. Inspection will be performed of the as-installed EQ electrical equipment, 10 CFR 50.49 (b)(1), (b)(2), and (b)(3) equipment, and the associated wiring, cables, and terminations located in a harsh environment.	iii. Reports exist and conclude that the as-installed EQ electrical equipment, 10 CFR 50.49 (b)(1), (b)(2), and (b)(3) equipment, and the associated wiring, cables, and terminations identified in the analyses as being qualified for a harsh environment are bounded by type tests, analyses, or a combination of type tests and analyses.
2. EQ mechanical equipment located in a harsh environment can perform its safety-related function under normal, abnormal and design bases accident environmental conditions.	EQ mechanical equipment located in a harsh environment is identified and: i. Analysis will be performed to identify the environmental design bases including the definition of anticipated operational occurrences and normal, accident, and post-accident environments.	i. Reports document the analyses results identifying the environmental design bases including the definition of anticipated operational occurrences and normal, accident, and post-accident environments for the EQ mechanical equipment located in a harsh environment.

Table 3.8-1

ITAAC for Environmental Qualification of Mechanical and Electrical Equipment

Design Commitment	Inspections, Tests, Analyses	Acceptance Criteria
	ii. Type tests and/or analyses of material data will be performed on EQ mechanical equipment identified as located in a harsh environment.	ii. Reports exists and concludes that the material data ensure that the as-built EQ mechanical equipment identified in the type tests and/or analyses as qualified for a harsh environment can withstand the environmental conditions that would exist before, during, and following a design basis accident without loss of safety function for the time required to perform the safety function.
	iii. Inspection will be performed to verify proper non-metallic materials of the as-installed EQ mechanical equipment located in a harsh environment.	iii. Reports exist and conclude that all non-metallic materials of EQ mechanical equipment has been installed per the qualification requirements.

Table 3.8-1

ITAAC for Environmental Qualification of Mechanical and Electrical Equipment

Design Commitment	Inspections, Tests, Analyses	Acceptance Criteria
3. EQ safety-related digital I&C equipment (including digital components in the safety-related electrical distribution system) located in a mild environment is designed to perform its safety-related function under normal and AOO environmental conditions.	EQ safety-related digital I&C equipment (including digital components in the safety-related electrical distribution system) located in a mild environment is identified and: i. Analysis will be performed to identify the environmental design bases including the definition of anticipated operational occurrences and normal environments.	i. Report(s) document the analyses results identifying the environmental design bases including the definition of anticipated operational occurrences and normal environments for EQ digital I&C equipment (including digital components in the safety-related electrical distribution system) located in a mild environment:
	ii. Type tests, analyses, or a combination of type tests and analyses will be performed on EQ digital I&C equipment located in a mild environment.	ii. Report(s) exist and conclude that all EQ digital I&C equipment (including digital components in the safety-related electrical distribution system) located in a mild environment is qualified to perform its safety function during the applicable normal and abnormal environmental conditions by type tests, analyses, or a combination of type tests and analyses for the time required to perform the safety function.

Table 3.8-1

ITAAC for Environmental Qualification of Mechanical and Electrical Equipment

Design Commitment	Inspections, Tests, Analyses	Acceptance Criteria
	iii. Inspection will be performed to verify the as-installed EQ digital I&C equipment located in a mild environment	iii. Reports exist and conclude that all EQ digital I&C equipment located in a mild environment has been installed per the qualification requirements.

4. INTERFACE MATERIAL

An applicant for a combined license (COL) that references the ESBWR certified design must provide design features or characteristics that comply with the interface requirements for the plant design and inspections, tests, analyses, and acceptance criteria (ITAAC) for the site-specific portion of the facility design, in accordance with 10 CFR 52.79 (c).

Tier 1 interfaces were identified for the conceptual design portion of the Plant Service Water System for the certified design.

4.1 PLANT SERVICE WATER SYSTEM

Design Description

The Plant Service Water System (PSWS) is the heat sink for the Reactor Component Cooling Water System. PSWS does not perform any safety-related function. There is no interface with any safety-related component.

The PSWS cooling towers and basins are not within the scope of the certified design. A specific design for this portion of the PSWS shall be selected for any facility, which has adopted the certified design. The plant-specific portion of the PSWS shall meet the interface requirements defined below.

Interface Requirements

The interface requirements are necessary for supporting the post-72-hour cooling function of the PSWS. The PSWS is required to remove 2.02×10^7 MJ (1.92×10^{10} BTU) over a period of 7 days without active makeup. Consequently, verification of compliance with the interface requirements shall be achieved by inspections, tests, and analyses that are similar to those provided for the certified design. The combined license applicant referencing the certified design shall develop these inspections, tests, and analyses, together with their associated acceptance criteria.

5. SITE PARAMETERS

5.1 SCOPE AND PURPOSE

The intent of this section is to provide Tier 1 material that complies with the 10 CFR 52 requirements to define the site parameters postulated for the ESBWR certified design.

Assuming the certified design will be referenced for a wide range of sites, it is necessary to specify a set of site parameters enveloping the conditions that could occur at most potential power plant sites in the United States. These parameters are provided in Table 5.1-1. It is intended that any facility that references the certified design will utilize a site where the actual site-specific conditions are within the defined envelope.

In the case of seismic design and soil parameters, deviations from the defined conditions may be justified by site-specific soil-structure interaction analyses. The results may be used to confirm the seismic design adequacy of the certified design using approved methods and acceptance criteria.

Table 5.1-1

Envelope of ESBWR Standard Plant Site Parameters (1)

Maximum Ground Water Level:	0.61 m (2 ft) below plant grade	
Extreme Wind:	**Seismic Category I and II Structures** - 100-year Wind Speed (3-sec gust): - Exposure Category: **Non-Seismic Standard Plant Structures** - 50-year Wind Speed (3-sec gust):	 67.1 m/s (150 mph) D 58.1 m/s (130 mph)
Maximum Flood (or Tsunami) Level:	0.3 m (1 ft) below plant grade	
Tornado:	- Maximum Tornado Wind Speed: - Maximum Rotational Speed: - Translational Speed: - Radius: - Pressure Drop: - Rate of Pressure Drop: - Missile Spectrum:	147.5 m/s (330 mph) 116.2 m/s (260 mph) 31.3 m/s (70 mph) 45.7 m (150 ft) 16.6 kPa (2.4 psi) 11.7 kPa/s (1.7 psi/s) Spectrum I of SRP 3.5.1.4, Rev 2 applied to full building height.
Precipitation (for Roof Design):	- Maximum Rainfall Rate: - Maximum Short Term Rate: - Maximum Roof Load: - Maximum Ground Snow Load (100-year recurrence interval): - Maximum 48-hr Winter Rainfall:	49.3 cm/hr (19.4 in/hr) 15.7 cm (6.2 in) in 5 minutes 2873 Pa (60 lbf/ft^2) 2394 Pa (50 lb/ft^2) 91.4 cm (36 in)
Ambient Design Temperature:	**2% Annual Exceedance Values** - Maximum: 35.6°C (96°F) dry bulb 26.1°C (79°F) wet bulb (mean coincident) 27.2°C (81°F) wet bulb (non-coincident) - Minimum: -23.3°C (-10°F) **1% Annual Exceedance Values** - Maximum: 37.8°C (100°F) dry bulb 26.1°C (79°F) wet bulb (mean coincident) 27.8°C (82°F) wet bulb (non-coincident) - Minimum: -23.3°C (-10°F) **0% Exceedance Values** - Maximum: 47.2°C (117°F) dry bulb 26.7°C (80°F) wet bulb (mean coincident) 31.1°C (88°F) wet bulb (non-coincident) - Minimum: -40°C (-40°F)	

Table 5.1-1
Envelope of ESBWR Standard Plant Site Parameters (continued)

Soil Properties:	- Minimum Static Bearing Capacity:(2)	
	Reactor/Fuel Building:	699 kPa (14,600 lbf/ft^2)
	Control Building:	292 kPa (6,100 lbf/ft^2)
	Fire Water Service Complex:	165 kPa (3,450 lbf/ft^2)
	- Minimum Dynamic Bearing Capacity: (2)	
	Reactor/Fuel Building:	
	Soft:	2700 kPa (56,400 lbf/ft^2)
	Medium:	7300 kPa (152,500 lbf/ft^2)
	Hard:	5400 kPa (112,800 lbf/ft^2)
	Control Building:	
	Soft:	2800 kPa (58,500 lbf/ft^2)
	Medium:	2500 kPa (52,300 lbf/ft^2)
	Hard:	2400 kPa (50,200 lbf/ft^2)
	Firewater Service Complex (FWSC):	
	Soft:	440 kPa (9,200 lbf/ft^2)
	Medium:	540 kPa (11,300 lbf/ft^2)
	Hard:	670 kPa (14,000 lbf/ft^2)
	- Minimum Shear Wave Velocity: (3)	300 m/s (1000 ft/s)
	- Liquefaction Potential:	
	Seismic Category I Structures	None under footprint of Seismic Category I structures resulting from site-specific SSE.
	- Angle of Internal Friction	≥ 30 degrees
Seismology:	- SSE Horizontal Ground Response Spectra: (4)	See Figure 5.1-1
	- SSE Vertical Ground Response Spectra: (4)	See Figure 5.1-2
Hazards in Site Vicinity:	- Site Proximity Missiles and Aircraft:	< about 10^{-7} per year
	- Volcanic Activity:	None
	- Toxic Gases:	None *
* Maximum toxic gas concentrations at the Main Control Room (MCR) HVAC intakes:	< toxicity limits	
Required Stability of Slopes:	- Factor of safety for static (non-seismic) loading	1.5
	- Factor of safety for dynamic (seismic) loading due to site-specific SSE	1.1
Maximum Settlement Values for Seismic Category I Buildings (5)		
Maximum Settlement at any corner of basemat	-Under Reactor/Fuel Buidling	103 mm (4.0 inches)
	-Under Control Building	18 mm (0.7 inches)
	-Under FWSC Structure	17 mm (0.7 inches)

Table 5.1-1
Envelope of ESBWR Standard Plant Site Parameters (continued)

Maximum Settlement Values for Seismic Category I Buildings (continuted)		
Average Settlement at four corners of basemat	-Under Reactor/Fuel Buidling	65 mm (2.6 inches)
	-Under Control Building	12 mm (0.5 inches)
	-Under FWSC Structure	10 mm (0.4 inches)
Maximum Differential Settlement along the longest mat foundation dimension	-within Reactor/Fuel Building	77 mm (3.0 inches)
	-within Reactor/Fuel Buidling	14 mm (0.6 inches)
	-Under FWSC Structure	12 mm (0.5 inches)
Maximum Differential Displacement between Reactor/Fuel Buildings and Control Building		85 mm (3.3 inches)

Table 5.1-1
Envelope of ESBWR Standard Plant Site Parameters (continued)

Meteorological Dispersion (X/Q):	EAB X/Q:		
	0-2 hours:	2.00E-03 s/m^3	
	LPZ X/Q:		
	0-8 hours:	1.90E-04 s/m^3	
	8-24 hours:	1.40E-04 s/m^3	
	1-4 days:	7.50E-05 s/m^3	
	4-30 days:	3.00E-05 s/m^3	
* First value is for unfiltered inleakage. Second value is for air intakes (emergency and normal)	Control Room X/Q: *		
	Reactor Building		
	0-2 hours:	1.90E-03 s/m^3	1.50E-03 s/m^3
	2-8 hours:	1.30E-03 s/m^3	1.10E-03 s/m^3
	8-24 hours:	5.90E-04 s/m^3	5.00E-04 s/m^3
	1-4 days:	5.00E-04 s/m^3	4.20E-04 s/m^3
	4-30 days:	4.40E-04 s/m^3	3.80E-04 s/m^3
	Passive Containment Cooling System / Reactor Building Roof		
	0-2 hours:	3.40E-03 s/m^3	3.00E-03 s/m^3
	2-8 hours:	2.70E-03 s/m^3	2.50E-03 s/m^3
	8-24 hours:	1.40E-03 s/m^3	1.20E-03 s/m^3
	1-4 days:	1.10E-03 s/m^3	9.00E-04 s/m^3
	4-30 days:	7.90E-04 s/m^3	7.00E-04 s/m^3
	Blowout Panels/Reactor Building Roof		
	0-2 hours:	7.00E-03 s/m^3	5.90E-03 s/m^3
	2-8 hours:	5.00E-03 s/m^3	4.70E-03 s/m^3
	8-24 hours:	2.10E-03 s/m^3	1.50E-03 s/m^3
	1-4 days:	1.70E-03 s/m^3	1.10E-03 s/m^3
	4-30 days:	1.50E-03 s/m^3	1.00E-03 s/m^3
	Turbine Building		
	0-2 hours:	1.20E-03 s/m^3	1.20E-03 s/m^3
	2-8 hours:	9.80E-04 s/m^3	9.80E-04 s/m^3
	8-24 hours:	3.90E-04 s/m^3	3.90E-04 s/m^3
	1-4 days:	3.80E-04 s/m^3	3.80E-04 s/m^3
	4-30 days:	3.20E-04 s/m^3	3.20E-04 s/m^3
	Fuel Building		
	0-2 hours:	2.80E-03 s/m^3	2.80E-03 s/m^3
	2-8 hours:	2.50E-03 s/m^3	2.50E-03 s/m^3
	8-24 hours:	1.25E-03 s/m^3	1.25E-03 s/m^3
	1-4 days:	1.10E-03 s/m^3	1.10E-03 s/m^3
	4-30 days:	1.00E-03 s/m^3	1.00E-03 s/m^3

Table 5.1-1
Envelope of ESBWR Standard Plant Site Parameters (continued)

Meteorological Dispersion (X/Q): (continued)	Technical Support Center X/Q:*		
	Reactor Building		
	0-2 hours:	1.00E-03 s/m^3	1.00E-03 s/m^3
	2-8 hours:	6.00E-04 s/m^3	6.00E-04 s/m^3
	8-24 hours:	3.00E-04 s/m^3	3.00E-04 s/m^3
	1-4 days:	2.00E-04 s/m^3	2.00E-04 s/m^3
	4-30 days:	1.00E-04 s/m^3	1.00E-04 s/m^3
	Turbine Building		
	0-2 hours:	2.00E-03 s/m^3	2.00E-03 s/m^3
	2-8 hours:	1.50E-03 s/m^3	1.50E-03 s/m^3
	8-24 hours:	8.00E-04 s/m^3	8.00E-04 s/m^3
	1-4 days:	6.00E-04 s/m^3	6.00E-04 s/m^3
	4-30 days:	5.00E-04 s/m^3	5.00E-04 s/m^3
	Passive Containment Cooling System / Reactor Building Roof		
	0-2 hours:	2.00E-03 s/m^3	2.00E-03 s/m^3
	2-8 hours:	1.10E-03 s/m^3	1.10E-03 s/m^3
	8-24 hours:	5.00E-04 s/m^3	5.00E-04 s/m^3
	1-4 days:	4.00E-04 s/m^3	4.00E-04 s/m^3
	4-30 days:	3.00E-04 s/m^3	3.00E-04 s/m^3

Notes:

(1) The design of the Radwaste Building uses a set of design parameters that are specified in Regulatory Guide 1.143, Table 2, Class RW-IIa instead of the corresponding values given in this table for all parameters except as follows: (1) Tornado: Wind Speeds, Radius, Pressure Drop, and Rate of Pressure Drop; (2) Seismology: Horizontal and Vertical Ground Spectra: See Figures 5.1-1 and 5.1-2.

(2) At foundation level of Seismic Category I structures. For minimum dynamic bearing capacity site-specific application, use the larger value or a linearly interpolated value of the applicable range of shear wave velocities at the foundation level. The shear wave velocities of soft, medium and hard soils are 300 m/sec (1000 ft/sec), 800 m/sec (2600 ft/sec) and greater than or equal to 1700 m/sec (5600 ft/sec), respectively.

(3) This is the equivalent uniform shear wave velocity (Veq) over the entire soil column at seismic strain, which is a lower bound value after taking into account uncertainties. Veq is calculated to achieve the same wave traveling time over the depth equal to the embedment depth plus 2 times the largest foundation plan dimension below the foundation as follows:

$$V_{eq} = \frac{\sum d_i}{\sum \frac{d_i}{V_i}}$$

where d_i and V_i are the depth and shear wave velocity, respectively, of the ith layer. The ratio of the largest to the smallest shear wave velocity over the mat foundation width at the foundation level does not exceed 1.7.

(4) Safe Shutdown Earthquake (SSE) design ground response spectra of 5% damping, also termed Certified Seismic Design Response Spectra (CSDRS), are defined as free-field outcrop spectra at the foundation level (bottom of the base slab) of the Reactor/Fuel and Control Building structures. For ground surface founded Firewater Service Complex structures, the CSDRS is 1.35 times the values shown in Figures 5.1-1 and 5.1-2 .

(5) Settlement values are long-term (post construction) values except for differential settlement within the foundation mat. The design of the foundation mat accommodates immediate and long-term (post construction) differential settlements after the installation of the basemat.

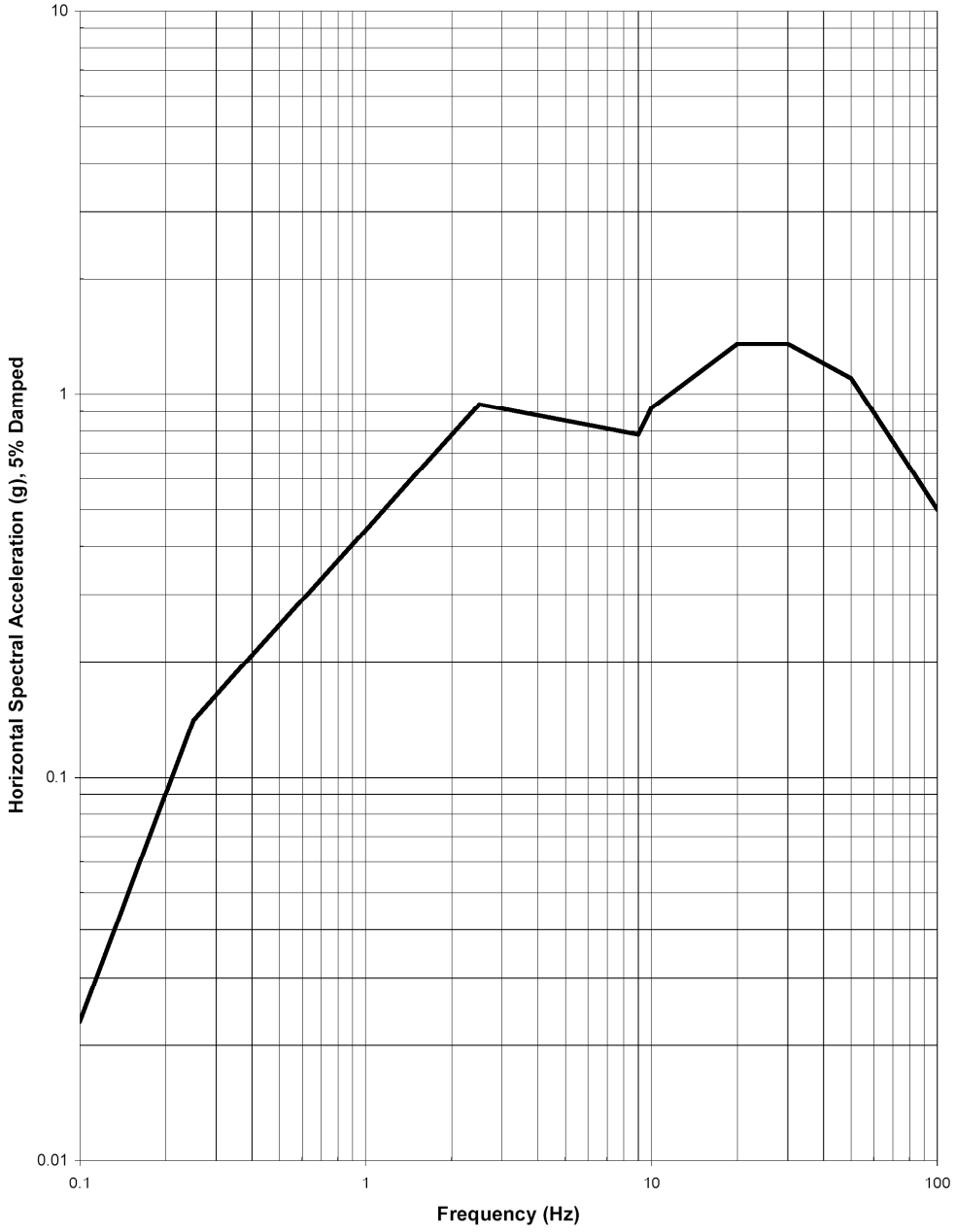

Figure 5.1-1. ESBWR Horizontal SSE Design Ground Spectra at Foundation Level

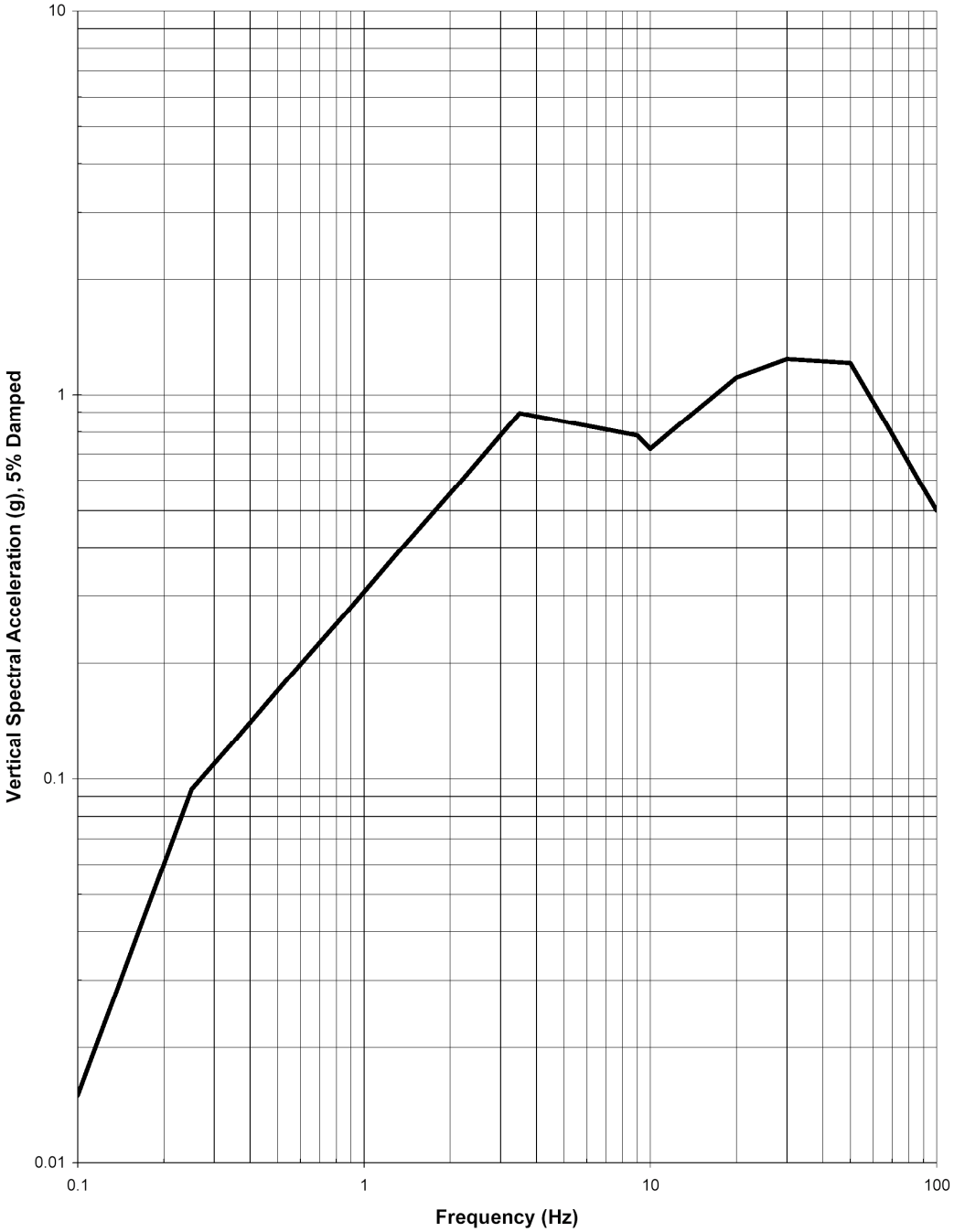

Figure 5.1-2. ESBWR Vertical SSE Design Ground Response Spectra at Foundation Level