UNITED STATES
NUCLEAR REGULATORY COMMISSION
ADVISORY COMMITTEE ON REACTOR SAFEGUARDS
WASHINGTON, D.C. 20555-0001

September 4, 2001

MEMORANDUM TO: Dr. Mario Bonaca, Chairman
Plant License Renewal Subcommittee

Noel Dudley FOR

FROM: Robert B. Elliott, Acting Senior Staff Engineer
ACRS

SUBJECT: CERTIFICATION OF THE SUMMARY/MINUTES OF THE ACRS SUBCOMMITTEE ON PLANT LICENSE RENEWAL MEETING REGARDING THE LICENSE RENEWAL GUIDANCE DOCUMENTS AND SELECTED BOILING WATER REACTOR VESSELS AND INTERNALS PROJECT TOPICAL REPORTS, MARCH 27, 2001 - ROCKVILLE, MARYLAND

The minutes of the subject meeting, issued on July 19, 2001, have been certified as the official record of the proceedings of that meeting. A copy of the certified minutes is attached.

Attachment: As stated

cc: ACRS Members
ACRS Secretary
Operations Support Branch (3 copies)

cc via e-mail:
J. Larkins
S. Bahadur
E. Barnard
ACRS Fellows and Technical Staff

UNITED STATES
NUCLEAR REGULATORY COMMISSION
ADVISORY COMMITTEE ON NUCLEAR WASTE
WASHINGTON, D.C. 20555-0001

MEMORANDUM TO: Robert B. Elliott, Acting Senior Staff Engineer
ACRS

FROM: Dr. Mario Bonaca, Chairman
Plant License Renewal Subcommittee

SUBJECT: CERTIFICATION OF THE MINUTES OF THE ACRS SUBCOMMITTEE ON PLANT LICENSE RENEWAL MEETING REGARDING THE LICENSE RENEWAL GUIDANCE DOCUMENTS AND SELECTED BOILING WATER REACTOR VESSELS AND INTERNALS PROJECT TOPICAL REPORTS, MARCH 27, 2001 - ROCKVILLE, MARYLAND

I hereby certify that, to the best of my knowledge and belief, the minutes of the subject meeting issued on July 19, 2001, are an accurate record of the proceedings for the meeting.

Mario V. Bonaca
Dr. Mario Bonaca, Chairman
Plant License Renewal Subcommittee

9/4/01
Date

UNITED STATES
NUCLEAR REGULATORY COMMISSION
ADVISORY COMMITTEE ON NUCLEAR WASTE
WASHINGTON, D.C. 20555-0001

July 19, 2001

MEMORANDUM TO: Dr. Mario Bonaca, Chairman
Plant License Renewal Subcommittee

FROM: Robert B. Elliott, Acting Senior Staff Engineer
ACRS

SUBJECT: WORKING COPY OF THE MINUTES OF THE ACRS SUBCOMMITTEE ON PLANT LICENSE RENEWAL MEETING REGARDING THE LICENSE RENEWAL GUIDANCE DOCUMENTS AND SELECTED BOILING WATER REACTOR VESSELS AND INTERNALS PROJECT TOPICAL REPORTS, MARCH 27, 2001 - ROCKVILLE, MARYLAND

A working copy of the minutes for the subject meeting is attached for your review. I would appreciate your review and comment as soon as possible. Copies are being sent to the Plant License Renewal Subcommittee members for information and/or review.

Attachment: As stated

cc: J. Barton
F. P. Ford
T. Kress
G. Lietch
W. Shack
R. Uhrig

cc via e-mail:
J. Larkins
S. Bahadur
S. Duraiswamy

ML012000427

ML 012470278

CERTIFIED

Issued: July 19, 2001
CERTIFIED: September 4, 2001

ADVISORY COMMITTEE ON REACTOR SAFEGUARDS
MINUTES OF ACRS SUBCOMMITTEE MEETING ON
PLANT LICENSE RENEWAL
MARCH 27, 2001
ROCKVILLE, MARYLAND

The ACRS Subcommittee on Plant License Renewal held a meeting on March 27, 2001, at 11545 Rockville Pike, Rockville, Maryland, in Room T-2 B3. The purpose of the meeting was to hold discussions with representatives of the NRC staff and industry concerning the final drafts of the Standard Review Plan for License Renewal (SRP-LR); the "Generic Aging Lessons Learned (GALL) Report;" Regulatory Guide (RG) 1.188, "Standard Format and Content for Applications to Renew Nuclear Power Plant Operating Licenses;" NEI 95-10, Revision 3, "Industry Guideline for Implementing the Requirements of 10 CFR Part 54, the License Renewal Rule;" and selected Boiling Water Reactor Vessels and Internals Project (BWRVIP) topical reports associated with license renewal. Mr. Sam Duraiswamy and Mr. Robert Elliott were the cognizant ACRS staff engineers for this meeting. The meeting was convened at 8:30 a.m. on March 27, 2001, and adjourned at 4:15 p.m. on the same day.

ATTENDEES:

ACRS

M. Bonaca, Chairman
F. P. Ford, Member
T. Kress, Member
J. Barton, Consultant
R. Elliott, ACRS Staff
G. Lietch, Member
W. Shack, Member
R. Uhrig, Member
S. Duraiswamy, ACRS Staff

NRC STAFF

C. Grimes, NRR
S. Lee, NRR
S. K. Mitra, NRR
E. Kleeh, NRR
D. Solorio, NRR
S. Koenick, NRR
J. Dozier, NRR
P. Kang, NRR
K. Rico, NRR
G. Carpenter, NRR

INDUSTRY PARTICIPANTS

D. Walters, Nuclear Energy Institute
R. Dyle, BWRVIP

There were no written comments or requests for time to make oral statements received from members of the public. Approximately seven members of the public attended the meeting. A list of meeting attendees is available in the ACRS office files.

ACRS SUBCOMMITTEE CHAIRMAN'S INTRODUCTION

Dr. Mario Bonaca, Chairman of the Plant License Renewal Subcommittee, convened the meeting at 8:30 a.m. on March 27 2001. He stated that the purpose of the meeting was to review the final drafts of the SRP-LR; the GALL Report, RG 1.188; NEI 95-10, Revision 3; and selected BWRVIP topical reports associated with license renewal. He called upon Mr. Christopher Grimes to begin.

NRC STAFF PRESENTATIONS

Introduction - Mr. Christopher Grimes, License Renewal and Standardization Branch, NRR

Mr. Christopher Grimes, Office of Nuclear Reactor Regulation (NRR), outlined the information the staff planned to present to the Subcommittee, noting that the staff would focus on the resolution of public comments on the improved license renewal guidance documents. Mr. Grimes briefly discussed the history of the license renewal guidance documents, stating that the staff began its review of license renewal applications for Calvert Cliffs and Oconee with only draft guidance documents (i.e., an industry guide and a standard review plan) that were untested and provided a different process for staff review of a licensing action. Through these efforts, substantial lessons were learned that could facilitate the license renewal process. During the course of the first two reviews, the industry raised an issue related to credit for existing programs. This issue is described in a Commission paper, SECY-99-148. As a result of this issue and lessons learned from the Calvert Cliffs and Oconee reviews, the staff began to develop improved license renewal guidance primarily in the form of the Generic Aging Lessons Learned (GALL) report, a catalog of effective aging management program attributes. The focus of the staff's efforts was to achieve predictability and stability in license renewal reviews, and to facilitate the staff's ability to handle the anticipated high license renewal workload.

Introduction and Overview - Dr. Sam Lee, License Renewal and Standardization Branch, NRR

Dr. Lee stated that the improved license renewal documents consist of NUREG-1801 (the GALL Report), NUREG-1800 (the SRP-LR), RG 1.188, and Nuclear Energy Institute (NEI) Industry Guidance document 95-10, Revision 3. He noted that the GALL Report provides an evaluation of aging management programs and that RG 1.188 endorses NEI 95-10 guidance for applicants in preparing their license renewal applications. Dr. Lee indicated that the staff plans to submit these documents for Commission approval by the end of the April 2001. He stated that the staff presentations would discuss the changes to these documents resulting from the resolution of public comments.

He noted that the August 2000 version of the GALL Report had a double-sided (two page) tabular format that was not considered user friendly. As a result, the format was streamlined into a single page tabular format. The program evaluations were moved to Chapter XI of the GALL Report.

Five items are scheduled for further discussion between the staff and NEI after the issuance of these documents. Any additional guidance clarification resulting from the dialogue between the staff and NEI will be incorporated into future updates of the guidance documents. In addition, any new technical information and/or operating experience obtained, or lessons learned in future application reviews will be incorporated into future updates of these documents.

Dr. Lee also indicated that the staff would be working with NEI on a guidance document demonstration project. NEI is preparing sample portions of an application and plans to submit

them for staff review and comment by the end of the April 2001.

In response to a question from the Subcommittee, Mr. Grimes provided further information on the five discussion items. Specifically, he stated that these issues evolved from industry comments that were somewhat controversial. Rather than appeal these issues, the industry requested that they be afforded an opportunity to continue a dialogue on these subjects, with an expectation that improved guidance or positions could be developed for future changes to the guidance documents. Dr. Bonaca noted that complex assemblies was a significant issue for the Edwin I. Hatch Nuclear Plant license renewal application and asked if they should be part of the ongoing dialogue items. Mr. Grimes responded that although there are some details to be worked on, he believes that the complex assembly issue can be resolved for Hatch, and that the issue has been adequately addressed on a generic basis.

Overview of Public Comments - Mr. Steve Koenick, License Renewal and Standardization Branch, NRR

Mr. Koenick gave a brief overview of the public comments. He stated that the four documents (cited above) were issued on August 31, 2000 (in Federal Register Notice 65 FR53047). This was followed by a public workshop with over 100 participants. The analysis of the public comments is documented in the draft NUREG-1739, "Analysis of Public Comments on the Improved License Renewal Guidance Documents," dated March 1, 2001. Over 1,000 comments were received. The bulk of the comments were from the nuclear industry, with the majority of those from NEI. Over 100 comments were from individuals. The majority of these comments were related to nuclear power in general and the license renewal process. Mr. Koenick closed by stating that the remainder of the comments are described in NUREG-1739.

Changes to the SRP-LR: Scoping and Screening Methodology - Mr. S.K. Mitra, License Renewal and Standardization Branch, NRR

Mr. S.K. Mitra discussed the changes in the guidance in Chapter II of the SRP-LR related to scoping resulting industry comments. Mr. Mitra stated discussed the following changes that were made to Chapter II of SRP-LR to address public comments:

- Severe accident management guidelines (SAMGs) were incorporated to the list of source documents that could be considered when performing a scoping evaluation. This change was in response to an ACRS report to the Commission dated November 15, 2000.

- The focus of the scoping review was clarified in response to comments from the industry. The industry pointed out that 10 CFR 54.21 only requires an application to include the list of structures, systems and components (SSCs) that are subject to aging management review (AMR). The SRP-LR previously required a list of the SSCs that are within the scope of license renewal. Accordingly, the SRP-LR was changed to indicate that a license renewal application is only required to include a description of the scoping and screening methodology and the list of SSCs subject to an AMR. The staff will verify the adequacy of the scoping results through sampling SSCs identified in plant drawings,

the plant Final Safety Analysis Report (FSAR) and other appropriate plant documents, and through inspection of the applicant's documentation. During the inspection, the applicant's list of SSCs that are within the scope of license renewal will be available for the inspectors to review.

- The independent plant examination (IPE) and the independent plant examination for external events (IPEEE) were added as potential source documents to consider for scoping. Since license renewal rule is deterministic and not probabilistic, the industry commented that probabilistic techniques have very limited use for license renewal scoping. The staff agrees that license renewal rule is deterministic, but also believes that the IPE and IPEEE provide useful insights for the current licensing basis (CLB). The dialogue with the industry on this issue is ongoing. Mr. Grimes expanded on this item by stating that the standard review plan provides reviewers with source material that can be utilized in testing the applicant's scoping and screening results. SAMGs, IPEs, and IPEEEs provide the staff with powerful tools investigate the CLB and determine the extent to which there may be SSCs important to safety that are not part of the current licensing basis. He believes that the industry's concern is that further guidance in the standard review plan is needed to explain how to use these documents. The industry does not want the staff to be challenging the CLB to be more risk-informed with no explanation of the process by which risk-informed changes to the CLB should be made. The staff believes that the current guidance is reasonable, in terms of the importance of the focus on maintaining a CLB and simply selecting from that those SSCs that need to be considered for aging management reviews. The staff will continue the dialogue in this area.

In response to a question from the Subcommittee, the staff noted that the License Renewal Rule established that an application need only provide the results of the process. The reason for this is that the rule has a process-oriented focus for scoping and screening activities, and the applicant is only required to produce the results. During the methodology review and the scoping inspection, the staff will have the opportunity to review the applicant's documentation identifying SSCs that were originally considered within scope and then excluded during the screening process. The staff's safety evaluation report includes explanations of the staff's findings, how they tested the applicant's results, and the basis for their conclusion. Since the reviewer is testing the applicant's results, the basis for the staff's conclusion of acceptability is that the staff did not identify SSCs that were omitted, and therefore, there is reasonable assurance that the results are complete. A new construct for the rule that would present the front-end of the process could be considered; however, the staff believes that this would detract from the process orientation of the rule. Chairman Bonaca noted that the rule is written in a few pages while the guidance is covered in thousands of pages. There is a significant amount of supporting documentation for the processes that are required by the rule. Although during an inspection, the staff may have access to a full listing of SSCs within scope, and this makes the application very scrutable for the staff, it does not facilitate review of the application by an interested member of the public, or even the ACRS. Chairman Bonaca stated that in reviewing the Hatch application, he was troubled by the fact that it was hard to follow the process. He believes that the applications should be much more scrutable than that.

Changes to the GALL Report, Chapters II and III - Mr. Peter Kang, License Renewal and Standardization Branch, NRR

Mr. Kang discussed the changes made to the GALL Report, Chapters II and III. These chapters deal with containment structures and structure/component supports. Specifically, he discussed the four most important changes resulting from the public comments received on these chapters.

The first change relates to managing aging effects of concrete and steel in inaccessible areas. In its previous version, the GALL report required plant-specific aging management programs for inaccessible areas. Industry noted that this requirement exceeds the requirements of 10 CFR 50.55A, which states that, "the licensee shall evaluate the acceptability of inaccessible areas when conditions exist in accessible areas that could indicate the presence of or result in degradation to such inaccessible areas." Accordingly, the latest version of the GALL Report was revised to include specific criteria for managing the aging effects of concrete and steel for inaccessible areas. The GALL Report now includes four specific sets of criteria for determining if aging management of inaccessible concrete or steel is required. If an applicant cannot meet these four criteria, then a plant-specific aging management program must be developed to address each of the criteria.

The second major change relates to managing loss of containment steel element material due to corrosion. In the previous version of the GALL Report, three programs were combined together to manage this aging effect. These programs are: 1) inservice inspection (ISI) of containment steel elements in accordance with Section XI of the ASME Boiler and Pressure Vessel Code, Subsection IWE, 2) the applicant's 10 CFR 50, Appendix J program, and 3) the applicant's coatings program. Industry commented that the Appendix J and the coating programs should be deleted from the GALL Report because the ISI program alone should be acceptable as a stand-alone program. The staff did not agree; however, they did recognize that the coatings program is only required if the applicant is taking credit for it to manage the loss of material due to corrosion during the current license term. On that basis, a statement was added to the GALL report indicating that the coating program is required for the extended period of operation only if it is being credited during the current operating term.

In response to a question from the Subcommittee, the staff clarified that this program only applies to the interior of the containment. However, the requirements of Subsection IWE include inspections of the accessible exterior portions of the containment. Subsection IWE, as invoked by 10 CFR 50.55A, requires an evaluation of inaccessible areas if there is reason to believe that degradation of inaccessible areas is occurring. This evaluation is performed during the current operating period on the basis of accessible area evaluations. For license renewal, the applicant must evaluate if the environmental conditions would cause corrosion.

The third major change relates to managing stress corrosion cracking and crevice corrosion for stainless steel for stainless steel spent fuel pool liner. The GALL report was revised to allow a combination of water chemistry and spent fuel pool level monitoring programs to be used to manage this aging effect. Previously, the GALL Report had required a leakage detection system.

The final change discussed by Mr. Kang related to cracking of metal component support members due to vibratory loads and the cyclic loading. Industry representatives commented that this is not a license renewal item and should be deleted from the GALL Report. In their comment, they pointed out that vibrations characteristically cause cracking in a short period of time (e.g., on order of hours or days of operation). Failures would occur early in the plant life. As a result, cracking will be identified and corrected long before the period of extended operations. After evaluating this industry comment, the staff agreed that cracks in the steel elements component supports caused by vibratory stress would be developed in a matter of hours or days. This time frame is not consistent is not consistent with the requirements of the License Renewal Rule, which addresses a slow aging process affected by extended operations. Accordingly, the staff deleted cracking of metal components from the GALL Report.

In response to questions from the Subcommittee, the staff provided additional clarifying information. Specifically, the deletion of the cracking requirement from the GALL report only applies to the steel component supports listed in Chapter III that are not designed for any vibratory motion. Complex assemblies, such as fans, that have supports that were designed with cyclic loadings in mind, would still be handled as a time limited aging analysis (TLAA). In the case of steel component supports, vibratory loads would be unanticipated events, not design basis or anticipated events. Chapter IIIB of the GALL Report specifically addresses supports for components such as fans (e.g., a vibration isolator).

Changes to the GALL Report, Chapter IV - Mr. Jerry Dozier, License Renewal and Standardization Branch, NRR

Mr. Jerry Dozier discussed the changes to Chapter IV of the GALL Report resulting from the public comment period. He noted that Chapter IV deals with the reactor vessel internals, the vessel itself, and also the reactor coolant system. He indicated that these comments were resolved through repackaging of information, providing minimum acceptable programs, providing focus on areas of concern, ensuring relevance of information provided, and adding information for completeness. His presentation focused on demonstrating the types of improvements made to the guidance documents. Specifically, he gave five examples showing some of the ways comments were evaluated and incorporated into the GALL report, Chapter IV.

The first example showed how the staff provided improvement through repackaging of the information provided. There was significant debate and a number of comments on an appropriate threshold for radiation-assisted stress corrosion cracking and void swelling. The staff's concern was not the specific numerical threshold, but on ensuring an effective aging management program. The staff wanted the components at the most susceptible locations to be monitored and inspected utilizing an effective inspection technique. By removing the numerical threshold, the staff eliminated the debate. The end result was an effective aging management program.

The second example was related to aging management of boric acid corrosion using either inservice inspection (ISI) programs or the Generic Letter 88-05 boric acid corrosion program. Since boric acid corrosion programs have been effective in the current term, and are expected

to continue to be effective in the extended term, the staff accommodated the public comment by only referencing the boric acid corrosion program. In this case, only the minimum acceptable program was referenced.

The third example shows how the staff provided focus on the area of concern. Earlier versions of the GALL report listed primary water stress corrosion cracking (PWSCC) as an aging effect to be managed by a plant-specific evaluations. In that case, the applicant could propose a program. During the revision of GALL, the staff focused on giving as much information to the applicant as possible. Specifically, they indicated that PWSCC for Alloy 600 penetrations were adequately managed through water chemistry and ISI programs. The area of concern to the staff was Inconel 182 welds which require a plant-specific evaluation.

The fourth example was an example of ensuring relevance of the information. The staff removed unnecessary (insignificant) aging effects from the GALL report. In this case, they removed wear and loss of material for the core support pads and guide tube cards from the GALL report because these effects are not significant. The components themselves, however, are still in scope and require aging management review. In this example, Mr. Dozier pointed out that the list of components in GALL were based on the Oconee and Calvert Cliffs applications, and were not representative of the full range of components that they could possibly be considered on a generic basis. NEI provided the staff with some additional components that it believed should be included in the GALL report and the programs. As a result, appropriate components such as the incore neutron flux monitoring tubes and the control rod drive head flange bolting were added.

In response to questions from the Subcommittee, the staff provided the following additional information. Although an aging effect has been removed from the GALL Report, the licensees will continue to evaluate the effect through their inservice inspection (ISI) program. However, management of the removed aging effect will not be tied to license renewal. Focusing an applicant on an appropriate aging mechanism such as in the case of the PWSCC of pressurizer inconel 600 penetrations does not lead to neglect in other areas. The GALL Report provides acceptable programs for aging management that can be credited by an applicant in their license renewal application. The GALL Report does not necessarily list all aging effects and does not relieve the applicant of the responsibility to identify all aging effects requiring aging management review for their plant.

Mr. Dozier then described two issues from Chapter IV which were the subject on continued dialogue with NEI. The first item relates operating experience with cracking of small bore piping. NEI's position is that ISI and chemistry control are adequate as aging management programs. Operating experience does not justify doing more. However, the staff position in the GALL report recommends a volumetric one-time inspection for evidence of no cracking to verify the effectiveness of chemistry control.

The second item is management of loss of pre-load of reactor vessel internals bolting using the loose parts monitoring system. NEI's position is that ISI visual examinations are adequate for management of loss of pre-load on reactor vessel internals bolting. The staff position is that the GALL report recommends that loss of pre-load in reactor vessels internal bolting be

managed by ISI and the loose parts monitoring system. There is disagreement between the staff and the industry as to whether ISI is adequate to monitor loss of pre-load of reactor vessel internals bolting.

Changes to the GALL Report, Chapter V, VII and VIII - Mr. Ed Kleeh and Ms. Kimberly Rico, License Renewal and Standardization Branch, NRR

Mr. Kleeh and Ms. Rico presented seven items that give examples of the changes made to Chapter V of the GALL Report in response to public comments. Mr. Kleeh began by discussing the first four items. The first item is that the staff has accepted water chemistry control as an adequate program to manage stress corrosion cracking in the containment spray and safety injection systems of a PWR. Stress corrosion cracking for stainless steel components exposed to borated water can occur at temperatures below 200 degrees Fahrenheit only if the water contains contaminants such as sulphites, sulphates, and chlorides. Stress corrosion cracking does not occur if water chemistry controls the level of those contaminants below specified levels.

The second item is related to the fact that general corrosion causes loss of material for carbon steel components in air but not for stainless steel components exposed to water systems. Pitting and crevice corrosion of carbon steel require an aqueous environment, with their aggressiveness dependent on factors such as local chemistry conditions (e.g., oxygen levels) and component configuration. In addition, general corrosion is a thinning of a metal surface due to chemical attack on aggressive environment, but stainless steel components are not susceptible to it unless contaminants are present. Accordingly, this aging effect does not need to be considered for stainless steel.

The third item is that the staff recognizes that filters are generally short-lived components. Typically, they are replaced based on performance. Accordingly, they may be excluded on a plant-specific basis from aging management review. A conforming change was made to the SRP-LR.

The fourth item relates to management of external surfaces of carbon steel components. The staff considers this to be a plant-specific program. Only service Level I coatings are in scope of the aging management program for monitoring and maintenance of coatings. The intended function of a component is not affected by the degradation of its service Level II and III coatings.

In response to a question from the Subcommittee, the staff stated that if in future unanticipated occurrences of corrosion occurred demonstrating that a conclusion in the GALL Report is non-conservative, the aging management programs would be corrected through the licensee's 10 CFR 50, Appendix B, corrective action program. The licensing process is flexible enough to account for unanticipated problems. In addition, the requirements for the renewed license provides the boundaries upon which Appendix B operates. Specifically, if the design, the environment, or the assumptions associated with the effectiveness of the aging management programs change in the future, then the renewed license requires those changes to be addressed in terms of their impact on the licensing basis. Therefore, the licensing basis would

be maintained by these unanticipated occurrences being addressed with respect to the effectiveness of aging management.

Ms. Kimberley Rico continued the presentation discussing the next three items. The fifth item is an issue identified by NEI related to biofouling and buildup of deposits. Specifically, the issue is whether flow is an active or passive function. The staff concluded that biofouling affects both flow performance and pressure boundary integrity. Flow performance is considered to be an active function covered under the current licensing basis; and therefore, is not included within the scope of license renewal. Biofouling that causes loss of material, however, affects the pressure boundary. This is considered a passive function requiring aging management. Therefore, biofouling was retained as an aging effect to be managed as it relates to the buildup of deposits in heat exchanger tubes.

The sixth item is that an alternative aging management program (AMP) was added to Chapter XI of the GALL Report for buried piping. NEI was concerned with the existing AMP cited in the GALL Report followed the NACE standards. These standards are not currently required to be part of the license, so a new AMP, for buried piping tanks and inspection, was added to the GALL Report.

The last item was the addition of a selective leaching program. Some materials were added at NEI's request based on their use in plants. For some of these materials, selective leaching was identified as the aging mechanism. The staff created an AMP for selective leaching using Oconee's program as a model.

Ms. Rico and Ms. Tanya Eaton, NRR, discussed two items that were the subject of continued dialogue with NEI. For these two items, the current version of the GALL Report includes the staff positions. However, these positions may revised in a future update to the GALL Report if the dialogue with NEI leads the staff to change its initial positions. The first dialogue item relates to cracking of bolts. NEI feels that the aging effect and mechanism associated with crack initiation and growth caused by the combination of cyclic loading and stress corrosion cracking for carbon steel closure bolting on high pressure or temperature systems is not necessary. The staff does not agree because there is ample evidence of these bolts cracking in air for bolting having 150 ksi yield strengths or higher. The second dialogue item relates to inspection of fire protection systems. Specifically, the staff is concerned that there is no requirement in the NFPA code to monitor wall thickness of fire suppression system piping. The GALL Report calls for fire protection system inspections to be performed to monitor through suppression system piping wall thickness and trend them over time. The concern is that thinning of fire protection piping systems could eventually affect the pressure differences in the system. Therefore, in order to meet the requirements of the GALL Report, an applicant has to do more than currently required in the NFPA code. The staff does not know the current industry position on this item, but will continue the dialogue.

In response to a questions from the Subcommittee, the staff indicated that fouling of heat exchanger tubes by zebra mussels was already addressed through existing programs. In addition, the staff had difficulty drawing the distinction between active functions and passive functions. It is easier to consider them in terms of active system demands and performance

and system reliability versus passive system functions. The staff focused on aging effects. Heat transfer is not an aging effect. Heat transfer is more related to system performance that is challenged on a fairly frequent basis. Crud buildup does have an impact on loss of material, which is an aging effect. That is the focus of the GALL Report. The staff also committed to research how compressed air system receivers and aluminum condensate storage tanks are addressed in the GALL Report. However, in cases where the GALL Report does not address specific components, the staff stated that their expectation is that there would be a plant-specific program addressing the material, the environment, and the aging effects. Items that are missed in the initial release of the GALL Report will be captured in future updates as lessons are learned. The GALL Report has not been used widely by the license renewal applicants to date because the report has been evolving and has not yet been approved.

Changes to the GALL Report, Chapter VI - Mr. S.K. Mitra, License Renewal and Standardization Branch, NRR

Mr. Mitra discussed the changes to Chapter VI of the GALL Report resulting from the public comments. He specifically discussed three items. The first item is that the staff consolidated the boric acid corrosion programs in the GALL Report based on industry comments. The second item is that the staff incorporated examples of specific insulation tests for medium voltage cables. AMP XI.E.3 in the GALL Report deals with medium voltage cables exposed to significant moisture significant warpage. This AMP was modified to include examples of acceptable monitoring tests that provide indications of the condition of conductor insulation. The third item is that the staff requirement that the first inspection/test of cables be completed prior to the period of extended operation. This requirement was added to AMPs XI.E.1, XI.E.2, and XI.E.3, for the detection of aging effects to ensure that a 10-year inspection/test frequency will provide at least two data points during 20 year period. Two data points can be used to characterize the degradation rate. This change was added to be consistent with the requirement in the SRP-LR and applies to low, medium or high voltage non-environmentally qualified cables.

In response to questions from the Subcommittee, the staff stated that the type of test was not specified in the GALL Report so that the applicant can use the best ("state of the art") test at the time in which the test will be conducted. Prior to conducting the test, the utility will discuss the type of test and acceptance criteria with the NRC allowing the staff the opportunity to agree or disagree with the type of test being conducted and the acceptance criteria.

One-time Inspections, Regulatory Guide and NEI 95-10 - Mr. Dave Solorio, License Renewal and Standardization Branch, NRR

Mr. Solorio discussed the proposed final versions of RG 1.188 and NEI 95-10. He then discussed one-time inspections. RG 1.188 proposes to endorse NEI 95-10, Revision 3, without exception because NEI 95-10 provides acceptable methods for complying with the requirements of the license renewal rule. Two changes were made to the regulatory guide in response to public comments. First, guidance was added for submitting electronic license renewal applications. Second, a note was added to clarify to indicate that color drawings may be used; however, no essential information should be lost if the drawings are printed in black

and white because members of the public may not have access to color equipment.

In response to questions from the Subcommittee, the staff discussed the reasons why so much information is left out of the non-proprietary versions of the license renewal application. Specifically, Boiling Water Owners Group (BWROG) and the Electric Power Research Institute (EPRI) made the case that the material that is withheld from the non-proprietary version of the application is marketable material, and the staff agrees. There are standards that test proprietary nature of a document, and marketability is part of the test. The staff would prefer to be able to disclose these license renewal details to the public. However, the provisions for proprietary material and protection of confidential business information makes it difficult to make the license renewal process as transparent to the public as the staff would prefer. The standard for proprietary determination does involve consideration of whether or not the right of the public outweighs the marketable value of the application. The staff attempts to write safety evaluations so that they present the safety evaluation findings with sufficient material content of to explain the basis for a reasonable assurance finding, without disclosing the details of the material that the owners groups and EPRI want to market. There are processes by which interested members of the public can view proprietary material through legal means. It requires that they make a contractual arrangement that they will not disclose that marketable material.

Mr. Solorio then discussed NEI 95-10. Specifically, he discussed the types of changes made in Revision 3 which allowed the staff to endorse the document in its proposed final RG 1.188. These changes were broken down into three categories: 1) consistency changes (e.g., making the table of contents in NEI 95-10 consistent with the statement of contents in the SRP-LR to ensure a consistent format for future license renewal applications), 2) additional guidance regarding the timing that an applicant is required to address Unresolved Safety Issues (USIs) and Generic Safety Issues (GSIs), and 3) conforming changes resulting from changes to the regulation involving the accident source term, 10 CFR 50.67.

Mr. Solorio then discussed some of the reasons for the differences in the numbers of one-time inspections between different license renewal applications received to date. Mr. Solorio presented a table that compared the one-time inspections from the Calvert Cliffs and Oconee applications with the recommendations of the GALL Report. He stated that a plant-specific aging management program can be a one-time inspection or an ongoing program. It appears that there are differences in the number of one-time inspections between the GALL Report, Calvert Cliffs, and Oconee. Mr. Solorio provided a number of reasons that explain these differences. Specifically,

- Plant-specific design features: Oconee has several features which were unique and not included in the GALL Report. These features were not applicable to Calvert (e.g., dam emergency power source and the safe shutdown facility structure).
- In many cases, Calvert Cliffs proposed one-time inspections not specifically requested by the staff.
- Applicants have different names for some of the systems performing the same functions. Low pressure service water and high pressure service water at Oconee are utilized for fire protection.
- In some cases (e.g., reactor vessel internals), the staff required a one-time inspection

for certain components at Calvert Cliffs that were not required for Oconee because of differences in component design. The GALL Report requires a plant-specific evaluation of certain reactor vessel internals. In other cases, the applicants included one-time inspections not included in the GALL Report based on plant-specific evaluations (e.g., steam generator tube supports and the pressurizer).

BWRVIP Topical Reports - Mr. Gene Carpenter, Materials and Chemical Engineering Branch, NRR

Mr. Carpenter began by introducing Mr. Robin Dyle of the BWRVIP to give an introduction on the BWRVIP reports as they relate to license renewal. Mr. Dyles presentation is discussed in detail below under "Industry Presentations." Following Mr. Dyle's presentation, Mr. Carpenter provided a presentation on four specific BWRVIP topical reports:

- BWRVIP-76, "BWR Core Shroud Inspection and Evaluation Guidelines."
- BWRVIP-41, "BWR Jet Pump Assembly Inspection and Evaluation Guidelines."
- BWRVIP-26, "Top Guide Inspection and Evaluation Guidelines."
- BWRVIP-75, "Technical Basis for Revisions to Generic Letter 88-01 Inspection Schedules (NUREG-0313)."

Mr. Carpenter further introduced Mr. Dyle's presentation by stating that the BWRVIP is a voluntary industry initiative that began in 1994 to address the Generic Letter 94-03 on core shroud cracking issues. Since then, the project has grown to address all BWR internal components, reactor vessel, and Class I piping. It also covers the current operating term and the extended operating period. The BWRVIP is proactively addressing aging degradation issues that are beyond regulatory requirements. The staff has been reviewing the BWRVIP topical reports that include 15 inspection flaw evaluation guidelines, 13 repair and replacement design criteria guidelines; four crack growth and mitigation guidelines; 22 other supporting reports; and 12 license renewal appendices. Although there are 15 inspection and flaw evaluation guidelines, Mr. Carpenter pointed out that three of them have been subsumed into two others. The inspection and flaw evaluation guidelines along with the 12 license renewal appendices make up the aging management program. The staff expects to finish the reviews of these documents listed by the end of this year.

Following Mr. Dyle's presentation Mr. Carpenter continued his presentation. The following summarizes the key points of his presentation:

- The staff has completed its review of almost all of the BWRVIP reports to date. The staff has concluded that the implementation of the BWRVIP guidelines, as modified to address the staff's comments in the various BWRVIP topical report safety evaluations, will provide an acceptable level of quality for inspection of flaw evaluation of the subject safety-related components. The vast majority of the BWRVIP program deals with components that are outside the scope of the inspections required by the regulations. An independent review by the Office of Nuclear Regulatory Research, documented in NUREG/CR-6677, concluded that the BWRVIP program and other such comprehensive inspection programs will significantly reduce core damage frequency.

- In reviewing the BWRVIP-41 topical report, there were instances of stainless steel components in the jet pump assemblies that may be adversely affected by high fluence levels. This will be evaluated in future reviews. The staff will resolve this issue before the license renewal term begins.
- Overall, the BWRVIP reports provide preventive actions to reduce susceptibility to stress corrosion cracking, parameters to be monitored and inspected, and criteria for examination expansion and reinspection. The guidelines ensure that age-related degradation will be detected before any loss of intended function occurs. For corrective actions, the VIPs provide repair criteria.
- For BWRVIP-75, the inspection and evaluation guidelines are intended to be applicable at any time in operating life up to year 60. Accordingly, there will be no separate license renewal safety evaluation for this report.

In response to questions from the Subcommittee, the staff provided the following information. BWRVIP-75 does allow for changes to the frequency of piping inspections (either increasing or decreasing) based on level of fluence experienced by the piping and the water chemistry. The staff has not completed its review of the BWRVIP-75 report. There are several open issues related to proposed inspection frequencies, the scope of the weld categories, sample expansion, reactor water coolant conductivity, effective hydrogen water and noble metal chemistry programs, and the identification of safety-significant locations. The staff is expecting a response from the BWRVIP to these issues in the near term. The BWRVIP is a "living program." If future experience that cracking of components is occurring at greater rates than previously expected, the program would be modified to account for the new experience. The program would also be modified if the crack growth models assumed in the BWRVIP topical reports were found to be non-conservative. Due to the number of plants in the BWRVIP program, inspections are occurring regularly providing a large database on which to verify adequate inspection frequencies. The staff receives a semi-annual inspection summary from the BWRVIP that allows them to independently assess the program. For the majority of the cases, above the threshold fluence level inside the reactor vessel, a crack growth rate of 5E-5 inches per hour is used by the BWRVIP. In some cases, the crack growth rate has been reduced where the BWRVIP has been able to demonstrate a basis to do so.

INDUSTRY PRESENTATIONS

Changes to NEI 95-10: Industry Guidance - Mr. Doug Walters, NEI

Mr. Walters discussed some of the information included in the NEI 95-10 document. First, the GALL report is included by reference in the NEI 95-10 guidance. Mr. Walters indicated that a license renewal demonstration program is currently underway with the Class of 2002 license renewal applicants (i.e., applicants expected to submit applications in 2002) to demonstrate how to use GALL in preparing a license renewal application. As a result, a number of changes that have been identified for NEI 95-10 have been deferred until completion of the demonstration program.

One key element of the NEI 95-10 guidance is the standard application format and content. The guidance follows the format and content of the SRP-LR. Another key element is Appendix

B to NEI 95-10. This appendix provides a table of components and commodity groups that are subject to an aging management review. This provides a good tool certainly for performing a screening analysis once the scoping has been completed.

Mr. Walters then discussed some of the specific enhancements that were made to revision 3 of the NEI 95-10 document including the addition of Appendix C. This appendix includes copies of written communications between the staff and the industry to provide additional clarification of certain staff positions. Also, definitions for terms like "plausible" or "significant" were added. Another enhancement included adding severe accident management guidelines as a potential information source.

In response to questions from the Subcommittee, Mr. Walters indicated that Appendices B and C to NEI 95-10 are currently shown as optional, but may be changed to mandatory after the results of the demonstration program are evaluated. Mr. Walters also stated that despite the fact that there were a few open issues still under dialogue, the GALL Report includes a lot of information which has been agreed upon by both the staff and the industry. As a result, he believes that the documents should be issued, and the open items can be resolved for a future update.

Staff Introduction Concerning BWRVIP Topical Reports Related to License Renewal - Mr. Robin Dyle, BWRVIP

Mr. Dyle gave an overview of the BWRVIP program. He started by giving the history of how the BWRVIP began. He stated that the shroud cracking that occurred in 1993 and 1994 provided evidence that the industry needed to address intergranular stress corrosion cracking (IGSCC) in BWR vessel internals. In 1994, the utility executives separated the issue from the owners group and formed the BWRVIP as a stand-alone committee that would focus on the internals.

The focus of the project was to lead the industry toward a proactive generic solution. No licensing arguments are utilized in the BWRVIP topical reports. The focus is on the technical solution to the problem. The program did attempt to be cost effective while providing optional approaches to give a utility flexibility. The BWRVIP also serves as the focal point to interact with the staff. The BWRVIP also shares information amongst its members. All inspection information is funneled back to the members and the staff. The program is a living program. Corrections are made as new lessons are learned. All domestic BWRs are members of the project and there are a number of foreign members also.

The project scope was the vessel, internal components and the nozzle. From the safe end weld out belonged to the owners group or some other activity. The BWRVIP products include the following types of guidelines: 1) inspection and evaluation (I&E) guidelines for identification and evaluation of flaws, 2) non-destructive examination (NDE) guidelines detailing how to implement inspection methods, 3) repair guidelines for flaw repair, and 4) mitigation guidelines for prevention of flaws through water chemistry, etc.

A safety assessment was performed in 1995 to identify specifically which components are necessary to maintain safe operation and shut down capability based on five criteria: 1)

maintain a coolable geometry, 2) maintain rod insertion times, 3) maintain reactivity control, 4) assure core cooling, and 5) assure instrumentation availability. These criteria were all considered in determining whether a component was safety-related.

In response to questions from the Subcommittee, Mr. Dyle further indicated that frequency of past events was not a significant consideration in performing the safety assessment. The components to be examined first were determined based on their safety significance as opposed to the frequency of cracking in the component. Failures of many of the components in the core due to cracking could lead to core movement.

Mr. Dyle described the contents of an I&E guideline, and pointed out that the BWRVIP reports are based on the component configurations in the original design. If a plant has made modifications, they must adjust the guidelines accordingly to suit their configuration. He identified the main contents of an I&E guideline as being a description of the component, a discussion of the susceptibility of the component to IGSCC or other failure mode, a discussion of the consequences associated with the failure of that component, the inspection history, the inspection requirements, the evaluation methods, and the reporting requirements. He pointed out that in many cases, inspections beyond those required by the BWRVIP reports are performed by utilities for economic reasons.

Mr. Dyle described the types of inspections utilized in the I&E Guidelines. Specifically, he indicated that there are five types of inspections: EVT-1 (enhanced visual with a ½ mil resolution), VT-1 (visual with a 1/32 inch resolution), VT-3 (general visual), UT (ultrasonic), and ET (eddy current). Older and less reliable methods such as the core spray visual test (CSVT-1) have been eliminated. The results of these inspections are sent to the Electric Power Research Institute (EPRI) who compiles a summary and provides it to the NRC every six months. This data is evaluated by the BWRVIP to determine if the program requirements need adjustment.

Mr. Dyle discussed BWRVIP-62 which is still under NRC review. This report provides for inspection relief on the basis of hydrogen water chemistry (HWC) or noble metal chemical additions (NMCA). In response to a question from the Subcommittee, he indicated that to credit HWC for a given location, the plant has to be able to demonstrate that the injection rates being utilized are sufficient to ensure the appropriate electro-chemical potential at the location where credit is being taken.

BWRVIP-03 provides the NDE guidelines for conducting inspections. For instance, for UT, BWRVIP-03 specifies the type of transducers, frequency (megahertz), size, angles, etc. It also provides NDE uncertainty. BWRVIP-03 is updated annually. Mr. Dyle indicated that one of the areas that presents a problem is inspection of repairs. At present, the BWRVIP places the onus on the owner to specify the inspections necessary to assure that the repair, in conjunction with that component, will perform their intended safety function.

Where the BWRVIP inspection or repair requirements are different than industry codes required by the NRC's regulations, the utility must first get approval from the NRC before using the BWRVIP guidelines in lieu of the code requirements. BWRVIP I&E guidelines were developed without regard to a specified operating period, and as such, appendices were developed to

demonstrate compliance with the License Renewal Rule (10CFR54). The BWRVIP reports were not developed to ensure components met their safety function for some limited amount of time. Rather, they were meant to maintain these components for the life of the plant regardless of the length of plant life.

In response to questions from the Subcommittee, Mr. Dyle indicated that the BWRVIP is tied in to the GALL report. For example, for the core shroud, the GALL report would indicate that BWRVIP-76 is an adequate AMP. NEI 95-10 does not yet reflect implementation of the BWRVIP topical reports. In addition, the BWRVIP is a voluntary initiative. The owners review the BWRVIP report when it is first developed. They all approve it prior to its submission the NRC for review. Upon approval by the NRC, the owners are expected to implement the program within a reasonable amount of time. If they do not intend to do so, they must notify the NRC within 45 days. Mr. Carpenter, NRR, added that at the current time, every BWR licensee in the U.S. has committed to following the BWRVIP, there have been only a very few instances where a utility has taken minor exceptions to the VIP documents. These exceptions have usually been a matter of timing as opposed to actually doing the inspections.
In response to questions from the Subcommittee, Mr. Dyle stated that inspection frequency does not necessarily increase with age. Inspections are performed at a frequency that is believed to be adequate to identify cracking before a serious problem occurs. The crack growth model does change at a certain fluence level, but that only affects components with an identified flaw. For instance, the frequency would increase for a component with an identified flaw if the fluence level were to exceed $5E^{+20}$ neutrons per square centimeter. Below the threshold fluence level, cracks are assumed to grow at $1E^{-5}$ inches per hour. Above the threshold limit, they are assumed to grow at $5E^{-5}$ inches per hour leading to an associated increase in inspection frequency. By integrating the inspection data from all the BWRs in the program, any problem with the current inspection frequencies and procedures can be identified early and adjusted as needed. Approximately 33 to 34 plants out of 36 domestic BWRs utilize HWC to mitigate crack propagation. There is evidence that this strategy is working to minimize crack growth. Many plants are looking to augment the HWC program with NMCA.

Mr. Dyle next discussed the BWRVIP-41 Report for jet pump assemblies. He stated that the main safety function of these components is to preserve 2/3 core coverage during an accident and to provide a pathway for low pressure coolant injection. In response to questions from the Subcommittee, Mr. Dyle indicated that in preparing the BWRVIP-41 I&E guidelines, the BWRVIP did consider cracking, fatigue, IGSCC, and loose parts. Loose parts is covered by BWRVIP-06. Mr. Dyle also stated that he did not believe that failure of a jet pump could prevent core cooling.

Mr. Dyle continued with a description of the weld locations in the reactor vessel. The bulk of the cracking identified to date has been in the high fluence region and up top. He indicated that some of the weld locations are not safety significant in that if they were to fail, the operators would still be able to shut down the plant and maintain core cooling. However, as a conservative measure, the BWRVIPs still require these welds to be inspected. Based on the industry experience to date, Mr. Dyle stated that they have a good understanding of crack growth rates of irradiated stainless steel, and conservative inspection schedules are being established accordingly.

In response to questions from the Subcommittee, Mr. Dyle affirmed that access hole covers have been troublesome. He noted that there have been several designs that experienced weld cracking. They have been removed and replaced with mechanical connections. He also stated that component inspection frequency is based on the component's safety significance, and that operating history is considered in determining frequency.

The last item that Mr. Dyle discussed was the BWRVIP activities with IGSCC and piping, specifically, BWRVIP-75. For the BWR piping, there were scattered incidents of IGSCC during the 1960s. During the 70s, the industry began to deal with small diameter pipe cracking, particularly in the bypass lines around the valves. The industry believed that large bore piping would never crack. However, during the 1970s, large diameter pipe cracking was experienced. In response, the BWR Owners Group established its pipe cracking initiative, and the staff issued Generic Letter 88-01 and NUREG-0313 to address the cracking issues in 1988. These programs have been in place for years. The BWRVIP-75 revisits these programs.

The categorization of welds utilized in GL 88-01 remain today, and are unchanged by BWRVIP-75. Some of the control strategies used include early detection of IGSCC before any damage compromises system integrity, preventing crack initiation by utilizing materials that are resistant, use of weld overlays to reinforce the material, heat stess improvement, mechanical stress improvement, and mitigation technologies of water chemistry to slow crack initiation and growth. Mr. Dyle noted that the industry has been very effective in eliminating the problem. However, continuing to do inspections creates a worker dose problem, particularly in those plants using HWC. Dose was a concern to the BWRVIP. So the BWRVIP revised the inspection frequency requirements for each weld category utilizing the abundance of data accumulated over the past 15 years and operating experience. The staff has reviewed the BWRVIP-75 report and has issued a safety evaluation with open items. The BWRVIP is currently addressing the open items.

Mr. Dyle concluded his presentation by stating that the industry believes that the BWRVIP has developed a technically sound program that is broad in scope, and is sufficiently in-depth technically to address the concerns of the BWR internals and the associated programs. They also believe that the BWRVIP includes the appropriate elements in regard to what to inspect, how often to inspect, how often to reinspect, the inspection methods to be used, the methodology to evaluate any identified flaws, the repair methodologies , and the mitigation technologies that we can use to minimize the effect of IGSCC. And because the BWRVIP reports were developed for the current term and renewal term to try to address all known degradation mechanisms, they believe that the BWRVIP reports are appropriate for use for license renewal.

SUBCOMMITTEE COMMENTS, CONCERNS, AND RECOMMENDATIONS

None.

STAFF AND INDUSTRY COMMITMENTS

None.

SUBCOMMITTEE DECISIONS

The Subcommittee decided to prepare a draft report for the full Committee's consideration at the April 5-7, 2001 ACRS meeting.

FOLLOW-UP ACTIONS

None.

PRESENTATION SLIDES AND HANDOUTS PROVIDED DURING THE MEETING

The presentation slides and handouts used during the meeting are available in the ACRS office files or as attachments to the transcript.

BACKGROUND MATERIAL PROVIDED TO THE SUBCOMMITTEE:

1. DRAFT NUREG-1739, "Analysis of Public Comments n the Improved License Renewal Guidance Documents," dated March 1, 2001.

2. DRAFT NUREG-1800, "Standard Review Plan for Review of License Renewal Applications for Nuclear Power Plants," dated March 1, 2001.

3. DRAFT NUREG-1801, Vol. 1, "Generic Aging Lessons Learned (GALL) Report, Summary," dated March 1, 2001.

4. DRAFT NUREG-1801, Vol. 21, "Generic Aging Lessons Learned (GALL) Report, Tabulation of Results," dated March 1, 2001.

5. US Nuclear Regulatory Guide 1.188, "Standard Format and Content for Applications to Renew Nuclear Power Plant Operating Licenses," Prepublication issued March 2001.

6. NEI 95-10, Revision 3, "Industry Guideline for Implementing the Requirements of 10 CFR Part 54 - The License Renewal Rule," issued March 2001.

7. Memorandum dated March 9, 2000, from William Bateman, NRR, to Christopher Grimes, NRR, Subject: Acceptance for Referencing of BWR Vessel and Internals Project, BWR Top Guide Inspection and Flaw Evaluation Guidelines (BWRVIP-26) Report for Compliance With the License Renewal Rule (10 CFR Part 54).

8. BWRVIP-26, "Top Guide Inspection and Flaw Evaluation Guidelines," December 1996. **[Proprietary Information]**

9. Letter dated June 13, 2000, from Jack R. Strosnider, NRR, to Carl Terry, BWRVIP Chairman, Subject: Initial Safety Evaluation Report, "BWR Jet Pump Assembly Inspection and Flaw Evaluation Guidelines (BWRVIP-41)."

10. BWRVIP-41, "BWR Jet Pump Assembly Inspection and Flaw Evaluation Guidelines," October 1997. **[Proprietary Information]**

11. Letter dated September 15, 2000, from Jack R. Strosnider, NRR, to Carl Terry, BWRVIP Chairman, Subject: Initial Safety Evaluation Report, "BWRVIP Vessel and Internals Project, BWR Vessel and Internals Project, Technical Basis for Revisions to Generic Letter 88-01 Inspection Schedules (BWRVIP-75)," EPRI Report TR-113932, October 1999 (TAC NO. MA5012).

12. BWRVIP-75, "Technical Basis for Revisions to Generic Letter 88-01 Inspection Schedule (NUREG-0313)," October 1999. **[Proprietary Information]**

13. EPRI Report TR-110172, "Technical Justification for the Extension of the Interval between Inspections of Weld Overlay Repairs," issued February 1999. **[Proprietary Information]**

14. Letter dated September 15, 1997, from Jack R. Strosnider, NRR, to Carl Terry, BWRVIP Chairman, Subject: Transmittal of NRC Staff's Safety Evaluation of the BWR Vessel and Internals Project BWRVIP-07 Report.

15. BWRVIP-76, "BWR Core Shroud Inspection and Flaw Evaluation Guidelines," December 1999. **[Proprietary Information]**

••

NOTE: Additional details of this meeting can be obtained from a transcript of this meeting available in the NRC Public Document Room, One White Flint North, 11555 Rockville Pike, Rockville, MD, (301) 415-7000, or can be purchased from Neal R. Gross and Co., Inc. 1323 Rhode Island Avenue, N.W., Washington, D.C. 20005, (202) 234-4433.

••

ADVISORY COMMITTEE ON REACTOR SAFEGUARDS
MEETING OF THE PLANT LICENSE RENEWAL SUBCOMMITTEE
LICENSE RENEWAL GUIDANCE DOCUMENTS AND SELECTED BWRVIP REPORTS
MARCH 27, 2001
ROCKVILLE, MARYLAND

- PROPOSED SCHEDULE -

	TOPIC	PRESENTER	TIME
I.	Opening Remarks	M. Bonaca, ACRS	8:30-8:35 a.m.
II.	Staff Opening Remarks	C. Grimes, NRR	8:35-8:40 a.m.
III.	Introduction and Overview	S. Lee, NRR	8:40-8:50 a.m.
IV.	Overview of Public Comments	S. Koenick, NRR	8:50-9:00 a.m.
V.	Changes to Standard Review Plan (SRP): Scoping and Screening Methodology	S.K. Mitra	9:00-9:15 a.m.
VI.	Changes to Generic Aging Lessons Learned (GALL) Report, Chapters II and III	P. Kang	9:15-9:45 a.m.
	- BREAK -		9:45-10:00 a.m.
VII.	Changes to GALL, Chapter IV	J. Dozier	10:00-10:30 a.m.
VIII.	Changes to GALL, Chapters V, VII and VIII	E. Kleeh K. Rico	10:30-11:00 a.m.
IX.	Changes to GALL, Chapter VI	S.K. Mitra	11:00-11:15 a.m.
X.	One-time Inspections, Regulatory Guide, NEI 95-10	D. Solorio	11:15-11:30 a.m.
XI.	Changes to NEI 95-10: Industry Guidance	D. Walters, NEI	11:30-~~12:00~~ 12:20 noon
	- LUNCH -		~~12:00-1:00~~ 12:20 - 1:18 p.m.
XII.	Staff Introduction Concerning BWRVIP Topical Reports Related to License Renewal	R. Dyle, BWRVIP	~~1:00~~ 1:18-1:30 p.m.
XIII.	BWRVIP 76: Core Shroud Inspection	G. Carpenter, NRR	1:30-2:30 p.m.
	- BREAK -		2:30-2:45 p.m.
XIV.	BWRVIP 41: Jet Pump Assembly Inspection	G. Carpenter, NRR	2:45-3:15 p.m.

XV. BWRVIP 26: Top Guide Inspection	G. Carpenter, NRR	3:15-3:45 p.m.
XVI. BWRVIP 75: Technical Basis for Revisions to Generic Letter 88-01 Inspection Schedules	G. Carpenter, NRR	3:45-4:30 p.m.
XVII. Discussion	M. Bonaca, ACRS	4:30-~~5:00~~ 4:15 p.m.
XVIII. Recess	M. Bonaca, ACRS	~~5:00~~ 4:16 p.m.

NOTE: Presentation time should not exceed 50 percent of the total time allotted for specific item. The remaining 50 percent of the time is reserved for discussion.

Number of copies of the presentation materials to be provided to the ACRS - 25.

ADVISORY COMMITTEE ON REACTOR SAFEGUARDS

SUBCOMMITTEE MEETING ON PLANT LICENSE RENEWAL

MARCH 27, 2001
Date

NRC STAFF SIGN IN FOR ACRS MEETING

PLEASE PRINT

NAME	AFFILIATION
Jit VORA	NRC/RES/DET
Peter J. LEAHY	NRC/DRIP/RLSB
MANNY COMAN	NRC/DRIP.
SAM LEE	NRC/NRR/DRIP/RLSB
Stephen Koenick	NRC/DRIP/RLSB
PAUL shemanski	NRC/NRR/DE/EEIB
S K. MITRA	NRC/NRR/~~DE~~ DRIP/~~EEI~~ RLSB
G. S. Gellati	NRC/DIPM/IOPB
Pei-Ying Chen	NRC/NRR/DE/EMEB
Michael McNeil	NRC/RES/DET/MEB
P T KUO	NRC/NRR/DRIP/RLSB
W. C. Liu	NRC/NRR/DRIP/RLSB
K. Riu	NRC/NRR/DRIP/RLSB
JIM DAVIS	NRC/NRR/EMCB
Chuck HSU	NRC/RES/MEB
TAMMY BLOOMER	NRC/NMSS/DWM
BRIAN THOMAS	NRR/DSSA/SPLB
Raj Anand	NRR/~~DSSA~~ DRIP/RLSB
JF Costello	~~RES~~ /DET
Goutam Bagchi	NRR/DE
HANS ASHAR	NRR/DE/EMCB
ROB ELLIOTT	ACRS

BARRY ELLIOT	NRC/NRR/EMCB
HERMAN GRAVES	NRC/RES/ERAB
SYED SHAUKAT	NRC/RES/ERAB
John Hannon	NRC/DSSA/SPLB
Chris Grimes	NRC/DRIP/RLSB
KEITH WICHMAN	NRR/DE/EMCB
Bill Bateman	"
WM BURTON	NRR/DRIP/RLSB
Allen Hiser	NRR/DE/EMCB
PAT PATNAIK	NRR/DE/EMCB
Jai Rajan	NRR/DE/EMCB
K. Parczewski	NRR/DE/EMCB
J Dozier	NRR/DRIP/RLSB
W. Koo	NRR/NRR/DE/EMCB
T. Y. Chang	NRC/RES/DET/ERAB
Wallace Norris	NRC/RES/DET/MEB
C. E. Carpenter	NRC/NRR/DE/EMCB
Charles R Pierce	Southern Nuclear
Andrea Keim	NRC/NRR/DE
H.F. Conrad	NRC/NRR/DE
Michael McNeil	NRC/RES/DET/MEB

ADVISORY COMMITTEE ON REACTOR SAFEGUARDS

SUBCOMMITTEE MEETING ON PLANT LICENSE RENEWAL

MARCH 27, 2001
Date

ATTENDEES - PLEASE SING IN BELOW

PLEASE PRINT

NAME	AFFILIATION
Yung Y. Liu	ANL
Omesh Chopra	ANL
Shiu-Wing Tam	ANL
JOHN RYCYNA	CNS
Wayne Lunceford	SNC
Rich Morante	BNL
JOSEPH BRAVERMAN	BNL
ROBERT LOFARO	BNL
DOUG WALTERS	NEI
ERACH PATEL	EXELON
Donald Ferraro	Winston & Strawn
Ch.	
David C. Jeng	NRC/NRR
David L. Solorio	NRC/NRR
Tanya M. Eaton	NRC/NRR
Steven G. TONEY	CONSTELLATION NUCLEAR
Amy Cubbage	NRC/NRR/SRXB
Muhammad A. Razzaque	NRC/NRR/SRXB
Robin Dyle	Southern Nuclear
ROBERT CARTER	EPRI
R. D. BAKER	SOUTHERN NUCLEAR

the ADAMS Public Library component on the NRC Web site, *http://www.nrc.gov* (the Electronic Reading Room).

Dated at Rockville, Maryland, this 31st day of January, 2001.

For the Nuclear Regulatory Commission.

Ledyard B. Marsh,

Chief, Events Assessment, Generic Communications and Non-Power Reactors Branch, Division of Regulatory Improvement Programs, Office of Nuclear Reactor Regulation.

[FR Doc. 01-5744 Filed 3-7-01; 8:45 am]

BILLING CODE 7590-01-P

NUCLEAR REGULATORY COMMISSION

Advisory Committee on Reactor Safeguards; Meeting of the Subcommittee on Plant License Renewal; Notice of Meeting

The ACRS Subcommittee on Plant License Renewal will hold a meeting on March 27, 2001, Room T-2B3, 11545 Rockville Pike, Rockville, Maryland.

The entire meeting will be open to public attendance.

The agenda for the subject meeting shall be as follows:

Tuesday, March 27, 2001—8:30 a.m. until the conclusion of business.

The Subcommittee will review selected boiling water reactor Vessel and Internals Project (BWRVIP) reports applicable to Hatch license renewal and the proposed final revisions of license renewal regulatory guidance documents (Generic Aging Lessons Learned (GALL) report, Standard Review Plan, Regulatory Guide, and NEI 95-10, Industry Guideline for Implementing the Requirements of 10 CFR Part 54—The License Renewal Rule). The purpose of this meeting is to gather information, analyze relevant issues and facts, and to formulate proposed positions and actions, as appropriate, for deliberation by the full Committee.

Oral statements may be presented by members of the public with the concurrence of the Subcommittee Chairman; written statements will be accepted and made available to the Committee. Electronic recordings will be permitted only during those portions of the meeting that are open to the public, and questions may be asked only by members of the Subcommittee, its consultants, and staff. Persons desiring to make oral statements should notify the cognizant ACRS staff engineer named below five days prior to the meeting, if possible, so that appropriate arrangements can be made.

During the initial portion of the meeting, the Subcommittee, along with any of its consultants who may be present, may exchange preliminary views regarding matters to be considered during the balance of the meeting.

The Subcommittee will then hear presentations by and hold discussions with representatives of the NRC staff, BWRVIP, and other interested persons regarding this review.

Further information regarding topics to be discussed, whether the meeting has been canceled or rescheduled, and the Chairman's ruling on requests for the opportunity to present oral statements and the time allotted therefor, can be obtained by contacting the cognizant ACRS staff engineer, Mr. Sam Duraiswamy (telephone 301/415-7364) between 7:30 a.m. and 4:15 p.m. (EST). Persons planning to attend this meeting are urged to contact the above named individual one or two working days prior to the meeting to be advised of any potential changes to the agenda, etc., that may have occurred.

Dated: March 1, 2001.

James E. Lyons,

Associate Director for Technical Support, ACRS/ACNW.

[FR Doc. 01-5752 Filed 3-7-01; 8:45 am]

BILLING CODE 7590-01-P

NUCLEAR REGULATORY COMMISSION

Advisory Committee on Reactor Safeguards

Meeting of the Subcommittee on Plant License Renewal; Notice of Meeting

The ACRS Subcommittee on Plant License Renewal will hold a meeting on March 28, 2001, Room T-2B3, 11545 Rockville Pike, Rockville, Maryland.

The entire meeting will be open to public attendance.

The agenda for the subject meeting shall be as follows:

Wednesday, March 28, 2001—8:30 a.m. until the conclusion of business

The Subcommittee will discuss the draft Safety Evaluation Report for the Southern Nuclear Operating Company, Inc., license renewal application for Hatch Units 1 and 2. The purpose of this meeting is to gather information, analyze relevant issues and facts, and to formulate proposed positions and actions, as appropriate, for deliberation by the full Committee.

Oral statements may be presented by members of the public with the concurrence of the Subcommittee Chairman; written statements will be accepted and made available to the Committee. Electronic recordings will be permitted only during those portions of the meeting that are open to the public, and questions may be asked only by members of the Subcommittee, its consultants, and staff. Persons desiring to make oral statements should notify the cognizant ACRS staff engineer named below five days prior to the meeting, if possible, so that appropriate arrangements can be made.

During the initial portion of the meeting, the Subcommittee, along with any of its consultants who may be present, may exchange preliminary views regarding matters to be considered during the balance of the meeting.

The Subcommittee will then hear presentations by and hold discussions with representatives of the NRC staff, Southern Nuclear Operating Company, Inc., and other interested persons regarding this review.

Further information regarding topics to be discussed, whether the meeting has been canceled or rescheduled, and the Chairman's ruling on requests for the opportunity to present oral statements and the time allotted therefor, can be obtained by contacting the cognizant ACRS staff engineer, Mr. Sam Duraiswamy (telephone 301/415-7364) between 7:30 a.m. and 4:15 p.m. (EST). Persons planning to attend this meeting are urged to contact the above named individual one or two working days prior to the meeting to be advised of any potential changes to the agenda, etc., that may have occurred.

Dated: March 1, 2001.

James E. Lyons,

Associate Director for Technical Support, ACRS/ACNW.

[FR Doc. 01-5753 Filed 3-7-01; 8:45 am]

BILLING CODE 7590-01-P

SECURITIES AND EXCHANGE COMMISSION

Issuer Delisting; Notice of Application to Withdraw from Listing and Registration; (Integrated Orthopaedics, Inc., Common Stock, $.001 Par Value) File No. 1-10677

March 2, 2001.

Integrated Orthopaedics, Inc., a Texas corporation ("Issuer"), has filed an application with the Securities and Exchange Commission ("Commission"), pursuant to section 12(d) of the Securities Exchange Act of 1934 ("Act")[1] and Rule 12d2-2(d)

[1] 15 U.S.C. 78*l*(d).

ADVISORY COMMITTEE ON REACTOR SAFEGUARDS
PLANT LICENSE RENEWAL SUBCOMMITTEE
March 27, 2001

IMPROVED LICENSE RENEWAL GUIDANCE DOCUMENTS

IMPROVED LICENSE RENEWAL GUIDANCE DOCUMENTS

- Generic Aging Lessons Learned (GALL) report (NUREG-1801)
- Standard Review Plan for License Renewal (NUREG-1800)
- Regulatory Guide for License Renewal (RG 1.188)
- Nuclear Energy Institute (NEI) industry guidance 95-10, Rev. 3

(2)

TEAM EFFORT

- Office of Nuclear Reactor Regulation
- Office of Nuclear Regulatory Research
- Argonne National Laboratory
- Brookhaven National Laboratory

13

AGENDA

Topic	Presenter
Introduction	Sam Lee, NRR
Public Comments	Steve Koenick, NRR
Standard Review Plan (Scoping)	S. K. Mitra, NRR
GALL, Chapters II and III (Structures)	Peter Kang, NRR
GALL, Chapter IV (Reactor Coolant System)	Jerry Dozier, NRR
GALL, Chapters V, VII, VIII (Engineered Safety Features, Auxiliary, Steam and Power)	Ed Kleeh, NRR Kimberley Rico, NRR
GALL, Chapter VI (Electrical)	S. K. Mitra, NRR
One-Time Inspections, Reg. Guide, NEI 95-10	Dave Solorio, NRR

14

FUTURE ACTIVITIES

- Submit documents to Commission for approval (April 30, 2001)
- Continue dialog with NEI on 5 items (small-bore piping, bolting, loose parts monitoring, IPE/IPEEE scoping, fire protection)
- Participate in NEI demonstration project to implement improved guidance documents

PUBLIC COMMENTS

- 9/25/00 public workshop
  - 115 participants

- 128 written commenters
  - 101 individuals
  - 15 public interest groups
  - 12 industry groups/utilities

- NUREG-1739, "Analysis of Public Comments on the Improved License Renewal Guidance Documents"

STANDARD REVIEW PLAN (CHAPTER 2: SCOPING)

Changes Resulting from Public Comments

- Incorporated severe accident management to source documents to consider for scoping
- Clarified the focus of the scoping review

NEI Continued Dialog Item

- IPE/IPEEE as source document to consider for scoping

GALL, CHAPTERS II AND III (STRUCTURES)

Changes Resulting from Public Comments

- Specific criteria were developed to address aging management of inaccessible areas for concrete and steel
- Use IWE with Appendix J and coatings program (if credited) for managing loss of material due to corrosion of containment steel elements
- Use a combination of water chemistry program and monitoring of the pool water level to manage SCC and crevice corrosion of stainless steel spent fuel pool liner
- Cracking of component supports (metal members) due to vibratory loads and cyclic loading was determined not to be a license renewal issue

GALL, CHAPTER IV (REACTOR COOLANT SYSTEM)

Changes Resulting from Public Comments

- Added PWR reactor vessel internals program description to resolve the neutron fluence threshold issue for reactor vessel internals
- Boric Acid Corrosion programs (GL 88-05) are fully credited to manage the effects of boric acid corrosion
- PWSCC of pressurizer Inconel 600 penetrations is adequately managed by the chemistry and ISI programs; the Inconel 182 welds are a plant specific evaluation
- Removed insignificant aging effects such as wear/loss of material for the core support pads and the guide tube cards
- Added components such as the incore neutron flux monitoring tubes and flange bolting

NEI Continued Dialog Items

- Operating experience with cracking of small-bore piping
- Management of loss of preload of reactor vessel internals bolting using the loose parts monitoring system

20

GALL, CHAPTERS V, VII, VIII (ENGINEERED SAFETY FEATURES, AUXILIARY SYSTEMS, STEAM AND POWER CONVERSION SYSTEM)

Changes Resulting from Public Comments

- Water chemistry program manages stress corrosion cracking in containment spray and safety injection systems
- General corrosion causes loss of material for carbon steel components in air but not for stainless steel components exposed to water systems
- Filters are considered short-lived components
- Management of external surfaces of carbon steel components is plant specific
- Biofouling could cause corrosion in untreated water systems
- Alternative to manage corrosion of buried piping

- Program to manage selective leaching of metal components in water systems

NEI Continued Dialog Items

- Operating experience with cracking in bolting
- Inspections of fire protection systems

22

GALL, CHAPTER VI (ELECTRICAL)

Changes Resulting from Public Comments

- Consolidated boric acid corrosion programs
- Incorporated examples of specific insulation tests for medium voltage cables
- First inspection/test of the cables to be completed prior to the period of extended operation

CHANGES TO RG 1.188 (FORMALLY DG-1104)

- Endorses NEI 95-10, Revision 3
- To address two public comments additional clarification was added to
  - Promulgate recent guidance regarding electronic submittals
  - Ensure information was not lost for graphical presentations

24

CHANGES TO NEI 95-10 REVISION 3 (MARCH 1, 2001)

- Consistency changes
- Additional guidance for addressing GSIs/USIs
- Conforming changes resulting from changes to accident source term

ONE-TIME INSPECTIONS

System	Calvert	Oconee	GALL
Reactor Vessel, Internals, and Reactor Coolant System	RCS-SBP, RVI, PZR	RCS-SBP, OTSG, PZR	RCS-SBP, RVI, PZR
Engineered Safety Features	CIG, SI, CS	LPI, RBS	ECCS
Auxiliary Systems	CC, SRW, SW, FP, CVCS, CA, EDG, RM, NSSS-Sampling, CR & DGB HVAC, PC-HVAC, Instru Lines, AB-HVAC	CC, SRW, LPSW/HPSW, CAS, DJW, CW, CCW, RCPMOC, DW, LWD, PS Systems: CD, DA, GA, SSFASW, SSFDW, SSFSL	CCCS, OCCS, FP, EDG, SFS, SFCC, SDC, DFO
Steam and Power Conversion	FW, MS, ES, N&H, AFW	TGCW, TSP, Cond PS Systems: ASW	FW, STS, ES, Cond, SGB, AFW

26

AFW - Auxiliary Feedwater
AB-HVAC - Auxiliary Building Heating and Ventilation
ASW - Auxiliary Service Water
CA - Compressed Air
CAS - Chemical Addition
CC - Component Cooling
CCW - Condenser Circulating Water
CD - Carbon Dioxide system
CIG - Containment Isolation Group
Cond - Condenser/Condensate system
CR & DGB HVAC - Control Room and Diesel Generator Building HVAC
CVCS - Chemical and Volume Control System
CW - Chilled Water
DA - Depressing Air system
DFO - Diesel Fuel Oil
DJW - Diesel Jacket Water
DW - Demineralized Water

ECCS - Emergency Core Cooling System
EDG - Emergency Diesel Generator
ES - Extraction Steam
FWS - Feedwater system
GA - Governor Air system
HPSW - High Pressure Service Water
Instru Lines - Instrument Lines
LPI - Low Pressure Injection
LPSW - Low Pressure Service Water
LWD - Liquid Waste Disposal
N&H - Nitrogen and Hydrogen system
OTSG - Once Through Steam Generator lateral supports
PC-HVAC - Primary Containment HVAC
RBS - Reactor Building Spray
RCPOC - Reactor Coolant Pump Oil Collection

RCS - Reactor Coolant System - small bore piping
RM - Radiation Monitoring
RVI - Reactor Vessel Internals
SDC - Shutdown Cooling System (Older BWR)
SFCC - Spent Fuel Cooling and Cleanup
SFS - Spent Fuel Storage
SFPC - Spent Fuel Pool Cooling
SGB - Steam Generator Blowdown
SRW - Service Water
SSFDW - SSF drinking water system
SSFDW - SSF Drinking Water
SSFSL - SSF Sanitary Lift
SSFASW - Standby Shutdown Facitlity Auxiliary Service Water
STS - Steam Turbine System
SW - Salt Water
TGCW - Turbine Generator Cooling Water
TSP - Turbine Sump Pump

BWRVIP Program
ACRS Presentation
March 27, 2001

Robin Dyle
Southern Nuclear
Assessment Committee Chairman

Purpose

- Provide a historical review of the BWRVIP program and structure
- Identify the scope of the program and why components were selected
- Identify the attributes of the BWRVIP program that ought to be part of a plant's implementing program
- Overview of the BWRVIP guidelines
- Detailed review of BWRVIP Inspection and Flaw Evaluation Guidelines for the Shroud, Jet Pump, Top Guide and Piping

Historical Perspective

- IGSCC in austenitic piping was a major issue for BWRs in the 1980s
- Potential susceptibility of reactor internals to IGSCC was recognized by EPRI and the BWROG in the 1980s
- Shroud cracking in 1993-1994 confirmed that IGSCC of internals is a significant issue for BWRs
- BWR utility executives formed the BWRVIP in mid-1994 to proactively address BWR reactor vessel and internals material condition issues

BWRVIP Objectives

- Lead industry toward proactive generic resolution of vessel and internals material condition issues
- Identify or develop generic, cost-effective strategies from which each operating plant will select the alternative most appropriate to their needs
- Serve as a focal point for the regulatory interface with the industry in BWR vessel and internals material condition issues (including license renewal)
- Share information among members to obtain useful data from many sources

Capacity Factor Losses in BWRs

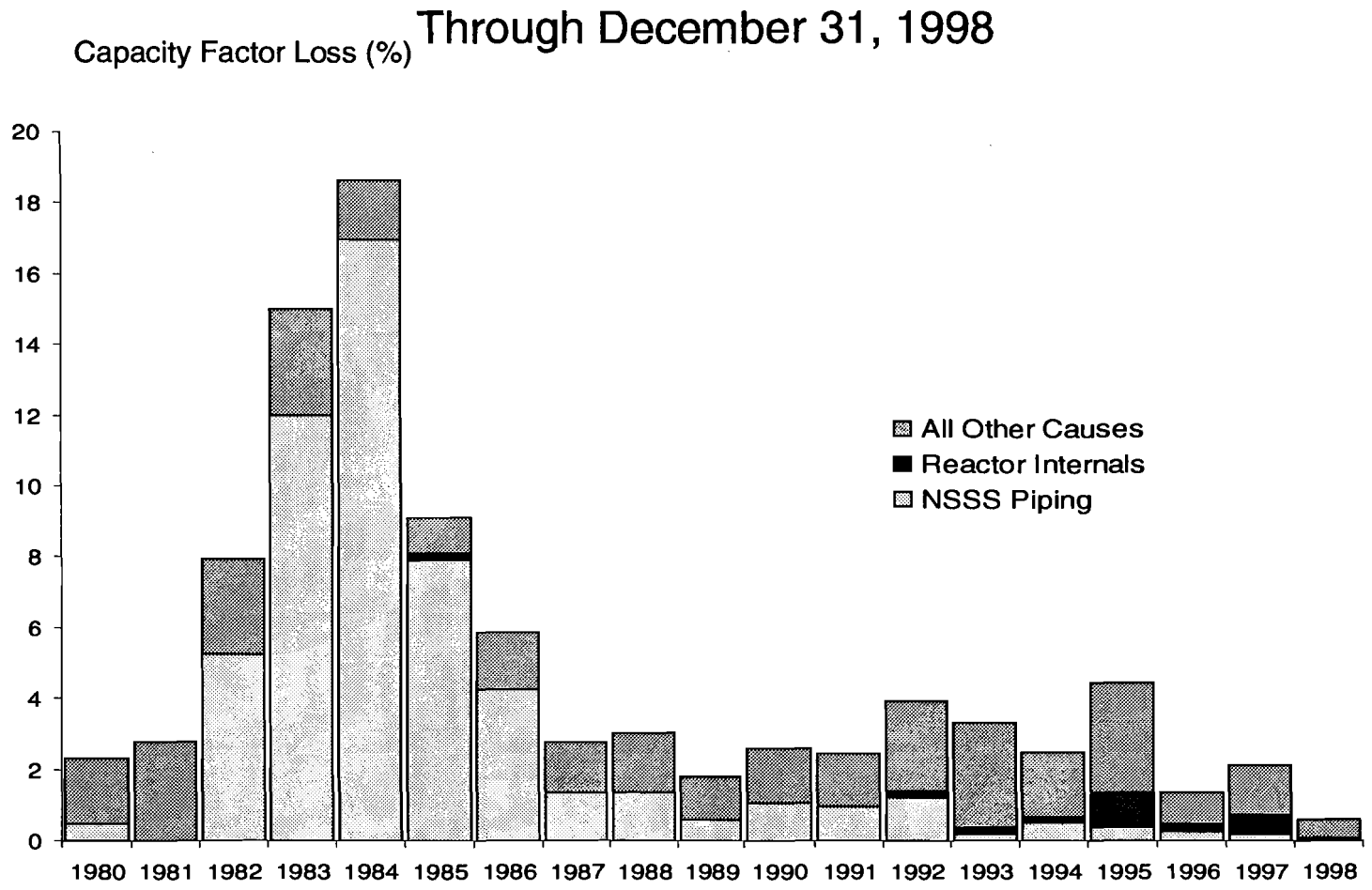

BWRVIP Domestic Plants

- Browns Ferry
- Brunswick
- CGS (WNP-2)
- Clinton
- Cooper
- Dresden
- Duane Arnold
- Fermi
- FitzPatrick
- Grand Gulf
- Hatch
- Hope Creek
- LaSalle
- Limerick
- Monticello
- Nine Mile Point
- Oyster Creek
- Peach Bottom
- Perry
- Pilgrim
- Quad Cities
- River Bend
- Susquehanna
- Vermont Yankee

BWRVIP International Members

- Chubu Electric Power Company
- Chugoku Electric Power Company
- Comision Federal de Electricidad
- Forsmark Kraftgrupp AB
- Iberdrola Generation
- Japan Atomic Power Company
- OKG Aktiebolag
- Tohoku Electric Power Company
- Tokyo Electric Power Company
- Taiwan Power Company

Project Scope

- Vessel and internal components from nozzle inward (with some exceptions)
- BWRVIP safety assessment (BWRVIP-06)
  - Identified components to be addressed
  - Prioritized when components were to be addressed

Core shroud
Shroud support
Core spray internals
Jet pump assembly
Top guide
Core plate

Lower plenum components
Vessel ID brackets
Standby liquid control
LPCI couplings
Instrument penetrations
RPV

BWRVIP guidelines

- **I&E guidelines**
  - What/when to inspect
  - Flaw evaluations
- **NDE guidelines**
  - How to implement inspection methods
- **Repair guidelines**
  - How to repair if necessary
- **Mitigation guidelines** YOU MEAN WATER CHEMISTRY ?
  - Criteria for effective HWC, NMCA, etc.

BWRVIP Organization

BWR Vessel and Internals Project
Organization and Technical Committee Membership

BWRVIP Chairman
Carl Terry, Niagara Mohawk

BWRVIP Vice Chairman
Joe Hagan, Exelon

Task 1
Integration

Executive Chairman
Open

Technical Chairman
Vaughn Wagoner, CP&L
919.546.7959

Steve Brown, Entergy Ops.
Ron Chickering, AmerGen
Rich Ciemiewicz, Exelon
Doug Coleman, Energy NW
Stan Domikaitus, NPPD
Les England, Entergy Ops.
Greg Harttraft, AmerGen
David Hughes, PSEG Nuclear
Jim Kenny, PPL
Carl Larsen, VY
Bruce McLeod, SNOC
Keith Moser, Exelon
Bob Penny, Entergy Nuc. NE
Dave Reyes, First Energy
Aurelio Sala, Iberdrola
Herb Webb, PPL
John Wilson, AmerGen

EPRI Manager
Tom Mulford
650.855.2766

Task 2
Inspection

Executive Chairman
Bill Eaton, Entergy Ops.

Technical Chairman
Carl Larsen, VY
802.258.5915

Dave Anthony, AmerGen
Mike Cross, Entergy Ops.
Charles Garrow, Entergy Nuc. NE
Rick Hambleton, DECo
Tim McClure, NPPD
Rick Nademus, AmerGen
Tony Oliveri, PSEG Nuclear
Gary Park, Alliant
Bob Penny, Entergy Nuc. NE
Doug Ramey, Energy NW
Aurelio Sala, Iberdrola
Joe Schanen, NSP
Dave Schmidt, Exelon
Scott Sienkiewicz, PPL
Ted Siever, NMPC
Harry Smith, Exelon
Joel Whitaker, TVA
Kevin White, SNOC
Blane Wilton, CP&L
Chuck Wirtz, First Energy

EPRI Manager
Greg Selby
704.547.6095

Task 3
Assessment

Executive Chairman
George Vanderheyden, Exelon

Technical Chairman
Rich Ciemiewicz, Exelon
717.456.4026

Jai Brihmadesam, Entergy Ops.
Steve Brown, Entergy Ops.
Robin Dyle, SNOC
Charles Garrow, Entergy Nuc. NE
Dennis Girroir, VY
Rick Hambleton, DECo
Greg Harttraft, AmerGen
Ed Hartwig, TVA
Donna Haviland, First Energy
George Inch, NMPC
Keith Moser, Exelon
Kenneth Neal, Entergy Nuc. NE
Gary Park, Alliant
David Potter, NSP
Doug Ramey, Energy NW
Aurelio Sala, Iberdrola
Randy Schmidt, PSEG Nuclear
David Sun, Exelon
Lew Willertz, PPL
Blane Wilton, CP&L

EPRI Manager
Bob Carter
704.547.6019

Task 4
Mitigation

Executive Chairman
Lewis Sumner, SNOC

Technical Chairman
John Wilson, AmerGen
217.935.4354

Joan Bozeman, CP&L
Bill Burke, Entergy Ops.
Bruce Cummings, DECo
Shashi Dhar, NMPC
Jeff Goldstein, Entergy Nuc. NE
John Grimm, First Energy
Greg Harttraft, AmerGen
Kevin Jepson, NSP
Wendell Keith, Alliant
Larry Lockard, NPPD
Larry Loomis, Entergy Nuc. NE
Dan Malauskas, Exelon
Ralph Maurer, AmerGen
Mark Meltzer, PSEG Nuclear
Mike Metell, VY
David Morgan, PPL
Larry Morrison, Energy NW
Drew Odell, Exelon
Robert Phillips, TVA
Dennis Rickertsen, SNOC
Aurelio Sala, Iberdrola

EPRI Manager
Raj Pathania
650.855.2998

Task 5
Repair

Executive Chairman
George Jones, PPL

Technical Chairman
Bruce McLeod, SNOC
205.992.7446

Enrico Betti, VY
Kim Bezzant, NSP
Roy Corieri, NMPC
John Disney, Energy NW
Bob Geier, Exelon
Gay Haliburton, TVA
Greg Harttraft, AmerGen
Tim McClure, NPPD
Jim O'Sullivan, PPL
Priit Okas, Entergy Nuc. NE
Gary Park, Alliant
Robert Phillips, TVA
Rick Rogoski, First Energy
David Rydman, Entergy Nuc. NE
Aurelio Sala, Iberdrola
Randy Schmidt, PSEG Nuclear
Eric Tschantre, Exelon

EPRI Manager
Ken Wolfe
650.855.2578

Open
BWRVIP Liaison to EPRI Nuclear Power Council

02/23/2001

Assessment Committee Products

- Inspection and flaw evaluation (I&E) guidelines
- Crack growth and fracture toughness reports
- Safety assessment for internal components (BWRVIP-06)
- Component configuration drawings (BWRVIP-15)
- Bounding assessment for RPV integrity (BWRVIP-08/-46)
- Effect of IHSI (BWRVIP-61)
- Revision to GL 88-01 (BWRVIP-75)
- Integrated surveillance program (BWRVIP-78)

I&E Guidelines *1 of 2*

BWRVIP-01 Core Shroud
BWRVIP-05 RPV Inspection
BWRVIP-07 Core Shroud Re-inspection
BWRVIP-18 Core Spray Internals
BWRVIP-25 Core Plate
BWRVIP-26 Top Guide
BWRVIP-27 SLC System/Core Plate ΔP
BWRVIP-38 Shroud Support
BWRVIP-41 Jet Pump Assemblies
BWRVIP-42 LPCI Couplings
BWRVIP-47 Lower Plenum Components (CRD, etc)

I&E Guidelines *2 of 2*

BWRVIP-48 Vessel ID Attachment Welds (Brackets)

BWRVIP-49 Instrument Penetrations

BWRVIP-63 Shroud Vertical Welds

BWRVIP-74 RPV

BWRVIP-76 Comprehensive Core Shroud
(Combines BWRVIP-01, -07, and -63)

Why exclude some components from inspection?

- Safety assessment (BWRVIP-06) performed in 1995 supplemented by simplified PRA (BWRVIP-09)
- Assessment identified components that are necessary for safe operation and shutdown
  - Maintain coolable geometry
  - Maintain rod insertion times
  - Maintain reactivity control
  - Assure core cooling
  - Assure instrumentation availability
- Some components (e.g., feedwater spargers) are not a safety issue

Contents of I&E Guidelines

- Description of component
- Discussion of susceptibility to IGSCC
- Discussion of consequences of failure of each location
- Inspection history
- ***Inspection requirements***
- ***Evaluation methods***
- Reporting requirements

(Note: Format differs somewhat among I&E Guidelines)

Description of components

- Sketches show location of welds, bolted joints, etc.
- Locations labeled (e.g., H-4, RS-1) for identification purposes
- General plant variations shown (BWR/2 vs. BWR/6)
  - In some cases, plant specific configurations shown
- Configuration based on best available design information (BWRVIP-15)

(Note: Owners responsible for verifying configuration to determine applicability of I&E Guidelines)

Sample configuration sketch

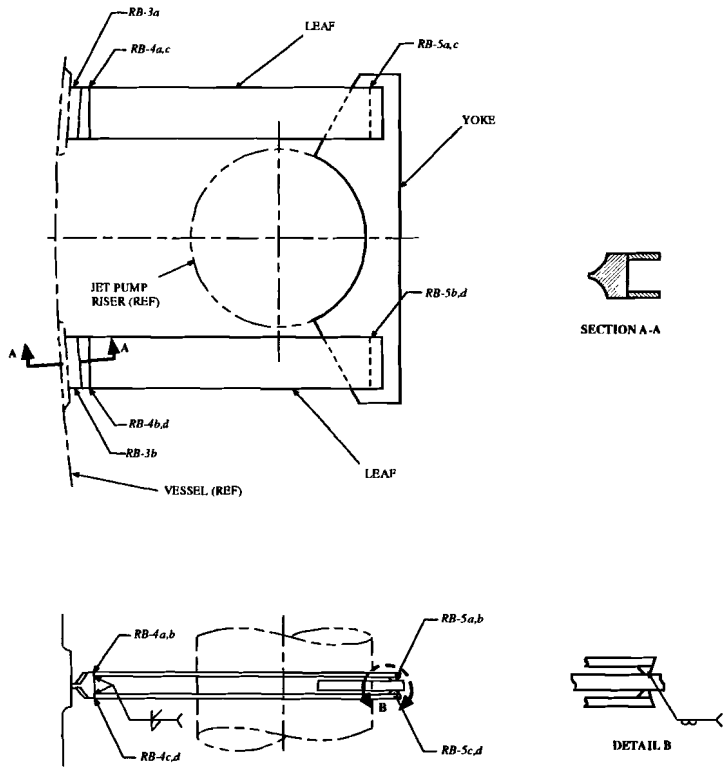

Note 1: Triple Leaf Brace will have additional welds at RB-4 and RB-5
Note 2: This is the Primary Riser Brace at Dresden 2

Figure 2.3.1-3: Typical Secondary Double-Leaf Riser Brace

Susceptibility discussion

- Describes which locations are likely to experience degradation through IGSCC or other mechanisms, and which are not
- Non-susceptible locations do not normally require inspection
- Input to inspection requirements

Consequences of failure

- Discussion of consequences of failure for each location and ability to perform intended function
- Locations not having adverse safety consequences are not required to be inspected
  - Guidelines recommend that there may be economic reasons to inspect additional locations (review GE SILs)
  - Input to inspection requirements

Inspection history

- Review of inspections performed to date and results
- List of indications observed
- Secondary input to inspection requirements

Inspection requirements

- List of locations to inspect
- Schedule for "baseline" inspection and guidance for re-inspection
- Inspection methods (e.g., UT, EVT-1) for each location
- Scope expansion
  - Additional inspections if cracks are found
- Alternatives to inspection
  - Specific repairs or analyses to eliminate inspections

Inspection methods

- I&E Guidelines specify methods for each component
  - EVT-1: visual with 1/2-mil resolution ENHANCED VISUAL
  - VT-1: visual with 1/32-in resolution
  - VT-3: general visual
  - UT: ultrasonic
  - ET: eddy current
- Earlier visual methods (CSVT, MVT-1) eliminated
- Details of methods found in BWRVIP-03

Flaw evaluation

- Describes acceptable procedures for evaluation of flaws found during inspections
  - Structural analysis techniques and, in some cases, equations
  - Assumptions regarding cracking in un-inspected regions
  - Consideration of NDE uncertainty (if applicable)
  - Leakage calculations (if applicable)
  - Limitations on use (e.g., high fluence components require special analytical techniques)
- Crack growth rates from BWRVIP-14 (SS), -59 (nickel base), -60 (LAS), -80 (SS)

Core shroud flaw evaluation flow chart

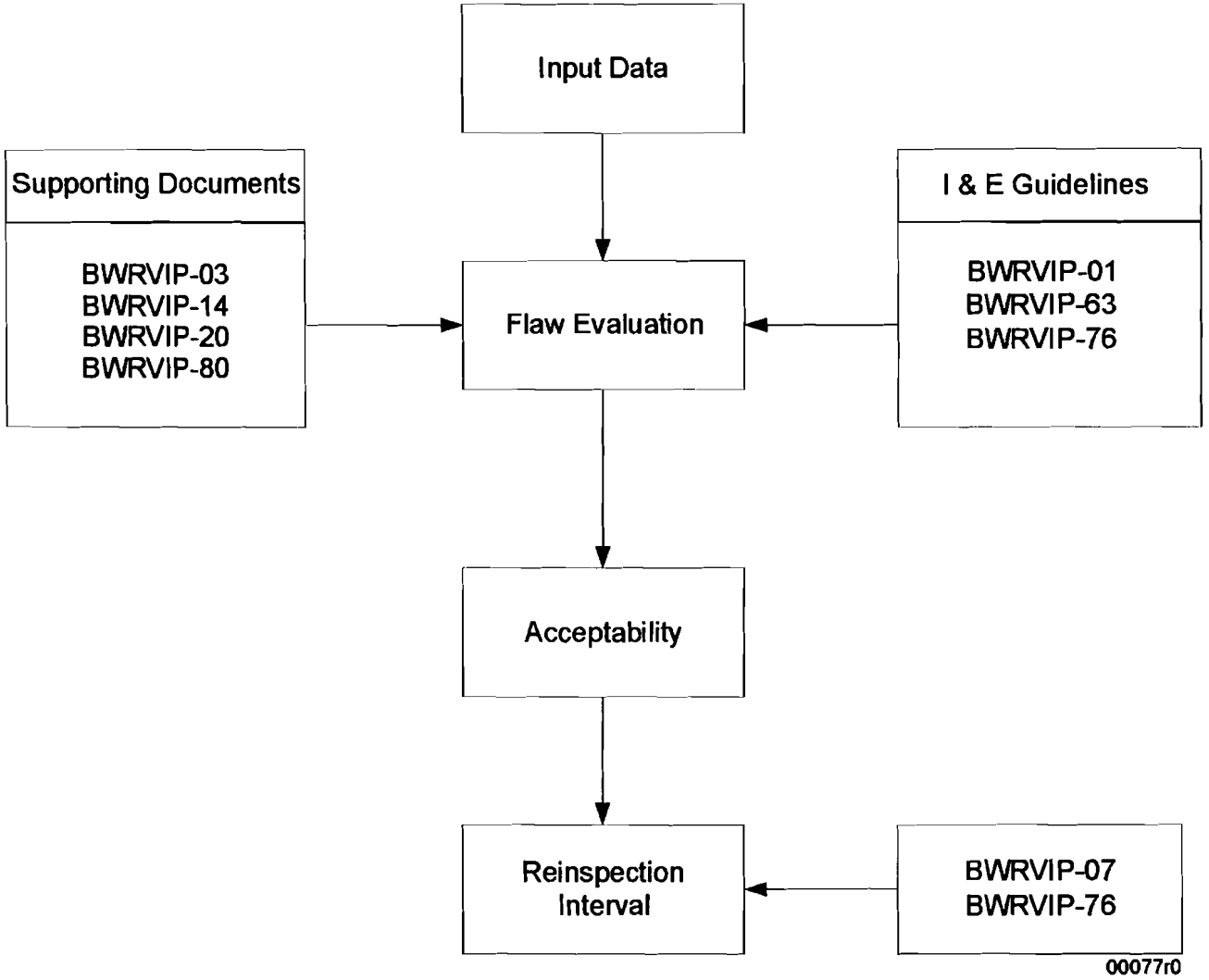

Reporting of inspection data

- I&E Guidelines specify that a summary of inspection results be provided to the BWRVIP subsequent to each outage
  - EPRI compiles summaries and provides to the U.S. NRC semi-annually
- Inspection committee has developed spreadsheets for reporting inspection results
- Facilitates BWRVIP assessment of the program and will identify conditions that might warrant program revisions

Related issues

- Inspection with HWC/NMCA
- BWRVIP-03: NDE Guidelines
- Repair issues
- Interface with ASME Code
- License Renewal

Inspection with HWC/NMCA

- **BWRVIP-62: Technical Basis for Inspection Relief for BWR Internal Components with Hydrogen Injection**
  - Justifies reduced inspections for plants on hydrogen water chemistry
  - Currently under U.S. NRC review
  - The BWRVIP will propose component-specific reduced inspection intervals at a later date

BWRVIP-03: NDE Guidelines

- Detailed description of inspection techniques for each component
- Description of vendor demonstrations performed on mock-ups
- Establishes NDE uncertainty for each demonstration
  - Inclusion of NDE uncertainty in flaw evaluations is currently being discussed with the U.S. NRC
  - NDE uncertainty not considered for determining reinspection intervals
- Updated annually (Rev. 3 current as of 3/01)

What if I have to repair? *1 of 3*

- If flaw evaluations produce unacceptable results, repair may be necessary
- Repairs should comply with BWRVIP repair design criteria
  - Structural requirements, material considerations, fabrication requirements, inspection requirements, etc.
- If significant component degradation is anticipated, procurement of "contingency" repair hardware may be warranted
- May consider justification of operation for a partial cycle to allow time for the design and procurement of a repair

What if I have to repair? *2 of 3*

- **Repair of safety-related internals within the BWRVIP scope must be in compliance with a 10CFR50, Appendix B program**
  - **Repairs may also be required to meet Section XI of the ASME Code, and be reported as required by Section XI (NIS-2 or OAR forms)**
  - **Repair of non-code, safety-related components are to be reported and documented per BWRVIP criteria**

What if I have to repair? *3 of 3*

- **Inspection guidelines may be different than for un-repaired components**
  - **In general, post-repair inspection requirements should be developed by the repair designer**
  - **Some inspection requirements for repaired shrouds are contained in I&E Guidelines (BWRVIP-07 and BWRVIP-76)**

Interface with the ASME Code

- Section XI requires inspection, evaluation and repair of certain components that are also addressed by BWRVIP I&E Guidelines
- U.S. NRC approval of I&E Guidelines does not eliminate any requirements to meet ASME Code commitments
- Two sets of requirements exist (sometimes different)
- Each licensee must seek approval in order to use BWRVIP guidelines in lieu of the ASME Code via 10CFR50.55a
  - The BWRVIP is to develop a template for submittal of a technical alternative

License renewal

- I&E Guidelines technical criteria typically developed without regard to a specific operating period
- Appendices to I&E Guidelines developed to allow utilities to use guidelines for "Demonstration of Compliance with License Renewal Rule"
  - Appendices define any additional inspections or analyses that must be completed to allow applicability of I&E Guidelines beyond 40 years

CONTENTS

- Purpose
- Overview of the BWRVIP guidelines
  - General content
  - Related issues
- Program issues
- Detailed review of BWRVIP Inspection and Flaw Evaluation Guidelines for each component

BWRVIP Program Issues *1 of 2*

- A BWRVIP program is that controlled process used by a licensee to implement the requirements described in the applicable BWRVIP I&E Guidelines, along with supporting BWRVIP documents
- Can be accomplished in a variety of fashions:
  - Special ISI procedures
  - Augmented ISI programs
  - Specifications

BWRVIP Program Issues 2 *of 2*

- The program assures:
  - Inspections performed on time
  - Inspections employ the correct technique
  - Inspections are accomplished by qualified personnel and systems
  - Inspection results and flaws are evaluated properly with the correct methodology
  - Repairs meet the ASME Code or BWRVIP criteria, as applicable
- BWRVIP scope components are safety-related and therefore involve the use of a Quality Assurance program

CONTENTS

- Purpose
- Overview of the BWRVIP guidelines
  - General content
  - Related issues
- Program Issues
- Detailed review of BWRVIP Inspection and Flaw Evaluation Guidelines for Shroud, Jet Pump Assembly, Top Guide and Piping

Format for Detailed Review

- Overview of component configuration sketches
- Inspection history
- Overview of inspection guidelines
  - Baseline
  - Options
  - Scope expansion
  - Re-inspection
- Overview of flaw evaluation
- Status of U.S. NRC review of guidelines (as of August 2000)

Typical Non-BWR/2 Reactor Assembly

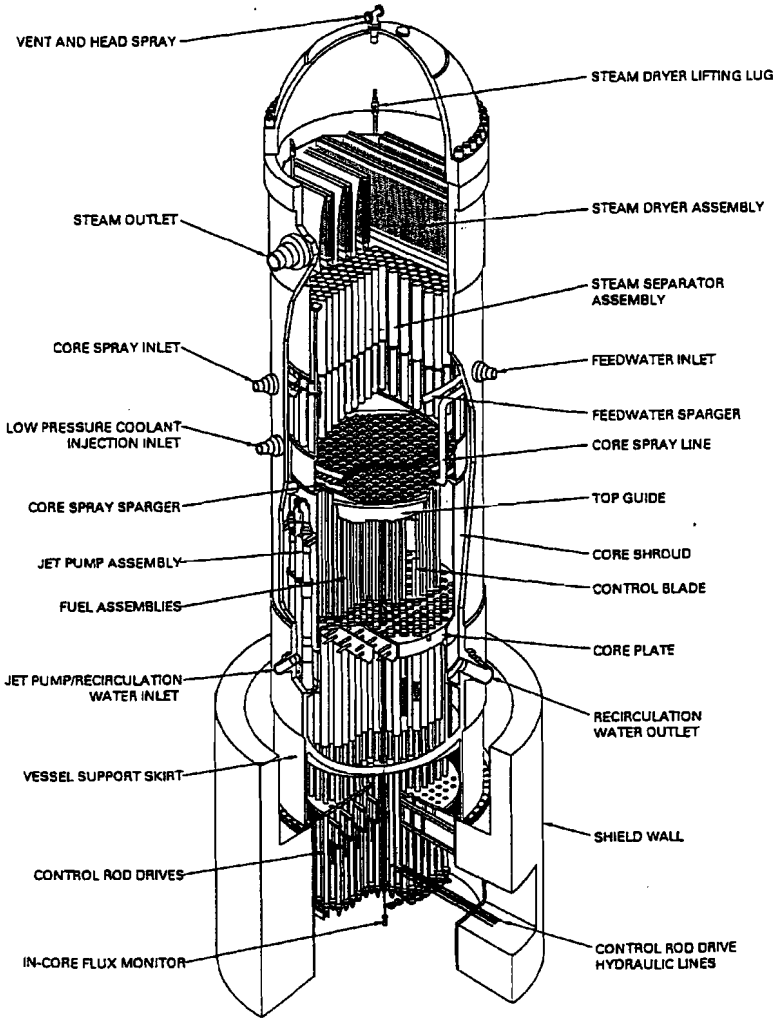

Configuration

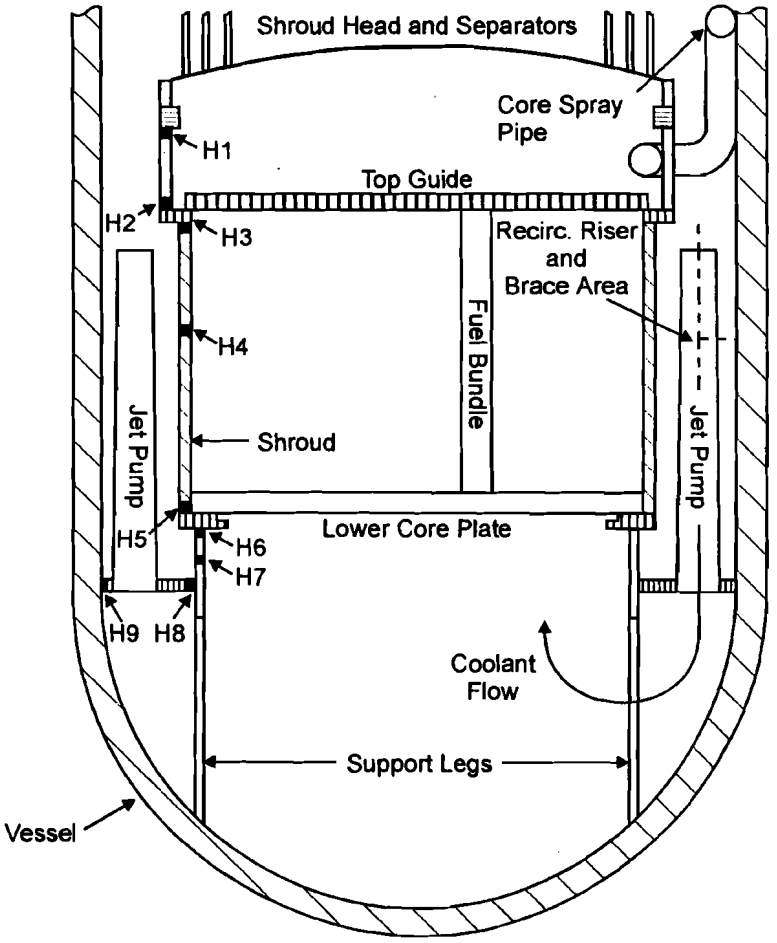

Inspection history

Inspections:

- Most plants have completed inspection of horizontal welds and repair hardware per I&E Guidelines
- Limited inspection of ring segment welds and vertical welds per I&E Guidelines

Findings:

- Significant cracking in horizontal welds
- Some cracking in vertical welds
- Some instances of degraded repair hardware
- One reported indication in ring segment weld

Inspection guidelines *1 of 6*

Unrepaired Core Shroud Classifications

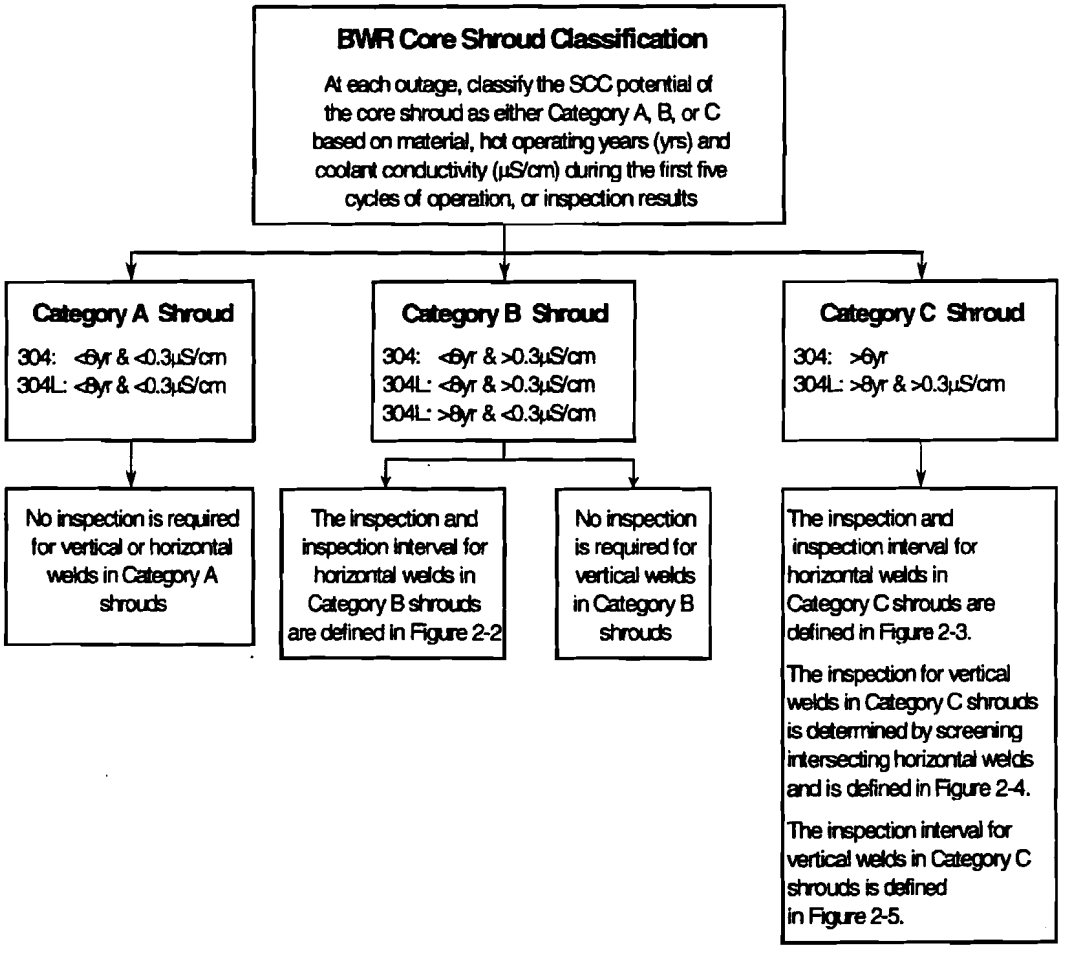

Inspection guidelines *2 of 6*

Inspection Requirements for Category B Shroud Horizontal Welds

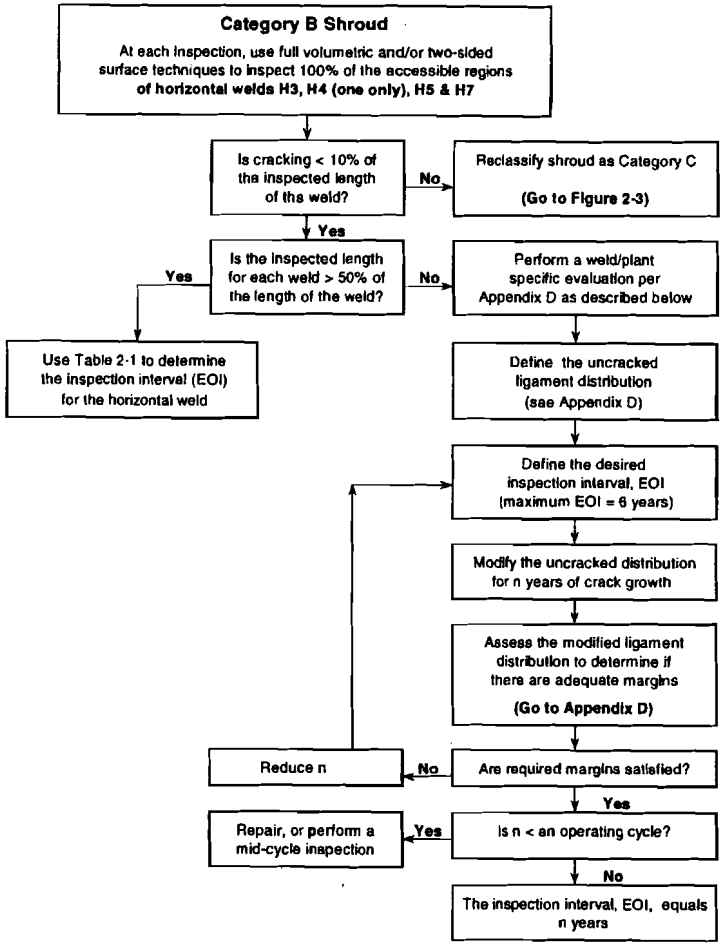

Inspection guidelines *3 of 6*

Inspection Requirements for Category C Shroud Horizontal Welds

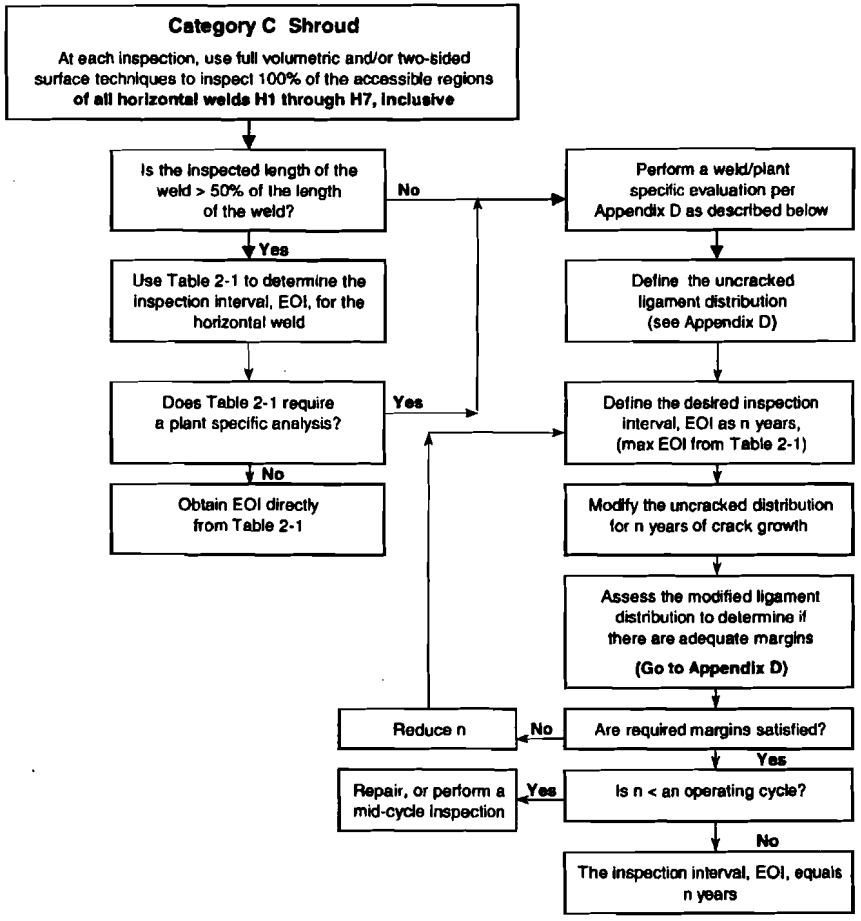

Note: If sufficient inspection cannot be performed to demonstrate Lmin a plant specific analysis (consistent with the approach described in Appendix D) should be performed and submitted to the NRC for review and approval.

Inspection guidelines *4 of 6*

Vertical Weld Inspection Scope Based Upon Screening of Horizontal Welds

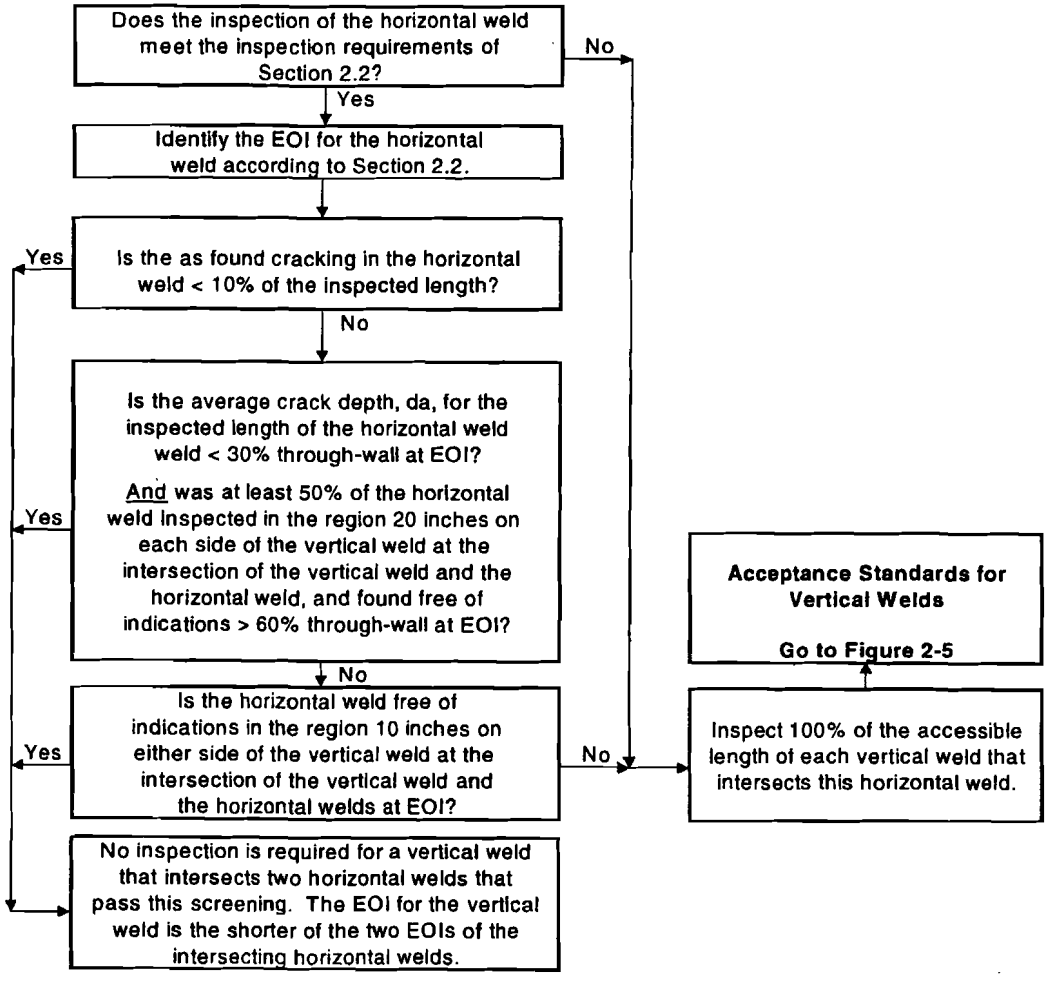

Inspection guidelines *5 of 6*

Inspection Requirements for Vertical Welds

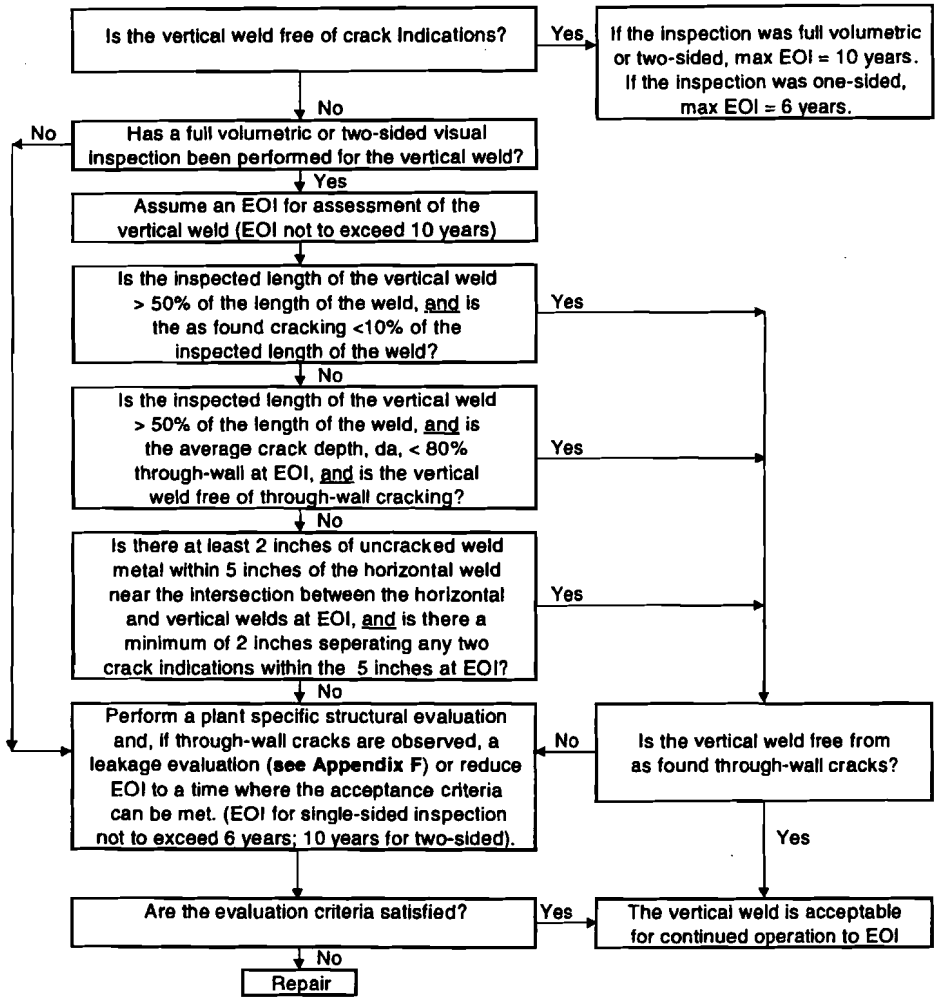

Inspection guidelines *6 of 6*

Reinspection Intervals for Horizontal Welds

Percent Cracking[1, 2]	Stress[3] = 1 ksi		Stress[3] = 3 ksi		Stress[3] = 6 ksi	
	Limit Load	LEFM[4]	Limit Load	LEFM[4]	Limit Load	LEFM[4]
x < 10	10.0	10.0	10.0	10.0	10.0	10
10 ≤ x < 20	10.0	10.0	10.0	10.0	10.0	6.0
20 ≤ x < 25	6.0	6.0	6.0	6.0	6.0	6.0
25 ≤ x < 30	6.0	6.0	6.0	6.0	6.0	Note 6
x ≥ 30	Note 6					

Notes:

1. Length of weld inspected must be at least 50 percent of the weld circumference with either volumetric or two sided surface technique.
2. Cracking is defined as the total length of as-found cracks as a percentage of the total length inspected for each weld. Crack lengths should be rounded up to the next whole number.
3. Stress values are for faulted loading conditions. Interpolation between stress values is acceptable.
4. Applies to welds with cracking ≥ 10 percent where neutron fluence is greater than 3×10^{20} n/cm^2 and less than 5×10^{20} n/cm^2 (E > 1MeV). For fluences exceeding 5×10^{20} n/cm^2, a plant specific analysis is required to be submitted to the NRC.
5. Linear extrapolation of the reinspection intervals is permitted up to a value of 10 ksi. Values should be capped (or rounded down) at values consistent with the approach in the above table.
6. Plant specific analysis is required.

Flaw evaluation

- I&E Guidelines provide generic guidance
  - Other evaluation methods are acceptable
- Evaluation approach based upon fluence at the end-of-evaluation period
- Limit load for ductile material behavior for all components
- LEFM/EPFM for less ductile material behavior
- BWRVIP developed Distributed Ligament Length (DLL) software utilized (BWRVIP-20)
  - Can evaluate actual postulated crack profile

LEFM - Linear Elastic Fracture Mechanics
EPFM - Elastic-Plastic Fracture Mechanics

Status of U.S. NRC review

Review status:

- "BWRVIP-01", Rev.1: SE 1994
- BWRVIP-01, Rev. 2: under U.S. NRC review
- BWRVIP-07: SE 12/99
- BWRVIP-63: under U.S. NRC review
- BWRVIP-76: under U.S. NRC review

Notes:

- U.S. NRC required some revisions to BWRVIP-07; changes are incorporated in BWRVIP-76
- BWRVIP-76 to be comprehensive shroud I&E Guidelines

Configuration

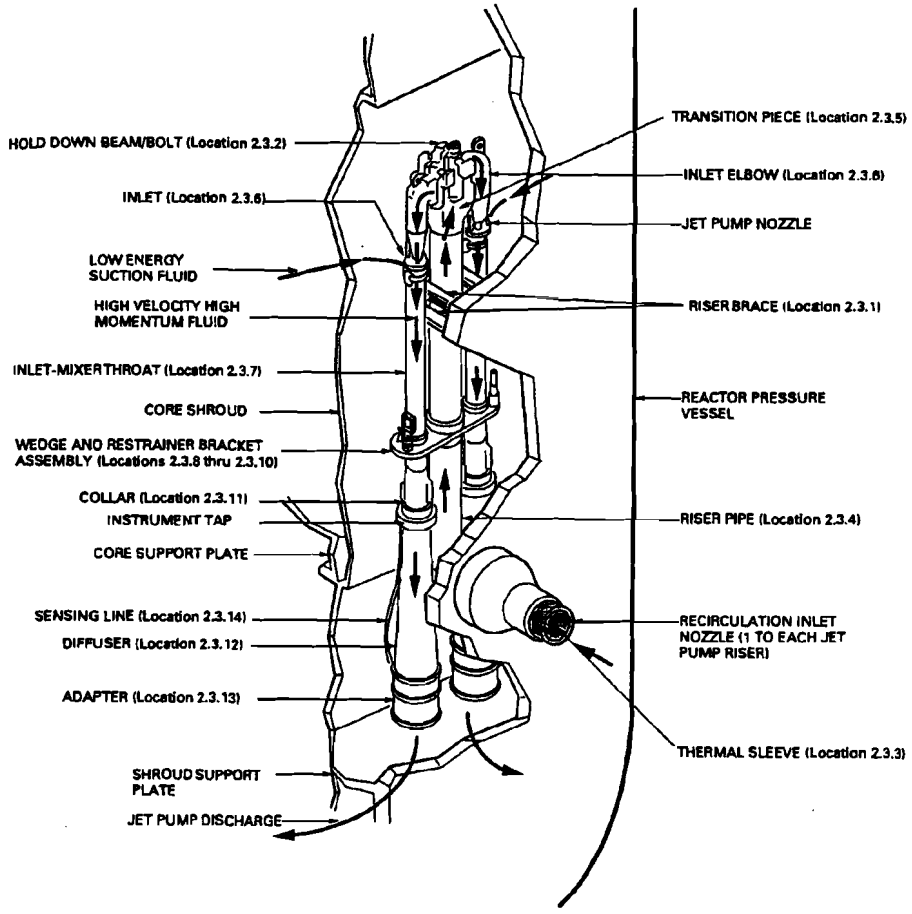

Inspection history

Inspections:

- Significant inspections performed per BWRVIP-41

Findings:

- Indications/degradation reported in:
  - Holddown beams
  - Riser brace welds
  - Riser pipe welds
  - Diffuser welds
  - Riser brace-to-yoke welds
  - Wear at set screws and wedges
  - Instrument lines
  - Set screw tack welds

Inspection guidelines *1 of 3*

- All welds ranked based upon safety significance (High/Medium/Low)
- Inspections not required for non-susceptible locations
- Inspection requirements for susceptible locations based upon ranking and the following charts
- For some components, analysis may alleviate inspection requirements

Inspection guidelines *2 of 3*

Baseline Inspection Requirements

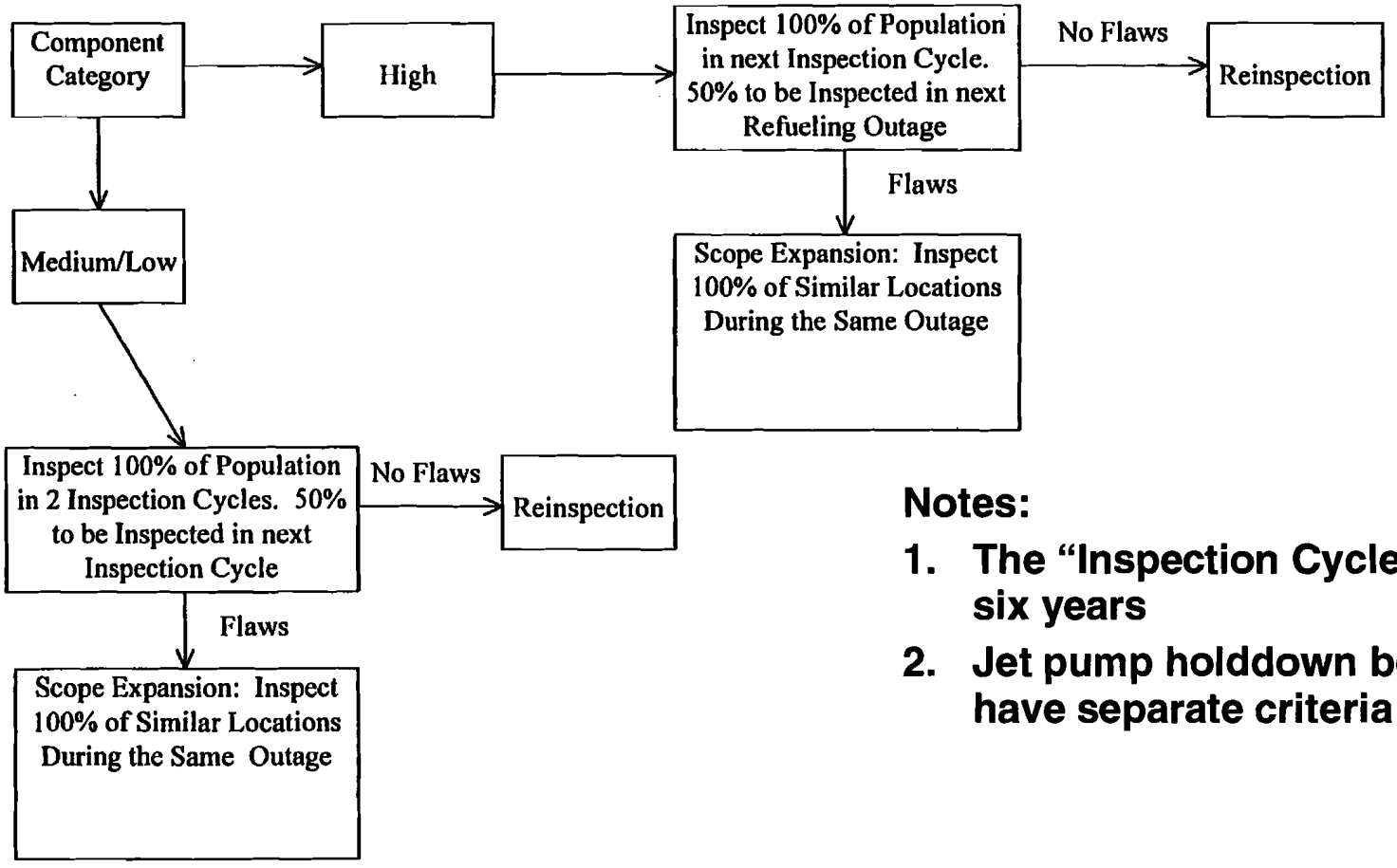

Notes:

1. **The "Inspection Cycle" is six years**
2. **Jet pump holddown beams have separate criteria**

Inspection guidelines *3 of 3*

Reinspection Requirements

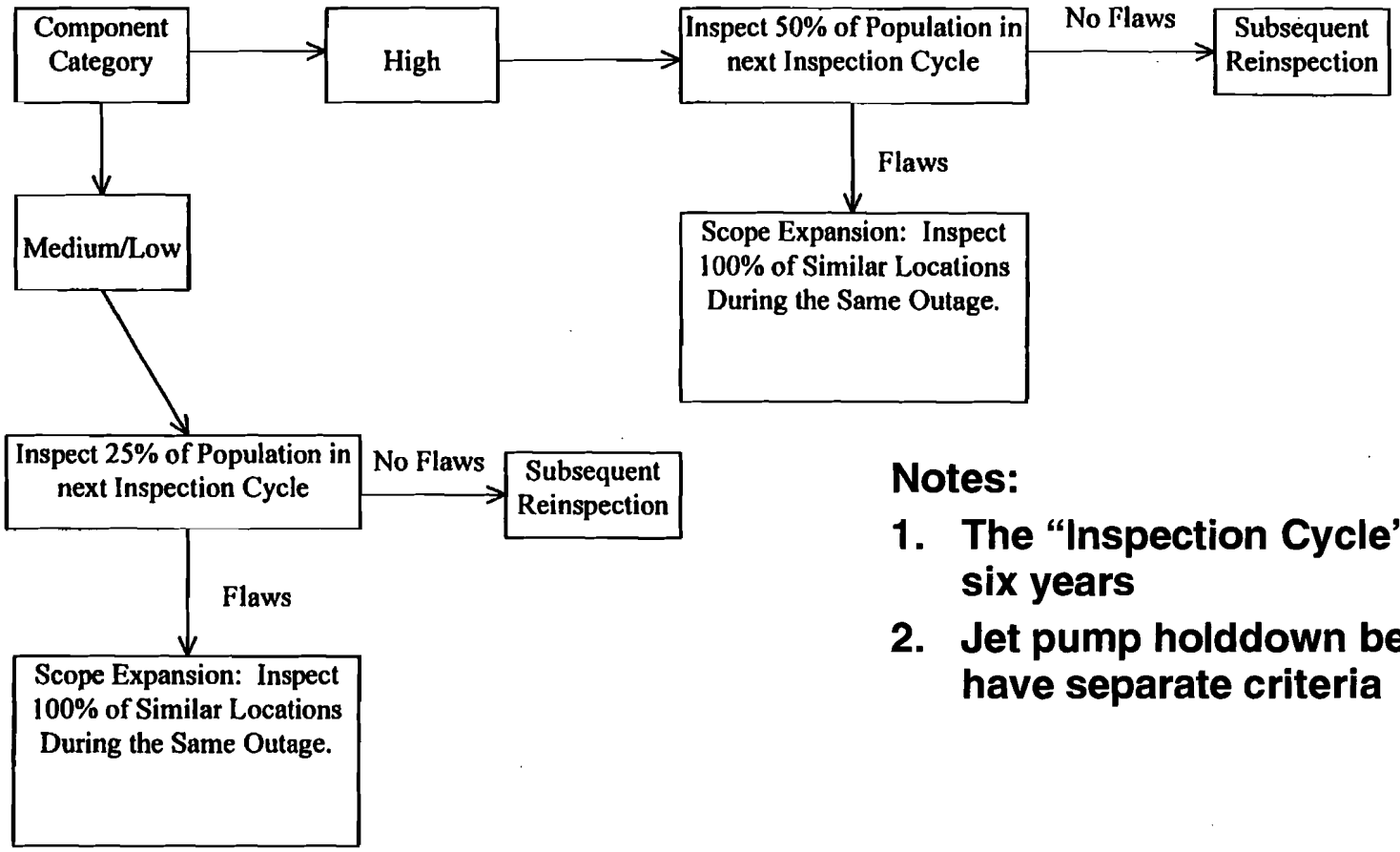

Notes:

1. **The "Inspection Cycle" is six years**
2. **Jet pump holddown beams have separate criteria**

Flaw evaluation

- Limit load techniques utilized for flaw evaluation
- DLL (BWRVIP-20) can be used

Status of U.S. NRC review

Review Status:

- **BWRVIP-41: SE 2/01**

Notes:

- **Guidelines to be revised per SE**

Configurations *1 of 5*

BWR/2, BWR/3, BWR/4, BWR/5 Configuration

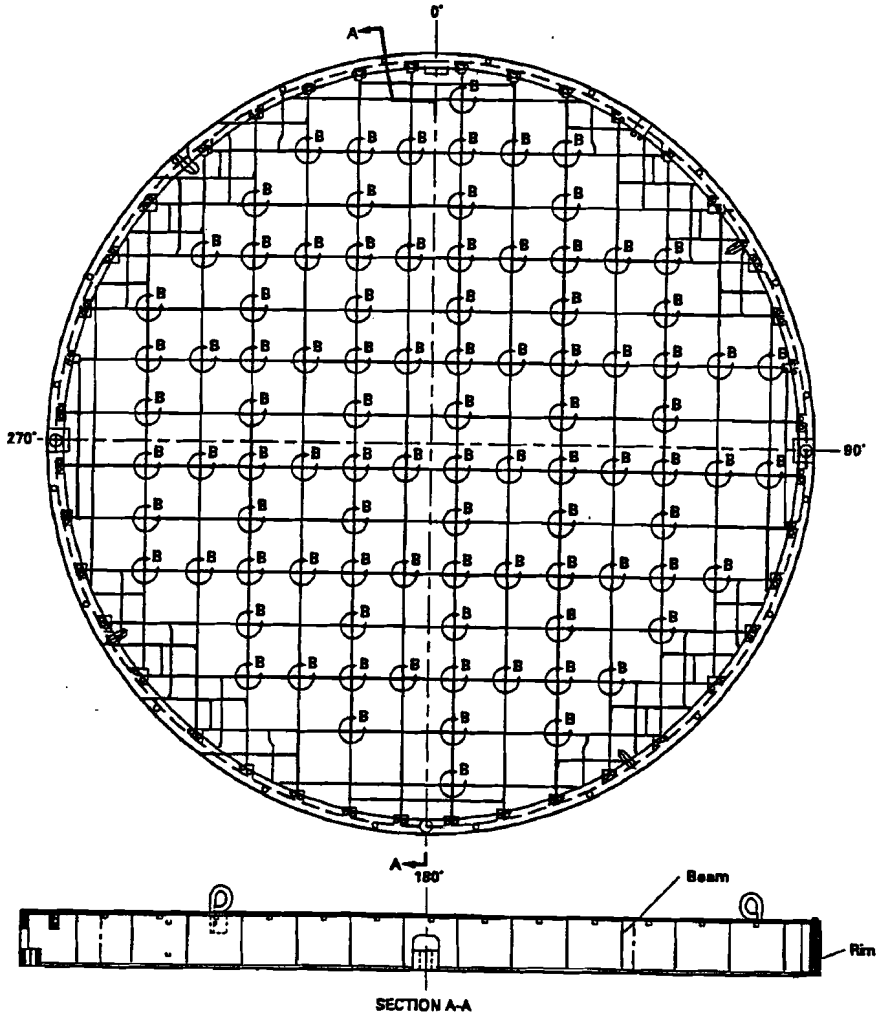

Configurations *2 of 5*

Typical Vertical Aligner Pin Assembly

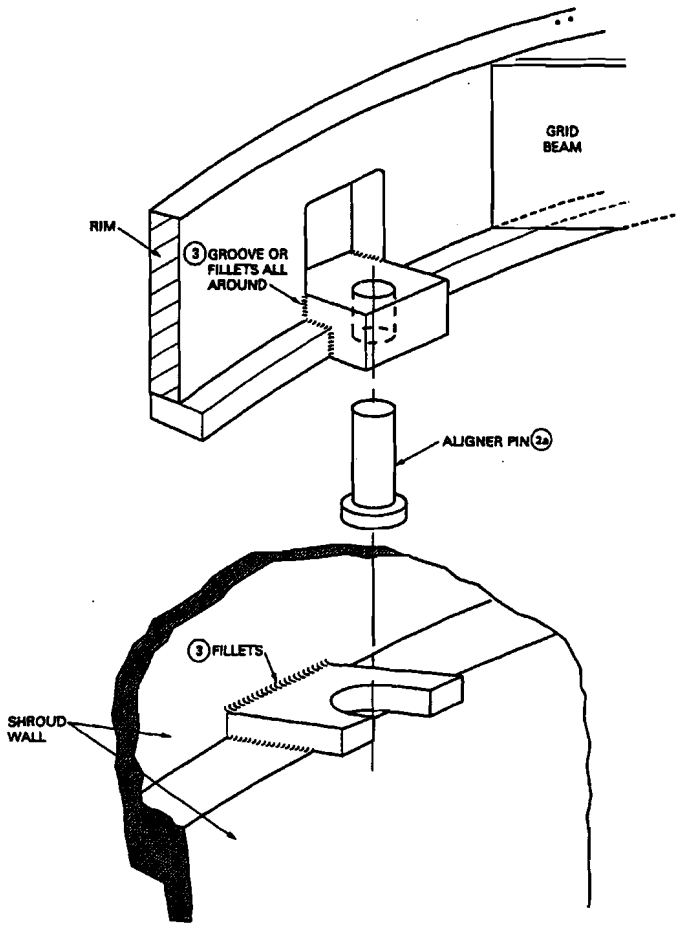

Configurations *3 of 5*

Typical Holddown Assembly

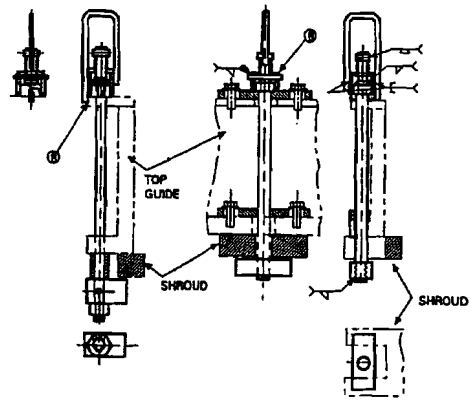

BWR/2-4 HOLD-DOWN DEVICE
(TYP 4 PLACES)

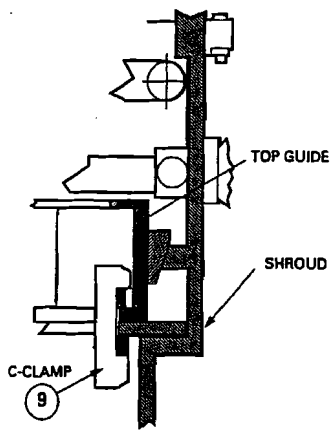

BWR/4,5 HOLD-DOWN DEVICE
(TYP 4 PLACES)

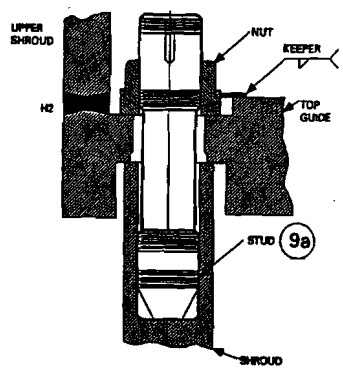

BWR/6 HOLD-DOWN DEVICE
(TYP 84-96 PLACES)

Configurations *4 of 5*

Typical Rim Pins and Rim Welds

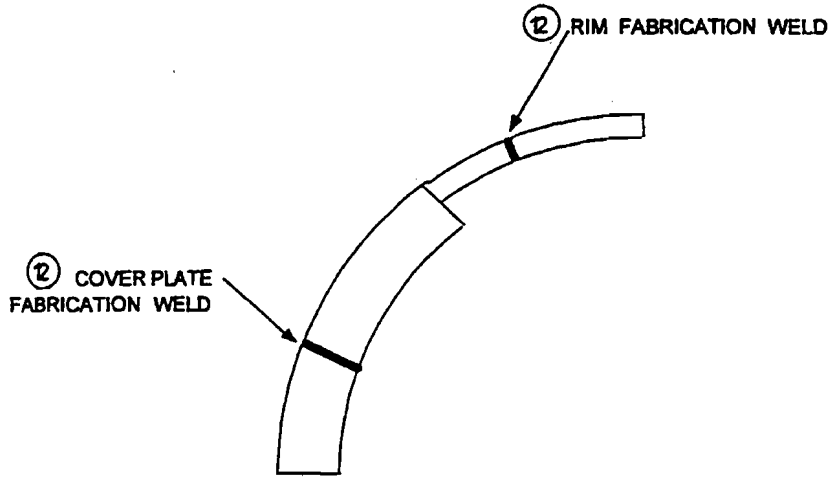

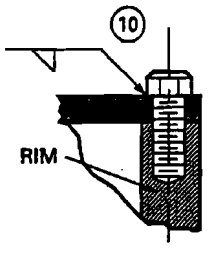

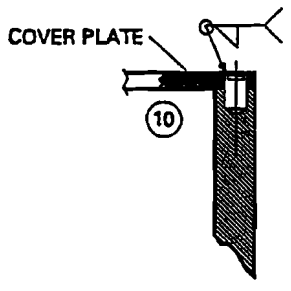

RIM TO COVER PLATE

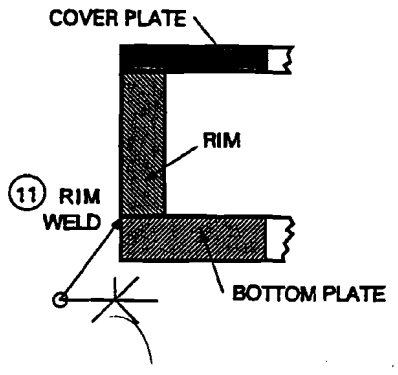

RIM TO BOTTOM PLATE

Configurations *5 of 5*

BWR/6 Configuration

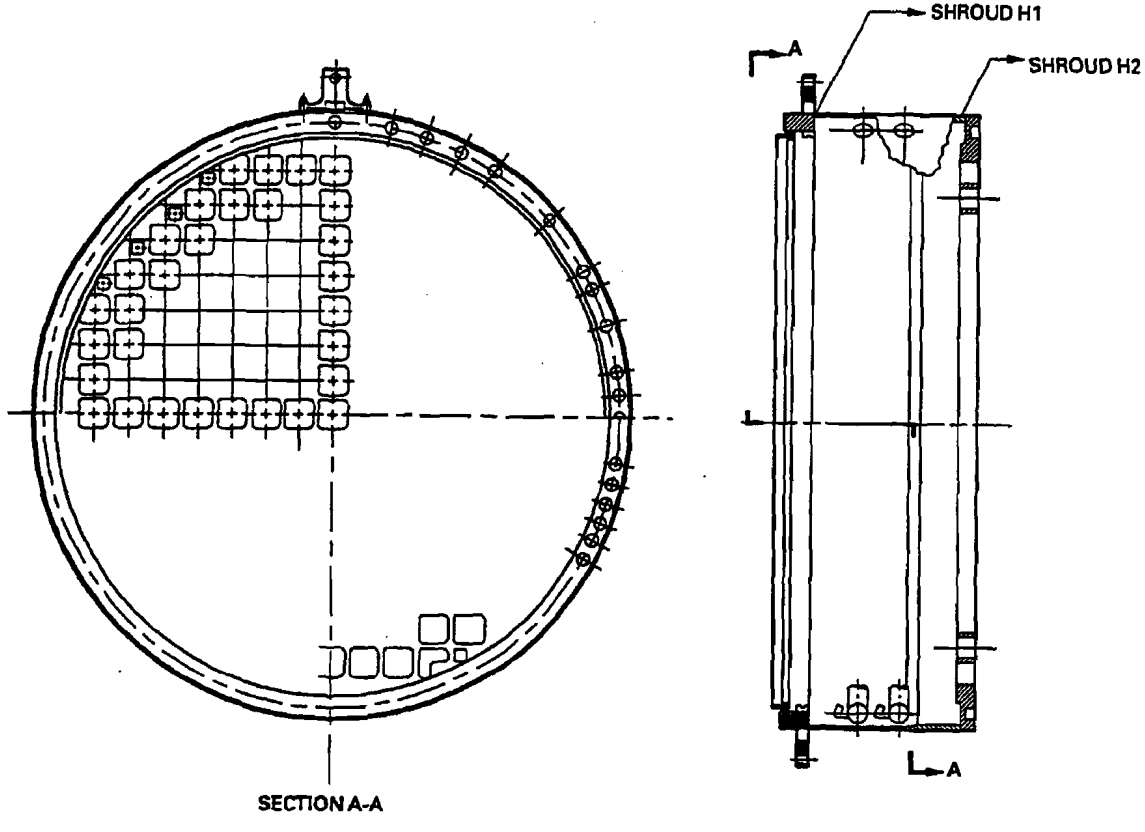

Note: Integral top guide may be more than one plate, connected by a fabrication weld (Location 17)

Inspection history

Inspections:

- Substantial VT-1 and VT-3 inspections per BWRVIP-26 and prior SILs
- UT inspection of grid beams at Oyster Creek

Findings:

- Oyster Creek reported indications in top guide grid beams
- Rim weld cracking in non-GE BWR
- Two indications in tack welds and keepers

Inspection guidelines *1 of 4*

Location	Description	Applicability	Results of Structural Analysis/ Consequence of Failure	Inspection Strategy	Plant-Specific Analysis	Modifications/ Repair
1	Grid Beam and Beam-to-Beam Crevice Slot	BWR/2-5	No safety consequence of single failure at this location. Failure of upper beam has no impact. Failure of lower beam could cause some core instrument damage, but would not interfere with safe shutdown.	None required. (This recommendation will be reevaluated in 1997 after the Oyster Creek UT and sample exam.)	N/A	N/A
2, 3	Aligner Pins and Sockets in Top Guide and Shroud	BWR/2	Aligner hardware is redundant to brackets between the top guide and shroud. The example analysis demonstrates that with complete rim weld cracking, and one of eight brackets failed, the maximum top guide lateral displacement is 0.5".	None required.	N/A	N/A
		BWR/3,4 without wedges	Assuming the lateral reactions are equally shared by two aligners, the maximum shear stress on the pin is less than the allowable in the example analysis. With a minimum socket/block weld size of 0.5", a maximum of 35% of the weld for vertical pins or 70% of the weld for horizontal pins is required to resist shear. With complete aligner failure, and assuming no other means of lateral restraint, the maximum top guide horizontal displacement is limited to about 5 inches by the top guide contacting the upper shroud. Control rods can insert if static displacement is <2.5 in. SLC injection is also available to shut down the reactor.	VT-1 of welds in two adjacent aligner assemblies every other cycle. If cracking is found, expand inspection to all four aligner assemblies.	Analysis to account for plant-specific dynamic loading. Intent to reduce load and reduce % of weld area needed to resist load. If less than 20% of the weld is required, no inspection is needed.	No inspection required if wedges are added.

Inspection guidelines *2 of 4*

Location	Description	Applicability	Results of Structural Analysis/ Consequence of Failure	Inspection Strategy	Plant-Specific Analysis	Modifications/ Repair
8	Hold-down Assemblies	BWR/2-4 devices	With the assumed conservative vertical loading, many of the 206-inch, 12160 pound top guides, if unrestrained during a faulted event scenario, would lift. Plants in this category were designed with hold-down devices. See Appendix A for plant evaluations.	For plants whose faulted vertical loads exceed the top guide weight, a VT-1 inspection where the hold-down latches to the shroud should be done, inspecting two hold-down devices, 180° apart, every other cycle.	For plants whose faulted vertical loads exceed the top guide weight, a plant specific analysis with improved, best estimate LOCA uplift force values may change the conclusion so that inspection would not be required.	No inspection required if a modified hold-down device were installed that was SCC resistant.
9		BWR/4,5 C-clamps	The C-clamps are 316L stainless, welded to the top guide with creviced welds. It is possible, though unlikely, that the C-clamps could work free if the welds to the top guide cracked.	For plants whose faulted vertical loads exceed the top guide weight, a VT-3 inspection of each clamp assembly each 10-year interval is recommended.	Same as above	Same as above
9a		BWR/6 Studs	The studs, numbering 84-96, are highly redundant, and the material in bolting applications has not demonstrated SCC. Inspection can be infrequent and of a general nature to look for gross cracking or total failure of single studs.	VT-3 each 10-year interval.	N/A	N/A

Inspection guidelines 3 of 4

Failure Location	Description	Applicability	Results of Structural Analysis/ Consequence of Failure	Inspection Strategy	Plant-Specific Analysis	Modifications/ Repair
10, 11	Rim Pins and Rim Weld	BWR/2	Even if rim pins or rim weld are failed, lateral loads are transferred to the brackets between the top guide and shroud, so there is no impact on top guide function.	None required.	N/A	N/A
		BWR/3,4 without wedges	The rim pins are captured and perform their function even if the fillet welds that retain them in place fail.	None required for rim pins.	N/A	N/A
			If the rim weld to the bottom plate is assumed to be failed, all lateral load is assumed to transfer to the shroud through the lower reinforcement block pins (4) and the bottom plate. Example analysis assuming a high accident loading shows that plants with dual pins with a diameter less than 0.68" exceed the allowable stress limit. In example analysis of the single pin configuration, all plants exceed the allowable stress limit if the rim weld is assumed to be failed.	Enhanced VT-1 every other cycle of rim weld locations accessible during normal refueling activities. If cracking is found, expand inspection to 25% of one side of the rim weld for qualitative evaluation.	No inspection required if analysis of reinforcement block pins with plant-specific loads shows that lower pin(s) have acceptable stress with the rim weld fully cracked.	No inspection required if wedges are installed between the top guide and shroud.
		BWR/4,5 with wedges	Even if rim pins or rim weld are failed, lateral loads are transferred to the wedges between the top guide and shroud, so there is no impact on top guide function.	None required.	N/A	N/A
12	Rim and Cover Plate Fabrication Welds	BWR/2-5	Because of the redundancy of the grid beams to the rim through the cover and bottom plates, failure of these welds has minimal consequence.	None required.	N/A	N/A

Inspection guidelines *4 of 4*

Failure Location	Description	Applicability	Results of Structural Analysis/ Consequence of Failure	Inspection Strategy	Plant-Specific Analysis	Modifications/ Repair
13	Eye Bolt Boss	BWR/2-5	These components have no function during normal operation, and serve no safety function for off-normal transients.	None required.	N/A	N/A
14	Support Bracket to Shroud Welds	BWR/2	The brackets are captured in place by the combination of small clearance between the top guide and bracket and the fillet welds along the shroud on both sides of the bracket. Since the brackets are loaded in compression against the shroud, they will function even if fillet welds are cracked. Also, there is redundancy in having eight brackets.	None required.	N/A	N/A
15	Threaded Boss to Cover Plate	BWR/2-5	These components have no function during normal operation, and serve no safety function for off-normal transients.	None required.	N/A	N/A
16	Lifting Lug to Rim Bolt or Weld	BWR/2-5	These components have no function during normal operation, and serve no safety function for off-normal transients.	None required.	N/A	N/A
17	Integral Top Guide Fabrication Welds	BWR/6	Since the BWR/6 top guide is single piece construction, the worst consequence of weld cracking in the typical fabrication is that cracking in both HAZs could cause a small piece, containing the weld, to fall out of the top guide onto the core plate. The top guide would still perform its function in this case, and the failure would be observable while moving fuel bundles during the next refueling activity.	None required for typical fabrication	Determine from fabrication records, if available, that top guide plate welds are arranged as described here, or comparably.	N/A

Flaw evaluation

- For flaw evaluation of the grid beams, linear elastic fracture mechanics techniques are used
  - Equations given in Appendix B of BWRVIP-26
- For other locations, specific flaw evaluation methods are not defined
- Evaluations of components other than grid beams based upon stress analyses

Status of U.S. NRC review

Review Status:

- **BWRVIP-26: SE 9/99**

Notes:

- **Guidelines to be revised per SE**

BWRVIP-75: IGSCC in BWR piping
IGSCC History

- 1960s: Scattered Incidents of IGSCC
- Mid - 70s: Small diameter piping IGSCC association with weld residual stresses
- Late - 70s: Larger diameter piping IGSCC
- Mid - 80s: IGSCC in 304Land 316L in creviced locations and areas of cold work

BWRVIP-75: IGSCC in BWR piping, History of Industry Response

- Collaboration on remedy development
  - BWR Owners Group for IGSCC Research
  - BWROG I 1979-1983; BWROG II 1984-1988.
  - New developments and adopted innovations
- Plant-specific decisions on remedy selection varied
  - Full or partial piping system replacements
  - Local repair and augmented inspection
  - Local mitigation and augmented inspection
- Regulatory guidance on remedy implementation
  NUREG-0313 Revision 2, 1988

BWRVIP-75: IGSCC in BWR piping, NUREG-0313, Rev. 2 categories

Category	Weld Description	Inspection Frequency
A	Resistant materials	25% sample every 10 years (Same as Code)
B	Non-resistant materials stress improved within 1st 2 years of operation	50% every 10 years (at least 25% in 6 years)
C	Non-resistant materials stress improved after 2 years of operation	Once within 2 cycles of stress improvement then once per every 10 years
D	Non-resistant materials, no stress improvement	100% every 2 refueling cycles
E	Cracked - reinforced by weld overlay or mitigated by stress improvement	Every 2 refueling cycles
F	Cracked – Inadequate or no repair	Every refueling outage
G	Non-resistant, not inspected	Next outage

BWRVIP-75: IGSCC in BWR piping, IGSCC control strategies implemented

- Detect IGSCC before damage compromises system integrity
- Remove found defects before continued growth compromises system integrity
- Prevent initiation by introducing a resistant material
- Maintain structural integrity and prevent unacceptable growth by reinforcing with a resistant material
- Prevent initiation by modifying the residual stress distribution
- Prevent further growth by modifying the residual stress distribution
- Slow initiation and growth using improved water chemistry

BWRVIP-75: IGSCC in BWR piping, Reasons to revise NUREG-0313

- Since 1984, losses in capacity factor have been dramatically reduced
- IGSCC countermeasures are effective
  - Inspections are confirming little or no new crack initiation and growth in existing cracks
- Inspections result in radiation dose to personnel
  - Minimize inspections, particularly those that do not have an impact to safety

BWRVIP-75: IGSCC in BWR piping, BWRVIP Approach

- All piping categories evaluated for appropriate changes to inspection frequencies
- Service experience and deterministic evaluations used to evaluate performance
  - Inspection results
  - Effectiveness of HWC and NMCA
  - Effectiveness of IHSI and MSIP
  - BWRVIP crack growth studies for stainless steel and nickel-base alloys
- Generic risk-informed studies used to support the technical basis for new inspection frequencies

BWRVIP-75: IGSCC in BWR piping, GL88-01 vs. BWRVIP-75 Inspections

Category	Weld Description	Existing Inspection Frequency of GL 88-01	Proposed Inspection Frequency per BWRVIP-75	
			NWC	HWC
A	Resistant Materials	25% every, 10 years at least 12% in 1st 6 years	B-F = 25% every 10 years B-J = 10% every 10 years	10% every 10 years,
B	Non-Resistant Materials Stress Improved within 1st 2 years of Operation	50% every 10 years at least 25% in 1st 6 years	25% every 10 years	10% every 10 years
C	Non-Resistant Materials Stress Improved after 2 years of Operation	All within 2 cycles of SI, then all within 10 years, at least 50% within 1st 6 years	25% every 10 years	10% every 10 years
D	Non-Resistant Materials, No Stress Improvement	Every 2 refueling Cycles	100% every 6 years	100% every 10 years, at least 50% in 1st 6 years
E	Cracked – Reinforced by Weld Overlay	Every 2 refueling Cycles	25% every 10 years	10% every 10 years
	Cracked – Mitigated by Stress Improvement	Every 2 refueling Cycles	100% every 6 years	100% every 10 years, at least 50% in 1st 6 years
F	Cracked – Inadequate or No Repair	Every Refueling Outage	Every Refueling Outage	Every Refueling Outage
G	Non-Resistant, Not Inspected	Next Outage	Next Outage	Next Outage

BWRVIP-75: IGSCC in BWR piping, Conclusions and Status

- NRC requirements and IGSCC countermeasures have been effective in managing IGSCC
- A revision of the inspection frequencies in NUREG-0313 is warranted and justified based on BWRVIP-75
- NRC has issued safety evaluation
- BWRVIP developing responses to address open items in safety evaluation

Conclusion

- The BWRVIP has developed a program that is broad in scope
- The BWRVIP Program includes the appropriate elements including inspection, evaluation, repair and mitigation to assure reactor internals integrity
- Use of the BWRVIP Program during the period of a renewed license provides an adequate aging management program

BWRVIP Reports Applicability to License Renewal

ACRS Briefing
March 27, 2001

C. E. Carpenter, Jr.
Materials & Chemical Engineering Branch
Office of Nuclear Reactor Regulation

BWRVIP and License Renewal

Agenda

- Overview of BWRVIP Program
- Staff's Review of BWRVIP Reports
  - Current Operating Period
  - BWRVIP Generic Aging Management Plans
  - Reports Supporting BWRVIP Generic AMP
- Specific Examples
- Conclusions

Overview of BWRVIP Program

Staff's Perspective

- BWRVIP is a Voluntary Industry Initiative
  - Program Began in 1994 to Address GL 94-03 Core Shroud Cracking Issues
  - Program Now Addresses All BWR Internal Components, Reactor Vessel, and Class I Piping
  - Program Covers Current Operating Term and Extended Operating Period
- BWRVIP Proactively Addressing Aging Degradation Issues That are Beyond Regulatory Requirements

Overview of BWRVIP Program

Staff's Perspective (con't.)

- Staff is Reviewing BWRVIP Submittals
  - 15 Inspection & Flaw Evaluation Guidelines
  - 13 Repair / Replacement Design Criteria
  - 4 Crack Growth Mitigation Guidelines
  - 22 Other Supporting Reports
  - 12 License Renewal Appendices
- Staff Expects to Finish Reviews by 12/2001
  - This is Dependent on Timeliness and Technical Adequacy of BWRVIP Responses to Staff RAIs and SE Open Items

Overview of BWRVIP Program

Industry's Perspective

- Presentation by Robin Dyle
  - Technical Chair, Assessment Committee

Staff's Review of BWRVIP Reports

Current Operating Period

- Staff Has Completed Review of Almost All BWRVIP Reports
  - Staff Has Concluded that Implementation of BWRVIP Guidelines, as Modified to Address Staff Comments, Will Provide an Acceptable Level of Quality for Inspection and Flaw Evaluation of Subject Safety-Related Components
  - Independent RES Review (NUREG/CR-6677) Found That Comprehensive Inspection Programs Like BWRVIP Significantly Reduces Core Damage Frequency

Staff's Review of BWRVIP Reports

BWRVIP Generic Aging Management Plans

- Staff Completing Review of BWRVIP LR Appendices and Has Found That:
  - Referencing BWRVIP AMPs and Completing Action Items Will Provide Reasonable Assurance that Applicant Will Adequately Manage Aging Effects During Extended Operation Period
  - Generic AMPs Usage Will Significantly Reduce Staff Review of LR Applications

Staff's Review of BWRVIP Reports

BWRVIP Generic Inspection Guidelines & AMPs

- BWRVIP Inspection and Flaw Evaluation (I&E) Guidelines
  - BWRVIP-18, Core Spray Internals I&E Guideline
  - BWRVIP-25, Core Plate I&E Guideline
  - BWRVIP-26, Top Guide I&E Guideline
  - BWRVIP-27, Standby Liquid Control System / Core Plate ΔP I&E Guideline
  - BWRVIP-38, Shroud Support I&E Guidelines

Staff's Review of BWRVIP Reports

BWRVIP Generic Inspection Guidelines & AMPs

- BWRVIP I&E Guidelines (con't)
  - BWRVIP-41, BWR Jet Pump Assembly I&E Guidelines
  - BWRVIP-42, BWR LPCI Coupling I&E Guideline
  - BWRVIP-47, BWR Lower Plenum I&E Guideline
  - BWRVIP-48, Vessel ID Attachment Weld I&E Guideline
  - BWRVIP-49, Instrument Penetration I&E Guidelines

Staff's Review of BWRVIP Reports

BWRVIP Generic Inspection Guidelines & AMPs

- BWRVIP I&E Guidelines (con't)
  - BWRVIP-74, BWR Reactor Pressure Vessel I&E Guideline
    - Subsumes BWRVIP-05, BWR RPV Shell Weld Inspection Recommendations
  - BWRVIP-76, BWR Core Shroud I&E Guidelines
    - Subsumes BWRVIP-07, Guidelines for Reinspection of BWR Core Shrouds, and BWRVIP-63, Shroud Vertical Weld Inspection and Evaluation Guidelines, and supported by BWRVIP-80, Evaluation of Crack Growth in BWR Shroud Vertical Welds

Staff's Review of BWRVIP Reports

Reports Supporting BWRVIP Generic AMP

- Additional BWRVIP Reports
  - BWRVIP-75, Technical Basis for Revisions to Generic Letter 88-01 Inspection Schedules (NUREG-0313)
    - supported by BWRVIP-61, BWR Vessel and Internals Induction Heating Stress Improvement Effectiveness on Crack Growth in Operating Plants
  - BWRVIP-78, BWR Integrated Surveillance Program
    - Supported by BWRVIP-86, BWR ISP Implementation Plan

Staff's Review of BWRVIP Reports

Reports Always Applicable

- Repair / Replacement Design Criteria
  - Supported by BWRVIP-90, Interim Welding Guidelines for BWR Internals
  - BWRVIP-16, Internal Core Spray Piping and Sparger Replacement Design Criteria
  - BWRVIP-19, Internal Core Spray Piping and Sparger RDC
  - BWRVIP-34, Technical Basis for Circumferential Weld Overlay Repair of Vessel Internal Core Spray Piping

Staff's Review of BWRVIP Reports

Reports Always Applicable (con't.)

- Repair / Replacement Design Criteria
  - BWRVIP-44, Underwater Weld Repair of Nickel Alloy Reactor Vessel Internals
  - BWRVIP-45, Weldability of Irradiated LWR Structural Components
  - BWRVIP-50, Top Guide / Core Plate RDC
  - BWRVIP-51, Jet Pump RDC
  - BWRVIP-52, Shroud Support and Vessel Bracket RDC

Staff's Review of BWRVIP Reports

Reports Always Applicable (con't.)

- Repair / Replacement Design Criteria
  - BWRVIP-53,Standby Liquid Control Line RDC
  - BWRVIP-55,Lower Plenum RDC
  - BWRVIP-56,LPCI Coupling RDC
  - BWRVIP-57,Instrument Penetrations RDC
  - BWRVIP-58,CRD Internal Access Weld RDC

Staff's Review of BWRVIP Reports

Reports Always Applicable (con't.)

- Mitigation Reports
  - Supported by BWRVIP-29, BWR Water Chemistry Guidelines - 1996 Rev., and BWRVIP-79, BWR Water Chemistry Guidelines - 2000 Rev.
  - BWRVIP-14, Evaluation of Crack Growth in BWR Stainless Steel RPV Internals
    - supported by BWRVIP-66, Review of Test Data for Irradiated Stainless Steel Components
  - BWRVIP-59, Evaluation of Crack Growth in BWR Nickel-Base Austenitic Alloys in RPV Internals

Staff's Review of BWRVIP Reports

Reports Always Applicable (con't.)

- Mitigation Reports
  - BWRVIP-60, Evaluation of Crack Growth in BWR Low Alloy Steel RPV Internals
  - BWRVIP-62, Technical Basis for Inspection Relief for BWR Internal Components with Hydrogen Injection
    - Supported by BWRVIP-66

Staff's Review of BWRVIP Reports

Reports Always Applicable (con't.)

- Other Supporting BWRVIP Reports
  - BWRVIP-03, RPV Internals Examination Guidelines
  - BWRVIP-06, Safety Assessment of BWR Reactor Internals
    - supported by BWRVIP-09, Quantitative Safety Assessment of BWR Reactor Internals

Specific Examples

BWRVIP-76, BWR Core Shroud I&E Guidelines

- Staff is Reviewing Proposed Guidance
  - Incorporates BWRVIP-07, Guidelines for Reinspection of BWR Core Shrouds, and BWRVIP-63, Shroud Vertical Weld Inspection and Evaluation Guidelines, and supported by BWRVIP-80, Evaluation of Crack Growth in BWR Shroud Vertical Welds

Specific Examples

BWRVIP-76, BWR Core Shroud I&E Guidelines (con't.)

- Guidelines Propose:
  - Weld Inspection Strategy in Un-Repaired Shrouds
  - Weld Inspection Strategy in Repaired Shrouds
  - Inspection & Evaluation Reporting Requirements
  - Demonstration of Compliance with LR Rule
- Guidelines Incorporate Previous Staff SE Comments on BWRVIP-07 & -63
  - Staff Working with BWRVIP to Resolve Interpretation Issues

Specific Examples

BWRVIP-41, BWR Jet Pump Assembly I&E Guidelines

- Staff is Completing Review
- Specific Findings
  - Scope of Program
    - Provides Component Description and Function; Describes Susceptibility Factors; Discusses Potential Failure Locations and Safety Consequences; Describes Service Background and Inspection History; Provides Proposed Inspection Guidelines; and Describes Loadings.

Specific Examples

BWRVIP-41, Jet Pump Assembly I&E Guidelines (con't)

- Specific Findings
  - Scope of Program
    - Results of RES Program Will Be Used to Evaluate Need for Additional Inspections of CASS Jet Pump Assemblies in Renewal Period and to Modify Inspection Scope and Frequency, as Needed.
  - Preventive Actions
    - Maintaining High Water Purity Reduces SCC Susceptibility and HWC / NMCA Reduces it Further.

Specific Examples

BWRVIP-41, Jet Pump Assembly I&E Guidelines (con't)

- Specific Findings
  - Parameters Monitored or Inspected
    - Inspections and Flaw Evaluations Performed in Accordance with Staff-Approved BWRVIP Guidelines. Examination Expansion and Re-inspection Beyond Baseline Inspection Required If Flaws Are Detected.
  - Detection of Aging Effects
    - Inspections Performed in Accordance with Staff-Approved BWRVIP Guidelines Will Ensure That Aging-Related Degradation Detected Before Any Loss of Intended Function Occurs.

Specific Examples

BWRVIP-41, Jet Pump Assembly I&E Guidelines (con't)

- Specific Findings
  - Monitoring and Trending
    - Inspection Schedules in Accordance with BWRVIP Guidelines Ensures Timely Detection of Cracks. Scope of Examination Expansion and Re-inspection Beyond Baseline Inspection Required If Flaws Are Found.
  - Acceptance Criteria
    - Degradation Is Evaluated in Accordance with Approved BWRVIP Guidelines.

Specific Examples

BWRVIP-41, Jet Pump Assembly I&E Guidelines (con't)

- Specific Findings
  - Corrective Actions
    - Corrective Action Proposed in BWRVIP RDC Has Been Reviewed and Approved with Several Open Items.
  - Operating Experience
    - Instances of Cracking Have Occurred in Jet Pump Assemblies (Bulletin 80-07) Hold down Beam (IN 93-101, and Jet Pump Riser Pipe Elbows (IN 97-02).

Specific Examples

BWRVIP-26, Top Guide I&E Guideline

- Staff Has Completed Review
- Specific Findings
  - Scope of Program
    - Provides Component Description and Function; Describes Susceptibility Factors; Discusses Potential Failure Locations and Safety Consequences; Describes Service Background and Inspection History; Provides Proposed Inspection Guidelines; and Describes Loadings.

Specific Examples

BWRVIP-26, Top Guide I&E Guideline (con't)

- Specific Findings
  - AMP's 10 Elements Findings Similar to BWRVIP-41 Review
    - Operating Experience: IN 95-17 Discusses Cracking in Top Guides of U.S. and Overseas BWRs and Related Experience in Other Components Reviewed in GL 94-03 and NUREG-1544.
    - Cracking Has Also Been Observed in the Top Guide of a Swedish BWR.

Specific Examples

BWRVIP-75, Technical Basis for Revisions to GL 88-01 Inspection Schedules (NUREG-0313)

- Applicable in Extended Operating Period, But No License Renewal SE
- BWRVIP-75 Report Proposes Revisions to Extent and Frequencies for Piping Inspection Contained in GL 88-01
  - Based on Consideration of Inspection Results and Service Experience Gained by Industry since GL 88-01 Issuance, and Additional Knowledge Regarding Improved BWR Water Chemistry

Specific Examples

BWRVIP-75, Technical Basis for Revisions to GL 88-01 Inspection Schedules (NUREG-0313) (con't)

- Specific Findings
  - Scope of Program
    - BWRVIP-75 Specifically Applicable to Inspection of Welds Described in GL 88-01 and NUREG-0313, Rev. 2 (e.g., BWR Piping Welds Made of Austenitic Stainless Steel 4-Inches or Larger in Nominal Diameter and Exposed to Reactor Coolant at a Temperature above 200 °F During Power Operation, and to RPV Attachments and Appurtenances)
    - Are <u>Not</u> Applicable to Any Other Welds or Piping (e.g., Socket Welds, Carbon Steel Piping, Etc.).

Specific Examples

BWRVIP-75, Technical Basis for Revisions to GL 88-01 Inspection Schedules (NUREG-0313) (con't)

- Specific Findings
  - Scope of Program
    - Provides Summary of GL 88-01, Discussion on Use of HWC to Inhibit Initiation and Growth of IGSCC; Proposed Revised Inspection Criteria and Associated Risk Consideration
  - Staff Issued SE with Several Open Items
    - Proposed Inspection Frequency and Scope for Category A, B, C, and E Welds; Sample Expansion; Reactor Water Coolant Conductivity; Effective HWC and NMCA Programs; and, Identification of Safety Significant Locations

Specific Examples

BWRVIP-75, Technical Basis for Revisions to GL 88-01 Inspection Schedules (NUREG-0313) (con't)

- Specific Findings
  - Staff Found BWRVIP-75 Guidance Acceptable for Inspection of Subject BWR Piping Welds Except for Open Items
  - Revised BWRVIP-75 Report Can Be Used to Replace Inspection Guidance in GL 88-01.
    - Licensee's Implementation of Revised BWRVIP-75 Guidelines Will Provide Reasonable Assurance for Structural Integrity of Subject BWR Piping Welds.

Conclusions

Applicability of BWRVIP to License Renewal

- Staff Completing Review of BWRVIP LR Appendices and Has Found That:
  - Referencing BWRVIP AMPs and Completing Action Items Will Provide Reasonable Assurance that Applicant Will Adequately Manage Aging Effects During Extended Operation Period
  - Generic AMPs Usage Will Significantly Reduce Staff Review of LR Applications