CCNPP3COLA PEmails

From: Woods, Rick [rwoods@mema.state.md.us]
Sent: Tuesday, April 22, 2008 7:32 AM
To: Eric Weiss
Attachments: AnnexQcomplete Rev 10.pdf

Eric,

Current revision attached. Please let me know if you have additional questions. Thanks

Rick

Hearing Identifier: CalvertCliffs_Unit3Cola_Public_EX
Email Number: 37

Mail Envelope Properties (B06929CBDB1C6F44AA4BD00152376215012519C2)

Subject:
Sent Date: 4/22/2008 7:31:34 AM
Received Date: 4/22/2008 7:32:35 AM
From: Woods, Rick

Created By: rwoods@mema.state.md.us

Recipients:
"Eric Weiss" <Eric.Weiss@nrc.gov>
Tracking Status: None

Post Office: EXCHANGECLUSTER.mema.state.md.us

Files	**Size**	**Date & Time**
MESSAGE	117	4/22/2008 7:32:35 AM
AnnexQcomplete Rev 10.pdf	5602903	

Options
Priority: Standard
Return Notification: No
Reply Requested: No
Sensitivity: Normal
Expiration Date:
Recipients Received:

MARYLAND EMERGENCY OPERATIONS PLAN

ANNEX Q

RADIOLOGICAL EMERGENCY PLAN

FIXED NUCLEAR FACILITIES

ANNEX Q
RECORD OF CHANGES

CHANGE NUMBER	DATE OF CHANGE	DATE ENTERED	CHANGE MADE BY (SIGNATURE)

LIST OF EFFECTIVE PAGES

PAGE NUMBER	REVISION	PAGE NUMBER	REVISION
i thru viii	10		
1-1 thru 9-19	10		
Index 1 thru 5	10		

PLAN DISTRIBUTION – ANNEX Q AND APPENDICES

Organization/Official	Copies Annex Q	Plan Number(s)
Governor's Office	4	
Governor	(1)	1
Lt. Governor	(1)	2
Chief of Staff	(1)	3
Press Secretary	(1)	4
Comptroller of the Treasury	1	5
State Attorney General	1	6
Office of Legislative Reference	1	7
Calvert County	5	8-12
Cecil County	5	13-17
Dorchester County	5	18-22
Harford County	5	23-27
St. Mary's County	5	28-32
Southern States Energy Board	1	33
Governor's Executive Assistant for Public Safety	1	34
Allegany County	1	35
Anne Arundel County	1	36
Baltimore City	1	37
Baltimore County	1	38
Caroline County	1	39
Carroll County	1	40

PLAN DISTRIBUTION (Continued)

Organization/Official	Copies Annex Q	Plan Number(s)
Charles County	1	41
Frederick County	1	42
Garrett County	1	43
Howard County	1	44
Kent County	1	45
Montgomery County	1	46
Prince George's County	1	47
St. Mary's County	1	48
Queen Anne's County	1	49
Somerset County	1	50
Talbot County	1	51
Washington County	1	52
Wicomico County	1	53
Worchester County	1	54
Chairman, R.A.C. FEMA Region III	12	55-66
Calvert Cliffs Nuclear Power Plant, Inc	5	67-71
Exelon Corporation	5	72-76
Virginia Power Company	1	77
Public Service Electric and Gas	1	78

PLAN DISTRIBUTION (Continued)

Organization/Official	Copies Annex Q	Plan Number(s)
Virginia Emergency Management	1	79
West Virginia Emergency Management	1	80
New Jersey Emergency Management	1	81
Delaware Emergency Management	1	82
Pennsylvania Emergency Management	1	83
District of Columbia Emergency Management Office	1	84
Maryland Dept. of the Environment	7	85-92
Secretary	(1)	
Deputy Secretary	(1)	
Director Emergency Response	(1)	
Administrator, RHP	(1)	
Emerg. Resp. Coord.	(1)	
Director TARSA	(1)	
PIO	(1)	
Maryland Dept. of Health and Mental Hygiene	2	93-94
Secretary	(1)	
Director, Food Protection & Community Health	(1)	
Maryland Dept. of Natural Resources	6	95-100
Police	(1)	
Forest & Park Service	(1)	
Power Plant Research Program	(2)	
Fisheries Service	(1)	
Secretary	(1)	
Maryland Emergency Management Agency	12	104-115
American Red Cross Central Maryland Chapter	1	116

PLAN DISTRIBUTION (Continued)

Organization/Official	Copies Annex Q	Plan Number(s)
Maryland Dept. of Agriculture	2	117-118
Maryland Dept. of Public Safety & Correctional Services	5	119-123
Secretary	(1)	
Fire Marshall	(2)	
PIO	(1)	
Division of Corrections	(1)	
Maryland Dept. of Human Resources	1	124
Maryland Dept. of Transportation	7	125-131
Secretary	(1)	
State Hwy. Admin.	(2)	
Mass Transit Admin.	(1)	
Md. Aviation Admin.	(1)	
Md. Transportation Authority	(1)	
Md. Port Administration	(1)	
Maryland Dept of Education	2	132-133
Maryland Dept. of Housing and Community Development	2	134-135
Military Dept.	2	136-137
TAG	(1)	
MSCA	(1)	
Maryland Institute for Emergency Medical Services Systems	1	138
Salvation Army	1	139
U.S. Dept. of Energy	1	140
U.S. Coast Guard (Activity Baltimore)	4	141-144
Commanding General 1st Army	1	145
Hall of Records	1	146

PLAN DISTRIBUTION (Continued)

Organization/Official	Copies Annex Q	Plan Number(s)
Metropolitan/Washington Council of Governments	1	147
Maryland State Police	4	148-151
Superintendent	(1)	
FOB	(2)	
PIO	(1)	
Maryland Office of Planning	1	152
Maryland Secretary of State	1	153
Baltimore Metropolitan Regional Planning Council	1	154
Patuxent Naval Air Station	2	155-156
Maryland Office on Aging	1	157
Department Budget and Management	2	158-159
Maryland Department Business & Economic Development	1	160
Maryland Department of Assessment & Taxation	1	161
Maryland Department of General Services	1	162
Maryland Public Service Commission	1	163
Maryland Department of Juvenile Justice	1	164
Maryland Department of Labor, Licensing And Regulation	1	165
Maryland Energy Administration	1	166
Maryland Insurance Administration	1	167
Baltimore Distinct Corps of Engineers	1	168

Totals 168

AUTHORITY

The Maryland Emergency Management Agency (MEMA), as authorized by the Public Safety Article of the Annotated Code of the State of Maryland, Title 14, Emergency Management, has developed this Radiological Emergency Plan to assure public health and safety in the event of a radiological emergency affecting the State. Also, the Public Safety Article of the Annotated Code of the State of Maryland, Title 14, Emergency Management cites the authority of the Governor and of local heads of government.

Title 14.106, Emergency Management Powers of Governor provides the authority for the Governor to delegate these authorities to a secretary of a principal department such as the Secretary of the Department of Health and Mental Hygiene or the Secretary of the Department of the Environment to take whatever actions are necessary to protect the health of people in the State of Maryland.

Title 14-3A-03 of the Public Safety Article grants the Governor the power to authorize the Secretary of Health and Mental Hygiene to take certain actions to protect the citizens during a catastrophic health emergency.

Title 8-105 of the Environment Article authorizes the Secretary of the Department of the Environment to issue an order requiring any action found necessary to meet an emergency.

Executive order 01.01.1991.02, State of Maryland Emergency Management Policy. Establishes MEMA as the agency of State government with primary responsibility and authority for, among other things: The coordination of disaster and emergency response between State agencies and political subdivisions.

MARYLAND EMERGENCY OPERATIONS PLAN
ANNEX Q
RADIOLOGICAL EMERGENCY PLAN

TABLE OF CONTENTS

Section	Title	Page
RECORD OF CHANGES		ii
LIST OF EFFECTIVE PAGES		iii
PLAN DISTRIBUTION - ANNEX Q		iv
AUTHORITY		ix
1	GENERAL INFORMATION	1-1
1.1	REFERENCES	1-1
1.2	GLOSSARY	1-2
1.3	ABBREVIATIONS AND ACRONYMS	1-10
2	INTRODUCTION	2-1
2.1	PURPOSE	2-1
2.2	ORGANIZATION OF THE REP	2-1
2.2.1	Annex Q	2-1
2.2.2	Appendices to Annex Q	2-1
2.2.3	Supporting Documents	2-1
2.3	Site Description	2-2
2.3.1	Calvert Cliffs Nuclear Power Plant	2-2
2.3.2	Peach Bottom Atomic Power Station	2-10
3	PLANNING BASIS	3-1
3.1	BASIC FUNCTIONS	3-1
3.1.1	Accident Assessment	3-1
3.1.2	Notification and Communication	3-1
3.1.3	Command and Coordination	3-2
3.1.4	Protective Actions	3-2
3.1.5	Parallel Actions	3-3
3.1.6	Public Information	3-4
3.2	EMERGENCY PLANNING ZONES	3-6
3.2.1	Plume Zone	3-7
3.2.2	Ingestion Zone	3-7
3.3	PROTECTIVE ACTION GUIDES	3-7
3.3.1	Protective Action Guides for Plume Exposure	3-8
3.3.2	Protective Action Guides for Exposure from Foodstuffs of Water	3-8
3.3.3	Protective Actions	3-8
3.3.4	Termination of Protective Actions	3-10
3.4	ALLOWABLE CONTAMINATION LEVELS	3-10

TABLE OF CONTENTS (Continued)

Section	Title	Page
3.5	FIXED NUCLEAR FACILITIES - MARYLAND AND CONTIGUOUS STATES	3-10
3.5.1	Commercial Nuclear Facilities	3-10
3.5.2	Research Facilities	3-11
3.6	EMERGENCY CLASSIFICATION	3-11
3.6.1	Unusual Event	3-11
3.6.2	Alert	3-11
3.6.3	Site Area Emergency	3-11
3.6.4	General Emergency	3-12
3.7	SPECIAL CONCERNS	3-12
4	SPECIFIC POLICIES	4-1
4.1	ROLE OF THE FNF	4-1
4.2	ROLE OF THE INDIVIDUAL	4-1
4.3	ROLE OF THE COUNTY AND THE STATE	4-1
4.4	ROLE OF THE FEDERAL GOVERNMENT	4-1
4.5	MUTUAL AID AGREEMENTS	4-3
4.5.1	County	4-3
4.5.2	State	4-3
5	CONCEPT OF OPERATIONS	5-1
5.1	EMERGENCY RESPONSE ORGANIZATION	5-1
5.2	EMERGENCY FACILITIES	5-1
5.2.1	State Emergency Operations Center (SEOC)	5-1
5.2.2	County Emergency Operations Center	5-2
5.2.3	Accident Assessment Center (AAC)	5-2
5.2.4	Near-Site Area Emergency Operations Facility (EOF)	5-2
5.2.5	Joint Information Center	5-2
5.3	EMERGENCY COMMUNICATIONS	5-2
5.4	PLAN IMPLEMENTATION	5-3
5.4.1	Phase 1 - Initiation	5-3
5.4.2	Phase 2 - Operational	5-6
6	PLAN TESTING AND MAINTENANCE	6-1
6.1	SCENARIOS	6-1
6.2	DRILLS	6-1
6.2.1	Communication Drills	6-1
6.2.2	Medical Emergency Drills	6-1
6.2.3	Radiological Monitoring Drills	6-2
6.2.4	Accident Assessment Drills	6-2
6.3	EXERCISES	6-2
6.4	TRAINING	6-2

TABLE OF CONTENTS (Continued)

Section	Title	Page
6.4.1	Emergency Worker Training	6-2
6.4.2	Public Information Training	6-3
6.5	CRITIQUE	6-3
6.6	PLAN MAINTENANCE	6-3
6.7	SCHEDULING	6-3
7	SUMMARY PROCEDURES	7-1
7.1	STATE AGENCIES	7-2
7.1.1	Governor	7-2
7.1.2	Maryland Emergency Management Agency	7-3
7.1.3	Department of Health and Mental Hygiene	7-6
7.1.4	Department of the Environment	7-9
7.1.5	Maryland Department of Agriculture	7-12
7.1.6	Department of Natural Resources	7-14
7.1.7	Maryland State Police	7-21
7.1.8	Department of Human Resources	7-23
7.1.9	Department of Transportation	7-24
7.1.10	Maryland State Department of Education	7-29
7.1.11	Department of Housing and Community Development	7-30
7.1.12	Maryland Military Department/National Guard	7-31
7.1.13	Maryland Institute for Emergency Medical Services System	7-34
7.1.14	Office of the Comptroller of the Treasury	7-36
7.1.15	State Fire Marshal	7-37
7.2	COUNTY OPERATIONS	7-39
7.2.1	Plume Zone Counties	7-39
7.2.2	Ingestion Zone Counties	7-40
7.3	PRIVATE AGENCIES	7-42
7.3.1	American Red Cross	7-42
7.3.2	Salvation Army	7-43
7.4	FEDERAL AGENCIES	7-44
7.4.1	Department of Energy	7-44
7.4.2	Federal Emergency Management Agency	7-45
7.4.3	United States Coast Guard	7-46
8	INGESTION ZONE OPERATIONS	8-1
8.1	INTRODUCTION	8-1
8.1.1	Ingestion Emergency Planning Zone	8-1
8.2	CONCEPT OF OPERATIONS	8-1
8.3	STATE RESPONSIBILITIES AND EMERGENCY RESPONSE	8-2
8.3.1	Maryland Emergency Management Agency	8-2
8.3.2	Department of Health and Mental Hygiene	8-2
8.3.3	Tidal Fisheries Division, Department of Natural Resources	8-2
8.3.4	Maryland Department of Agriculture	8-2

TABLE OF CONTENTS (Continued)

Section	Title	Page
8.3.5	State High Administration, Department of Transportation	8-3
8.3.6	Maryland Military Department/National Guard	8-3
8.4	COUNTY RESPONSIBILITIES AND EMERGENCY RESPONSE	8-3
8.4.1	County Emergency Management	8-3
8.4.2	County Health Department	8-3
8.5	FEDERAL RESPONSIBILITIES AND EMERGENCY RESPONSE	8-3
9	ATTACHMENTS	
9-1	SUPPORTING DOCUMENTS LISTING	9-1
9-2	PLANNING REQUIREMENTS FOR STATE AND COUNTY STANDARDOPERATING PROCEDURES	9-2
9-3	LETTERS OF AGREEMENT	9-4
9-4	INITIAL ACCIDENT REPORT - FIXED NUCLEAR FACILITIES	9-5
9-5	HOSPITALS CAPABLE OF RECEIVING RADIOACTIVELY CONTAMINATED PATIENTS	9-8
9-6	FEDERAL RADIOLOGICAL MONITORING AND ASSESSMENT PLAN CAPABILITIES AND SUPPORT	9-9
9-7	DEPARTMENT OF ENERGY RADIOLOGICAL ASSISTANCE PROGRAM	9-12
9-8	FEDERAL RADIOLOGICAL EMERGENCY RESPONSE PLAN	9-13
INDEX	Index-1	

LIST OF FIGURES

Section	Title	Page
2.1	CCNPP 10 Mile (Plume) Emergency Planning Zone	2-8
2.2	CCNPP 50 Mile (Ingestion) Emergency Planning Zone	2-9
3-1	Concept of Emergency Planning Zones	3-21
3-2	Nuclear Reactor Sites In and Around Maryland	3-22
5-1	State of Maryland - Emergency Response Organization	5-22
5-2	State of Maryland - Accident Assessment	5-23
5-3	State of Maryland - Initial Notification	5-24
5-4	State of Maryland - Command and Coordination	5-25
5-5	State of Maryland - Protective Actions	5-26
5-6	State of Maryland - Parallel Actions	5-27

LIST OF TABLES

Section	Title	Page
2-1	Emergency Facilities Communication, CCNPP	2-7
2-2	Emergency Facilities Communication, PBAPS	2-16
3-1	Size of the Emergency Planning Zone	3-13
3-2	Recommended Protective Action Guides for Plume Exposure	3-14
3-3	Health Effects Associated with Whole-Body Absorbed Doses	3-16
3-4	Approximate Cancer Risk to Average Individuals from 25 Rem	3-17
3-5	Derived Intervention Level for Each Radionuclide Group	3-18
3-6	Commercial Nuclear Facilities and Affected Maryland Counties	3-19
3-7	Evacuation Support Counties	3-20
5-1	Emergency Facility Communications	5-18
5-2	State of Maryland Agency Responsibilities Matrix	5-19
5-3	State of Maryland Concept of Operations Matrix	5-20
5-4	State of Maryland Functional Responsibility and Key Individuals Listing	5-21
6-1	Emergency Plan Maintenance Responsibility	6-5
9-1	FRERP Components	9-18

SECTION I

GENERAL INFORMATION

This Section lists the major sources consulted in the preparation of this Radiological Emergency Plan (REP), provides a glossary of terms used in the REP, and provides a list of abbreviations and acronyms used in the test and flow diagrams.

1.1 REFERENCES

Accidental Radioactive Contamination of Human Food and Animal Feeds: Recommendations for State and local agencies, August 13, 1998, U.S. Department of Health and Human Services. Food and Drug Administration.

Criteria for Preparation and Evaluation of Radiological Emergency Response Plans and Preparedness in Support of Nuclear Power Plants, NUREG-0654/FEMA-REP-1, Revision 1 November 1980, U.S. Nuclear Regulatory Commission and Federal Emergency Management Agency.

Federal Radiological Emergency Response Plan, Federal Register, Vol. 61, No. 90, May 8, 1996,Federal Emergency Management Agency.

Guide and Checklist for the Development and Evaluation of State and Local Government Radiological Emergency Response Plans in Support of Fixed Nuclear Facilities, NUREG-75/111, December 1974, and Supplement No. 1 to NUREG-75/111, March 1977, U.S. Nuclear Regulatory Commission.

Manual of Protective Action Guides and Protective Actions for Nuclear Incidents, EPA-400-R-92-001, October 1991, U.S. Environmental Protection Agency.

Planning Basis for the Development of State and Local Government Radiological Emergency Response Plans in Support of Light Water Nuclear Power Plants, NUREG-0396, (EPA 520/1-78-016), December 1978, U.S. Nuclear Regulatory Commission ad U.S. Environmental Protection Agency Task Force on Emergency Planning (includes description of Plume Zones and Ingestion Zones).

Public Protection Strategies for Potential Nuclear Reactor Accidents: Sheltering Concepts with Existing Public and Private Structures, SAND-77-1725, February 1978, Sandia Laboratories.

Termination of Operating Licenses for Nuclear Reactors, Regulatory Guide 1.86, June 1974, U.S. Nuclear Regulatory Commission.

Protection of the Thyroid Gland in the Event of releases of Radioiodine, National Council on Radiation Protection and Measurements (NCRP) Report Number 55.

1.2 GLOSSARY

As used in this Plan, the terms listed below have the meanings given in the definitions. Underlined words cited in the definitions are cross-indexed.

Access Control

The Protective Action to control traffic which may include the establishment of roadblock barriers or other means to limit public entry into designated areas. Access Control is also inherent in the Protective Actions of Take Shelter and Evacuation, and the Parallel Actions of Relocation and Reentry.

Accident

The unplanned release or potential release of radioactive materials.

Accident Assessment

The evaluation of the actual and potential consequences of an unplanned release of radioactive materials from a Fixed Nuclear Facility. It includes an estimate of the atmospheric dispersion values, thyroid inhalation and whole body doses, deposition rates for ingestion exposures, environmental field monitoring, sample collection, and sample analysis.

Contamination

The presence of radioactive material in undesirable locations.

Critical Pathway

The route or pathway that is given primary consideration as being the mechanism of principal radiation exposure to the public under given conditions.

Curie

A unit of radioactivity; 1 curie is that amount of radioactive material in which 3.7 x 1010 disintegrations occur per second. The millicurie and microcurie are respectively one thousandth and one millionth of a curie.

Decontamination

The removal of radioactive contaminants from surfaces or equipment, as by cleaning or washing.

Design Basis Accident

The postulated accident that a nuclear power plant is designed to withstand or mitigate so as to meet U.S. Nuclear Regulatory Commission regulatory requirements.

Dose

The quantity of radiation absorbed, per unit mass of irradiated material, by the body or by any portion of the body; measured in Rems and rads.

Dose Commitment

The total radiation dose to a part of the body that will result from retention in the body of radioactive material. (For purpose of estimating the dose commitment, it is assumed that, from the time of intake, the period of exposure to retained material will not exceed 50 years.)

Drill

The supervised instruction period aimed at developing, maintaining, and evaluating skills in a particular operation of emergency preparedness. A drill is often a component of an exercise.

Emergency

Any actual or potential event or accident at a Fixed Nuclear Facility which may require immediate Protective Actions.

Emergency Action Levels

Radiological dose rates; specific contamination levels of airborne, waterborne, or surface deposited concentrations or radioactive materials; or specific instrument indications (including their rates of change) that may be used as thresholds for initiating such specific emergency measures as designating a particular class of emergency, initiating a notification procedure, or initiating a particular Protective Action.

Emergency Medical Services

The Parallel Action that entails the resuscitation, stabilization, and transportation of the sick and injured.

Emergency Operations Center (EOC)

The command and communication center which will be activated to evaluate the radiological emergency and coordinate the Protective Actions and Parallel Actions that may need to be implemented.

Emergency Operations Facility (EOF), Near-site

The EOF is an emergency response facility located near the Fixed Nuclear Facility used for the continuous coordination of Accident Assessment beginning at the alert level emergency classification. The EOF shall be activated during an emergency having or potentially having environmental consequences.

Emergency Planning Zone

The generic area about a Fixed Nuclear Facility for which planning is recommended to assure that prompt and effective actions can be taken to protect the public in the event of an accident. It is defined for the Plume Exposure Pathway and Ingestion Exposure Pathway.

Emergency Worker

Workers who may incur increased levels of exposure under emergency conditions.

Evacuation

The Protective Action that entails the notification of the evacuation actions and procedures as well as the actual movement of the public out of the affected area.

Evacuation Centers (also known as Mass Care Centers)

Predesignated facilities (e.g., schools, churches, fire stations, etc.) that are located approximately 15 miles or more from the Fixed Nuclear Facility. During a radiological emergency these facilities may be activated so as to provide necessary Mass Care services to evacuees.

Exclusion Area

The area immediately surrounding the Fixed Nuclear Facility in which the reactor licensee has the authority to determine all activities including exclusion or removal of personnel and property from the area.

Exercise

An event that tests a major portion or all of the basic elements within the Radiological Emergency Plan. This event demonstrates the capability of the emergency preparedness organization to cope with a radiological emergency that could result in off-site consequences.

Fixed Nuclear Facility

A site where nuclear materials are employed in an operation (i.e., nuclear reactors) or in storage which could cause an emergency nuclear incident.

Food, Water, Milk, and Livestock Feed Control

The Protective Action that entails controlling food, water, milk, and livestock feed supplies which may have become contaminated. Provisions for alternative sources of these commodities will also be identified.

Full activation of EOC

When all representatives of organizations that have functions in the Radiological Emergency Plan are represented at the Emergency Operations Center.

Implementing Procedure

Preestablished steps of instructions and checklists which detail an agency's emergency notification fan-out and direct an agency from its normal mode of operations to an emergency mode of operations. These procedures will also direct an agency to its Standard Operating Procedures.

Ingestion Exposure Pathway

The principal exposure from this pathway would be from ingestion of contaminated water or foods, such as milk, livestock feed, or fresh vegetables. The time of potential exposure could range in duration from hours to months.

Ingestion Zone

The Emergency Planning Zone corresponding to the Ingestion Exposure Pathway having a radius of about 50 miles for commercial nuclear reactors and a radius of about 5 miles for research reactors.

Initiating Agency

That agency, through the legal authority of its highest official, which sets into motion certain actions without necessarily becoming involved in them. The actions may include Take Shelter, Evacuation, or Return and may be preceded by an evaluation of their need. The initiation may take the form of a recommendation or directive. Thus, the State Department of the Environment may evaluate a situation and its Secretary direct a certain Protective Action. County resources would then implement that directive. Similarly, the President of the Board of County Commissioners may direct actions which would be implemented by various elements of the County government.

Local jurisdiction

There are twenty six local jurisdictions in Maryland. They include the twenty three Maryland counties, Baltimore City, Ocean City and the City of Annapolis.

Key Agency

The governmental department or subdivision that is assigned a fundamental and/or lead coordinating responsibility to ensure the fulfillment of a designated function.

Law Enforcement and Crime Prevention

The Parallel Action that entails the use of law enforcement personnel to maintain civil order during and after the accident.

Mass Care

The Parallel Action that entails the provision of food, shelter, registration, etc., for evacuees. Routine medical services will be provided for by normal medical organizations at the local level.

Off-site

The area beyond the Exclusion Area of a Fixed Nuclear Facility.

On-site

The area including and around the Fixed Nuclear Facility encompassing the Exclusion Area.

Overall Coordination

That process which ensures that all functions generally act together, smoothly. It never dictates or implies interference in the operating procedures or performance of key or support departments or agencies at the State or local level.

Parallel Actions

Those actions which are planned or are taken during or after Protective Actions to assure public health and welfare. Parallel Actions include Emergency Medical Services, Radiation Exposure Control, Law Enforcement and Crime Prevention, Mass Care, Relocation and Reentry.

Partial Activation of EOC

When the Emergency Operations Center is staffed by emergency management personnel only.

Plume Exposure Pathway

The principal exposure sources from this pathway are:

a. whole body external exposure to gamma radiation from the plume and from deposited material, and

b. inhalation exposure from the passing radioactive plume. The time of potential exposure could range from hours to days.

Plume Zone

The Emergency Planning Zone corresponding to the Plume Exposure Pathway having a radius of about 10 miles for commercial nuclear reactors and about 1 mile for research reactors.

Protected Dose

The estimate of the radiation dose that potentially affected population groups could receive if Protective Actions are not taken.

Protective Actions

Those measures taken in anticipation of or after an uncontrolled release of radioactive material has occurred to prevent or minimize abnormal radiological exposures to persons that would be likely to occur if the actions were not taken. Protective actions include Take Shelter, Potassium Iodide, Evacuation, Access Control, and Food, Water, Milk, and Livestock Feed Control.

Protective Action Decision (PADs)

A directive issued by the Maryland Secretary of the Environment or the County designated official that directs protective actions to be implemented by the affected local governments.

Protective Action Guides (PAGs)

Projected radiological doses to individuals in the general population that warrant Protective Action following an actual or potential release of radioactive material. Protective Actions would be warranted provided the reduction in individual dose expected to be achieved by carrying out the Protective Action is not offset by excessive risks to individual safety in taking the Protective Action. The PAG does not include the dose that has unavoidably occurred prior to the assessment. PAGs are one of many considerations for determining when Protective Actions are necessary.

Rad

Acronym for radiation absorbed dose; basic unit of absorbed dose of radiation. Technically, a dose of one rad means the absorption of 100 ergs of radiation energy per gram of absorbing material.

Radiation

Any or all of the following: alpha particles, beta particles, gamma rays, x-rays, neutrons, high-speed electrons, high-speed protons, and other atomic particles.

Radiation Exposure Control

The Parallel Action that entails monitoring and controlling public and emergency worker exposure, keeping records of this exposure, and the actions and procedures necessary for the decontamination of evacuees, emergency workers, and equipment and materials.

Radiation Incident

Any event involving radiation exposure or radioactive contamination to the public.

Radiological Emergency Plan

A detailed plan which coordinates and describes the emergency response organizations, and the responsibilities and capabilities of local, State, and Federal governments and private organizations to assure the public health and safety arising from an emergency in which there is a possible unexpected radiological release.

Reception Centers

Facilities where monitoring, decontamination and registration of evacuees is conducted.

Re-entry

Refers to temporary entry of individuals into a restricted zone (evacuated area) under controlled conditions.

Relocation

The removal or continued exclusion of peoples (households) from contaminated areas to avoid chronic radiation exposure.

Rem

Acronym for Roentgen Equivalent Man, a unit of dose equivalent; the dosage of an ionizing radiation that will cause the same biological effect as one Roentgen of X-ray or gamma ray dosage.

Return

The Parallel Action that entails the returning, after evacuation, of the public when the radiation risk has been averted or reduced.

Roentgen

A unit of radioactive exposure; the amount of X-radiation or gamma radiation that will provide one electrostatic unit of charge (positive or negative) in one cubic centimeter of dry air at standard pressure and temperature conditions.

Routine Medical Services

The administration of basic health care services. Examples include treatment of minor cuts and bruises, basic first aid, etc. Routine medical services will be provided for by normal medical organization at the local level.

Shelter

A shelter, as defined in this plan, is any place indoors, such as a house or building, which provides a measure of protection from an atmospheric radioactive release. See also Take Shelter.

Source Term

The radioisotope inventory of the reactor core or radioisotope release to the environment, often expressed as a function of time.

Standard Operating Procedure

A detailed preestablished set of operational instructions which direct an agency's actions in response to an emergency. These procedures will be used by an agency in carrying out its assigned responsibilities for Protective Actions and Parallel Actions.

Support Agency

The governmental department or subdivision that is assigned to assist in the fulfillment of a designated function.

Take Shelter

The Protective Action that entails the notification of the public to seek protection by going indoors, closing doors and windows, turning off ventilation systems, and stay tuned to local EBS station.

Thyroid Blocking

The use of potassium iodide or other suitable drugs for the purpose of saturating the thyroid gland with stable (i.e., non-radioactive) iodine and thereby preventing thyroid uptake of radioiodine.

1.3 ABBREVIATIONS AND ACRONYMS

The following abbreviations and acronyms are used in the flow diagrams and test of Annex Q and its Appendices.

A

AAC - ACCIDENT ASSESSMENT CENTER
ADMIN - ADMINISTRATOR
AGCY - AGENCY
ANA - ANNE ARUNDEL COUNTY
ANIM - ANIMAL
ARC - AMERICAN RED CROSS
ARES - AMETEUR RADIO EMERGENCY SERVICES

B

BAL - BALTIMORE COUNTY
BALC - BALTIMORE CITY
BG&E - BALTIMORE GAS & ELECTRIC COMPANY
BRD OF ED - BOARD OF EDUCATION
BRP - BUREAU OF RADIATION PROTECTION (PENNSYLVANIA)

C

CALV - CALVERT COUNTY
CAR - CARROLL COUNTY
CAMB - CITY OF CAMBRIDGE
CCA - COMPREHENSIVE COOPERATIVE AGREEMENT
CCNPP - CALVERT CLIFFS NUCLEAR POWER PLANT
CD - COUNTY CIVIL DEFENSE & DISASTER PREPAREDNESS AGENCY
CE - CONSTELLATION ENERGY
CEC - CECIL COUNTY
CENT - CENTRAL ALARM
CES - UNIVERSITY OF MARYLAND COOPERATIVE EXTENSION SERVICE
CHD - COUNTY HIGHWAY DEPARTMENT
CMNR - COMMISSIONER (S)
CMSN - COMMISSION
CO - COMPANY
COMM - COMMUNICATIONS
CONTIG - CONTIGUOUS
CPLNG - COVE POINT LIQUEFIED NATURAL GAS TERMINAL
CTR - CENTER

D

DC - DISTRICT OF COLUMBIA
DE - STATE OF DELAWARE
DES - DEPARTMENT OF EMERGENCY SERVICES

DHCD	-	DEPARTMENT OF HOUSING AND COMMUNITY DEVELOPMENT
DHMH	-	DEPARTMENT OF HEALTH AND MEDICAL HYGIENE
DHR	-	DEPARTMENT OF HUMAN RESOURCES
DHS	-	DEPARTMENT OF HOMELAND SECURITY
DIR	-	DIRECTOR
DNR	-	DEPARTMENT OF NATURAL RESOURCES
DOE	-	U.S. DEPARTMENT OF ENERGY
DORCH	-	DORCHESTER COUNTY
DOT	-	DEPARTMENT OF TRANSPORTATION
DPS	-	DEPARTMENT OF PUBLIC SAFETY
DPSC	-	DEPARTMENT OF PUBLIC SAFETY AND CORRECTIONAL SERVICES

E

EAS	-	EMERGENCY ALERT SYSTEM
EMRC	-	EMERGENCY MEDICAL SOURCES, CENTER, MIEMSS
ENGR DEPT	-	ENGINEERING DEPARTMENT
ENGR DIV	-	ENGINEERING DIVISION
ENGR	-	ENGINEER
EOC	-	EMERGENCY OPERATIONS CENTER
EOF	-	EMERGENCY OPERATIONS FACILITY
EPA	-	U.S. ENVIRONMENTAL PROTECTION AGENCY
EPZ	-	EMERGENCY PLANNING ZONE
ERDS	-	EMERGENCY RESPONSE DATA SYSTEM

F

FEMA	-	FEDERAL EMERGENCY MANAGEMENT AGENCY
FGH	-	FALLSTON GENERAL HOSPITAL
FNF	-	FIXED NUCLEAR FACILITY
FPWS	-	FOREST, PARK, AND WILDLIFE SERVICES, DNR
FRERP	-	FEDERAL RADIOLOGICAL EMERGENCY RESPONSE PLAN
FRMAP	-	FEDERAL RADIOLOGICAL MONITORING AND ASSESSMENT PLAN

G

GE	-	GENERAL EMERGENCY
GEN	-	GENERAL
GOV	-	GOVERNMENT

H

HAR	-	HARFORD COUNTY
HCGS	-	HOPE CREEK GENERATING STATION
HLTH	-	HEALTH
HMH	-	HARFORD MEMORIAL HOSPITAL
HOSP	-	HOSPITAL
HWY	-	HIGHWAY

I

IPCC	-	INGESTION PATHWAY COORDINATING COMMITTEE

J

JIC/JIS	-	JOINT INFORMATION CENTER/ JOINT INFORMATION SYSTEM

K

KEN	-	KENT COUNTY

L

M

MD	-	STATE OF MARYLAND
MDA	-	MARYLAND DEPARTMENT OF AGRICULTURE
MDE	-	MARYLAND DEPARTMENT OF THE ENVIRONMENT
MEDIA	-	PUBLIC NEWS MEDIA
MEM HOSP	-	MEMORIAL HOSPITAL
MEMA	-	MARYLAND EMERGENCY MANAGEMENT AGENCY
MIEMSS	-	MARYLAND INSTITUTE FOR EMERGENCY MEDICAL SERVICES SYSTEMS
MILES	-	MARYLAND INTERAGENCY LAW ENFORCEMENT SYSTEM
MMD/NG	-	MARYLAND MILITARY DEPARTMENT/NATIONAL GUARD
MPA	-	MARYLAND PORT ADMINISTRATION, DOT
MSDE	-	MARYLAND STATE DEPARTMENT OF EDUCATION
MSP	-	MARYLAND STATE POLICE

N

NACOM	-	NATIONAL COMMUNICATIONS SYSTEM
NAPS	-	NORTH ANNA POWER STATION
NAWAS	-	NATIONAL WARNING SYSTEM
NIMS	-	NATIONAL INCIDENT MANAGEMENT SYSTEM
NJ	-	STATE OF NEW JERSEY
NRC	-	U.S. NUCLEAR REGULATORY COMMISSION
NRP	-	NATURAL RESOURCES POLICE, DNR
NRP	-	NATIONAL RESPONSE PLAN

O

OCT	-	OFFICE OF THE COMPTROLLER OF THE TREASURY
OFPH	-	OFFICE OF FOOD AN PRODUCT HEALTH, DHMH

P

PA	-	STATE OF PENNSYLVANIA
PAD	-	PROTECTIVE ACTION DECISION
PAG	-	PROTECTIVE ACTION GUIDE
PAR	-	PROTECTIVE ACTION RECOMMENDATION
PBAPS	-	PEACH BOTTOM ATOMIC POWER STATION

PD	-	POLICE DEPARTMENT
PEMA	-	PENNSYLVANIA EMERGENCY MANAGEMENT AGENCY
PI	-	PUBLIC INFORMATION
PIO	-	PUBLIC INFORMATION OFFICER
PPRP	-	POWER PLANT RESEARCH PROGRAM
PRIV	-	PRIVATE
PRES	-	PRESIDENT

Q

R

R	-	ROENTGEN
RACES	-	RADIO AMATEUR CIVIL EMERGENCY SERVICE
RAD OFF	-	RADIOLOGICAL OFFICER
RADEF	-	RADIOLOGICAL DEFENSE
RAP	-	RADIOLOGICAL ASSISTANCE PROGRAM
RDO	-	RADIATION DEFENSE OFFICER
REACT	-	RADIO EMERGENCY ASSOCIATION CITIZENS' TEAM
REP	-	RADIOLOGICAL EMERGENCY PLAN
RHP	-	RADIOLOGICAL HEALTH PROGRAM

S

SAE	-	SITE AREA EMERGENCY
SALV	-	SALVATION ARMY
SCHL	-	DEPARTMENT OF PUBLIC SCHOOLS
SEC	-	SECRETARY
SFM	-	STATE FIRE MARSHAL
SHA	-	STATE HIGHWAY ADMINISTRATION, DOT
SHRF	-	SHERIFF
SNGS	-	SALEM NUCLEAR GENERATING STATION
SOC SERV	-	DEPARTMENT OF SOCIAL SERVICES
SOP	-	STANDARD OPERATING PROCEDURE
ST MARY'S	-	ST. MARY'S COUNTY
SYSCOM	-	SYSTEMS COMMUNICATIONS CENTER, MIEMSS

T

TIVFC	-	TAYLORS ISLAND VOLUNTEER FIRE COMPANY
TFD	-	TIDAL FISHERIES DIVISION, DNR
TLD	-	THERMOLUMINESCENT DOSIMETER
TMINS	-	THREE MILE ISLAND NUCLEAR STATION

U

UE	-	UNUSUAL EVENT
UMH	-	UNION MEMORIAL HOSPITAL
USCG	-	U.S. COAST GUARD

V

VA	-	STATE OF VIRGINIA

	VFC	-	VOLUNTEER FIRE COMPANY
W			
	WARD	-	WARDEN
	WV	-	STATE OF WEST VIRGINIA
X			
Y			
Z			

SECTION 2

INTRODUCTION

2.1 PURPOSE

The purpose of this Radiological Emergency Plan (REP) is to provide a coordinated State, County, private, and Federal response to a radiological emergency at a Fixed Nuclear Facility (FNF) affecting the State of Maryland.

2.2 ORGANIZATION OF THE REP

The State of Maryland REP is annexed to the Maryland Emergency Operations Plan. The REP is structurally divided into:

(1) Annex Q; (2) Appendices to Annex Q (County Radiological Plans); and (3) Supporting Documents.

2.2.1 Annex Q

Annex Q includes the planning basis, concept of operations, and specific policies fundamental to the REP implementation.

Also presented in Annex Q are the Summary Procedures for State, County, private, and Federal agencies with assigned responsibility in the event of an accident at a FNF affecting the State. Each agency's role is summarized along with interfaces between participating agencies.

Finally, Annex Q addresses in general, the generic Ingestion Zone actions and, where applicable, Evacuation Support.

2.2.2 Appendices to Annex Q

Appendices are no longer a separate document. Each county maintains summary procedures for responding to a FNF accident.

2.2.3 Supporting Documents

Supporting plans and procedures have been developed which provide specific guidance in the implementation of the Maryland REP. These documents address such activities as Accident Assessment, Radiological Field Monitoring and Sample Collection, Radiation Exposure Control, Public Information, Evacuation Time Estimates, Air Traffic Control, Ingestion Zone/Evacuation Support Operation, and Federal Assistants Support.

See Attachment 9-1 for a complete listing of supporting documents.

2.3 SITE DESCRIPTIONS

Site descriptions for each fixed Nuclear Facility affecting the State of Maryland are summarized. The Calvert Cliffs Nuclear Power Plant has all of its 10 mile plume Emergency Planning Zone within the state border while only one-half of the Peach Bottom Atomic Power Station plume Emergency Planning Zone lies within the northern confines of the State.

2.3.1. Calvert Cliffs Nuclear Power Plant

2.3.1.1. Site Vicinity Description

The CCNPP is located near the town of Lusby in Calvert County on the west bank of the Chesapeake Bay approximately 10 1/2 miles southeast of Prince Frederick (See Figure 2-1). The site covers an area of approximately 1200 acres. Nearby communities include: Calvert Beach and Long Beach, approximately 3 miles to the northwest; White Sands, approximately 3 miles to the west, Cove Point, approximately 4 1/2 miles to the southeast; Chesapeake Ranch Estates, approximately 6 miles to the south-southwest; and the Patuxent Naval Air Test Center, approximately 10 miles to the south. Camp Bay Breeze, a summer camp, is located 2 miles southeast of the site (See Figure 2-2).

The metropolitan centers closest to the site are: Washington, D.C., approximately 45 miles to the northwest; Baltimore, Maryland, approximately 60 miles to the north, Richmond, Virginia, approximately 80 miles to the southeast; and Norfolk, Virginia, approximately 110 miles to the south.

The majority of the land around the site is devoted to the farming of tobacco, corn, soybeans, and hay. Dairy farming is of minor importance. The waters adjacent to the site are used for commercial fishing, primarily for shellfish such as clams, oysters, and crabs.

2.3.1.2 Concept of Operations

2.3.1.2.1. Emergency Operations

CCNPP has developed an Emergency Organization to respond to an emergency situation at the site which consists of two groups; the On-Site Emergency Organization and the Recovery Organization.

2.3.1.2.1.1. On-Site Emergency Organization

In an emergency, the Shift Manager has designated alternate, or any designated higher supervisory personnel will activate the Calvert Cliffs Nuclear Power Plant Emergency Response Plan and the On-Site Emergency Organization will be put into effect.

The On-Site Emergency Organization is composed of designated trained plant personnel grouped into teams to augment shift personnel during an emergency situation. Provisions exist for the rapid assignment of other plant personnel to the On-Site Emergency

Organization as necessary, and for providing continuous (24-hour) operations for a protracted period of time.

For all emergencies, the Shift Manager will become the interim Emergency Director. The interim Emergency Director will command the On-Site Emergency Organization until relived of his duties by a designated higher supervisory member of the plant staff who will then become the Emergency Director.

The Emergency Director will be in charge of and coordinate Site Emergency operations from the Emergency Operations Facility. For all emergency classifications, the Emergency Director will remain the senior licensee official. Responsibilities of the Emergency Director will include accident assessment, accident classification, notification of the State and Counties, and recommendation of offsite protective actions. The Technical Support Center reports to the Emergency Director and will direct the activities of the On-Site Emergency center staffs, including the following emergency teams:

Fire Brigade
First Aid Team
Dosimetry Team
On-Site and Off-Site Monitoring Teams
Chemistry Team
Instrument & Electrical Maintenance Team
Mechanical Maintenance Team
Security Team

Communicators and Assembly Area Leaders are under the direction of their respective emergency center director.

In case of an Unusual Event or an Alert, the emergency is essentially handled by site/staff personnel. For a Site Area Emergency or General Emergency, corporate level personnel will establish a Recovery Organization which will be superimposed on the On-Site Emergency Organization. Once established, the Recovery Organization will assume the overall command and coordination of all Constellation Nuclear emergency response efforts.

2.3.1.2.1.2. Recovery Organization

The Recovery Organization, coordinated by the Recovery Manager, will be activated for Site Area and General Emergencies. The Emergency Director will transition to the Recovery Manager and will have overall command and coordination of all Constellation Nuclear emergency response efforts. He will maintain immediate responsibilities for accident assessment, accident classification, plant operations, and interface with State and County emergency organizations.

When notified of a Site Area Emergency or General Emergency condition, the Recovery Manager will activate the Recovery Organization. The Recovery Organization is responsible for providing the Recovery Manager with technical assistance, additional personnel and other information and resources necessary to cope with the emergency. The Recovery Organization will provide expertise in such areas as public information and relations, security, environmental surveillance, engineering, construction, maintenance, plant operations, and radiation protection.

2.3.1.2.2. Agreements

Agencies which would not normally be available to CCNPP for assistance through existing State or Federal plans, but will make certain services available in the event of an emergency have letters of agreement so stating. Summaries of these agreements are presented in the Calvert Cliffs Nuclear Power Plant Emergency Response Plan.

2.3.1.2.3. Emergency Facilities

Joint Information Center

The Joint Information Center will be fully activated for Site Area Emergency and General Emergency class accidents. It contains facilities for Constellation Nuclear representatives to meet with NRC, State and County agency representatives for the purpose of releasing emergency announcements to the new media. This facility contains resources for document reproduction equipment, telecopying equipment, and telephone and television electrical connections for use by the news media. This center will be supervised by a Corporate Spokesperson who will coordinate all information releases concerning on-site conditions relating to CCNPP.

2.3.1.2.4. Emergency Communications

Table 2-1 identifies the primary and alternate methods of communication among CCNPP and the off-Site Area Emergency facilities and centers. Primary and alternate contacts are identified by title for each facility where applicable.

Constellation Nuclear has installed an emergency communication system which links together key on-site and off-Site Emergency facilities which would be activated in response to an emergency at CCNPP. This emergency system consists of dedicated line telephones backed up by Constellation Nuclear radio. On-Site Emergency centers on this system include Control Room, Technical Support Center (TSC), TSC-Annex, and Operational Support Center (OSC). The Joint Information Center and Emergency Operations Facility (EOF) in Prince Frederick are also on this system. Off-Site Emergency centers on the system include the three plume zone counties' EOCs (Calvert, Dorchester and St. Mary's counties), the State EOC, and Accidental Assessment Center. Additional phones and radios are located in the plume zone counties' communications centers/central alarms and the Maryland Joint Operations Center to ensure 24 hour notification.

The dedicated line is an automatic ring down system. The system may be activated for conferencing with all parties or selectively activated by any of the on-site centers. When the system is activated by an off-site center, it will automatically ring in the Control Room, Technical Support Center or the Emergency Operations Facility.

2.3.1.2.5. Emergency Response Plan Implementation

2.3.1.2.5.1. Initiation Phase

A specific notification sequence has been established for each accident class providing the mechanism for alerting the responsible State and County agencies of an emergency condition at the site. Initial notification will be made to Calvert County; St. Mary's

County, Dorchester County, the MEMA and the MDE via the dedicated CCNPP automatic ringdown phones. Notification of the State and Counties will be received either by the Emergency Operations Centers or their designate communications centers. The initial notification will include the information listed on the Initial Notifications forms provided by the utility.

During the Initiation Phase of less severe accidents, CCNPP may request support from the Counties or State. During more severe accidents having potential off-site effects (Site and General Emergencies), State and County radiological capabilities will be taxed to their limit and will not be available for site radiological support. During severe emergencies, State and County agencies will receive follow-up notification from CCNPP providing updated accident information and technical advice.

2.3.1.2.5.2. Operational Phase

The Operational Phase begins following the initial notification of the State and/or Counties by CCNPP and the initiation of the off-Site Area Emergency response in accordance with the Maryland REP. It consists of follow-up communications between State and County EOCs, the State Department of the Environment's Accident Assessment Center, and CCNPP. The CCNPP will communicate information such as updated source term, meteorological conditions, results of off-site radiological monitoring, changes in predicted off-site dose projections, specific information regarding plant status, and effectiveness of operator efforts to mitigate the emergency. Constellation Nuclear will receive information on the progress of State and County emergency operations.

2.3.1.3 Summary Procedures

Procedures for CCNPP are presented and summarized with regard to CCNPP role and responsibility. Summary Procedures are detailed according to assigned responsibility for each of the six basic planning functions.

2.3.1.3.1. Accident Assessment

CCNPP will classify the accident in accordance with the established plant accident classification system. CCNPP will report accident related information and provide updates of accident status to the Plum Zone Counties, MEMA, and the State Accident Assessment Center in accordance with the Emergency Response Plan. For general emergency declarations, CCNPP will recommend initiation of appropriate protective actions in accordance with established Protective Action Guides (PAGs).

2.3.1.3.2. Notification and Communication

In accordance with the CCNPP Emergency Response Plan, the CCNPP Emergency Director will notify Calvert County, St. Mary's County, Dorchester County, the MEMA and MDE. Notification will be by the dedicated CCNPP automatic ringdown telephone. Alternate communications is by commercial telephone or radio.

2.3.1.3.3. Command and Coordination

The Emergency Director and/or Recovery Manager will command CEG emergency operations from the on-site Technical Support Center or the Emergency Operations

Facility located near Prince Frederick. The Emergency Director will establish liaison with off-site agencies and aid the Recovery Manager in coordinating the Company's emergency response with the off-Site Area Emergency response in accordance with the CCNPP Emergency Response Plan.

2.3.1.3.4. Protective Actions

Based on Accident Assessment conducted by CCNPP, the Emergency Director will recommend appropriate protective actions to the Plume Zone Counties. This information will also be transmitted to the MEMA and MDE by CCNPP in accordance with the CCNPP Emergency Response Plan.

2.3.1.3.5. Parallel Actions

CCNPP has no assigned responsibility for this function.

2.3.1.3.6. Public Information

Upon declaration of either Site Area Emergency or General Emergency class accidents, CCNPP will activate the Joint Information Center. CEG officials will implement their public information program and will interface with State and County representatives in the release of emergency announcements to the news media.

2.3.1.4. Plan Maintenance

The overall responsibility for the maintenance and updating of the State of Maryland Radiological Emergency Plan lies with the MEMA. The Director, Emergency Preparedness Unit is responsible for maintaining and updating the CCNPP sections of the Plan.

Maintaining Preparedness discusses the coordination of on-site and off-Site Area Emergency Preparedness, training and exercise programs, and emergency plan maintenance.

TABLE 2-1

EMERGENCY FACILITY COMMUNICATIONS

This table identifies the primary and alternate methods of communication among emergency facilities which may be activated in response to an emergency at CCNPP.

FACILITY/CONTACT	EMERG. OPS. FAC. EOF	JOINT INFORMATION CENTER
Maryland State EOC		
1. MEMA Operations Group Chief	1. Dedicated Line Telephone	1. Commercial Telephone
2. MEMA Director	2. CEG Radio	2. CEG Radio
	3. Commercial Telephone	
Calvert County EOC		
1. Emergency Management Director	1. Dedicated Line Telephone	1. Commercial Telephone
	2. CEG Radio	
	3. Commercial Telephone	
Dorchester County EOC		
1. Director	1. Dedicated Line Telephone	1. Commercial Telephone
	2. CEG Radio	
	3. Commercial Telephone	
St. Mary's EOC		
1. Director	1. Dedicated Line Telephone	1. Commercial Telephone
2. Deputy Director	2. CEG Radio	2. Commercial Telephone
Emerg Ops. Facility (EOF)		
1. Emergency Director	N/A	1. Ded. Line Telephone
2. Recovery Manager		2. Commercial Telephone
Joint Information Center		
1. Pub. Information Support Manager	1. Dedicated Line Telephone	N/A
2. Corporate Spokesperson	2. Commercial Telephone	
MDE		
1. Sec. Of Environment	1. Dedicated Line Telephone	1. Commercial Telephone
2. Emergency Response Coord.	2. CEG Radio	
	3. Commercial Telephone	

FIGURE 2-1
CCNPP

10 MILE EPZ MAP (PLUME ZONE)

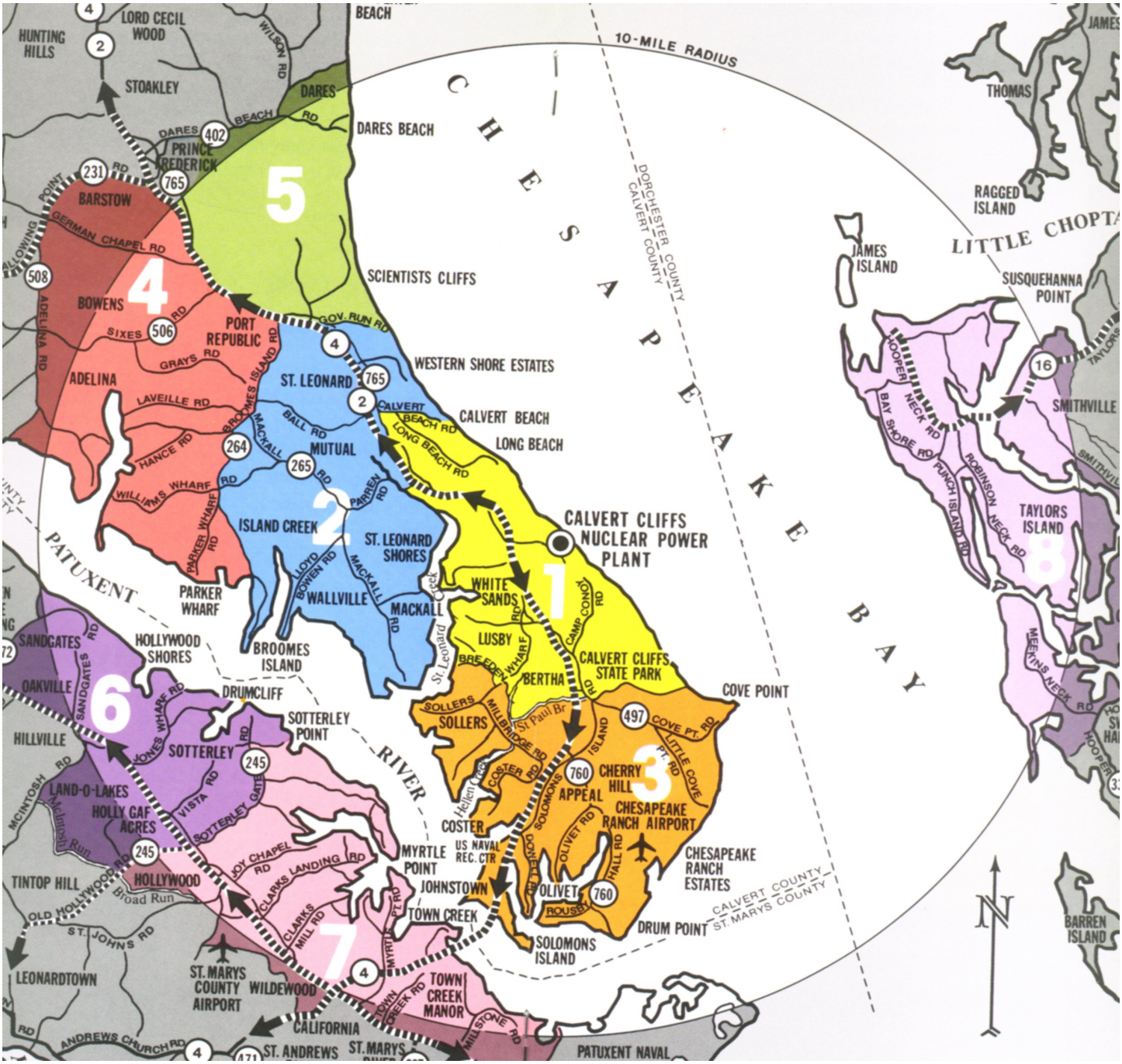

FIGURE 2-2
CCNPP
50 MILE EPZ MAP (INGESTION ZONE)

-

2.3.2. Peach Bottom Atomic Power Station (PBAPS)

2.3.2.1. Site Vicinity Description

Exelon Nuclear owns and operates PBAPS. PBAPS is located partly in York County and partly in Lancaster County (See Figure 2-3), in southeastern Pennsylvania on the west shore of Conowingo Pond near the mouth of Rock Run Creek. The site encompasses 620 acres. The plant is about 38 miles NNE of Baltimore, MD; 65 miles WSW of Philadelphia, PA; 45 miles SE of Harrisburg, PA; and 20 miles SSE of Lancaster, PA. Conowingo Pond is a reservoir formed by the backwater of Conowingo Dam, located about 9 miles downstream from PBAPS on the Susquehanna River. The nearest communities are Delta, PA and Cardiff, MD, located approximately 4 and 5 miles WSW of the site, respectively.

The area in the immediate vicinity of the plant is mostly agricultural. There are no commercial airports within a ten mile radius of the plant. No public highways pass through the plant and no major arterial highways pass near it. There are two access roads to the plant area: one from the nearby town of Delta accesses the decommissioned Unit One area; the other passes north of Delta and enters the plant area on the Units 2 and 3 side.

2.3.2.2. Plume EPZ Description

2.3.2.2.1. Cecil County Plume EPZ Description

Pennsylvania – Maryland State Line. South on Minns Road to Ridge Road. West on Ridge Road to Loft House Road. South on Loft House Road to its southernmost point, then project a line south to Slicers Mill Road. Southeast/South on Slicers Mill Road Route 276 then South on Route 276 to Route 273. West on Route 273 to Harrisville Road. South on Harrisville Road to Liberty Grove Road. West on Liberty Grove Road to Colora Road. South on Colora Road to Russell Road. West/Northwest on Russell Road to Liberty Grove Road to Doctor Jack Road. West/Northwest on Doctor Jack Road to McGlothin Road. West on McGlothin Road to its end point then project a line directly west to the Susquehanna River.

2.3.3.2.2.2. Harford County Plume EPZ Description

From Pennsylvania - Maryland State line, South on Fawn Grove Road to Federal Hill Road (Route 165). Federal Hill Road SW to St. Clair Bridge Road. St. Clair Bridge Road South to Holly Cross Road. Holly Cross Road East to Rocks Road (Route 24). South on Rocks Road to Cherry Hill Road. NE on Cherry Hill road to Grier Nursery Road. South on Grier Nursery Road to Walters Mill Road. East on Walters Mill Road to Allibore Road. East on Allibore Road to Forge Road. North on Forge Road to Deer Creek. Deer Creek to Darlington Road (Route 161). Darlington Road North to Price Road. Price Road to Stafford Road to Strafford Bridge to Craigs Corner Road. Line NE across Susquehanna River to West Rock Station in Cecil County.

2.3.2.3 Concept of Operations

2.3.2.3.1. Emergency Organization

PBAPS has developed an Emergency Organization to respond to an emergency situation at the site, which consists of two groups; the Emergency Response Organization and the Recovery Organization.

2.3.2.3.2. On-Site Emergency Organization

Under conditions which activate the emergency plan, a member of Shift Management assumes the role of Shift Emergency Director and activates appropriate portions of the emergency response organization.

Direction and coordination of on-scene emergency actions under the Emergency Director are the responsibilities of the Emergency Team Leaders. The Station Emergency Director operating from the Technical Support Center (TSC) assumes primary direction for assessment and recommendation of corrective action activities. Shift Management maintains authority for actual plant operations and for implementing recommendations of the Station Emergency Director.

When the Emergency Operations Facility (EOF) is activated, the Corporate Emergency Director assumes overall command and control of the emergency organization. The Corporate Emergency Director shall provide Protective Action Recommendations to appropriate state or local authorities and perform State and local notifications.

2.3.2.3.3. Recovery Organization

The PBAPS plan also provides for a Recovery Organization which is capable of continuous management and implementation of large-scale resources involved in planning for recovery and restoration. When the Recovery Organization is implemented, certain elements of the Emergency Response Organization are expected to be retained.

The evolution from the initial response phase to the recovery phase is expected to take place after plant conditions are sufficiently stable. The need and timing for a recovery phase organization is determined jointly by the Station Emergency Director and the Corporate Emergency Director. The Recovery Manager has overall responsibility for the recovery.

The recovery phase organization ensures proper management of augmented personnel resources, including Exelon Nuclear, General Electric, Bechtel, contractors, and other utilities, and the physical facilities needed to support them and appropriate liaison to offsite agencies.

2.3.2.3.4. Agreements

Agencies which will make certain services available in the event of an emergency have letters of agreement so stating. These agreements are included in the State Emergency Operations Plan.

2.3.2.3.5. Emergency Facilities

2.3.2.3.5.1. Joint Information Center

The Joint Information Center located at the Emergency Operations Facility in Coatesville, PA, is owned and maintained by Exelon. Exelon Nuclear maintains facilities and equipment necessary to accommodate the Exelon, federal and state media representatives at this facility. Communications are available linking the Joint Information Center to the other emergency facilities and providing communications to the news media.

The Public Information Director will coordinate all Corporate and technical information releases concerning on-site conditions relating to Peach Bottom Atomic Power Station provided by the Corporate Spokesperson.

2.3.2.3.6. Emergency Communications

Table 2-1 identifies methods of communication among PBAPS and the off-site emergency facilities and centers.

Exelon has installed an emergency prompt notification communication system which links together key on-site and off-site emergency facilities which would be activated in response to an emergency at PBAPS. This emergency system consists of dedicated line telephones. Emergency centers on this system include the Control Room, Technical Support Center (TSC), Operations Support Center (OSC) and the Emergency Operations Facility (EOF). Off-site emergency centers on the system include the two Maryland plume zone counties' EOCs (Cecil and Harford Counties), the Maryland State EOC, the Pennsylvania State EOC, and Lancaster, Chester and York County EOC's (Pennsylvania Plume Zone Counties).

The dedicated line is a priority ring down system. The system may be activated for conferencing with all parties or selectively activated by any of the on-site centers. When the system is activated by an off-site center, it will ring in the Control Room, Technical Support Center and the Emergency Operations Facility. An additional dedicated conference line is provided at the State, Cecil and Harford County EOC's and Maryland Department of Environment (MDE).

A radio system links PBAPS with MEMA, MDE, Cecil and Harford County EOCs, Maryland State Police, Exelon headquarters and other facilities in Pennsylvania.

2.3.2.3.7. Emergency Response Plan Implementation

2.3.2.3.7.1. Initiation Phase

A specific notification sequence has been established for each accident class providing the mechanism for alerting the responsible State and County Agencies for an emergency condition at the site. Initial notification will be made to Cecil County, Harford County, and MEMA via the dedicated telephone system. Notification of the State and Counties will be received either by the Emergency Operations Centers or after duty hours, for the counties, at their designated communications centers. The initial notification will include the information listed on the PBAPS "Emergency Notification Report". (See Attachment 9-4.2)

During the Initial Phase of less severe accidents, PBAPS may request support from the Counties or State. During severe emergencies, State and County agencies will receive follow-up notifications from PBAPS providing updated accident information and technical advice.

2.3.2.3.7.2. Operational Phase

The Operational Phase begins following the initial notification of the State and/or Counties by PBAPS and the initiation of the off-site emergency response in accordance with Annex Q. It consists of follow-up communications among Maryland and Pennsylvania (State and County EOCs); the Maryland Department of the Environment's Accident Assessment Center, the Pennsylvania Bureau of Radiation Protection and PBAPS. PBAPS will communicate information such as meteorological conditions, results of off-site radiological monitoring, changes in predicted off-site dose projections, specific information regarding plant status, effectiveness of operator efforts to mitigate the emergency and other information, as necessary. PBAPS will receive information on the progress of respective State and County emergency operations.

2.3.2.4 Summary Procedures

Procedures for PBAPS are presented and summarized with regard to PBAPS responsibility and role.

2.3.2.4.1. Accident Assessment

PBAPS will classify the accident in accordance with the established plant accident classification system. PBAPS will report accident-related information and provide updates of accident status to the State EOC, Plume Zone Counties and the State Accident Assessment Center in accordance with the PBAPS Emergency Plan. Based on the accident assessment findings, PBAPS will recommend initiation of appropriate protective actions in accordance with established Protective Action Guides (PAGs). MEMA confirms that the plume zone counties have received required notifications.

2.3.2.4.2. Notification and Communication

The Emergency Director in command and control will notify MEMA, Cecil County, and Harford County at classifications Unusual Event, Alert, Site and General Emergency. Notification is by the dedicated prompt notification telephone. Alternate communications is by commercial telephone or radio. MEMA will notify MDE during non-business hours.

2.3.2.4.3. Command and Coordination

The Emergency Director in command and control will command the emergency from either the on-site Technical Support Center or the Emergency Operations Facility and will establish a liaison with off-site agencies in coordinating the emergency response.

2.3.2.4.4. Protective Actions

Based on Accident Assessment conducted by PBAPS, the Station or Corporate Emergency Director will recommend appropriate protective actions to MEMA, MDE and the Plume Zone Counties.

2.3.2.4.5. Parallel Actions

PBAPS has no assigned responsibility for this function.

2.3.2.4.6. Public Information

Upon declaration of an Alert, Site Area Emergency or General Emergency, PBAPS will activate the Joint Information Center. PBAPS officials will implement their public information program and will interface with Federal, State and County representatives in the release of emergency announcements to the news media.

2.3.2.5 Plan Maintenance

The overall responsibility for the maintenance and updating of the State of Maryland Radiological Emergency Plan lies with MEMA. Exelon Nuclear assists MEMA in maintaining and updating the PBAPS sections of the State Plan.

The Exelon Nuclear Standardized Radiological Emergency Plan and the Peach Bottom Atomic Power Station Annex, discuss the coordination of on-site and off-Site Area Emergency Preparedness and emergency plan maintenance.

TABLE 2.2

EMERGENCY FACILITY COMMUNICATIONS

This table identifies the primary and alternate methods of communications among emergency facilities which may be activated in response to an emergency at PBAPS.

FACILITY/CONTACT	EMERGENCY OPERATIONS. FACILITY (EOF)	JOINT INFORMATION CENTER
MEMA		
• Operations Group Chief • MEMA Director	• Dedicated Telephone System* • Commercial Telephone	• Commercial Telephone • Facsimile
Cecil County EOC		
• Director, EM & CDA	• Dedicated Telephone System • Commercial Telephone • Radio • Facsimile	• Commercial Telephone • Facsimile
Harford County EOC		
• Director Division of Emergency Operations	• Dedicated Telephone System • Commercial Telephone • Radio • Facsimile	• Commercial Telephone • Facsimile
Emerg. Ops. Fac. (EOF)		
• Corp. Emergency Director • EOF Director	• Commercial Telephone • Facsimile	
Joint Information Center		
• Public Information Center • Corporate Spokesperson		• Commercial Telephone • Facsimile
MDE		
• Secretary of Environment • Emergency Response Coord.	• Dedicated Line • Commercial Telephone • CEG Radio	• Commercial Telephone

SECTION 3

PLANNING BASIS

3.1 BASIC FUNCTIONS

The REP is based upon six functions outlining the actions required to meet a radiological emergency.

These functions are:

Accident Assessment

Notification and Communication

Command and Coordination

Protective Actions (includes Take Shelter, Thyroid Blocking with Potassium Iodide, Evacuation, Access Control, and Food, Water, Milk and Livestock Feed Control)

Parallel Actions (includes Emergency Medical Services, Radiation Exposure Control, Law Enforcement and Crime Prevention, Mass Care, Relocation and Reentry)

Public Information

Plans and procedures which address Public Health and Sanitation and Fire and Rescue for other than radiological emergencies at FNFs are currently in effect at State and local levels. These plans would also be used during a radiological emergency.

3.1.1 Accident Assessment

Accident Assessment is the evaluation of the actual and potential consequences of an unplanned release of radioactive material from a FNF. It includes an estimate of the atmospheric dispersion values, thyroid inhalation and whole body doses, deposition rates for ingestion exposures, environmental field monitoring, sample collection, and sample analysis. Accident Assessment provides the basis for determining the severity of the accident, initiating the appropriate Protective Actions, mobilizing the proper radiological response, and determining when emergency actions are no longer necessary.

3.1.2 Notification and Communication

Notification and Communication is the process of promptly notifying the governmental agencies and the public of an existing or potential radiological emergency situation.

Notification and Communication provides for 24-hour coverage in both communications methods and personnel and the completion of Accident Report Forms. Communications between the Emergency Operations Centers (EOC's), the governmental agencies, and the FNF are also outlined.

3.1.3 Command and Coordination

Command and Coordination identifies the government agency which has overall authority within each political entity during a radiological emergency situation. The governmental agency which coordinates activities within each political entity is also identified.

3.1.4 Protective Actions

Protective Actions are the measures taken in anticipation of or after an uncontrolled release of radioactive material. The purpose is to prevent or minimize abnormal radiological exposures to the public that would be likely to occur if the actions were not taken.

The decision to initiate a protective action may be a difficult process, with the benefits of taking the action weighed against the risk and constraints involved in taking, the action. The magnitude of the release, possible pathways to the population at risk, time available to take action, what action to take, and what the effects might be, must all be considered in the determination of Protective Actions. For a more complete discussion of Protective Actions and Protective Action Guides refer to Section 3.3.

The Protective Actions include Take Shelter, Potassium Iodide, Evacuation, Access Control, and Food, Water, Milk, and Livestock Feed Control.

Potassium Iodide

The use of stable iodine by the general public to protect against the uptake of inhaled radioiodine by the thyroid is recognized as an effective alternative or a supplement to evacuation for situations involving radioiodine releases when evacuation cannot be implemented or exposures occur during evacuation. Ingestion of KI is at the discretion of the Secretary of the Maryland Department of the Environment.

Take Shelter

Take Shelter is generally the notification of the public to go indoors, shut doors and windows, and shut off outside air ventilation systems. These actions provide shielding from direct radiation and protection from gases and vapors for a short period of time. Take Shelter should be considered when constraints, such as inclement weather, could render evacuation ineffective or undesirable.

Evacuation

Evacuation is the process of removing people from a hazardous area to a safe area for a short period (not more than a few days). It includes the notification to the public of evacuation actions and procedures as well as providing transport, if necessary, for the public to reception centers for further assignment to mass care centers.

Access Control

Access Control is the provision of traffic control which may include the establishment of roadblock barriers or other means to limit public entry into designated areas.

Access Control can be an effective protective action to prevent exposure to the public who might otherwise enter radiation or contaminated areas unnecessarily.

Food, Water, Milk, and Livestock Feed Control

Food, Water, Milk, and Livestock Feed Control is the restriction of consumption of these commodities and identification of alternate sources until the contamination has decreased (decayed) to safe levels.

3.1.5 Parallel Actions

Parallel Actions are put into effect after the Protective Actions have been initiated and include Emergency Medical Services, Radiation Exposure Control, Law Enforcement and Crime Prevention, Mass Care, Relocation and Reentry.

Emergency Medical Services

Emergency Medical Services includes ambulance service and treatment for the sick and injured, and treatment for the victims of radiological accidents.

Radiation Exposure Control

Radiation Exposure Control is the provision of a preplanned system for monitoring radiological exposure of the general public and monitoring and controlling exposure of emergency workers.

Exposure records will be kept of all emergency responders to the accident. Evacuees will be monitored for contamination and records of their estimated radiation exposure kept.

This involves the measurement and recording of personnel exposure by use of radiation detection instruments. Specific locations will be established to monitor the amount of radiation which may have been absorbed by an individual's thyroid.

Contaminated individuals will be sent to decontamination centers at evacuation or assembly areas which are equipped with showers to wash off the contamination. Equipment that may become contaminated will be sent to sites which have been designated for decontamination of equipment and materials. Monitoring and decontamination will be performed by individuals trained in the use of radiation detection instruments (radiation monitors) and decontamination procedures. Uncontaminated clothing will be provided, if necessary.

Law Enforcement and Crime Prevention

This action entails the use of law enforcement personnel to maintain civil order during and after the incident.

Mass Care

Mass Care is the provision of food, clothing, and shelter for evacuees. Reception centers will be established to provide basic services to those persons who have been evacuated. Routine medical services will be provided by medical organizations at the local level, if required.

Reentry

Reentry refers to temporary entry of an individual who is permitted to enter the restricted zone (evacuated area) under controlled conditions.

Return

Persons will be allowed to reenter an evacuated area when the potential radiation risk has been averted or when radiation levels have dropped to safe levels. It may be necessary for certain essential personnel to return even before the radiation levels have decreased. In addition, return may be allowed earlier for less radiosensitive persons such as adult males who may need to return to their homes or jobs. Criteria for return will require a balancing of remaining radiation risk and the cost of disrupted services, lost income, etc., resulting from the evacuation.

Relocation

Following a nuclear incident it may be necessary to relocate the public from areas where extensive deposition of radioactive materials has occurred until decontamination takes place. Households that have already been evacuated may be converted to Relocation status.

3.1.6 Public Information

The consistent and controlled release of public information concerning a radiological emergency situation is essential to retain the public confidence needed for the successful implementation of the REP.

Three organizations have the responsibility to provide radiological emergency announcements to the public:

1. Each FNF, for on-site matters;

2. Each County, for local, off-site matters; and

3. The State, for State-wide, off-site matters.

Each information source has its own jurisdictional responsibility, scope, and public information release methods and capabilities.

All FNF, County, or State public information announcements, however, will include as a minimum the following information:

1. Identification of agency/organization issuing the information;

2. Identification of the affected nuclear facility in question and the time of the accident;

3. Identification of the geographic areas affected by the emergency;

4. A brief description in layman's terms of the seriousness of the emergency situation;

5. The necessity for Protective Actions;

6. A description of State, County, Federal, or FNF response to the emergency; and

7. Identification of communication channels over which further information will be presented.

3.1.6.1 FNF Public Information Role and Responsibility

Each FNF affecting the State will establish a Joint Information Center (JIC) beyond the plume exposure pathway EPZ. The Joint Information Center will contain facilities for FNF representatives to meet with NRC, State, and County representatives for the purpose of coordinating the release of emergency announcements to the news media. The Joint Information Center will be activated during an emergency having or potentially having environmental consequences. The State and affected counties, if they so desire, will dispatch public information representatives to the FNF's Joint Information Center upon its activation.

3.1.6.2 County Public Information Role and Responsibility

The County Public Information Officer (PIO) will be in charge of the County's formal announcements. The County PIO will report on the radiological emergency situation and County operations. The County PIO will make all reasonable attempts to coordinate public information announcements with the State PIO to ensure consistent information release at State and local levels.

The County PIO has the responsibility to deliver comprehensive announcements to the citizens of that County. The announcements are to be provided on a regular basis. The County PIO will utilize all available local public media.

3.1.6.3 State Public Information Role and Responsibility

With the activation of the State Emergency Operations Center (SEOC), the State Public Information Officer (PIO) will coordinate the release of State announcements which relate to off-site activities.

The State PIO has the responsibility to provide accurate and continuous announcements to the general public. The State PIO will clear all announcements with the MEMA Director or designee and will provide information to County PIOs to ensure consistent information releases from the State and the County.

A State Public Information representative will be sent to the FNF's Joint Information Center to keep abreast of new developments, represent the State PIO, and participate in the coordination and timely exchange of FNF, County, State, and Federal information releases. The PIO from contiguous states will be included. A Maryland State PIO liaison will be dispatched for this purpose.

The State PIO will answer inquiries made by the public media on a scheduled basis.

The State PIO will present announcements by any of the following methods:

1. Formal news releases or news conferences;

2. Prerecorded public announcements;

3. Interviews - personal or by telephone; and

4. Telephone - public inquiry telephone line.

The State PIO may use all of the public information resources of all state departments and agencies, including public information personnel and equipment, for the duration of an emergency.

3.2 EMERGENCY PLANNING ZONES

The NRC/EPA document entitled, Planning Basis for the Development of State and Local Government Radiological Emergency Response Plans in Support of Light Water Nuclear Power Plants, NUREG-0396 (EPA 520/1-78-016), provides guidance to REP planning and development.

Prepared by a U.S. Nuclear Regulatory Commission and U.S. Environmental Protection Agency Task Force on Emergency Planning, NUREG-0396 presents the concept of generic Emergency Planning Zones (EPZs) as a basis for the planning of response actions which would reduce doses in the environs of nuclear facilities in the event of a serious power reactor accident. The EPZ concept is illustrated in Figure 3-1.

The Protective Action Guides (PAGs), accident considerations, and planning needs are factors central to the EPZ concept and development. The EPZs are designated as areas for which planning is recommended to assure that prompt and effective actions can be taken to protect the public in the event of an accident.

EPZs are considered essential for any accident response that would produce off-site doses in excess of the PAGS.

For commercial reactors, a radius of about 10 miles was selected for the plume zone and a radius of about 50 miles was selected for the ingestion zone. For research reactors, a radius of about 1 mile was selected for the plume zone and a radius of about 5 miles was selected for the ingestion zone. (See Table 3-1).

Although the radius for the EPZ implies a circular area, the actual shape would depend upon the characteristics of a particular site. The circular area or other defined area is for planning purposes. The EPZ is large enough to provide dose savings to the population in areas where the projected dose from design basis accidents could be expected to exceed the applicable PAGs under unfavorable atmospheric conditions. The EPZ is considered to be of sufficient size to provide substantial reduction in early severe health effects in the event of severe accidents.

3.2.1 Plume Zone

Principal exposure pathways in the plume zone are (a) whole body external exposure to gamma radiation from the plume and from deposited materials and (b) inhalation exposure from the passing radioactive plume. The time of potential exposure could range in length from hours to days.

3.2.2 Ingestion Zone

Principal exposure pathways in the ingestion zone would be from ingestion of contaminated water or foods, such as milk or fresh vegetables. The time of potential exposure could range in length from hours to months.

3.3 PROTECTIVE ACTIONS GUIDES

Following an accident involving a release of radioactive material into the atmosphere, there may be a need for rapid action to protect the public from radiation exposure. The U.S. Environmental Protection Agency provides guidance for the initiation of protective actions in its document entitled, Manual of Protective Action Guides and Protective Actions for Nuclear Incidents, EPA 400-R-92-001.

In the event a nuclear accident occurs, an estimate is made of the radiation dose which affected population groups may receive. This dose estimate is called the projected dose. A protective action is an action taken to provide dose savings when the benefits derived from such action are sufficient to offset any undesirable features of the protective action. The Protective Action Guide (PAG) is the projected dose which warrants taking protective actions.

A PAG never implies an acceptable dose. Since the PAG is based on a projected dose, it is used only as an "after the fact" effort to minimize the risk from an event which is occurring or has already occurred. For protective actions to be most effective they must be implemented as soon as possible after the decision to take the action has been made.

PAGs are the numerical projected doses which act as trigger points to initiate protective action. This projected dose does not include the unavoidable dose that has been received prior to the time the projection is made. PAGs are provided for three broad pathways of radiation exposure:

1. External exposure to the whole body from the radioactive cloud and deposited materials;

2. Internal exposure from the inhalation of radioiodine and particulates; and

3. Internal exposure from the ingestion of food, water, and milk contaminated with radioactivity.

3.3.1 Protective Action Guides for Plume Exposure

Recommended PAGs for the initiation of protective actions in the case of exposure to radionuclides in the atmosphere are presented in Table 3-2. These guidelines represent numerical values as to when, under the conditions most likely to occur, initiation of protective action is indicated to avoid radiation exposure that would otherwise result from the accident. When ranges are shown, the lowest value should be used if there are no major local constraints in providing protection at that level, especially to sensitive population. Local constraints may make lower values impractical to use, but in no case should the higher value be exceeded in determining the need for protective actions. PAGs are presented for both the general population and for emergency workers. Exposure in excess of the EPA PAGs for the general public must be authorized by the head of local government. It should be emphasized that exposure of emergency workers to these levels would only occur for the most compelling reasons.

3.3.2 Protective Action Guides for Exposure from Foodstuffs or Water

In the event of a major radiological accident, the food chain is a potential exposure pathway to large segments of the surrounding population. For example, the dose to the thyroid of a child from drinking milk contaminated with radioiodine through the atmosphere-pasture-cow-milk-child exposure pathway may be several times greater than the thyroid dose that the same child would receive breathing the air that resulted in the contamination of the pasture. Therefore, the size of the area over which milk and other foods may have to be controlled could be much larger than the size of the area where the Protective Actions of Take Shelter or Evacuation would be implemented. For commercial reactors a radius of about 50 miles was selected for the Ingestion Exposure Pathway Emergency Planning Zone. This zone is considered to be of sufficient size to provide for substantial reduction in health effects in the event of severe accidents.

3.3.3 Protective Actions

The decision to initiate a protective action may be a complex process with the benefits of taking the action being weighed against the risks and constraints involved in taking the action.usually No action would be taken by authorities if the risk of undesirable radioiodine effects is anticipated to be much less than the risk of actions taken. The ideal goal of providing a protective action is to provide the maximum protection of the public with the least cost and disruption.

3.3.3.1 Protective Action Guides

PAGs assume that the population group receiving radiation doses via the food chain receive only insignificant doses from other pathways such as external exposure or exposure resulting from inhalation of airborne radioactive materials. If this is not the case, the initiation of protective actions will be based on consideration of the total radiation dose from all pathways.

Dose levels are provided for those radionuclides which are felt to be of most significance in a radiological accident. These are Iodine-131, Cesium-134 & 137, Ruthenium 103 & 106, which are relatively abundant among the fission products, easily enter the food chain, and are taken up and retained by the human body.

The recommendations contained in this section are made with the expectation that the contamination of food in the event of a radiological accident will be controlled at the State and County levels. However, should food in interstate commerce become involved, the U.S. Food and Drug Administration will use these PAG recommendations as the basis

for regulatory action. Nothing in this section is intended to restrict protective actions to stated dose commitments. More conservative actions may be recommended as conditions warrant.

PAGs for human food and livestock feed have been promulgated by the U.S. Food and Drug Administration. Health risks to the public can be averted by limiting the radiation dose received as a result of consumption of accidentally contaminated food. This will be accomplished by: (1) setting limits, called Derived Intervention Levels (DILs) on the radionuclide activity concentration permitted in human food, and (2) taking protective actions to reduce the amount of contamination.

DILS apply during the first year after the accident. If there is concern that food will continue to be significantly contaminated beyond the first year, the long-term circumstances need to be evaluated to determine whether the DILs should continue or if other guidance may be more applicable.

Protective actions would be initiated subject to evaluation of the situation and would continue until, in the absence of the actions, the concentrations remain below the DILs. Protective actions can be taken to:

- avoid or limit, through precautionary measures, the amount of contamination that could become incorporated in human and animal feed, or
- delay or limit consumption of human food and animal feeds suspected of being contaminated until the concentration of contamination has been determined , or
- reduce the amount of contamination in human food and animal feeds.

The Protective Action Guides) PAGs) for the ingestion pathway are 5mSv (0.5 rem) for committed effective dose equivalent or 50 mSv (5 rem) committed dose equivalent to an individual tissue or organ, whichever is more limiting. Intervention levels of dose are radiation doses at which introduction of protective actions should be considered.

Table 3-5 –intentionally left blank.

Table 3-6 –intentionally left blank.

3.3.3.2 Protective Actions for Foods Confirmed to be Contaminated

Because of the conservative approach used in setting the Preventive PAGS, initiation of actions at the Preventive PAG level should significantly reduce the probability that doses exceeding the Emergency PAG would occur. At projected dose levels that equal or exceed the Emergency PAGS, implementation of all or part of the Preventive PAG protective actions will be considered. In addition, it may be necessary to condemn food or milk from a particular area. Prior to taking such actions, the following factors will be considered.

- The feasibility of implementing other protective actions previously discussed.
- The relative proportion of the total diet by weight constituted by the item in question.

- The food value of the item in question and the availability of uncontaminated food or substitutes having the same nutritional properties.
- The relative contribution of other foods and other radionuclides to the total projected dose.
- The time and effort required to effect corrective action.

3.3.4 Termination of Protective Actions

The lifting of controls for protective actions may be justified on the basis of cost savings when the corresponding health risks have been adequately reduced. For example, the costs incurred by the public and State and County governments in maintaining Food, Water, Milk, and Livestock Feed Control will exceed the risk reduction value of these controls after a certain period of time. At this point, the controls may be lifted. The costs for maintaining these controls should remain relatively constant with respect to time, while their significance in reducing risk will decrease as the released nuclides disperse or decay.

3.4. ALLOWABLE CONTAMINATION LEVELS

Guidance on contamination levels which will be considered allowable for skin; for the release of personnel; for the reuse of clothing, equipment, and materials; and for the reentry to contamination areas is available from MDE reference material.

3.5 FIXED NUCLEAR FACILITIES - MARYLAND AND CONTIGUOUS STATES

The State of Maryland can be affected by both commercial nuclear facilities and research facilities within the State and contiguous states. Figure 3-2 shows the geographical location of each Fixed Nuclear Facility (FNF) site. The Plume Exposure Pathway Zone (approximately a 10-mile radius from the site) and the Ingestion Pathway Zone (approximately a 50-mile radius from the site) are shown for the commercial nuclear facilities.

3.5.1 Commercial Nuclear Facilities

Maryland is influenced by the EPZs from six FNF sites. One site is located within the State and the other five sites are located in contiguous states.

The six FNF sites are:

FNF Name	Location	Utility
Calvert Cliffs Nuclear Power Plant	Lusby, MD	Constellation Energy Group
Peach Bottom Atomic Power Station	Peach Bottom Township, PA	Exelon Nuclear
Salem/Hope Creek Nuclear Generating Stations	Hancock's Bridge, NJ	Public Services Electric & Gas Co.
Three Mile Island Nuclear Station	Londonderry Township, PA	Exelon
North Anna Power Station	Mineral, Va	Dominion
Limerick Generating Station	Limerick Township, PA	Exelon Nuclear

A listing of commercial nuclear facilities and corresponding Plume Zone Counties and Ingestion Zone Counties is provided in Table 3-12 Table 3-11 shows those Ingestion Zone Counties which

are designated as evacuation support counties and the Plume Zone Counties for which they provide support.

3.5.2 Research Facilities

In addition to the commercial facilities, there are three research reactors located in Maryland or contiguous states which could have potential impact on Maryland. The research reactors are:

Licensee	Location
National Institute of Standards and Technology	Gaithersburg, MD
University of Maryland	College Park, MD
Department of Defense	Bethesda, MD

3.6 EMERGENCY CLASSIFICATION

Each FNF addressed by this plan has established or adapted its radiological accident classification in basic conformance with current Federal and State regulatory guidance. The classification systems are categorized according to potential offsite doses and are related to predetermined plant parameters, radioactive release potentials, or measured offsite radiation levels.

Since each FNF and/or contiguous state may have a unique classification system, a reference classification system for the REP has been developed. The guidance presented in NUREG-0654 Appendix 1 was used to establish this reference classification system. Each FNF and/or contiguous state accident classification system has been categorized according to the offsite response required by State and local officials with respect to notification, radiological response, and recommended protective measures. The four classes, in order of increasing severity, are Unusual Event, Alert, Site Area Emergency, and General Emergency. State and County response to each accident class is discussed in Section 5.4.

3.6.1 Unusual Event

An Unusual Event is classified as a condition with potential plant safety degradation. This event has no potential for radioactive material release requiring off-site response or monitoring unless safety systems degrade further.

3.6.2 Alert

An Alert classification is declared when events are in progress or have occurred involving actual or potential substantial degradation of plant safety. Any radioactive releases resulting from these events are expected to be limited to small fractions of EPA Protective Action Guides exposure levels.

3.6.3 Site Area Emergency

The Site Area Emergency classification is declared when events are in progress or have occurred involving actual or likely major failures of plant functions needed for public protection. Any releases are not expected to exceed EPA Protective Action Guides exposure levels beyond the site boundary.

3.6.4 General Emergency

The General Emergency classification indicates that events are in progress or have occurred involving actual or imminent substantial core degradation or melting and a potential for loss of containment integrity. Releases can be reasonably expected to exceed EPA Protective Action Guides exposure levels offsite for more than the immediate site area.

The purpose of this classification is to 1) initiate predetermined Protective Actions, 2) provide continuous assessment of information from onsite and offsite organization measurements, 3) initiate additional measures as indicated by actual or potential releases, 4) provide consultation with offsite authorities, and 5) provide informational updates for the public through offsite authorities.

3.7 SPECIAL CONCERNS

In the event of a radiological emergency, certain concerns will require special attention in regard to accident notification and to implementation of Protective Actions and Parallel Actions.

Concerns include:

Schools
Hospitals
Nursing Homes
Correctional Institutions
State Parks and Recreation Areas/Facilities
Air Traffic Control

The public will be asked to aid neighbors who are handicapped, impaired, or with special needs that require special attention.

Each Appendix will detail the special concerns within its REP planning area.

Special procedures and detailed instructions to the public for each special concern will be contained in public information pamphlets. These pamphlets will be jointly developed by the State, respective plume Zone County, and the FNF concerned. The pamphlets will be updated and distributed on an annual basis. See Section 6.4.2 for a general description of Public Information Training.

TABLE 3-1

SIZE OF THE EMERGENCY PLANNING ZONE[1]

Accident Phase	Exposure Pathway	EPZ Radius
Plume Exposure Pathway	Plume (external) Deposited Material (external) Plume Submergence (inhalation)	About a 10 mile radius for commercial reactors; About 1 mile radius for research reactors
Ingestion Pathway	Food and Water (internal)	About a 50 mile radius for commercial reactors; About 5 mile radius for research reactors

Note:

1. For research reactors, a radius equal to one-tenth of that of commercial reactors has been adopted by the State of Maryland for planning purposes.

Source:

Planning Basis for the Development of State and Local Government Radiological Emergency Response Plans in Support of Light Water Nuclear Power Plants, NUREG-0396 (EPA 520-1-78-016), May 1992, U.S. Nuclear Regulatory Commission and U.S. Environmental Protection Agency.

TABLE 3-2

RECOMMENDED PROTECTIVE ACTION GUIDES FOR PLUME EXPOSURE

Projected Dose (Rem)	Recommended Action	Comments
< 1 rem	No protective action required	Previously recommended protective Actions may be reconsidered or terminated.
	State may issue an advisory to seek shelter and await further instructions or to voluntarily evacuate.	
1 – 5 rem b	Evacuation (or sheltering)	Evacuation (or, for some situations, sheltering) should normally be initiated at 1 rem. Further guidance is provided in EPA-400-R-92-001 Sect. 2.3.1.
25 rem c	Administration of stable iodine	Requires approval of State or local health officer

a Sheltering may be the preferred protective action when it will provide protection equal to or greater than evacuation, based on consideration of factors such as source term characteristics, and temporal or other site-specific conditions.

b The sum of the effective dose equivalent resulting from exposure to external sources and the committed effective dose equivalent incurred from all significant inhalation pathways during the early phase. Committed dose equivalents to the thyroid and to the skin may be 5 and 50 time larger, respectively.

c Committed dose equivalent to the thyroid form radioiodine.

NOTE

Further guidance is provided in MDE Radiological Standard Operating Procedure

TABLE 3-2 (CONT.)

Projected Dose (Rem) to Emergency Workers	Recommended Action	Comments
10 rem[c]	Administration of stable iodine.	Requires approval of State or Local Medical officials.

c Committed dose equivalent to the thyroid from radioiodine.

Dose Limit[d] (Rem) for Emergency Workers	Recommended Action	Comments
5 rem	All	
10 rem	Protecting valuable property	Lower dose not practicable
25 rem	Life saving or protection of Large populations	Lower dose not practicable
>25 rem	Life saving or protection of Large populations	Only on a voluntary basis to persons full aware of the risks involved (See Tables 3-3 and 3-4).

d Sum of external effective dose equivalent and committed effective dose equivalent to nonpregnant adults from exposure and intake during an emergency situation. Workers performing services during emergencies should limit dose to the lens of the eye to three times the listed value and doses to any other organ (including skin and body extremities) to ten times the listed value. These limits apply to all doses from an incident, except those received in unrestricted areas as members of the public during the intermediate phase of the incident (see EPA-400-R-92-001 Chapters 3 and 4).

TABLE 3-3
Health Effects Associated with Whole-Body Absorbed Doses Received Within a Few Hours[a]

Whole Body Absorbed dose (rad)	Early Fatalities[b] (percent)	Whole Body Absorbed dose (rad)	Prodromal Effects[c] (percent affected)
140	5	50	2
200	15	100	15
300	50	150	50
400	85	200	85
460	95	250	98

a Risks will be lower for protracted exposure periods.

b Supportive medical treatment may increase the dose at which these frequencies occur by approximately 50 percent.

c Forewarning symptoms of more serious health effects associated with large doses of radiation.

Table 3-4
Approximate Cancer Risk to Average Individuals from 25 Rem Effective Dose Equivalent Delivered Promptly

Age at exposure (years)	Appropriate risk of premature death (deaths per 1,000 persons exposed)	Average years of life lost if premature death occurs (years)
20 to 30	9.1	24
30 to 40	7.2	19
40 to 50	5.3	15
50 to 60	3.5	11

TABLE 3-5
Derived Intervention Level (DIL) or Criterion for Each Radionuclide Group (a), (b)

Radionuclide Group	(Bq/kg)	(pCi/kg)
Sr-90	160	4300
I-131	170	4600
Cs-134 + Cs-137	1200	32,000
Pu-238 + Pu-239 + Am-241	2	54
Ru-103 + Ru-106 (c)	C3/6800 + C6/450 < 1	C3/180,000 + C6/12,000 < 1

a The DIL for each radionuclide group (except for Ru 103 + Ru-106) is applied independently. Each DIL applies to the sum of the concentrations of the readionuclides in the group at the time of measurement.

b Applicable to foods as prepared for consumption. For dried or concentrated products such as powered milk or concentrated juices, adjust by a factor appropriate to reconstitution, and assume the reconstitution water is not contaminated. For spices, which are consumed in very small quantities, use a dilution factor of 10.

c Due to the large difference in DILs for Ru-103 and Ru-106, the individual concentrations or Ru-103 and Ru-106 are divided by their respective DILs and the summed. The sum must be less than one. C3 and C6 are the concentrations, at the time of measurement, for Ru-103 and Ru-106 respectively.

SOURCE:

Accidental Radioactive Contamination of Human Food and Animal Feeds, Federal Register, Vol. 47, No. 205, August 13, 1998, U.S. Food and Drug Administration.

TABLE 3-6

Commercial Nuclear Facilities and Affected Maryland Counties

Local jurisdiction	**Calvert Cliffs Nuclear Power Plant**	**Peach Bottom Atomic Power Station**	**Salem/Hope Creek Generating Stations**	**Three Mile Island Nuclear Station**	**Limerick Generating Station**	**North Anna Power Station**
Annapolis	Ingestion					
Anne Arundel	Ingestion Evac. Support	Ingestion				
Baltimore		Ingestion		Ingestion		
Baltimore City		Ingestion				
Calvert	Plume, Ingestion					
Caroline	Ingestion		Ingestion			
Carroll		Ingestion		Ingestion		
Cecil		Plume, Ingestion	Ingestion	Ingestion	Ingestion	
Charles	Ingestion Evac. Support					Ingestion
Dorchester	Plume, Ingestion					
Frederick				Ingestion		
Harford		Plume, Ingestion	Ingestion	Ingestion		
Howard		Ingestion				
Kent	Ingestion	Ingestion	Ingestion			
Pr. George's	Ingestion					
Queen Anne's	Ingestion	Ingestion	Ingestion			
Somerset	Ingestion	Ingestion				
St. Mary's	Plume, Ingestion					
Talbot	Ingestion					
Washington				Ingestion		
Wicomico	Ingestion					
Worchester	Ingestion					

TABLE 3-7

EVACUATION SUPPORT COUNTIES

EVACUATION SUPPORT COUNTY	PLUME ZONE COUNTIES REQUIRING EVACUATION SUPPORT: CCNPP	PLUME ZONE COUNTIES REQUIRING EVACUATION SUPPORT: PBAPS
Anne Arundel	Calvert	
Charles	Calvert St. Mary's	
Baltimore		Harford

FIGURE 3-1, CONCEPT OF EMERGENCY PLANNING ZONES

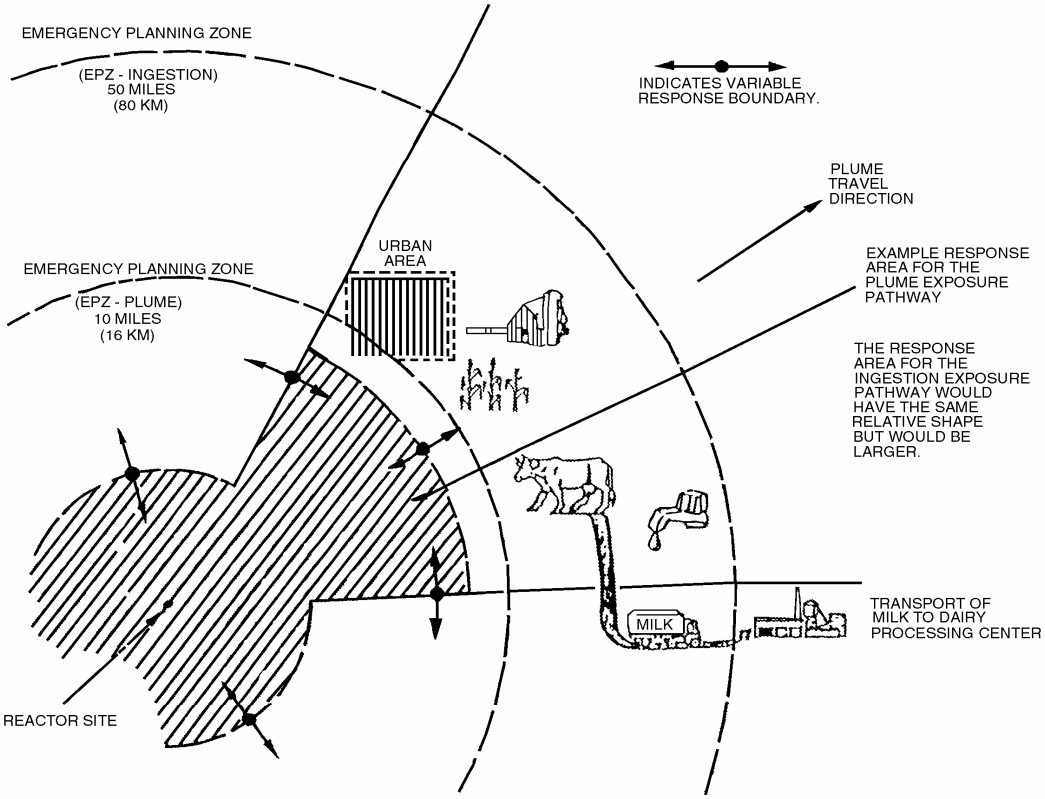

FIGURE 3-2, NUCLEAR REACTOR SITES IN AND AROUND MARYLAND

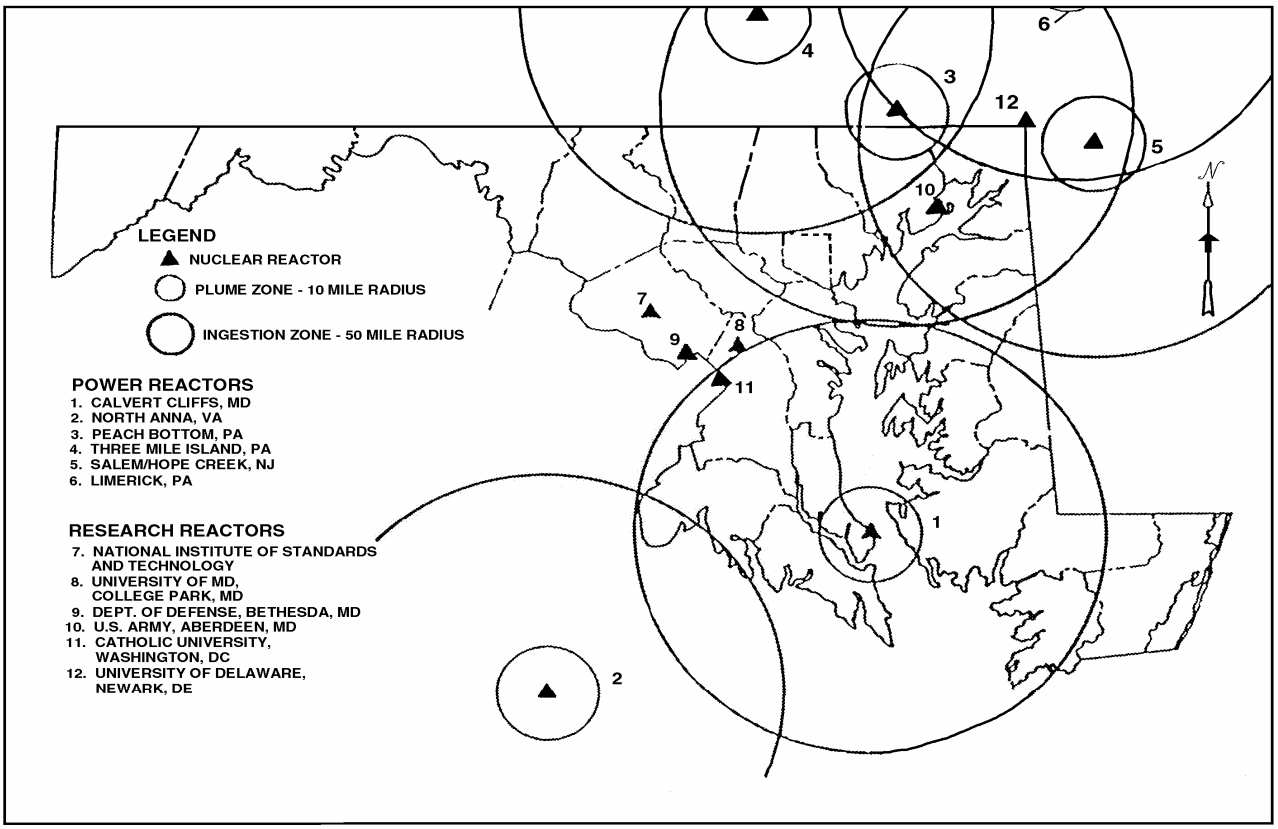

SECTION 4

GENERAL POLICIES

The policies that will facilitate the implementation of the REP in the event of a radiological emergency are described in this section. The response to the emergency is necessarily limited by resources and capabilities. The REP is based upon current capabilities.

4.1 ROLE OF THE FNF

In the event of an accident at an FNF, the FNF will promptly inform County and State authorities of the classification of the incident and any recommended Protective Actions. The FNF will partially or fully activate the onsite Technical Support Center and the near-Site Area Emergency Operations Facility commensurate with the accident class. Meteorological data, dose projections, and plant status updates will be provided on a regular basis to allow for the effective coordination of on site and offsite Area Emergency response and to ensure public safety.

4.2 ROLE OF THE INDIVIDUAL

In the event of a radiological emergency, the general public will be asked to listen to emergency information notification on the radio or television and to follow the instructions of governmental agencies and emergency workers.

Individuals will be asked to utilize their own resources.

If evacuation actions and procedures are directed, individuals will be asked to use their private motor vehicles for evacuation purposes and to bring with them blankets, and any special medications or other necessities.

4.3 ROLE OF THE LOCAL JURISDICTION AND THE STATE

In the event of a radiological emergency, each County will mobilize and utilize all resources available to it to mitigate the emergency. The State and Counties will implement planned radiological emergency response operations commensurate with the severity of the situation.

Generally, when County resources are exhausted, inadequate, or unavailable to mitigate an emergency, a County will request assistance from the State (through MEMA) in accordance with existing emergency procedures. However, this plan anticipates deficiencies in some resources and provides for them before an emergency occurs. When State resources are provided, they will be in support of the requesting County unless State law dictates otherwise. The State will continue its overall coordination role. When determined by the Governor, the State may assume direction and control. In that event, Counties must comply with the direction and control and continue coordination and utilization of their resources in conformance thereto.

4.4 ROLE OF THE FEDERAL GOVERNMENT

In a radiological emergency, multi-agency Federal role is described in the National Response Plan. Following are various Federal departments/agencies and their respective responsibilities in support of radiological emergency response:

The Federal Emergency Management Agency (FEMA) is the coordinating agency for a multi-agency radiological emergency response. MEMA will notify FEMA Region III during a radiological event. It is anticipated the Secretary of the Department of Homeland Security will appoint FEMA as the lead agency for federal offsite response to a radiological Incident of

National Significance. If the site is designated a crime scene, the Federal Bureau of Investigation (FBI) may become Lead Federal Agency.

The Nuclear Regulatory Commission (NRC) is responsible for nuclear power plant licensee preparedness. The NRC will automatically respond to the plant site and manage all Federal actions onsite, develop or evaluate protective action and re-entry recommendations and assist in implementing these actions.

The U.S. Department of Energy (DOE) is responsible for offsite monitoring and assessment in support of the State during the initial phase of a radiological emergency. DOE will assist the NRC in the development or evaluation of public protective actions and re-entry recommendations.

The Environmental Protection Agency (EPA) will coordinate intermediate and long-term offsite radiation monitoring activities, with use of DOE and other Federal agency resources.

The U.S. Department of Agriculture is primarily concerned with the food ingestion pathway. Its goal is the decontamination and control of the food chain.

The U.S. Department of Health and Human Services is responsible for protecting the health of the citizens in radiological emergencies.

The U.S. Department of Commerce's role is to provide weather forecast information through the National Oceanic and Atmospheric Administration (NOAA), technical assistance through the Institute of Standards and Technology, and industrial rehabilitation through the Office of Industrial Mobilization.

The U. S. Department of Transportation is responsible for coordination and assistance involving transportation of people and materials to, from, around, or through areas affected by a nuclear incident. Additional responsibilities include regulation of transport of nuclear hazardous materials and supervision of emergency medical service programs.

The U. S. Department of Defense's role is to employ available resources not engaged in essential military operations, to assist authorities in restoring order and civil control, to return essential facilities to operation, to prevent unnecessary loss of life, to alleviate suffering, and to take other actions as directed.

The U. S. Department of Housing and Urban Development is responsible for planning and providing emergency housing for long term evacuated residents of radiologically affected areas.

The U. S. Department of Interior provides advice and assistance concerning hydrologic and natural resources, including fish and wildlife, to Federal, State, and County governments upon request.

The National Communications System (NCS) coordinates and manages national security and emergency preparedness communications for the federal government under all circumstances. NCS will also provide assistance to State agencies in meeting their communications requirements.

The full Federal response to a radiological emergency is procedurally outlined and coordinated within the Federal Radiological Emergency Response Plan (FRERP). It is coordinated according to the National Response Plan (NRP) and the National Incident Management System (NIMS). Actual implementation of the FRERP may occur through the phasing in of selected aspects of the plan based on specific needs of the State. DOE can provide radiological emergency support to the State through a two-phase response outlined within its Radiological Assistance Program

(RAP) and Federal Radiological Monitoring and Assessment Program (FRMAP). The RAP is a regionally based subpart of FRMAP, which is also a subpart of the FRERP. See attachments 9-6, 9-7, and 9-8 for additional information on FRMAP, RAP, and FRERP, respectively.

State and County government agencies maintain their authority and will command the implementation of the Federal emergency response support. The mobilization of Federal support does not relieve the State and Counties from their responsibilities regarding radiological emergency response. Specific Federal resources expected, estimates of arrival times at FNF sites, and State and County resources to support the Federal response are contained in State and County agency standard operating procedures.

4.5 MUTUAL AID AGREEMENTS

4.5.1 County

Local mutual aid agreements exist between the major political subdivisions of Maryland. Subtitle 8 "The Maryland Emergency Management Assistance Compact (MEMAC)" of Title 14 "Emergency Management" of the Public Safety Article of the Annotated Code of Maryland is the primary method for local jurisdictions to share resources.

4.5.2 State

Memorandums of Understanding (MOU) have been executed between Maryland and the states of Pennsylvania, Delaware, and New Jersey. There is in existence a mutual aid agreement between Maryland, the District of Columbia, Virginia, and West Virginia. The Emergency Management Assistance Compact (EMAC) is a national mutual aid system.

SECTION 5

CONCEPT OF OPERATIONS

5.1 EMERGENCY RESPONSE ORGANIZATION

Upon receipt of notification of an accident at an FNF which requires State and County government response, the State and the affected Counties Emergency Operations Centers (EOCs) will be activated. Throughout the duration of the emergency, these EOCs will provide unified command for emergency operations and information.

Maryland law gives the Governor wide powers in the event of disaster beyond local control and authorizes the Governor to delegate such powers as seen fit to the Director MEMA. The MEMA, under the direction of the Governor, will coordinate State, private, and Federal agency response, as well as that from the FNF, to aid the County emergency operations from the State EOC. The MEMA will direct County requests for assistance to the appropriate State or federal agency. Some State, private, and Federal assistance can also be provided directly without going through the MEMA. Examples include assistance from local State Police posts or military installations having mutual aid agreements with the affected County.

County emergency operations will be under the overall direction of the head of County government. State and Federal personnel or resources made available for assistance in local emergencies will be in support of County operations unless otherwise provided for by law.

It is important that the MEMA be kept informed of the assistance requested and received at all levels to prevent duplication. Figure 5-1 shows the overall emergency response organization for the State of Maryland.

5.2 EMERGENCY FACILITIES

5.2.1 State Emergency Operations Center (EOC)

The State of Maryland EOC is located in the MEMA Headquarters at Camp Fretterd Military Reservation, 5401 Rue Saint Lo Drive, Reisterstown, Maryland 21136. It provides a secure, protected headquarters and communications center for the direction and control of all emergency and disaster operations in the State. Emergency power is provided by diesel generators. The EOC will be in operation at all times with staffing varying according to circumstances. State agencies having emergency functions will provide a representative to the State EOC. Each representative will have the authority, unless provided for otherwise by law, to commit the resources of the organization represented and to speak on behalf of the head of that organization in the event of an extreme emergency.

The EOC is capable of continuous (24-hour) operations for a protracted period.

The Maryland Joint Operations Center (MJOC) contains radio, internet, facsimile and land-line equipment to provide adequate communications with every major political subdivision of the state and with the Emergency Alert System and the National Weather Service. In addition, the state EOC is equipped with the National Warning System (NAWAS) which enables instant contact with all Plume Zone Counties. NAWAS terminals are manned on a 24-hour basis at both the State and County levels. Dedicated line telephone systems provide communications between State EOC and FNFs whose plume zones affect Maryland. A detailed communications resource listing is contained in the State of Maryland Emergency Operations Plan.

5.2.2 County Emergency Operations Center

Each Plume Zone and Ingestion Zone County will direct its operations from its EOC. Each County EOC is equipped with NAWAS for communications with each other and with the State EOC. In addition, the three Plume Zone Counties surrounding Calvert Cliffs Nuclear Power Plant and the two Maryland Plume Zone Counties surrounding Peach Bottom Atomic Power Station have been provided with dedicated line telephone systems. These systems provide communications to the Plume Zone Counties' EOCs, the State EOC, and the Accident Assessment Center from each FNF. [County EOCs are discussed in more detail in their respective plans].

5.2.3 Accident Assessment Center (AAC)

The radiological health aspect of a nuclear accident is the responsibility of the Department of the Environment (MDE). The Accident Assessment Center is presently located at MDE offices on 1800 Washington Blvd., Baltimore, MD 21230, for an incident at Peach Bottom and at the Emergency Operations Facility near Prince Frederick during a Calvert Cliffs incident. The AAC will assess an accident at FNF, evaluate the potential health effects, and recommend the necessary Protective Actions to the Secretary, MDE. The AAC will also serve as a central point for the compilation and analysis of all field monitoring data and will coordinate the analysis of sample media. All material necessary to perform off-site dose projections due to plume and ingestion exposure will be permanently stored at the AAC. The AAC will utilize existing communications systems for coordinating with all agencies providing support in the Accident Assessment function. Dedicated line telephone systems provide communications between the AAC and Calvert Cliffs Nuclear Power Plant and the AAC and Peach Bottom Atomic Power Station.

5.2.4 Near-Site Area Emergency Operations Facility (EOF)

The near-site EOF is an emergency response facility located near the Fixed Nuclear Facility (FNF) for the purpose of providing continuous coordination and evaluation of FNF, State, County, and Federal activities during an emergency having potential environmental consequences. The initial function of the EOF is to evaluate the magnitude and effects of actual or potential radioactive releases from the FNF and to recommend appropriate off-site protective measures. The MEMA will dispatch a Liaison Officer and the MDE and DNR/PPRP will dispatch a representative to the near-site EOF upon its activation. Dedicated line telephone systems provide communications between the EOF, State and Plume Zone Counties' EOCS, and the AAC.

5.2.5 Joint Information Center (JIC)

Each FNF affecting the State will establish a Joint Information Center. The Joint Information Center will contain facilities for FNF representatives to meet with NRC, State and County representatives for the purpose of coordinating the release of emergency announcements to the news media. The Joint Information Center will be activated during an emergency having or potentially having environmental consequences. The State and affected counties will dispatch public information representatives to the FNF's Joint Information Center upon its activation.

5.3 EMERGENCY COMMUNICATIONS

Table 5-1 generically identifies the primary and alternate methods of communications between the EOCs and other emergency facilities. Primary and alternate contacts are identified by title for

each facility. Refer to each Appendix for site specific facilities. Dedicated line telephone systems are also discussed in each FNF's Emergency Communications Section.

The Maryland Institute for Emergency Medical Services Systems (MIEMSS) Communication System provides a coordinated 24-hour communications link between all County EOCS, the State EOC, and all hospitals and field ambulances within the State. All County EOCs, the State EOC, and hospitals are accessed through a dedicated telephone network from the Systems Communications Center (SYSCOM). Radio communications through SYSCOM and from various EOCs and hospitals provides a communications line with field ambulances.

5.4 PLAN IMPLEMENTATION

The implementation of the REP is accomplished in two phases. The Initiation Phase is a pre-planned response to the accident classes as identified in Section 3.6 of this plan. This phase establishes initial communications contact between the FNF and State and local governments to provide an exchange of information so that necessary protective measures may be implemented. The Operational Phase is the implementation of the Protective Actions and Parallel Actions as deemed necessary to minimize public exposure to radiation and ensure health and safety.

5.4.1 Phase 1 - Initiation

A specific preplanned response by State and local governments to each class of accident is necessary to ensure the successful implementation of necessary Protective Actions and Parallel Actions in a timely manner. The following sections summarize State response to Unusual Event, Alert, Site Area Emergency, and General Emergency accident classes or their equivalents in accordance with each FNF's emergency response plan.

5.4.1.1 Unusual Event

Upon declaration of an Unusual Event at CCNPP, the MEMA, MDE and Plume Zone Counties will be notified (see Section 5.4.2.2). MEMA and the plume zone counties will be notified upon declaration of an Unusual Event at PBAPS. The following actions will be initiated at the State and/or County levels:

1. MEMA will notify the Governor, State PIO, and the MDE.
2. Counties will provide fire or security assistance to the FNF as requested.

This emergency status will be maintained until closeout or escalation to a more severe class.

5.4.1.2 Alert

Upon declaration of an Alert class accident: The FNF will promptly notify the Plume Zone Counties, RHP and MEMA. The following actions will be initiated at the State and/or County levels:

1. MEMA will notify the Governor, State PIO (and MDE during off-duty hours).
2. MEMA will notify State agencies, all other Maryland Counties and Baltimore City, Ocean City, FEMA, contiguous states and the District of Columbia.

3. At the option of each Plume Zone County, and as conditions warrant, activate prompt notification system to notify public of emergency status, activate EAS system, and provide periodic information updates.

4. State and Plume Zone Counties' EOCs and the Accident Assessment Center may be partially activated.

7. MEMA may dispatch liaison personnel to plume zone jurisdictions and the EOF if appropriate.

9. Ingestion Zone Counties will partially activate their EOCs upon order of the MEMA.

10. Protective Actions may be implemented pending assessment of information from the FNF and field monitoring teams.

11. The State Joint Information System will be implemented.

12. The Accident Assessment Center will continuously assess information from the FNF and field monitoring teams with regard to changes to Protective Actions already initiated.

13. MEMA will keep FEMA, all contiguous states, the District of Columbia, all Maryland Counties, Baltimore City, and the City of Annapolis informed of the emergency and Protective Actions recommended

This emergency status will be maintained until closeout, reduction of emergency class, or escalation to a more severe class.

5.4.1.3 Site Area Emergency

Upon declaration of a Site Area Emergency: The FNF will promptly notify the Plume Zone Counties, MDE, and MEMA. The following actions will be initiated at the State and/or local levels:

1. MEMA will notify the Governor, State PIO (and MDE during off-duty hours).

2. MEMA will notify State agencies, all other Maryland local jurisdictions, FEMA, contiguous states and the District of Columbia.

3. Activate prompt notification system to notify public of emergency status, activate EAS system, and provide periodic information updates if warranted.

4. State and Plume Zone Counties' EOCs and the Accident Assessment Center will be fully activated.

5. Ingestion Zone Counties' EOCs will be partially activated.

6. Accident Assessment will be in initiated and field monitoring teams dispatched to provide confirmatory radiation monitoring.

7. Agencies will immediately notify their State EOC representatives to immediately report to the State EOC.

8. MEMA will dispatch liaison personnel to Plume Zone Counties' EOCs, contiguous states' EOCs as appropriate, and the FNF's near-site EOF.

9. The Accident Assessment Center will perform plume and ingestion pathway dose projections.

10. The Protective Action of Food, Water, Milk, and Livestock Feed Control may be implemented based on assessment of information from dose projections.

11. Additional Protective Actions and Parallel Actions may be ordered and implemented pending assessment of information from the FNF and field monitoring teams.

12. The State JIS will be implemented.

13. The Accident Assessment Center will continuously assess information from the FNF and field monitoring teams with regard to changes to Protective Actions already initiated.

14. The MEMA will keep FEMA, all contiguous states, the District of Columbia, all Maryland local jurisdictions informed of the emergency and Protective Actions.

    This emergency status will be maintained until closeout, reduction of emergency class, or escalation to General Emergency class.

5.4.1.4 General Emergency

Upon declaration of a General Emergency: The FNF will promptly notify the Plume Zone Counties, MDE, and MEMA. The following actions will be initiated at the State and/or County levels:

1. MEMA will notify the Governor, State PIO (and MDE during off-duty hours).

2. MEMA will notify State agencies, all other Maryland local jurisdictions, FEMA, contiguous states and the District of Columbia.

3. Activate prompt notification system to notify public of emergency status, activate EAS system, and provide periodic information updates.

4. State and Plume Zone Counties' EOCs, the Accident Assessment Center, and Ingestion Zone Counties EOCs will be fully activated.

5. Accident Assessment will be initiated and field monitoring teams dispatched to provide confirmatory radiation monitoring.

6. Agencies will immediately notify their State EOC representatives to immediately report to the State EOC.

7. MEMA will dispatch liaison personnel to Plume Zone Counties' EOCs, contiguous states' EOCs as appropriate, and the FNF's near-site EOF.

8. The Accident Assessment Center will perform plume and ingestion pathway dose projections.

9. Protective and Parallel Action may be implemented pending assessment of information from the FNF and field monitoring teams.

10. The State Public Information Program will be implemented.

11. The Accident Assessment Center will continuously assess information from the FNF and field monitoring teams with regard to changes to Protective Actions already initiated.

12. The MEMA will keep FEMA, all contiguous states, the District of Columbia, all Maryland local jurisdictions informed of the emergency and Protective Actions.

This emergency status will be maintained until closeout or reduction in emergency class.

5.4.2 Phase 2- Operational

This section summarizes the assigned emergency response functions of key and support agencies which will respond to an accident at an FNF. For most emergency functions, State and Federal operations will be in support of County operations. The NRC is the lead Federal Agency (LFA) for an emergency that occurs at a fixed facility or regarding any activity licensed by the NRC or an Agreement State. Table 5-2 summarizes this overall concept of operation. The State agencies and their responsibilities are shown in the State Agency Responsibility Matrix, Table 5-3. Function flow diagrams which graphically show the interaction of these agencies are presented in Figures 5-1 through 5-6. The Operational Phase consists of Accident Assessment, Notification and Communication, Command and Coordination, Protective Actions, Parallel Actions, and Public Information.

5.4.2.1 Accident Assessment

Initial assessment of the accident and evaluation of the radiological release will be performed by the FNF. The MDE, along with its support agencies, will perform an independent assessment of the accident.

Evaluation

The MDE Radiological Emergency Response Team will perform calculations independent of the FNF in consultation with the DNR/PPRP regarding in-plant conditions and reactor status. The decision to implement Protective Action(s) includes considering risks if the action is not taken and an analysis of the benefits of taking the action versus the risk and constraints of taking the action. The weather, time of day, road capacities, and evacuation time estimates must all be considered when determining the most beneficial Protective Action. Based upon the FNF's recommendations and their independent analysis of the data, the AAC will recommend the necessary Protective Actions to the Secretary of the Environment. The Secretary of the Environment (MDE) will, whenever possible, confer with the State and County EOCs and the FNF prior to directing the necessary Protective Actions. For protective actions in the ingestion pathway, the Secretary, MDE will contact DHMH, MDE, and DNR representatives. For FNFs located in contiguous states, MEMA will confer with that state's Emergency Management Agency.

Field Monitoring and Sample Collection

1. **Department of the Environment**

   The MDE will provide direction of field monitoring and sample collection teams.

2. **Department of Health and Mental Hygiene**

   The DHMH will provide personnel to MDE field monitoring and sample collection teams for the ingestion pathway.

3. **Maryland Department of Agriculture**

   The Maryland Department of Agriculture will provide personnel to MDE or DHMH for assistance in the collection of milk, pasture grass, and animal feed samples in the ingestion pathway.

4. **Department of Natural Resources**

   The Natural Resources Police will support overwater field monitoring, if necessary, and provide transportation over waterways for other field monitoring and sample collection teams.

   Fisheries Service will provide personnel and equipment for the collection of the shellfish and fin fish samples.

5. **Maryland State Police**

   The Maryland State Police will provide land and/or air transportation within Maryland for MDE field monitoring teams and equipment. The Maryland State Police will provide communications for field monitoring teams, if necessary, under the direction of the County Radiological Officer or Maryland Emergency Management Agency.

6. **Department of Transportation**

The State Highway Administration will provide communications and transportation support for field monitoring teams.

7. **Maryland Military Department/National Guard**

The Maryland Military Department/National Guard will provide transportation for field monitoring and sample collection teams. The Maryland Military Department/National guard will also provide sampling at military installations.

8. **State Fire Marshal**

The State Fire Marshal will provide trained personnel and equipment to assist in field monitoring.

9. **County Agencies**

Each CCNPP Plume Zone County will provide trained personnel, equipment, and transportation to assist in field monitoring and sample collection. Each Ingestion Zone County will provide personnel, equipment, and transportation to assist in sample collection. Each PBAPS Plume Zone County will provide transportation to support State field monitoring and sample collection teams.

10. **Federal Agencies**

DOE has the initial responsibility for coordinating the offsite Federal radiological monitoring and assessment assistance during the response to a radiological emergency. In a prolonged response, EPA will assume the responsibility for coordinating the assistance at some mutually agreeable time, usually after the emergency phase.

Some of the participating Federal agencies may have radiological planning and emergency responsibilities as part of their statutory authority, as well as established working relationships with State counterpart agencies. The monitoring and assessment activity, coordinated by DOE, does not alter those responsibilities but compliments them by providing for coordination of the initial Federal radiological monitoring and assessment response activity.

Activities will:

1. Support the monitoring and assessment programs of the States,
2. Respond to the assessment needs of the LFA, and
3. Meet statutory responsibilities of participating Federal agencies.

Federal offsite monitoring and assessment activities will be coordinated with those of the State. Federal agency plans and procedures for implementing this monitoring and assessment activity are designed to be compatible with the radiological emergency planning requirements for State, local governments, specific facilities, and existing memoranda of understanding and interagency agreements.

DOE may respond to a State or LFA request for assistance by dispatching a Radiological Assistance Program (RAP) team. If the situation requires more assistance than a RAP team can provide, DOE will alert or activate additional resources. These resources may include the establishment of a Federal Radiological Monitoring and Assessment Center (FRMAC) to be used as an on scene coordination center for Federal radiological assessment activities. Federal and State agencies are encouraged to collocate their radiological assessment activities.

Federal radiological monitoring and assessment activities will be activated as a component of an FRERP response or pursuant to a direct request from State or local governments, other Federal agencies, licensees for radiological materials, industries, or the general public after evaluating the magnitude of the problem and coordinating with the State(s) involved.

Doe and other participating Federal agencies may learn of an emergency when they are alerted to a possible problem or receive a request for a radiological assistance. DOE will maintain national and regional coordination offices as points of access to Federal radiological emergency assistance. Requests for Federal radiological monitoring and assessment assistance will generally be directed the appropriate DOE radiological assistance Regional Coordinating Office. Requests also can go directly to DOE's Emergency Operations Center (EOC) in Washington, D.C. When other agencies receive requests for Federal radiological monitoring and assessment assistance, they will promptly notify the DOE EOC.

Sample Analysis

The AAC will coordinate, and the DHMH and DNR will perform the laboratory analysis of samples. FRMAP/RAP will also provide laboratory analysis to the extent of its capabilities in coordination with the DHMH. Gross analysis of air samples may be performed by DHMH and FRMAP/RAP field teams.

The MDE, along with support agencies, will continue to monitor the accident. The MDE will update the Plume Zone Counties and the MEMA on the accident status and the MEMA, in turn, will keep the Ingestion Zone Counties informed.

During ingestion activities MEMA will update all affected counties. Figure 5-2 graphically represents the interaction of these agencies in assessing the accident.

5.4.2.2 Notification and Communication

Notification by the FNF

Calvert Cliffs Nuclear Power Plant (CCNPP) and Peach Bottom Atomic Power Station (PBAPS)

The FNF will notify the Plume Zone Counties Communications Centers/Central Alarms, the MEMA, and the MDE/RHP (during its normal working hours) for all emergency classes.

Other FNFs in Contiguous States

The FNF will notify the contiguous states Emergency Management Officers which will notify the MEMA for all emergency classes.

Notification by the MEMA

MEMA will ensure the notification to the Radiological Health Program Office, the Governor and State PIO. State agencies will be notified in order of the support they provide to the MDE. The MEMA will then notify all Maryland local jurisdictions, the District of Columbia, all contiguous states and FEMA.

Notification by State Agencies

Upon receipt of notification from the MEMA which requires an agency response, that agency will implement its notification procedures in accordance with its Standard Operating Procedures.

Notification by all Maryland Counties and Baltimore City

Upon receipt of notification from the FNF or the MEMA which requires County response, the county EOC will implement its notification procedures. County agencies and those State agencies having emergency response functions in the County's REP will be notified.

Notification by County Agencies

Upon receipt of notification from the County EOC which requires an agency response, that agency will implement its notification fan-out in accordance with its Standard Operating Procedures.

Communications

The most rapid and expeditious means of communications available at any given time will be utilized for the dissemination of the notification and emergency messages. Table 5-1 identified the primary and alternate methods of communications between emergency facilities. Figure 5-3 represents the initial notification sequence.

5.4.2.3 Command and Coordination

The FNF Emergency Director will establish liaison and coordinate the Site Area Emergency response with the off-Site Area Emergency response in accordance with the FNF's Emergency Response Plan and the State of Maryland REP.

The Governor is in overall command of the State agencies, State resources, and the State's emergency response. The Governor has the authority to direct whatever Protective Actions are necessary to protect public health and safety.

The Secretary of the Environment, also by law, has the authority to direct whatever Protective Actions are necessary to protect public health and safety for radiological emergencies.

The head of county government may direct and/or take additional protective actions necessary to protect Public health and safety.

The MEMA Director will provide overall coordination of State, private, and Federal emergency response agencies' support of the emergency operations of the affected county. The Director will coordinate requests for assistance from the affected county and direct the requests to the appropriate State, private, and Federal agencies.

The head of the County government is in overall command of county agencies, county resources, and the county emergency response.

The EM Director of each County will provide overall coordination of County and private emergency operations. In addition, the EM Director of each County will provide overall coordination of State and Federal emergency operations within the County as outlined in each County's REP.

State agencies that have been assigned emergency functions in the State REP will provide a representative who will report to the State EOC. Each agency represented at the State EOC will ensure that sufficient staff is made available for 24-hour per day coverage for the duration of the emergency. Agency representatives will have the authority, unless provided for otherwise by State law, to commit the resources of the agency represented and will have authority to speak on behalf of the head of the organization in the event of an extreme emergency. It is the responsibility of the State agencies to notify their State EOC representatives of an accident classification and to instruct them to report to the State EOC upon declaration of an Alert, Site Area Emergency or General Emergency declaration.

Each state organization which has a key or support function in the REP will ensure that adequate personnel are available for the 24-hour per day operation of its headquarters for the duration of the emergency.

The MEMA, MDE and DNR/PPRP will provide representatives to the FNF's near-Site Area Emergency Operations Facility upon its activation.

Figure 5-4 represents the Command and Coordination function of State Emergency Response Operations.

5.4.2.4 Protective Actions

MEMA, based upon the recommendations or directives of the Secretary of the Environment or Governor, will inform the affected Counties and assure overall coordination for State support to the County in the implementation of their Protective Actions operation. Figure 5-5 represents the organization of State support to County for Protective Actions. Each Protective Action is summarized below.

Potassium Iodide

MEMA will assure overall coordination of State support to aid County operations in notifying the affected population to ingest stable iodine.

Notification of the Public

Each Plume Zone County will cause its prompt notification to the public (siren) system to be activated. EAS radio stations will be activated and instructed as to which prepared message to use. Detailed messages with specific instructions to the public will be provided to the EAS stations by State and County PIOs on a timely basis. The Maryland State Police will assist county operations by providing cruisers with public address systems and personnel to assure public notification. The Forest and Park Services will notify campers and visitors in State forests, parks, and other State recreational areas. The Natural Resources Police will assist in notifying boaters on affected waterways.

Take Shelter

MEMA will assure overall coordination of State support to aid County operations in notifying the affected population to seek shelter.

Notification of the Public

Each Plume Zone County will cause its prompt notification to the public (siren) system to be activated. EAS radio stations will be activated and instructed as to which prepared message to use. Detailed messages with specific instructions to the public will be provided to the EAS stations by State and County PIOs on a timely basis. The Maryland State Police will assist county operations by providing cruisers with public address systems and personnel to assure public notification. The Forest and Park Services will notify campers and visitors in State forests, parks, and other State recreational areas. The Natural Resources Police will assist in notifying boaters on affected waterways.

Evacuation

MEMA will assure overall coordination of State support to aid County operations in notifying the affected public to evacuate and provide transportation assistance.

Notification of the Public

Each Plume Zone County will cause its prompt notification to the public (siren) system to be activated. EAS radio stations will be activated and instructed as to which prepared message to use. Detailed messages with specific instructions to the public will be provided to the EAS stations by State and County PIOs on a timely basis. The Maryland State Police will assist county operations by providing cruisers with Public Address systems and personnel to assure public notification. The Forest and Park Services will notify campers and visitors in State Forests, parks, and other state recreational facilities. The Natural Resources Police will assist in notifying boaters on affected waterways.

Transportation of Evacuees

The Department of Transportation's Mass Transit Administration and the Maryland Military Department/National Guard will assist in transportation of evacuees from reception centers to evacuation centers. The Natural Resources Police will assist in providing water transportation for special areas which must be evacuated.

Impediments to Evacuation

Circumstances may dictate the need for extraordinary speed in the removal of impediments to evacuation. For this reason, Plume Zone Counties will, if practicable, pre-position personnel, equipment, and materials along evacuation routes and at traditional congestion areas. Extraordinary measures may be necessary in order to permit the uninterrupted flow of evacuation traffic. The removal of any impediments will be handled at the County level by those agencies normally responsible for their removal.

Mass Care Centers

Mass Care Centers/Temporary Housing Facilities will be activated within the Plume Zone Counties and their evacuation support counties (see Table 3-12). The location and capacities of these centers are provided in the County REP Plans.

Access Control

MEMA will assure overall coordination of State support to aid County operations in controlling access into the affected area and exiting traffic.

The Maryland State Police and the Maryland Military Department/ National Guard will assist the County by providing personnel to man access and traffic control points. The Natural Resources Police will restrict access of water craft along waterways. The U.S. Coast Guard will restrict maritime vessels if necessary. The Department of Transportation's State Highway Administration will provide road barricades, flashing signals, and traffic cones to supplement County resources.

The State Highway Administration will also print signs identifying specific evacuation routes and other signs as requested.

Food, Water, Milk, and Livestock Feed Control

MEMA will assure overall coordination of State support to aid County operations in controlling food, water, milk, and livestock feed supplies which may have become contaminated.

Analysis

The MDE will determine whether these supplies are suitable for animal and human consumption with regards to possible radioactive contamination. Once it has been determined that a supply is contaminated above acceptable limits, the DHMH will coordinate with support agencies to ensure that these products are removed or restricted from the public market until it has been determined that they are again safe for consumption.

Control

The DHMH and DNR will ensure that contaminated milk supplies and contaminated food supplies including produce, and aquatic and game animals are kept from the public. The DHMH will also ensure that public water supplies which have become contaminated are shut off or are designated for critical use (e.g., fire fighting) only. The Department of Agriculture will ensure that animals are removed from pasture and are placed on alternate feed supplies. The Department of Transportation will provide transportation for alternate feed supplies for livestock taken off pasture. The Tidal Fisheries Division will control harvesting of contaminated shellfish. The Maryland Military Department/National guard will notify military installations of the need to control contaminated commodities.

5.4.2.5 Parallel Actions

MEMA will coordinate with the affected County to provide State assistance in the implementation of Parallel Actions operations. Figure 5-6 represents the organization of State support to the County for Parallel Actions. Each Parallel Action is summarized below.

Emergency Medical Services

MEMA will assure overall coordination of State support to aid County operations in emergency medical services. The Maryland Institute for Emergency Medical Services Systems (MIEMSS) is the key State agency and will coordinate State support agencies in providing assistance as requested. MIEMSS will also coordinate assignments of private agencies under support agreements.

Transportation

The Natural Resources Police and Maryland State Police will provide emergency transportation for the injured.

Treatment

The Maryland Military Department/National Guard will provide emergency first aid personnel. The American Red Cross will also provide emergency first aid at the evacuation centers. Attachment 9-5 identifies hospitals capable of receiving radioactively contaminated patients for which letters of agreement currently exist.

Radiation Exposure Control

Radiation Exposure Control for State emergency workers is primarily the responsibility of the MDE. Radiation Exposure Control for County emergency workers is primarily the responsibility of County emergency management agency.

MEMA will assure overall coordination of State support to radiation exposure control operations. The Department of the Environment (MDE), as the key State agency, will coordinate State and Federal agencies in providing assistance to County radiation exposure control operations .

MEMA will ensure that County Civil Defense/Emergency Management Agencies (CD) from non-affected Counties provide radiation monitoring equipment and other support to the affected County CD, as necessary.

Personnel Exposure Control

Unless provided for by the parent organization, State level emergency workers must contact the nearest Plume Zone County EOC in order to determine the location of dosimetry distribution points. All emergency workers must obtain dosimeters and monitoring equipment prior to entering controlled areas. Potassium iodide (KI) will be administered in accordance with MDE policy and County Health procedures. They must also be briefed on the accident status area recommended stay times in the controlled areas.

Personnel Monitoring

The Department of Transportation may assist in the monitoring of emergency worker exposure. The State Fire Marshal's Office will also support in the monitoring of emergency worker exposure. County Health Departments will submit records of public and emergency worker exposure to the MDE when complete.

Decontamination

The Maryland Military Department/National Guard may assist in decontamination of evacuee, emergency workers, equipment, and materials.

Law Enforcement and Crime Prevention

The Maryland State Police is the key State agency and will coordinate the State support agencies to provide assistance as requested. The Natural Resources police, the Maryland Military Department/National Guard,- and the Alcohol and Tobacco Tax Assessment Officers of the office of the Comptroller of the Treasury will provide support as requested.

Mass Care

MEMA will assure overall coordination of State support of County mass care operations. The Department of Human Resources is the key State agency and will coordinate the operations of the State agencies in providing mass care support to the County.

Evacuation Centers

The State Departments of Agriculture and Education will provide food supplies for evacuation centers with transportation assistance from the State Highway Administration. The Department of Human Resources will identify housing and mobile homes that would be available if evacuation is required for an extended period of time. The American Red Cross and the Salvation Army will also support operations at the evacuation centers by providing registration, food, clothing, bedding, and other standard assistance if necessary.

Funding

The Office of Comptroller of the Treasury will, upon official written request from MEMA or at the direction of the Governor, allocate funds to State agencies so mass care functions and the Parallel Actions are adequately provided for.

Reentry

Refers to the temporary entry of a person into a restricted zone (evacuated area) under controlled conditions.

Return

The Secretary of the Environment will notify the Plume Zone County Health Officers and MEMA when radiation levels are such that it is safe to return to the affected area. MEMA will notify the Plume Zone County CD Directors and coordinate with County and State agencies to provide support to ensure a safe and orderly return of the evacuees.

Notification of the Public

State and County PlOs will coordinate press releases instructing the public that it is safe to return to the affected area and of any special procedures or instructions to be followed. The Forest and Park Services will notify evacuees utilizing State recreation facilities that it is safe to return to the affected areas.

Traffic Control

The Maryland State Police will assist County law enforcement agencies in traffic control.

Transportation of Evacuees

The Mass Transit Administration will provide transportation assistance as requested.

Relocation

The Secretary of the Environment based on assessment by the AAC will notify the Plume Zone County Health officers and MEMA when radiation levels are such that the public or households must be moved from an area where extensive deposition of radioactive materials has occurred until decontamination has taken place.

5.4.2.6 Public Information

The State PIO will implement the State JIS so as to inform the public of a radiological accident. The State PIO will keep the public and news media informed of the situation and any necessary Protective Actions to be taken. The state PIO will have representation at contiguous states' EOCs as appropriate and at the FNF's Joint Information Center, and will coordinate news releases with all County PIOs. Refer to Table 5-4 for the identification of the State PIO and alternate.

TABLE 5-1
EMERGENCY FACILITY COMMUNICATIONS
PRIMARY/ALTERNATE CONTACT AND METHOD OF COMMUNICATION

Facility/Contact	State EOC	AAC	County EOC	FNF/Near-Site EOF	Contiguous State EOC
State EOC MEMA 1) Operations Grp. Chf. 2) Assistant Grp. Chief		1) Commercial Telephone 2) Dcc Radio 3) Fax 4) Internet	1) NAWAS 2) MCD Radio 3) Radio Relay[3] 4) Commercial telephone 5) Dedicated telephone 6) FAX 7) Internet	CCNPP 1) Dedicated telephone 2) CEG Radio 3) FAX 4) Internet PBAPS 1) Dedicated telephone 2) Commercial telephone 3) FAX 4) Internet	1) NAWAS 2) Commercial telephone 3) Federal CD[4] Radio 4) Internet
AAC MDE 1) Secretary of Environment 2) Assistant Secretary, TESH	1) Commercial telephone 2) DCC Radio 3) FAX 4) Internet		1) Commercial telephone 2) DCC Radio relay via MCD Radio 3) Dedicated telephone 4) FAX 5) Internet	CCNPP 1) Dedicated telephone 2) CEG Radio 3) FAX 4) Internet PBAPS 1) Dedicated telephone 2) Commercial telephone 3) FAX 4) Internet	1) Commercial telephone 2) NAWAS via State EOC relay 3) Internet
County EOC Civil Defense 1) Direector 2) Alternate Director	1) NAWAS 2) MCD Radio 3) Radio relay 4) Commercial telephone 5) Dedicated telephone 6) FAX 7) Internet	1) Commercial telephone 2) MCD Radio relay via DCC Radio DCC Radio 3) Dedicated telephone 4) FAX 5) Internet		CCNPP 1) Dediacted telephone 2) CEG Radio 3) FAX 4) Internet PBAPS 1) Dedicated telephone 2) FAX 3) Internet	1) Interstate NAWAS via State EOC 2) Internet
FNF/Near-site EOF Site Area Emergency Coordinator	CCNPP 1) Dediacted telephone 2) CEG Radio 3) FAX 4) Internet PBAPS 1) Dedicated telephone 2) FAX 3) Internet	CCNPP 1) Dediacted telephone 2) CEG Radio 3) FAX 4) Internet PBAPS 1) Dedicated telephone 2) FAX 3) Internet			N/A
Contiguous State EOC Civil Defense Director	1) NAWAS 2) Commercial telephone 3) Federal CD[4] Radio 4) Internet	1) Commercial telephone 2) NAWAS via State EOC relay 3) Internet	1) Interstate NAWAS via State EOC 2) Internet	N/A	

1 Refer to appropriate Appendices for site-specific information.

2 The Maryland Civil Defense Radio Network is a radio communications system that unites the State EOC, the AAC, and the Plume Zone counties on a common radio frequency receive, transmit, and teletype capabilities.

3 Relay through other radio networks, such as the Maryland State Police, the Department of Natural Resources, or the State Highway Administration radio systems.

TABLE 5-2
STATE OF MARYLAND CONCEPT OF OPERATIONS

Organization	ACCIDENT ASSESSMENT	Notification and Communication	Command and Coordin-ation	PROTECTIVE ACTIONS					PARALLEL ACTIONS					
				Take Shelter	Thyroid Protec-tion KI	Evacua-tion	Access Control	Food, Water, Milk, Livestock Feed Control	Emergency Medical Services	Radiation Exposure Control Reentry	Law Enforcement And Crime Prevention	Mass Care	Reloca-tion & Return	Public Informa-tion
Governor	CMD	CMD	CMD	CMD	CMD	CMD	CMD	CMD	CMD	CMD	CMD	CMD	CMD	CMD
Maryland Emergency Management Agency	COORD	COORDKEY (STATE LEVEL)	COORD	COORD	COORD	COORD	COORD	COORD	COORD	COORD	COORD	COORD	COORD	COORD
Department of Health and Mental Hygiene	S	S		S	S	S		KEY		S			S	S
Department of the Environment	KEY	S		INIT	INIT	INIT		INIT		KEY			INIT	S
State PIO	S	S		S	S	S	S	S	S	S	S	S	S	
Other Maryland State Agencies	S	S		S	S	S	S	S	S	S	S	S	S	S
Plume Zone Counties	S	KEY (LOCAL LEVEL)	CMD (LOCAL LEVEL)	KEY	KEY	KEY	KEY	S	KEY	KEY	KEY	KEY	KEY	S
Ingestion Zone Counties	S	S				S		S				S	S	S
Fixed Nuclear Facility	INIT	INIT		REC	REC	REC								
Federal Support Agencies	S			S	S	S	S	S	S	S	S	S	S	S
Private and Volunteer Organizations	S	S		S	S	S	S	S	S	S	S	S	S	S

CMD - OVERALL COMMAND OF OPERATIONS AT STATE AND COUNTY LEVELS
COORD - COORDINATION OF STATE AND FEDERAL SUPPORT TO THE COUNTIES
KEY - OVERALL KEY ORGANIZATION FOR STATE AND COUNTY OPERATIONS
S - SUPPORT ORGANIZATION FOR STATE AND COUNTY OPERATIONS
INIT - ORGANIZATION WHICH MAY INITIATE ACTIONS
REC - RECOMMENDATION OF PROTECTIVE ACTIONS BASED ON EPA PAGES
PI - PUBLIC ONFORMATION

TABLE 5-3
STATE OF MARYLAND CONCEPT OF OPERATIONS

Organization	Accident Assessment	Notification and Communication	Command and Coordination	PROTECTIVE ACTIONS					PARALLEL ACTIONS					
				Take Shelter	Thyroid Protection KI	Evacuation	Access Control	Food, Water, Milk, Livestock Feed Control	Emergency Medical Services	Radiation Exposure Control Reentry	Law Enforce-ment And Crime Preven-tion	Mass Care	Relocation & Return	Public Informa-tion
Governor	CMD	CMD	CMD	CMD INIT		CMD INIT	CMD INIT	CMD INIT	CMD	CMD	CMD	CMD	CMD	S
Maryland Emergency Management Agency	COORD	COORD KEY	COORD KEY	COORD KEY		COORD KEY	COORD	COORD	COORD	COORD	COORD	COORD	COORD KEY	S
Department of the Environment	KEY 3A, 3B		S	INIT		INIT		INIT		KEY			INIT	S
Department of Health and Mental Hygiene	3A, 3B		S					KEY		S			S	S
Department of Agriculture	3B							S				S		S
Department of Natural Resources	2A, 2B, 3A, 3B		S	1B, 1C		1B, 1C, 2A	S	S	2A		S		S	S
Maryland State Police	2A, 2B, 3A		S	1A, 1B, 1C		1A, 1B, IC	KEY		2A		KEY		S	S
Department of Human Resrc.												S		S
Department of Transportation	2A, 2B, 3A		S			2A	S	2A		4B, 4C, 6C		2A	2A	S
Department of Education												S		S
Department of Housing and Community Development												S		S
Maryland Military Dept./National Guard	2A, 3B		S			2A	S	S	S	4A, 4B, 4C, 6A,	S			S
Maryland Institute for Emergency Medical Services Systems			S						KEY					S
Office of the Comptroller of Treasury											S	S		S
State PIO	PI	PI	PI	PI		PI	PI	PI	PI	PI	PI	PI	PI	KEY
State Fire Marshal	3A		S							4B				S
American Red Cross									S			KEY		S
Salvation Army												S		S
Federal Radiological Monitoring & Assessment Plan	S									S				S
Federal Emergency Management Agency		S		S		S	S	S			S	S	S	S
U.S. Coast Guard	2A, 2B			S		S	S				S			S

Notes

CMD -Overall Command
COORD -Overall Coordination
PI - Public Information
KEY -Key Agency
S -Supports Key Agency
INIT -Initiating Agency

Support Agency Functions

1A – Initial Public Notification via Radio or TV
1B – Initial Public Notification via Mobile and/ or Fixed Public Address or Alert System
1C – Initial Public Notification via Direct Contact
2A – Provide Transportation
2B – Provide Communications
3A – Field monitoring
3B – Provide Sampling
4A – Monitor Evacuee Exposure
4B – Monitor Emergency Worker Exposure
4C – Monitor Equipment and Material
5 - Keep Records/Submit Report
6A - Decontamination of Evacuee
6B - Decontamination of Emergency Workers
6C - Decontamination of Equipment and Material

TABLE 5-4
STATE OF MARYLAND
FUNCTIONAL RESPONSIBILITY AND KEY INDIVIDUALS LISTING

FUNCTION	IMPLEMENTING KEY AGENCY	RESPONISIBLE INDIVIDUAL	ALTERNATE INDIVIDUAL
Accident Assessment	DEPARTMENT OF THE ENVIRONMENT	SECRETARY	MDE Emergency Response Program
Protective Actions			
Take Shelter	MEMA	Director	Assistant Director for Operations
Evacuation	MEMA	Director	Assistant Director for Operations
KI Thyroid Protection	MEMA	Director	Assistant Director for Operations
Access Control	Maryland State Police	Superintendent	Deputy Superintendent
Food, Water, Milk, and, Livestock Feed Control	Maryland Department of Agriculture	Secretary	Deputy Secretary
Parallel Actions			
Emergency Medical Services	Maryland Institute for Emergency Medical Services Systems	Director	Special Assistant of the Director
Radiation Exposure Control	Department of the Environment	Secretary	MDE Director, Emergency Response
Law Enforcement and Crime Prevention	Maryland State Police	Superintendent	Deputy Superintendent
Mass Care	American Red Cross	Director, Emergency Services	Manager, Emergency Services
Reentry	MEMA	Director	Assistant, Director for Operations
Relocation	MEMA	Director	Assistant, Director for Operations
Return	MEMA	Director	Assistant, Director for Operations
Public Information	MEMA	MEMA PIO	MMD/NG PIO

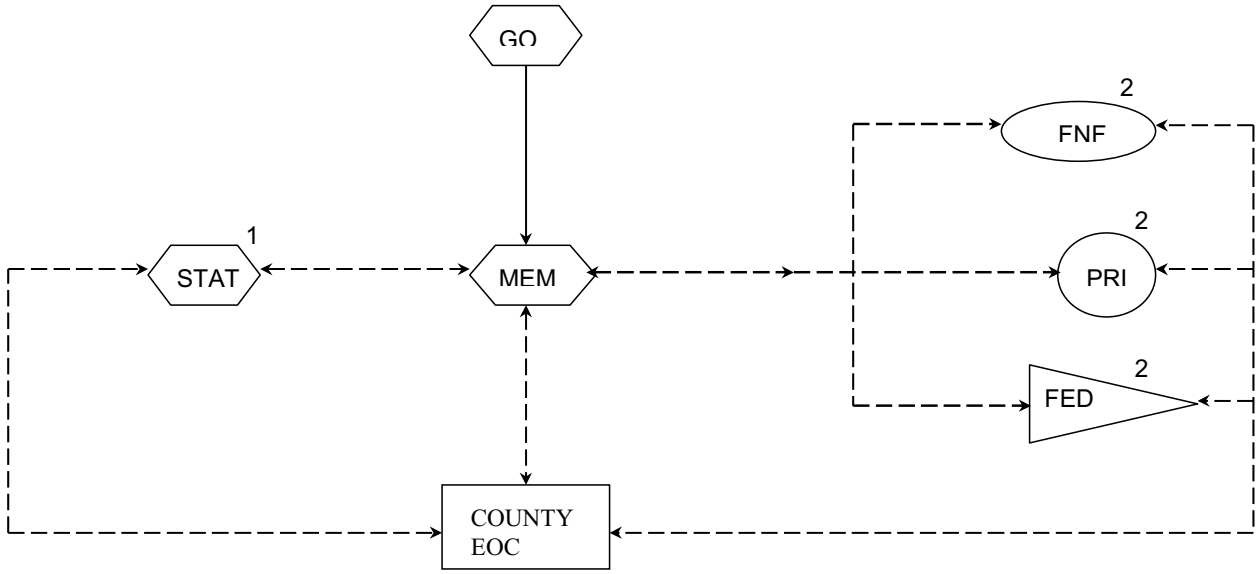

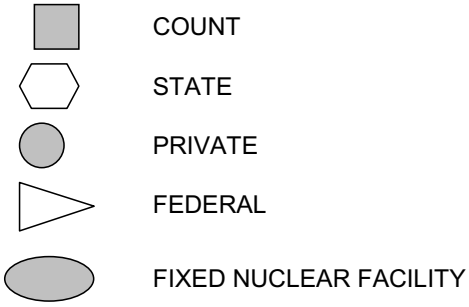

NOTES:

1. DIRECT STATE SUPPORT TO AFFECTED COUNTY(IES) THROUGH STATE AGENCIES HAVING LOCAL REPRESENTATION (E.G. MDE, MSP, SHA, DNR)
2. DIRECT SUPPORT TO AFFECTED COUNTY(IES) THROUGH

FIGURE 5-1

EMERGENCY RESPONSE ORGANIZATION

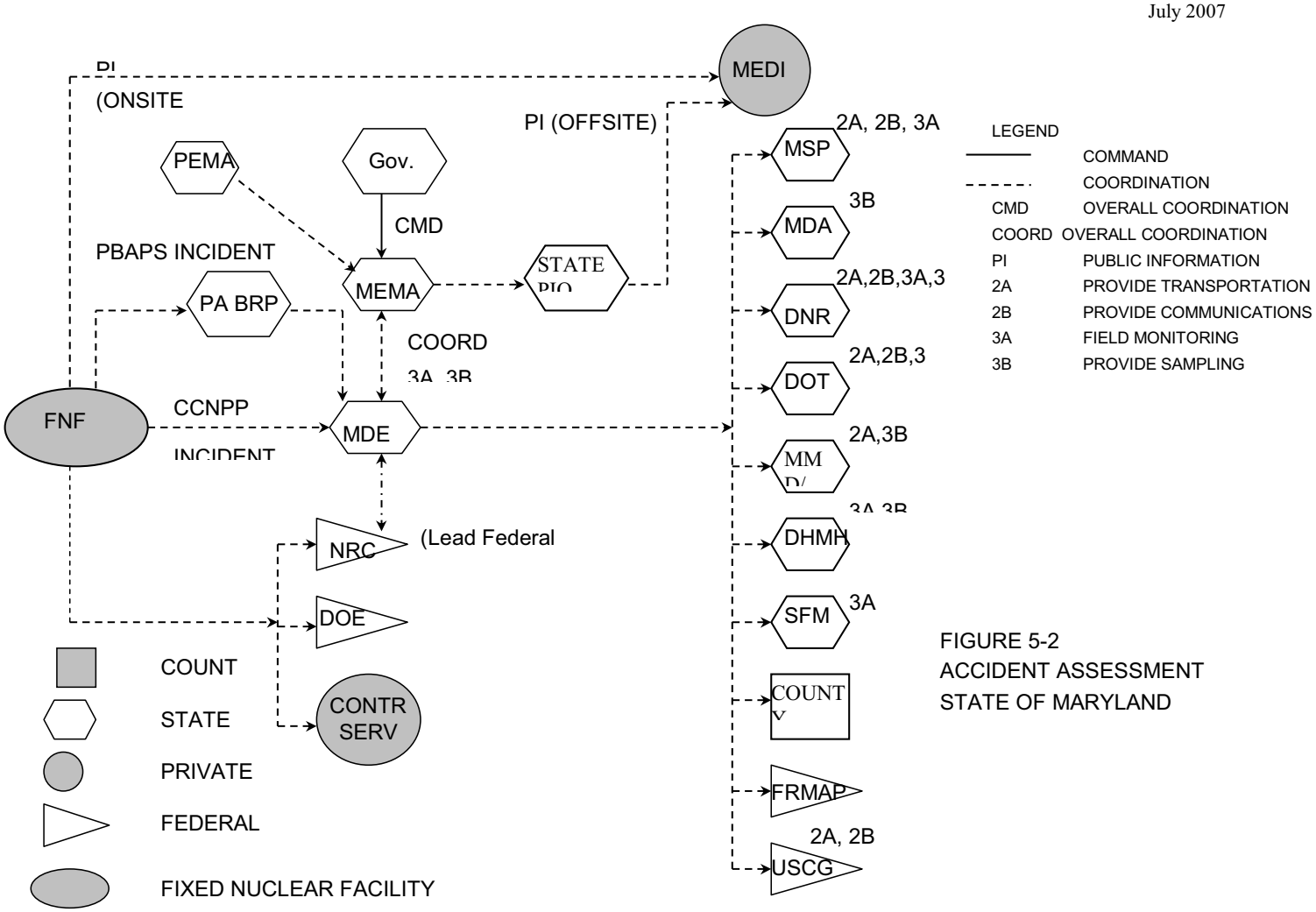

FIGURE 5-2
ACCIDENT ASSESSMENT
STATE OF MARYLAND

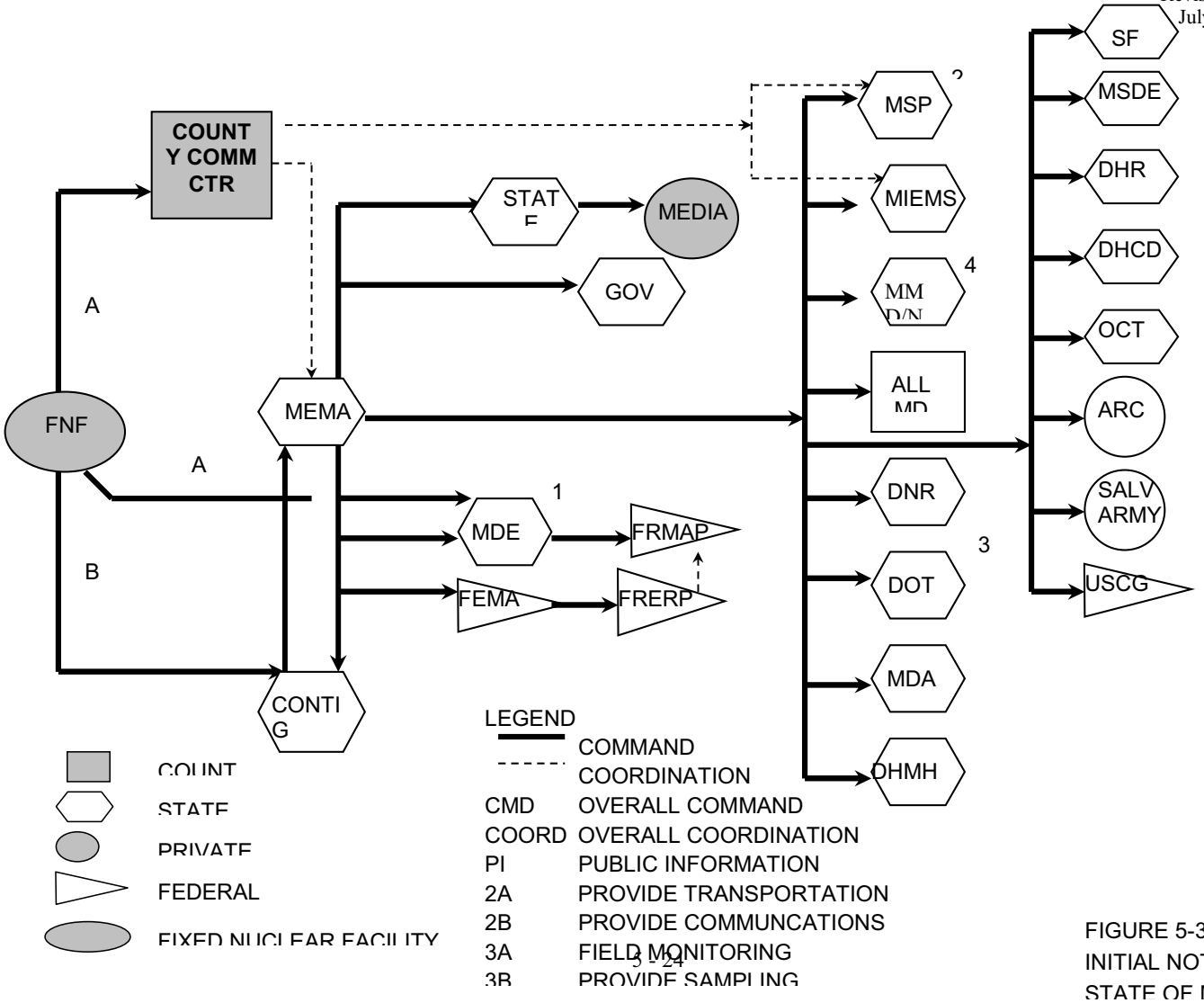

FIGURE 5-3
INITIAL NOTIFICATION
STATE OF MARYLAND

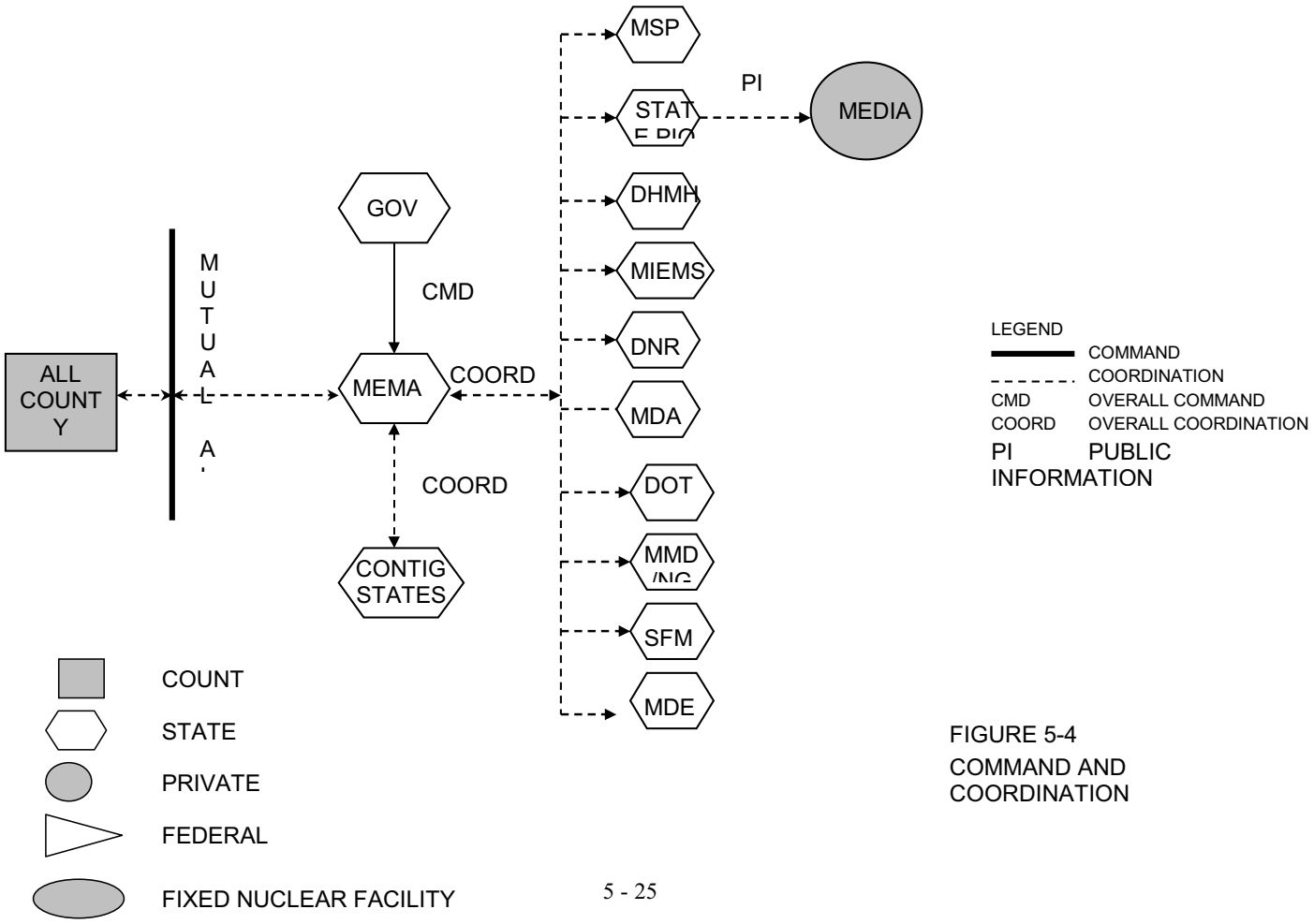

FIGURE 5-4
COMMAND AND
COORDINATION

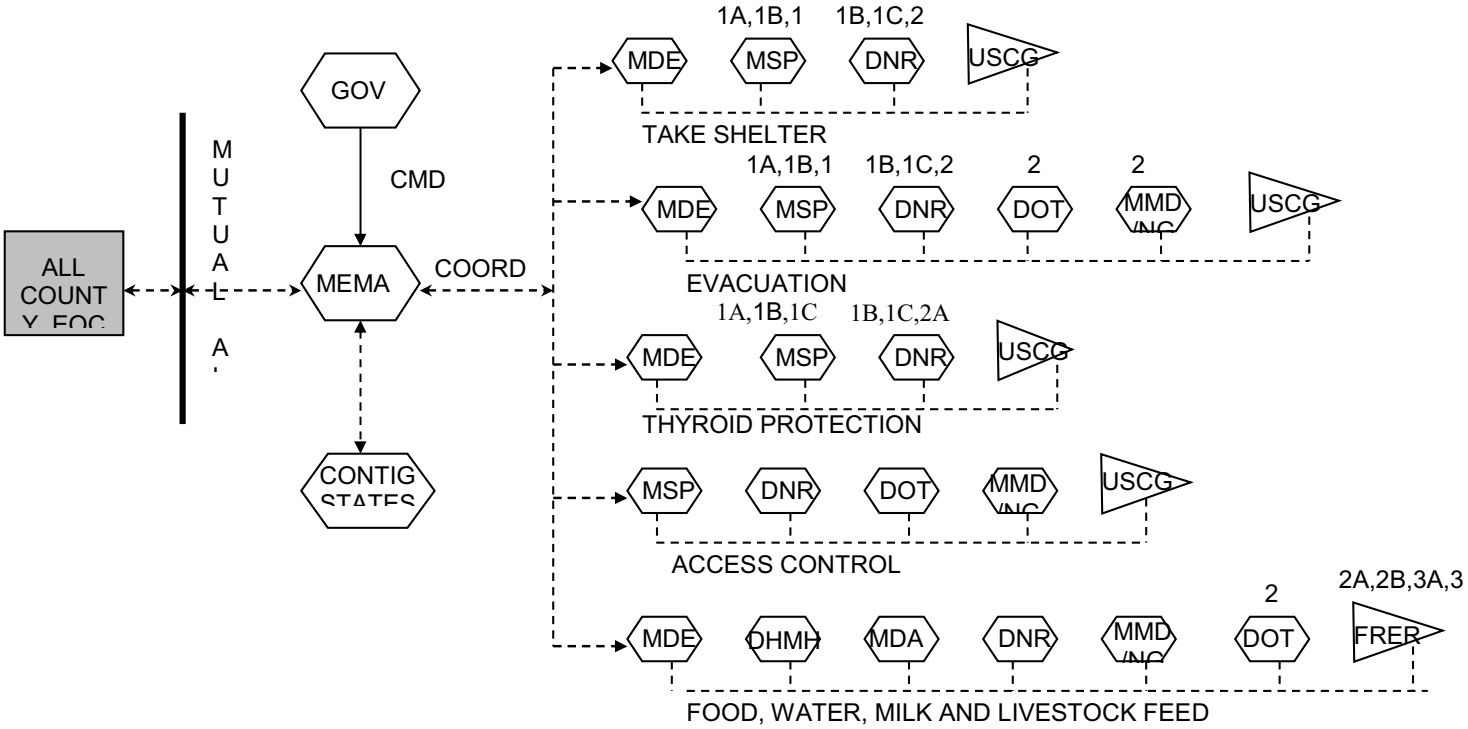

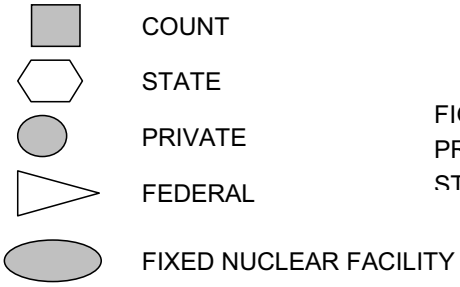

LEGEND

▬▬▬	COMMAND
- - - -	COORDINATION
CMD	OVERALL COMMAND
COORD	OVERALL COORDINATION
PI	PUBLIC INFORMATION
1A	INITIAL PUBLIC NOTIFICATION VIA RADIO
	INITIAL PUBLIC NOTIFICAITON VIA MOBILE AND/OR UBLIC ADDRESS OR ALERT SYSTEM
1C	INITIAL PUBLIC NOTIFCATION VIA DIRECT CONTACT
2A	PROVIDE TRANSPORTATION
2B	PROVIDE COMMUNICATION
3A	FIELD MONITORING
3B	PROVIDE SAMPLING

FIGURE 5-5
PROTECTIVE ACTIONS
STATE OF MARYLAND

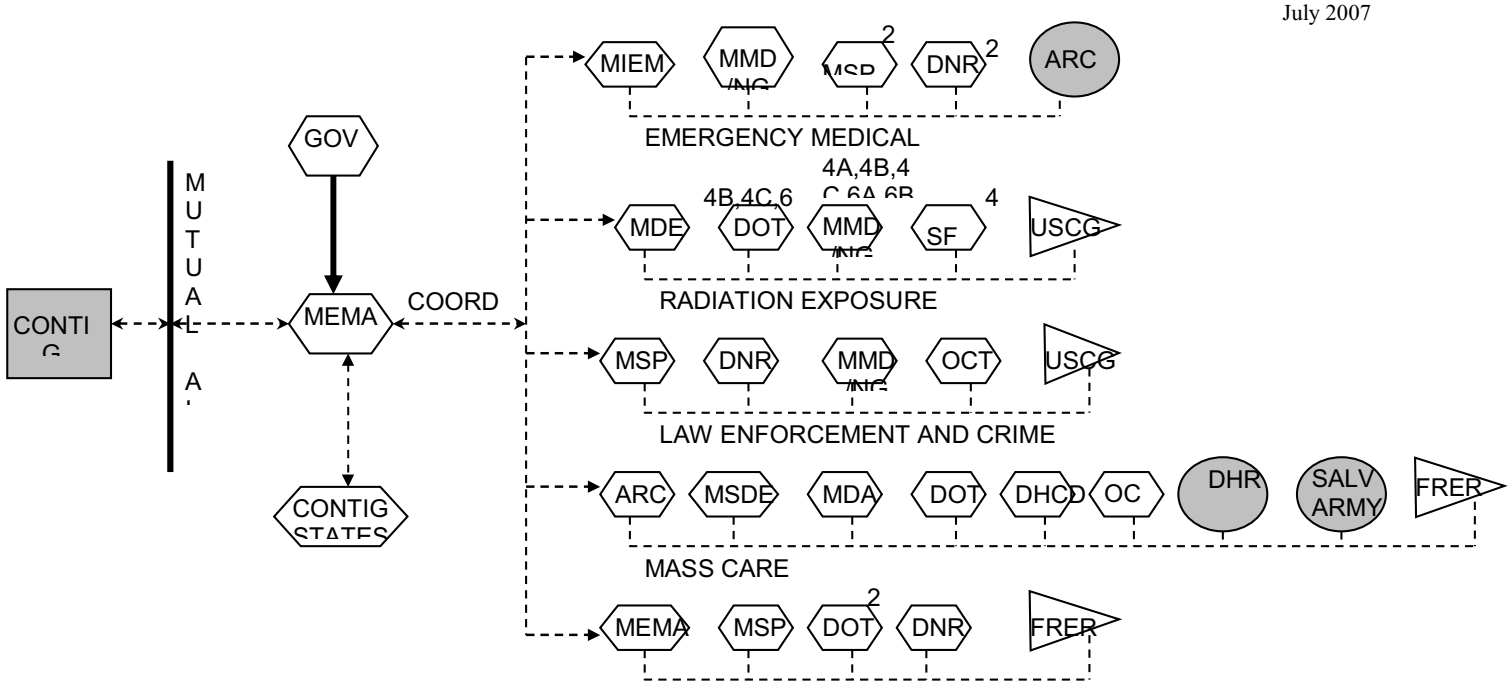

LEGEND

━━━	COMMAND
- - - -	COORDINATION
CMD	OVERALL COMMAND
COORD	OVERALL COORDINATION
PI	PUBLIC INFORMATION
1A	INITIAL PUBLIC NOTIFICATION VIA RADIO
2A	PROVIDE TRANSPORTATION
4A	MONITOR EVACUEE EXPOSURE
4B	MONITOR EMERGENCY WORKER EXPOSURE
5	KEEP RECORDS/SUMMIT REPORTS
6A	DECONTAMINATION OF EVACUEE
6B	DECON. OF EMERGENCY WORKER
6C	DECON OF EQUIP. AND MATERIAL

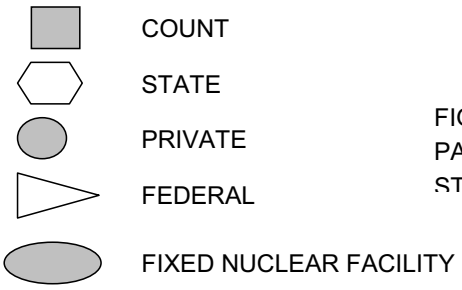

FIGURE 5-6
PARALLEL ACTION
STATE OF MARYLAND

SECTION 6

PLAN TESTING AND MAINTENANCE

6.1 SCENARIOS

MEMA is responsible for the overall development of drill and exercise scenarios and in making arrangements for official evaluators. These scenarios will include the basic objectives for each drill or exercise and appropriate evaluation criteria, the date(s), time period, place(s) and participating agencies, the simulated events, and the time schedule of real and simulated initiating events.

A narrative summary describing the conduct of the exercises or drills will include such things as simulated casualties, off-site fire department assistance, rescue of personnel, use of protective clothing, deployment of radiological monitoring teams, and public information activities. A description of the arrangements for and advance materials to be provided to official observers shall also be provided.

6.2 DRILLS

Drills are often major components of emergency response exercises. They test, develop and maintain skills necessary to perform a particular function as well as augment standard maintenance checks of emergency equipment. All drills, as listed below, will be directed by MEMA and evaluated by qualified officials. Evaluation criteria for drills is addressed in the FEMA Exercise Evaluation Methodology.

6.2.1 Communication Drills

Overall coordination of communication drills is the responsibility of the MEMA Director. Both primary and alternate methods of communications will be tested. Communication drills shall also include the aspect of understanding the content of the message.

Communications between the FNF and State and County agencies within the Plume Exposure Zone will be tested monthly. Communications with Federal emergency response agencies and States within the ingestion pathway shall be tested quarterly. Communications between the FNF, the State and the County EOCs, and field assessment teams will be tested annually.

6.2.2 Medical Emergency Drills

MEMA in conjunction with a plume zone jurisdiction will conduct bi-annual medical emergency drills to satisfy FEMA Guidance Memorandum MS-1 and FEMA- Exercise Evaluation. Radiological medical emergency drills will involve, as a minimum, a simulated contaminated individual, participation from an ambulance service, and the designated off-site medical treatment facility. This medical drill may be performed as part of the required biennial exercise. A medical drill will be conducted to demonstrate medical support procedures for both CCNPP and PBAPS bi-annually. The Maryland Institute for Emergency Medical Services Systems may assist in the conduct of the bi-annual medical emergency drill.

6.2.3 Radiological Monitoring Drills

MEMA and appropriate Counties will assist the Department of the Environment (MDE) in the development, conduct, and analysis of radiological monitoring drills.

State and County organizations having Accident Assessment responsibilities will participate fully in the drills. Off-site radiological field monitoring drills will be conducted concurrent with biennial exercises. These drills shall include collection and analysis of various sample media (e.g., water, grass, soil, and air) and simulated direct radiation measurements in the environment. Provisions for communications and record keeping will be an intrinsic part of each drill.

6.2.4 Accident Assessment Drills

The MDE is responsible for conducting semi-annual accident assessment table top drills. These drills involve analysis of and response to simulated elevated radiation levels in airborne and liquid sample media and to direct radiation measurements in the environment.

6.3 EXERCISES

At least once every two years, MEMA will coordinate the preparation and conduct an emergency response exercise of the REP. Exercises shall be conducted as set forth in NRC and FEMA rules. The exercise shall simulate an emergency which results in off-site radiological releases which would require the response of off-site authorities. The exercise will include the mobilization of adequate personnel and resources of the FNF in question, as well as of the State and Counties, to demonstrate the ability to respond to an incident as called for in the REP. All EOCs involved in the exercise will be manned commensurate with the accident classification. Evaluation criteria for exercises are addressed in the agreed upon extent of play.

The scenario will vary for each exercise so that all major elements of the Plan and all preparedness organizations are tested within a six-year period. Exercises will be conducted under various weather conditions during different seasons of the year.

6.4 TRAINING

6.4.1 Emergency Worker Training

A training program will be established which will be directed at State and County government agencies to prepare them for dealing with radiological emergencies at an FNF. Details of the training program are addressed in the MEMA Administrative SOP, Part I.

Appropriate individuals involved in the emergency response planning efforts and those who may be called to assist in an emergency will be provided training. Where mutual aid agreements exist between local agencies such as fire, police, and ambulance/rescue, the training will also be offered to the other departments which are members of the mutual aid districts).

The Training Program will instruct and qualify personnel responsible for emergency response, overall command and coordination, accident radiological monitoring, radiological analysis, police and fire fighting operations, first aid, medical and rescue operations, and transmission of emergency information and instructions.

County training will be the responsibility of each County Civil Defense/Emergency Management Agency. Overall coordination of State training is the responsibility of MEMA. MEMA will also

conduct appropriate training for State agency EOC representatives. Provisions for periodic retraining (at least once annually) will be central to the training program.

6.4.2 Public Information Training

The State and Counties will coordinate efforts with the FNF in the development of a public information training program. The program will provide information prepared jointly by the State of Maryland and the FNF, and promulgated by the State, to the permanent and transient population in the FNF plume exposure pathway Emergency Planning Zone (EPZ). This program will assure that accurate and timely information is provided to the public in the event of a radiological emergency. The information tells how the emergency plan provides for public notification and how they can expect to be advised of possible Protective Actions and Parallel Actions to be taken. Procedures to be followed for each special concern (e.g. evacuation of school students) will be provided. This will be accomplished by yearly dissemination of basic emergency planning information and a description of the warning systems to the occupants of the plume exposure pathway EPZ. In addition, similar information is included in the telephone directories normally utilized by occupants within the CCNPP EPZ.

Annual programs to acquaint the news media with radiological emergency response plans and to familiarize the media with points of contact and physical location for the release of public information in the event of a radiological emergency will be coordinated by the State PIO.

6.5 CRITIQUE

Official evaluators from County, State, private and/or Federal agencies will observe and critique the required exercises. Participating State and County agencies will also be required to critique the exercises. A critique meeting to evaluate the ability of organizations to respond as called for in the REP will be conducted within four weeks of the annual exercise. A formal evaluation of the exercise and critiques will be made by MEMA. This formal review will be the basis for improving the REP and State and County response.

6.6 PLAN MAINTENANCE

Overall responsibility for the maintenance and updating of the REP will be the responsibility of the MEMA Director. Table 6-1 identifies by title the individual in each agency assigned the responsibility for the maintenance and updating of their agency's sections of the REP and their respective SOPS. These individuals are also responsible for notifying the MEMA of any changes within their organizations which may require revision to the REP. Telephone numbers and staff assignments will be updated at least quarterly. These updates will be distributed to all organizations that require them. Substantive changes proposed by any State or County organization must be approved by the Governor. Any changes made will be sent to the individual users of the REP, accompanied by a mailback certificate indicating that the changes have been received and posted. Formal changes and revised pages will be dated and marked to show where changes have been made and will be distributed to all plan holders.

6.7 SCHEDULING

A schedule of all training, drills, and exercises will, after coordination with all State agencies, Plume Zone Counties, and other participating counties, be incorporated in the Annual State Program Emphasis and MEMA Annual Letter of Certification for FEMA Region III approval.

The extent of participation in training, drills and exercises will be in direct proportion to the amount of funding available from all levels.

TABLE 6-1
EMERGENCY PLAN MAINTENANCE RESPONSIBILITY

AGENCY	RESPONSIBLE INDIVIDUAL
State	
Governor	MEMA Director
Department of Health and Mental Hygiene	Director Office of Food Protection and Community Health Services
Department of the Environment	Director, Emergency Response
Maryland Department of Agriculture	Assistant Secretary to Animal Health and Consumer Services
Department of Natural Resources	
Natural Resources Police	Superintendent
State Forest Park Service	Protection Superintendent
Power Plant Research Program	Manager of Nuclear Programs
Fisheries Service	Director
Maryland State Police	Chief, MSP Operations Bureau Director
Department of Human Resources	Office of Administration
Department of Transportation	Highway Administration Chief Engineer, Maintenance
Maryland State Department of Education	Administrator
Department of Housing & Community Development	Director, Codes Administration
Maryland Military Department/National Guard	Military Support to Civil Authorities Officer
Maryland Institute for Emergency Medical Services Systems	Director, MIEMSS Programs
Office of the Comptroller of the Treasury	Chief Deputy Comptroller
State Fire Marshal	Assistant Chief Fire Investigator
AGENCY	RESPONSIBLE INDIVIDUAL
Private	
American Red Cross	Director, Emergency Service, Central Maryland Chapter
Salvation Army	Baltimore Divisional Commander
Federal	
U.S. Coast Guard	Commander, Coast Guard Activity, Baltimore

SECTION 7
SUMMARY PROCEDURES

Standard Operating Procedures exist for State, County, private, and Federal agencies with assigned responsibilities in the State's emergency operations. This section summarizes each agency's responsibilities and role according to the six basic planning functions.

State of Maryland agencies summarized are:

Governor
Maryland Emergency Management Agency
Department of Health & Mental Hygiene
Department of the Environment
Maryland Department of Agriculture
Department of Natural Resources
Maryland State Police
Department of Human Resources
Department of Transportation
Maryland State Department of Education
Department of Housing & Community Development
Maryland Military Department/National Guard
Maryland Institute for Emergency Medical Services Systems
Office of the Comptroller of the Treasury
State Fire Marshal

County operations summarized are:

Plume Zone Counties
Ingestion Zone Counties

Private agencies summarized are:

American Red Cross
Salvation Army

Federal agencies summarized are:

Department of Energy
Federal Emergency Management Agency
U.S. Coast Guard

GOVERNOR

7.1 STATE AGENCIES

7.1.1 Governor

7.1.1.1 Accident Assessment

The governor is in overall command of the State of Maryland. In the event of an accident at a FNF affecting the State, the Governor will insure that Accident Assessment is performed by MDE and coordinated with MEMA.

7.1.1.2. Notification and Communication

The Governor or, in the absence of the Governor, the Lieutenant Governor, will be notified of an accident at an FNF affecting the State by telephone from the MEMA Director or alternate. Work and home telephone numbers are provided for 24-hour notification.

Alternate means of notification are by Maryland State Police (MSP) radio from MSP Headquarters directly to the Governor's Executive Protection Division, which will notify the Governor.

Communications between the Governor and the State Emergency Operations Center (EOC) will be by telephone and/or radio.

7.1.1.3 Command and Coordination

The Governor is in overall command of all State emergency response operations.

The Lieutenant Governor has the authority of the Governor in the Governor's absence.

The Governor will oversee all radiological emergency operations coordinated by MEMA with the support of designated key and support agencies. The Governor may implement special emergency procedures such as the activation of the Maryland Military Department/National Guard.

7.1.1.4 Protective Actions

The Governor is in overall command of Protective Actions. The Governor will oversee MEMA and the key and support State agency operations in the implementation of the Protective Actions necessary to ensure public health and safety.

7.1.1.5 Parallel Actions

The Governor is in overall command of Parallel Actions. The Governor will oversee MEMA and the key and support State agency operations in the implementation of the Parallel Actions necessary to ensure public health and safety.

7.1.1.6 Public Information

The Governor, through the Press Secretary, will provide support to and coordinate with the State Public Information Officer in the implementation of the REP Public Information Program.

7.1.2 Maryland Emergency Management Agency (MEMA)

7.1.2.1 Accident Assessment

MEMA is in overall coordination of Accident Assessment in the event of an accident at an FNF affecting the State of Maryland.

7.1.2.2 Notification and Communication

The MEMA Director, will be notified of an accident at an FNF affecting the State. For FNFs located within the State, notification will be to the Maryland Joint Operations Center (MJOC) by means of dedicated telephone or radio, or from the affected County Communications Center/Central Alarm by telephone, radio, or the National Warning System (NAWAS) circuit.

For FNFs located in a contiguous state, notification will be from the contiguous state's Emergency Management organization by NAWAS circuit, telephone, or radio relay. The FNF will notify the Plume Zone Counties.

Following completion of an Accident Report Form, notification will be verified according to Standard Operating Procedures.

After working hours, the MEMA Duty Officer will be notified by pager or telephone by the MJOC. The MEMA Duty Officer and the MSP Duty officer provide 24-hour coverage. The MEMA Assistant Director for Operations, and Director will then be notified by telephone by the MJOC

Following completion of an Accident Report Form and notification verification, the MEMA Assistant Director for Operations, or Director will, with the assistance of the MJOC, immediately accomplish the following:

1. Notify the MDE, Radiological Health Program first.

2. Take the necessary steps to partially or fully activate the SEOC, if required.

3. Inform any uninformed officials (Assistant Director for Operations or Director) of the notification and the steps that have been taken.

4. Inform the Governor.

5. Inform the MEMA PIO.

The MEMA Staff Call List will then be implemented for either partial activation of the EOC. Alternate work and home telephone numbers are provided for 24-hour notification. The MEMA personnel will be notified by telephone or personal contact.

MEMA will notify all local jurisdictions, contiguous states, the District of Columbia, and the Federal Emergency Management Agency.

7.1.2.3 Command and Coordination

The Director, MEMA, will report to the State EOC to brief MEMA personnel and appropriate State agency representatives. The Director or alternate, the Assistant Director for Operations, will assume command in the SEOC and ensure the overall coordination of County, State, private, and Federal agency emergency response operations from the State EOC under the overall command of the Governor. The Director is responsible for assuring the continuity of the necessary MEMA personnel, State EOC representatives, and material resources needed to equip the EOC for continuous (24-hour) operation for a protracted period.

MEMA and appropriate State agency representatives will report to the State EOC. The State EOC will serve as a center for updated information and for the coordination of emergency response operations.

The EOC personnel will evaluate County and State agency requests for assistance and act upon them as deemed necessary. Requests for Federal non-technical support will be made by the Director, MEMA to the Director, FEMA Region III when necessary, unless provided for otherwise by law.

MEMA will maintain telephone and/or radio communication with the FNF's Joint Information Center.

MEMA will also provide a representative to the FNF's near-Site Area Emergency Operations Facility (EOF) upon its activation.

7.1.2.4 Protective Actions

The Director, MEMA is in overall coordination of Protective Actions to ensure the health and safety of the public through access control, and Food, Water, Milk, and Livestock Feed Control.

MEMA is the key State agency for Take Shelter, Thyroid Protection and for Evacuation.

Take Shelter

MEMA, as the key State agency, will assure the coordination of State sheltering operations as recommended or directed by the Secretary of the Environment or Governor.

A listing of support agencies is presented in Table 5-3, Agency Responsibility Matrix.

Evacuation

MEMA as the key State agency, will assure the coordination of State evacuation operations recommended or directed by the Secretary of the Environment or Governor. A listing of support agencies is presented in Table 5-3, Agency Responsibility Matrix.

Potassium Iodide

MEMA as the key agency, will assure the coordination of State recommendation for the general public to ingest potassium iodide as directed by the State or local Health Departments.

Access Control

MEMA will assure overall coordination of the State access control operations as supported by the Maryland State Police (MSP).

Food, Water, Milk, and Livestock Feed Control

MEMA will assure the coordination of State food, water, milk, and livestock feed control operations directed by the Department of Health and Mental Hygiene (DHMH) or the Department of the Environment (MDE).

7.1.2.5. Parallel Actions

The Director, MEMA, is in overall coordination of Parallel Actions to ensure public welfare. MEMA will assure overall coordination of State and private agency parallel actions operations for Emergency Medical Services, for Radiation Exposure Control, for Law Enforcement and Crime Prevention, for Mass Care, and for Reentry.

MEMA is the key State agency for Relocation, Reentry and Return.

Emergency Medical Services

MEMA will assure overall coordination of the emergency medical services operations directed by the Maryland Institute of Emergency Medical Services Systems (MIEMSS).

Radiation Exposure Control

MEMA will assure overall coordination of radiation exposure control operations directed by the MDE.

Law Enforcement and Crime Prevention

MEMA will assure coordination of law enforcement and crime prevention operations directed by the MSP.

Mass Care

MEMA will assure coordination of mass care operations coordinated by the American Red Cross.

Relocation & Return

MEMA, as the key State agency for Relocation & Return, will assure coordination of Relocation & Return operations as recommended or directed by the Secretary of the Environment or Governor. The MEMA will coordinate with the Counties to determine necessary State support and will coordinate State resources to provide and orderly Relocation or Return operations.

A listing of support agencies is presented in Table 5-3, Agency Responsibility Matrix.

7.1.2.6 Public Information

MEMA will assure the coordination of the public information operations implemented by the State PIO. All agency media announcements are to be coordinated between the State PIO and the Director, MEMA prior to their release.

DEPARTMENT OF HEALTH AND MENTAL HYGIENE

7.1.3 Deparment of Health and Mental Hygiene (DHMH)

7.1.3.1 Accident Assessment

The DHMH is a key agency for Thyroid Protection and a support agency for Accident/injury Assessment.

The DHMH is responsible for sampling food, milk, and livestock feed when deemed necessary by the AAC. Analysis of samples will be performed by the DHMH laboratories either at the Preston Street headquarters or in the Mobile Environmental Radiological Monitoring Laboratory (MERL) as required by the AAC.

7.1.3.2 Notification and Communication

In the event of an accident during business hours at a Fixed Nuclear Facility (FNF) affecting the State, then MEMA will notify the Secretary of DHMH, or designated alternate. For off hours coverage, the physician on-call and the Emergency Management Team member on-call will be notified.

After receiving notification, the DHMH will notify those personnel who will provide ingestion pathway sample collections in conjunction with MDE or laboratory analysis. Staff will not report to duty stations, however, until such time as required by the AAC.

The DHMH will notify its State EOC representatives upon declaration of an Alert class accident and instruct them to report to the State EOC upon escalation to or declaration of Site Area Emergency or General Emergency class accidents. Upon declaration of a Site Area Emergency MDE will notify the DHMH representative to the Ingestion Pathway Coordinating Committee to report to the IPCC, located at MDE Headquarters.

Communications with the State EOC will be maintained by telephone, two way pagers, blackberries, or radio. Communications between the AAC and the DHMH will be by public telephone, or by dedicated telephone between the AAC and the DHMH duty person at the EOC.

7.1.3.3 Command and Coordination

The Secretary, DHMH, or alternate, the Deputy Secretary/designee will be in charge of and direct the DHMH emergency response operations.

The DHMH will send representatives to the State EOC to provide liaison between the State EOC and the DHMH. The DHMH personnel involved in sample gathering and laboratory analysis will be under the overall command of MDE.

7.1.3.4 Protective Actions

The DHMH is a support agency for Take Shelter and Evacuation, and for Food, Water, Milk, and Livestock Feed Control. The DHMH, as ESF #8 Health and Medical lead, will provide support guidance, if necessary, to the MDE/AAC for protective action recommendations.

Take Shelter

The DHMH, as a support agency for Take Shelter, will notify the Plume Zone County Health Officers if the Protective Action of Take Shelter is recommended or directed by the Secretary of the Environment based upon assessment by the AAC.

Evacuation

The DHMH, as a support agency for Evacuation, may notify the Plume Zone County Health Officers if the Protective Action of Evacuation is recommended or directed by the Secretary of the Environment based upon assessment by the AAC.

Potassium Iodide

DHMH as the key agency, will assure the implementation of State recommendation for the general public to ingest potassium iodide as directed by the State or local Health Departments.

Food, Water, Milk, and Livestock Feed Control

The DHMH, as ESF #8 Health and Medical lead is a support agency for Food, Water, Milk and Livestock Feed Control, and will ensure that all truck and dairy farms, milk processing centers, and portable water supplies are controlled to prohibit public consumption, as deemed necessary by the MDE. Ingestion Zone Counties Health Officers will be notified of Control Operations within their Counties. MEMA will also be notified. The Maryland Department of Agriculture is responsible for identifying alternate sources of these commodities.

A listing of support agencies is presented in Table 5-3, Agency Responsibility Matrix.

7.1.3.5 Parallel Actions

The DHMH is a support agency for Radiation Exposure Control and for Relocation and Reentry.

Radiation Exposure Control

The DHMH will support the Department of the Environment and the Counties in radiation exposure control operations.

A listing of support agencies is presented in Table 5-3, Agency Responsibility Matrix.

Relocation & Return

The DHMH, as a support agency for Relocation & Return, will notify the Plume Zone County Health Officers when either of the Parallel Action of Relocation & Return are recommended or directed by the Secretary of the Environment based upon assessment by the AAC.

Reentry

The DHMH, as a support agency for Reentry, will notify the Plume Zone County Health Officers when the Parallel Action of Reentry is recommended or directed by the Secretary of the Environment/designee based upon assessment by the AAC.

7.1.3.6 Public Information

The DHMH will provide representatives to the State PIO (JIC) to assist in the implementation of the REP Public Information Program. All departmental media announcements are to be coordinated with the State PIO (JIC) prior to their release.

DEPARTMENT OF THE ENVIRONMENT

7.1.4 Department of the Environment (MDE)

7.1.4.1 Accident Assessment

The MDE is the key State agency for Accident Assessment.

The MDE is responsible for environmental monitoring, sampling, and analysis operations in the event of an accident at a FNF affecting the State of Maryland.

The MDE will coordinate its State, County, private and Federal support agencies in accident assessment operations. The Maryland State Police will be contacted for transportation to the FNF site area. The DHMH and DNR will provide laboratory analysis of field samples.

A listing of support agencies is presented in Table 5-3, Agency Responsibility Matrix.

7.1.4.2 Notification and Communication

In the event of a radiological accident at Calvert Cliffs Nuclear Power Plant (CCNPP) or Peach Bottom Atomic Power Station (PBAPS), the affected site will contact MDE during normal working hours and MEMA during off hours, weekends and holidays.

Upon receipt of notification, MDE's Emergency Response Organization (ERO) will make the necessary notifications of key management personnel within MDE.

Upon the declaration of an Alert class accident MDE ERO leadership will assess the need to staff and activate the Accident Assessment Center (AAC) as warranted. Upon declaration of Site Area Emergency or General Emergency, MDE's ERO will fully staff and activate the AAC.

MDE will contact and request Federal assistance as warranted by the resource needs of the event.

Communications among the Accident Assessment Center, the State EOC and MDE field monitoring teams will be maintained in accordance with MDE Emergency Procedures.

7.1.4.3 Command and Coordination

The Secretary, MDE, or alternate will be in charge of and direct the MDE emergency response operations.

The MDE will send representatives to the State EOC to provide liaison between the State EOC and the MDE. The MDE will also send a representative to the FNF's near-Site Area Emergency Operations Facility upon its activation.

7.1.4.4 Protective Actions

The MDE is initiating agency for Take Shelter, Thyroid Protection, Evacuation, and Food, Water, Milk, and Livestock Feed Control.

Take Shelter

The MDE, as the initiating agency for Take Shelter, will notify MEMA if the Protective Action of Take Shelter is recommended or directed by the Secretary of the Environment based upon assessment by the AAC.

Evacuation

The MDE, as the initiating agency for Evacuation, will notify MEMA if the Protective Action of Evacuation is recommended or directed by the Secretary of the Environment based upon assessment by the AAC.

Potassium Iodide

MDE as the key agency, will assure the coordination of State recommendation for the general public to ingest potassium iodide as directed by the State or local Health Departments.

Food, Water, Milk, and Livestock Feed Control

The MDE, as the initiating agency for Food, Water, Milk and Livestock Feed Control, will notify MEMA and the DHMH, DNR, and MDA if the Protective Action of Food, Water, Milk and Livestock Feed Control is recommended or directed by the Secretary of the Environment based upon assessment by the AAC/IPCC.

A listing of support agencies is presented in Table 5-3, Agency Responsibility Matrix.

7.1.4.5 Parallel Actions

The MDE is the key State agency for Radiation Exposure Control and the initiating agency for Relocation and Reentry.

Radiation Exposure Control

The MDE will coordinate State and Federal assistance to the Counties in support of county radiation exposure control operations. After the conclusion of the accident, the MDE will compile and maintain emergency worker and population exposure records and prepare reports on total radiation exposure of emergency workers.

A listing of support agencies is presented in Table 5-3, Agency Responsibility Matrix.

Relocation & Return

The MDE, as the initiating agency for Relocation & Return, will notify MEMA when the Parallel Action of Relocation & Return is recommended or directed by the Secretary of the Environment based upon assessment by the AAC.

Reentry

The MDE, as the initiating agency for Reentry, will notify MEMA when the Parallel Action of Reentry is recommended or directed by the Secretary of the Environment based upon assessment by the AAC.

7.1.4.6 Public Information

The MDE will provide representatives to the State PIO to assist in the implementation of the REP Public Information Program. All departmental media announcements are to be coordinated with the State PIO prior to their release.

MARYLAND DEPARTMENT OF AGRICULTURE

7.1.5 Maryland Department of Agriculture (MDA)

7.1.5.1 Accident Assessment

The MDA is a support agency for Accident Assessment.

The MDA will support the Department of the Environment (MDE) accident assessment operations by providing personnel to assist in sample collection.

7.1.5.2 Notification and Communication

The Assistant Secretary of Animal Health and Consumer Services, MDA, Director of Animal Health Laboratory, Frederick, MD, will be notified of an accident at a FNF affecting the State during working hours by telephone from MEMA. Following completion of an Accident Report Form, notification will be verified according to Standard Operation Procedures. During other than normal working hours, MEMA will contact the Administrative Assistant, MDA, or alternate by telephone at home. After receiving notification, MDA personnel will be notified by telephone as necessary. Work and home telephone numbers are provided for 24-hour notification.

The MDA will notify its State EOC representatives upon declaration of an Alert class accident and instruct them to report the State EOC upon escalation to or declaration of Site Area Emergency or General Emergency class accidents.

Upon declaration of a Site Area Emergency, MDE will notify the MDA representative of the Ingestion Pathway Coordinating Committee to report to the IPCC, located at MDE Headquarters.

7.1.5.3 Command and Coordination

The Assistant Secretary of Animal Health and Consumer Services, MDA, Director of Animal Health Laboratory, Frederick, MD, will be in charge of MDA operations. All requests for assistance from field teams will be directed to the Administrative Assistant. The Administrative Assistant will direct all requests for assistance on a State or federal level to accomplish assigned tasks through the State Emergency Operations Center (EOC).

7.1.5.4 Protective Actions

The MDA is a support agency for Food, Water, Milk and Livestock Feed Control.

<u>Food, Water, Milk, and Livestock Feed Control</u>

The MDA, in coordination with DHMH, and DNR, will support MDE Food, Water, Milk, and Livestock Feed Control operations should control of food items be determined necessary by the Secretary of the Environment.

The MDA will control food, water, milk, and livestock feed by prohibiting use of land or pasture, by quarantining animals or plants, or by prohibiting sale and distribution of contaminated food.

The MDA will also coordinate with the Department of Transportation for the shipment of alternate feed supplies for livestock taken off pasture.

7.1.5.5 Parallel Actions

The MDA is a support agency for Mass Care.

Mass Care

The MDA will support the mass care coordination of the American Red Cross (ARC) by locating supplies of food and milk for evacuation centers, if necessary. The MDA will coordinate with the MSDE and DOT for transportation support and food distribution.

7.1.5.6 Public Information

The MDA will provide any assistance required by the State PIO in the implementation of the REP Public Information Program. All departmental media announcements are to be coordinated with the State PIO prior to their release.

DEPARTMENT OF NATURAL RESOURCES

7.1.6 Department of Natural Resources (DNR)

The DNR includes four agencies which have been assigned responsibilities in the event of an accident at a FNF affecting the State of Maryland. These four agencies are:

The Natural Resources Police (NRP)

Forest, Park, and Wildlife Services (FPWS)

The Power Plant Research Program (PPRP)

The Tidal Fisheries Division (TFD)

Each agency is summarized to identify its assigned responsibilities.

DNR - NATURAL RESOURCES POLICE

7.1.6.1 Natural Resources Police (NRP)

7.1.6.1.1 Accident Assessment

The NRP will support the accident assessment operations of the Department of the Environment (MDE) by conducting overwater field monitoring and by providing transportation over waterways for other field monitoring teams as necessary.

7.1.6.1.2 Notification and Communication

The NRP Duty Officer will be notified of an accident at an FNF affecting the State by telephone or radio at the NRP Communication Center for MEMA. The NRP Communications Center is manned 24-hours per day. Following completion of an Accident Report Form. The NRP Duty Officer will notify the DNR Secretary, the FPWS Communications Center Duty Officer, PPRP, and the TFD Directors or their alternates, and NRP personnel by telephone or radio.

The NRP will notify the DNR's State EOC representatives upon declaration of an Alert class accident and instruct them to report to the State EOC upon escalation to or declaration of Site Area Emergency or General Emergency class accidents.

Communications will be maintained by NRP personnel with the NRP Communications Center and with the State EOC by telephone or NRP radio.

7.1.6.1.3 Command and Coordination

The Superintendent, NRP, or alternate, the Division Chief will be in charge of the NRP emergency operations.

7.1.6.1.4 Protective Actions

The NRP is a support agency for Take Shelter, Thyroid Protection, Evacuation, and for Access Control.

Take Shelter

The NRP will support MEMA in take shelter operations by providing notification to mariners of take shelter actions and procedures by public address systems from boats and/or motor vehicles, by personal contact, or by VHF or citizen's band radio.

Potassium Iodide

The NRP will support MEMA in Thyroid Protection instructions by providing notification to mariners of the availability of Potassium Iodide at the county reception centers by public address systems from boats and/or motor vehicles, by personal contact, or by VHF or citizen's band radio.

Evacuation

The NRP will support MEMA in evacuation operations by coordinating the evacuation of pleasure boats from the waters in the FNF area. The NRP will provide boat transportation for evacuees from special areas, if necessary. The NRP will provide evacuation notification information to mariners by public address system from boats and/or motor vehicles, by personal contact, or by VHF or citizen's band radio.

Access Control

The NRP will support the Maryland State Police (MSP) access control operations by restricting access of watercraft along waterways through the establishment and maintenance of access control points.

7.1.6.1.5 Parallel Actions

The NRP is a support agency for Emergency Medical Services and for Law Enforcement and Crime Prevention.

Emergency Medical Services

The NRP will support the Maryland Institute for Emergency Medical Services System (MIEMSS) in emergency medical services operations. The NRP will provide transportation for injured personnel as directed by MIEMSS.

Law Enforcement and Crime Prevention

The NRP will support the MSP in law enforcement and crime prevention operations as requested by the MSP. (The NRP have all the police powers conferred upon police officers of the State and such powers may be exercised anywhere within the State.)

7.1.6.1.6 Public Information

The NRP will provide any assistance required by the State PIO in the implementation of the REP Public Information Program. All departmental media announcements are to be coordinated with the State PIO prior to their release.

7.1.6.2 Forest, Park and Wildlife Services (FPWS)

7.1.6.2.1 Accident Assessment

The FPWS has no assigned responsibility for this function.

7.1.6.2.2 Notification and Communication

The SFPS Communication Center Duty Officer will be notified of an accident at a FNF affecting the State by telephone from the Natural Resources Police (NRP). Following completion, of an Accident Report Form, the notification will be verified according to Standard Operating Procedures.

After receiving notification, SFPS personnel will be notified by telephone and FPWS radio. Work and home telephone numbers are provided for 24-hour notification.

Communication between SFPS personnel and SFPS Communication Center will be maintained by telephone and radio.

7.1.6.2.3 Command and Coordination

The Chief, Resource Protection, or alternate, the Supervisor of Law Enforcement, will be in charge of the FPWS emergency operations.

7.1.6.2.4 Protective Actions

The FPWS is a support agency for Take Shelter, for Evacuation, and for Access Control.

Take Shelter

The FPWS will support MEMA take shelter operations by alerting the public within FPWS parks and recreation areas of take shelter actions and procedures by mobile public address systems and/or personal contact. Campers and visitors will be directed to leave the area and notified of alternate facilities.

Potassium Iodide

The FPWS will support MEMA in Thyroid Protection instructions by alerting the public within FPWS parks and recreation areas of the availability of Potassium Iodide at the county reception centers by mobile public address systems and/or personal contact. Campers and visitors will be directed to leave the area and notified of alternate facilities.

Evacuation

The FPWS will support MEMA evacuation operations by alerting the public within FPWS parks and recreation areas of evacuation actions and procedures by mobile public address systems and/or personal contact.

Access Control

The FPWS will support the MSP access control operations by restricting access into FPWS parks and recreation areas through the establishment and maintenance of access control points. The FPWS will also support the MSP in manning highway access control points, if necessary.

7.1.6.2.5 Parallel Actions

The FPWS is a support agency for Relocation and Reentry.

Relocation

The FPWS rangers will support MEMA in relocation operations by notifying campers that relocation in affected areas has been recommended or directed by the Secretary of the Environment based upon assessment by the AAC.

Return

The FPWS rangers will support MEMA in return operations by notifying evacuated campers that it is safe to return to the affected areas.

7.1.6.2.6 Public Information

The FPWS will provide any assistance required by the State PIO in the implementation of the REP Public Information Program. All departmental media announcements are to be coordinated with the State PIO prior to their release.

7.1.6.3 Power Plant Research Program (PPRP)

7.1.6.3.1 Accident Assessment

The PPRP is a support agency for Accident Assessment.

The PPRP will support the Department of the Environment accident assessment operations by providing trained personnel to assist in sample analysis, and dose projections at both the AAC and IPCC.

7.1.6.3.2 Notification and Communication

The PPRP will be notified of an accident at an FNF affecting the State by telephone call to the Manager, Nuclear Programs or alternate, from the NRP Communications Center, the MDE-RHP and/or MEMA. Work and home telephone numbers are provided for 24-hour notification.

Following completion of an Accident Report Form, the notification message will be verified according to Standard Operating Procedures.

After receiving notification the Director, PPRP, or alternate, will then telephone PPRP personnel who will provide support in accident assessment operations. Work and home telephone numbers are provided for 24-hour notification.

Communications between PPRP personnel will be maintained by telephone and Maryland State Police radio for field teams.

7.1.6.3.3 Command and Coordination

The PPRP personnel involved in Accident Assessment will be commanded by the Manager, Nuclear Programs, or alternate.

7.1.6.3.4 Protective Actions

The PPRP had no assigned responsibility for this function.

7.1.6.3.5 Parallel Actions

The PPRP had no assigned responsibility for this function.

7.1.6.3.6 Public Information

The PPRP will provide any assistance required by the State PIO in the implementation of the REP Public Information Program. All departmental media announcements are to be coordinated with the State PIO prior to their release.

DNR - TIDAL FISHERIES DIVISION

7.1.6.4 Tidal Fisheries Division (TFD)

7.1.6.4.1 Accident Assessment

The TFD is a support agency for Accident Assessment.

The TFD will support the Department of the Environment (MDE) accident assessment operations by providing personnel and equipment to assist in the collection of shellfish and finfish samples.

7.1.6.4.2 Notification and Communication

The Director, TFD, or alternate, the Assistant Director, will be notified of an accident at an FNF affecting the state by telephone from the NRP Communications Center. Work and home telephone numbers are provided for 24-hour notification.

Following completion of an Accident Report Form, the notification message will be verified according to Standard Operating Procedures.

After receiving notification, the Director, TFD will notify key department personnel by telephone or personal contact. During work hours, field personnel will be contacted by vehicle radio communications. Work and home telephone numbers and radio frequencies are provided for 24-hour Communication.

7.1.6.4.3 Command and Coordination

The Director, TFD or alternate, the Assistant Director, will be in charge of the TFD emergency response operations.

7.1.6.4.4 Protective Actions

The TFD is a support agency for Food, Water, Milk, and Livestock Feed Control.

Food, Water, Milk and Livestock Feed Control

The TFD, in coordination with DHMH and MDA, will support MDE in food, water, milk, and livestock feed control operations. The TFD, upon the direction of the Secretary of the Environment, will support in controlling harvesting of contaminated shellfish.

7.1.6.4.5 Parallel Actions

The TFD has no assigned responsibility for this function.

7.1.6.4.6 Public Information

The TFD will provide any assistance required by the State PIO in the implementation of the REP Public Information Program. All departmental media announcements are to be coordinated with the State PIO prior to their release.

MARYLAND STATE POLICE

7.1.7 Maryland State Police (MSP)

7.1.7.1 Accident Assessment

The MSP will support the Department of the Environment (MDE) in Accident Assessment efforts in the event of an accident at an FNF affecting the State of Maryland

The MSP will provide land and/or air transportation within Maryland and communications for MDE field monitoring teams and equipment. The MSP will assist in radiological field monitoring employing radiation detection equipment under the direction of the County Radiological Officer or Civil Defense /Emergency Management Agency.

7.1.7.1 Notification and Communication

During working hours, the MSP State Headquarters Duty Officer (24 hour operation) will be notified of an accident at an FNF affecting the State by telephone from MEMA. Following completion of an Accident Report Form, notification will be verified according to Standard Operating Procedures.

After working hours, the MSP Duty Officer answers all incoming emergency calls for MEMA. The MSP Duty Officer will receive notification directly from the FNF via dedicated telephone, commercial telephone, or radio. The MSP Duty Officer will then notify the MEMA Duty Officer of the accident by pager or telephone.

The MSP will notify its State EOC representatives upon declaration of alert class accident and instruct them to report to the State EOC upon escalation to or declaration of Site Area Emergency or General Emergency class accidents.

7.1.7.3 Command and Coordination

The MSP Superintendent or alternate, the Deputy Superintendent, will be in charge of the MSP emergency response operations.

The Superintendent will provide overall direction to the local MSP personnel in the affected Counties. The Superintendent or designee will report to the State EOC to represent the MSP.

7.1.7.4 Protective Actions

The MSP is a support agency for Take Shelter Thyroid Protection, and for Evacuation and is the Key State agency for Access Control.

<u>Take Shelter</u>

The MSP will support MEMA in take shelter operations by notifying the public by mobile public address systems. The MSP will also provide a public address-equipped aircraft, if request.

Potassium Iodide

The MSP will support MEMA in providing thyroid protection instructions by notifying the public by mobile public address systems. The MSP will also provide a public address-equipped aircraft, if request.

Evacuation

The MSP will support MEMA in evacuation operations by notifying the public by mobile public address systems. The MSP will notify the public by direct personal contact, if necessary, and will provide a public address-equipped aircraft, if requested. The MSP will assist in selecting evacuation routes and implementing their use.

Access Control

The MSP is the 'Key State agency for access control operations and will coordinate State support agencies in establishing access control points. The MSP will provide personnel and equipment to man designated access control points.

A listing of support agencies is presented in Table 5-3, Agency Responsibility Matrix.

7.1.7.5 Parallel Actions

The MSP is a support agency for Emergency Medical Services, the key State agency for Law Enforcement and Crime Prevention, and a support agency for Relocation and Reentry.

Emergency Medical Services

The MSP will support the Maryland Institute for Emergency Medical Services Systems (MIEMSS) in emergency medical services operations by providing MSP Medivac helicopters for emergency medical transportation purposes.

Law Enforcement and Crime Prevention

The MSP is the key State agency for law enforcement and crime prevention operations and will provide personnel and equipment to maintain law and order. The MSP will coordinate the State support agencies.

A listing of support agencies is presented in Table 5-3, Agency Responsibility Matrix.

Relocation

The MSP will support MEMA in Relocation operations by notifying the public when relocation areas have been identified by the AAC and directed by the Secretary of the Environment.

Return

The MSP will support MEMA in return operations by assisting county efforts to ensure the orderly flow of traffic back into the area.

7.1.7.6 Public Information

The MSP will provide any assistance required by the State PIO in the implementation of the REP Public Information Program. All MSP media announcements are to be coordinated with the State PIO prior to their release.

DEPARTMENT OF HUMAN RESOURCES

7.1.8 Department of Human Resources (DHR)

7.1.8.1 Accident Assessment

The DHR has no assigned responsibility for this function.

7.1.8.2 Notification and Communication

The Disaster Assistance Office or alternate, the Assistant Director for Administration, will be notified of an accident at an FNF affecting the State of Maryland during working hours by telephone from MEMA. After working hours, the Disaster Assistance Officer or alternate will be notified at home by telephone call. Work and home telephone numbers are provided for 24-hour notification.

Following completion of an Accident Report Form, notification will be verified according to Standard Operating Procedures. After receiving notification, the DHR will initiate its personnel telephone call list. Work and home telephone numbers are provided for 24-hour notification. Communications will be maintained with the State EOC by telephone.

The DHR will notify its State EOC representative upon declaration of an Alert Class accident and instruct them to report to the State EOC upon escalation to or declaration of a Site Area Emergency or General Emergency class accidents.

7.1.8.3 Command and Coordination

The Secretary or the authorized designee will be in charge of DHR operations. The Disaster Assistance Officer will coordinate the DHR emergency response activities.

7.1.8.4 Protective actions

The DHR has no assigned responsibility for this function.

7.1.8.5 Parallel Actions

The DHR will support American Red Cross in Mass Care Operations.

<u>Mass Care</u>

The DHR will support the mass care operations of the Maryland Departments of Agriculture, Transportation, Education, Housing and Community Development, the Office of the Comptroller, the American Red Cross, and the Salvation Army. Routine medical services provided for by local medical organizations at the County level.

The DHR will coordinate the assignment of personnel to local assembly areas and evacuation centers, if necessary.

7.1.8.6 Public Information

The DHR will provide any assistance required by the State PIO in the implementation of the REP Public Information Program. All departmental media announcements are to be coordinated with the State PIO prior to their release.

DEPARTMENT OF TRANSPORATION

7.1.9. Department of Transportation (MDOT)

The State of Maryland Department of Transportation includes two administration which have assigned responsibilities in the event of an accident at an FNF affecting the State of Maryland. These two administrations are:

The State Highway Administration (SHA)

The Mass Transit Administration (MTA)

Each Administration is summarized to identify its assigned responsibilities.

7.1.9.1 State Highway Administration (SHA)

7.1.9.1.2 Accident Assessment

The SHA has no assigned responsibility for this function.

7.1.9.1.3 Notification and Communication

The SHA Statewide Operations Center will be notified of an accident at an FNF affecting the State by radio or telephone from MEMA (24-hour coverage is provided). Following completion of an Accident Report Form, notification will be verified according to Standard Operating Procedures. The notification may also be verified by telephone hot line to the Maryland State Police (MSP) Headquarters. After receiving notification, the MDOT Secretary, the MTA Radio Room Duty Officer, and SHA personnel will be notified by telephone or radio. Work and home telephone numbers are provided for 24-hour notification.

The SHA will notify the DOT's State EOC representatives upon declaration of an Alert class accident and instruct them to report to the State EOC upon escalation to or declaration of Site Area Emergency or General Emergency class accidents.

The SHA personnel will maintain communications with the State EOC by radio and telephone.

7.1.9.1.3 Command and Coordination

The Deputy Chief Engineer, Construction or alternate, the Deputy Chief Engineer, Maintenance, will be in charge of the SHA emergency response operations. The Deputy Chief Engineer or designee will report to the State EOC to represent the SHA as requested. All requests for assistance from the State will be directed to the State EOC.

7.1.9.1.4 Protective Actions

The SHA is a support agency for Evacuation, for Access Control, and for Food, Water, Milk, and Livestock Feed Control.

<u>Evacuation</u>

The SHA will support MEMA in the evacuation operations by providing trucks for evacuation transportation, if necessary.

<u>Access Control</u>

The SHA will support the MSP by supplying access control equipment, such as road barricades, traffic cones, flashing arrow boards, and special signs, as needed. The SHA will provide personnel to assist in the manning of access control points, if necessary.

Food, Water, Milk, and Livestock Feed Control

The SHA will support the Department of Health and Mental Hygiene (DHMH) in coordination with the Maryland Department of Agriculture in providing transportation of alternate feed supplies for livestock taken off pasture.

7.1.9.1.5 Parallel Actions

The SHA is a support agency for Mass Care, Relocation and for Reentry.

Mass Care

The SHA will support the American Red Cross in mass care operations by providing transportation for food, clothing, bedding, and other items as requested by the ARC. The SHA, in conjunction with the Departments of Agriculture and Health and Mental Hygiene, will provide transportation of alternate feed supplies for livestock taken off pasture.

Relocation

The SHA will support MEMA by providing traffic control equipment, such as traffic control and flashing arrow boards, and personnel to man traffic control points to permit orderly relocation from the area.

Return

The SHA will support MEMA by providing traffic control equipment, such as traffic control and flashing arrow boards, and personnel to man traffic control points so as to permit orderly return into the area.

7.1.9.1.6 Public Information

The SHA will provide any assistance required by the State PIO in the implementation of the REP Public Information Program. All departmental media announcements are to be coordinated with the State PIO prior to their release.

7.1.9.2 Mass Transit Administration (MTA)

7.1.9.2.1 Accident Assessment

The MTA has no assigned responsibility for this function.

7.1.9.2.2 Notification and Communication

The MTA will be notified of an accident at an FNF affecting the State by telephone call to the MTA Radio Room Duty Officer from the SHA Communications Center. The MTA Radio Room is manned 24 - hours per day. Following completion of an Accident Report Form, notification will be verified according to Standard Operation Procedures. After receiving notification, MTA bus drivers in the Baltimore Metropolitan area will be notified during work hours by radio. After working hours, MTA personnel will be notified at home by telephone. Home telephone numbers are provided for 24-hour notification.

The MTA will maintain communications with its personnel by radio communications through an SHA mobile unit assigned to each bus convoy. Radio communications range is approximately 20 miles. A mobile communications unit will be provided by the SHA to maintain communications with MTA buses beyond 20 miles from the base station in Baltimore. The MTA will maintain communications with the State by EOC by telephone.

7.1.9.2.3 Command and Coordination

The Administrator, MTA or alternate, the General Manager for Operations, will be in charge of the MTA emergency response operations.

7.1.9.2.4 Protective Actions

The MTA is a support agency for Evacuation.

Evacuation

The MTA will support MEMA in evacuation operations by providing buses and drivers to assist in the transporting of residents and special facilities residents (nursing homes, etc.) out of the affected area.

7.1.9.2.5 Parallel Actions

The MTA is a support agency for Relocation and Return.

Relocation

The MTA will support MEMA in relocation operations by providing buses and drivers to assist in the transporting of residents and special facilities residents (nursing homes, etc.) out of the affected area.

Return

The MTA will support MEMA in return operations by providing buses and drivers to assist in the transporting of residents and special facilities residents (nursing homes, etc.) back to their residences.

7.1.9.2.6 Public Information

The MTA will provide any assistance required by the State PIO in the implementation of the REP Public Information Program. All departmental media announcements are to be coordinated with the State PIO prior to their release.

MARYLAND STATE DEPARTMENT OF EDUCATION

7.1.10 Maryland State Department of Education (MSDE)

7.1.10.1 Accident Assessment

The MSDE has no assigned responsibility for this function.

7.1.10.2 Notification and Communication

The Chief, Food Distribution Section, or alternate, the Senior Specialist, Food Distribution Section, will be notified of an accident at an FNF affecting the State of Maryland during normal working hours by telephone call from MEMA. After normal working hours, the Chief, Food Distribution Section, or alternate will be notified at home by telephone from MEMA. Alternate work and home telephone numbers are provided for 24-hour notification. Following completion of an Accident Report Form, notification will be verified according to Standard Operating Procedures and the Chief will ensure that MSDE has been notified. After receiving notification, section personnel will be notified by telephone or personal contact. Work and home telephone numbers are provided for 24-hour notification.

The MSDE will notify its State EOC representatives upon declaration of an Alert class accident and instruct them to report to the State EOC upon escalation to or declaration of Site Area Emergency or General Emergency class accidents.

7.1.10.3 Command and Coordination

The Chief, Food Distribution Section, or alternate, the Senior Specialist, Food Distribution Section, will be in charge of the MSDE emergency response operations. Should the MSDE require assistance on a State or Federal level to accomplish assigned tasks, the Chief will direct all requests through the State EOC.

7.1.10.4 Protective Actions

The MSDE has no assigned responsibility for this function.

7.1.10.5 Parallel Actions

The MSDE is a support agency for Mass Care.

<u>Mass Care</u>

The MSDE will support the American Red Cross in mass care operations. The MSDE will contact the U.S. Department of Agriculture for permission to distribute necessary food supplies and will coordinate with the Mid Atlantic Regional Office of the United States Department of Agriculture for food distribution. The MSDE will cooperate with the State Highway Administration, the Maryland Military Department/National Guard, the American Red Cross, and the County Board(s) of Education for transportation of food supplies from MSDE centers.

7.1.10.6 Public Information

The MSDE will provide any assistance required by the State PIO in the implementation of the REP Public Information Program. All departmental media announcements are to be coordinated with the State PIO prior to their release.

DEPARTMENT OF HOUSING AND COMMUNITY DEVELOPMENT

7.1.11 Department of Housing and Community Development (DHCD)

7.1.11.1 Accident Assessment

The DHCD has no assigned responsibility for this function.

7.1.11.2 Notification and Communication

The Secretary, DHCD, or alternate, the Director, officer of Federal Regulations, will be notified of an accident at an FNF affecting the State of Maryland by telephone call from MEMA. After normal working hours, the secretary, or alternate will be notified by telephone at home. Following completion of an Accident Report Form, the notification will be verified according to Standard Operating procedures. After receiving notification DHCD personnel will be notified by telephone as necessary. Work and home telephone numbers are provided for 24-hour notification. Communication will be maintained between the State EOC and the DHCD by telephone.

The DHCD will notify its State EOC Representatives upon declaration of an Alert class accident and instruct them to report to the State EOC upon escalation to or declaration of Site Area Emergency or General Emergency class accidents.

7.1.11.3 Command and Coordination

The Secretary, working through the alternate, the Federal Relations Officer or Coordinator, Disaster Rehab, Renovation and Replacement Program, will be in company of DHCD emergency operations.

7.1.11.4 Protective Actions

The DHCD is a support agency for Mass Care.

Mass Care

The DHCD will support the mass care operations of the American Red Cross (ARC) by establishing operations near evacuation centers if evacuation of the area is required for an extended period (i.e. converted to relocation status). The DHCD will identify rental housing that would be available to evacuees for periods greater than 1 week.

7.1.11.6 Public Information

The DHCD will provide any assistance required by the State PIO in the implementation of the REP Public Information Program. All departmental media announcements are to be coordinated with the State PIO prior to their release.

MARYLAND MILITARY DEPARTMENT/NATIONAL GUARD

7.1.12 Maryland Military Department/National Guard (MMD/NG)

7.1.12.1 Accident Assessment

The MMD/NG will support the MDE in Accident Assessment by providing land and/or air transportation for field monitoring Teams and sampling at military installations as requested.

The MDNG will be prepared to provide drivers for three (3) vans. The vans will be provided by the State of Maryland and are equipped with radios, satellite phone, and cellular phones. MDNG personnel will carry personal gear for self-sustainment and 72 hours of rations. MDNG personnel will also carry a handheld radio that is capable of operating on the GUARDNET radio system. This requirement is based on the inability of local resources to provide this required support to MDE. If vans are inaccessible or terrain is a concern or requirement, the MDNG will be prepared to provide HMMWVs in support of this requirement.

When ground transportation is impractical or time is a factor, the MDNG will be prepared to provide transportation by aircraft. The aircraft will normally be met by ground transportation provided by the local jurisdiction. When required, the MDNG may be asked to provide the ground transportation if it cannot be provided by the local jurisdiction.

The MDNG 32nd Civil Support Team (CST) will provide direct support to the Maryland Department of the Environment upon notification of an emergency. Support will consist of radiological monitoring teams, hazard predictions, and support to the incident command system.

7.1.12.2 Notification and Communication

The MMD/NG Staff Duty Officer will be notified of an accident at an FNF affecting the State of Maryland from MEMA by telephone. The MMD/NG Duty Officer can be reached through the MJOC. Following the completion and receipt of an Accident Report Form from the State of Maryland, the MJOC will make notification according to MDNG Standard Operating Procedures. The MDNG senior leadership will maintain communications contact with the MJOC.

The MMD/NG will notify its State EOC representatives (SEOC Liaison Officers) and the 32nd CST upon declaration of an Alert. The SEOC Representative will be instructed to report to the State Emergency Operations Center upon the increase to Level II or higher and/or the declaration of Site Area Emergency or General Emergency.

32nd CST will be recalled for stand-by/mission prep at the Ready Building upon declaration of a Level II or higher Alert and/or the declaration of Site Area Emergency or General Emergency.

7.1.12.3 Command and Coordination

The Adjutant General commands the MMD/NG. MMD/NG will assist, when ordered by the Governor, by providing forces available at the time of the accident. MMD/NG forces will assemble at their armories for deployment. Military commanders will respond to mission-type requests through normal chain of command. MMD/NG Command, in coordination with MEMA, will direct the MMD/NG.

7.1.12.4 Protective Actions

The MMD/NG is a support agency for Evacuation, for Access Control, and for Food, Water, Milk, and Livestock Feed Control.

Evacuation

The MMD/NG will support MEMA in evacuation operations by supporting evacuation operations. The MDNG may be asked to support ground and air transportation of ordered evacuation areas after local, state, and contract resources have been exhausted. The MDNG may be required to support the evacuation of up to 500 personnel over dispersed pick-up locations. The MDNG will not be required to support the evacuation of special needs populations that require additional handling or care. If the evacuation order occurs during a winter storm event, additional 4x4 resources may be required to include the support of local jurisdiction EMS personnel with 4x4 HMMWV ambulances.

The expected response time for MDNG resources to support the evacuation process is from the time of the evacuation order plus 6 hours. The exception to this response time is when MDNG personnel have been requested to pre-position as a result of the initial emergency alert.

MDNG planners will coordinate with state planners during the initial alert phase anticipating that an evacuation order may be ordered.

Access Control

The MMD/NG will support the MSP in access control operations by providing personnel to staff access control points. The initial manning of access control points will be manned by the MSP. The MDNG should anticipate additional support to MSP operations or by providing relief in place in support of MSP deny access operations. Additional security support may be requested by local jurisdictions to support police and sheriff agencies with security operations, perimeter control, and access control point operations. The MDNG should be prepared to provide personnel from their National Guard Reaction Force (NGRF) in support of this operation within the first six (6) hours of the request.

Food, Water, Milk, and Livestock Feed Control

The MMD/NG will support the DHMH in food, water, milk, and livestock feed control operations by notifying military installations of any need to control contaminated commodities. The MDNG will establish liaison with Patuxent River NAS, Indian Head, USNA, Fort Meade, Fort Detrick, and Aberdeen Proving Ground.

7.1.12.5 Parallel Actions

The MMD/NG is a support agency for Emergency Medical Services, for Radiation Exposure Control, and for Law Enforcement and Crime Prevention.

Radiation Exposure Control

The MDNG 32nd Civil Support Team (CST) will provide direct support to the Maryland Department of the Environment upon notification of an emergency. Support will consist of radiological monitoring teams, hazard predictions, and support to the incident command system.

The 32nd CST will be prepared to assist MDE at reception assistance centers.

Law Enforcement and Crime Prevention

The MMD/NG will support the Maryland State Police (MSP) by providing military personnel to assist in law enforcement operations. The MDNG will be prepared to support deny entry operations, protect property, control civil disobedience, and perform aerial observation/command and control support to civilian law enforcement.

Air Space Management

The MDNG will be prepared to provide an aviation officer to the State Emergency Operations Center to support air space management and coordination of local, state, and federal aerial response assets for the incident.

7.1.12.6 Public Information

The MMD/NG will provide any assistance required by the State PIO in the implementation of the REP Public Information Program. All departmental media announcements are to be coordinated with the State PIO prior to their release.

7.1.13 Maryland Institute for Emergency Medical Services Systems (MIEMSS)

7.1.13.1 Accident Assessment

MIEMSS has no assigned responsibility for this function.

7.1.13.2 Notification and Communication

MIEMSS will be notified of an accident at an FNF affecting the State of Maryland by radio or telephone call from MEMA to MIEMSS Central System Communications Center (SYSCOM) or by telephone to the MIEMSS Emergency Medical Resources Center (EMRC). Both the SSCOM and the EMRC provide 24-hour coverage. County Central Alarm systems may also initiate accident notification.

Following completion of an Accident Report Form, notification will be verified according to Standard Operating Procedures. After receiving notification, MIEMSS personnel will be notified by SYSCOM by means of telephone, radio, or beeper.

MIEMSS will notify its State EOC representatives upon declaration of an Alert class accident and instruct them to report to the State EOC upon escalation to or declaration of Site Area Emergency or General Emergency class accidents.

Communications will be maintained by the EMRC/SYSCOM at the direction of the Director of Emergency Operations .The EMS Communication System, Facility Resource Emergency Database, POTS, Cellular Phones, and Satellite Communication are all tools that could be used.

7.1.13.3Command and Coordination

The Director, MIEMSS, or Emergency Operations, will be in charge of MIEMSS emergency operations. Any requests for assistance from State agencies will be directed to the State EOC.

7.1.13.4 Protective Actions

MIEMSS will act in an advisory capacity to the Governor on emergency medical service matters as they relate to Protective Actions. MIEMSS will assess the status of operations at Hospitals, nursing homes and other patient care facilities and determine the need for state support, in-place sheltering, or evacuation of said facilities.

7.1.13.5 Parallel Actions

MIEMSS is the key State agency for Emergency Medical Services.

<u>Emergency Medical Services</u>

MIEMSS, as the key State agency for emergency medical services operations, will coordinate statewide emergency medical services and referral for the critically ill or injured. MIEMSS will coordinate emergency medical services operation with local agencies responsible for EMS and will coordinate any EMS support from of the State Police, the DNR Natural Resources Police, the Maryland Military Department/National Guard, and the American Red Cross. MIEMSS will coordinate assignments with these agencies, as well as with other private agencies having existing agreements.

7.1.13.6 Public Information

MIEMSS will provide any assistance required by the State PIO in the implementation of the REP Public Information Program. All departmental media announcements are to be coordinated with the State PIO prior to their release.

OFFICE OF THE COMPTROLLER OF THE TREASURY

7.1.14 Office of the Comptroller of the Treasury (OCT)

7.1.14.1 Accident Assessment

The OCT has no assigned responsibility for this function.

7.1.14.2 Notification and Communication

The Comptroller or alternate, the Chief Deputy Comptroller, will be notified of an accident at an FNF affecting the state of Maryland by telephone from MEMA. An alternative means of notification will be by telephone from the Governor. Work and home telephone numbers are provided for 24-hour notification. The OCT may also be notified through the Maryland State Police (MSP) radio or crime identification network, which provides for 24-hour notification. Following completion of an Accident Report Form, the notification will be verified according to Standard Operating Procedures. After receiving notification, necessary OCT personnel will be contacted by telephone. Work and home telephone numbers are provided for 24-hour notification. Communications with the State Emergency Operations Center (EOC) will be maintained by telephone or MSP radio.

7.1.14.3 Command and Coordination

The Comptroller or alternate, the Chief Deputy Comptroller, will be in charge of OCT emergency response operations.

7.1.14.4 Protective Actions

The OCT has no assigned responsibility for this function. However, upon written official request from MEMA or at the direction of the Governor, the OCT will allocate funds to State agencies so that Protective Actions may be adequately provided.

7.1.14.5 Parallel Actions

The OCT is a support agency for Law Enforcement and Crime Prevention and for Mass Care.

Upon written official request from MEMA or at the direction of the Governor, the OCT will allocate funds to State agencies so that Parallel Actions may be adequately provided.

<u>Law Enforcement and Crime Prevention</u>

The OCT will support the law enforcement and crime prevention operations of the MSP by providing law enforcement personnel with arrest power (Alcohol and Tobacco Tax Assessment Officers) to assist the MSP in maintaining law and order as requested.

<u>Mass Care</u>

Upon written official request from MEMA or at the direction of the Governor, the OCT will allocate funds to State agencies so that mass care functions may be adequately provided.

7.1.14.6 Public Information

All media requests for information should be forwarded to the State PIO.

STATE FIRE MARSHAL

7.1.15 State Fire Marshal (SFM)

7.1.15.1 Accident Assessment

The SFM is a support agency for accident assessment.

The SFM will support the Department of the Environment (MDE) in accident assessment by providing personnel trained and equipped to monitor radiation exposure rates as directed by the MDE.

7.1.15.2 Notification and Communication

The Fire Marshal or alternate, the Chief Fire Investigator, will be notified of an accident at an FNF affecting the State during working hours by telephone from MEMA. Following completion of an Accident Report Form, notification will be verified according to Standard Operating Procedures. Notification during other than normal working hours will be made by telephone to the Fire Marshal or alternate at home. After receiving notification, SFM personnel will be notified by telephone as necessary. Work and home telephone numbers for SFM personnel are provided for 24-hour notification.

The SFM will notify its State EOC representatives upon declaration of an Alert class accident and instruct them to report to the State EOC upon escalation to or declaration of Site Area Emergency or General Emergency class accidents.

SFM field personnel also have radio contact with Maryland State Police (MSP) radio, which will serve as an alternate means of notification.

Communications between SFM personnel will be by telephone or MSP radio.

7.1.15.3 Command and Coordination

The Fire Marshal or alternate, the Chief Fire Investigator, will be in charge of SFM operations. All requests for assistance from SFM field personnel will be directed to the Fire Marshal. The Fire Marshal will direct all requests for assistance on a State or Federal level to accomplish assigned tasks through the State Emergency Operations Center (EOC).

7.1.15.4 Protective Actions

The SFM has no assigned responsibility for this function.

7.I.15.5 Parallel Actions

The SFM is a support agency for Radiation Exposure Control.

Radiation Exposure Control

The SFM will provide support for Radiation Exposure Control operations which are conducted by the Plume Zone Counties under the guidance of the MDE. When requested by a Plume Zone County to provide assistance in Radiation Exposure Control monitoring operations, local fire/rescue responders from unaffected jurisdictions may be directed by the SFM to contact the Plume Zone County EOC to determine monitoring station locations for emergency workers and evacuees. Where two or more requests are received, the SFM will determine which requests will receive attention. SFM personnel may be withdrawn at any time by the SFM in order to perform emergency functions elsewhere in accordance with State law.

7.1.15.6 Public Information

The SFM will provide any assistance required by the State PIO in the implementation of the REP Public Information Program. All departmental media announcements are to be coordinated with the State PIO prior to their release.

7.2 COUNTY OPERATIONS

See Table 3-11 for a listing of Maryland Counties which may be affected by an accident at an FNF.

7.2.1 Plume Zone Counties

Plume Zone Counties are discussed in detail in the local county Radiological Emergency Plans.

7.2.1.1 Accident Assessment

Upon declaration of an accident which involves a release of radioactivity to the environment, the FNF will provide the Plume Zone Counties with accident-related information and recommended Protective Actions. County field monitoring teams may be dispatched to confirm radiation monitoring. Trained personnel may assist the MDE in the collection of sample media. The Plume Zone Counties will also provide transportation and communication support for MDE field monitoring teams.

Until such time as the MDE brings its resources to bear, the Plume Zone Counties may initiate Protective Actions based upon its field monitoring results and the information and recommendations of the FNF. The County EOC and the State EOC will continually keep each other informed of the situation.

7.2.1.2 Notification and Communication

Refer to the specific county radiological emergency plans for details of Notification and Communication for Plume Zone Counties.

7.2.1.3 Command and Coordination

County operations will be under the overall direction and control of the head of County government. The County Emergency Management (EM) Director will provide overall coordination of County, private, and State agencies having functions in the County REP and will coordinate requests for assistance from these agencies. Any assistance, when rendered to the County, will come under the operational control of the County.

Each State and private agency having a functional responsibility in the County REP and each responsible County agency will provide a representative to the County EOC at the direction of the County EM Director. These representatives will have the authority to commit the local resources of the agency represented and speak on behalf of the head of that agency.

7.2.1.4 Protective Actions

When MEMA is informed of the recommendations or directives of the Secretary, MDE or the Governor, it will contact the County EM Director. In the absence of such recommendations of directives, the head of County government has the authority to initiate Protective Actions based upon information and recommendations from the FNF. Refer to respective county radiological emergency plans for details.

7.2.1.5 Parallel Actions

The County will implement whatever Parallel Actions are necessary to ensure the public's health and welfare. If radiation levels are such that addition household must be relocated from an affected area or when radiation levels are such that it is safe to return to an affected area, the Secretary, MDE or MEMA will notify the County EM Director. Refer to respective county radiological emergency plans for details.

7.2.1.6 Public Information

In the event of an incident at an FNF, the Public Information Officer (PIO) will implement the County's Emergency JIS. The PIO will have access to all necessary information and will report on the radiological emergency and County emergency operations. The PIO has the responsibility to deliver the public comprehensive public announcements on a regular basis. The PIO will make all reasonable attempts to coordinate public information announcements with the State PIO and will utilize local public media in the implementation of public announcements.

7.2.2 Ingestion Zone Counties

A listing of Ingestion Zone Counties is presented in Table 3-11. A discussion of Ingestion Zone Operations is presented in Section 8.

7.2.2.1 Accident Assessment

As a result of a release of radioactivity to the environment by an FNF, it may be necessary to sample foodstuffs to determine if Protective Actions are necessary. The MDE will coordinate with affected Ingestion Zone Counties to arrange for personnel, equipment, and transportation to assist in sample collection.

7.2.2.2 Notification and Communication

In the event of an accident at an FNF, the Ingestion Zone Counties will be notified by MEMA via NAWAS. During normal working hours, the notification will go to the County Emergency Operations Center (EOC). After hours, the County Communications Center/Central Alarm (24-hour coverage) will be notified which, in turn, will notify the County EM Director.

7.2.2.3 Command and Coordination

County operations will be under the overall direction and control of the head of County government. The County EM Director will provide overall coordination of County, private, and State agencies operating within the County.

7.2.2.4 Protective Actions

Evacuation

Designated Ingestion Zone Counties are Evacuation Support Counties for Plume Zone Counties (see Table 3-12). In the event of an evacuation, these Evacuation Support Counties will be contacted by the Plume Zone Counties and arrangements made for the activation of Assembly Areas and Evacuation Centers.

Food, Water, Milk, and Livestock Feed Control

Ingestion Zone Counties will assist in the control and disposition of contaminated food, water, milk, and livestock feed as directed by the MDE.

7.2.2.5 Parallel Actions

Mass Care

Personnel will be assigned to staff Assembly Areas for the registration of evacuees and to staff Evacuation Centers. Food and bedding will also be provided at the Evacuation Centers.

Return

Upon determination by the Secretary, MDE, that it is safe to return to affected areas, the Evacuation Support Counties will coordinate with the Plume Zone Counties for the transport of evacuees back to their homes.

7.2.2.6 Public Information

In the event of an accident at an FNF, the Public Information Officer (PIO) will implement the County's Emergency JIS. The PIO will make all reasonable attempts to coordinate public information announcements with the State PIO and will utilize local public media in the implementation of public announcements.

PRIVATE AGENCIES

AMERICAN RED CROSS

7.3. PRIVATE AGENCIES

7.3.1 American Red Cross (ARC)

7.3.1.1 Accident Assessment

The ARC has no assigned responsibility for this function.

7.3.1.2 Notification and Communication

The Maryland Emergency Management Agency (MEMA), or the ARC County Representative, will notify the 24-hour switchboard in Baltimore of an accident at an FNF affecting the State of Maryland by telephone. The notification will be verified according to Standard Operating Procedures. After receiving notification, key personnel from the Washington, D.C. and the Baltimore ARC will be notified by telephone or beeper from the ARC switchboard. Communication among ARC personnel will be maintained by telephone.

7.3.1.3 Command and Coordination

The ARC representatives who will serve as operational coordinators for all ARC activities will be designated at the time of an accident. Interim coordination is assumed by the ARC Disaster Director. Operational headquarters will be established at convenient locations and an ARC representative will report to the State Emergency Operations Center (EOC)

7.3.1.4 Protective Actions

The ARC has no assigned responsibility for this function.

7.3.1.5 Parallel Actions

The ARC is a support agency for Emergency Medical Services and Key Agency for Mass Care.

<u>Emergency Medical Services</u>

The ARC will support the Maryland Institute for Emergency Medical Services Systems (MIEMSS) in emergency medical needs.

<u>Mass Care</u>

The ARC will coordinate the mass care operations for the State. This includes the support roles of the Maryland Departments of Agriculture, Transportation, Education, Housing and Community Development, The Office of the Comptroller, Human Resources, and the Salvation Army.

7.3.1.6 Public Information

All REP media announcements should be coordinated with the State PIO prior to their release.

THE SALVATION ARMY

7.3.2 The Salvation Army

7.3.2.1 Accident Assessment

The Salvation Army has no assigned responsibility for this function.

7.3.2.2 Notification and Communication

Key Salvation Army personnel will be notified of an accident at an FNF affecting the State of Maryland by telephone call from MEMA through the Salvation Army 24-our switchboard. The notification will be verified according to Standard Operating Procedures. After receiving notification, Salvation Army volunteers will be notified. The Salvation Army will maintain communications with the EOC by telephone.

7.3.2.3 Command and Coordination

The representatives having operational command of Salvation Army activities will be designated by the Salvation Army at the time of the accident. Interim command is assumed by the Salvation Army Divisional Secretary. Operational headquarters will be established at convenient locations and a Salvation Army representative will report to the State EOC. The Salvation Army will be in command of its resources mobilized for assisting emergency operations.

7.2.3.4 Protective Actions

The Salvation Army has no assigned responsibility for this function.

7.2.3.5 Parallel Actions

The Salvation Army is a support agency for Mass Care.

Mass Care

The Salvation Army will work in coordination with the mass care operations of the American Red Cross resources at the evacuation centers.

7.2.3.6 Public Information

All REP media announcements should be coordinated with the State PIO prior to their release.

7.4 FEDERAL AGENCIES

7.4.1 Department of Energy (DOE)

7.4.1.1 Accident Assessment

DOE will support the Department of the Environment's (MDE) accident assessment operations by providing advice and assistance as requested by the MDE.

DOE Region I, Brookhaven Area Office, provides prompt response through its Radiological Assistance Program (RAP). Additional accident assessment support may be requested by MDE or DOE Region I, initiating implementation of Federal Radiological Monitoring and Assessment Plan (FRMAP). Summaries of FRMAP and RAP are contained in attachments 9-6 and 9-7, respectively.

7.4.1.2 Notification and Communication

The DOE Region I Coordinator, Brookhaven National Laboratory, will be notified of an accident at an FNF by telephone from the Administrator, Radiological Health Program, or alternate, Assistant Administrator. The DOE Region I coordinator will verify the notification according to Standard Operating Procedures. The Coordinator will then implement the Radiological Assistance Plan. The DOE Region I Coordinator or the Administrator, Radiological Health Program, or alternate may notify DOE's Emergency Operating Center (EOC) in Germantown, Maryland requesting implementation of FRMAP. The DOE EOC will notify other appropriate FRMAP participating agencies as specific assistance becomes necessary. Communications will be maintained by telephone and/or radio.

7.4.1.3 Command and Coordination

Radiological assistance from RAP/FRMAP will be under the direction of MDE. The MDE will coordinate requests for DOE assistance for Protective and Parallel Actions.

7.4.1.4 Protective Actions

Assistance from DOE/FRMAP for the Protective Actions of Take Shelter, Thyroid Protection, Evacuation, Access Control, and Food, Water, Milk, and Livestock Feed Control will be coordinated through the MDE.

7.4.1.5 Parallel Actions

Assistance from DOE/FRMAP for the Parallel Actions of Emergency Medical Services, Radiation Exposure Control, Law Enforcement and Crime Prevention, Mass Care, Relocation, Reentry and Return will be coordinated through the MDE.

7.4.1.6 Public Information

All REP media announcements should be coordinated with the State PIO prior to their release.

FEDERAL AGENCIES

7.4.2 Federal Emergency Management Agency

7.4.2.1 Accident Assessment

FEMA has no assigned responsibility for this function.

7.4.2.2 Notification and Communication

MEMA will notify FEMA Region III headquarters, Philadelphia, of an accident at an FNF affecting the State of Maryland by the National Communication System (NACOM), commercial telephone, NAWAS, or Federal Radio. Request for full or partial Federal Radiological Emergency Response Plan (FRERP) implementation will be made by the Director, MEMA to the FEMA Region III Director or FEMA headquarters in Washington, D.C.

7.4.2.3 Command and Coordination

At the request of MEMA, FEMA Region III will provide a representative to the Maryland State EOC. MEMA will coordinate the Federal response through FEMA's representative at the State EOC. Any Federal support provided through FEMA/FRERP will be under the operational control of the State of Maryland, unless provided for otherwise by law.

7.4.2.4 Protective Actions

Support from FEMA for the Protective Actions of Take Shelter, Thyroid protection, Evacuation, Access Control, and Food, Water, Milk, and Livestock Feed Control will be coordinated through MEMA.

7.4.2.5 Support from FEMA for the Parallel Actions of Law Enforcement and Crime Prevention, Exposure Control, Mass Care, Relocation and Reentry will be coordinated through MEMA.

7.4.2.6 Public Information

All REP media announcements should be coordinated with the State PIO prior to their release.

7.4.3 United States Coast Guard (USCG)

7.4.3.1 Accident Assessment

The USCG will provide personnel, vessels and communications to assist the State of Maryland in Accident Assessment.

7.4.3.2 Notification and Communication

The USCG Sector Baltimore Command Duty Officer , will be notified of any incident at an FNF affecting the State of Maryland by telephone call from MEMA. The notification will be verified according to Standard Operating Procedures.

After receiving notification, USCG Sector Baltimore Command Duty Officer will make all appropriate follow on notifications. A USCG representative will be provided to the State EOC upon request.

7.4.3.3 Command and Coordination

USCG Sector Baltimore, will establish and maintain communications with the State EOC from the USCG Command Center.

7.4.3.4 Protective Actions

The USCG will, upon request, support the State and/or Counties in Take Shelter, Evacuation, and in Access Control.

Take Shelter

The USCG will support the take shelter operations of MEMA by notifying vessels in and around the affected waterways by issuing a "Notice to Mariners" over Marine VHF. USCG patrol boats in the area will be used to locate and notify any vessels that are not radio-equipped.

Evacuation

The USCG will support the evacuation operations of MEMA by notifying vessels in and around the affected waterways by issuing a "Notice to Mariners' over Marine VHF. USCG patrol boats in the area will be used to locate and notify vessels that are not radio-equipped.

Access Control

The USCG will support access control operations by establishing a safety or security zone in the area of concern as needed. The USCG will establish boundries for safe navigation. This information will be provided to the public via a "Notice to Mariners" broadcast over Marine VHF.

7.4.3.5. Parallel Actions

The USCG will, upon request, support the State and/or Counties in law enforcement and crime prevention on navigable waterways of Maryland.

Law Enforcement and Crime Prevention

The USCG will support law enforcement and crime prevention operations on navigable waters. The USCG is the key Federal agency for law enforcement and crime prevention on navigable waters of the United States.

7.4.3.6. Public Information

All USCG media interaction will be a coordinated effort among state and local response agencies.

7.4.3.7. The availability of Coast Guard l resources i.e. personnel and equipment is contingent upon operational tempo and response priorities.

SECTION 8

SUMMARY PROCEDURES

INGESTION ZONE OPERATIONS

8.1 INTRODUCTION

In the event of a major radiological accident, the food chain is likely to be a potential dose pathway to large segments of the surrounding population. For example, the dose to the thyroid of a child from drinking milk contaminated with radioiodine through the atmosphere pasture-cow-milk-child exposure pathway may be several times greater than the thyroid dose that the same child would receive breathing the same air that resulted in the contamination of the pasture. Therefore, the size of the area over which milk and other foods may have to be controlled could be much larger than the size of the area where the Protective Actions of Take Shelter or Evacuation would be implemented.

8.1.1 Ingestion Exposure Pathway Emergency Planning Zone

Section 3.2 presents the concept of generic Emergency Planning Zones (EPZs) around all nuclear power plants. EPZs are designated as areas for which planning is recommended to assure that prompt and effective actions can be taken to protect the public in the event of an accident. For commercial reactors a radius of about 50 miles was selected for the Ingestion Exposure Pathway Emergency Planning Zone. This zone is considered to be of sufficient size to provide for substantial reduction in health effects in the event of severe accidents. Maryland counties within the Ingestion EPZs of nearby commercial nuclear facilities are identified in Table 3-11 and Figure 3-2.

8.2 CONCEPT OF OPERATIONS

The Secretary, Department of the Environment, or alternate, is in charge of Ingestion Zone emergency operations. The DHMH, MDA, and DNR will support MDE in assessing the potential of and/or extent of radioactive contamination to food, water, milk, and livestock feed and also the determination of the need to restrict consumption of certain products. The DHMH and MDA will designate the locations within the Ingestion EPZ for the sampling of farm produce, water supplies, and livestock feed for analysis.

The Accident Assessment Center (AAC) and the Ingestion Pathway Coordinating Committee (IPCC) are the key coordinating bodies for Ingestion Zone emergency operations. Maps for recording survey and monitoring data, key land use data, dairies, food processing plants, water sheds, water supply intakes, treatment plants, and reservoirs are maintained by the IPCC. The IPCC will locate at the Secretary's Conference Room, Maryland Department of the Environment Headquarters in Baltimore. The AAC will serve as the initial coordinating center for MDE radiological emergency response operations, and is further discussed In Section 5.2.3.

The IPCC will direct Ingestion Pathway radiological sampling, analysis and interdiction operations. The IPCC will be activated by the MDE, if Ingestion Exposure Pathway sampling and/or control is deemed necessary by the AAC. DHMH, DNR and MDA sampling and interdiction operations and all County, State, and Federal support will be coordinated by the IPCC under the control of the Secretary, MDE.

The AAC will designate to the IPCC the areas in which to initiate Ingestion Exposure Pathway sampling.

When the AAC recommends Ingestion Exposure Pathway sampling to the IPCC, the IPCC will deploy teams from the DHMH Office of Food and Product Health to conduct the sampling operations. The IPCC will coordinate the activities of other State and Federal agencies identified to support sampling and control operations. The affected County EOCs will be notified and continually updated on the status of sampling operations by the IPCC. If County assistance is required, the IPCC will coordinate the County sampling and control operations through the County Health Officer and/or the County CD Director. The IPCC will designate the areas in the Counties in which to obtain samples at pre-identified sites.

The AAC/IPCC will make a determination, based upon the results of the analysis of the Ingestion Exposure Pathway samples, of the need to continue Accident Assessment and Protective Actions. If Protective Actions are required, the IPCC will conduct its operations in accordance with its existing procedures. The recommendation to restrict the use of food, water, milk, and livestock feed will be determined by the IPCC and will be based on continued sampling, analysis, and the evaluation of existing restraints. If the degree of contamination does not warrant Protective Actions, the IPCC will decide whether or not to continue Ingestion Exposure Pathway sampling.

8.3 STATE RESPONSIBILITIES AND EMERGENCY RESPONSE

State agencies and their assigned responsibilities for food, water, milk, and livestock feed control operations are summarized below.

8.3.1 Maryland Emergency Management Agency

MEMA will assure overall coordination for food, water, milk, and livestock feed control operations. MEMA will notify affected Counties and contiguous states, as necessary.

8.3.2 Department of Health and Mental Hygiene

The DHMH is responsible for the analysis of food, water, milk, and livestock feed samples and will utilize the personnel and vehicles of the support agencies to accomplish its assigned tasks. The DHMH (through its sub-divisions) will ensure that all truck and dairy farms, milk processing centers, and potable water supplies are controlled to prohibit public consumption if necessary.

8.3.3 Tidal Fisheries Division, Department of Natural Resources

The Tidal Fisheries Division (TFD) of the Department of Natural Resources, under the direction of the MDE, will support in controlling the harvesting of contaminated shellfish. TFD personnel and equipment will be deployed to provide samples of shellfish and finfish for MDE analysis.

8.3.4 Maryland Department of Agriculture

The Maryland Department of Agriculture will support the MDE by prohibiting the use of land for pasture, by quarantining animals or plants, and by prohibiting the sale and distribution of contaminated food, if deemed necessary by the MDE.

8.3.5 State Highway Administration, Department of Transporation

The State Highway Administration of the Department of Transportation will, in coordination with the MDA, provide transportation of alternate feed supplies for livestock taken off pasture, if necessary.

8.3.6 Maryland Military Department/National Guard (MMD/NG)

The MMD/NG will support the MDE/DHMH in food, water, milk, and livestock feed control operations by providing sampling at military installations, as requested.

8.4 COUNTY RESPONSIBILITIES AND EMERGENCY RESPONSE

County agencies and their assigned responsibilities for food, water, milk, and livestock feed control operations are summarized below.

8.4.1 County Emergency Management (EM)

The County EM Director will coordinate the County agencies in the sampling and control of food, water, milk, and livestock feed supplies within the County.

8.4.2 County Health Department

The Health Officer will direct County Health Department operations in the sampling and control of food, water, milk, and livestock feed supplies. The Ingestion Pathway Coordinating Committee (IPCC) will identify sectors in which sampling is to be initiated and type(s) of samples required. The IPCC will coordinate with the Health Officer to provide equipment and transportation for samples to be analyzed as available. If control of food stuffs becomes necessary, the County Health Department will assist the State Department of Health and Mental Hygiene in the restriction of these products from the public market or until it has been determined that they are safe for consumption.

8.5 FEDERAL RESPONSIBILITIES AND EMERGENCY RESPONSE

Federal response to be provided by the Federal Radiological Monitoring and Assessment Plan (FRMAP) and Federal Radiological Emergency Response Plan (FRERP) is summarized in Section 7.4.1 and Attachments 9-6 and 9-8.

ATTACHMENT 9-1, SUPPORTING DOCUMENTS LISTING

Calvert Cliffs Nuclear Power Plant Emergency Response Plan

Evacuation Time Estimates Within the Plume Exposure Pathway Emergency Planning Zone for the Calvert Cliffs Nuclear Power Plant

Peach Bottom Atomic Power Station Emergency Plan

Evacuation Time Estimates within the Plume Exposure Pathway Emergency Planning Zone for the Peach Bottom Atomic Power Station

Calvert County Emergency Operations Plan

Cecil County Emergency Operations Plan

Dorchester County Emergency Operations Plan

Harford County Emergency Operations Plan

St. Mary's County Emergency Operations Plan

MEMA Standard Operating Procedures

NUREG-0654/REP Cross-reference Listing

NUREG-0654/SOP Cross-reference Listing

ATTACHMENT 9-2

PLANNING REQUIREMENTS FOR STATE AND COUNTY STANDARD OPERATING PROCEDURES

State and County agencies having responsibilities in Annex Q are responsible for developing and maintaining Standard Operating Procedures (SOPs). In addition to the planning requirements provided in NUREG-0654/FEMA-REP-1, the Maryland Emergency Management Agency (MEMA) has established the following requirements.

1. Standard Operating Procedures at the State and local levels must be consistent at all times with Annex Q. They must provide detailed information and procedures on how assigned responsibilities and function will be performed by key and support organizations. In many cases, delineation of long-established procedures may not be practical. In such instances, the SOPs must refer to appropriate documents where those procedures may be found.

2. When one or more organizations are integrated into a key/support role with respect to a particular system, such as communications with field monitoring teams, the Standard Operating Procedures of all such organizations must spell out in detail how that system will operate. A single document agreed to by all organizations involved may be produced and referred to in separate SOPs so long as the SOPs and the document are not contradictory.

3. Any support organization at the State or local level must provide specific details in its Standard Operating Procedures on the manner in which that support is organized and how it will be rendered.

4. All key and support organizations at the State or local level must include in their Standard Operating Procedures specific details on protective measures that are mandatory for their emergency workers who may enter or be in controlled areas.

These procedures must include, as a minimum, the distribution of the following:

a. At least one self-reading dosimeters per emergency worker (one low range, 0-500 mR; or one mid-range, 0-20R, or commensurate with expected exposure rates). Self-reading dosimeters may be shared by emergency workers on different shifts.

b. At least one thermoluminescent dosimeter (TLD) per emergency worker.

c. A radiation exposure record per emergency worker.

d. A two-way radio whereby an emergency worker or team may be contacted at all times.

e. Protective clothing (coveralls, boots, gloves, etc.), if required.

In addition, these procedures must provide in detail the following:

a. Prior to departure on a mission, each emergency worker will:

1. Be provided with an update on the status of the accident;

2. Be provided with Potassium Iodide (KI) in accordance with the policy established by the MDE; and

3. Be informed of acceptable levels or radiation exposure, procedures and frequency for reading dosimeters, where to report after the mission is completed, and what may be required if decontamination of the worker or equipment is necessary.

b. During the conduct of the mission:

1. How each emergency worker or team will be provided updates on the accident status and any special protective actions.

c. At the conclusion of the mission:

1. The monitoring of each emergency worker, equipment, and vehicles used and what will be required if decontamination is necessary; and

2. Determination if each emergency worker has exceeded his or her allowable exposure, and whether or not each has any remaining "stay time" in controlled areas.

The procedures must indicate who is in charge and next in command, the location where emergency workers are to report before and after a mission, and have records and dosimetry equipment are provided to those locations. In addition, procedures must provide for checking emergency workers or Access Control Points so that those who do not have all the equipment listed above may be turned back.

ATTACHMENT 9-3

LETTERS OF AGREEMENT

LETTERS OF AGREEMENT ARE MAINTAINED ON FILE WITH THE MARYLAND EMERGENCY MANAGEMENT AGENCY.

ATTACHMENT 9-4.1, INITIAL ACCIDENT REPORT

CALVERT CLIFFS INITIAL NOTIFICATION

ATTACHMENT 3

I. COMMUNICATOR INSTRUCTIONS:

A. COMPLETE items 1 through 12 for initial notification; emergency class upgrading and downgrading

1	THIS IS/IS NOT AN EXERCISE (circle one)
2	Name of Caller:
3	Title/Organization: Constellation Energy
4	Facility: CALVERT CLIFFS
5	Emergency Class: ( ) None ( ) Unusual Event ( ) Alert ( ) Site Area Emergency ( ) General Emergency
6	Time Declared: Date:
7	Nature of Incident: Enter EAL Code (_____) Circle EAL Number N/A 1 2 3 4 5 6
8	Radioactivity ( ) Has Not Been Released ( ) Is Being Released ( ) From the Plant ( ) In the Plant ( ) Has Been Released ( ) From the Plant ( ) In the Plant
9	Type of Release ( ) None ( ) Airborne ( ) Waterborne ( ) Surface Spill
10	Population Affected ( ) None ( ) Yes
11	Protective Action Recommended: ( ) None ( ) Shelter entire 10 mile EPZ ( ) Evacuate protection action zone 1 and ( ) unless conditions make evacuation dangerous and shelter remainder of 10 mile EPZ
12	This is/is not an exercise (circle one)

B. Signature of Person Receiving Report_____ Date/Time_____

C. Person Notified of the Incident_____ Date/Time_____

ATTACHMENT 9-4.2, INITIAL ACCIDENT REPORT

PEACH BOTTOM NUCLEAR POWER PLANT

INITIAL EMERGENCY NOTIFICATION REPORT

☐ THIS IS A DRILL ☐ THIS IS NOT A DRILL

1. THIS IS_____ AT_____

   MY TELEPHONE NUMBER IS_____ THE TIME IS_____

2. EMERGENCY CLASSIFICATION:
   ☐ Unusual Event ☐ Site Area Emergency ☐ General Emergency
   ☐ Alert ☐ The Event has been Terminated

UNIT_____ TIME_____ DATE_____

THIS REPRESENTS A/AN ☐ Escalation } IN CLASSIFICATION
☐ Reduction } STATUS
☐ No Change }

3. BREIF NON-TECHNICAL DESCRIPTION OF THE EVENT:

_____
_____
_____

4. THERE IS ☐ NO }
☐ AN AIRBORNE } NON-ROUTINE RADIOLOGICAL
☐ A LIQUID } RELEASE IN PROGRESS

5. WHEN GENERAL EMERGENCY IS THE INITIAL EVENT, PROVIDE PROTECTIVE ACTION RECOMMENDATIONS BELOW:

_____
_____
_____

6. Wind Direction is From_____ Wind Speed is_____

☐ THIS IS A DRILL ☐ THIS IS NOT A DRILL

Signature of Person Receiving Report_____ Date/Time_____

Person Notified of the Incident_____ Date/Time_____

ATTACHMENT 9-4.3,

This page intentionally left blank

ATTACHMENT 9-5.1, HOSPITALS CAPABLE OF RECEIVING RADIOACTIVELY CONTAMINATED PATIENTS

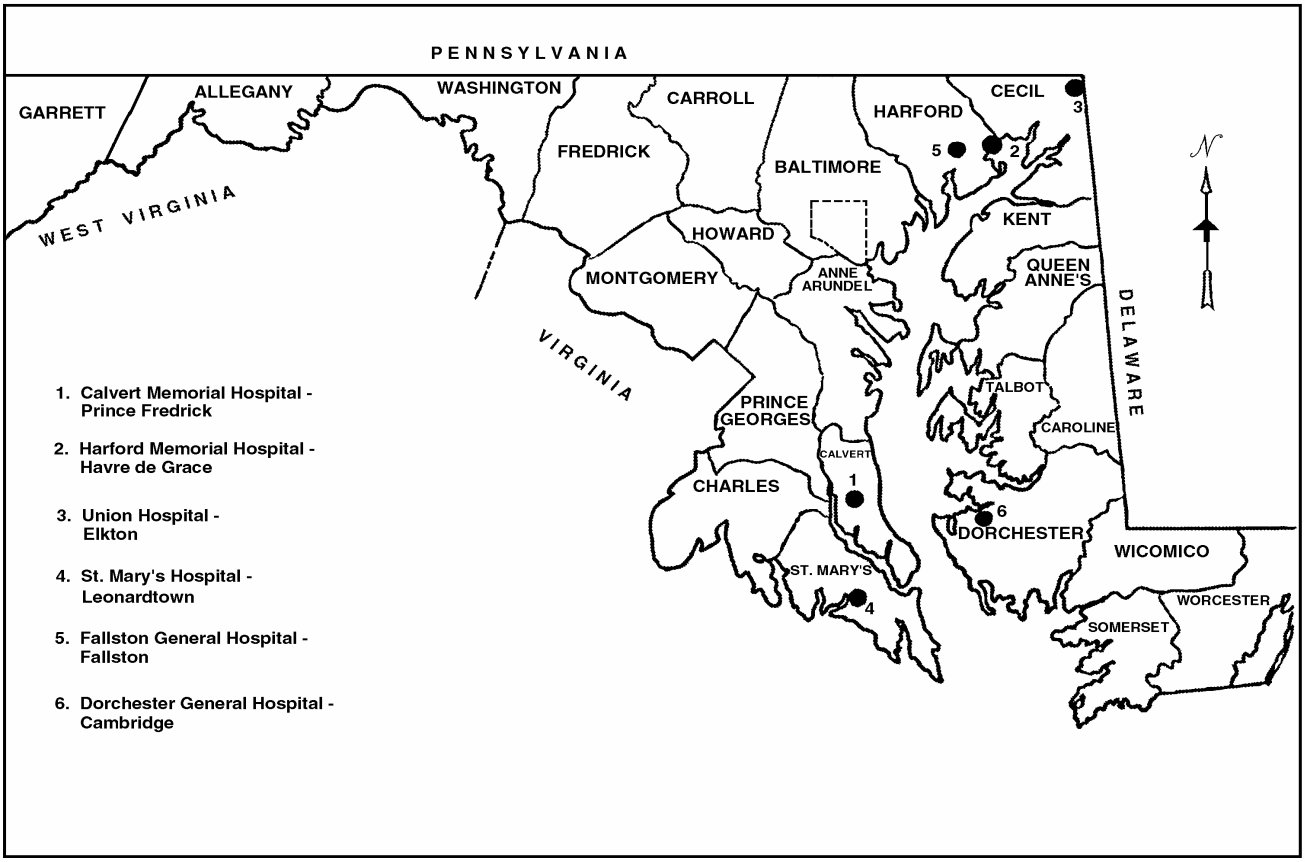

ATTACHMENT 9-6

FEDERAL RADIOLOGICAL MONITORING AND ASSESSMENT PLAN

I. INTRODUCTION

This attachment summarizes the Federal Radiological Monitoring and Assessment Plan (FRMAP) capabilities that can be provided to the State of Maryland.

The signatory Federal agencies that currently form the FRMAP are:

Department of Agriculture
Department of Commerce
Department of Defense
Department of Energy
Department of Health and Human Services
Department of Interior
Department of Labor
Department of Transportation
Environmental Protection Agency
Federal Emergency Management Agency
Interstate Commerce Commission
National Aeronautics and Space Administration
Nuclear Regulatory Commission
Postal Service

II. FRMAP REGION I SPECIFIC CAPABILITIES

The Department of Energy maintains the Radiological Assistance Program administered by the Brookhaven National Laboratory in Region I. The RAP program includes emergency radiological response teams which are made available by FRMAP to any accident location. A number of specialized monitoring instruments are available to aid in the rapid assessment and mitigation of major nuclear accident consequences. The personnel involved with these response have routine radiological related duties on a daily basis at leading nuclear facilities thereby ensuring not only continuing experience and training, but also providing capability for maintenance and calibration of state-of-the-art instrumentation.

The FRMAP provides for monitoring and assessment only. Although this is a Federal program with broad expertise, it will not assume the decision making responsibility for the State of Maryland in protection of the health and welfare of its citizens. Maryland would request FRMAP assistance only if the MDE Radiological Health Program concluded that their own radiological resources needed augmentation. If requested, a FRMAP representative from the Brookhaven Area Operations Office will report to the Accident Assessment Center to assist in accident assessment and radiological exposure functions. In the event of activation of a FRMAC, this person will communicate with the state liaison stationed at the FRMAC as well.

The Brookhaven Area Office can provide support to the State of Maryland to accomplish the following goals:

- Alpha, beta, gamma and neutron radiation surveys.
- Radiological monitoring of air, food, water, milk, and personnel.
- Spectrometry and isotopic radionuclide identification.
- Airborne radioiodine sampling and analysis to concentrations $<10^{-7}$ microcuries per-cubic centimeter.
- Radiological control advice and guidance.
- Medical advice with respect to accidents involving contaminated persons.
- Decontamination of personnel and equipment.
- Laboratory analytical services.
- Mobile laboratory capability.
- Additional support by other government laboratories and DOE contractors (i.e., Bettis, Knolls, Argonne and Oak Ridge).
- Communications support.

III. OTHER FRMAP CAPABILITIES

In addition to the capabilities of RAP,, other DOE agencies and contractors provide radiological monitoring and assessment support, and are available upon request by RAP or FRMAC. The organizations include:

A. The Nuclear Emergency Search Team (NEST) - A DOE team of scientists, engineers and technicians that are trained and organized to provide rapid technical assistance in locating nuclear weapons or materials.

B. Aerial Measurement Systems (AMS) - Provides fixed wing and helicopters equipped with radiological monitoring instrumentation to locate and track airborne and ground deposited radioactive materials. Information collected is provided to the Data and Assessment Group at FRMAC for organization, evaluation, interpretation and distribution to appropriate emergency management centers or agencies.

C. Atmospheric Release Advisory Capability (ARAC) - Provides predictive capability y based on the Weather Information Display System (WINDS), information on local conditions, and monitoring data generated by FRMAC agencies to predict plume concentrations, ground deposition and potential doses to individual resulting from releases of radioactive materials. This group also contributes to FRMAC monitoring plans to increase efficiency of data collection. Information obtained by the Group is provided to the Data and Assessment Group at FRMAC.

D. Other Support - The Nevada Operations office provides communications and logistic support via EG&G to FRMAC.

IV. COMMUNICATIONS

An extensive communications system is deployed with the special team. A memorandum of understanding between DOE and AT&T assures rapid telephone response for the communications system connection. The switching hardware for a twelve line telephone system and radios for HF and VHF transmissions are installed in an airline cargo pod. In addition, the system contains a portable microwave system to provide video, data, audio, telephone, and control communication between a field command post and an incident site which may be up to 50 miles apart. Telephone with HF backup is the primary longer distance communication system. On-scene communication is assured with VHF radio, repeaters and pagers.

Included in the communication array are all the basic support elements to establish a field command post. This includes typewriters, telecopiers, copy machines, status boards, etc.

All of the equipment and systems described above are packaged for deployment within two hours of a request. Existing airlift agreements between DOE and the Military Airlift Command assure rapid response. Most of the equipment can also be flown on commercial widebody aircraft and trucked the final distance to a site if time so dictates.

V. RESPONSE PIAN

The special response team is organized to deploy most rapidly those personnel and equipment that are immediately required. As the situation changes, equipment and personnel can be added as needed up to the full extent of FRMAP's capabilities.

ATTACHMENT 9-7

DEPARTMENT OF ENERGY RADIOLOGICAL ASSISTANCE PROGRAM

I. INTRODUCTION

This attachment summarizes the Radiological Assistance Program (RAP) of the U. S. Department of Energy (DOE). The RAP can provide emergency advice and assistance to the State of Maryland in the event of a radiological incident. The RAP and FRMAP are similar in concept but FRMAP involves a multi-agency Federal response with FEMA's coordination and the RAP is solely DOE's response from its regional office and their contractors. DOE's Brookhaven Area Office is responsible for DOE's Region I, which includes Maryland, and provides a 24-hour per day reporting and response capability.

II. SPECIFIC CAPABILITIES

The RAP supplies specialized expertise and/or equipment support to state and local agencies during major emergencies or smaller scale unusual incidents. The RAP objective is to supply emergency support and not recovery support such as decontamination activities.

In principle, RAP will respond to direct requests from private individuals, industrial users of radioactivity, or law enforcement agencies. In practice, its response will be closely coordinated with the Maryland Department of the Environment - Radiological Health Program, as well as with other concerned local, state and federal agencies.

RAP draw upon trained and experienced Brookhaven Area Office and Brookhaven National Laboratory personnel with specialized competence within the areas of health physics, reactor safety, fire protection, public information and medicine. Selection of team personnel is based on the type and extent of an incident. RAP team response time to the Maryland area is estimated to be 2 1/2 to 3 hours.

III. RESPONSE EOUIPMENT

Several dedicated emergency equipment kits and additional "state of the art" equipment items are located at Brookhaven National Laboratory. Most of the equipment is packaged in portable kits. These kits contain such gear as portable survey instruments, air samplers, grass and soil samplings tools, protective clothing and miscellaneous items, such as rope, tape, warning signs, calculator, and record books. The RAP dedicated equipment also provides several unusual, sophisticated items. These include two FIDLER (Field Instruments for Detection of Low Energy Radiation) kits, a portable Multi-Channel Analyzer, a portable Pressurized Ion Chamber Radiation Monitor, five portable field iodine air samplers and a portable generator.

ATTACHMENT 9-8

FEDERAL RADIOLOGICAL EMERGENCY RESPONSE PLAN

I. INTRODUCTION

This attachment summarizes the Federal Radiological Emergency Response Plan (FRERP) capabilities that can be provided to the State of Maryland. The FRERP includes the Federal Radiological Emergency Response Plan (FRERP) is to establish an organized and integrated capability for timely, coordinated response by Federal agencies to peacetime radiological emergencies.

The FRERP:

1. Provides the Federal Government's concept of operations based on specific authorities for responding to radiological emergencies.

2. Outlines Federal policies and planning considerations on which the concept of operations of this plan and Federal agency specific response plans are based; and

3. Specifies authorities and responsibilities of each Federal agency that may have a significant role in such emergencies.

There are two Sections in this Plan. Section I contains background, considerations, and scope. Section II describes the concept of operations for response.

II. PARTICIPATING FEDERAL AGENCIES

Each participating agency has responsibilities and/or capabilities that pertain to various types of radiological emergencies. The following Federal agencies participate in the FRERP.

1. Department of Agriculture (USDA),
2. Department of Commerce (DOC),
3. Department of Defense (DOD),
4. Department of Energy (DOE),
5. Department of Health and Human Services (HHS),
6. Department of Housing and Urban Development (HUD),
7. Department of Interior (DOI),
8. Department of Justice (DOJ),
9. Department of State (DOS),
10. Department of Transportation (DOT),
11. Department of Veterans Affairs (VA),
12. Environmental Protection Agency (EPA),
13. Federal Emergency Management Agency (FEMA),
14. General Services Administration (GSA),
15. National Aeronautics and Space Administration (NASA),

16. National Communications System (NCS), and
17. Nuclear Regulatory Commission (NRC).]

III. SCOPE

The FRERP covers any peacetime radiological emergency that has actual, potential, or perceived radiological consequences within the United States, its Territories, possessions, or territorial waters and that could require a response by the Federal Government. The level of the Federal response to a specific emergency will be based on the type and/or amount of radioactive material involved, the location of the emergency, the impact on or the potential for impact on the public and environment, and the size of the affected area. Emergencies occurring at a fixed nuclear facility or during the transportation of radioactive materials, including nuclear weapons, fall within the scope of the Plan regardless of whether the facility or radioactive materials are publicly or privately owned, federally regulated, regulated by an Agreement State or not regulated at all. (Under the Atomic Energy Act of 1954 [Subsection 274.b], the NRC has relinquished the certain States its regulatory authority for licensing the use of source, byproduct, and small quantities of special nuclear material).

IV. PLAN CONSIDERATIONS

1. Public and Private Sector Response

For an emergency at a fixed nuclear facility or a facility not under the control of a Federal agency, State and local governments have primary responsibility for determining and implementing measures to protect life, property, and the environment in areas outside the facility boundaries. The owner or operator of a nuclear facility has primary responsibility for actions within the boundaries of that facility, for providing notification and advice to offsite officials, and for minimizing the radiological hazard to the public.

For emergencies involving an area under Federal control, the responsibility for onsite actions belongs to a Federal agency, while offsite actions are the responsibility of the State or local government.

For all other emergencies, the State or local government has the responsibility for taking emergency actions both onsite and offsite, with support provided, upon request, by Federal agencies as designated in Section II of this plan.

2. Coordination by Federal Agencies

This plan describes how the Federal response to a radiological emergency will be organized. It includes guidelines for notification of Federal agencies and States, coordination and leadership of Federal response activities on scene, and coordination of Federal public information activities and congressional relations by Federal agencies. The Plan suggests ways in which the State, local, and Federal agencies can most effectively integrate their actions. The degree to which the Federal response is merged or to which activities are adjusted will be based upon the requirements and priorities set by the State.

Appropriate independent emergency actions may be taken by the participating Federal agencies within the limit of their own statutory authority to protect the public, minimize immediate hazards, and gather information about the emergency that might be lost by delay.

3. **Federal Agency Authorities**

Some Federal agencies have authority to respond to certain situations affecting public health and safety with or without a State request. Appendix C of this Plan cites relevant legislative and executive authorities. This plan does not create any new authorities nor change any existing ones.

A response to a radiological emergency on or affecting Federal lands not occupied by the government agency should be coordinated with the agency responsible for managing that land to ensure that response activities are consistent with Federal statutes governing the use and occupancy of these lands. This coordination is necessary in the case of Native American tribal lands, because federally recognized tribes have a special relationship with the U.S. Government, and the State and local governments may have limited or no authority on their reservations.

In the event of an offsite radiological accident involving a nuclear weapon, special nuclear material, classified components, or all three, the owner (DOD, DOE, or NASA) will declare a National Defense Area (NDA) or National Security Area (NSA), respectively, and this area will become "onsite" for the purposes of this plan. NDAs and NSAs are established to safeguard classified information and/or restricted data or equipment or material. Establishment of these areas places non-Federal lands under Federal control and results only from an emergency event. It is possible that radioactiive contamination would extend beyond the boundaries of these areas.

In accordance with appropriate national security classification directives, information may be classified concerning nuclear weapons, special nuclear materials at reactors, and certain fuel cycle facilities producing military fuel.

4. **Federal Agency Resource Commitments**

Agencies commiting resources under this Plan do so with the understanding that the duration of the commitment will depend on the nature and extent of the emergency and the State and local resources available. Should another emergency occur that is more serious or of higher priority (such as one that may jeopardize national security), Federal agencies will reassess resources committed under this Plan.

5. **Requests for Federal Assistance**

State and local government requests for assistance, as well as those from owners and operators of radiological facilities or activities, may be made directly to the Federal agencies listed in Table II-1, FEMA, or to other Federal agencies with which they have preexisting arrangements or relationships.

6. **Reimbursement**

The cost of each Federal agency's participation in support of the FRERP is the responsibility of that agency, unless other agreements or reimbursement mechanisms exist. GSA will be reimbursed for supplies and services provided under this Plan in accordance with prior interagency agreements.

V. TRAINING AND EXERCISES

Federal agencies, in conjunction with State and local governments, will periodically exercise the FRERP. Each agency will coordinate its exercises with the Federal Radiological Preparedness Coordination Committee's (FRPCC's) Subcommittee on Federal Response to avoid duplication and to invite participation by other Federal agencies.

Federal agencies will assist other Federal agencies and Sate and local governments with planning and training activities designed to improve response capabilities. Each agency should coordinate its training programs with the FRPCC's Subcommitte on Training to avoid duplication and to make its training available to other agencies.

VI. RELATIONSHIP TO THE NATIONAL RESPONSE PLAN (NRP)

1. **Without a Stafford Act Declaration**

   Federal agencies will respond to radiological emergencies using the FRERP, each agency in accordance with existing statutory authorities and funding resources. The LFA has responsibility for coordination of the overall Federal response to the emergency. FEMA is responsible for coordinating non-radiological support using the structure of the National Response Plan (NRP).

1. **With a Stafford Act Declaration**

   When a major disaster or emergency is declared under the Stafford Act and an associated radiological emergency exists, the functions and responsibilities of the FRERP remain the same. The LFA coordinates the management of the radiological response with the Federal Coordinating Officer (FCO). Although the direction of the radiological response remains the same with the LFA, the FCO has the overall responsibility for the coordination of Federal assistance in the support of State and local governments using the NRP.

VII. AUTHORITIES

The following authorities are the basis for the development of this plan:

1. Nuclear Regulatory Commission Authorization, Public Law 96-925, June 30, 1980, Section 304. This authorization requires the President to prepare and publish a "National Contingency Plan" (subsequently renamed the FRERP) to provide for expeditious, efficient, and coordinated action by appropriate Federal agencies to protect the public health and safety in case of accidents at commercial nuclear power plants.

2. Executive Order (EO) 12241, National Contingency Plan, September 29, 1980. This EO delegates to the Director of FEMA the responsibility for publishing the National Contingency Plan (i.e., the FRERP) for accidents at nuclear power facilities and requires that it be published from time to time in the Federal Register. Executive Order 12241 has been amended by Executive Order 12657, FEMA Assistance in Emergency Preparedness Planning at Commercial Nuclear Power Plant.

   Authorities for the activities of individual Federal agencies appear in Appendix C.

VIII. CONCEPT OF OPERATIONS

Notification will be received by FEMA from either MEMA or the NRC. Implementation of the FRERP should not occur unless requested by the State of Maryland, through MEMA, to augment State and County resources. The Federal response to a request for assistance can be divided into six major components that may involve as many as three lead Federal agencies at one time. These components are summarized in Table 9-1. As one of the lead agencies, FEMA is responsible for promoting coordination among the lead Federal agencies in support of State and County efforts.

The NRC, FEMA, and DOE or EPA each has a specific coordination function in relation to the State and the utility. Other Federal officials may arrive prior to arrival of the lead Federal agencies and act under their own authorities to fulfill their responsibilities. During that brief period, those agencies will coordinate their activities among themselves and with the appropriate lead Federal agency as soon as they arrive concerning the status of ongoing response efforts.

DOE, during the initial phases of the emergency, and the EPA thereafter, will assist the MDE for Radiological Health Program to help coordinate offsite radiological monitoring and assessment activities. DOE and EPA will make assessments of monitoring data and present them to the NRC for use in developing or evaluating public protective action recommendations. The Department of Health and Human Services, EPA, DOE, and the US Department of Agriculture, in coordination of the appropriate State agencies, will provide advice to the NRC, if requested, concerning possible public health impacts and associated protective measures for mitigating the impact. Finally, through the NRC, FEMA will remain informed of onsite conditions that could have an offsite impact. FEMA's overall coordination function is not intended to replace or supplant existing liaison and communication between Federal departments and agencies and their State counterparts.

TABLE 9-1

FFERP COMPONENTS

RESPONSE COMPONENT		LEAD FEDERAL AGENCY
(1)	Conduct onsite actions to support the assistance, if required.	NRC
(2)	Coordinate offsite radiological monitoring and assessment. Initial Response	DOE
	Intermediate and long-term response	EPA
(3)	Develop or evaluate recommendations for public protective action measures offsite.	NRC
(4)	Present recommendations for public protective action measures offsite.	NRC in coordination with FEMA whenever possible.
(5)	Promote coordination of Federal assistance to State and local governments, including implementation of public protective action measures offsite, if required.	FEMA
(6)	Coordinate release of information to the public and to Congress;	NRC in coordination with FEMA

INDEX

	Section Number
A	
Access Control	def. 1.2; 3.1.4; 5.4.2.4
Accident Assessment	def. 1.2; 3.1.1; 5.4.2.1
Accident Assessment Center	5.2.3
Accident Classification System	3.6
- Alert	3.6.2
- General Emergency	3.6.4
- Notification of Unusual Event	3.6.1
- Site Area Emergency	3.6.3
Air Traffic Control	3.7
Alert	3.6.2; 5.4.1.2
American Red Cross	7.3.1
C	
Command and Coordination	def. 1.2; 3.1.3' 5.4.2.3
Comptroller of the Treasury	7.1.14
Contamination Levels	3.4
(allowable)	
- Clothing, Equipment and Materials	3.4.2
- Reentry to Contamination Areas	3.4.3
- Skin	3.4.1
County Operations	7.2
- Ingestion Zone	7.2.2; 8.4
- Plume Zone	7.2.1
Critique	6.5
D	
Department of Agriculture	7.1.5; 8.3.4
Department of Housing and Community Development	7.1.11
Department of Education	7.1.10
Department of the Environment	7.1.4
Department of Health and Mental Hygiene	7.1.3; 8.3.2

D (con't)

Department of Human Resources 7.1.8

Department of Natural Resources 7.1.6

Department of Transportation 7.1.9

Drills def 1.2; 6.2
- Accident Assessment 6.2.4
- Communication 6.2.1
- Medical Emergency 6.2.2
- Radiological Monitoring 6.2.3

E

Emergency Classification 3.6

Emergency Communications 5.3

Emergency Medical Services def. 1.2; 3.1.5; 5.4.2.5; and see hospitals

Emergency Operations Center def. 1;2
- State of Maryland 5.2.1
- County 5.2.2

Emergency Operations Facility, Near-site def. 1.2; 5.2.4

Emergency Planning Zone def. 1.2; 3.2
- Ingestion Zone def. 1.2; 3.2.2
- Plume Zone def. 1.2; 3.2.1

Emergency Response Organization 5.1

Equipment Maintenance 6.7

Evacuation def. 1.2; 3.1.4; 3.3.3.1; 5.4.2.4

Exercises def. 1.2; 6.3

F

Federal Emergency Management Agency 4.4.2; 7.4.2

Federal Radiological Monitoring and Assessment Plan 4.4.1; 7.4.1; Attachment 9-6

Field Monitoring 5.4.2.1

Fire Marshal 7.1.15

Fisheries Service, DNR 7.1.6.5; 8.3.3

F (con't)

Fixed Nuclear Facilities 3.5
- Commercial 3.5.1
- Research 3.5.2

Food, Water, Milk, and Livestock Feed Control def. 1.2; 3.1.4; 5.4.2.4

G

General Emergency 3.6.4; 5.4.1.4

Governor 7.1.1

H

Hospitals Attachment 9-5

I

Implementing Procedures def. 1.2

Accident Report Form Attachment 9-4

Ingestion Zone def. 1.2; 3.1.5; 5.4.2.5
- Operations 7.2.2; Section 8

L

Law Enforcement and Crime Prevention def. 1.2; 3.1.5; 5.4.2.5

M

Maryland Emergency Management Agency 7.1.2; 8.3.1

Maryland Institute for Emergency Medical Services Systems 7.1.13

Maryland Military Department/National Guard 7.1.12; 8.3.6

Mass Transit Administration, DOT 7.1.9.2

Mass Care def. 1.2; 3.1.5; 5.4.2.5

Media Communication Center 5.2.5

Mutual Aid Agreements 4.5

N

National Guard Department — See Maryland Military /National Guard

Natural Resources Police, DNR — 7.1.6.1

Notification and Communication — 3.1.2; 5.4.2.2

Notification of Unusual Event — 3.6.1; 5.4.1.1

O

Observers — 6.1; 6.5

P

Parallel Actions — def. 1.2; 3.1.5; 5.4.2.5

Plan Maintenance — 6.6

Plume Zone — def. 1.2; 3.2.1
- County Operations — 7.2.1

Power Plant and Environmental Review Division, DNR — 7.1.6.4

Protective Actions — def. 1.2; 3.1.4; 3.3.3; 5.4.2.5
- Termination of — 3.3.4
- For Plume Exposure — 3.3.3.1

Prophylaxis — 3.3.3.1

Protective Action Guides — def. 1.2; 3.3
- Emergency PAG — 3.3.2.2.3; 3.3.3.2.2.
- For Foodstuffs and Water — 3.3.2; 3.3.3.2
- For Plume Exposure — 3.3.1
- For Prophylactic use of Potassium Iodide — 3.3.3.1
- Preventive PAG — 3.3.2.2.; 3.3.3.2.1

Public Information — 3.1.6; 5.4.2.6
- County — 3.1.6.2
- FNF — 3.1.6.1
- State (including State Public Information Officer) — 3.1.6.3

R

Radiation Exposure Control — def. 1.2; 3.1.5; 5.4.2.5

Radiological Emergency Plan
- Implementation — 5.4
- Maintenance — 6.6

Reentry — def.1.2; 3.1.5; 5.4.2.5

Research Facilities — 3.5.2

Respiratory Protection — 3.3.3.1

S

Salvation Army — 7.3.2

Sample Analysis — 5.4.2.1

Scenarios — 6.1

Scheduling — 6.8

Site Area Emergency — 3.6.3; 5.4.1.3

Special Concerns — 3.7

State Highway Administration, DOT — 7.1.9.1; 8.3.5

Standard Operating Procedures — def. 1.2; Attachment 9-2

State Police — 7.1.7

Supporting Documents Listing — Attachment 9-1

T

Take Shelter — def. 1.2; 3.1.4; 3.3.3.1; 5.4.2.4

Training — 6.4
- Emergency Worker — 6.4.1
- Public Information — 6.4.2

U

United States Coast Guard — 7.4.3

Unusual Event, Notification of — def. 1.2; 3.6.1