David H. Jones
Vice President
Engineering

Southern Nuclear
Operating Company, Inc.
40 Inverness Center Parkway
Birmingham, Alabama 35242

Tel 205.992.5984
Fax 205.992.0341

SOUTHERN COMPANY
Energy to Serve Your World℠

May 21, 2008

NL-08-0670

Docket Nos.: 50-424
50-425

U. S. Nuclear Regulatory Commission
ATTN: Document Control Desk
Washington, D. C. 20555-0001

Vogtle Electric Generating Plant
Supplemental Response to NRC Generic Letter 2004-02

Ladies and Gentlemen:

The purpose of this submittal is to provide a revised transmittal of the Southern Nuclear Operating Company (SNC) supplemental response for Vogtle Electric Generating Plant (VEGP) Units 1 and 2, to Generic Letter (GL) 2004-02, dated September 13, 2004, "Potential Impact of Debris Blockage on Emergency Recirculation During Design Basis Accidents at Pressurized-Water Reactors." The NRC had questioned the proprietary nature of some of the information provided by the sump screen vendor in the SNC dated February 28, 2008 (NL-07-1777). This letter provides the revised proprietary pages and a complete non-proprietary submittal.

Enclosure 1 contains only the revised proprietary information as defined by 10 CFR 2.390. This includes only the questions from 3.f.12, 3.h.3 and 3.h.4. In addition to the reclassification of some of the information as non-proprietary, the references to Owens Corning TIW II as a type of installed insulation and CarboZinc as a surrogate for inorganic zinc coatings have been deleted. These were erroneously included in the original supplemental response. Enclosure 2 provides a complete non-proprietary submittal. General Electric Hitachi Nuclear Energy (GEH), as the owner of the proprietary information, has executed the affidavit in Enclosure 3, which identifies that the enclosed proprietary information has been handled and classified as proprietary, is customarily held in confidence, and has been withheld from public disclosure. The proprietary information was provided to SNC in a GEH transmittal that is referenced by the affidavit. GEH hereby requests that the enclosed proprietary information be withheld from public disclosure in accordance with the provisions of 10 CFR 2.390 and 9.17. NRC Commitments are listed in Enclosure 4.

In addition, this letter is to update the NRC in that the Unit 1 downstream modifications (flow orifice installation and throttle valve adjustment) are now complete. In Enclosure 4, the commitment to revise engineering guidance to include design considerations related to GL 2004-02 is now denoted as complete.

Mr. D. H. Jones states he is a Vice President of Southern Nuclear Operating Company, is authorized to execute this oath on behalf of Southern Nuclear Operating Company and to the best of his knowledge and belief, the facts set forth in this letter are true.

This letter contains no NRC commitments. If you have any questions, please advise.

Respectfully submitted,

SOUTHERN NUCLEAR OPERATING COMPANY

D. H. Jones
Vice President – Engineering

Sworn to and subscribed before me this 21st day of May, 2008.

Notary Public

My commission expires: 9-14-10

DHJ/DWM/daj

Enclosure:
1. Vogtle Electric Generating Plant Supplemental Response to NRC Generic Letter GL 2004-02 (Proprietary) REVISED PAGES ONLY
2. Vogtle Electric Generating Plant Supplemental Response to GL 2004-02 (Non-Proprietary) COMPLETE
3. General Electric Hitachi Nuclear Energy Americas LLC, Affidavit
4. List of Regulatory Commitments

cc: Southern Nuclear Operating Company
Mr. J. T. Gasser, Executive Vice President
Mr. T. E. Tynan, Vice President – Vogtle
RType: CVC7000

U. S. Nuclear Regulatory Commission
Mr. L. A. Reyes, Regional Administrator
Mr. R. A. Jervey, NRR Project Manager – Vogtle
Mr. G. J. McCoy, Senior Resident Inspector – Vogtle

State of Georgia
Mr. N. Holcomb, Commissioner – Department of Natural Resources

Vogtle Electric Generating Plant
Supplemental Response to NRC Generic Letter 2004-02

Enclosure 2

Vogtle Electric Generating Plant Supplemental Response to
NRC GL 2004-02
(Non-Proprietary)

COMPLETE SUBMITTAL

Vogtle Electric Generating Plant
Supplemental Response to NRC Generic Letter 2004-02

Enclosure 2

Vogtle Electric Generating Plant Supplemental Response to NRC GL 2004-02 (Non-Proprietary)

Table of Contents

1.0 Overall Compliance
- 1.1 Correspondence Background

2.0 General Description of Schedule for Corrective Actions

3.0 Specific Information on Methodology
- 3.a Break Selection
- 3.b Debris Generation / Zone of Influence (ZOI)
- 3.c Debris Characteristics
- 3.d Latent Debris
- 3.e Debris Transport
- 3.f Head Loss and Vortexing
- 3.g Net Positive Suction Head (NPSH)
- 3.h Coating Evaluation
- 3.i Debris Source Term Refinements
- 3.j Screen Modification Package
- 3.k Sump Structural Analysis
- 3.l Upstream Effects
- 3.m Downstream Effects - Components and Systems
- 3.n Downstream Effects - Fuel and Vessel
- 3.o Chemical Effects
- 3.p Licensing Basis

4.0 References

Enclosure 2
Vogtle Electric Generating Plant Supplemental Response to
NRC GL 2004-02
(Non-Proprietary)

Within this enclosure, Southern Nuclear Operating Company (SNC) is providing the a response to the information requested by GL 2004-02 in accordance with the guidance provided in NRC letter dated November 21, 2007, "Revised Content Guide for Generic Letter 2004-02 Supplemental Response." Section 1.0 provides a general description of Vogtle Electric Generating Plant (VEGP) as related to this GL. Section 2.0 provides a summary description of the approach used to address the GL. Section 3.0 provided specific information on the evaluations performed for VEGP.

As part of the supplemental response, SNC is responding to the request for additional information (RAI) received in a letters dated February 9, 2006, "Vogtle Electric Generating Plant, Units 1 and 2, Request for Additional Information Re: Response To Generic Letter 2004-02, 'Potential Impact Of Debris Blockage On Emergency Recirculation During Design-Basis Accidents At Pressurized Water Reactors (TAC NOS. MC4727 AND MC4728).' "

1.0 Overall Compliance

Provide information requested in GL 2004-02, "Requested Information." Item 2(a) regarding compliance with regulations. That is, provide confirmation that the [Emergency Core Cooling System (ECCS)] ECCS and [Containment Spray System (CSS)] CSS recirculation functions under debris loading conditions are or will be in compliance with the regulatory requirements listed in the Applicable Regulatory Requirements section of this generic letter. This submittal should address the configuration of the plant that will exist once all modifications required for regulatory compliance have been made and this licensing basis has been updated to reflect the results of the analysis described above.

SNC Response to 1.0:

In the resolution of General Safety Issue (GSI) GSI-191, "Assessment of Debris Accumulation on PWR Sump Performance," VEGP implemented the following changes:

- To improve existing margins until all corrective actions can be implemented, VEGP has installed new sump strainers that will increase the available screen area from approximately 54 sq ft to 765 sq ft for each of the RHR strainers, an approximate 1400% increase, and from approximately 54 sq ft to 590 sq ft for each of the Containment Spray strainers, an approximate 1075% increase. The holes in the strainer surface were reduced to a nominal 3/32 inch from the 1/8 inch hole in the original strainers. Thus, the potential for debris passing through the strainer and causing plugging of the downstream Emergency Core Cooling System (ECCS) equipment is minimized.

- For Unit 2, orifices were installed in the Intermediate and High Head ECCS lines and the associated throttle valves were adjusted to ensure that adequate clearance in the valve will prevent debris from plugging. These changes are to be made on Unit 1 in the spring of 2008 as documented in extension request approval issued by the NRC on September 7, 2006 (reference 16).
- Procedural and program controls are in place to ensure materials used in the containments will not result in an increase of the debris loading beyond the analyzed values. This includes controls for containment coatings, labels and insulation.
- Extensive analysis has been performed in accordance with NEI 04-07 (reference 2), the associated NRC Safety Evaluation (SE) (reference 3) along with other industry documents that were reviewed by the NRC**.** With few exceptions, VEGP followed this guidance. In the few cases that other approaches were utilized, technical justification is available.

Some of the conservatisms in the VEGP approach are discusses below:

- No credit for leak-before-break was taken in the VEGP sump analysis scenario.
- Per WCAP-16710-P Rev. 0 (reference 24), testing clearly demonstrates the acceptability of reducing the ZOI associated with the NUKON from a spherical-equivalent ZOI of 17.0 D to a value of 5.0 D. A conservative NUKON ZOI of 8.0 D has been utilized in calculating the VEGP debris generation. The NUKON calculated to transport to the strainers for an 8.0 D ZOI is twice that which would reach the strainers for a 5.0 D ZOI. Testing indicates that the head loss would decrease about 75% if the NUKON assumed for an 8.0 D ZOI is reduced by 50%.
- A single pump failure is assumed for CSS and RHR such that all debris is assumed to accumulate on a single train of screens. If both trains of RHR and CS are in service the debris load to an individual screen will decrease by 50%. Testing indicates that a 50% reduction in the debris load will decrease the head loss by about 75%.
- All insulation debris, coatings and foreign material generated is conservatively placed on the floor immediately.
- Conservatively, no inactive pools are credited at VEGP. All debris on the floor prior to pool fill-up remains on the floor in the active pool after pool fill-up.

- All unqualified coatings are assumed to fail as particulate and transport to the strainers. In reality, all the unqualified coatings would not fail. In addition, some of the unqualified coatings which fail would be chips instead of particulate and thus would not transport to the strainers. The unqualified coating debris volume is based on 15,000 square feet of unqualified coating area. This value includes sufficient margin to allow future increase in unqualified coating area at both units without necessitating reanalysis of sump strainer design margin.
- To prevent the potential for plugging and creating a hold-up volume, the refueling cavity drain covers are removed during modes requiring ECCS operability. This assures that water which is routed into the refueling cavity will drain into the ECCS sump, thus increasing sump level.
- VEGP does not credit containment pressure above pre-accident pressure for Net Positive Suction Head available (NPSHa) calculations.
- Screen head loss testing was performed under highly stirred conditions, which to the extent practicable, prevented settling of debris in the vicinity of the strainers.
- Non-qualified containment labels are assumed to detach and transport to the containment sump. In reality, many of these labels are tightly adhered or are protected from direct containment spray. Even in the event of detachment, many of these labels would not be transported to the sump strainers due to torturous paths between the label and the strainers. In addition, the amount of labels assumed in the strainer head loss tests was increased by a factor of two above the inventoried values. This additional area is intended to address any incidental debris that may be located in the containment.
- The containment sump level calculations were performed using maximum reduction in RWST mass due to instrument uncertainty. In addition, the switchover is assumed to occur instantaneously at the RWST alarm setpoints which has the effect of reducing calculated sump level. In reality, there is some time required for the operator to manually perform the switchover from injection to recirculation mode.
- The latent debris value assumed for screen hydraulic head loss testing corresponds to approximately a 100% higher value than was measured.

1.1 Correspondence Background

The following provides a condensed listing of the correspondence issued by the NRC or submitted by SNC for VEGP, on the subject of General Safety Issue (GSI) GSI-191, "Assessment of Debris Accumulation on

PWR Sump Performance." The title of each letter is provided in the reference section of this enclosure.

The NRC issued Bulletin 2003-01 on June 9, 2003 (reference 5) asking for a 60 day response providing a description of any interim compensatory measures that have been implemented, or that will be implemented, to reduce the risk which may be associated with potentially degraded or nonconforming ECCS and CSS recirculation functions until an evaluation to determine compliance is complete. SNC provide the 60 day response in a letter dated August 7, 2003 (reference 6). Supplemental letters dated October 29, 2004 (reference 7), and July 22, 2005 (reference 8) were provided by SNC in response to requests for additional information.

The NRC issued Generic Letter (GL) 2004-02 on September 13, 2004 (reference 1). In this letter, the NRC asked for an initial 90 day response, a 12 month response and for the guidance of the GL to be met by December 31, 2007. In December 2004, NEI issued NEI 04-07 (reference 2) providing an evaluation methodology for the industry. The NRC letter dated December 6, 2004 (reference 3) provided the safety evaluation for NEI 04-07. The NRC had already issued RG 1.82 Rev 3 (reference 25) in November 2003.

SNC provided the initial response for VEGP in a letter dated February 25, 2005 (reference 10). SNC provided a follow-up response on August 31, 2005 (reference 11) providing more details on how SNC would meet the GL guidance.

The NRC issued a request for additional information on February 9, 2006 (reference 12) with a 60 day response time. NEI worked with the NRC and recognized that much of the information needed to address the RAIs would not be available until ongoing testing activities were completed. The NRC issued letter dated March 28, 2006 (reference 13) identified that the RAI answers could be provided as part of the supplemental response by the end of December 2007. NRC letter dated January 4, 2007 (reference 18) provided clarification that even if a licensee had an extension for modifications past 2007, the supplemental response was still due by December 31, 2007.

SNC submitted an extension request in a letter dated June 22, 2006 (reference 14) for modification/installation of the Unit 1 ECCS flow orifices. This request was approved in NRC letter dated September 7, 2006 (reference 16).

NRC letter dated August 15, 2007 issued the content guide for GL 2004-02 supplemental response due in December 2007. Additional information was provided by the NRC in letter dated September 27, 2007 for chemical effects, protective coatings, and head loss testing. A revision to the content guide was issued by the NRC in letter dated November 21, 2007. The due date for the supplemental response was extended by NRC letter dated November 30, 2007 to allow the supplemental response to be submitted by February 29, 2008. NRC letter dated November 8, 2007 provided guidance for requesting plant specific extensions. Additional

information was provided in NRC letter dated November 13, 2007 on how GSI-191 would be closed and how the closure would be documented for each site.

SNC letter dated December 7, 2007 (reference 19), requested an extension for submittal of Chemical Effects testing results, Downstream effects – Components and Systems, and Downstream Effects – Fuel and Vessel until June 30, 2008. An extension was approved until June 30, 2008 in NRC letter dated December 19, 2007 (reference 20).

2.0 General Description of Schedule for Corrective Actions

A general description of and implementation schedule for all corrective actions, including any plant modifications that you identified while responding to this generic letter. Efforts to implement the identified actions should be initiated no later than the first refueling outage starting after April 1, 2006. All actions should be completed by December 31, 2007. Provide justification for not implementing the identified actions during the first refueling outage starting after April 1, 2006. If all corrective actions will not be completed by December 31, 2007, describe how the regulatory requirements discussed in the Applicable Regulatory Requirements section will be met until the corrective actions are completed.

SNC Response to 2.0:

SNC has performed analysis to determine the susceptibility of the ECCS and CSS recirculation functions for VEGP to the adverse effects of post-accident debris blockage and operation with debris-laden fluids. These analyses conform to the greatest extent practicable to the NEI 04-07 methodology (reference 2) as approved by the NRC safety evaluation report dated December 6, 2004 (reference 3). As of February 29, 2008, SNC has completed the following Generic Letter 2004-02 actions, analyses and modifications:

- NEI 02-01, "Condition Assessment Guidelines: Debris Sources Inside PWR Containment"
- Latent Debris Walkdowns
- Debris Generation Analysis
- Containment Debris Transport Analysis (includes CFD model)
- Head Loss Analysis
- Hydraulic Model of the ECCS System
- CS and RHR Net Positive Suction Head Analysis
- Vendor's Strainer Head Loss Testing (awaiting chemical effects testing)

- Bypass Testing
- Downstream Wear and Blockage Analysis to June 2005 revision of WCAP-16406-P
- Detailed Structural Analysis of New Strainers
- ECCS & CS Sump Strainers Replacement Modification Installed
- ECCS Flow Orifice Modification/Installation on VEGP Unit 2.

SNC requested (reference 14) and received approval (reference 16) for an extension until spring 2008 to complete the installation and testing of Unit 1 ECCS flow orifices.

SNC requested (reference 19) and received approval (reference 20) for an extension until May 31, 2008 to complete Chemical Effects testing, evaluation of the Downstream Effects for Components and Systems, and Downstream Effects for Fuel and Vessel.

3.0 Specific Information on Methodology

3.a Break Selection

2) Describe and provide the basis for the break selection criteria used in the evaluation.

SNC Response to 3.a.1:

Eight breaks were investigated at VEGP. Two breaks are located on the intermediate leg of the primary piping, which has the largest diameter of the primary piping with a 31” inner diameter. Two breaks are located on the hot leg of the primary piping, which has the next largest diameter of the primary piping with a 29” inner diameter. Two breaks are located on the cold leg of the primary piping, which has the smallest diameter of the primary piping with a 27.5” inner diameter. Another break is located on the pressurizer surge line near the pressurizer, which is located outside the bioshield wall. The final break is at the same location as one of the hot leg breaks (at the connection of the pressurizer surge line and the loop 4 hot leg). In accordance with the alternate break methodology, it is considered to have an inner diameter of 12.812”.

The locations of the analyzed breaks are chosen in order to maximize the amount and types of debris generated. To this end, breaks are placed near large equipment, specifically the steam generators and pressurizer, and also near walls and the floor. Finally, breaks were located in areas expected to maximize the transport of debris to the sump strainer.

Secondary pipe breaks were not considered for this analysis. Based upon a review of the plant UFSAR and EOPs discussed in the Debris Generation calculation, containment spray and recirculation are not required for a Main Steam Line Break or a Feedwater Line Break. Additionally, breaks of small lines are not investigated, because they are not bounding.

2) State whether secondary line breaks were considered in the evaluation (e.g., main steam and feedwater lines) and briefly explain why or why not.

SNC Response to 3.a.2:

Secondary pipe breaks were not considered for this analysis. Based upon a review of the plant UFSAR and EOPs discussed in the Debris Generation calculation, containment spray and recirculation are not required for a Main Steam Line Break or a Feedwater Line Break.

3) Discuss the basis for reaching the conclusion that the break size(s) and locations chosen present the greatest challenge to post-accident sump performance.

SNC Response to 3.a.3:

The locations of the analyzed breaks are chosen in order to maximize the amount and types of debris generated. To this end, breaks are placed near large equipment, specifically the steam generators and pressurizer, and also near walls and the floor. Finally, breaks were located in areas expected to maximize the transport of debris to the sump strainer.

Alternate Methodology

For the alternate methodology, the selection of the break size and location in Region I is much simpler. The break size for Region I under the alternate break evaluation is defined as either:

A complete guillotine break of the largest line connected to the RCS piping (16” Sch.160 pressurizer surge line 1201-053-16").

OR

A main loop line break equivalent to a guillotine break of a 14” Schedule 160 pipe.

As the pressurizer surge line is a 16” Sch. 160 (12.812” ID) line, this is the size evaluated for the alternate break. For this break, according to the methodology, a double-ended guillotine break is modeled. The

location of the break is at the pressurizer surge line connection to the loop 4 hot leg. For Region II of the alternate methodology, the debris quantities are the same as for the deterministic methodology.

Figure 3.a.3-1 Postulated Break Locations

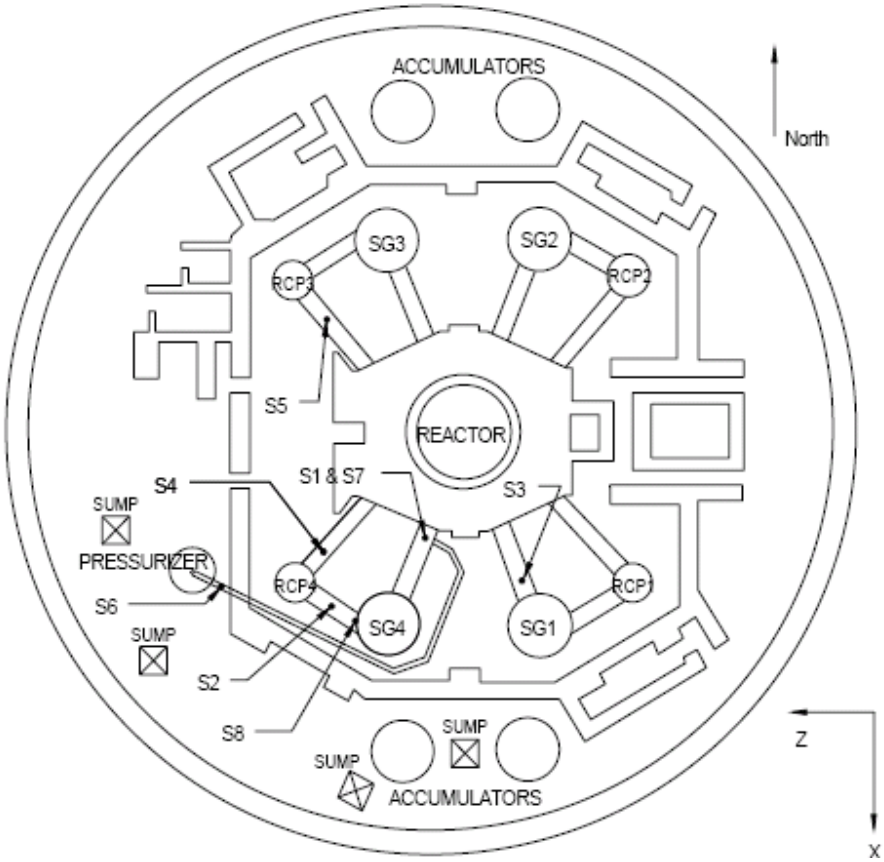

3.b Debris Generation / Zone of Influence (ZOI)

1) Describe the methodology used to determine the ZOIs for generating debris. Identify which debris analyses used approved methodology default values. For debris with ZOIs not defined in the guidance report (GR)/safety evaluation (SE), or if using other than default values, discuss method(s) used to determine ZOI and the basis for each.

SNC Response to 3.b.1:

In order to perform the calculation of debris generation within containment, a representative model of the insulation location and volume is utilized. The model is a Microsoft Excel® spreadsheet created from piping isometric drawings and insulation drawings. The

spreadsheet determines the amount of insulation within a ZOI centered at coordinates that are input by the user. In this way, several breaks are able to be evaluated relatively quickly and the user can ensure that conservative and limiting breaks are chosen.

The insulation in containment at VEGP consists of Nukon Fiber. The amount of Nukon debris generated is dependent on the proximity of each insulated target to the postulated break. The SER (reference 3) recommends a ZOI radius of 17.0 D ("D" being the inside diameter of the pipe break) for both jacketed and unjacketed Nukon Fiber. Based on industry testing contained in Westinghouse WCAP-16710-P, a reduced ZOI of 8.0 D is used for the VEGP debris generation analysis.

Coatings on steel, concrete and equipment in containment were also evaluated. Qualified coatings were evaluated for a 4.0 D ZOI based upon the results of testing presented in WCAP-16568-P (reference 23). Unqualified coatings are all considered to be debris, as recommended by the guidance documents (references 2 and 3). Further discussion of coatings is contained in Section 3h of this response submittal.

As discussed in Section 3d of this response submittal, latent debris and miscellaneous (foreign) materials are also included in the debris generation analysis. The amounts of these types of debris were determined from plant walkdown reports and are presented in their respective section of this response.

Critical electrical components in containment are shielded by fire retardant material. This fire barrier may become debris if subjected to jet impingement during a LOCA. The maximum amount of potential fire barrier debris was calculated and included for all breaks except for break S6. Break S6 is located outside the bioshield in a location that would shield any fire barrier targets from its break jet.

2) Provide destruction ZOIs and the basis for the ZOIs for each applicable debris constituent.

SNC Response to 3.b.2:

A ZOI of 8.0 D is used for jacketed Nukon insulation at VEGP, based on test data from WCAP-16710-P (reference 24). The applicability of this data is discussed in section 3.b.3 of this response. For this ZOI, the suggested Nukon size distribution contained in Table 3-3 of the SER (reference 3) is not applicable. Instead, the size distribution is determined from Figure II-1 of the SER, which relates jet pressure to ZOI radii, and Figure II-2 of the SER, which relates jet pressure to the fraction of small debris generated. The data presented in Figure II-2 comes from the Air Jet Impact tests, which are discussed in many

documents related to GSI-191 including NUREG/CR-6808 (reference 39).

Coatings on steel, concrete and equipment in containment were also evaluated. Qualified coatings were evaluated for a 4.0 D ZOI based upon the results of testing presented in WCAP-16568-P. Unqualified coatings were all considered to fail as particulate, as recommended by the guidance documents (references 2 and 3). A further discussion of coatings is contained in Section 3h of this response submittal.

Critical electrical components in containment are shielded by fire retardant material. This fire barrier may become debris if subjected to jet impingement during a LOCA. The maximum amount of potential fire barrier debris was calculated and included for all breaks except for break S6. Break S6 is located outside the bioshield in a location that would shield any fire barrier targets from its break jet.

3) Identify if destruction testing was conducted to determine ZOIs. If such testing has not been previously submitted to the NRC for review or information, describe the test procedure and results with reference to the test report(s).

SNC Response to 3.b.3:

Westinghouse report WCAP-16710-P (reference 24) documents testing performed on jacketed Nukon insulation blankets to determine the proper ZOI. From Section 4 of WCAP-16710-P, "The approach taken to develop this experimental program was to subject the encapsulated …stainless steel jacketed NUKON fiberglass insulation materials to phenomena and processes that accurately simulate those experienced during a postulated LOCA blowdown for a PWR. The conditions of interest are exposure to elevated temperature, pressure and high mass flux." The objective of the test was to determine the generation of debris of the insulation material that should be considered in post-accident sump performance. The testing consisted of subjecting the jacketed NUKON insulation to a two phase jet originating from a subcooled, high pressure, high temperature reservoir.

Qualified coatings on steel, concrete and equipment in containment are also evaluated in a similar test program. Westinghouse report WCAP-16568-P (reference 23) documents testing that was undertaken to develop coatings ZOI spherical equivalents for DBA Qualified/Acceptable coating systems based on experimental data that correlate to plant materials over the range of temperatures and pressures associated with a postulated large-break LOCA.

4) Provide the quantity of each debris type generated for each break location evaluated. If more than four break locations were evaluated, provide data only for the four most limiting locations.

SNC Response to 3.b.4:

Table 3b.4-1: Summary of LOCA Generated Debris Inside the ZOI (8D)

Debris Type	Units	Break S1	Break S2	Break S3	Break S8
INSULATION					
Nukon	[ft^3]	520	520	726	807
QUALIFIED COATINGS					
Steel Coatings	[ft^3]	6.75	6.75	6.75	6.75
Concrete Coatings	[ft^3]	0.25	0.25	0.25	0.25
FIRE BARRIER DEBRIS	[ft^3]	19.5	19.5	19.5	19.5

5) Provide total surface area of all signs, placards, tags, tape, and similar miscellaneous materials in containment.

SNC Response to 3.b.5:
Labels, tags, stickers, placards and other miscellaneous or foreign materials were also evaluated via walkdown. As with latent debris, a foreign material walkdown was only performed for Unit 1. The amount of foreign materials found by the walkdown is conservatively doubled to account for inconsistencies between the units and to insure adequate margin. This results in 3.6 ft^2 of foreign materials being applied to VEGP Unit 1. As no data is available for Unit 2 and based on the comparison of the units discussed previously, the Unit 1 data is considered applicable to both units.

3.c Debris Characteristics

1) Provide the assumed size distribution for each type of debris.

SNC Response to 3.c.1:

The debris sources at VEGP include insulation, coating, foreign material and latent debris. All insulation debris is from Nukon fiber. The characteristics of the insulation debris material are discussed in this section as the characteristics of the other debris types (e.g. foreign and latent debris, coatings) are included in their respective sections of this response submittal (Sections 3d and 3h). The debris characteristics used for the analyses at VEGP do not deviate from the NRC approved methodology.

Size Distribution

Nukon
A ZOI of 8.0 D is used for jacketed Nukon insulation at VEGP, based on test data from WCAP-16710-P (reference 24). For this ZOI, the suggested Nukon size distribution contained in Table 3-3 of the SER (Reference 3) is not applicable. Instead, the size distribution is determined from Figure II-1 of the SER, which relates jet pressure to ZOI radii, and Figure II-2 of the SER, which relates jet pressure to the fraction of small debris generated. The data presented in Figure II-2 comes from the Air Jet Impact tests, which are discussed in many documents related to GSI-191 including NUREG/CR-6808 (reference 39).

Figure II-1 of the SER indicates that within a ZOI of 8.0 D the pressure of the break jet will be at least 18 psi at all points. It is shown in Figure II-2 of the SER that a jet pressure of 17 psi or greater generates 100% small piece and fine debris. Therefore, no large or intact pieces of Nukon debris are expected to be generated. However, the debris generated is split into categories of fine debris and small pieces. Guidance pertaining to the relative amounts of each of these debris classes is presented on page II-7 of the SER, which states that the debris generation testing for Nukon resulted in 25% of the debris being “individual fibers” (fines) and the other 75% being small-piece debris. Hence, 25% of Nukon debris is considered fines and the other 75% is considered small-pieces. Fines that enter the active recirculation pool are considered 100% transportable. Small pieces are transported based on velocity data found in various references; specifics of debris transport are discussed in Section 3e.

2) Provide bulk densities (i.e., including voids between the fibers/particles) and material densities (i.e., the density of the microscopic fibers/particles themselves) for fibrous and particulate debris.

SNC Response to 3.c.2:

Per Table 3-2 of NEI 04-07 (reference 2), the bulk density of Nukon insulation is 2.4 lbm/ft^3. The bulk density of the Nukon insulation installed at VEGP is 2.4 lbm/ft^3. This compares to a bulk density of

2.4 lbm/ft^3 of the fiber used for sump strainer performance testing.

Consistent with the NRC SER of NEI 04-07 (reference 2), 15% of the latent debris load (by mass) is assumed to be fibrous debris and the other 85% (by mass) is treated as particulate debris. Likewise, consistent with the SER (Reference 3), a density of 2.7 g/cm^3 for particulate debris is used. For latent fibrous debris, a density of 2.4 lb_m/ft^3 (bulk density of Nukon per NEI, Reference 2) is used in order to conservatively maximize the volume of latent fibrous debris.

3) Provide assumed specific surface areas for fibrous and particulate debris.

SNC Response to 3.c.3:

The specific surface area (S_v) was only used for preliminary analytically determined head loss values across a debris laden sump screen using the correlation given in NUREG/CR-6224 (reference 29). Since the head loss across the installed sump screen is determined via testing, these values are not used in the design basis for VEGP. Therefore, these values are not provided as part of this response.

4) Provide the technical basis for any debris characterization assumptions that deviate from NRC-approved guidance.

SNC Response to 3.c.4:

No deviations were taken from the NRC approved guidance for debris characterization.

3.d Latent Debris

1) Provide the methodology used to estimate quantity and composition of latent debris.

SNC Response to 3.d.1:

Walkdown Plan
Latent debris has been evaluated by containment walkdown as recommended by Section 3.5.2 of NEI 04-07 (reference 2) and confirmed by the NRC SER (Reference 3). A walkdown of the VEGP Unit 1 containment was conducted in accordance with the guidance provided by NEI documents 04-07 (Reference 2), NEI 02-01 (reference 41) and the SER of NEI document 04-07 (Reference 3). As shown below, three or more samples were collected for most surface types. The additional samples collected for certain surface types increased the statistical accuracy of the evaluation. Less than three samples were collected for three surface types. Since only one sample was available for horizontal HVAC ducting, the samples

collected for horizontal cable trays were added to the horizontal HVAC category. Similarly, only one sample was available for vertical cable trays; therefore, data from vertical HVAC ducting were added to the vertical cable tray category. This approach is considered acceptable based on the similarity of the debris on these surfaces. No samples were available for grating; therefore, grating was assumed to have the same latent debris loading as the floor. A listing of the number of each sample type follows.

Table 3.d.1-1 Number of Samples Collected

Liner - 4	HVAC Duct (Vertical) - 3
Equipment (Horizontal) - 6	Pipe (Horizontal) - 6
Equipment (Vertical) - 7	Pipe (Vertical) - 6
Floor - 4	Cable Tray (Horizontal) - 3
Wall - 5	Cable Tray (Vertical) - 1
HVAC Duct (Horizontal) - 1	Gratings - 0

The weights of the samples collected were used to determine the latent debris mass distribution (g/ft^2). Measurements taken were accurate to 0.1 grams. A statistical analysis of the samples was performed in the post-processing of the latent debris walkdown results. The analysis determined a 90% confidence limit of the mean value for each type of surface based on a normal distribution. The upper limit of the mean value for each surface type was then applied over the entire surface area of that type throughout containment. This analysis lends further confidence and conservatism to the latent debris mass determination.

A comparison of Units 1 and 2 indicates the two units are very similar; therefore, a walkdown for VEGP Unit 2 was not performed. The general arrangements of the two units are a mirror image of each other, as are the concrete layouts and equipment locations. The primary piping sizes and lengths, insulation types and thicknesses and primary equipment steel are the same between the units. Given that the units are physically very similar (and that they are subject to the same house-keeping and close-out procedures), it is expected that their latent debris totals will be very similar also. However, to account for minor differences between the units, to allow for variations in future housekeeping procedures and to ensure additional margin, the calculated latent debris value of Unit 1 is doubled and used for both units.

The results of the latent debris calculation conservatively determined the debris loading to be 60 lb_m. As mentioned previously, the total is conservatively doubled to 120 lb_m, for both units.

Consistent with the NRC SER of NEI 04-07 (reference 2), 15% of the latent debris load (by mass) is assumed to be fibrous debris and the other 85% (by mass) is treated as particulate debris. Likewise, consistent with the SER (Reference 3), a density of 2.7 g/cm^3 for particulate debris is used. For latent fibrous debris, a density of 2.4 lb_m/ft^3 (bulk density of Nukon per NEI, Reference 2) is used in order to conservatively maximize the volume of latent fibrous debris. As the specific surface area of debris is only relevant for head-loss calculations per NUREG/CR-6224 (reference 29) and head-loss evaluations are being conducted experimentally, the specific surface area of latent debris is not determined.

Labels, tags, stickers, placards and other miscellaneous or foreign materials were also evaluated via walkdown. As with latent debris, a foreign material walkdown was only performed for Unit 1. The amount of foreign materials found by the walkdown are conservatively doubled to account for inconsistencies between the units and to insure adequate margin. This results in 3.6 ft^2 of foreign materials being applied to VEGP Unit 1. As no data is available for Unit 2 and based on the comparison of the units discussed previously, the Unit 1 data is considered applicable to both units.

A sacrificial area of 3.6 ft^2 of the strainer surface per strainer is retained for labels, tags, stickers, placards and other miscellaneous or foreign materials. This total includes only those materials which are not Design Basis Accident (DBA) qualified. As most equipment is identified with qualified labels and very few unqualified labels, tags, stickers, placards and other miscellaneous or foreign materials are present in containment, the amount of foreign materials considered is very small.

Miscellaneous latent debris is also discussed in more detail in the following debris transport section.

Table 3d.1-2: Latent and Foreign Material Debris

Latent and Foreign Material Debris	Both Units
Latent Debris (lb_m)	120
Fiber (lb_m)	18
Particulate (lb_m)	102
Foreign Material Debris (ft^2)	3.6

2) Provide the basis for assumptions used in the evaluation.

SNC Response to 3.d.2:

See response to 3.d.1 above.

3) Provide results of the latent debris evaluation, including amount of latent debris types and physical data for latent debris as requested for other debris under c. above.

SNC Response to 3.d.3:

See response to 3.d.1 above.

4) Provide amount of sacrificial strainer surface area allotted to miscellaneous latent debris.

SNC Response to 3.d.4:

No sacrificial strainer surface area has been allotted to specifically address miscellaneous latent debris. Latent debris was included in the head loss testing. The results of the latent debris calculation conservatively determined the debris loading to be 60 lb_m. As mentioned previously, the total is conservatively doubled to 120 lb_m, for each unit.

3.e Debris Transport

1) Describe the methodology used to analyze debris transport during the blowdown, washdown, pool-fill-up, and recirculation phases of an accident.

SNC Response to 3.e.1:

The debris transport analysis for VEGP is conducted in accordance with both NEI 04-07 (Reference 2) and the NRC Safety Evaluation of the NEI Guidance (Reference 3.) As such, each phase of post-LOCA transport is considered: blowdown, washdown, pool fill-up and recirculation. A detailed discussion of each transport phase, including information on their effect on overall transport for VEGP follows.

Blowdown/Washdown

As indicated previously, all insulation debris at VEGP is Nukon fiber. As discussed in Section 3.6.3.2 of NEI 04-07 (Reference 2), and confirmed by the SER (Reference 3), all Nukon debris that is blown into upper containment is subsequently expected to transport to the containment floor during washdown for a mostly uncompartmentalized containment, such as at VEGP. Therefore, since all insulation debris

eventually lands on the floor, a detailed blowdown and washdown analysis was not conducted. Rather, all insulation debris generated is conservatively placed on the floor immediately and is further transported by pool fill-up and recirculation as discussed in the following sections. Conservatively, qualified coatings are also considered to fall directly to the floor. All other debris types, including unqualified coatings, latent and foreign material debris are generated from outside the break ZOI and are therefore considered to fall directly to the floor.

Pool Fill-up

Conservatively, no inactive pools are credited at VEGP. All debris on the floor prior to pool fill-up remains on the floor in the active pool after pool fill-up. During pool fill-up, debris is transported to the secondary shield wall doorways by the water spilling onto the floor. Debris is then further transported by recirculation, as discussed in the following section.

Recirculation

Debris that reaches the containment pool is subject to transport by the pool flow present during recirculation. In accordance with the NEI and SER Guidance documents (References 2 and 3), all fine debris that lands in the pool is considered to transport to the sump strainer. The transport of small pieces of debris during recirculation is dependent on the velocities present in the containment pool. As discussed previously, the reduced ZOI used in the debris generation analysis at VEGP necessitates the use of a modified debris size distribution, which contains no large or intact debris.

To assist in the determination of recirculation transport fractions, several Computational Fluid Dynamics (CFD) simulations were performed using Fluent™, a commercially available software package. Single and double train recirculation were investigated by the CFD simulations to ensure a conservative representation of the post-LOCA containment sump flow velocities. Two breaks were also evaluated, one inside the secondary shield wall and one outside of it, to determine which scenario would maximize debris transport. The simulation results include a series of contour plots of velocity and turbulent kinetic energy (TKE), plots of flow pathlines originating at the break locations and animations of the flow velocities. These results have been combined with information in the GSI-191 literature and plant specific erosion test results to determine the overall transport fractions for small pieces of Nukon debris (fines are 100% transportable).

Nukon debris transport was investigated and reported in NUREG/CR-6772 (reference 37). Transport velocities pertinent to Nukon debris transport at VEGP were taken from this document. The document

reports values at which some debris begins to move and at which a majority begins to move. These are referred to herein as the "incipient tumbling" and "bulk transport" velocities. Conservatively, the incipient tumbling velocity was used to determine transport potential. Accordingly, small Nukon pieces were considered to transport at velocities of 0.12 ft/s or greater and to transport over a 6-inch curb at 0.34 ft/s. Nukon jacketing was expected to transport beyond the secondary shield wall doors during pool fill-up and then come to rest, as jacketing was not expected to transport at velocities below 0.7 ft/s, and there is no continuous flow path of this velocity between the secondary shield wall door and the sump strainers.

Simulation 1 of the CFD analysis investigated two-train recirculation, which resulted in pool velocities high enough to transport the small-piece Nukon debris at VEGP. However, since the two trains draw from separate sump pits that are remote from each other, the higher velocities created by two-train recirculation do not necessarily maximize the debris load on the strainers. Conservatively, all the debris generated is preferentially placed outside the secondary shield wall doorway which leads to the nearer of the two sump pits and is transported to that sump strainer. Also, conservatively, the flow velocities associated with two-train recirculation are used in order to maximize debris transport. All debris is expected to transport to the area around the strainer.

No debris interceptors are installed at VEGP. However, credit was taken for the curb and plenum that the strainers sit on. From the CFD results, it was determined how much of the plenum and curb perimeter is in areas with flow velocities in excess of the 0.34 ft/s required to lift the debris over a 6-inch obstacle. Since the curb and plenum together are approximately 8-inches tall, using the lift-over curb velocity for a 6-inch curb was conservative. The fraction of the curb perimeter in excess of the lift-over curb velocity was applied to the debris pile in the vicinity of the strainer to determine the debris load on the strainer. Less than 25% of the perimeter has velocities in excess of those necessary to lift over a 6-inch curb; however, for conservatism, 25% of the small debris was treated as lifting onto the sump strainer.

As noted in NUREG/CR-6773 (reference 38), Nukon debris is subject to erosion during recirculation. Plant specific testing conducted for VEGP indicates that the erosion values recommended in Appendix III of the SER (Reference 3) may be reduced. The testing indicates that an erosion rate of 10% over 30 days is appropriate for the conditions and debris present at VEGP. In order to increase the margin of the transport calculation, a 15% erosion factor has been applied instead. Therefore, of the small debris that does not initially lift onto the sump strainer, 15% erodes into fine debris over the 30-day recirculation mission time and is subsequently transported to the sump strainer.

2) Provide the technical basis for assumptions and methods used in the analysis that deviate from the approved guidance.

SNC Response to 3.e.2:

The debris transport analysis for VEGP was conducted in accordance with both NEI 04-07 provided in Reference 2 and the NRC Safety Evaluation of the NEI Guidance provided in Reference 3.

3) Identify any computational fluid dynamics codes used to compute debris transport fractions during recirculation and summarize the methodology, modeling assumptions, and results.

SNC Response to 3.e.3:

To assist in the determination of recirculation transport fractions, several Computational Fluid Dynamics (CFD) simulations were performed using Fluent™, a commercially available software package. Single and double train recirculation were investigated by the CFD simulations to ensure a conservative representation of the post-LOCA containment sump flow velocities. Two breaks were also evaluated, one inside the secondary shield wall and one outside of it, to determine which scenario would maximize debris transport. The simulation results include a series of contour plots of velocity and turbulent kinetic energy (TKE), plots of flow pathlines originating at the break locations and animations of the flow velocities. These results have been combined with information in the GSI-191 literature and plant specific erosion test results to determine the overall transport fractions for small pieces of Nukon debris (fines are 100% transportable).

4) Provide a summary of, and supporting basis for, any credit taken for debris interceptors.

SNC Response to 3.e.4:

No debris interceptors are installed at VEGP. However, credit was taken for the curb and plenum that the strainers sit on. From the CFD results, it is determined how much of the plenum and curb perimeter is in areas with flow velocities in excess of the 0.34 ft/s required to lift the debris over a 6-inch obstacle. Since the curb and plenum together are approximately 8-inches tall, using the lift-over curb velocity for a 6-inch curb is conservative. The fraction of the curb perimeter in excess of the lift-over curb velocity was applied to the debris pile in the vicinity of the strainer to determine the debris load on the strainer. Less than 25% of the perimeter has velocities in excess of those necessary to lift over a 6-inch curb; however, for conservatism, 25% of the small debris was treated as lifting onto the sump strainer.

5) State whether fine debris was assumed to settle and provide basis for any settling credited.

SNC Response to 3.e.5:

All fine debris was assumed to transport to the strainer.

7) Provide the calculated debris transport fractions and the total quantities of each type of debris transported to the strainers.

SNC Response to 3.e.6:

Table 3.e.6-1: Maximum Debris Generated and Transported to Strainer – Break S8 (8D)

Debris Transport by Type	Units	Debris Generated	Transport Fraction	Debris at Strainer
INSULATION				
NUKON	[ft^3]	807	0.522	421.2
QUALIFIED COATINGS	[ft^3]	7.0	1.0	7.0
UNQUALIFIED COATINGS	[ft^3]	27.8	1.0	27.8
LATENT DEBRIS	[lb_m]	120.0	1.0	120.0
FOREIGN MATERIALS	[ft^2]	3.6	1.0	3.6
FIRE BARRIER DEBRIS (INTERAM)	[ft^3]	19.5	1.0	19.5

3.f Head Loss and Vortexing

1) Provide a schematic diagram of the emergency core cooling system (ECCS) and containment spray systems (CSS).

SNC Response to 3.f.1:

See Figure 3.f.1-1 for Emergency Core Cooling System Composite and Figure 3.f.1-2 for Containment Spray System Composite.

Figure 3.f.1 – 1
Emergency Core Cooling System Composite

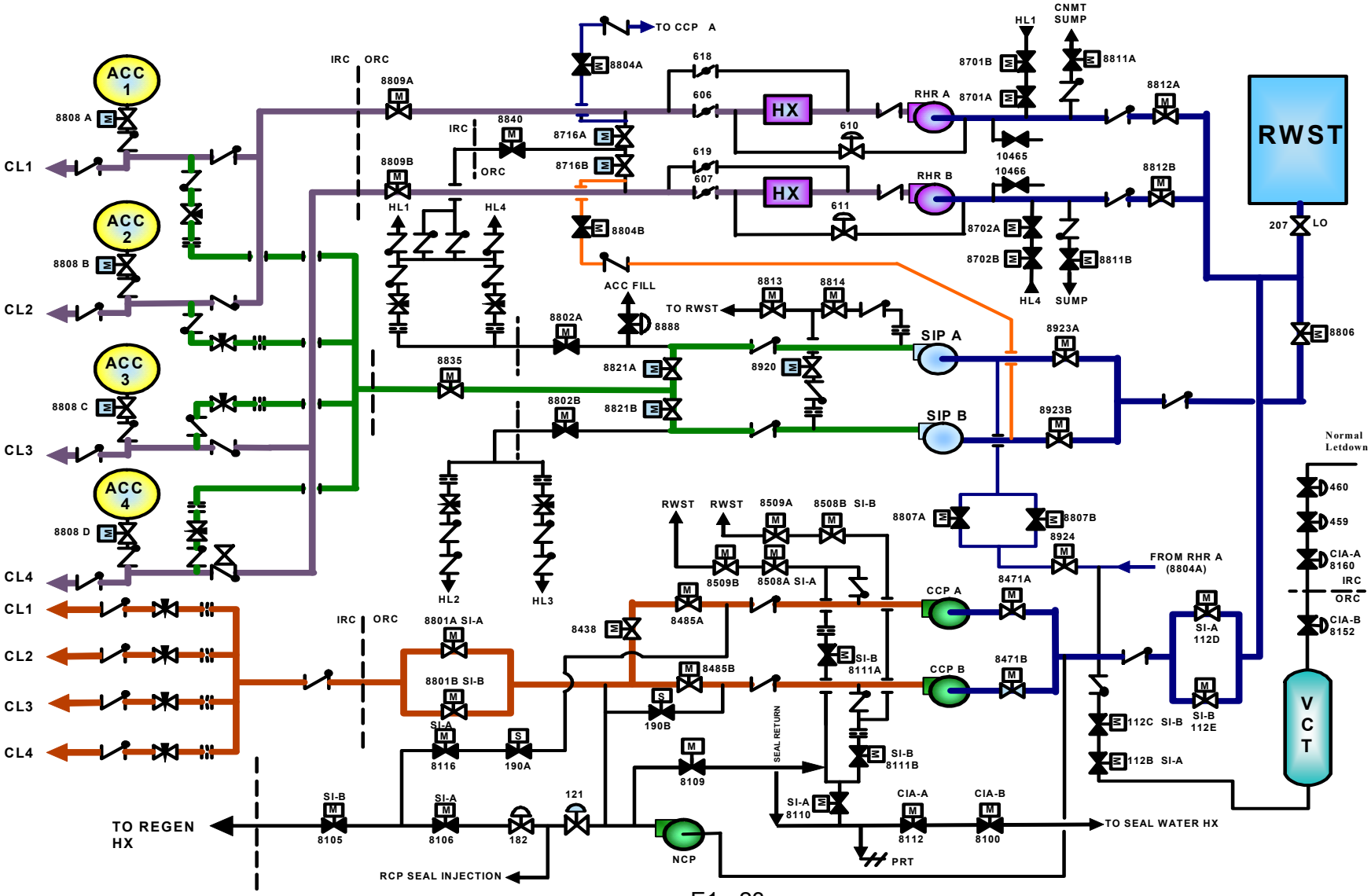

Figure 3.f.1 – 2
Containment Spray System Composite

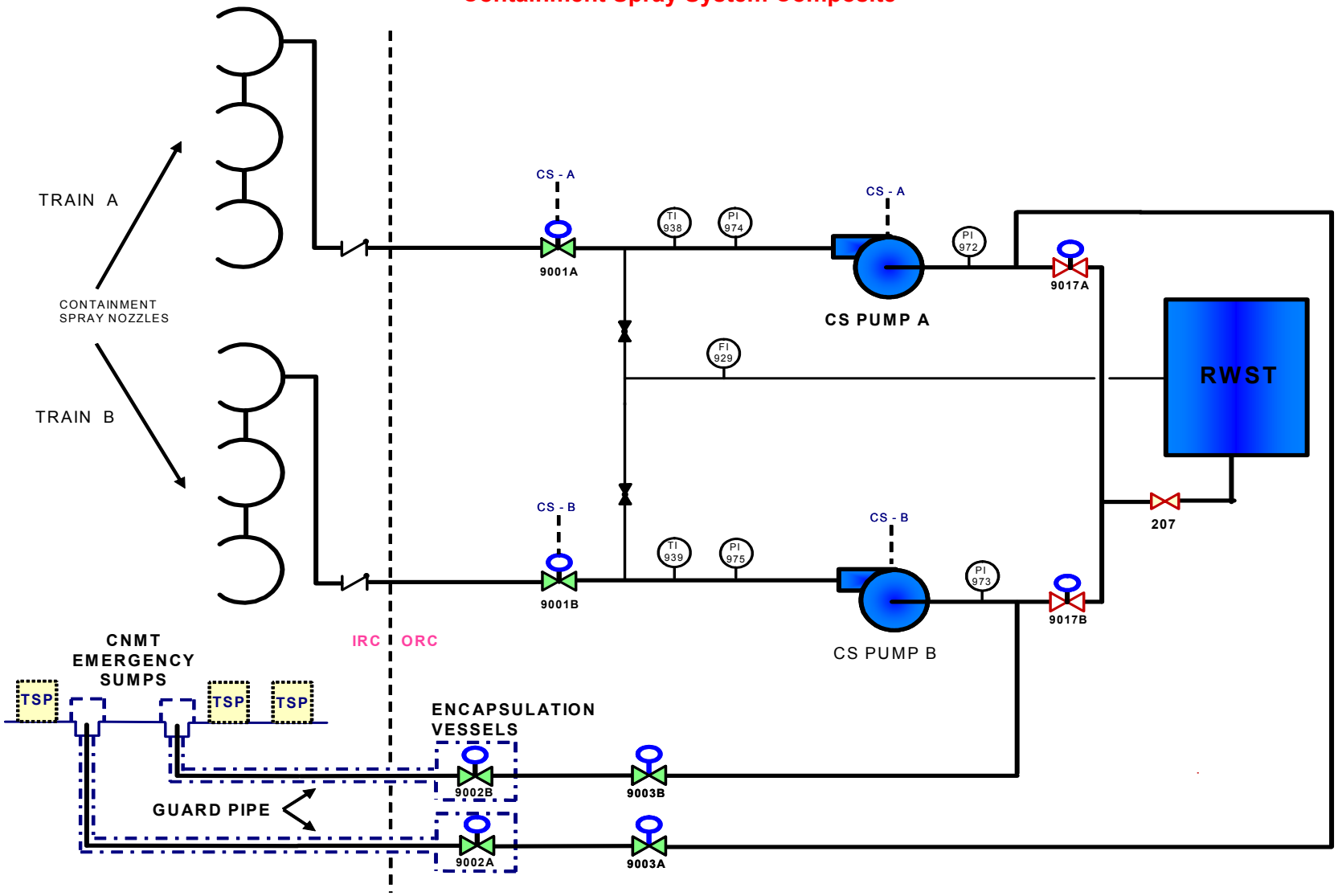

2) Provide the minimum submergence of the strainer under small-break loss-of-coolant accident (SBLOCA) and large-break loss-of-coolant accident (LBLOCA) conditions.

SNC Response to 3.f.2

For the limiting break for screen head loss as selected in accordance with NEI 04-07 (reference 2), strainers would be fully submerged at the minimum calculated sump levels. The RHR screen height is 59.6" above the floor. The minimum calculated water level is 63" above the floor elevation which is calculated to occur at the initiation of recirculation. Under this scenario, the RHR strainers will be fully submerged by no less than 3". The CS strainers are only 46.2" above the floor; therefore, they will be fully submerged by no less than 16".

A small break LOCA that results in minimum sump level would be one that occurs on top of the pressurizer. This level was not calculated as it is not a limiting break location that results in the highest screen head losses. The connections on the top of the pressurizer are 6" in diameter. Therefore, a break in this location would produce very small amounts of debris. In addition, as compared to the limiting large break location, a small break would result in lower sump flow rates and therefore, reduced sump debris transport. The resultant reduced RHR flow rates would result in a reduction in both debris bed head loss and a reduction in the NPSH required for the RHR pumps. Since this is not a limiting break location, the screen submergence was not calculated for this break.

3) Provide a summary of the methodology, assumptions and results of the vortexing evaluation. Provide bases for key assumptions.

SNC Response to 3.f.3

No tests were run specifically for vortexing with specific assumptions. Instead vortexing observations were made as part of the head loss test program. The test module was installed 4 7/16" above the floor of the test tank, as in the installed plant configuration. The water level in the test tank was maintained at a maximum of 3.675" +/- 0.5 inch above the top of the test module, as in the plant installation. No vortexing or air entrainment was observed during testing, for either the debris-laden strainer or clean strainer.

4) Provide a summary of the methodology, assumptions, and results of prototypical head loss testing for the strainer, including chemical effects. Provide bases for key assumptions.

SNC Response to 3.f.4:

Sector Tests:

A sector test is a head loss test using a pair of disks that simulate a fraction, or "sector" of a full size strainer installation. The debris load and flow rate are scaled proportionally to simulate plant conditions.

The test sector is a pair of square disks, 30" high x 30" wide x 0.656" thick, of a stacked disk strainer with a pitch of 3.0". The plate pitch includes a 1.75" gap between the wire mesh, 2 x 0.3" thickness of the wire mesh, 0.5" thickness of the plate internal structure, and 2 x 0.078" thickness of the perforated plate. The interior faces of the disks are perforated with 3/32" holes on 5/32" spacing, as in the plant strainer design for VEGP, and the exterior surfaces are solid sheet material, as is the outer edge of each disk. The diameter of the inner cavity is 12.0".

Sector tests were performed to determine the head loss for four permutations of the highest debris load case, break S8. The debris loads and flow rates for each case were determined by scaling the plant debris loads using the sector test article and the proposed plant strainer circumscribed areas. The flow rate was scaled using the same ratio; therefore, the debris bed thickness, debris composition, and approach velocity of the test were equal to the values of the plant RHR sump strainer.

The flow rates for the sector tests were calculated using Equation 1 below, which yields the same circumscribed approach velocity for the sector test as in the proposed plant strainers. Since the test sector has the same length, width and gap size as the plant strainer, the velocity across the perforated plate is also the same for the test sector and the proposed plant strainers. As shown in Equation 1, the circumscribed area of the plant strainer is reduced by the sacrificial area.

Equation 1

$$Q_{test.sector} = Q_{plant} \times \frac{Area_{circumscribed.test.sector}}{Area_{circumscribed.plant} - Area_{Sacrificial}}$$

Q = Flow Rate (GPM)
Area = Surface Area (ft²)

The sector test debris quantities in the test matrix were calculated using the plant debris loads. The debris loads for the sector tests are calculated using Equation 2, which yields the same debris bed thickness for the sector test as in the proposed plant strainers.

Equation 2

$$Mass_{debris.test.sector} = Volume_{\text{debris at sump}} \times \rho_{debris} \times \frac{Area_{circumscribed.test.sector}}{Area_{circumscribed.plant} - Area_{sacrificial}}$$

$Volume_{debris}$ at sump = Volume of debris that is transported to sump (ft^3)

ρ_{debris} = As-Manufactured density of debris (lb/ft^3)

$Area_{circumscribed}$ = Circumscribed surface area (ft^2).

$Area_{sacrificial}$ = Sacrificial area (ft^2).

Module Tests:

A module test is a head loss test that uses multiple disk sets to simulate a full size strainer. Module testing consists of scaling the plant's debris load and measuring the debris induced head loss across a module of a strainer. These tests determine the head loss characteristics of plant-specific debris as a function of scaled debris load and scaled flow rate.

The test module is composed of ten square perforated disks, 30" long x 30" wide. The interior faces of the disks are perforated with 3/32 in. holes on 5/32 in. spacing, as in the plant strainer design for VEGP. The exterior surfaces (top and bottom) are solid sheet material, as is the outer rim of each disk. The disks are stacked along a vertical axis and the bottom disk is located approximately 4-7/16" above the floor. The 3.0" plate pitch includes a 1.75" gap between the wire mesh, 2 x 0.3" thickness of the wire mesh, 0.5" thickness of the plate internal structure, and 2 x 0.078" thickness of the perforated plate. The diameter of the inner cavity is 12". The module has approximately 98 ft^2 of perforated area and 23 ft^2 of circumscribed area. The orientation of the strainer module is the same as the proposed plant strainer. Scaling of test results based on geometry differences will not be required because the strainers to be installed in VEGP have the same perforated surface dimensions and central cavity diameter as the test module.

Module tests were performed to determine the head loss for two permutations of the highest debris load case. The debris loads and flow rates for each case were determined by scaling the plant debris loads using the module test article and the proposed plant strainer circumscribed areas. The flow rate was scaled using the same ratio;

therefore, the debris bed thickness, debris composition, and approach velocity of the test were equal to the values of the plant RHR sump strainer.

Flow rate for module test is scaled while considering water velocity for the following locations:

- in the circumscribed debris bed
- through the circumscribed area of individual plant strainers
- through the perforated surface of the plant strainers

The velocity in each of the above plant locations was calculated, and the required flow rate to duplicate those velocities in testing was calculated. The highest flow rate was selected, and margin added to that flow rate to account for instrument inaccuracy. The highest flow rate was found to be based on the water velocity in the circumscribed debris bed.

The module test debris quantities in the test matrix were calculated using the plant debris loads. The debris loads for the module tests were calculated by assuming the bed thickness around the group of strainers is uniform, and the test debris bed thickness is equal to the plant debris bed thickness.

The scaled debris loads for module testing are based on the RHR B sump which has the most restricted approach flow patterns caused by nearby interferences (walls, other strainer modules, cable trays, etc.).

The module tests make use of the following assumptions:

- The flow rate is proportional to the circumscribed area of the strainers;
- The debris load and flow rate is distributed equally among the strainers;
- The debris bed is uniform – same thickness throughout perforated surface;
- In the debris load calculation, the circumscribed surface area of a plant installed strainer is the actual circumscribed surface area minus the portion of sacrificial area attributed to the circumscribed area.

In a letter dated December 7, 2007 SNC submitted an extension request for Chemical Effects testing and analysis, and Downstream Effects (Components and Systems reanalysis, Fuel and Vessel analysis.) NRC approval was received in a letter dated December 19, 2007. The information in the extension request will be provided to the NRC by May 31, 2008.

5) Address the ability of the design to accommodate the maximum volume of debris that is predicted to arrive at the screen.

SNC Response to 3.f.5:

At VEGP, the worst-case debris generating and transporting break is S8, based on the total amounts of fibrous and particulate debris. Due to the dynamics of combined fibrous and particulate debris bed head loss, a break that results in less than 100% fiber debris transport to the sump (but 100% particulate debris transport) could cause a greater head loss across the strainer than if 100% of the fiber were transported; this is the “thin bed effect.” All tests were conducted with 100% particulate. Tests were conducted with a 100%, 50%, 7.1% (gap-filled), 3.5%, 1.8%, or 0.9% (thin-bed) fiber load.

Testing a range of fiber transport fractions with 100 % particulate loads demonstrates the ability of the strainer to accommodate a range of debris loads including the maximum volume of debris that is predicted to arrive at the screen.

Testing was performed with two types of test articles: sectors and modules. The sector and module test articles and the test configuration are discussed in detail Items 3.f.4 and 3.f.12.

6) Address the ability of the screen to resist the formation of a "thin bed" or to accommodate partial thin bed formation.

SNC Response to 3.f.6:

Due to the dynamics of combined fibrous and particulate debris bed head loss, a break that results in less than 100% fiber debris transport to the sump (but 100% particulate debris transport) could cause a greater head loss across the strainer than if 100% of the fiber were transported; this is the “thin bed effect.” The nominal debris bed thickness for the sector tests ranges from 0.125” to 1.00.” The nominal debris bed thickness for the module tests ranges from 5.28” to 16.59.”

There is potential for a bed thickness matching the “thin bed” description to be formed during the strainer operation; however, the limiting head loss did not occur with a “thin bed” during VEGP testing. The highest head loss occurs when 100% of the fiber is transported to the strainer, which included sufficient fibrous insulation to fill the strainer gaps and extend beyond the strainer perimeter, forming a “circumscribed” bed.

7) Provide the basis for the strainer design maximum head loss.

SNC Response to 3.f.7

The GE hydraulic suction strainer design methodology is based on plant specific debris head loss testing. Debris head loss correlations were developed using the laboratory test results, scaled to the full plant design conditions.

The head loss is determined by summing up all the head loss components, as follows:

$$Head\ Loss = HL_{debris_plant} + HL_{clean_plant} + HL_{chemical_effects} + HL_{pipes\&plenum}$$

where:

Head Loss = maximum head loss of the strainer.
HL_{debris_plant} = debris head loss at plant conditions.
HL_{clean_plant} = clean head loss at plant conditions.
$HL_{pipes\&plenum}$ = head loss on pipes and / or plenum.
$HL_{chemical_effect}$ = head loss due to chemical effects.

8) Describe significant margins and conservatisms used in the head loss and vortexing calculations.

SNC Response to 3.f.8:

The flow rate is proportional to the perforated (sector test) or circumscribed (module) area of the strainers:

- The flow rate is distributed equally among the strainers;
- The debris load is distributed equally among the strainers for less-than gap-filled conditions;
- The debris load is distributed such that the circumscribed thickness is the same for all strainers after considering near-field physical obstructions;
- The debris bed is uniform – same thickness throughout the perforated surface;
- In the debris load calculation, the circumscribed surface area of a plant installed strainer is the actual circumscribed surface area minus the sacrificial area;
- 100% of particulate debris transported to the sumps is assumed to adhere to the strainers and contribute to head loss;
- All the labels and tags are modeled with 100% transport to the sump screen. The total sacrificial area is calculated by an equivalent to 100% of the original single sided surface area, counting for 0% overlap;
- Due to extremely low approach and perforated flow velocities, laminar flow is assumed for debris head loss calculations;

- Minimum water level at sump;
- All coatings are assumed to fail as particulate and transport to the screens;
- Head loss is calculated for indicated low end of sump water temperature and highest ECCS flow rate;
- The upper circumscribed surface is assumed to be bounding in terms of air ingestion because air ingestion is evaluated at the top of the module, which is the closest surface to the water level.

9) Provide a summary of the methodology, assumptions, bases for the assumptions, and results for the clean strainer head loss calculation.

SNC Response to 3.f.9:

Clean head losses reflect the hydraulic losses associated with clean water flow through the strainer internals. Piping exit losses are considered separately. Multiple strainers in parallel significantly lower the clean head loss by reducing the flow in each strainer.

The clean head loss of the test module was measured to be 1.3" (0.108 ft) of water. This is scaled for the plant strainer size and added to losses due to the piping exiting into the sump using the equation provided below. This equation was derived from basic turbulent theory, where head loss is proportional to the square of the fluid velocity.

Plant strainer clean head loss is calculated by scaling the test module clean head loss. Clean strainer head loss is due to the head loss inside the strainer discs, head loss as the flow exits the discs and enters the central cavity, and head loss inside the central cavity. The geometry of the test strainer is similar to that of the plant strainer. It is assumed that clean strainer head loss results primarily due to turbulent flow in the central cavity of the strainer, because the velocity through the perforated plates is relatively low and because water experiences an abrupt turn as it exits the discs and enters the central cavity.

For central cavity strainers, assuming the gap width is the same, the scaling factor is based on the square ratio of the flow velocities at the entrance of the central cavity:

$$\text{Headloss}_{\text{Clean}} := \text{Headloss}_{\text{Test.Clean}} \cdot \left(\frac{\dfrac{\text{FlowRatePlantDisc}}{\text{dPlant}}}{\dfrac{\text{FlowRateTest}}{\text{dTest}}} \right)^2$$

where:
Head loss$_{Clean}$ = plant strainer clean head loss

Head $loss_{Test.Clean}$ = test strainer clean head loss
FlowRatePlantDisc = plant disc flow rate
dPlant = plant central cavity diameter
FlowRateTest = the test flow rate, varied by test
dTest = test strainer central cavity diameter, varied by test

$hl_{clean-RHR} = 0.175$ ft. (2.1")

Clean strainer head loss data measured from module test is the sum of module clean head loss, connecting pipe entrance head loss and dynamic head, because the pressure transducer was installed inside the exiting piping just outside of the test module.

Module tests were performed for cases where the fiber quantity is great enough to form a circumscribed bed, where debris extends outside of the strainer gaps.

Two permutations of the break S8+ debris load were tested during module testing, each with a different fiber quantity and 100% particulate load, including 100% fiber and 50% fiber.

Table 3.f.9-1 – Sector and Module Test Results

Type of Test	Test Label	Clean Head Loss (in H2O)	Max Head loss (in H2)
Module	S8+1M-100-2	1.3	82.1
	S8+1M-50-2	1.3	21.8

10) Provide a summary of the methodology, assumptions, bases for the assumptions, and results for the debris head loss analysis.

SNC Response to 3.f.10:

Since containment sump water temperature following a LOCA is usually considerably greater than the temperature at which the hydraulic tests are run, debris head loss needs to be scaled to plant conditions as follows:

$$HL_{debris_plant} = HL_{debris_test} * \left[\left(\frac{viscosity_{plant}}{viscosity_{test}} \right) * \left(\frac{velocity_{plant}}{velocity_{test}} \right) * \left(\frac{debris_thickness_{plant}}{debris_thickness_{test}} \right) * \left(\frac{water_density_{test}}{water_density_{plant}} \right) \right]$$

where:
HL = debris head loss through strainer in feet of water.

viscosity = dynamic viscosity of water in lbm/ft-sec.
water_density = density of water in lbm/ft^3.
velocity = approach velocity in ft/sec.
debris_thickness = nominal debris bed thickness in ft.

Nominal debris bed thickness is calculated as follows:

$$debris_thickness = \frac{mass_{fiber}}{density_{fiber} * perforated_area}$$

where:
$mass_{fiber}$ = mass of fiber debris in lbm.
$density_{fiber}$ = as-fabricated density of the fiber debris in lbm/ft^3.
perforated_area = total surface area of the perforated plates in ft^2.

The debris bed is assumed to be uniform, the same thickness throughout the perforated surface.

The debris head loss for the RHR suctions strainers, which bounds the CS strainer performance, is calculated to be 8.126 ft. The total estimated head loss (including clean and piping head losses) are provided in Table 3.f.10-1 below.

Table 3.f.10-1 – Plant Head Loss Summary

	Total Head Loss (ft)	Debris Head Loss (ft)	Clean Head Loss (ft)	Piping Head Loss (ft)
RHR	**8.46**	8.126	0.175	0.158

11) State whether the sump is partially submerged or vented (i.e., lacks a complete water seal over its entire surface) for any accident scenarios and describe what failure criteria in addition to loss of net positive suction head (NPSH) margin were applied to address potential inability to pass the required flow through the strainer.

SNC Response to 3.f.11:

The strainers operate in a fully submerged condition and are not vented to the atmosphere for any accident scenario. In addition to NPSH availability, failure criteria included the presence of vortexing or other forms of air entrainment, or the potential for a single large fiber bed to blanket multiple strainers (during circumscribed bed formation) and block flow to some strainer surfaces. Vortexing and air

entrainment were not observed during several tests that mimicked the full range of plant debris loads, with either a representative water level or conservatively lowered water level. There is insufficient distance between strainers to preclude one large common fiber bed from obscuring some strainers; the test program mimics the close spacing of the plant strainers, allowing debris to bridge between the test strainer and the test pool walls in the same way as debris will bridge between adjacent strainers, thus allowing the plant design to be validated.

12) State whether near-field settling was credited for the head-loss testing and, if so, provide a description of the scaling analysis used to justify near-field credit.

SNC Response to 3.f.12:

Near-field settling is not credited in the sector tests. Some near-field settling is credited in the module head loss tests. For the module test, the pool geometry near the test strainer is scaled to mimic the plant geometry. The module test mockup was based on scaled dimensions of the plant pad, strainer plenum, and strainer height above the plenum to ensure that the near-field settling of debris is representative of the plant. Obstructions near the strainer including walls, cable trays, and other strainers were accounted for in the test mockup. The bulk average velocity during the test was greater than or equal to the highest expected plant flow velocity thus ensuring realistic or conservative debris suspension and transport.
[[

{3}]]

Figure 3.f.12-1 - Test Strainer Module and Cable tray Schematic Elevation View)

[[

{3}]]

Figure 3.f.12-2 – Module Test Setup for Strainer

[[

{3}]]

Figure 3.f.12-3 – Module Test Pool Schematic (Plan and Elevation Views)

[[

{3}]]

13) State whether temperature/viscosity was used to scale the results of the head loss tests to actual plant conditions. If scaling was used, provide the basis for concluding that boreholes or other differential-pressure induced effects did not affect the morphology of the test debris bed.

SNC Response to 3.f.13:

Test strainer head loss is scaled based on velocity, viscosity, and bed thickness differences. Debris head loss and clean strainer head loss are scaled independently.

The debris bed head loss results are scaled using the following equation:

$$\frac{hl_{plant}}{hl_{test}} = \frac{\nu_{plant}}{\nu_{test}} \frac{\frac{Q_{plant}}{A_{plant}}}{\frac{Q_{test}}{A_{test}}} \frac{t_{plant}}{t_{test}}$$

Where:

hl = Debris Bed Head Loss (ft.)
ν = Water Viscosity (lbm/sec-ft)
Q= Sump Flow rate (ft³/s)
A = Perforated Area of strainer(s) (ft) (Does not include top and bottom external surfaces)
t = Debris bed thickness on perforated area (in.)

Testing was performed at a temperature less than plant temperature. The reduced test temperature results in an increase in viscosity. This difference in viscosity is accounted for by the first term in the equation above. The test head loss is multiplied by the ratio of plant water viscosity to test water viscosity, along with the other terms in the equation, to provide a test head loss that is representative of the plant conditions.

Viscosity scaling was performed for module test S8+1M-100-2. Boreholes were not present in this test based on the test vendor's report.

14) State whether containment accident pressure was credited in evaluating whether flashing would occur across the strainer surface, and if so, summarize the methodology used to determine the available containment pressure.

SNC Response to 3.f.14:

SNC credits overpressure, but only for flashing through the strainer. If no overpressure is credited, physics dictates flashing will occur across the strainer surface. To determine the minimum available containment pressure, the saturation pressure corresponding to the sump temperature was determined, and the difference between the containment pressure and sump saturation pressure was calculated as a function of time. This evaluation resulted in the minimum overpressure as a function of time from the design basis containment analysis.

3.g Net Positive Suction Head (NPSH)

1) Provide applicable pump flow rates, the total recirculation sump flow rate, sump temperature(s), and minimum containment water level.

SNC Response to 3.g.1:

The RHR pump flow rates are 4500 GPM each. The CS pump flow rates are 3200 GPM each. The maximum recirculation flow rate would occur with an RHR and CS pump operating in each train. The resulting flow rate is 15,400 GPM. The suction friction losses were calculated using a water temperature of 120 °F. The minimum containment water level is 177' 0".

2) Describe the assumptions used in the calculations for the above parameters and the sources/bases of the assumptions.

SNC Response to 3.g.2:

The RHR and CS flow rates are maximum values for pump run-out.

3) Provide the basis for the required NPSH values, e.g., three percent head drop or other criterion.

SNC Response to 3.g.3:

The NPSH required (NPSHr) values are taken from the bounding pump vendor curves. NPSH available (NPSHa) testing would have been completed in accordance with the Hydraulic Institute guidelines in effect at the time of the pump manufacture. Typically, the 3% head drop criterion was used for all NPSHa testing.

4) Describe how friction and other flow losses are accounted for.

SNC Response to 3.g.4:

The verification of adequate NPSH to the RHR and CS pumps from the containment sump used a three step process. First, the maximum pump flow rates were determined using the pump run out flow

resulting from the most limiting single failure to predict conservatively high flow rates. These maximum flow rates were then used to predict the pressure drop expected through the sump intake structure and pump suction piping due to friction and from losses using a combination of experimental and published loss coefficients. The pressure drops were then used to calculate the pump minimum available NPSH using conservative containment pressure and temperature assumptions.

5) Describe the system response scenarios for LBLOCA and SBLOCAs.

SNC Response to 3.g.5:

In response to a LOCA, the Residual Heat Removal (RHR), Safety Injection (SI) and Centrifugal Charging Systems (CCS) automatically start upon receipt of a safety injection signal. These pumps inject to the reactor coolant system cold legs, taking suction from the refueling water storage tank (RWST). This system line-up is referred to as ECCS Injection phase. The Containment Spray System (CSS) pumps start automatically when the containment pressure reaches the setpoint for CSS actuation. The CSS pumps also take suction from the RWST. The switchover to the ECCS recirculation sumps as suction source to the RHR pumps is initiated when the RWST water level decreases to the Low-Low level setpoint.

After the ECCS recirculation line-up is established, the RHR pumps combine to inject to the Reactor Coolant System (RCS) cold legs and to supply water to the suction of the SI and CCS pumps. The SI and CCS pumps continue to inject to the RCS cold legs. This line-up is referred to as ECCS Cold Leg Recirculation. At approximately 7.5 hours into the event, the ECCS line-up is modified for simultaneous Cold and Hot Leg recirculation. The results in the RHR and SI pumps being aligned to the hot legs and the CCS pumps aligned to the cold legs.

The CSS pumps continue to take suction from the RWST until the suction source is manually switched over to the ECCS recirculation sumps when the RWST water level decreases to the RWST Empty alarm setpoint.

The above describes the design response for the ECCS and the CSS to a LOCA. The differences between the response to a Large Break LOCA and a Small Break LOCA are:

- Depending on the size of the break, the RCS pressure may stabilize at a value that does not allow injection from the SI and/or the RHR pumps.
- In SBLOCA scenario, the containment accident pressure will likely remain below the actuation setpoint for CSS.

In a SBLOCA, the outflow from the RWST may be sufficiently low that the plant may be taken to a safe shutdown condition before the RWST level setpoint for ECCS switchover is reached. Additionally, the quantity of debris that is generated in a SBLOCA scenario is a small fraction of the design basis debris quantity that was used to size the strainers.

6) Describe the operational status for each ECCS and CSS pump before and after the initiation of recirculation.

SNC Response to 3.g.6:

Residual Heat Removal Pumps

In the event of an accident, the RHR pumps are started automatically on receipt of an SI signal. The RHR pumps take suction from the RWST during the injection phase and are automatically realigned to the containment emergency sump during the recirculation phase, although manual operator action is required to close the suction path from the RWST. A minimum flow bypass line is provided on each pump discharge to recirculate and return the pump discharge fluid to the pump suction should these pumps be started with the RCS pressure above their shutoff head. Once flow is established to the RCS, each pump bypass line automatically closes. The minimum flow bypass lines prevent deadheading of the pumps and permit pump testing during normal operation.

Centrifugal Charging Pumps

In the event of an accident, the centrifugal charging pumps are started automatically on receipt of an SI signal and are automatically aligned to take suction from the RWST during the injection phase. During recirculation, suction is provided from the RHR pump discharge.

These high-head pumps deliver flow to the RCS at the prevailing RCS pressure. Each centrifugal charging pump is a multistage diffuser design, barrel-type casing with vertical suction and discharge nozzles. A minimum flow bypass line is provided on each pump discharge to prevent pump deadheading and to permit pump testing during power operations. Each minimum flow bypass line contains an isolation valve that closes automatically upon receipt of an SI signal. A third isolation valve is provided in the common header downstream of the two individual pump minimum flow lines. An alternate minimum flow line is provided for each pump to prevent pump deadheading should RCS pressure rise following isolation of the normal minimum flow lines. An isolation valve in each of these lines is enabled by the SI signal and opens upon receipt of a high pressure signal from a pressure switch connected to the centrifugal charging pump

discharge. When the isolation valve opens, flow will be discharged to the RWST. Both isolation valves in each alternate minimum flow line are closed from the control room as part of the ECCS realignment from the injection to the recirculation mode.

Safety Injection Pumps

Two SI pumps are provided. Each pump is a multi-stage, diffuser design, split-case centrifugal pump with side suction and side discharge. In the event of an accident, the SI pumps are started automatically on receipt of an SI signal. These pumps deliver water to the RCS from the RWST during the injection phase and from the containment emergency sump via the RHR pumps during the recirculation phase. A minimum flow bypass line is provided on each pump discharge to recirculate flow to the RWST in the event that the pumps are started with the RCS pressure above pump shutoff head. This line also permits pump testing during normal plant operation. Two parallel valves in series, with a third downstream in a common header, are provided for isolation of the minimum flow lines. These valves are manually closed from the control room as part of the ECCS realignment from the injection to the recirculation mode.

The NPSH for the SI and charging pumps was evaluated for both the injection and recirculation modes of operation for the DBA. The end of the injection mode of operation gives the limiting NPSH available (minimum static head). The NPSH available was determined from the elevation head and vapor pressure of the water in the RWST, which is at atmospheric pressure, and from the pressure drop in the suction piping from the tank to the pumps. The NPSH evaluation for the charging and SI pumps from the RWST was based on all safeguards pumps operating, with the pump being analyzed at its runout flowrate.

When a predetermined low RWST level is reached, the SI and charging pumps are manually aligned to take suction from the RHR pump discharge headers. The NPSH requirements of these pumps are therefore satisfied by the discharge head of the RHR pumps during the recirculation mode of system operation.

Containment Spray System Pumps

The containment spray system is actuated by a signal initiated manually from the control room or automatically on coincidence of two of four containment pressure (high-3) signals. These signals start the containment spray pumps and open the discharge valves to the spray headers. A small portion of the total spray flow is recirculated via the eductor back to the spray pump suction.

During all modes of operation except refueling, the suction of the pumps is normally aligned to the RWST. The spray pumps continue

to draw suction from the RWST until the later stages of the injection phase. After the ECCS is realigned from injection to recirculation, and when the RWST level reaches empty, the spray pump suction is remote-manually shifted to the containment emergency sumps.

7) Describe the single failure assumptions relevant to pump operation and sump performance.

SNC Response to 3.g.7:

Each RHR and CS pump has a separate strainer. For strainer loading, it was assumed that only one train of each system operates. This maximized debris loading on the strainers.

8) Describe how the containment sump water level is determined.

SNC Response to 3.g.8:

Conservative contribution from the RWST, RCS and Accumulators are summed to provide the total inventory. For more detail, see the response to 3.g.9.

9) Provide assumptions that are included in the analysis to ensure a minimum (conservative) water level is used in determining NPSH margin.

SNC Response to 3.g.9:

The following assumptions are included in the SNC analysis:

- ECCS switchover and containment spray switchover are assumed to be instantaneous. This eliminates the increase in flood level during the switchover sequence.
- The minimum RWST volume is assumed from the beginning of the LOCA event to the start of ECCS and CSS switchover. This minimizes the water volume available from the RWST for flooding.
- Maximum RWST level instrument errors are assumed to minimize the available volume.
- The minimum temperature corrected RCS volume is used. This minimizes the water available from the RCS for flooding of the sump.
- The minimum pressurizer volume is used. This minimizes the water available from the pressurizer for flooding of the sump.
- The minimum safety injection accumulator volume is used. This minimizes the water available from the safety injection accumulators for flooding of the sump.

- A low initial containment relative humidity is used. This minimizes the water vapor in the containment free volume available for flooding of the sump.
- The maximum initial containment temperature is used. With a fixed initial relative humidity and pressure, this minimizes the water in the containment air space available for flooding of the sump.
- For long term ECCS sump level it is assumed that the RCS partially refills. This minimizes the water available for flooding of the sump.

The quantity of water diverted from the containment sump is calculated for each break. Water is diverted from the containment sump by the following effects:

- Steam holdup in the containment atmosphere.
- Filling of the reactor cavity beneath the vessel.
- Water volumes in transit in the form of containment spray droplets and wetted surface film.
- Water volume required to fill the RHR and CS piping that is empty prior to the LOCA.
- Filling of containment floor drains.
- Filling of the Reactor Cavity Sump.
- The mass of water inventory in the accumulators is minimized by assuming a maximum temperature.
- It is assumed that in the long-term the reactor cavity will fill until the water level in the reactor cavity is equal to the water level in the Containment Emergency Sump.

10) Describe whether and how the following volumes have been accounted for in pool level calculations: empty spray pipe, water droplets, condensation and holdup on horizontal and vertical surfaces. If any are not accounted for, explain why.

SNC Response to 3.g.10:

The following additional volume reductions based are conservatively assumed to be filled from switchover to ECCS recirculation through the end of the event.

• Containment spray and RHR system filling	1,315 gallons
• Containment Spray Discharge filling	3,700 gallons
• Containment floor drain filling	1,765 gallons
• Reactor Cavity Sump filling	778 gallons
• Containment Normal Sumps filling	1,556 gallons
• Spray droplets / wetted surface film	7,400 gallons
Total additional volume reduction =	16514 gallons

11) Provide assumptions (and their bases) as to what equipment will displace water resulting in higher pool level.

SNC Response to 3.g.11:

There are several structures, mostly at containment floor level, that increase the flood level. These include SG and RCP supports, various heat exchangers, tanks (including part of the Pressurizer Relief Tank), structural steel, spider pipe rack columns, ladders, HVAC units, pipes, valves, etc. The total volume of these structures has been estimated to be 891.4 ft^3 for elevation 174' and below. Additionally, the volume of these structures above elevation 174', up to elevation 177', has been estimated to be 1,167.2 ft^3. The volume of these structures was based on the geometry of the structure, the density of its heaviest component, or a previously calculated value. Piping and valves were assumed to be empty and no credit was taken for fluid inside them. Complex geometries were simplified so that less volume than the actual volume of the structure was credited. Since there are additional structures that were not considered and because of the methodology used, the calculated volume is conservative.

12) Provide assumptions (and their bases) as to what water sources provide pool volume and how much volume is from each source.

SNC Response to 3.g.12:

The following water sources were considered to contribute to the containment post-accident pool volume:

- RCS – minimum volume used: 10,516 ft^3

  This volume includes Steam Generator tube volume.
- RWST – minimum volume used from start of event to ECCS switchover" 435,522 gallons. The volume was determined by considering the volume available between the minimum RWST Technical Specification volume and the RWST Low Level alarm (beginning of ECCS switchover sequence) accounting for a 1.4 % differential level uncertainty.
- RWST – minimum volume used from start of event to CSS switchover: 580,497 gallons. The volume was determined by considering the volume available between the minimum RWST Technical Specification volume and the RWST Empty alarm (beginning of CCS switchover sequence) accounting for a 1.4 % differential level uncertainty.
- Safety Injection Accumulators – minimum volume used: 26,220 gallons. This volume corresponds to the minimum water level required by the TS.

13) If credit is taken for containment accident pressure in determining available NPSH, provide description of the calculation of containment accident pressure used in determining the available NPSH.

SNC Response to 3.g.13:

Credit was not taken for containment accident pressure above that of the vapor pressure of the sump water.

14) Provide assumptions made which minimize the containment accident pressure and maximize the sump water temperature.

SNC Response to 3.g.14:

For sump temperatures greater than 212 °F, for calculating NPSHa, no credit is taken for containment pressure above the partial pressure exerted by the sump fluid.

15) Specify whether the containment accident pressure is set at the vapor pressure corresponding to the sump liquid temperature.

SNC Response to 3.g.15:

The containment accident pressure was conservatively set at the vapor pressure corresponding to the sump liquid temperature.

16) Provide the NPSH margin results for pumps taking suction from the sump in recirculation mode.

SNC Response to 3.g.16:

The conservatively calculated limiting NPSH margin occurred at the initiation of recirculation when containment sump conditions were assumed to be in saturation for the purpose of NPSH calculations. At that point in time the calculated limiting NPSH margins are:

	NPSH Margin
RHR A Pump	10.1 ft
RHR B Pump	8.1 ft
CSS A Pump	18.2 ft
CSS B Pump	17.1 ft

3.h Coating Evaluation

1) Provide a summary of type(s) of coating systems used in containment. (e.g., Carboline CZ 11 Inorganic Zinc primer, Ameron 90 epoxy finish coat.)

SNC Response to 3.h.1:

Steel Coatings

Coating Systems	Coating Description	Possible Products
FN-3, FN-8, FN-10, FN-12, FN-31, FN-36	**Primer Coat**	Carboline Carbo Zinc 11 SG Carboline 676 Carboline 801 Primer coat Ameron 90N Ameron 400 Ameron 400NT Keeler & Long 6548
	Intermediate Coat	Ameron 90N Ameron 400 Carboline 191 KB Carboline 801 Keeler & Long 6548
	Final Coat	Ameron 90N Keeler & Long 6548

Concrete Wall Coatings

Coating Systems	Coating Description	Possible Products
FN-13, FN-14, FN-19	**Primer Coat**	Keeler & Long 4129
	Intermediate Coat	Keeler & Long 4000
	Final Coat	Keeler & Long D-Series

Concrete Floor Coatings

Coating Systems	Coating Description	Possible Products
FN-13, FN-14, FN-19	**Primer Coat**	Keeler & Long 6129
	Intermediate Coat	Keeler & Long 5000
	Final Coat	Keeler & Long 5000

2) Describe and provide bases for assumptions made in post-LOCA paint debris transport analysis.

SNC Response to 3.h.2:

In accordance with the guidance provided by the NEI and SER (References 2 and 3), all coating debris is considered particulate and as such is modeled as transporting to the sump strainer.

3) Discuss suction strainer head loss testing performed as it relates to both qualified and unqualified coatings and what surrogate material was used to simulate coatings debris.

SNC Response to 3.h.3:

Based on the results of the module tests, the worst case debris loading for RHR and CS suction strainer head loss is a high particulate, 100% fiber debris loading case. The worst-case 100% fiber condition was evaluated by test case S8+1M-100-2, and the results of that case were scaled to determine the plant head loss values.

Initial tests were performed with a debris type known as 'Min-K'. Test results with Min-K resulted in an unacceptable head loss; Min-K was subsequently removed from the plant, and testing repeated without it.

The prior VEGP sector test results indicated that the bounding condition for simulating plant LOCA debris-generation is 100% fiber and 100% particulate.

All coatings are conservatively assumed to fail as particulate.

Transco was used as a surrogate for Nukon because both are fiberglass insulations, and because the density of Transco (2.4 lb/ft^3) matches the density for Nukon.

ElectroCarb black silicon carbide size 800 from Electro Abrasives is used because it has a 10-micron diameter, which follows NEI guidance and is believed to be the limiting particle size for head loss, and has the same density as the qualified and unqualified coatings.

Latent particulate and other debris were simulated by the same black silicon carbide used to simulate coatings. Latent fibers were simulated with low-density fiberglass. The material distribution (15% latent fiber, 85% latent particulate) follows NEI guidance.

4) Provide bases for the choice of surrogates.

SNC Response to 3.h.4:

Based on the results of the module tests, the worst case debris loading for RHR and CS suction strainer head loss is a high particulate, 100% fiber debris loading case. The worst-case 100% fiber condition was evaluated by test case S8+1M-100-2, and the results of that case were scaled to determine the plant head loss values.

Initial tests were performed with a debris type known as 'Min-K'. Test results with Min-K resulted in an unacceptable head loss; Min-K was subsequently removed from the plant, and testing repeated without it.

The prior VEGP sector test results indicated that the bounding condition for simulating plant LOCA debris-generation is 100% fiber and 100% particulate.

All coatings are conservatively assumed to fail as particulate.

Transco was used as a surrogate for Nukon because both are fiberglass insulations, and because the density of Transco (2.4 lb/ft^3) matches the density for Nukon.

ElectroCarb black silicon carbide size 800 from Electro Abrasives is used because it has a 10-micron diameter, which follows NEI guidance and is believed to be the limiting particle size for head loss, and has the same density as the qualified and unqualified coatings.

Latent particulate and other debris were simulated by the same black silicon carbide used to simulate coatings. Latent fibers were simulated with low-density fiberglass. The material distribution (15% latent fiber, 85% latent particulate) follows NEI guidance.

5) Describe and provide bases for coatings debris generation assumptions. e.g. describe how the quantity of paint debris was determined based on ZOI size for qualified and unqualified coatings.

SNC Response to 3.h.5:

In order to determine the amount of qualified coating debris generated at VEGP, structural and civil drawings were consulted. The bounding break location was determined from inspection of these drawings, then the total surface area of coated steel and concrete within a 4D ZOI of the break location was calculated. The maximum allowable coating thickness, per the plant coating specification, was then applied to this surface area to determine the total coating debris volume. A

15% margin was added to the total to account for miscellaneous surfaces that were not otherwise accounted for, such as hand-rails, kick-plates, ladders and small supports.

The unqualified coating debris volume was based on 15,000 square feet of unqualified coating area. This value includes sufficient margin to allow future increase in unqualified coating area at both units without necessitating reanalysis of sump strainer design margin. The area total is divided into 85% steel surfaces and 15% concrete surfaces. This division is based on the experience of the plant coating specialist who determined that approximately 90% of the unqualified coatings are on steel. However, since the coating thickness on concrete surfaces is greater than on steel surfaces, it is conservative to over-estimate the unqualified concrete surfaces and under-estimate the unqualified steel surfaces. The maximum thicknesses allowable per the plant specification are used for both concrete and steel surfaces (17 mils for steel surfaces and 51.75 mils for concrete surfaces).

The amount of coating debris generated at VEGP is indicated in the following table.

Table 3h-1: Coating Debris

Debris Type	Units	Break S1	Break S2	Break S3	Break S8
QUALIFIED COATINGS					
Steel Coatings	[ft^3]	6.75	6.75	6.75	6.75
Concrete Coatings	[ft^3]	0.25	0.25	0.25	0.25
UNQUALIFIED COATINGS	[ft^3]	27.8	27.8	27.8	27.8

6) Describe what debris characteristics were assumed, i.e., chips, particulate, size distribution and proved bases for the assumptions.

SNC Response to 3.h.6:

In accordance with the guidance provided in the NEI (Reference 2) and SER (Reference 3) documents, all coating debris was treated as particulate and therefore transported entirely to the sump strainer.

7) Describe any ongoing containment coating condition assessment program.

SNC Response to 3.h.7 from FNP:

SNC conducts condition assessments of coatings inside containment every outage as a repetitive task under the site work control system. As localized areas of degraded coatings are identified, those areas are evaluated and scheduled for repair or replacement, as necessary. The periodic condition assessments, and the resulting repair/replacement activities, assure that the amount of coatings that may be susceptible to detachment from the substrate during a LOCA event is minimized.

3.i Debris Source Term Refinements

1) A summary of the containment housekeeping programmatic controls in place to control or reduce the latent debris burden. Specifically for RMI/low-fiber plants, provide a description of programmatic controls to maintain the latent debris fiber source term into the future to ensure assumptions and conclusions regarding inability to form a thin bed of fibrous debris remain valid.

SNC Response to 3.i.1:

SNC procedure, "Foreign Material Exclusion Program," establishes the administrative controls and personnel responsibilities for the Foreign Material Exclusion (FME) program. This procedure places emphasis on the FME program and controls. The procedure describes methods for controlling and accounting for material, tools, parts and other foreign material to preclude their uncontrolled introduction into an open or breached system during work activities. This procedure also provide guidance for establishing and maintaining system cleanliness, recovering from an intrusion of foreign material and re-establishing system cleanliness requirements.

Additionally, procedure, "Containment Exit Inspection," provides detailed guidance for containment inspection to ensure no loose debris (rags, trash, clothing, etc.) is present in the containment which could be transported to the containment sump and cause restriction of pump suctions during LOCA conditions. This procedure contains an extensive checklist detailing all areas of containment that must be inspected for cleanliness prior to plant startup after each outage.

Procedure, "Containment Entry," establishes guidance to inventory and control items carried into containment during non-outage entries. This procedure ensures that no loose debris (rags, trash, clothing, etc.) is present in the containment which could be transported to the containment sump and cause restriction of pump suctions during LOCA conditions.

2) A summary of the foreign material exclusion programmatic controls in place to control the introduction of foreign material into the containment.

   SNC Response to 3.i.2:

   See response to 3.i.1 above.

3) A description of how permanent plant changes inside containment are programmatically controlled so as to not change the analytical assumptions and numerical inputs of the licensee analyses supporting the conclusion that the reactor plant remains in compliance with 10 CFR 50.46 and related regulatory requirements.

   SNC Response to 3.i.3:

   An enhancement to the Design Input Process will be made that is part of the Design Change Procedure. This change introduces a requirement to review the impact of a proposed change on the documentation that forms the design basis for the response to Generic Letter 2004-02. The specific areas that are addressed are:

   - Insulation inside containment
   - Coatings inside containment
   - Inactive volumes in containment
   - Labels inside containment
   - Structural changes (i.e., Choke points) in containment
   - Downstream Effects (piping components downstream of the ECCS Sump strainers)

   Inclusion in the Design Input Process will ensure all design changes consider these attributes during the design process.

4) A description of how maintenance activities including associated temporary changes are assessed and managed in accordance with the Maintenance Rule, 10 CFR 50.65.

   SNC Response to 3.i.4:

   Maintenance activities, including temporary changes are subject to the provisions of 10 CFR 50.65(a)(4) as well as VEGP TS. SNC fleet procedures also provide guidance such as the 50.59 Review Process procedure, which provides details and guidance on maintenance activities and temporary alternations, the on-line work control process procedure, which establishes the administrative controls for performing on-line maintenance of structures, systems, components (SSC) in order to enhance overall plant safety and reliability, and the

temporary modifications procedure.

5) If any of the following suggested design and operational refinements given in the guidance report (guidance report, Section 5) and SE (SE, Section 5.1) were used, summarize the application of the refinements:

   A) Recent or planned insulation change-outs in the containment which will reduce the debris burden at the sump strainers
   B) Any actions taken to modify existing insulation (e.g., jacketing or banding) to reduce the debris burden at the sump strainers
   C) Modifications to equipment or systems conducted to reduce the debris burden at the sump strainers
   D) Actions taken to modify or improve the containment coatings program

   SNC Response to 3.i.5:

   A) All Min-K within the Large Break LOCA ZOI has been removed, thus reducing the debris burden at the sump strainer.

   B, C, D) None of these suggested design and operational refinements were used in the VEGP evaluation.

3.j Screen Modification Package

1) Provide a description of the major features of the sump screen design modification.

   SNC Response to 3.j.1:

   The strainers for RHR and CS consist of four parallel modular vertically stacked disk strainers connected to a plenum installed over each sump. The RHR strainers are composed of a set of four strainers per sump, each consisting of 18 stacked disks that are 30” L X 30” W X 53.75” H and provide a total of approximately 765 ft² of perforated plate surface area and 179 ft² of circumscribed surface area per sump. The CS strainers are also composed of a set of four strainers per sump, each consisting of 14 stacked disks that are 30” L X 30” W X 41.75” H and provide approximately a total of 590 ft² of perforated plate surface area and 139 ft² of circumscribed surface area per sump.

Figure 3.j.1-1 Containment Spray Screen

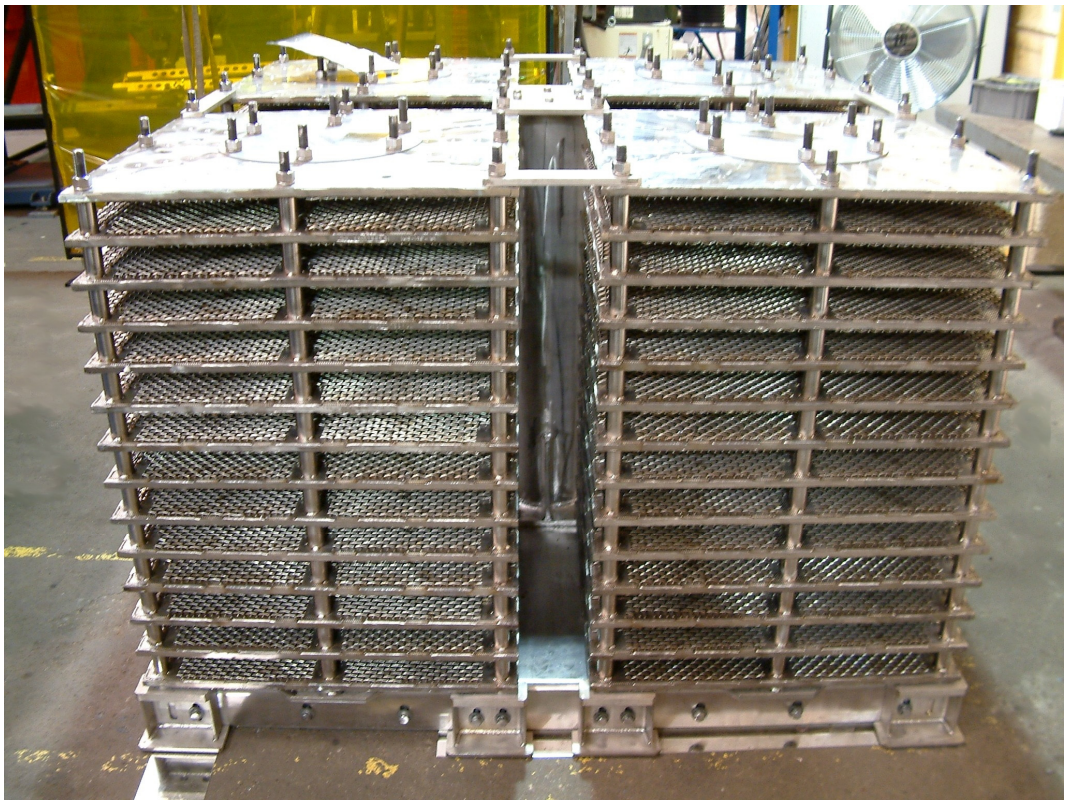

2) Provide a list of any modifications, such as reroute of piping and other components, relocation of supports, addition of whip restraints and missile shields, etc., necessitated by the sump strainer modifications.

SNC Response to 3.j.2:

- Replacement of Min-K insulation with Nukon
- Installation of new and replacement of existing ECCS flow orifices (Unit 2 complete, Unit 1 to be installed spring 2008 outage) to allow new ECCS throttle valve settings
- Cage Assembly vortex suppressors installed in the sumps removed
- Temperature elements for the Units 1 & 2 RHR sumps replaced and relocated
- Two conduit interferences at the Unit 2 RHR Sump Train A Screen rerouted through an area outside of the sump screen envelope
- Three electrical interferences for the new Unit 2 Containment Spray Sump Train A Screen relocated/rerouted through an area outside of the sump screen envelope.

3.k Sump Structural Analysis

1) Summarize the design inputs, design codes, loads, and load combinations utilized for the sump strainer structural analysis.

SNC Response to 3.k.1:

Design Codes
(1) American Society of Mechanical Engineers (ASME) Boiler and Pressure Vessel Code, Section III, Subsection NC and ND, 1989 Edition.

(2) American Society of Mechanical Engineers (ASME) Boiler and Pressure Vessel Code, Section III, Appendix I, 1989 Edition, Table I-6.0 for Modulus of Elasticity, Table I-5.0 for thermal expansion, and Table I-7.2 for allowable stress (S).

Material Properties
The Material properties come from the ASME Code and are tabulated in Table 3.k.1-1 below.

Table 3.k.1-1 Material Properties

Material / property	**@ Room Temperature (70°F)**	**@ Maximum Water Temperature (250°F)**
SA-240 Type SS304 (Strainer)		
E, Elastic modulus, psi	28.3E6	27.45E6
Coefficient of thermal expansion, in/in/^{o}F	8.6E-6	8.995E-6
Poisson's ratio	0.3	0.3
Density	0.283	
SA-479 Type SS410 (Tie Rod)		
E, Elastic modulus, psi	28.3E6	27.45E6
Coefficient of thermal expansion, in/in/^{o}F	5.9E-6	6.1E-6

Load Combinations

Table 3.k.1-2 shows the load combinations specified for the VEGP passive suction strainer design. The analyzed condition Pcr + WD + OBE is the bounding load combination in comparison to Pcr + WD.

Table 3.k.1-2 Load Combinations for VEGP Strainer Design

Strainer Assembly	Load Combination
Design	W + Po + OBE1
Level B	WD + Pd + OBE2 +TEmax + Pcr
Level D	WD + Pd + SSE2 + Pcr
Support Structure	
Design	W + Po + OBE1
Level B	WD + Pd + OBE2 +TEmax
Level D	WD + Pd + SSE2

Nomenclature:
W - Weight (Dry strainer Assembly Weight)
WD - Weight + Debris Weight + Hydrodynamic Mass (LOCA Event with Strainer in Water)
Pcr - Crush Pressure (During Suction Strainer Operation in Water Post LOCA)
Pd - Design Pressure (LOCA Event) + Water Head (Strainer Open System)
Po - Design Pressure (Strainer Open System)
OBE1 - Operating Basis Earthquake, (Inertia Load in Air)
OBE2 - Operating Basis Earthquake, (Inertia Load with Strainer in Water - Include Debris Weight + Hydrodynamic Mass)
TEmax - Thermal Expansion (Accident Condition)
SSE1 - Safe Shutdown Earthquake (Inertia Load with Strainer in Air)
SSE2 - Safe Shutdown Earthquake (Inertia Load with Strainer in Water-Include Debris Weight + Hydrodynamic Mass)

The seismic loads are based on the lateral and vertical inertial accelerations of the response spectrum according to the first mode of frequency of the strainer assembly in water. Conservatively, the same value is applied when the strainer is operating in air (Design Condition), since the strainer first mode frequency is higher in air than in water, providing lower G values from the seismic response spectrum. The design pressure, Po or Pd, has no impact on the system because the strainer is an open system. The typical RHR strainer model in air, W, is calculated to weigh 7150 lbs. The strainer assembly model in water, WD, is calculated to be 10,655 lbs with debris weight of 1654 lbs and hydrodynamic mass of 1851 lbs. The RHR Train B strainer model has a WD of 11,256 lbs compared to 10,655 lbs for the typical RHR strainer. The hydrodynamic mass and debris weight are assumed to be distributed evenly and are added to the strainer finite element model by adjusting the density of the material.

A combined load table for the strainer component evaluation is summarized in Table 3.k.1-3.

For the design load case, the strainer weight in air or 1G is combined with the OBE vertical acceleration for a combined loading of 1.375G

vertically. In addition, OBE horizontal acceleration of 0.27G is applied in both X and Y lateral directions. For the Level B load case, the strainer weight in water including debris and hydrodynamic mass or 1G is combined with the OBE vertical acceleration for a combined loading of 1.375G vertically. In addition, OBE horizontal acceleration of 0.27G is applied in both X and Y lateral directions as well as crush pressure and thermal loading. For the Level D load case, the strainer weight in water including debris and hydrodynamic mass or 1G is combined with SSE vertical acceleration for a combined loading of 1.6G vertically. In addition, SSE horizontal acceleration of 0.4125G is applied in both X and Y lateral directions as well as crush pressure. This load table provides the combined loading for the strainer components stress analysis.

Table 3.k.1-3 Load Table for the VEGP Strainer Design

Strainer Assembly	Load Combination	Inertia Z (G)	Inertia X (G)	Inertia Y (G)	Pcr (psi)	Temp** (°F)
Design Level B	W + Po + OBE1	1.375	0.27	0.27		
	WD + Pd + OBE2 +TEmax + Pcr	1.375	0.27	0.27	4.46*	180
Level D	WD + Pd + SSE2 + Pcr	1.6	0.4125	0.4125	4.46*	

*equivalent to 10.3 ft of head loss
**Stress free temperature is assumed to be 70°F, ΔT = (250-70)°F = 180°F
NOTE: Axis Orientation: Z Vertical, X & Y Lateral OBE/SSE is denoted as OBE2/SSE2.

Modal Analysis
Modal analyses were performed using the suction strainer finite element models. Modal results were obtained for the dry strainer and for the wet strainer with added debris weight and hydrodynamic mass during LOCA and post LOCA events. The strainer structural mass and natural frequencies are calculated for the first four modes and are summarized in Table 3.k.1-4.

Table 3.k.1-4 Replacement Strainer Weight and Frequency

Typical RHR Strainer in Air	W=7150 lbs
Mode 1	37.311 Hz
Mode 2	37.722 Hz
Mode 3	39.240 Hz
Mode 4	85.327 Hz
Typical RHR Strainer in Water	WD=10655 lbs
Mode 1	30.566 Hz
Mode 2	30.902 Hz
Mode 3	32.146 Hz
Mode 4	69.901 Hz
RHR Train B Strainer in Water	WD=11256 lbs
Mode 1	31.421 Hz
Mode 2	32.037 Hz
Mode 3	33.426 Hz
Mode 4	68.966 Hz

Load Application

Loads used in the stress analysis of the strainer models include the weight of the strainer assembly, hydrodynamic mass and debris mass, the crush pressure due to suction strainer operation, and the lateral and vertical inertial accelerations of Response Spectrum (OBE & SSE) corresponding to the first mode frequency of strainer assembly in water.

The crush pressure is applied on the top and bottom surfaces of the disk sets accounting for debris blockage. The weight of the strainer assembly model in water (W_D) is the sum of the weight of the strainer assembly in air (W), the debris weight and the hydrodynamic mass. The debris and hydrodynamic mass are uniformly distributed over the strainer assembly and support for mode shape and stress analysis. The crush pressure is applied on the plenum for Level D load case.

The ASME Code combination stress limits are summarized in Tables 3.k.1-5 and 6.

Table 3.k.1-5 Stress Limits for Strainer Components (250°F)

Service Level	Stress Category	Stress Limit (ksi)	
Design	P_m $P_m + P_b$	S 1.5 S	17.15 25.725
Service Level B	P_m $P_m + P_b$ P_m* $P_m + P_b$+Q*	1.1 S 1.65 S S 3Sm	18.865 28.3 16.35 69.9
Service Level D	P_m $P_m + P_b$	2.0 S 2.4 S	34.3 41.16

S: 17,150 psi for SS304
Sm: 23,300 psi for SS410
*Apply to tie rods

Table 3.k.1-6 Weld Stress Limits (250°F)

Type	Service Level	Stress Category	Stress Limit (psi) SS304,psi	
fillet	ND-3929 & ND-5260*	Shear	0.85x0.7xS	10,200
plug	ND-3929 & ND-5260*	Shear	0.65x0.8xS	8,918

S: 17,150 psi for SS304
* No special weld inspection requirements. VT-visual test inspection will be performed.

2) Summarize the structural qualification results and design margins for the various components of the sump strainer structural assembly.

SNC Response to 3.k.2:

Table 3.k.2-1 Stress Ratio Summary for Strainer Components Based on ASME Code Subsection NC

Component	Service Level	Stress Ratio*
Perforated Plates	Design - RHR model	18.55
Fingers	Design - RHR model	21.10
Finger Frames	Design - RHR model	40.70
Perforated Spacers	Design - RHR model	17.23
Center Post	Design - RHR model	39.27
Connecting Plates	Design - RHR model	41.69
Support Base	Design - RHR model	16.40
Base Frame	Design - RHR model	16.84
I-Beams	Design - RHR model	16.40

Perforated Plates	Level B - RHR model	2.30
Fingers	Level B - RHR model	3.65
Finger Frames	Level B - RHR model	13.78
Perforated Spacers	Level B - RHR model	10.49
Center Post	Level B - RHR model	26.13
Connecting Plates	Level B - RHR model	14.63
Support Base	Level B - RHR model	9.58
Base Frame	Level B - RHR model	9.58
I-Beams	Level B - RHR model	18.04
Tie Rods	Level B - RHR model	2.38
Perforated Plates	Level D - RHR model	3.33
Fingers	Level D - RHR model	5.30
Finger Frames	Level D - RHR model	19.83
Perforated Spacers	Level D - RHR model	12.44
Center Post	Level D - RHR model	30.11
Connecting Plates	Level D - RHR model	21.09
Support Base	Level D - RHR model	14.96
Base Frame	Level D - RHR model	14.96
I-Beams	Level D - RHR model	14.36
Perforated Plates	Level D - RHR Train B model	3.35
Fingers & Frames	Level D - RHR Train B model	5.21
Perforated Spacers	Level D - RHR Train B model	10.67
Center Post	Level D - RHR Train B model	26.78
Connecting Plates	Level D - RHR Train B model	20.47
Support Base	Level D - RHR Train B model	7.16
Base Frame	Level D - RHR Train B model	9.97
I-Beams	Level D - RHR Train B model	9.40

* Stress Ratio = ASME Code Stress Limit / Calculated Max Stress

Table 3.k.2-2 Stress Summary for Welds based on Service Level D Load

Weld Location (psi)	Weld Stress (psi)	Allowable Stress**	Stress Ratio*
Perforated Plate to Finger	3708	8918	2.4
Perforated Plate to Frame	9016	10,200	1.13

* Stress Ratio = ASME Code Stress Limit / Calculated Max Stress
** Conservative Level A Stress Limits, ASME Code Section III, Subsection ND-3923 at 250°F

The ASME Code combination stress limits are summarized in Tables 3.k.2-3 and 3.k.2-4.

Table 3.k.2-3 Stress Limits for Strainer Components (250°F)

Service Level	Stress Category	Stress Limit (ksi)	
Design	Pm Pm + Pb	S 1.5 S	17.15 25.725
Service Level B	Pm Pm + Pb Pm* Pm + Pb+Q*	1.1 S 1.65 S S 3 Sm	18.865 28.3 16.35 69.9
Service Level D	Pm Pm + Pb	2.0 S 2.4 S	34.3 41.16

S: 17,150 psi for SS304
Sm: 23,300 psi for SS410
*Apply to tie rods

Table 3.k.2-4 Weld Stress Limits (250°F)

Type	Service Level	Stress Category	Stress Limit (psi) SS304,psi	
fillet	**ND-3929 & ND-5260***	Shear	0.85 x 0.7 x S	10,200
plug	**ND-3929 & ND-5260***	Shear	0.65 x 0.8 x S	8,918

S: 17,150 psi for SS304
* No special weld inspection requirements. VT-visual test inspection will be performed.

Table 3.k.2-5 Typical RHR Strainer Stress ratios for Design Level

Component	Stress Category	Max Stress Intensity (psi)	Stress Limit (psi)	Stress Ratio*
Perforated Plates	Pm	less than 1,387	17,150	12.36 minimum
	Pm+Pb	1,387	25,725	18.55
Fingers	Pm	less than 1,219	17,150	14.07 minimum
	Pm+Pb	1,219	25,725	21.10
Finger Frames	Pm	less than 632	17,150	27.14 minimum
	Pm+Pb	632	25,725	40.70
Perforated Spacers	Pm	less than 1,493	17,150	11.49 minimum
	Pm+Pb	1,493	26,250	17.58
Center Post	Pm	less than 655	17,150	26.18 minimum
	Pm+Pb	655	25,725	39.27
Connecting Plates	Pm	less than 617	17,150	27.80 minimum
	Pm+Pb	617	25,725	41.69
Support Base	Pm	less than 6,855	17,150	2.50 minimum
	Pm+Pb	less than 6,855	25,725	3.75 minimum
Base Frame	Pm	less than 6,855	17,150	2.50 minimum
	Pm+Pb	less than 6,855	25,725	3.75 minimum
I-Beams	Pm	less than 5,684	17,150	3.02 minimum
	Pm+Pb	less than 5,684	25,725	4.53 minimum

Table 3.k.2-6 Typical RHR Strainer Stress Ratios for Service Level B

Component	Stress Category	Max Stress Intensity (psi)	Stress Limit (psi)	Stress Ratio*
Perforated Plates	Pm	less than 12,298	18,865	1.53 minimum
	Pm+Pb	12,298	28,300	2.30
Fingers	Pm	less than 7,745	18,865	2.44 minimum
	Pm+Pb	7,745	28,300	3.65
Finger Frames	Pm	less than 2,053	18,865	9.19 minimum
	Pm+Pb	2,053	28,300	13.78
Perforated Spacers	Pm	less than 2,698	18,865	6.99 minimum
	Pm+Pb	2,698	28,300	10.49
Center Post	Pm	less than 1,083	18,865	17.42 minimum
	Pm+Pb	1,083	28,300	26.13
Connecting Plates	Pm	less than 1,934	18,865	9.75 minimum
	Pm+Pb	1,934	28,300	14.63
Support Base	Pm	less than 6,855	18,865	2.75 minimum
	Pm+Pb	less than 6,855	28,300	4.13 minimum
Base Frame	Pm	less than 6,855	18,865	2.75 minimum
	Pm+Pb	less than 6,855	28,300	4.13 minimum
I-Beams	Pm	less than 5,684	18,865	3.32 minimum
	Pm+Pb	less than 5,684	28,300	4.98 minimum
Tie Rods	Pm	16,452	16,530	1.00
	Pm+Pb+Q	29,400	69,900	2.38

*Stress Ratio = ASME Stress Limit / Calculated Max. Stress Intensity

Table 3.k.2-7 Typical RHR Strainer Stress Ratios for Service Level D

Component	Stress Category	Max Stress Intensity (psi)	Stress Limit (psi)	Stress Ratio*
Perforated Plates	Pm	less than 12,347	34,300	2.78 minimum
	Pm+Pb	12,347	41,160	3.33
Fingers	Pm	less than 7,764	34,300	4.42 minimum
	Pm+Pb	7,764	41,160	5.30
Finger Frames	Pm	less than 2,076	34,300	16.52 minimum
	Pm+Pb	2,076	41,160	19.83
Perforated Spacers	Pm	less than 3,308	34,300	10.37 minimum
	Pm+Pb	3,308	41,160	12.44
Center Post	Pm	less than 1,367	34,300	25.09 minimum
	Pm+Pb	1,367	41,160	30.11
Connecting Plates	Pm	less than 1,952	34,300	17.57 minimum
	Pm+Pb	1,952	41,160	21.09
Support Base	Pm	less than 6,855	34,300	5.00 minimum
	Pm+Pb	6,855	41,160	6.00
Base Frame	Pm	less than 6,855	34,300	5.00 minimum
	Pm+Pb	6,855	41,160	6.00
I-Beams	Pm	less than 5,684	34,300	6.03 minimum
	Pm+Pb	5,684	41,160	7.24

Table 3.k.2-8 RHR Train B Strainer Stress Ratios for Service Level D

Component	Stress Category	Max Stress Intensity (psi)	Stress Limit (psi)	Stress Ratio*
Perforated Plates	Pm	less than 12,289	34,300	2.79 minimum
	Pm+Pb	12,289	41,160	3.35
Fingers & Frames	Pm	less than 7,894	34,300	4.35 minimum
	Pm+Pb	7,894	41,160	5.21
Perforated Spacers	Pm	less than 3,856	34,300	8.90 minimum
	Pm+Pb	3,856	41,160	10.67
Center Post	Pm	less than 1,537	34,300	22.32 minimum
	Pm+Pb	1,537	41,160	26.78
Connecting Plates	Pm	less than 2,011	34,300	17.06 minimum
	Pm+Pb	2,011	41,160	20.47
Support Base	Pm	less than 5,750	34,300	5.97 minimum
	Pm+Pb	5,750	41,160	7.16
Base Frame	Pm	less than 4,130	34,300	8.31 minimum
	Pm+Pb	4,130	41,160	9.97
I-Beams	Pm	less than 4,380	34,300	7.83 minimum
	Pm+Pb	4,380	41,160	9.40

*Stress Ratio = ASME Stress Limit / Calculated Max. Stress Intensity

Weld Analysis

Since the finite element model with the typical RHR strainer configuration has slightly higher overall stress results, the ANSYS analysis results in this load case were used to calculate the load transfer through the welds. For a given weld location, the elements and corresponding nodes at the weld were selected on one side of the node and the ANSYS post-processor was used to calculate the forces transferred across the weld section. These forces were then used to calculate the stresses based on the weld section properties. If the welds consisted of more than one weld, then the group section properties were used.

Weld stresses were calculated for simultaneous application of loads for Service Levels D. These calculated stress values were compared with the ASME Code shear stress limits. The minimum weld stress ratios for all the weld locations are summarized in Table 2 in RAI 65.

For the welds between the fingers and perforated plate, robotic welding will be utilized to ensure a weld diameter of 3/16." At the worst stress intensity finger location, a net shear Fx of 115.8 lbs., a net shear Fy of 184 lbs. and a net tensile Fz of 184 lbs. are obtained between two sides of the finger.

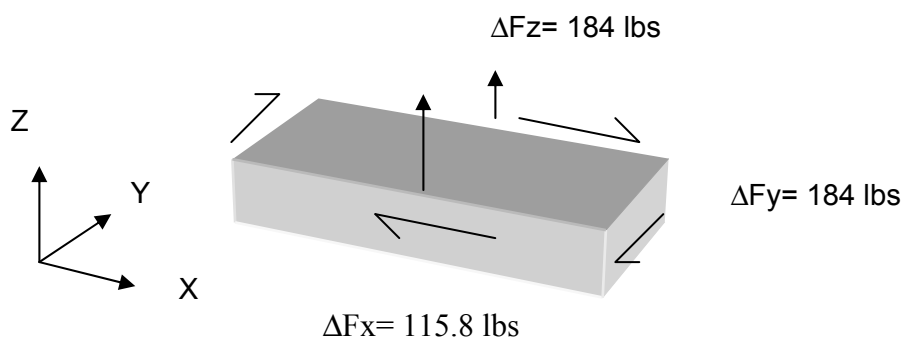

Considering a line of welds, net forces are reacted by the circular areas of the plug weld, Aw. The unbalanced Fz causes a moment of 30 in-lb and is reacted by the section modulus of the weld, Sw when the weld is treated as a line. The unbalanced Fx and Fy cause torsion and are reacted by the twisting property of the weld, Jw. Jw is large because the line of weld is approximately 8" long. The stresses caused by torsion are therefore negligible.

Weld load treated as a line:

$$f = \sqrt{(M/Sw + Fz/Aw)^2 + (Fx/Aw)^2 + (Fy/Aw)^2}$$

$Sa = f/Nt$ where Sa = 8918 psi and t = 0.078”

Five welds along each finger will satisfy the stress allowable of 8918 psi. The welds are to be distributed evenly along the finger.

Similarly, at the weld location between the finger frame and the perforated plate, a net shear Fx of 180 lbs., a net shear Fy of 325 lbs. and a net tensile Fz of 1437 lbs. are obtained between two sides of the frames. The moment from the unbalanced Fz is 566 in-lb and is reacted by Sw of 1200 in^2 for the square frame shape weld line. The fillet weld area, Aw, is 0.707 x t^2 with t equals to 0.078.” In addition, an intermittent weld has a knock down factor of 0.66 for weld length of 3” and pitch distance of 5.” The weld calculation shows that 18 inches of weld length is recommended along each edge of the disk. The fillet welds should cover corners and at finger protrusion areas. Based on a width of 0.070” for the weld and stress allowable of 10200 psi, the recommended intermittent welds should be 3” with 5” pitch.

Interface Load
Interface load at the existing 16 bolt locations from the finite element model with the typical RHR configuration are calculated and the total reaction load at the base frame is summarized in Table 3.k.2-8. The plenum pressure was not included in the table since the simplified bolt model consists of only inertial load.

Table 3.k.2-8 Summary of Reaction Forces at the Strainer Base Frame

	Fx (lbs)	Fy (lbs)	Fz (lbs)
W + OBE1	1931	1931	9835
W + SSE1	2949	2949	11440
WD + OBE2	2876	2876	14704
WD + SSE2 (downward)	4395	4395	17040
WD + SSE2 (upward)	4395	4395	4261

3) Summarize the evaluations performed for dynamic effects such as pipe whip, jet impingement, and missile impacts associated with high-energy line breaks (as applicable).

SNC Response to 3.k.3:

Due to the location of the strainers, there are no dynamic effects from high energy line breaks, pipe whip, jet impingement or missile impact that affect the strainers.

4) If a back flushing strategy is credited, provide a summary statement regarding the sump strainer structural analysis considering reverse flow.

SNC Response to 3.k.4:

Back flushing of the sump strainers, or any other active approach, is not credited in the VEGP analysis therefore; no structural analysis considering reverse flow is required.

3.l Upstream Effects

1) Summarize the evaluation of the flow paths from the postulated break locations and containment spray washdown to identify potential choke points in the flow field upstream of the sump.

SNC Response to 3.l.1:

Evaluations of containment, along with review of the CFD model, indicated no significant areas will become blocked with debris and hold up water during the sump recirculation phase. The area of the refueling cavity, which is the area around the reactor head that is flooded prior to fuel movement, is the only significant area in containment that can retain water during an event that requires containment spray. This area is drained by a large clear flow path that can not be easily blocked with debris.

The location of the postulated limiting LOCA is inside the secondary shield wall in the lower elevations of the containment. The flow path from this break area to the sump strainers is primarily through two labyrinth egress points through the shield wall. These walkways provide a large clear flow path from inside the shield wall to the screen area. There are also smaller openings through the shield wall for pipes but these are much smaller than the walkways, and any restriction of these would have minimal effect on the overall flow path from inside the shield wall to the strainers.

Containment spray washdown has a clear path to the containment sump area. Large sections of the flood on each level in containment

are covered with grating that allows the water to pass. Water that falls into the refueling cavity exits via the cavity drains to the sump.

2) Summarize measures taken to mitigate potential choke points.

SNC Response to 3.l.2:

No measures have been taken to mitigate choke points.

3) Summarize the evaluation of water holdup at installed curbs and/or debris interceptors.

SNC Response to 3.l.3:

There are no curbs or debris interceptors that provide water volume holdup in the VEGP containments.

4) Describe how potential blockage of reactor cavity and refueling cavity drains has been evaluated, including likelihood of blockage and amount of expected holdup.

SNC Response to 3.l.4:

The refueling cavity is drained by two 12-inch pipes. During refueling, these drains are secured by installing flanges. These flanges are removed prior to entry into mode 4 and above. The VEGP limiting break occurs under the operating deck and inside the secondary shield wall. This break would result in a torturous path for large debris to travel above the operating deck and land in the refueling cavity. Therefore, the clogging of the reactor cavity drains is minimized.

The drains into the area under the reactor (e.g. reactor cavity) could become blocked. There is no detrimental impact of this blockage as it would inhibit loss of water from the active ECCS sump to an inactive area beneath the vessel. The flooding analysis assumes this area floods during the event.

3.m Downstream Effects - Components and Systems

1) If NRC-approved methods were used (e.g., WCAP-16406-P with accompanying NRC SE), briefly summarize the application of the methods. Indicate where the approved methods were not used or exceptions were taken, and summarize the evaluation of those areas.

SNC Response to 3.m.1:

In a letter dated December 7, 2007, SNC submitted an extension request for Chemical Effects testing and analysis, and Downstream Effects (Components and Systems reanalysis, Fuel and Vessel

analysis. NRC approval was received in a letter dated December 19, 2007. The information in the extension request will be provided to the NRC by May 31, 2008.

2) Provide a summary and conclusions of downstream evaluations.

   SNC Response 3.m.2: See response to 3.m.1.

3) Provide a summary of design or operational changes made as a result of downstream evaluations.

   SNC Response to 3.m.3: See response to 3.m.1.

3.n Downstream Effects - Fuel and Vessel

1) Show that the in-vessel effects evaluation is consistent with, or bounded by, the industry generic guidance (WCAP-16793), as modified by NRC staff comments on that document. Briefly summarize the application of the methods. Indicate where the WCAP methods were not used or exceptions were taken, and summarize the evaluation of those areas.

   SNC Response to 3.n.1:

   In a letter dated December 7, 2007, SNC submitted an extension request for Chemical Effects testing and analysis, and Downstream Effects (Components and Systems reanalysis, Fuel and Vessel analysis.) NRC approval was received in a letter dated December 19, 2007. The information in the extension request will be provided to the NRC by May 31, 2008.

3.o Chemical Effects

1) Provide a summary of evaluation results that show that chemical precipitates formed in the post-LOCA containment environment, either by themselves or combined with debris, do not deposit at the sump screen to the extent that an unacceptable head loss results, or deposit downstream of the sump screen to the extent that long-term core cooling is unacceptably impeded. Content guidance for chemical effects is provided in Enclosure 3 to a letter from the NRC to NEI dated September 27, 2007 (ADAMS Accession No. ML0726007425).

   SNC Response to 3.o.1:

   In a letter dated December 7, 2007, SNC submitted an extension request for Chemical Effects testing and analysis, and Downstream Effects (Components and Systems reanalysis, Fuel and Vessel analysis.) NRC approval was received in a letter dated December 19,

2007. The information in the extension request will be provided to the NRC by May 31, 2008.

The following items are in response to the content guidance for chemical effects provided in Enclosure 3 to a letter from the NRC to NEI dated September 27, 2007 (ADAMS Accession No. ML0726007425).

2) 1.d.i Sufficient 'Clean' Strainer Area: Those licensees performing a simplified chemical effects analysis should justify the use of this simplified approach by providing the amount of debris determined to reach the strainer, the amount of bare strainer area and how it was determined, and any additional information that is needed to show why a more detailed chemical effects analysis is not needed.

   SNC Response to 3.o.2: Refer to response to 3.o.1 above.

3) 2.d.i Debris Bed Formation: Licensees should discuss why the debris from the break location selected for plant-specific head loss testing with chemical precipitate yields the maximum head loss. For example, plant X has break location 1 that would produce maximum head loss without consideration of chemical effects. However, break location 2, with chemical effects considered, produces greater head loss than break location 1. Therefore, the debris for head loss testing with chemical effects was based on break location 2.

   SNC Response to 3.o.3: Refer to response to 3.o.1 above.

4) 3.d.i Plant Specific Materials and Buffers: Licensees should provide their assumptions (and basis for the assumptions) used to determine chemical effects loading: pH range, temperature profile, duration of containment spray, and materials expected to contribute to chemical effects.

   SNC Response to 3.o.4: Refer to response to 3.o.1 above.

5) 4.d.i Approach to Determine Chemical Source Term (Decision Point): Licensees should identify the vendor who performed plant-specific chemical effects testing.

   SNC Response to 3.o.5: Refer to response to 3.o.1 above.

6) 5. Separate Effects Decision (Decision Point): State which method of addressing plant-specific chemical effects is used.

   SNC Response to 3.o.6: Refer to response to 3.o.1 above.

7) 6.d.i AECL Model: Since the NRC is not currently aware of the testing approach, the NRC expects licensees using it to provide a

detailed discussion of the chemical effects evaluation process along with head loss test results.

SNC Response to 3.o.7: Refer to response to 3.o.1 above.

8) 6.d.ii AECL Model: Licensees should provide the chemical identities and amounts of predicted plant-specific precipitates.

SNC Response to 3.o.8 Refer to response to 3.o.1 above.

9) 7d.i WCAP Base Model: For licensees proceeding from block 7 to diamond 10 in the Figure 1 flow chart [in Enclosure 3 to a letter from the NRC to NEI dated September 27, 2007 (ADAMS Accession No. ML0726007425)], justify any deviations from the WCAP base model spreadsheet (i.e., any plant specific refinements) and describe how any exceptions to the base model spreadsheet affected the amount of chemical precipitate predicted.

SNC Response to 3.o.9: Refer to response to 3.o.1 above.

10) 7.d.ii WCAP Base Model: List the type (e.g., AlOOH) and amount of predicted plant-specific precipitates.

SNC Response to 3.o.10: Refer to response to 3.o.1 above.

11) 8.d. WCAP Refinements: State whether refinements to WCAP-16530-NP were utilized in the chemical effects analysis.

SNC Response to 3.o.11: Refer to response to 3.o.1 above.

12) 9.d.i Solubility of Phosphates, Silicates and Al Alloys: Licensees should clearly identify any refinements (plant-specific inputs) to the base WCAP-16530 model and justify why the plant-specific refinement is valid.

SNC Response to 3.o.12: Refer to response to 3.o.1 above.

13) 9.d.ii Solubility of Phosphates, Silicates and Al Alloys: For crediting inhibition of aluminum that is not submerged, licensees should provide the substantiation for the following: (1) the threshold concentration of silica or phosphate needed to passivate aluminum, (2) the time needed to reach a phosphate or silicate level in the pool that would result in aluminum passivation, and (3) the amount of containment spray time (following the achieved threshold of chemicals) before aluminum that is sprayed is assumed to be passivated.

SNC Response to 3.o.13: Refer to response to 3.o.1 above.

14) 9.d.iii Solubility of Phosphates, Silicates and Al Alloys: For any attempts to credit solubility (including performing integrated testing), licensees should provide the technical basis that supports extrapolating solubility test data to plant-specific conditions. In addition, licensees should indicate why the overall chemical effects evaluation remains conservative when crediting solubility given that small amount of chemical precipitate can produce significant increases in head loss.

    SNC Response to 3.o.14: Refer to response to 3.o.1 above.

15) 9.d.iv Solubility of Phosphates, Silicates and Al Alloys: Licensees should list the type (e.g., AlOOH) and amount of predicted plant specific precipitates.

    SNC Response to 3.o.15: Refer to response to 3.o.1 above.

16) 10. Precipitate Generation (Decision Point): State whether precipitates are formed by chemical injection into a flowing test loop or whether the precipitates are formed in a separate mixing tank.

    SNC Response to 3.o.16: Refer to response to 3.o.1 above.

17) 11.d.i Chemical Injection into the Loop: Licensees should provide the one-hour settled volume (e.g., 80 ml of 100 ml solution remained cloudy) for precipitate prepared with the same sequence as with the plant-specific, in-situ chemical injection.

    SNC Response to 3.o.17: Refer to response to 3.o.1 above.

18) 11.d.ii Chemical Injection into the Loop: For plant-specific testing, the licensee should provide the amount of injected chemicals (e.g., aluminum), the percentage that precipitates, and the percentage that remains dissolved during testing.

    SNC Response to 3.o.18: Refer to response to 3.o.1 above.

19) 11.d.iii Chemical Injection into the Loop: Licensees should indicate the amount of precipitate that was added to the test for the head loss of record (i.e., 100 percent 140 percent).

    SNC Response to 3.o.19: Refer to response to 3.o.1 above.

20) 12.d.i Pre-Mix in Tank: Licensees should discuss any exceptions taken to the procedure recommended for surrogate precipitate formation in WCAP-16530.

    SNC Response to 3.o.20: Refer to response to 3.o.1 above.

21) 13. Technical Approach to Debris Transport (Decision Point): State whether near-field settlement is credited or not.

SNC Response to 3.o.21: Refer to response to 3.o.1 above.

22) 14.d.i Integrated Head Loss Test with Near-Field Settlement Credit: Licensees should provide the one-hour or two-hour precipitate settlement values measured within 24 hours of head loss testing.

SNC Response to 3.o.22: Refer to response to 3.o.1 above.

23) 14.d.ii Integrated Head Loss Test with Near-Field Settlement Credit: Licensees should provide a best estimate of the amount of surrogate chemical debris that settles away from the strainer during the test.

SNC Response to 3.o.23: Refer to response to 3.o.1 above.

24) 15.d.i Head Loss Testing Without Near Field Settlement Credit: Licensees should provide an estimate of the amount of debris and precipitate that remains on the tank/flume floor at the conclusion of the test and justify why the settlement is acceptable.

SNC Response to 3.o.24: Refer to response to 3.o.1 above.

25) 15.d.ii Head Loss Testing Without Near Field Settlement Credit: Licensees should provide the one-hour or two-hour precipitate settlement values measured and the timing of the measurement relative to the start of head loss testing (e.g., within 24 hours).

SNC Response to 3.o.25: Refer to response to 3.o.1 above.

26) 16.d. Test Termination Criteria: Provide the test termination criteria.

SNC Response to 3.o.26: Refer to response to 3.o.1 above.

27) 17.d.i Data Analysis: Licensees should provide a copy of the pressure drop curve(s) as a function of time for the testing of record.

SNC Response to 3.o.27: Refer to response to 3.o.1 above.

28) 17.d.ii Data Analysis: Licensees should explain any extrapolation methods used for data analysis.

SNC Response to 3.o.28: Refer to response to 3.o.1 above.

29) 18.d. Integral Generation (Alion):

SNC Response to 3.o.29: Refer to response to 3.o.1 above.

30) 19.c.i Tank Scaling / Bed Formation: Explain how scaling factors for the test facilities are representative or conservative relative to plant-specific values.

SNC Response to 3.o.30: Refer to response to 3.o.1 above.

31) 19.c.ii Tank Scaling / Bed Formation: Explain how bed formation is representative of that expected for the size of materials and debris that is formed in the plant specific evaluation.

SNC Response to 3.o.31: Refer to response to 3.o.1 above.

32) 20.c.i Tank Transport: Explain how the transport of chemicals and debris in the testing facility is representative or conservative with regard to the expected flow and transport in the plant-specific conditions.

SNC Response to 3.o.32: Refer to response to 3.o.1 above.

33) 21.d.i 30-Day Integrated Head Loss Test: Licensees should provide the plant-specific test conditions and the basis for why these test conditions and test results provide for a conservative chemical effects evaluation.

SNC Response to 3.o.33: Refer to response to 3.o.1 above.

34) 22.d.i Data Analysis Bump Up Factor: Licensees should provide the details and the technical basis that show why the bump-up factor from the particular debris bed in the test is appropriate for application to other debris beds.

SNC Response to 3.o.34: Refer to response to 3.o.1 above.

3.p Licensing Basis

1) Provide the information requested in GL 04-02 Requested Information Item 2(e) regarding changes to the plant licensing basis. The effective date for changes to the licensing basis should be specified. This date should correspond to that specified in the 10 CFR 50.59 evaluation for the change to the licensing basis.

SNC Response to 3.p.1:

Proposed changes to TS 3.3.2, TS 3.5.4, and SR 3.5.4.2 are summarized below.

TS 3.3.2, "ESFAS Instrumentation," Table 3.3.2-1 (page 6 of 7), "Engineered Safety Feature Actuation System Instrumentation," Function 7.b:

The Nominal Trip Setpoint (NTS) for Function 7, "Semi-automatic Switchover to Containment Sump," item b, "Refueling Water Storage Tank (RWST) Level - Low Low," will be revised from "275.3 in" to "213.5 in" and the AV will be revised from "≥ 264.9 in." to "≤ 216.6 in. and ≥ 210.4 in." The AV is being changed from a one-sided value to a two-sided value. Currently, the one-sided AV is in the decreasing direction from the NTS, which decreases operator action time to complete the switchover to the containment sump decreases. This remains true for the revised NTS, so an appropriate AV in the decreasing direction is retained. However, because the primary purpose of the proposed change to the NTS is to increase the volume of water in containment at the initiation of ECCS suction switchover by delaying the initiation of switchover, an AV in the increasing direction of the NTS is necessary as well.

TS 3.5.4, "Refueling Water Storage Tank (RWST)," SR 3.5.4.2:

The RWST borated water volume to be verified in the SR will be changed from a value of "> 631,478 gallons" to "> 686,000 gallons." The 631,478 gallons and 686,000 gallons represent actual contained borated water volumes in the RWST.

Southern Nuclear Operating Company requested approval of the proposed license amendments by April 14, 2008. The proposed changes would be implemented by May 31, 2008.

The FSAR will be revised to reflect any new values or configurations, as required, as part of the final design change process to document the new design and licensing.

4.0 References

General References

1. NRC Generic Letter (GL) 2004-02, "Potential Impact of Debris Blockage on Emergency Recirculation during Design Basis Accidents for Pressurized-Water Reactors," dated September 13, 2004

2. Nuclear Energy Institute (NEI) document NEI 04-07 Revision 0, December 2004, "Pressurized Water Reactor Sump Performance Evaluation Methodology"

3. Safety Evaluation by the Office of Nuclear Reactor Regulation Related to NRC Generic Letter 2004-02, Nuclear Energy Institute Guidance Report (Proposed Document Number NEI 04-07), "Pressurized Water Reactor Sump Performance Evaluation Methodology," Issued December 6, 2004
   NRC Bulletin 2003-01, “Potential Impact of Debris Blockage on Emergency Sump Recirculation at Pressurized Water Reactors,” dated June 9, 2003

4. NRC Bulletin 2003-01, “Request for Additional Information, Bulletin 2003-01 Potential Impact of Debris Blockage on Emergency Sump Recirculation at Pressurized Water Reactors” for Joseph M. Farley Nuclear Plant, Units 1 and 2, Docket Nos. 50-348 and 50-364

5. NRC Bulletin 2003-01, “Requests for Additional Information, Bulletin 2003-01, Potential Impact of Debris Blockage on Emergency Sump Recirculation at Pressurized Water Reactors” for VEGP Electric Generating Plant, Units 1 and 2, Docket Nos. 50-424 and 50-425

6. 60 Day Response to NRC Bulletin 2003-01
   SNC-to-NRC NL-03-1514 dated 8/07/2003
   Combined SNC response for Joseph M. Farley Nuclear Plant (FNP) and Vogtle Electric Generating Plant (VEGP) as required by NRC Bulletin 2003-01, "Potential Impact of Debris Blockage on Emergency Sump Recirculation at Pressurized Water Reactors"

7. Response to a Request for Additional Information on NRC Bulletin 2003-01
   NRC-to-SNC (NL-04-2013) dated 10/29/2004
   Combined SNC response for Joseph M. Farley Nuclear Plant (FNP) and Vogtle Electric Generating Plant (VEGP) as required by NRC Bulletin 2003-01, "Potential Impact of Debris Blockage on Emergency Sump Recirculation at Pressurized Water Reactors"

8. Revised Response to a Request for Additional Information on NRC Bulletin 2003-01
   NRC-to-SNC (NL-05-1207) dated 7/22/2005

Combined SNC response for Joseph M. Farley Nuclear Plant (FNP) and Vogtle Electric Generating Plant (VEGP) as required by NRC Bulletin 2003-01, "Potential Impact of Debris Blockage on Emergency Sump Recirculation at Pressurized Water Reactors - Revision 1"

9. NRC-to-SNC (NL-05-1633) dated 8/26/2005
   Vogtle Electric Generating Plant, Units 1 & 2 - Response to NRC Bulletin 2003-01, “Potential Impact of Debris Blockage on Emergency Sump Recirculation at Pressurized Water Reactors” (Tac Nos. MB9625 and MB9626)

10. 90 day response to GL 2004-02
    SNC-to-NRC NL-05-0290 dated 2/25/2005
    Joseph M. Farley Nuclear Plant, Vogtle Electric Generating Plant Response to NRC Generic Letter 2004-02
    "Potential Impact of Debris Blockage on Emergency Recirculation During Design Basis Accidents at Pressurized-Water Reactors"

11. Response (VEGP and FNP) to GL 2004-02
    SNC-to-NRC NL-05-1264 dated 8/31/2005
    Combined SNC response for Joseph M. Farley Nuclear Plant (FNP) and Vogtle Electric Generating Plant (VEGP) as required by NRC Generic Letter 2004-02, "Potential Impact of Debris Blockage on Emergency Recirculation During Design Basis Accidents at Pressurized Water Reactors"

12. NRC Request for Additional Information
    NRC-to-SNC (NL-06-0279) dated 2/9/2006
    Vogtle Electric Generating Plant, Units 1 And 2, Request For Additional Information Re: Response To Generic Letter 2004-02, "Potential Impact Of Debris Blockage On Emergency Recirculation During Design-Basis Accidents At Pressurized Water Reactors" (TAC Nos. MC4727 and MC4728)

13. NRC-to-SNC (NL-06-0753) dated 3/28/2006
    Alternative Approach For Responding To The Nuclear Regulatory Commission Request For Additional Information Letter Re: Generic Letter 2004-02

14. VEGP 1st extension request to complete CAs (Unit 1 downstream effects) for GL 2004-02
    SNC-to-NRC (NL-06-1275) dated 6/22/06
    Vogtle Electric Generating Plant - Units 1 & 2 Request for Extension for Completing Corrective Actions for Generic Letter 2004-02, "Potential Impact of Debris Blockage on Emergency Recirculation During Design Basis Accidents at Pressurized-Water Reactors"

15. SNC-to-NRC (NL-06-1483) dated 7/28/2006
    Response to NRC RAI (6/30/06 phone call)on SNC Request for Extension for Completing Corrective Actions for Generic Letter 2004-02, “Potential Impact of Debris Blockage on Emergency Recirculation During Design Basis Accidents at Pressurized-Water Reactors”

16. NRC-to-SNC (NL-06-2055) dated 9/7/2006
    Vogtle Electric Genera1-Ing Plant, Unit 1, Approval Of Generic Letter 2004-02 Extension Request (SNC request dated 6/22/2006)

17. NRC-to-NEI (NL-06-2686) dated 11/14/2006
    Nuclear Regulatory Comm16310n Request For Additional Information To Pressurized Water Reactor Licensees Regarding Reponses To Generic Letter 2004-02

18. NRC-to-All Licenses (NL-07-0090) dated 1/4/2007
    Alternate Approach for Responding to the NRC request for Additional Information Letter Regarding GL 2004-02

19. SNC-to-NRC (NL-07-1969) dated 12/7/2007
    Vogtle Electric Generating Plant Units 1 and 2 Generic Letter 2004-02 Response Extension Request for completion of Chemical Effects testing and analysis, Downstream Effects analysis for Components - Systems, and Fuel - Vessel

20. NRC-to-SNC (NL-07-2367) dated 12/19/2007
    Vogtle Electric Generating Plant, Units 1 and 2 -Generic Letter 2004-02. "Potential Impact Of Debris Blockage On Emergency Recirculation During Design Basis Accidents At Pressurized-Water Reactors," Extension Request Approval (to May 31, 2008)

21. WCAP-16406-P Rev. 1, “Evaluation of Downstream Sump Debris Effects in Support of GSI-191”

22. WCAP-16793-NP Rev.0, "Evaluation of Long-Term Cooling Considering Particulate, Fibrous and Chemical Debris in the Recirculating Fluid"

23. WCAP-16568-P Rev. 0, "Jet Impingement Testing to Determine the Zone of Influence (ZOI) for DBA-Qualified / Acceptable Coatings"

24. WCAP-16710-P Rev. 0, ”Jet Impingement Testing to Determine the Zone of Influence (ZOI) of Min-K and NUKON® Insulation for Wolf Creek and Callaway Nuclear Operating Plants”

25. Regulatory Guide 1.82, "Water Sources for Long Term Recirculation Cooling Following a Loss of Coolant Accident," Revision 3, November 2003

26. NUREG-0800, "U.S. Nuclear Regulatory Commission Standard Review Plan," Section 3.6.2, "Determination of Rupture Locations and Dynamic Effects Associated with the Postulated Rupture of Piping," Revision 1, July 1981

27. NUREG/CR-2791, "Methodology for Evaluation of Insulation Debris Effects, Containment Emergency Sump Performance Unresolved Safety Issue A-43," Issued September 1982

28. NUREG/CR-3616, "Transport and Screen Blockage Characteristics of Reflective Metallic Insulation Materials," January 1984

29. NUREG/CR-6224, "Parametric Study of the Potential for BWR ECCS Strainer Blockage Due to LOCA Generated Debris, Final Report," Issued October 1995

30. NUREG/CR-6369, "Drywell Debris Transport Study, Final Report," Volume 1, Issued September 1999

31. NUREG/CR-6369, "Drywell Debris Transport Study: Experimental Work, Final Report," Volume 2, Issued September 1999

32. NUREG/CR-6369, "Drywell Debris Transport Study: Computational Work, Final Report," Volume 3, Issued September 1999

33. NUREG/CR-6762, Volume 1, "GSI-191 Technical Assessment: Parametric Evaluations for Pressurized Water Reactor Recirculation Sump Performance," Issued August 2002

34. NUREG/CR-6762, Volume 2, "GSI-191 Technical Assessment: Summary and Analysis of U.S. Pressurized Water Reactor Industry Survey Responses and Responses to GL 97-04," Issued August 2002

35. NUREG/CR-6762, Volume 3, "GSI-191 Technical Assessment: Development of Debris Generation Quantities in Support of the Parametric Evaluation," Issued August 2002

36. NUREG/CR-6762, Volume 4, "GSI-191 Technical Assessment: Development of Debris Transport Fractions in Support of the Parametric Evaluation," Issued August 2002

37. NUREG/CR-6772, "GSI-191: Separate Effects Characterization of Debris Transport in Water," Issued August 2002

38. NUREG/CR-6773, "GSI-191: Integrated Debris-Transport Tests in Water Using Simulated Containment Floor Geometries," Issued December 2002

39. NUREG/CR-6808, "Knowledge Base for the Effect of Debris on Pressurized Water Reactor Emergency Core Cooling Sump Performance," Issued February 2003

40. NUREG/CR-6916, "Hydraulic Transport of Coating Debris, A Subtask of GSI-191," Issued December 2006

41. Nuclear Energy Institute (NEI) Document 02-01, "Condition Assessment Guidelines: Debris Sources Inside PWR Containments," Revision 1

42. Westinghouse Technical Bulletin, TB-06-15, "Unqualified Service Level 1 Coatings on Equipment in Containment," Dated September 28, 2006

43. C.D.I. Report 96-06, "Air Jet Impact Testing of Fibrous and Reflective Metallic Insulation," Revision A, included in Volume 3 of General Electric Document NEDO-32686-A, "Utility Resolution Guide for ECCS Suction Strainer Blockage"

Vogtle Electric Generating Plant
Supplemental Response to NRC Generic Letter 2004-02

Enclosure 3

General Electric Hitachi Nuclear Energy Americas LLC, Affidavit

GE Hitachi Nuclear Energy Americas LLC

AFFIDAVIT

I, Tim E. Abney, state as follows:

(1) I am Vice President, Services Licensing, Regulatory Affairs, GE-Hitachi Nuclear Energy Americas LLC ("GEH"), have been delegated the function of reviewing the information described in paragraph (2) which is sought to be withheld, and have been authorized to apply for its withholding.

(2) The information sought to be withheld is contained in Enclosure 1 of GEH's letter, JB08-JXDR7-02, J. Betsill to D. Medlik, entitled "*Revised Supplemental Response to NRC Generic Letter 2004-02*", dated April 9, 2008. GEH proprietary information in Enclosure 1, which is entitled "*Revised Supplemental Response to NRC Generic Letter 2004-02*", is identified by a dotted underline inside double square brackets. [[This sentence is an example.{3}]]. In each case, the superscript notation {3} refers to Paragraph (3) of this affidavit, which provides the basis for the proprietary determination.

(3) In making this application for withholding of proprietary information of which it is the owner or licensee, GEH relies upon the exemption from disclosure set forth in the Freedom of Information Act ("FOIA"), 5 USC Sec. 552(b)(4), and the Trade Secrets Act, 18 USC Sec. 1905, and NRC regulations 10 CFR 9.17(a)(4), and 2.390(a)(4) for "trade secrets" (Exemption 4). The material for which exemption from disclosure is here sought also qualify under the narrower definition of "trade secret", within the meanings assigned to those terms for purposes of FOIA Exemption 4 in, respectively, Critical Mass Energy Project v. Nuclear Regulatory Commission, 975F2d871 (DC Cir. 1992), and Public Citizen Health Research Group v. FDA, 704F2d1280 (DC Cir. 1983).

(4) Some examples of categories of information which fit into the definition of proprietary information are:

a. Information that discloses a process, method, or apparatus, including supporting data and analyses, where prevention of its use by GEH's competitors without license from GEH constitutes a competitive economic advantage over other companies;

b. Information which, if used by a competitor, would reduce his expenditure of resources or improve his competitive position in the design, manufacture, shipment, installation, assurance of quality, or licensing of a similar product;

c. Information which reveals aspects of past, present, or future GEH customer-funded development plans and programs, resulting in potential products to GEH;

d. Information which discloses patentable subject matter for which it may be desirable to obtain patent protection.

The information sought to be withheld is considered to be proprietary for the reasons set forth in paragraphs (4)a. and (4)b. above.

(5) To address 10 CFR 2.390(b)(4), the information sought to be withheld is being submitted to NRC in confidence. The information is of a sort customarily held in confidence by GEH, and is in fact so held. The information sought to be withheld has, to the best of my knowledge and belief, consistently been held in confidence by GEH, no public disclosure has been made, and it is not available in public sources. All disclosures to third parties, including any required transmittals to NRC, have been made, or must be made, pursuant to regulatory provisions or proprietary agreements which provide for maintenance of the information in confidence. Its initial designation as proprietary information, and the subsequent steps taken to prevent its unauthorized disclosure, are as set forth in paragraphs (6) and (7) following.

(6) Initial approval of proprietary treatment of a document is made by the manager of the originating component, the person most likely to be acquainted with the value and sensitivity of the information in relation to industry knowledge, or subject to the terms under which it was licensed to GEH. Access to such documents within GEH is limited on a "need to know" basis.

(7) The procedure for approval of external release of such a document typically requires review by the staff manager, project manager, principal scientist, or other equivalent authority for technical content, competitive effect, and determination of the accuracy of the proprietary designation. Disclosures outside GEH are limited to regulatory bodies, customers, and potential customers, and their agents, suppliers, and licensees, and others with a legitimate need for the information, and then only in accordance with appropriate regulatory provisions or proprietary agreements.

(8) The information identified in paragraph (2), above, is classified as proprietary because it contains detailed results of analytical model and methods, as well as testing methods, applied to perform evaluations of emergency core cooling system and containment sprays strainers in Boiling Water Reactors ("BWR") and Pressurized Water Reactors. The development and approval of these models and methods were achieved at a significant cost to GEH.

The development of the evaluation process along with the interpretation and application of the analytical results is derived from the extensive experience database that constitutes a major GEH asset.

(9) Public disclosure of the information sought to be withheld is likely to cause substantial harm to GEH's competitive position and foreclose or reduce the availability of profit-making opportunities. The information is part of GEH's comprehensive safety and technology base, and its commercial value extends beyond the original development cost. The value of the technology base goes beyond the extensive physical database and analytical methodology and includes development of the expertise to determine and apply the appropriate evaluation process. In addition, the technology base includes the value derived from providing analyses done with NRC-approved methods.

The research, development, engineering, analytical and NRC review costs comprise a substantial investment of time and money by GEH.

The precise value of the expertise to devise an evaluation process and apply the correct analytical methodology is difficult to quantify, but it clearly is substantial.

GEH's competitive advantage will be lost if its competitors are able to use the results of the GEH experience to normalize or verify their own process or if they are able to claim an equivalent understanding by demonstrating that they can arrive at the same or similar conclusions.

The value of this information to GEH would be lost if the information were disclosed to the public. Making such information available to competitors without their having been required to undertake a similar expenditure of resources would unfairly provide competitors with a windfall, and deprive GEH of the opportunity to exercise its competitive advantage to seek an adequate return on its large investment in developing and obtaining these very valuable analytical tools.

I declare under penalty of perjury that the foregoing affidavit and the matters stated therein are true and correct to the best of my knowledge, information, and belief.

Executed on this 9th day of April 2008.

Tim E. Abney
Vice President, Services Licensing
GE-Hitachi Nuclear Energy Americas LLC

Vogtle Electric Generating Plant
Supplemental Response to NRC Generic Letter 2004-02

Enclosure 4

List of Regulatory Commitments

Enclosure 4

List of Regulatory Commitments

The following table identifies those actions committed by Southern Nuclear Operating Company in this document for Vogtle Electric Generating Plant. Any other statements in this submittal are provided for information purposes and are not considered to be regulatory commitments.

Commitment	Type		Scheduled Completion Date (If Required)
	One-Time Action	Continuing Compliance	
For Chemical Effects Testing, Downstream Effects – Components and Systems, and Downstream Effects – Fuel and Vessel. VEGP will be in compliance with the regulatory requirements listed in the Applicable Regulatory Requirements section of GL 2004-02. Remaining information requested by section 3.m, 3.n. and 3.o will be supplied to the NRC by the scheduled completion date.	X		June 30, 2008
An enhancement will be made to the engineering guidance for the design change process to include design considerations related to Generic Letter 2004-02.	X		Complete