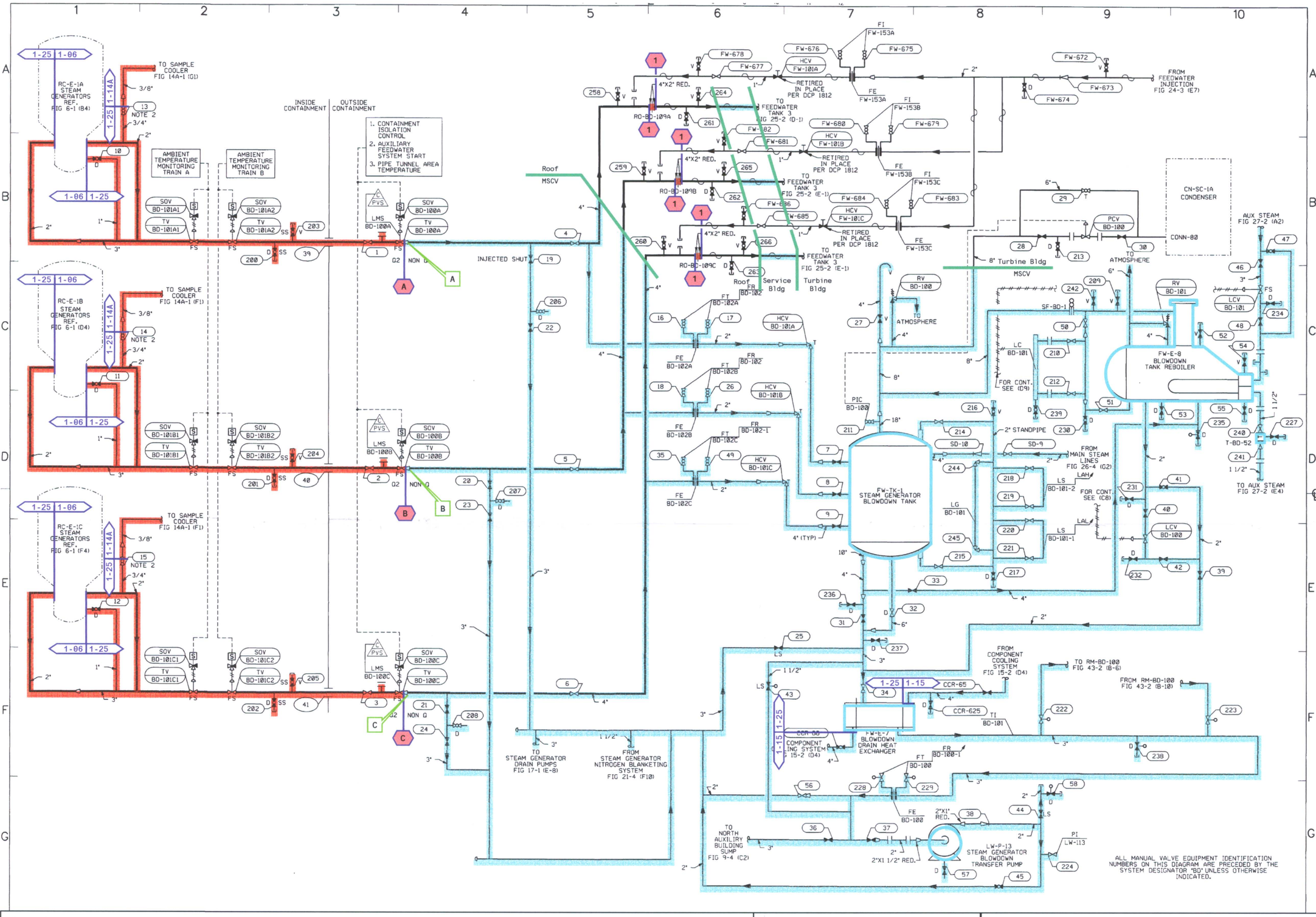

License Renewal Drawing Legend

Boundary drawings are numbered by unit, system and a drawing identifier. The format is [unit]-[system number]-[drawing identifier].

Drawings are highlighted to depict the functional boundaries of fluid or gas-retaining components needed to support intended functions. Structural and electrical components are not highlighted on these drawings.

Red highlighting shows components that are credited by the CLB for performing an intended function as defined in 10 CFR 54.4(a)(1), (a)(2) or (a)(3).

Blue highlighting shows components that are in scope for 10 CFR 54.4(a)(2) spatial concerns (e.g., leakage, spray, pipe whip, jet impingement), but are not credited by the CLB.

Bright green highlighting shows components that are in scope because they provide mechanical support to safety-related components per 10 CFR 54.4(a)(2), and do not meet one of the other scoping criteria.

Black lines (no highlighting) shows components that are not in scope for License Renewal.

Where portions of a system that are in scope for (a)(2) transition to a non-safety building, the blue highlighting stops and a dark green lines indicates that building boundary

1-14A | 1-06

Flags identify system scoping boundaries. Flags with text on both sides indicate a transition between systems, where both sides contain in scope equipment. The format is [unit]-[system number].

1-33

One sided flags indicate the limit of a system where equipment beyond the flag is not in scope and does not require equivalent anchor identification.

1 -OR- A

Hexagonal boxes identify safety/non-safety transitions. A number or letter will identify equivalent anchor treatment. A number corresponds to a "SR/NSR Boundary Note" located at the bottom of a drawing.

A

Green callout boxes show the limits of equivalent anchors and have letters corresponding to the letters in the safety/non-safety transition boxes.

Unless otherwise noted, highlighted components are evaluated in parent system of the drawing on which they appear.

Some components are shown on more than one drawing. For some of these components, to aid in clarity, highlighting only appears on the primary (parent) system drawing.

Drawings include continuation pointers to other drawings using "Fig. [Sys]-[number]" format. The numbers correspond to the LR drawing numbers with the Unit designation omitted, unless the pointer is to the opposite unit.

Instrument lines are not shown on these License Renewal drawings. Where they connect to in scope piping, the instrument lines are also in scope. This includes all associated fittings and isolation valves, up to and including the instruments themselves (which are generally considered to be active components.)

Pipe caps and pipe plugs do not perform a pressure or leakage boundary function. They are considered housekeeping appliances and are not within the scope of License Renewal. System integrity is provided by upstream isolation valves.

SR/NSR Boundary Notes:

1. Orifices RO-BD-109A, RO-BD-109B & RO-BD-109C have an (a)(3) EQ function and are not safety-related.

Depicted LR Systems:

1-06: Reactor Coolant
1-14A: Reactor Plant Sample
1-15: Component Cooling Water
1-25: Steam Generator Blowdown

LR Drawing 1-25-1 Rev. 5
Steam Generator Blowdown System (BD)

FENOC
FirstEnergy Nuclear Operating Company

D-06