Hannibal Clinic

June 6, 2008

Please expedite install scheduled for 6-16-08

Materials Licensing Branch
U.S. Nuclear Regulatory Commission, Region III
2443 Warrenville Road, Suite 210
Lisle, IL 60532-4352

Re: License number 24-32619.01
Updated camera with profile attenuation correction using Gd-153

On June 16, 2008, Hannibal Clinic will start the install of a Symbia e Nuclear Medicine camera. The medical camera uses Gd-153.

Attached is detailed information on the Gd-153 source, device registry number and Clearance Registration Number.

We are requesting that you amend our license to include this 300 mCi (11.1 GBq) of sealed Gd-153 activity, contained in 32 lines.

Sincerely,

Joel Hassien MD

Dr. Joel Hassien
Radiation Safety Officer

Cc: Kurt Ebers, Administrator
Lois Damron, Director Clinical Services

RECEIVED JUN 0 9 2008

Mailing Address • P.O. Box 311 • Hannibal, MO 63401
Hannibal Clinic • 100 Medical Drive • Hannibal, MO 63401 • (573) 221-5250 • Fax (573) 231-3731
Hannibal Ambulatory Care Center • 100 Medical Drive • Hannibal, MO 63401 • (573) 248-3333 • Fax (573) 248-3354
Hannibal Clinic - Palmyra • 1811 S. Main • Palmyra, MO 63461 • (573) 769-2231 • Fax (573) 769-3953
Hannibal Clinic - Bowling Green • 710 Bus. 61 South • Bowling Green, MO 63334 • (573) 324-2063 • Fax (573) 324-2167
Hannibal Clinic - Monroe City • 400 N. Main • Monroe City, MO 63456 • (573) 735-4541 • Fax (573) 735-2143
Hannibal Clinic - Vandalia • 425 N. Galloway Rd. • Vandalia, MO 63382 • (573) 594-3832 • Fax (573) 594-6975

Equal Opportunity Employer • Services Provided on a Non-Discriminatory Basis

To: Radiation Safety Officer
Profile Attenuation Correction Device Customers

From: Siemens Molecular Imaging, Product Management Dept.

Date: March, 2007

Subj: Profile Source Registration Kit

This binder contains detailed information about the Profile Attenuation Correction (AC) device for your e.cam® camera system. A complete listing of the contents for each *tabbed* section (1 – 7) of this binder is shown below.

1. Device Registry
   Source Exposure Rates
2. e.cam Profile White Paper Including Dosimetry
3. Profile Hardware Components
4. Source Activity Levels
   Eckert & Ziegler Isotope Products Source Information
5. Source Replenishment Procedure
6. Phantom Studies
7. Troubleshooting
   Labeling

This material is designed to assist you in obtaining a site license for the Gd-153 sources used in the Profile device. It is advised that you allow for a total of 300 mCi (11.1 GBq) of sealed Gd-153 activity, contained in 32 lines. This allows you to have a complete initial set (28 lines) plus the 4 replenishment lines that you will receive 6 months after installation.

The Profile Attenuation Correction device has received 510(k) clearance by the FDA under registration #K963983.

The Profile Attenuation Correction device has been approved by the Illinois Emergency Management Agency, Division of Nuclear Safety, under device registry #IL-605-D-105-S. This registration is acknowledged by the NRC.

Once an order for Profile has been received, our source vendor will contact you directly. The source vendor will require a copy of your updated site license on file, prior to shipping the sources to your department.

The Gd-153 sources will be shipped to your department by our source vendor after the hardware components of the system have been installed and verified, and a copy of the updated site license is on file. The delivery date of the sources will be set in consultation with you.

Page 2 of this memo is a chart that depicts important vendor and distributor information. The information consists of: vendor/distributor name, address, telephone and fax numbers, registry number and model numbers. Use this chart for quick reference of the information or refer to the more detailed tabbed section of this binder.

Receipt of this memo by the proper parties is of great importance. Should the information be somehow misdirected, please ensure that it reaches either the Radiation Safety Officer or the Nuclear Medicine Department.

Caution: *Federal law of the United States of America restricts this device to sale by or on the order of a physician.*

Device Registry Numbers and Vendor/Distributor Information

Siemens Medical Solutions USA, Inc.
Molecular Imaging
2501 N. Barrington Road
Hoffman Estates, IL 60192

Device Registry Number: IL-605-D-105-S

510 (k) Clearance Registration Number: K963983

Eckert & Ziegler Isotope Products
24937 Avenue Tibbitts
Valencia, CA 91355
866-476-9767 (Telephone)
661-257-8308 (Fax)

Registry Number: CA0406S204S

Model Numbers: A-3410 or NES-8426

IEMA
Illinois Emergency Management Agency
Division of Nuclear Safety

Rod R. Blagojevich, Governor
William C. Burke, Director

July 14, 2006

Device Registry Number
IL-605-D-105-D

Traci Kime
U.S. Nuclear Regulatory Commission
11545 Rockville Pike
MS: T8F5
Rockville, MD 20852

Dear Ms. Kime:

Enclosed is device registry number IL-605-D-105-S. A copy of this has also been provided to Jose Macatangay of Siemens Medical Solutions USA, Inc.

If you have any questions, please feel free to call.

Sincerely,

Charles G. Vinson, Supervisor
Radioactive Materials Licensing

CGV:MEB:kjc

Enclosure

cc: Jose D. Macatangay
Radiation Safety Officer
Siemens Medical Solutions USA, Inc.
2501 North Barrington Road
Hoffman Estates, IL 60195

DEVICE TYPE: Line Source Holder/Attenuation Correction Device

DESCRIPTION:

Profile:

This product is intended to be used for establishing attenuation corrected images in SPECT systems (ECAM) due to non-uniform patient attenuation. The device is a curved and electronically shuttered array of 14 line sources in 14 collimated source housings arranged in a source tray. These 14 sources vary in activity but will not exceed 4.4 GBq (120 mCi) in total per array. Initial loadings of each array will include 2- 20 mCi, 2-11.9 mCi, 2-7 mCi, 2-4.2 mCi, 2-2.5 mCi, 2-1.5 mCi and 2-0.9 mCi line sources (+20% - 10%) in individually collimated source housing. These activities have been selected to take advantage of the rate of decay of Gd-153 over a six month time period at which time sources/source housings are leak tested and the two weakest sources/source housings replenished.

Each collimated source housing is an assembly of a copper filter, hardened lead shielding, a lead collimator, an extruded aluminum sleeve and a stainless steel line source of Gd-153. Fourteen such housings are inserted in an ABS plastic source tray in a specific arrangement. Each collimated source housing is totally enclosed within the array and is not accessible when the shutter is in the open position or the array is removed from the camera.

The ABS plastic source tray is covered by a shutter made from an aluminum frame with 14 individual lead strips to block the collimated openings. The shutter is designed to automatically retract to the closed position in the event of software error conditions or a loss of power (e.g., power failure, removal of system from camera, etc.) by a return spring incorporated in the shutter assembly. A lead counterbalance is used to reduce the necessary force to be overcome by the solenoid/return spring when the array is in a non-level position during imaging. The shutter is software controlled and has optical sensors to report open or closed shutter positions to the computerized monitor. In addition, a mechanical indicator is on each side of the array housing which shows green for shutter closed and red for shutter open.

The overall dimensions of the aluminum array enclosing the source tray is approximately 36 inches long by 9 inches wide by 2 inches thick and weighs approximately 20 pounds. There is an approximate 22 inch radius over a 15 inch

DEVICE TYPE: Line Source Holder/Attenuation Correction Device

DESCRIPTION: (continued)

These activities have been selected to take advantage of the rate of decay of Gd-153 over a six month time period at which time sources/source housings are leak tested and the two weakest sources/source housings replenished. Each collimated source housing is totally enclosed within the array and is not accessible when the shutter is in the open position or the array is removed from the camera. The aluminum source tray is covered by a shutter made from an aluminum frame with 14 individual lead strips to block the collimated openings. The shutter is designed to automatically retract to the closed position in the event of software error conditions or a loss of power (e.g., power failure, removal of system from camera, etc.) by a return spring incorporated in the shutter assembly. The shutter is software controlled and has electromechanical sensors to report open or closed shutter positions to the computerized monitor along with a red visual indicator on each array housing for an open shutter position and green indicator for a closed shutter position. In addition, a mechanical indicator is on each side of the array housing which also indicates open or closed shutter position.

For Siemens' Ccam, the overall dimensions of the aluminum array enclosing the source tray is approximately 20 inches long by 9 inches wide by 2 inches thick and weighs approximately 45 pounds. The tray holding the 14 sources within the array is protected by a bracket cover, a cable, and a handle which locks the entire array assembly into place.

LABELING:

Profile:

The array is affixed with a label identifying the radionuclide, activity, trefoil symbol, and the words "Caution Radioactive Material". The label is made of a polycarbonate marking film with adhesive backing and the dimensions are 3 inches by 0.75 inches. It is attached directly to the end plate through which access is gained to the source tray.

The name and address of the manufacturer, model number and serial number are located on a separate label on the opposite end of the array.

DEVICE TYPE: Line Source Holder/Attenuation Correction Device

CONDITIONS OF NORMAL USE:

The device is designed and intended for use in a fixed diagnostic nuclear medicine environment installed on a SPECT camera imaging system. As such, the device is not expected to be subjected to environmental stresses which a patient could not reasonably endure. The device can be removed from the camera by the user for storage in a secure area with distributor provided training and instructions found in the operator's manual. The users of the device are intended to be medical technicians, radiation safety officers, physicians and other authorized users with training in radiation safety applicable to sealed calibration and reference sources.

The distributor provides training and detailed written instructions with regards to replenishment of the sources within the device. Every 6 months it is necessary to remove two collimated source holders containing the weakest line sources (approximately 15 MBq [0.5 mCi] of Gd-153, each, at the time of recommended replenishment), reposition the remaining collimated source holders and install two new collimated source holders containing lines sources of 740 MBq (20 mCi), each. The source array is replenished by shifting each pair of collimated source holders to the next outer position in the source tray such that the inner positions are emptied and the new collimated source holders are inserted in the vacated positions. Individual collimated source holders containing line sources are not supplied by Siemens but by the specific source manufacturer listed on page one of this registry. Expended sources in the collimated holder may be returned to those source manufacturers with their prior approval. Sources are supplied by the source vendors in the collimated source holder which is designed to be inserted in the tray as a completed assembly. This procedure should be performed in a controlled, shielded area. The entire procedure of removing the source tray from the array, removing the expended sources, repositioning the remaining sources, installing the new line sources and remounting the source tray in the array is estimated as requiring less than an hours time. Wipe tests of all the sources should be collected for analysis at the time replenishment (i.e., every six months). At no time will the end user need direct access to the line sources within the holders.

CONDITIONS OF NORMAL USE: (continued)

The estimated working life of the Profile device is five (5) years. The estimated working life of the C. Clear device is ten (10) years.

DEVICE TYPE: Line Source Holder/Attenuation Correction Device

EXTERNAL RADIATION LEVELS:

Profile:

The distributor notes the measured maximum radiation levels of the fully loaded source tray with a pressurized micro R ion chamber are as follows:

DISTANCE (cm)	MAXIMUM RADIATION LEVEL	
	shutter open	shutter closed
5 cm	7 uSv/h (0.7 mR/h)	1 uSv/h (0.1 mr/h)
30 cm	5 uSv/h (0.5 mR/h)	0.1 uSv/h (0.01 mr/h)
100 cm	5 uSv/h (0.5 mR/h)	Background

The maximum radiation levels from a fully loaded individual collimated source holder were measured with a pressurized micro R ion chamber as follows:

DISTANCE (cm)	MAXIMUM RADIATION LEVEL
5 cm	7 uSv/h (0.7 mR/h)
30 cm	5 uSv/h (0.5 mR/h)
100 cm	2 uSv/h (0.2 mR/h)

DEVICE TYPE: Line Source Holder/Attenuation Correction Device

QUALITY ASSURANCE AND CONTROL:

Siemens Medical Solutions USA, Inc. maintains a quality assurance and control program, which has been deemed acceptable for licensing purposes by the Illinois Emergency Management Agency. A copy of the program is on file with the Division of Radioactive Materials.

LIMITATIONS AND OTHER CONSIDERATIONS OF USE:

1. The total activity of the Gd-153 line sources as well as two of the maximum activity sources exceed the limits specified in 32 Ill. Adm. Code 335.2040 (10 CFR 35.57) for calibration and reference sources. These devices may only be distributed to persons specifically licensed by the Agency, the U.S. NRC, an Agreement State or a Licensing state for medical use.

2. Handling, storage use, transfer and disposal: To be determined by the licensing authority.

3. These devices shall be leak tested at intervals not to exceed six months using techniques capable of detecting 0.005 microcurie of removable contamination.

4. This registration sheet and the information contained within the references shall not be changed without the written consent of the Agency.

5. The distributor has indicated that they will not accept returns of sealed sources. However, with prior arrangements, the individual source manufacturer may accept these sources.

6. Siemens has demonstrated that replenishment of the collimated source holders containing the Gd-153 line sources can be performed in the field by a physician, Radiation Safety Officer, medical technician or other authorized user trained in radiation safety practices associated with sealed calibration and reference sources by following supplied written instructions.

REGISTRY OF RADIOACTIVE SEALED SOURCES AND DEVICES
SAFETY EVALUATION OF DEVICE
(AMENDED IN ITS ENTIRETY)

NO: IL-605-D-105-S DATE: July 14, 2006 ATTACHMENT 1

PROFILE ATTENUATION CORRECTION SYSTEM ARRANGEMENT

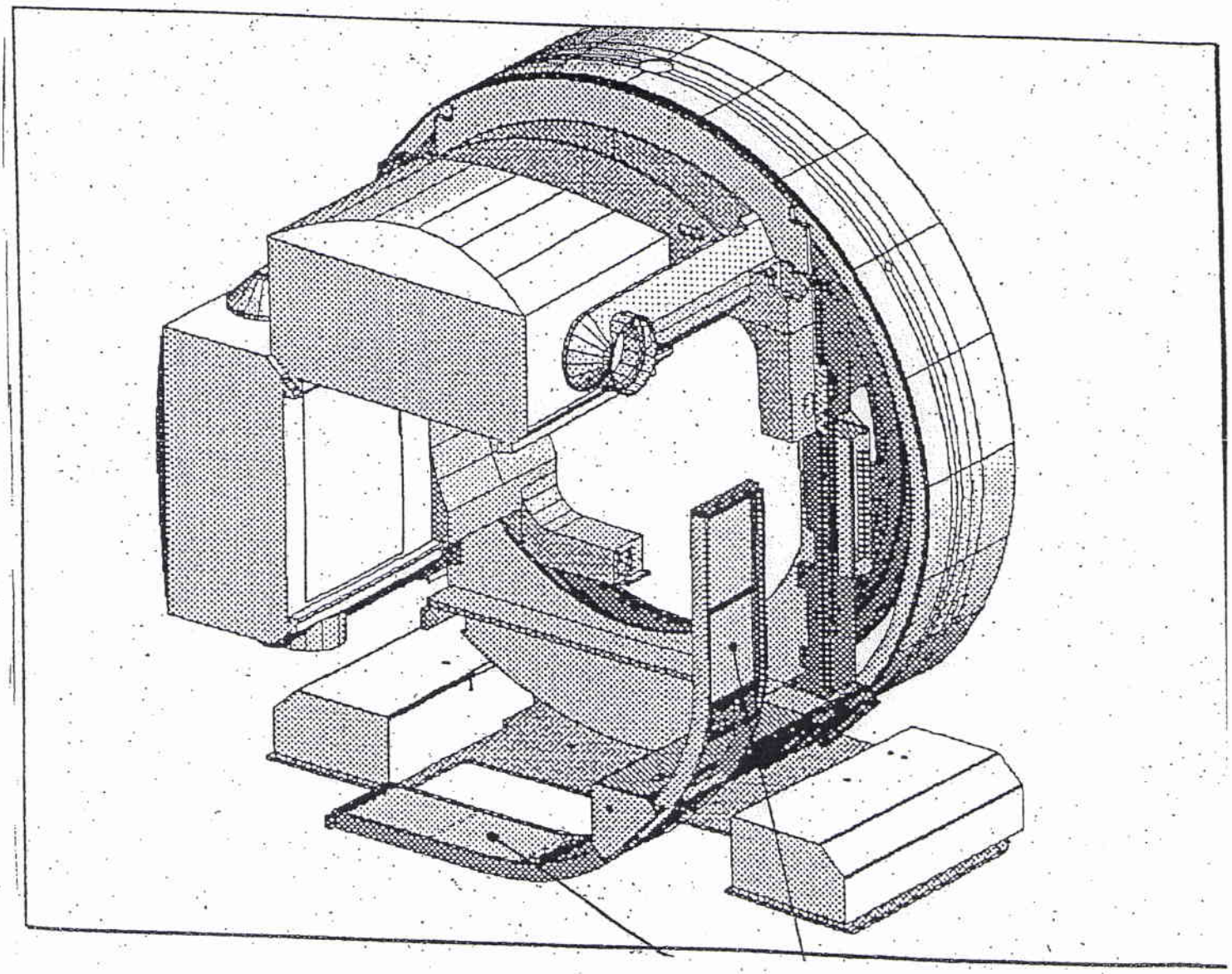

ACS Arrays

REGISTRY OF RADIOACTIVE SEALED SOURCES AND DEVICES
SAFETY EVALUATION OF DEVICE
(AMENDED IN ITS ENTIRETY)

NO: IL-605-D-105-S DATE: July 14, 2006 ATTACHMENT 3

COLLIMATED SOURCE HOLDER

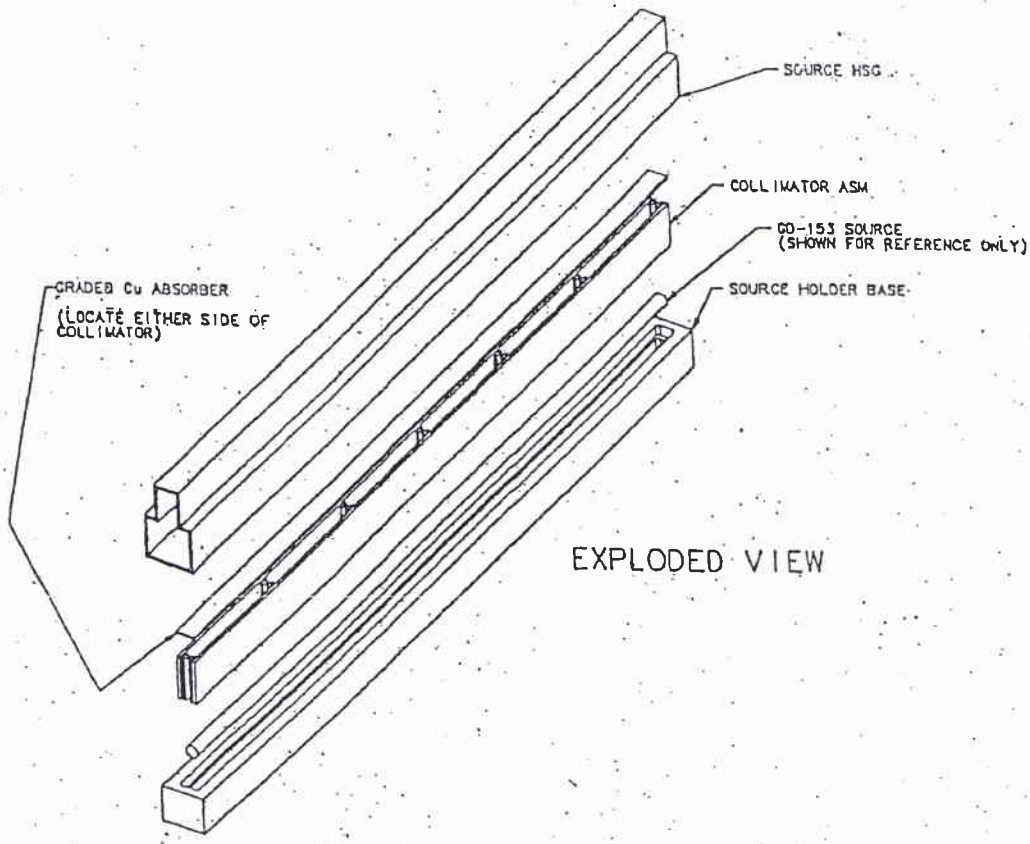

15-OCT-97	15-APR-98	15-OCT-98	15-APR-99	15-OCT-99	15-APR-00	15-OCT-00	15-APR-01
20.0 mCi	11.9 mCi	7.0 mCi	4.2 mCi	2.5 mCi	1.5 mCi	0.9 mCi	0.5 mCi
SLOT 1	SLOT 2	SLOT 3	SLOT 4	SLOT 5	SLOT 6	SLOT 7	REMOVE

Figure 4-5. Sample of Label Shown on Bottom of Source Cartridge.

Approximate Dimensions
8.5" x 0.5 " x 0.8"

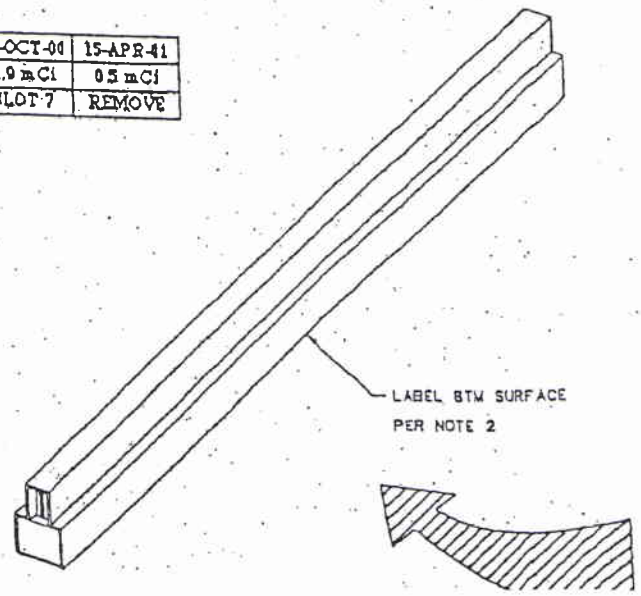

REGISTRY OF RADIOACTIVE SEALED SOURCES AND DEVICES
SAFETY EVALUATION OF DEVICE
(AMENDED IN ITS ENTIRETY)

NO: IL-605-D-105-S DATE: July 14, 2006 ATTACHMENT 5

C. Clear Drawing

Figure 2. Attenuation Correction Device, top view.

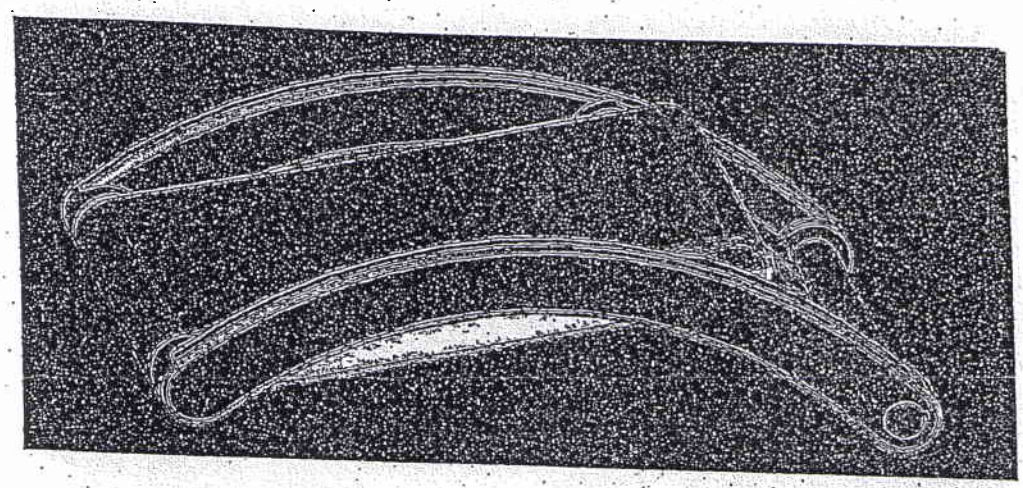

Figure 3. Attenuation Correction Device, bottom view.

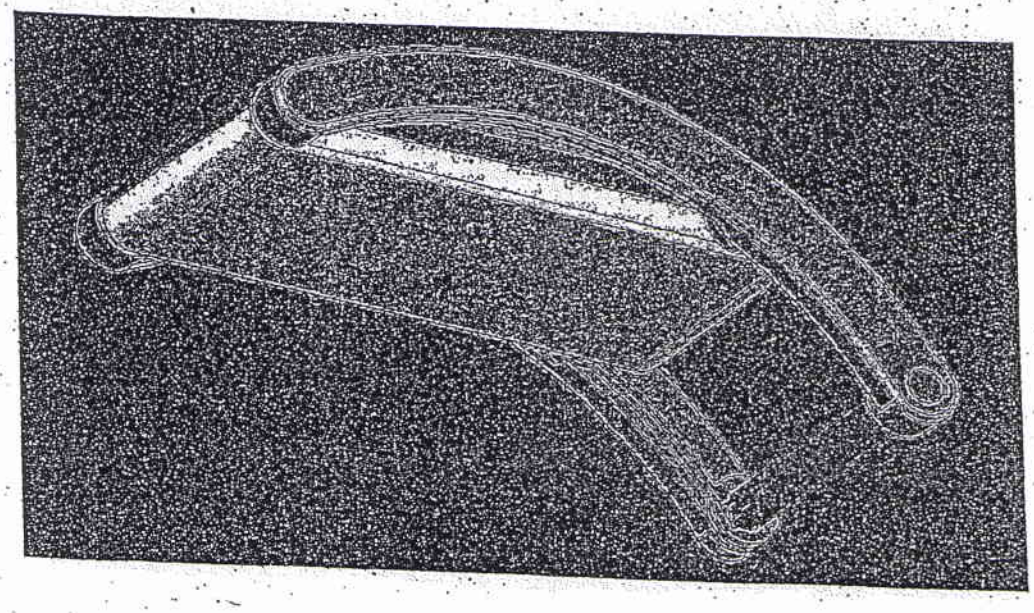

Attachment #2 **Profile Source Activity Levels and Vendors**

Profile Attenuation Correction for e.cam® uses two multiple line array (MLA) transmission sources (one for each detector).

Each transmission source array contains seven (7) Gd-153 line pairs (for a total of 28 sources per camera system).

The activity level of each line source has a tolerance of -10%/+20%.

Currently there is one qualified source supplier (see attached). This supplier has agreed to take the Gd-153 line sources back after their use has been discontinued.

Note: The 'bare' lines are shipped in a collimated, shielded source holder. This source holder is not to be opened by the user and/or Siemens service; if a problem is suspected the source holder is to be returned to the source vendor.

Slot #	Quantity	Nominal Activity (mCi)	Nominal Activity (MBq)		
1	4	20.0	740		
2	4	11.9	440		
3	4	7.0	259		
4	4	4.2	155		
5	4	2.5	93		
6	4	1.5	56		
7	4	0.9	33		
Total:	28	192.0	7104		
(Nominal)					

Eckert & Ziegler Isotope Products Source Information

Eckert & Ziegler Isotope Products
24937 Avenue Tibbitts
Valencia, CA 91355
USA
Telephone: (866) 476-9767
Fax: (661) 257-8308

Align top of FedEx Shipping Label or ASTRA Label here.

27

100

FedEx Express US Ai

RT 593 D

FZ 595

5211
06.09

7939 5211

1 From This portion can be removed for Re

Date

FedEx Tracking Number 865579395211

Sender's Name

Phone

Company HANNIBAL

Address 100 MEDIC

Dept./Floor/Suite/Room

City HANNIBAL

State

ZIP

2 Your Internal Billing Reference

3 To

Recipient's Name

Phone

Company

Recipient's Address

Dept./Floor/Suite/Room

We cannot deliver to P.O. boxes or P.O. ZIP codes.

Address

To request a package be held at a specific FedEx location, print FedEx address here.

City

State

ZIP

8655 7939 5211

RECIPIENT: PEEL HERE

fedex.com 1.800.GoFedEx 1.800.463.3339

FedEx

TRK# 0215 8655 7939 5211

MON - 09 JUN A2

PRIORITY OVERNIGHT

60532

IL-US

ORD

XH ENLA

Emp# 212846 06JUN08 UINA

4a

4b

5

Envelope

FedEx Large Pak, and FedEx Sturdy Pak.

* Declared value limit $500.

6 Special Handling

Include FedEx address in Section 3.

SATURDAY Delivery
Not available for FedEx Standard Overnight, FedEx First Overnight, FedEx Express Saver, or FedEx 3Day Freight.

HOLD Weekday at FedEx Location
Not available for FedEx First Overnight.

HOLD Saturday at FedEx Location
Available ONLY for FedEx Priority Overnight and FedEx 2Day, to select locations.

Does this shipment contain dangerous goods?

One box must be checked.

No

Yes
As per attached Shipper's Declaration.

Yes
Shipper's Declaration not required.

Dry Ice
Dry ice, 9, UN 1845 ____ x ____ kg

Cargo Aircraft Only

Dangerous goods (including dry ice) cannot be shipped in FedEx packaging.

7 Payment Bill to:

Enter FedEx Acct. No. or Credit Card No. below.

Obtain Recip. Acct. No.

Sender
Acct. No. in Section 1 will be billed.

Recipient

Third Party

Credit Card

Cash/Check

Total Packages

Total Weight

Credit Card Auth.

Our liability is limited to $100 unless you declare a higher value. See the current FedEx Service Guide for details.

8 Residential Delivery Signature Options

If you require a signature, check Direct or Indirect.

No Signature Required
Package may be left without obtaining a signature for delivery.

Direct Signature
Someone at recipient's address may sign for delivery. Fee applies.

Indirect Signature
If no one is available at recipient's address, someone at a neighboring address may sign for delivery. Fee applies.

519

Rev. Date 10/06•Part #158279•©1994–2006 FedEx•PRINTED IN U.S.A.•SRF

only.