CONTENTS

Page

1.4 INFRASTRUCTURE STRUCTURES, SYSTEMS, COMPONENTS, EQUIPMENT, AND OPERATIONAL PROCESS ACTIVITIES 1.4-1

INTENTIONALLY LEFT BLANK

1.4 INFRASTRUCTURE STRUCTURES, SYSTEMS, COMPONENTS, EQUIPMENT, AND OPERATIONAL PROCESS ACTIVITIES

The introduction to Chapter 1 summarizes the measures taken to ensure the safety of operational aspects of the Yucca Mountain repository site prior to permanent closure.

Certain systems and facilities support both surface and subsurface activities. Sections 1.4.1 through 1.4.5 present the design details of the structures, systems, and components (SSCs) associated with this common infrastructure.

Safety considerations that are addressed in these sections include the supply of electric power to SSCs that are important to safety (ITS), controls and instrumentation used in emergency management, and fire protection.

Specifically, Section 1.4.1 describes the design approach used to provide reliable, normal electric power and continuous electrical power to ITS systems and components. Section 1.4.2 describes the operational control philosophy, the monitoring systems that monitor the facilities and environment, the communications systems available, and how these systems are used in emergency management. Section 1.4.3 describes the fire protection capabilities and program. Section 1.4.4 describes the support systems for operations of the facilities. Section 1.4.5 describes how waste is managed at the site.

For the ITS SSCs addressed in Sections 1.4.1 and 1.4.3, the ITS SSCs are described, operating processes are identified, safety classification is stated, procedural safety controls are identified, design bases and design criteria are presented, design methodologies are discussed, materials of construction are identified, selected codes and standards are provided, and applicable loading combinations are listed. General information is provided for SSCs that are neither ITS nor important to waste isolation to complete the description of the repository and its operations.

Sections 1.4.1 through 1.4.5 present general information that addresses the requirements of 10 CFR Part 63 and the acceptance criteria in NUREG-1804 including HLWRS-ISG-02 (Section 2.1.1.2.3: Acceptance Criterion 2(2)) by providing a general description of the infrastructure SSCs and the associated operational process activities of the geologic repository operations area. Sections 1.4.1 and 1.4.3 also present specific information for the ITS portions of the electric power system and fire protection system as required by 10 CFR 63.21(c) and address the acceptance criteria of NUREG-1804 including HLWRS-ISG-02 (Section 2.1.1.2.3: Acceptance Criterion 2(2)). The following table lists Sections 1.4.1 through 1.4.5 and the corresponding regulatory requirements and acceptance criteria from NUREG-1804 addressed in each section.

SAR Section	Information Category	10 CFR Part 63 Reference	NUREG-1804 Reference (and Changes to NUREG-1804 from HLWRS ISGs)
1.4.1	Electric Power	63.21(c)(2) 63.21(c)(3) 63.112(a) 63.112(e)(8) 63.112(e)(11) 63.112(e)(12) 63.112(f)(2)	Section 2.1.1.2.3: Acceptance Criterion 1 Acceptance Criterion 2 Acceptance Criterion 3 Acceptance Criterion 6 Section 2.1.1.6.3: Acceptance Criterion 1 Acceptance Criterion 2 Section 2.1.1.7.3.1: Acceptance Criterion 1 Section 2.1.1.7.3.2: Acceptance Criterion 1 Section 2.1.1.7.3.3(I): Acceptance Criterion 1 Acceptance Criterion 2 Acceptance Criterion 4 Section 2.1.1.7.3.3(II): Acceptance Criterion 1 Acceptance Criterion 8 HLWRS-ISG-02 Section 2.1.1.2.3: Acceptance Criterion 2
1.4.2	Controls and Monitoring	63.21(c)(2) 63.21(c)(3)(i) 63.21(c)(6) 63.112(a) 63.112(e)(7) 63.112(e)(10)	Section 2.1.1.2.3: Acceptance Criterion 1 Acceptance Criterion 2 Acceptance Criterion 3 Acceptance Criterion 6 Section 2.1.1.6.3: Acceptance Criterion 1 Section 2.1.1.7.3.1: Acceptance Criterion 1 HLWRS-ISG-02 Section 2.1.1.2.3: Acceptance Criterion 2

SAR Section	Information Category	10 CFR Part 63 Reference	NUREG-1804 Reference (and Changes to NUREG-1804 from HLWRS ISGs)
1.4.3	Fire Protection	63.21(c)(2) 63.21(c)(3) 63.112(a) 63.112(e)(6) 63.112(e)(8) 63.112(e)(9) 63.112(f)(2)	Section 2.1.1.2.3: Acceptance Criterion 1 Acceptance Criterion 2 Acceptance Criterion 3 Acceptance Criterion 6 Section 2.1.1.6.3: Acceptance Criterion 1 Acceptance Criterion 2 Section 2.1.1.7.3.1: Acceptance Criterion 1 Section 2.1.1.7.3.2 Acceptance Criterion 1 Section 2.1.1.7.3.3(I): Acceptance Criterion 1 Acceptance Criterion 2 Acceptance Criterion 4 Section 2.1.1.7.3.3(II): Acceptance Criterion 3 HLWRS-ISG-02 Section 2.1.1.2.3: Acceptance Criterion 2
1.4.4	Plant Services	63.21(c)(2) 63.21(c)(3)(i) 63.112(a)	Section 2.1.1.2.3: Acceptance Criterion 1 Acceptance Criterion 2 Acceptance Criterion 6 HLWRS-ISG-02 Section 2.1.1.2.3: Acceptance Criterion 2
1.4.5	Waste Management	63.21(c)(2) 63.21(c)(3)(i) 63.112(a) 63.112(e)(10)	Section 2.1.1.2.3: Acceptance Criterion 1 Acceptance Criterion 2 Acceptance Criterion 6 Section 2.1.1.6.3: Acceptance Criterion 1 HLWRS-ISG-02 Section 2.1.1.2.3: Acceptance Criterion 2

INTENTIONALLY LEFT BLANK

CONTENTS

Page

1.4.1 Electric Power 1.4.1-1
1.4.1.1 Normal Electrical Power 1.4.1-1
1.4.1.2 ITS Power 1.4.1-7
1.4.1.3 ITS DC Electrical Power and Uninterruptible Power Supply. 1.4.1-14
1.4.1.4 Electrical Support Subsystems 1.4.1-17
1.4.1.5 General References 1.4.1-21

INTENTIONALLY LEFT BLANK

TABLES

Page

1.4.1-1. Preclosure Nuclear Safety Design Bases and their Relationship to Design Criteria for the Electrical Systems 1.4.1-25

INTENTIONALLY LEFT BLANK

FIGURES

Page

1.4.1-1. 138 kV–13.8 kV Switchyard Power Distribution Main Single Line 1.4.1-29
1.4.1-2. 13.8 kV Normal Power Distribution Main Single Line (Sheet 1 of 6). 1.4.1-31
1.4.1-2. 13.8 kV Normal Power Distribution Main Single Line (Sheet 2 of 6). 1.4.1-33
1.4.1-2. 13.8 kV Normal Power Distribution Main Single Line (Sheet 3 of 6). 1.4.1-35
1.4.1-2. 13.8 kV Normal Power Distribution Main Single Line (Sheet 4 of 6). 1.4.1-37
1.4.1-2. 13.8 kV Normal Power Distribution Main Single Line (Sheet 5 of 6). 1.4.1-39
1.4.1-2. 13.8 kV Normal Power Distribution Main Single Line (Sheet 6 of 6). 1.4.1-41
1.4.1-3. Canister Receipt and Closure Facility Normal AC Electrical Power (Sheet 1 of 16). 1.4.1-43
1.4.1-3. Canister Receipt and Closure Facility Normal AC Electrical Power (Sheet 2 of 16). 1.4.1-45
1.4.1-3. Canister Receipt and Closure Facility Normal AC Electrical Power (Sheet 3 of 16). 1.4.1-47
1.4.1-3. Canister Receipt and Closure Facility Normal AC Electrical Power (Sheet 4 of 16). 1.4.1-49
1.4.1-3. Canister Receipt and Closure Facility Normal AC Electrical Power (Sheet 5 of 16). 1.4.1-51
1.4.1-3. Canister Receipt and Closure Facility Normal AC Electrical Power (Sheet 6 of 16). 1.4.1-53
1.4.1-3. Canister Receipt and Closure Facility Normal AC Electrical Power (Sheet 7 of 16). 1.4.1-55
1.4.1-3. Canister Receipt and Closure Facility Normal AC Electrical Power (Sheet 8 of 16). 1.4.1-57
1.4.1-3. Canister Receipt and Closure Facility Normal AC Electrical Power (Sheet 9 of 16). 1.4.1-59
1.4.1-3. Canister Receipt and Closure Facility Normal AC Electrical Power (Sheet 10 of 16). 1.4.1-61
1.4.1-3. Canister Receipt and Closure Facility Normal AC Electrical Power (Sheet 11 of 16). 1.4.1-63
1.4.1-3. Canister Receipt and Closure Facility Normal AC Electrical Power (Sheet 12 of 16). 1.4.1-65
1.4.1-3. Canister Receipt and Closure Facility Normal AC Electrical Power (Sheet 13 of 16). 1.4.1-67
1.4.1-3. Canister Receipt and Closure Facility Normal AC Electrical Power (Sheet 14 of 16). 1.4.1-69
1.4.1-3. Canister Receipt and Closure Facility Normal AC Electrical Power (Sheet 15 of 16). 1.4.1-71
1.4.1-3. Canister Receipt and Closure Facility Normal AC Electrical Power (Sheet 16 of 16). 1.4.1-73
1.4.1-4. Central Control Center Facility Normal AC Electrical Power (Sheet 1 of 4). 1.4.1-75
1.4.1-4. Central Control Center Facility Normal AC Electrical Power (Sheet 2 of 4). 1.4.1-77

FIGURES (Continued)

Page

1.4.1-4. Central Control Center Facility Normal AC Electrical Power (Sheet 3 of 4). 1.4.1-79
1.4.1-4. Central Control Center Facility Normal AC Electrical Power (Sheet 4 of 4). 1.4.1-81
1.4.1-5. Subsurface North Ramp and Panel Mains Normal AC Main Single Line Diagram (Typical) 1.4.1-83
1.4.1-6. Subsurface Facility Access Main Electrical Station Location 1.4.1-85
1.4.1-7. 13.8 kV Main Switchgear Facility Single Line Diagram Normal 125 V DC 1.4.1-87
1.4.1-8. Canister Receipt and Closure Facility 480/277 V Normal Uninterruptible Power Supply Inverter. 1.4.1-89
1.4.1-9. Canister Receipt and Closure Facility 208/120 V Normal Uninterruptible Power Supply Inverter. 1.4.1-91
1.4.1-10. Emergency Diesel Generator Facility ITS Train A 13.8 kV Single Line Diagram 1.4.1-93
1.4.1-11. Emergency Diesel Generator Facility ITS Train B 13.8 kV Single Line Diagram 1.4.1-95
1.4.1-12. Canister Receipt and Closure Facility ITS AC Electrical Power Train A (Sheet 1 of 2) 1.4.1-97
1.4.1-12. Canister Receipt and Closure Facility ITS AC Electrical Power Train A (Sheet 2 of 2) 1.4.1-99
1.4.1-13. Canister Receipt and Closure Facility ITS AC Electrical Power Train B (Sheet 1 of 2) 1.4.1-101
1.4.1-13. Canister Receipt and Closure Facility ITS AC Electrical Power Train B (Sheet 2 of 2) 1.4.1-103
1.4.1-14. Wet Handling Facility ITS AC Electrical Power Train A (Sheet 1 of 2) 1.4.1-105
1.4.1-14. Wet Handling Facility ITS AC Electrical Power Train A (Sheet 2 of 2) 1.4.1-107
1.4.1-15. Wet Handling Facility ITS AC Electrical Power Train B (Sheet 1 of 2) 1.4.1-109
1.4.1-15. Wet Handling Facility ITS AC Electrical Power Train B (Sheet 2 of 2) 1.4.1-111
1.4.1-16. Emergency Diesel Generator Facility ITS Train A 480 V Single Line Diagram 1.4.1-113
1.4.1-17. Emergency Diesel Generator Facility ITS Train B 480 V Single Line Diagram 1.4.1-115
1.4.1-18. ITS Diesel Generators Train A Logic Diagram 1.4.1-117
1.4.1-19. ITS Diesel Generators Train B Logic Diagram 1.4.1-119
1.4.1-20. Emergency Diesel Generator Facility ITS 125 V DC Battery Subsystem Train A Single Line Diagram. 1.4.1-121
1.4.1-21. Emergency Diesel Generator Facility ITS 125 V DC Battery Subsystem Train B Single Line Diagram 1.4.1-123
1.4.1-22. Canister Receipt and Closure Facility ITS Uninterruptible Power Supply Train A 1.4.1-125
1.4.1-23. Canister Receipt and Closure Facility ITS Uninterruptible Power Supply Train B 1.4.1-127
1.4.1-24. Wet Handling Facility ITS Uninterruptible Power Supply Train A. 1.4.1-129

FIGURES (Continued)

Page

1.4.1-25. Wet Handling Facility ITS Uninterruptible Power Supply Train B 1.4.1-131
1.4.1-26. Emergency Diesel Generator Facility ITS Train A Uninterruptible Power Supply Single Line Diagram 1.4.1-133
1.4.1-27. Emergency Diesel Generator Facility ITS Train B Uninterruptible Power Supply Single Line Diagram 1.4.1-135

INTENTIONALLY LEFT BLANK

1.4.1 Electric Power

[NUREG-1804, Section 2.1.1.2.3: AC 1, AC 2, AC 3, AC 6; Section 2.1.1.6.3: AC 1, AC 2; Section 2.1.1.7.3.1: AC 1; Section 2.1.1.7.3.2: AC 1; Section 2.1.1.7.3.3(I): AC 1, AC 2, AC 4; Section 2.1.1.7.3.3(II): AC 1, AC 8; HLWRS-ISG-02 Section 2.1.1.2.3: AC 2]

The normal electrical power subsystem provides adequate and reliable electric power for construction and operation of surface and subsurface facilities during normal geologic repository operations area (GROA) operations, including the postemplacement ventilation period through closure.

The switchyard receives 138 kV power from off site and steps it down to 13.8 kV for distribution through four open buses and a transfer bus that subsequently distribute the power to the normal electric power supply for operations and to separate switchgear for construction loads. The switchyard is not important to safety (ITS).

The normal electrical power switchgear supplies electrical power to systems and components that do not perform ITS functions. During normal operations, the normal electrical power subsystem also provides power to the ITS switchgear as long as supplied power is within the acceptable voltage range. Standby power is provided to the normal electric power switchgear by four standby diesel generators for non-ITS loads that are important to the efficient operation of the facilities. The normal electrical power supply and the standby diesel generators are non-ITS.

The ITS electrical power subsystem provides power to ITS systems and equipment that require electrical power to perform a safety function in the event that the normal source is lost. The ITS AC electrical power is supplied by two ITS diesel generators that start automatically upon an undervoltage condition in the normal electrical power supply. The design bases and design criteria for the ITS electrical power subsystem are shown in Table 1.4.1-1.

1.4.1.1 Normal Electrical Power

[NUREG-1804, Section 2.1.1.2.3: AC 1(2), (3), (4), AC 2, AC 3, AC 6; Section 2.1.1.7.3.3(II): AC 1(3), AC 8(1)]

1.4.1.1.1 System Description

The normal electrical power subsystem consists of the following major subsystems:

- Switchyard and standby diesel generators
- Normal power
- Normal DC electrical power
- Normal uninterruptible power supply power.

Figure 1.4.1-1 shows the switchyard power distribution main single line, and Figure 1.4.1-2 shows the GROA and adjacent support facilities' electrical power distribution main single lines.

The electrical power distribution is supplied by two 138 kV offsite power sources that supply two main 138 kV buses (138 kV Bus A and 138 kV Bus B) in a breaker and half scheme. The two main

138 kV buses provide power to five main transformers that reduce the voltage from 138 kV to 13.8 kV. The five transformers in turn supply 13.8 kV power to four open buses (open bus #1, open bus #2, open bus #3, and open bus #4) and a transfer bus to form an open bus scheme. This configuration provides power from either of the offsite power sources to the loads. In addition, separate non-ITS standby diesel generators can be connected to any load group.

The locations of facilities that house the normal electrical power supply are shown on the site plan (Figures 1.2.1-1 and 1.2.1-2). The electrical power distribution includes a high-voltage switchyard area (Area 27A), 13.8 kV Switchgear Facility (Area 27B) with four main 13.8 kV switchgear, and a Standby Diesel Generator Facility (Area 26B) with four standby diesel generators and four 13.8 kV switchgear.

1.4.1.1.1.1 Switchyard

High-voltage overhead transmission lines enter at the southwest corner of the site. The 138 kV lines are supplied via the utility power company (BSC 2008, Section 9.10.2.1.4). Five main power transformers step down the voltage to 13.8 kV (Figure 1.4.1-1). The distribution to the open buses follows:

- Main transformer #1A feeds 13.8 kV open bus #1 through main breaker #1
- Main transformer #2A feeds 13.8 kV open bus #2 through main breaker #2
- Main transformer #1B feeds 13.8 kV open bus #3 through main breaker #4
- Main transformer #2B feeds 13.8 kV open bus #4 through main breaker #5
- Main transformer #1C feeds the 13.8 kV transfer bus through main breaker #3.

Open buses 1 through 4 supply power to the switchgear that supply power to the GROA surface facilities and adjacent support facilities, to the subsurface emplacement area facility, to the subsurface ventilation facilities located at the surface openings of the exhaust shafts, and to the balance of plant facilities. The transfer bus supplies power to surface and subsurface construction switchgear. This separation of electric power supply back to the main transformers ensures that electric power transients during construction do not impact the reliability and quality of the electric power provided to the operating facilities. The transfer bus also provides a path for distributing power to the open buses during loss of one of the two offsite power supplies or failure of a main transformer.

The switchyard power circuit breakers provide a means of protecting the main transformers.

The switchyard provides the interface between offsite and onsite electrical power. Within the switchyard fence, the switchyard contains the 13.8 kV Switchgear Facility, transmission line towers for the 138 kV offsite power sources, main step-down transformers, high-voltage circuit breakers, disconnect switches, and surge arrestors. The switchyard is designed with sufficient modularity to facilitate increasing the capacity of the switchyard during operation. The 138/13.8 kV main transformers and associated 138 kV power circuit breakers will be installed in accordance with the phased construction schedule.

The 138 kV voltage, current, megawatts, megavars, and frequency of the incoming power is monitored by transducers in the switchyard and recorded by the digital control and management information system.

The 13.8 kV Switchgear Facility is located inside the switchyard and houses four 13.8 kV main switchgear. Transformers step down the power from 13.8 kV to 480 V at the surface and subsurface facilities and to 4.16 kV at the subsurface ventilation fans. 4.16 kV is a typical industry standard voltage for the 900 hp motor sizes used on the subsurface ventilation fans. Power distribution cables from the 13.8 kV main switchgear are routed using underground concrete duct banks for nearby facilities in the GROA, for balance of plant facilities, and to the subsurface entrance. Each breaker is actuated by relays that trip the breaker on fault current and also send an indication or alarm to the Central Control Center. The main transformers and the 13.8 kV main switchgear are protected by breakers with appropriate protection relays that sense the electrical fault in their zone of protection and provide protection coordination for the incoming and outgoing power system flow.

The 13.8 kV Switchgear Facility contains the following equipment:

- 13.8 kV main switchgear
- 125 V DC batteries and battery chargers
- 125 V DC distribution panelboards
- Communication equipment
- Low-voltage distribution transformers and panels
- Lighting transformers and panels
- Protective relay panels.

1.4.1.1.1.2 Normal Power

The normal power subsystem starts from the four 13.8 kV main switchgear in the 13.8 kV Switchgear Facility in the switchyard. Power distribution cables from the 13.8 kV main switchgear route power through cables in underground concrete duct banks to nearby facilities in the GROA, to balance of plant facilities, and to the subsurface entrance. The 13.8 kV power is stepped down to 480 V at transformers located outside each facility. Cables bring the power to load centers and then distribute to motor control centers and selected loads in each surface facility. The 480 V motor control centers supply power to various process loads and building utility loads, such as cranes; pumps; fans; heating, ventilation, and air-conditioning (HVAC) units; and motor-operated valves and dampers. The 480 V motor control centers also supply power to distribution and lighting transformers, which provide power to distribution panels that supply loads, such as elevators, heaters, and lighting. The 480 V power is further stepped down to 208/120 V to supply various other loads, including lighting, receptacles, control, and instrumentation. The 480 V motor control centers also supply power to a battery charger for the normal uninterruptible power supplies. There are no ITS structures, systems, or components (SSCs) that rely upon the normal AC electrical power supply to perform an ITS function. The single-line diagrams showing the distribution of normal AC electrical power within the Canister Receipt and Closure Facility (CRCF) and the Central Control Center Facility (CCCF) are shown in Figures 1.4.1-3 and 1.4.1-4, respectively, as these are typical of the GROA surface facilities.

The subsurface power to the emplacement drifts is derived from two feeds from the 13.8 kV switchgear with backup by standby diesel generators. The cables enter the subsurface through the North Portal. The power cables for these two feeds are routed along the North ramp and access main tunnel from the North Portal to the emplacement drifts. The 13.8 kV power feeds several distribution transformers located in alcoves inside the access main to provide power at 480/277 V for equipment, such as emplacement drift shield door motors, the transport and emplacement vehicle, heaters, and lighting. The 480 V power is further stepped down to 208/120 V to supply other smaller loads, including lighting, receptacles, controls, and instrumentation. The electrical equipment in the subsurface is located in a normally accessible environment. A typical subsurface electrical power distribution single-line diagram is shown in Figure 1.4.1-5. A typical subsurface electrical alcove is shown in Figure 1.3.3-20. The locations of the subsurface facility electrical stations are shown on Figure 1.4.1-6.

13.8 kV power from the switchgear located in the Standby Diesel Generator Facility is distributed via overhead distribution lines to the subsurface ventilation facilities located at the surface openings of the exhaust shafts.

13.8 kV power from the 13.8 kV transfer bus is distributed via overhead distribution lines to surface and subsurface construction switchgear at the South Portal facilities and the North Construction Portal area. These power feeds are further stepped down to 4.16 kV and down to the lower voltages via distribution transformers. Surface construction power is provided through these same switchgear feeds.

1.4.1.1.1.3 Standby Diesel Generators

The Standby Diesel Generator Facility contains four 13.8 kV standby diesel generators: two connected to each of two 13.8 kV switchgear located in the Standby Diesel Generator Facility. The standby diesel generators are sized such that three of the four generators have sufficient power to run the non-shed loads and three of the six subsurface ventilation fans, providing continuity of cooling of the emplaced waste even upon loss of offsite power. The standby diesel generators provide power to non-ITS loads that are significant to the efficient operation of the GROA and adjacent support facilities (e.g., security equipment at building entrances, fire alarm panels, essential lighting, the CCCF, the Emergency Operations Center in the Administration Facility, security buildings, the secondary alarm station communications base station, alarm communications and display system, lighting in the protected area, select ventilation systems, and non-ITS 125 V DC battery chargers). The standby diesel generators are categorized as non-ITS SSCs (BSC 2008, Section 9.2.1.1).

1.4.1.1.1.4 Normal DC Electrical Power

125 V DC power is used for medium-voltage circuit breaker control, protective relaying, and other loads requiring DC power. The normal 125 V DC subsystem provides control power to the 13.8 kV switchgear for tripping and closing the medium-voltage circuit breakers in the normal electric power supply. The normal 125 V DC subsystem consists of two separate 125 V DC distribution panel boards, two 125 V DC battery banks, and two battery chargers. The battery chargers provide the 125 V DC to the distribution centers and keep the battery cells fully charged. The normal power to each 125 V DC distribution panel board is supplied from the 480 V AC motor control center through one of two chargers. Circuit breakers are incorporated in the design of the battery chargers

and panel boards to protect the system. Measurement and indication instruments, such as voltmeters and ammeters, are also provided for local monitoring and Central Control Center monitoring through the digital control and management information system. Any battery failure or 125 V DC supply failure is annunciated locally, as well as in the Central Control Center. The configuration also provides a third backup battery charger in case of scheduled maintenance or equipment malfunction. The normal DC electrical power subsystem is non-ITS.

The single-line diagram for the normal 125 V DC supply to the 13.8 kV Switchgear Facility is shown in Figure 1.4.1-7.

1.4.1.1.1.5 Normal Uninterruptible Power Supply Power Subsystem

For reliable operations, a normal uninterruptible power supply is used to power non-ITS facility process equipment that needs a continuous power supply to perform its function. The normal uninterruptible power supplies are non-ITS.

The normal uninterruptible power supply units are fed from 480 V AC sources of the normal power supply. In each unit, the 480 V AC is converted to DC by a rectifier/battery charger and, in turn, is converted to 480/277 V or 208/120 V, three-phase AC by an inverter. The inverters supply power to uninterruptible power distribution panels. A DC battery is connected to each unit and can supply the inverter for the time needed to complete an ongoing operation during a loss of normal power (for example, welding) or until backup generators come on line. Battery capacity for the normal uninterruptible power supply for each facility is a minimum of 15 minutes. A separate 480 V AC supply is connected through a voltage-regulating transformer for conditioning the bypass power supply connected to the uninterruptible power supply unit. This alternate or bypass power supply feeds the uninterruptible power supply distribution panel through a static transfer switch. The static transfer switch provides a means to transfer the distribution panel load from the normal inverter source to a bypass source without interruption. A maintenance bypass switch is included in the system for maintenance of the uninterruptible power supply unit without interrupting power to the loads. Each unit of the uninterruptible power supply is independent from the other units, and the power feeds are from separate power load groupings. The CRCF single-line diagrams for the normal uninterruptible power supplies are shown in Figures 1.4.1-8 and 1.4.1-9. These single-line drawings are typical for the normal uninterruptible power supply in each facility.

The uninterruptible power supply units include the following equipment:

- Uninterruptible power supply units for welding machines, with 480 V input and 480 V output. Welding machines for waste package closure are located in the CRCF and the Initial Handling Facility (IHF); the Wet Handling Facility (WHF) contains welding machines for the closure of transportation, aging, and disposal canisters loaded within the WHF.

- Uninterruptible power supply units for selected portions of the digital control and management information system and portions of the radiation/radiological monitoring system, environmental-meteorological monitoring system, communication system, and miscellaneous loads (with 480 V input, and 480 V and 208/120 V outputs). They are located in the CRCF, IHF, WHF, Receipt Facility (RF), and the CCCF.

1.4.1.1.2 Normal Electrical Power Operational Processes

Loss of Offsite Power—Loss of offsite power stops operation of electrically powered equipment in a safe manner, except those powered from an uninterruptible power supply. The standby diesel generators start automatically. The feeder breakers from the 13.8 kV switchgear buses are tripped open. After the standby diesel generators have reached their rated voltage and frequency, the first standby diesel generator is automatically connected to its 13.8 kV switchgear and loads are automatically sequenced and/or manually loaded onto the switchgear. The next standby diesel generator automatically synchronizes to the energized 13.8 kV switchgear and connects to the bus. Additional loads are automatically and/or manually added to the bus. The above occurs for both buses. The bus tie breaker remains open.

Restoration of Offsite Power—Upon return of the 138 kV power source, the Central Control Center operator coordinates a manually performed synchronization and paralleling with the normal AC electrical power source, after which the generators are disconnected and shutdown.

Seismic Shutdown—Each waste handling surface facility and the subsurface facility have non-ITS seismic shutdown features in the design. Seismic shutdown switches mounted at suitable locations in the facilities interrupt electrical power to the waste handling SSCs designed to the requirements of ASME NOG-1-2004, thus preventing movement during and after a seismic event. Power remains off to these SSCs until reset by an operator.

1.4.1.1.3 Normal Electrical Power Codes and Standards

The normal AC electrical power supply, including the subsurface facility electrical power distribution, is designed using the methods and practices of NFPA 70, *National Electrical Code*, IEEE Std 141-1993, ANSI C84.1-2006, and IEEE Std 519-1992, *IEEE Recommended Practices and Requirements for Harmonic Control in Electrical Power Systems* (BSC 2007, Section 4.3).

The standby diesel generators are designed using the methods and practices of NFPA 70; NFPA 110, *Standard for Emergency and Standby Power Systems*; and IEEE Std 446-1995, *IEEE Recommended Practice for Emergency and Standby Power Systems for Industrial and Commercial Applications* (BSC 2007, Section 4.3).

The normal DC electrical power supply is designed using the methods and practices of IEEE Std 946-2004, *IEEE Recommended Practice for the Design of DC Auxiliary Power Systems for Generating Stations* (BSC 2007, Section 4.3).

The normal uninterruptible power supply is designed using the methods and practices of NFPA 70 and ANSI/IEEE Std 944-1986, *IEEE Recommended Practice for the Application and Testing of Uninterruptible Power Supplies for Power Generating Stations* (BSC 2007, Section 4.3).

1.4.1.2 ITS Power

[NUREG-1804, Section 2.1.1.2.3: AC 1(2), (3), (4), AC 2, AC 6; Section 2.1.1.6.3: AC 1(2)(h), (2)(k), (2)(l), AC 2(2); Section 2.1.1.7.3.1: AC 1(1), (2), (3), (9); Section 2.1.1.7.3.2: AC 1(1), (2); Section 2.1.1.7.3.3(I): AC 1(1), AC 2(1), (2), AC 4(1); Section 2.1.1.7.3.3(II): AC 8(3), (4)]

1.4.1.2.1 System Description

The ITS power supply consists of the following:

- 13.8 kV ITS diesel generators A and B
- 13.8 kV ITS switchgear A and B
- 13.8 kV ITS breaker automatic load sequencers
- 13.8 kV to 480 V ITS transformers
- 480 V ITS load centers
- 480 V ITS motor control centers
- 125 V DC ITS batteries
- ITS uninterruptible power supplies.

The ITS power subsystem supplies ITS AC electrical power to ITS SSCs that rely on electrical power to accomplish their safety functions, such as confinement HVAC units.

The design of the ITS AC electrical power supply incorporates nuclear industry practices (such as redundancy, equipment qualification, physical separation, and electrical independence) by the use of appropriate industry codes and standards listed in Section 1.4.1.2.8.

The normal preferred source of power for the ITS AC electrical power supply is the normal AC electrical power supply. 13.8 kV Open Bus #2 and 13.8 kV Open Bus #4 in the switchyard provide the normal source of electrical power for the ITS AC electrical trains. The ITS power Train A is fed from 13.8 kV ITS switchgear Train A, and ITS power Train B is fed from 13.8 kV ITS switchgear Train B. Each 13.8 kV ITS switchgear is located in a separate room within the Emergency Diesel Generator Facility (EDGF) (Area 26D). The power feeds from the 13.8 kV ITS switchgear to the ITS 13.8 kV/480 V transformers, through load centers, on to the ITS motor control centers, and on to the ITS components in the CRCF and WHF are classified as ITS. ITS AC electrical power supplied to facilities in the GROA is routed in the Train A or Train B raceway, which are separate from the normal AC electrical power supply raceway. Control power for the breakers for the 13.8 kV ITS switchgear is provided by ITS 125 V DC batteries. Control of the 13.8 kV ITS switchgear breakers is provided locally and the breakers are timed to automatically sequence on loss of normal power. Indication of breaker position is located locally at the switchgear and within the Central Control Center.

The ITS power subsystem consists of two independent and physically separated ITS diesel generators, each with an associated 13.8 kV ITS switchgear and distribution. The ITS diesel generators, as well as the mechanical systems that support the operations of the ITS diesel generators, are located at the EDGF. The EDGF and the mechanical systems associated with the ITS diesel generators are described in Section 1.2.8. Redundant and independent ITS buses allow maintenance to be performed on the equipment of one train while the equipment of the other train

is in service. The Train A and Train B 13.8 kV switchgear single-line diagrams are shown in Figures 1.4.1-10 and 1.4.1-11. The CRCF ITS AC electrical power single-line diagrams are shown in Figures 1.4.1-12 and 1.4.1-13, respectively. The WHF ITS AC electrical power single-line diagrams are shown in Figures 1.4.1-14 and 1.4.1-15. The EDGF ITS AC electrical power 480 V motor control center single-line diagrams are shown in Figures 1.4.1-16 and 1.4.1-17. There is no ITS AC electrical power distributed to the IHF or to the RF.

The ITS diesel generators are started automatically on loss of normal power. In accordance with IEEE Std 308-2001, no provisions exist for automatically connecting one ITS train to another ITS train or for automatically transferring loads between trains.

The ITS classification of the ITS AC electrical power supply starts at the ITS diesel generators and continues through the 13.8 kV ITS switchgear, to the corresponding ITS load centers and/or motor control centers located in the CRCF and WHF, and continues through to specific ITS equipment loads. This design provides reliable and timely backup power to ITS loads and instruments that are impacted if there is a loss of the normal AC electrical power supply. Each ITS diesel generator is rated to provide sufficient electrical power to support the ITS electrical loads. The voltage and frequency recovery characteristics are in accordance with Regulatory Guide 1.9. One ITS diesel generator is connected exclusively to a single 13.8 kV safety bus. There are two ITS 13.8 kV trains. The trains are independent and redundant, and one train is adequate to satisfy system safety requirements. The ITS diesel generators are electrically isolated from each other. Physical separation for fire and hazard protection is provided between the ITS diesel generators by housing them in separate rooms of the EDGF. Power and control cables for the ITS diesel generators and associated switchgear are routed to maintain physical separation.

The continuous rating of the diesel generator is based on the maximum total load required during the limiting event sequence identified in Section 1.7. The ITS diesel generator is capable of operation at less than full load for extended periods of time. Figures 1.4.1-18 and 1.4.1-19 provide the logic for startup of the ITS diesel generators.

The following conditions initiate startup of the ITS diesel generators:

- Loss of voltage or degraded voltage to the respective 13.8 kV ITS bus to which each ITS diesel generator is connected

- Manual switch actuation (diesel generator room).

Starting a diesel generator with a loss of 13.8 kV ITS bus voltage signal or manual switch actuation places that diesel generator in the ITS operation mode.

The ITS diesel generators are monitored from the switchgear rooms (Rooms 1002 and 1012) and each alarm device, when actuated, initiates an annunciator in the switchgear rooms. The alarms, where possible, are set so that they provide a warning prior to tripping of the diesel generators.

Circuit breaker electrical interlocks are provided to prevent automatic closing of an ITS diesel generator breaker to an energized or faulted bus. If the normal power has been lost, an undervoltage

signal trips the normal offsite power line incoming breakers and load circuit breakers to shed connected loads.

Upon recognition of a loss of voltage or degraded voltage on a 13.8 kV ITS bus, a logic signal is initiated (1) to start the ITS diesel generator, and (2) to trip the 13.8 kV normal power supply breaker.

Two voltage-sensing schemes for each ITS 13.8 kV bus are employed to initiate the logic signal. One scheme recognizes a loss of voltage and the other recognizes degraded voltage conditions.

To sense a loss of voltage, solid-state-type undervoltage devices are provided. Logic is provided to allow tripping of the incoming breaker on undervoltage logic signals. Additional undervoltage logic circuits are provided for each bus to recognize degraded voltage conditions. This setpoint is above the minimum motor starting voltage during normal operation; however, the time delay is selected to prevent unwanted tripping and undervoltage-induced damage to the ITS loads.

After an ITS diesel generator starts and reaches rated voltage and frequency, the generator circuit breaker connecting it to the corresponding 13.8 kV bus closes, energizing that bus and the associated load groups are sequentially loaded. The loading sequence for the ITS buses is the following:

1. EDGF
2. CRCF 1
3. CRCF 2
4. CRCF 3
5. WHF.

The ITS diesel generators are wye-wound, high-resistance grounded, and rated at 13.8 kV, 3-phase, and 60 Hz (BSC 2007, Section 4.3.1.1.29). Each ITS diesel generator can be manually started and is provided with synchronization capability to the normal AC electrical power supply for full-load testing without interrupting normal power to the ITS switchgear.

Each ITS diesel generator unit provides power to the associated ventilation equipment to maintain an acceptable environment within the EDGF. Each ITS diesel generator unit is capable of starting, accelerating, being loaded, and powering the maximum design load, including the loads to cool the diesel generator units.

Design conditions such as vibration, torsional vibration, and overspeed are considered in accordance with the requirements of IEEE Std 387-1995, *Standard Criteria for Diesel-Generator Units Applied as Standby Power Generating Stations*.

Each ITS diesel governor can operate in the droop mode and the voltage regulator can operate in the paralleled mode during ITS diesel generator testing. Each ITS diesel generator reverts to isochronous mode if normal offsite power is lost during parallel operation.

Each ITS diesel generator is provided with a control system permitting automatic and local manual control. The automatic start signal is functional except when the ITS diesel generator is in the manual mode.

Voltage, current, frequency, var, and watt metering is provided to permit assessment of the operating condition of each ITS diesel generator.

1.4.1.2.2 Operational Processes

The ITS diesel generators will undergo periodic testing in accordance with Regulatory Guide 1.9 as discussed in Section 1.4.1.2.8.

Loss of Offsite Power—Upon loss of offsite power, the incoming breakers for the 13.8 kV ITS switchgear are automatically tripped open, and the loads connected to the 13.8 kV ITS switchgear are automatically shed. Once the ITS diesel generators have reached their rated voltage and frequency, each is automatically connected to its respective bus. As soon as rated voltage is established at each 13.8 kV ITS switchgear, the load feeder circuit breakers are automatically sequenced and closed.

Restoration of Offsite Power—The ITS diesel generators are connected to their respective 13.8 kV ITS switchgear, and the switchgear supplies power to the individual motor control centers located within each handling facility. When the Central Control Center operator determines that the 138 kV line is stable, the Central Control Center operator will coordinate a manual transfer of power from the ITS diesel generators back to the normal power subsystem (which is fed from the 138 kV offsite source) by synchronizing with the offsite power to provide an uninterruptible transfer.

1.4.1.2.3 Safety Category Classification

The ITS AC electrical power supply is classified as ITS.

1.4.1.2.4 Procedural Safety Controls to Prevent Event Sequences or Mitigate Their Effects

The preclosure safety analysis identifies one procedural safety control related to the operation of components in the ITS power system. Table 1.9-10 identifies the unique numbering of the preclosure procedural safety controls, as well as the associated facility/operations area, SSCs, and bases.

PSC-8—To limit the probability that the ITS HVAC systems fail to operate upon demand, the CRCF and WHF operating procedures will identify the required status of the ITS diesel generators, mechanical support systems for the ITS diesel generators (fuel oil, air start, jacket water cooling, lubricating oil, air intake and exhaust, and EDGF HVAC), and ITS AC and DC power subsystems as a condition for commencing waste handling operations. The operating procedures will identify that the coordination of the running and loading of the ITS diesel generators after initial start-up in response to a loss of power is part of the recovery from the initiating event.

1.4.1.2.5 Design Bases and Design Criteria

The nuclear safety design bases for ITS and important-to-waste-isolation (ITWI) SSCs and features are derived from the preclosure safety analysis presented in Sections 1.6 through 1.9 and the postclosure performance assessment presented in Sections 2.1 through 2.4. The nuclear safety design bases identify the safety functions to be performed and the controlling parameters with values or ranges of values that bound the design.

The quantitative assessment of event sequences, including the evaluation of component reliability and the effects of operator action, is developed in Section 1.7. SSCs or procedural safety controls appearing in an event sequence with a prevention or mitigation safety function are described in the applicable design section of the SAR.

Section 1.9 describes the methodology for safety classification of SSCs and features of the repository. The tables in Section 1.9 present the safety classification of the SSCs and features. These tables also list the preclosure and postclosure nuclear safety design bases for each structure, system, or major component.

To demonstrate the relationship between the nuclear safety design bases and the design criteria for the repository SSCs and features, the nuclear safety design bases are repeated in the appropriate SAR sections for each individual ITS/ITWI SSC or feature that performs a safety function. The design criteria are characteristics of the ITS/ITWI SSCs or features that are utilized to implement the assigned safety functions.

The nuclear safety design bases and design criteria for the ITS power subsystem are addressed in Table 1.4.1-1.

1.4.1.2.6 Design Methodologies

The design of the ITS AC electrical power supply is consistent with industry practice in accordance with the codes and standards listed in Section 1.4.1.2.8 (BSC 2007, Section 4.3).

The physical design of the cable raceway, the spatial separation, and cable tray loading criteria are discussed below.

The cable raceway is composed of, but not limited to, metallic or nonmetallic conduits, enclosed or open cable trays, electrical boxes, and the underground electrical duct bank system.

The cable raceway is classified as non-ITS and is described in Section 1.4.1.4.6 (BSC 2008, Section 17.1.2).

The raceway configuration and cable routing within the repository adhere to the following practices. Cable trays are arranged from top to bottom, with trays containing the highest voltage cables at the top and trays containing the lowest voltage cables at the bottom. Cables installed in cable trays are listed, derated, labeled, or approved for the application in accordance with NFPA 70. Cables associated with each ITS power supply train are run in separate conduits, cable trays, or ducts. The cable raceway supporting the ITS train incorporates design enhancements that address reliability

requirements and physical separation and electrical independence. ITS and non-ITS circuits are separated such that any failure in non-ITS circuits will not impact ITS circuits, propagate any fire from non-ITS to ITS networks and vice versa. Similar separation is maintained between redundant ITS trains. Redundant trains are also separated and routed via a separate fire area in accordance with NFPA 70 (BSC 2007, Section 4.3.1.8.1).

The implementation of these design enhancements for the cable raceway supporting ITS cables is in accordance with IEEE Std 379-2000 and IEEE Std 384-1992. The individual cable qualification is addressed in Section 1.13.

The ampacity rating of cables is established in accordance with IEEE Std 835-1994, *IEEE Standard Power Cable Ampacity Tables*, and NEMA WC 51-2003, *Ampacities of Cables Installed in Cable Trays*.

Generally, power cables, feeding loads from switchgear, motor control centers, and distribution panels are sized based on 125% of the full load current at a 100% load factor.

The spacing of the cables in cable trays and the percent fill in cable trays are designed in accordance with NFPA 70, *National Electrical Code*. On a case-by-case basis, analysis may be performed to decrease spacing if the cable ampacity is derated.

Cable trays are not filled above the siderails except at transitions (e.g., elbows and cable entrances and exits) where they are routed back below the siderails within 12 in.

The minimum spacing between cable trays is 12 in. for constructability and greater where separation is required for ITS cables which are installed in accordance with IEEE 384-1992, *Standard Criteria for Independence of Class 1E Equipment and Circuits*.

1.4.1.2.7 Consistency of Materials with Design Methodologies

The materials and design methodologies used in the ITS AC electrical power supply are consistent with industry practice and are in accordance with the codes and standards listed in Section 1.4.1.2.8 (BSC 2007, Section 4.3).

Isolating circuit breakers are used as isolation devices to separate the ITS electrical supply from the non-ITS electrical supply in accordance with IEEE Standard 384-1992 (BSC 2007, Section 4.3.2.3).

1.4.1.2.8 Design Codes and Standards for AC and DC ITS Electrical Power

The ITS AC and DC electrical power supplies incorporate design features that address reliability requirements and physical separation and electrical independence. The implementation of these design features for the ITS power subsystem is accomplished by designing the ITS AC and DC electrical power systems in accordance with:

- IEEE Std 308-2001, *IEEE Standard Criteria for Class 1E Power Systems for Nuclear Power Generating Stations* (with the exception that tests are conducted on a 24-month

frequency in accordance with Regulatory Guide 1.75, *Criteria for Independence of Electrical Safety Systems*)

- IEEE Std 336-2005, *IEEE Guide for Installation, Inspection, and Testing for Class 1E Power, Instrumentation, and Control Equipment at Nuclear Facilities*
- IEEE Std 384-1992, *Standard Criteria for Independence of Class 1E Equipment and Circuits*
- IEEE Std 450-2002, *IEEE Recommended Practice for Maintenance, Testing, and Replacement of Vented Lead-Acid Batteries for Stationary Applications*
- IEEE Std 484-2002, *IEEE Recommended Practice for Installation Design and Installation of Vented Lead-Acid Batteries for Stationary Applications*
- ANSI/IEEE Std 535-1986, *IEEE Standard for Qualification of Class 1E Lead Storage Batteries for Nuclear Power Generating Stations*
- IEEE Std 572-2006, *IEEE Standard for Qualification of Class 1E Connection Assemblies for Nuclear Power Generating Stations*
- IEEE Std 603-1998, *IEEE Standard Criteria for Safety Systems for Nuclear Power Generating Stations*
- IEEE Std 650-2006, *IEEE Standard for Qualification of Class 1E Static Battery Chargers and Inverters for Nuclear Power Generating Stations*
- IEEE Std 741-1997, *IEEE Standard Criteria for the Protection of Class 1E Power Systems and Equipment in Nuclear Power Generating Stations*.

The Equipment Qualification Program that applies to the ITS AC electrical power supply is addressed in Section 1.13.

The ITS diesel generators are designed in accordance with NFPA 70; NFPA 110; IEEE Std 387-1995, *Standard Criteria for Diesel-Generator Units Applied As Standby Power Generating Stations*; and IEEE Std 446-1995, *IEEE Recommended Practice for Emergency and Standby Power Systems for Industrial and Commercial Applications* (BSC 2007, Section 4.3). Conformance with Regulatory Guide 1.9 is addressed below.

Power, control, and instrumentation cables installed in cable trays are designed in accordance with flame test performance requirements in IEEE Std 1202-2006, *IEEE Standard for Flame-Propagation Testing of Wire and Cable* (BSC 2007, Section 4.3).

The ITS 125 V DC supplies are designed in accordance with IEEE Std 484-2002, *IEEE Recommended Practice for Installation Design and Installation of Vented Lead-Acid Batteries for Stationary Applications*; IEEE Std 485-1997, *IEEE Recommended Practice for Sizing Lead-Acid*

Batteries for Stationary Applications; and IEEE Std 946-2004, *IEEE Recommended Practice for the Design of DC Auxiliary Power Systems for Generating Stations* (BSC 2007, Section 4.3).

The ITS uninterruptible power supply is designed in accordance with NFPA 70; ANSI/IEEE Std 944-1986, *IEEE Recommended Practice for the Application and Testing of Uninterruptible Power Supplies for Power Generating Stations*; and IEEE Std 1184-1994, *IEEE Guide for the Selection and Sizing of Batteries for Uninterruptible Power Systems* (BSC 2007, Section 4.3).

The design of the ITS AC and DC electrical power supply is in accordance with the following regulatory guidance:

- Regulatory Guide 1.9, *Selection, Design, Qualification, and Testing of Emergency Diesel Generator Units Used as Class 1E Onsite Electric Power Systems at Nuclear Power Plants*.

  The following clarifications are used in the design of the ITS diesel generators: the design follows IEEE Std 387-1995 instead of IEEE Std 387-1984; there is no safety injection actuation signal; the ITS diesel generators can respond to a loss of offsite power event per the evaluation by preclosure safety analysis; the ITS diesel generators only start on a loss of offsite power and synchronizing is not required; reporting requirements are from 10 CFR 63.73 and not 10 CFR Part 50.

- Regulatory Guide 1.41, *Preoperational Testing of Redundant On-Site Electric Power System to Verify Proper Load Group Assignments*.

1.4.1.2.9 Load Combinations Used for Normal and Category 1 and Category 2 Event Sequence Conditions

Structural design and load combinations are discussed in Section 1.2.2.1.

The preclosure safety assessment presented in Sections 1.6 through 1.9 demonstrates that the ITS electrical power SSCs are not required to mitigate the consequences of an event sequence during or following a seismic event. Therefore, design of the electric power system SSCs and raceways supporting ITS cables is done using the methods and practices of the *International Building Code 2000* (ICC 2003).

1.4.1.3 ITS DC Electrical Power and Uninterruptible Power Supply

[NUREG-1804, Section 2.1.1.2.3: AC 1(2), (3), (4), AC 2, AC 6; Section 2.1.1.6.3: AC 1(2)(h), (2)(k), (2)(l), AC 2(2); Section 2.1.1.7.3.1: AC 1(1), (2), (3), (9); Section 2.1.1.7.3.2: AC 1(1), (2); Section 2.1.1.7.3.3(I): AC 1(1), AC 2(1), (2), AC 4(1)]

1.4.1.3.1 System Description

The ITS DC power subsystem provides control power to ITS switchgear. The ITS uninterruptible power supply power subsystems provide power to ITS instruments and for the digital control and management information system.

The ITS 125 V DC power supply provides control power for tripping and closing the 13.8 kV ITS switchgear circuit breakers. The supply consists of two redundant and independent 125 V DC battery banks with their associated chargers and distribution panels. The EDGF single-line diagrams for the Train A and Train B ITS 125 V DC power supplies are shown on Figures 1.4.1-20 and 1.4.1-21, respectively.

One ITS 125 V DC power supply provides breaker control power to the same train 13.8 kV ITS switchgear. The other ITS 125 V DC power supply provides breaker control power to the other train 13.8 kV ITS switchgear. The ITS 125 V DC power supply consists of 125 V DC distribution panel boards, 125 V DC battery banks, and battery chargers. The ITS battery chargers that power the ITS 125 V DC distribution panel boards are fed from a 480 V AC power source, which is fed from the ITS AC electrical power supply. Circuit breakers are incorporated in the design of the battery charger and panel board to protect the system. Measurement and indication instruments, such as voltmeters and ammeters, are also provided for local monitoring and Central Control Center monitoring. A battery failure, of the 125 V DC power supply, is annunciated locally, as well as in the Central Control Center. The ITS battery chargers provide 125 V DC to the distribution panel boards and keep the battery cells charged. As described in the discussion on the normal electrical power supply (Section 1.4.1.1), the ITS 125 V DC supply provides power to the 13.8 kV ITS buses A and B breaker control and protective relay circuits.

The ITS 125 V DC power supplies are housed in separate rooms of the EDGF that are separated by physical barriers. Physical separation and isolation prevent a fault in one load group from affecting the other load group (BSC 2007, Section 4.3.2.3). Each 125 V DC battery is separately housed in a ventilated room apart from its chargers and distribution equipment.

Batteries are sized in accordance with IEEE Std 485-1997, *IEEE Recommended Practice for Sizing Lead-Acid Batteries for Stationary Applications*, to have sufficient capacity to supply the required loads for a duration of 8 hours. Each 125 V DC battery is provided with one battery charger, which is sized and designed in accordance with the requirements of IEEE Std 446-1995 and IEEE Std 946-2004.

Battery rooms are ventilated to remove the hydrogen gases that may be produced during charging of the batteries. The ventilation system for the ITS batteries is ITS (Section 1.2.8.3.1). The battery rooms are also equipped with hydrogen gas detectors that are connected to the digital control and management information system.

The ITS uninterruptible power supply units located within the CRCF and WHF are classified as ITS SSCs. The ITS uninterruptible power supply units feed the ITS instrumentation that is needed to support ITS equipment.

The ITS uninterruptible power supply units are supplied from an ITS 480 V AC source. The system is composed of independent and redundant uninterruptible power supplies, each supplying an associated bus by battery charger through a static inverter. The components of the ITS uninterruptible power supply units are similar to the uninterruptible power supply units described in the normal power supply section. These ITS uninterruptible power supply units are located locally in the facilities in which these units are required (BSC 2007, Section 4.3.1.1.27).

The CRCF ITS uninterruptible power supply inverter single-line diagrams are shown in Figures 1.4.1-22 and 1.4.1-23. The WHF ITS uninterruptible power supply inverter single-line diagrams are shown in Figures 1.4.1-24 and 1.4.1-25. The EDGF ITS uninterruptible power supply inverter single-line diagrams are shown in Figures 1.4.1-26 and 1.4.1-27.

1.4.1.3.2 Operational Processes

Operation of both the ITS 125 V DC subsystem and the ITS uninterruptible power supply subsystems are similar and automatic.

If an AC undervoltage condition in the EDGF ITS 125 V DC subsystem is sensed at the battery charger a trouble alarm is annunciated locally and in the Central Control Center. 125 V DC power is then supplied by the battery without impact to the DC loads. Equipment connected to the DC power supply operates continuously up to a maximum of 140 V DC, which exists during the period that the batteries are being equalized. Equipment also operates down to a minimum of 105 V DC.

Similarly for the ITS uninterruptible power supply subsystems, upon loss of normal AC input power to the uninterruptible power supply, power is supplied by the uninterruptible power supply battery through the inverter to provide AC power at the required voltage to the uninterruptible power supply panel. If the ITS inverter fails, the ITS static transfer switch automatically switches over to the ITS bypass source within a quarter cycle.

The components of the ITS 125 V DC power supply will undergo periodic maintenance to determine the condition of each individual unit. Batteries are checked for liquid level, specific gravity, and cell voltage and are visually inspected following the manufacturer's recommended guidelines. An initial test of onsite AC and DC power supplies will be performed as a prerequisite to initial operation. This test will establish that the capacity of each battery is sufficient to satisfy a real-time safety load demand profile under the conditions of loss of offsite power. Thereafter, periodic capacity tests will be conducted in accordance with IEEE Std 450-2002, and the manufacturer's schedule recommended for cyclic test discharge and equalizing charge rates. These tests will ensure that the battery has the capacity to continue to meet safety load demands. Battery chargers are periodically checked by visual inspection and performance tests.

1.4.1.3.3 Safety Category Classification

The ITS DC electrical power and ITS uninterruptible power supplies are classified as ITS.

1.4.1.3.4 Procedural Safety Controls to Prevent Event Sequences or Mitigate Their Effects

The preclosure safety analysis identifies one procedural safety control related to the ITS electrical power system. Table 1.9-10 identifies the unique numbering of the preclosure procedural safety controls, as well as the associated facility/operations area, SSCs, and bases. PSC-8 is addressed in Section 1.4.1.2.4.

1.4.1.3.5 Design Bases and Design Criteria

The nuclear safety design bases and design criteria for the ITS DC electrical power and uninterruptible power supply subsystems are provided in Table 1.4.1-1.

1.4.1.3.6 Design Methodologies

The ITS DC electrical power and ITS uninterruptible power supplies are designed consistent with industry practice in accordance with the codes and standards listed in Section 1.4.1.2.8.

1.4.1.3.7 Consistency of Materials with Design Methodologies

The materials used in the ITS DC electrical power and ITS uninterruptible power supplies are consistent with industry practice and are in accordance with the codes and standards listed in Section 1.4.1.2.8.

1.4.1.3.8 Design Codes and Standards

Design codes and standards for the ITS DC electrical power and ITS uninterruptible power supplies are the same as those listed in Section 1.4.1.2.8.

1.4.1.3.9 Load Combinations Used for Normal and Category 1 and Category 2 Event Sequence Conditions

The design of the raceway for the ITS DC electrical power and uninterruptible power supplies is as described in Section 1.4.1.2.9.

1.4.1.4 Electrical Support Subsystems

[NUREG-1804, Section 2.1.1.2.3: AC 1(2), (3), (4), AC 2(1), (2), (3), AC 3, AC 6; Section 2.1.1.7.3.3(II): AC 8(2)]

The electrical support system includes the following subsystems (BSC 2008, Section 17.1.1):

- Lighting
- Grounding
- Lightning protection
- Cathodic protection
- Heat tracing
- Cable raceway.

The electrical support subsystems are non-ITS and interface with SSCs throughout the site. Lighting is provided where needed. The grounding subsystem provides interface to the electric power supply by providing a low-resistance path to ground. Lightning protection is provided to the buildings and outdoor elevated structures. The cathodic protection subsystem throughout the GROA and adjacent support facilities serves SSCs where metallic equipment, piping, or structures are in contact with the ground. The heat tracing subsystem interfaces with outdoor process pipes, instrument sensing lines, and tanks that contain liquids to maintain liquids above their freezing

points. The cable raceway use standard tray, conduit, and duct banks to route power and control cables and wiring to deliver power to electrical loads and control systems.

No operational processes are developed for these subsystems beyond what is necessary to activate and maintain them.

The function of the electrical support system is to provide support to the electrical power system and GROA and adjacent support facilities' infrastructure (BSC 2008, Section 17.1.1).

1.4.1.4.1 Lighting

The lighting subsystem provides an acceptable level of illumination. This subsystem is divided into three additional subsystems: normal, essential, and emergency lighting subsystems (BSC 2008, Section 17.2.2.1). The lighting subsystem is designed using the methods and practices of the illumination requirements of *IESNA Lighting Handbook, Reference & Application* (Rea 2005); ANSI/IESNA RP-1-04, *American National Standard Practice for Office Lighting*; ANSI/IESNA RP-7-01, *Recommended Practice for Industrial Lighting*; ANSI/IESNA RP-8-00, *Standard Practice for Roadway Lighting*; ANSI/IESNA RP-22-05, *IESNA Recommended Practice for Tunnel Lighting*; and NFPA 70, *National Electrical Code* (BSC 2007, Section 4.3).

1.4.1.4.1.1 Normal Lighting Subsystem

Normal lighting is provided in indoor and outdoor areas where a sudden loss of light does not impact personnel safety or production, such as roadways, parking areas, and other general purpose areas. The normal lighting subsystem is powered from the normal power subsystem only.

1.4.1.4.1.2 Essential Lighting Subsystem

Essential lighting is provided in areas where sudden loss of light can have an affect on production and safety of personnel. Essential lighting provides illumination to support normal operation of facilities in the GROA and adjacent support facilities and the orderly cessation of operations. The essential lighting subsystem is powered from the normal power subsystem with standby diesel generators as a backup power source.

1.4.1.4.1.3 Emergency Lighting Subsystem

Emergency lighting is provided in areas where exits from facilities are required during postulated emergencies. Emergency lighting includes egress, safeguard, and security lighting. Emergency lighting is provided in areas, such as the Central Control Center, facility operations rooms, handling facilities, and exit routes from these locations. Emergency lighting is powered by self-contained, sealed battery packs within each fixture.

1.4.1.4.2 Grounding

The grounding subsystem operates by providing a low-resistance ground return path to the facility grounding grid for dissipating fault currents into the earth. The overall grounding subsystem is a single grounding network that interconnects the North Portal, South Portal, North Construction

Portal construction area, balance of plant, and ventilation system areas, as well as the surface and subsurface facilities. The grounding subsystem is composed of a network of buried, embedded, or exposed bare copper cables with grounding rods that are interconnected to form a grid to which electrical equipment and system grounds, building grounds, and structural steel are connected. The ground grid is designed using the methods and practices of IEEE Std 80-2000, *IEEE Guide for Safety in AC Substation Grounding*, and IEEE Std 142-1991, *IEEE Recommended Practice for Grounding of Industrial and Commercial Power Systems*. Neutral and equipment grounding is designed using the methods and practices of IEEE Std 665-1995, *IEEE Standard for Generating Station Grounding* (BSC 2007, Section 4.3).

1.4.1.4.3 Lightning Protection

Lightning protection for buildings and other elevated outdoor structures is provided by installing strike termination devices, such as air terminals or vertical rods located above the structures, and a conductor system connected to ground rods that are connected to the ground grid. The down conductors serve as the low impedance path to the ground to allow lightning strikes to discharge to the earth. The installation for the lightning protection subsystem is designed using the methods and practices of NFPA 780, *Standard for the Installation of Lightning Protection Systems*; and UL 96A, *Installation Requirements for Lightning Protection Systems*. The surge protection to avoid equipment damage due to lightning discharge is designed using the methods and practices of IEEE Std C62.23-1995, *IEEE Application Guide for Surge Protection of Electric Generating Plants* (BSC 2007, Section 4.3).

1.4.1.4.4 Cathodic Protection

Cathodic corrosion protection is provided for buried metallic pipes and structures and for metallic pipes and structures in contact with the ground. The design uses an impressed current system that connects them to the DC output of rectifiers powered by 480 V AC or 120 V AC. Protection is accomplished by forcing the metallic structure to act as a cathode.

The cathodic protection subsystem is designed using the methods and practices of applicable sections of NACE Standard RP0169-2002, *Standard Recommended Practice, Control of External Corrosion on Underground or Submerged Metallic Piping Systems*, and NACE Standard RP0572-2001, *Standard Recommended Practice, Design, Installation, Operation, and Maintenance of Impressed Current Deep Groundbeds* (BSC 2007, Section 4.3).

1.4.1.4.5 Heat Tracing

The heat tracing subsystem includes heating elements, a temperature-sensing unit, a temperature controller, and an electrical circuit supply. The heat tracing subsystem is designed to keep liquid-filled pipes and tanks functional if temperatures approach levels that would inhibit liquid flow.

The heat tracing subsystem is designed using the methods and practices of IEEE Std 515-2004, *IEEE Standard for the Testing, Design, Installation, and Maintenance of Electrical Resistance Heat Tracing for Industrial Applications.*

1.4.1.4.6 Cable Raceway

The cable raceway that provides electrical and control power to non-ITS electrical loads and non-ITS control systems is physically and electrically separate from the cable raceway supporting ITS cables. Cables are listed, derated, labeled, or approved using the methods and practices of NFPA 70. The cable raceway is adequately supported where necessary to preclude unacceptable spatial interactions with ITS SSCs.

1.4.1.4.7 Design Codes and Standards

The codes and standards applicable to the electrical support system are listed below:

- ANSI/IESNA RP-1-04, *American National Standard Practice for Office Lighting*
- ANSI/IESNA RP-7-01, *Recommended Practice for Industrial Lighting*
- ANSI/IESNA RP-8-00, *Standard Practice for Roadway Lighting*
- ANSI/IESNA RP-22-05, *IESNA Recommended Practice for Tunnel Lighting*
- IEEE Std C62.23-1995, *IEEE Application Guide for Surge Protection of Electric Generating Plants*
- IEEE Std 80-2000, *IEEE Guide for Safety in AC Substation Grounding*
- IEEE Std 142-1991, *IEEE Recommended Practice for Grounding of Industrial and Commercial Power Systems*
- IEEE Std 515-2004, *IEEE Standard for the Testing, Design, Installation, and Maintenance of Electrical Resistance Heat Tracing for Industrial Applications*
- IEEE Std 665-1995, *IEEE Guide for Generating Station Grounding*
- NACE Standard RP0572-2001, *Standard Recommended Practice, Design, Installation, Operation, and Maintenance of Impressed Current Deep Groundbeds*
- NACE Standard RP0169-2002, *Standard Recommended Practice, Control of External Corrosion on Underground or Submerged Metallic Piping Systems*
- NFPA 70, *National Electrical Code*
- NFPA 780, *Standard for the Installation of Lightning Protection Systems*
- *IESNA Lighting Handbook, Reference & Application* (Rea 2005)
- UL 96A, *Installation Requirements for Lightning Protection Systems*.

1.4.1.5 General References

ANSI C84.1-2006. 2006. *Electric Power Systems and Equipment—Voltage Ratings (60 Hertz)*. Rosslyn, Virginia: National Electrical Manufacturers Association. TIC: 259766.

ANSI/IEEE Std 535-1986. *IEEE Standard for Qualification of Class 1E Lead Storage Batteries for Nuclear Power Generating Stations*. New York, New York: Institute of Electrical and Electronics Engineers. TIC: 238290.

ANSI/IEEE Std 944-1986. 1996. *IEEE Recommended Practice for the Application and Testing of Uninterruptible Power Supplies for Power Generating Stations*. New York, New York: Institute of Electrical and Electronics Engineers. TIC: 255429.

ANSI/IESNA RP-1-04. 2004. *American National Standard Practice for Office Lighting*. New York, New York: Illuminating Engineering Society of North America. TIC: 257502.

ANSI/IESNA RP-7-01. 2004. *Recommended Practice for Industrial Lighting*. New York, New York: Illuminating Engineering Society of North America. TIC: 258807.

ANSI/IESNA RP-8-00. 2004. *Standard Practice for Roadway Lighting*. New York, New York: Illuminating Engineering Society of North America. TIC: 257224.

ANSI/IESNA RP-22-05. 2005. *IESNA Recommended Practice for Tunnel Lighting*. New York, New York: Illuminating Engineering Society of North America. TIC: 258669.

ASME NOG-1-2004. 2005. *Rules for Construction of Overhead and Gantry Cranes (Top Running Bridge, Multiple Girder)*. New York, New York: American Society of Mechanical Engineers. TIC: 257672.

BSC (Bechtel SAIC Company) 2007. *Project Design Criteria Document*. 000-3DR-MGR0-00100-000-007. Las Vegas, Nevada: Bechtel SAIC Company. ACC: ENG.20071016.0005.

BSC 2008. *Basis of Design for the TAD Canister–Based Repository Design Concept*. 000-3DR-MGR0-00300-000-002. Las Vegas, Nevada: Bechtel SAIC Company. ACC: ENG.20080229.0007.

ICC (International Code Council) 2003. *International Building Code 2000*. Falls Church, Virginia: International Code Council. TIC: 251054; 257198.

IEEE Std 80-2000. *IEEE Guide for Safety in AC Substation Grounding*. New York, New York: Institute of Electrical and Electronics Engineers. TIC: 254157.

IEEE Std 141-1993. 1994. *IEEE Recommended Practice for Electric Power Distribution for Industrial Plants*. New York, New York: Institute of Electrical and Electronics Engineers. TIC: 240362.

IEEE Std 142-1991. 2006. *IEEE Recommended Practice for Grounding of Industrial and Commercial Power Systems*. 5th Edition. New York, New York: Institute of Electrical and Electronics Engineers. TIC: 258141.

IEEE Std 308-2001. 2002. *IEEE Standard Criteria for Class 1E Power Systems for Nuclear Power Generating Stations*. New York, New York: Institute of Electrical and Electronic Engineers. TIC: 252746.

IEEE Std 336-2005. 2006. *IEEE Guide for Installation, Inspection, and Testing for Class 1E Power, Instrumentation, and Control Equipment at Nuclear Facilities*. New York, New York: Institute of Electrical and Electronics Engineers. TIC: 258593.

IEEE Std 379-2000. 2001. *IEEE Standard Application of the Single-Failure Criterion to Nuclear Power Generating Station Safety Systems*. New York, New York: Institute of Electrical and Electronics Engineers. TIC: 255427.

IEEE Std 384-1992. 1998. *Standard Criteria for Independence of Class 1E Equipment and Circuits*. New York, New York: Institute of Electrical and Electronics Engineers. TIC: 258693.

IEEE Std 387-1984. *Standard Criteria for Diesel-Generator Units Applied as Standby Power Supplies for Nuclear Power Generating Stations*. New York, New York: Institute of Electrical and Electronics Engineers. TIC: 232365.

IEEE Std 387-1995. 2001. *Standard Criteria for Diesel-Generator Units Applied as Standby Power Generating Stations*. New York, New York: Institute of Electrical and Electronics Engineers. TIC: 258750.

IEEE Std 446-1995. *IEEE Recommended Practice for Emergency and Standby Power Systems for Industrial and Commercial Applications*. New York, New York: Institute of Electrical and Electronics Engineers. TIC: 242952.

IEEE Std 450-2002. 2003. *IEEE Recommended Practice for Maintenance, Testing, and Replacement of Vented Lead-Acid Batteries for Stationary Applications*. New York, New York: Institute of Electrical and Electronics Engineers. TIC: 256581.

IEEE Std 484-2002. 2003. *IEEE Recommended Practice for Installation Design and Installation of Vented Lead-Acid Batteries for Stationary Applications*. New York, New York: Institute of Electrical and Electronics Engineers. TIC: 256025.

IEEE Std 485-1997. 2003. *IEEE Recommended Practice for Sizing Lead-Acid Batteries for Stationary Applications*. New York, New York: Institute of Electrical and Electronics Engineers. TIC: 256688.

IEEE Std 515-2004. *IEEE Standard for the Testing, Design, Installation, and Maintenance of Electrical Resistance Heat Tracing for Industrial Applications*. New York, New York: Institute of Electrical and Electronics Engineers. TIC: 256235.

IEEE Std 519-1992. 1993. *IEEE Recommended Practices and Requirements for Harmonic Control in Electrical Power Systems.* New York, New York: Institute of Electrical and Electronics Engineers. TIC: 254111.

IEEE Std 572-2006. *IEEE Standard for Qualification of Class 1E Connection Assemblies for Nuclear Power Generating Stations*. New York, New York: Institute of Electrical and Electronics Engineers. TIC: 259770.

IEEE Std 603-1998. *IEEE Standard Criteria for Safety Systems for Nuclear Power Generating Stations*. New York, New York: Institute of Electrical and Electronics Engineers. TIC: 242993.

IEEE Std 650-2006. *IEEE Standard for Qualification of Class 1E Static Battery Chargers and Inverters for Nuclear Power Generating Stations*. New York, New York: Institute of Electrical and Electronics Engineers. TIC: 258695.

IEEE Std 665-1995. 2001. *IEEE Guide for Generating Station Grounding*. New York, New York: Institute of Electrical and Electronics Engineers. TIC: 257258.

IEEE Std 741-1997. 2002. *IEEE Standard Criteria for the Protection of Class 1E Power Systems and Equipment in Nuclear Power Generating Stations.* New York, New York: Institute of Electrical and Electronics Engineers. TIC: 255428.

IEEE Std 835-1994. 2006. *IEEE Standard Power Cable Ampacity Tables*. New York, New York: Institute of Electrical and Electronics Engineers. TIC: 259267.

IEEE Std 946-2004. 2005. *IEEE Recommended Practice for the Design of DC Auxiliary Power Systems for Generating Stations*. New York, New York: Institute of Electrical and Electronics Engineers. TIC: 258677.

IEEE Std 1184-1994. 1995. *IEEE Guide for the Selection and Sizing of Batteries for Uninterruptible Power Systems*. New York, New York: Institute of Electrical and Electronics Engineers. TIC: 254113.

IEEE Std 1202-2006. *IEEE Standard for Flame-Propagation Testing of Wire and Cable*. New York, New York: Institute of Electrical and Electronics Engineers. TIC: 258697.

IEEE Std C62.23-1995. 2001. *IEEE Application Guide for Surge Protection of Electric Generating Plants*. New York, New York: Institute of Electrical and Electronics Engineers. TIC: 257259.

NACE Standard RP0169-2002. *Standard Recommended Practice, Control of External Corrosion on Underground or Submerged Metallic Piping Systems*. Houston, Texas: National Association of Corrosion Engineers. TIC: 254895.

NACE Standard RP0572-2001. *Standard Recommended Practice, Design, Installation, Operation, and Maintenance of Impressed Current Deep Groundbeds*. Houston, Texas: National Association of Corrosion Engineers. TIC: 257208.

NEMA WC 51-2003. 2004. *Ampacities of Cables Installed in Cable Trays*. Rosslyn, Virginia: National Electrical Manufacturers Association. TIC: 255994.

NFPA 70. 2005. *National Electrical Code*. 2005 Edition. Quincy, Massachusetts: National Fire Protection Association. TIC: 258735.

NFPA 110. 2005. *Standard for Emergency and Standby Power Systems.* 2005 Edition. Quincy, Massachusetts: National Fire Protection Association. TIC: 257240.

NFPA 780. 2004. *Standard for the Installation of Lightning Protection Systems*. 2004 Edition. Quincy, Massachusetts: National Fire Protection Association. TIC: 257246.

Rea, M.S., ed. 2005. *IESNA Lighting Handbook, Reference & Application*. 9th Edition. New York, New York: Illuminating Engineering Society of North America. TIC: 257855.

Regulatory Guide 1.9, Rev. 3. 1993. *Selection, Design, Qualification, and Testing of Emergency Diesel Generator Units Used as Class 1E Onsite Electric Power Systems at Nuclear Power Plants*. Washington, D.C.: U.S. Nuclear Regulatory Commission. TIC: 238563.

Regulatory Guide 1.41. 1973. *Preoperational Testing of Redundant On-Site Electric Power System to Verify Proper Load Group Assignments.* Washington, D.C.: U.S. Nuclear Regulatory Commission. TIC: 2706.

Regulatory Guide 1.75. 2005. *Criteria for Independence of Electrical Safety Systems*. Washington, D.C.: U.S. Nuclear Regulatory Commission. ACC: MOL.20070926.0185.

UL 96A. 2005. *Installation Requirements for Lightning Protection Systems*. 11th Edition. Northbrook, Illinois: Underwriters Laboratories. TIC: 258761.

Table 1.4.1-1. Preclosure Nuclear Safety Design Bases and their Relationship to Design Criteria for the Electrical Systems

System or Facility (System Code)	Subsystem or Function (as Applicable)	Component	Nuclear Safety Design Bases		Design Criteria
			Safety Function	Controlling Parameters and Values	
Electrical Power System (EE)	ITS Power	ITS distribution (feeders up to and including ITS loads, ITS direct current power, ITS uninterruptible power supply power)	Provide electrical power to ITS surface nuclear confinement HVAC systems	EE.CR.01. The mean conditional probability for ITS electrical power distribution failure, given the loss of offsite power, shall be less than or equal to 7×10^{-3} over a period of 720 hours following a radionuclide release.	The raceway and ITS electrical distribution equipment are required to be electrically independent and physically separated. The ITS diesel generator switchgear is required to be isolated from the normal electrical power system upon a loss of offsite power. The ITS loads are required to be automatically sequenced on to the ITS diesel generators.
		ITS diesel generators (including ITS diesel generator fuel oil system, ITS diesel generator air start system, ITS diesel generator jacket water cooling system, ITS diesel generator lubricating oil system, ITS diesel generator air intake and exhaust system)	Provide electrical power to ITS surface nuclear confinement HVAC systems	EE.CR.02. The mean conditional probability for ITS electrical power failure, given the loss of offsite power, shall be less than or equal to 3×10^{-1} over a period of 720 hours following a radionuclide release.	Two independent diesel generators are required. Each ITS diesel is required to have support systems that are electrically and physically independent from the support systems for the other ITS diesel generator. Each ITS diesel generator fuel oil storage tank is required to be sized for 14 days of continuous operation and capable of online refilling.
Surface Nonconfinement HVAC System (VN)	Surface Nonconfinement HVAC	Portions of the surface nonconfinement HVAC system that support the cooling of ITS electrical equipment and battery rooms (EDGF)	Support ITS electrical function	VN.CR.01. The mean conditional probability of failure of the portions of the surface nonconfinement HVAC system that support the cooling of ITS electrical equipment and battery rooms in the EDGF shall be less than or equal to 2×10^{-2} per ITS electrical train over a period of 720 hours following a radionuclide release.	The HVAC subsystem that provides cooling for the ITS electrical equipment and battery rooms in the EDGF is required to have an independent train for the rooms associated with each of the two ITS electrical trains.

Table 1.4.1-1. Preclosure Nuclear Safety Design Bases and their Relationship to Design Criteria for the Electrical Systems (Continued)

System or Facility (System Code)	Subsystem or Function (as Applicable)	Component	Nuclear Safety Design Bases		Design Criteria
			Safety Function	Controlling Parameters and Values	
Electrical Power System (EE)	ITS Power	ITS distribution (feeders up to and including ITS loads, ITS direct current power, ITS uninterruptible power supply power)	Provide electrical power to ITS surface nuclear confinement HVAC systems (Continued)	EE.WH.01. The mean conditional probability for ITS electrical power distribution failure shall be less than or equal to 8×10^{-3} over a period of 720 hours following a radionuclide release.	The raceway and ITS electrical distribution equipment are required to be electrically independent and physically separated. The ITS diesel generator switchgear is required to be isolated from the normal electrical power system upon a loss of offsite power. The ITS loads are required to be automatically sequenced on to the ITS diesel generators.
				EE.WH.02. The mean conditional probability for ITS electrical power distribution failure shall be less than or equal to 5×10^{-4} over a period of 24 hours following a cask overpressure or a cooling system line break.	The raceway and ITS electrical distribution equipment are required to be electrically independent and physically separated. The ITS diesel generator switchgear is required to be isolated from the normal electrical power system upon a loss of offsite power. The ITS loads are required to be automatically sequenced on to the ITS diesel generators.
		ITS diesel generators (including ITS diesel generator fuel oil system, ITS diesel generator air start system, ITS diesel generator jacket water cooling system, ITS diesel generator lubricating oil system, ITS diesel generator air intake and exhaust system)	Provide electrical power to ITS surface nuclear confinement HVAC systems	EE.WH.03. The mean conditional probability for ITS electrical power failure, given the loss of offsite power, shall be less than or equal to 3×10^{-1} over a period of 720 hours following a radionuclide release.	Two independent diesel generators are required. Each ITS diesel is required to have support systems that are electrically and physically independent from the support systems for the other ITS diesel generator. Each ITS diesel generator fuel oil storage tank is required to be sized for 14 days of continuous operation and capable of online refilling.

Table 1.4.1-1. Preclosure Nuclear Safety Design Bases and their Relationship to Design Criteria for the Electrical Systems (Continued)

System or Facility (System Code)	Subsystem or Function (as Applicable)	Component	Nuclear Safety Design Bases		Design Criteria
			Safety Function	Controlling Parameters and Values	
Surface Nonconfinement HVAC System (VN)	Surface Nonconfinement HVAC	Portions of the surface nonconfinement HVAC system that support the cooling of ITS electrical equipment and battery rooms (EDGF)	Support ITS electrical function	VN.WH.01. The mean conditional probability of failure of the portions of the surface nonconfinement HVAC system that support the cooling of ITS electrical equipment and battery rooms in the EDGF shall be less than or equal to 2×10^{-2} per ITS electrical train over a period of 720 hours following a radionuclide release.	The HVAC subsystem that provides cooling for the ITS electrical equipment and battery rooms in the EDGF is required to have an independent train for the rooms associated with each of the two ITS electrical trains.

NOTE: For casks, canisters, and associated handling equipment that were previously designed, the component design will be evaluated to confirm that the controlling parameters and values are met.
Facility Codes: CR: Canister Receipt and Closure Facility; WH: Wet Handling Facility.
Infrastructure System Codes: EE: Electrical Power; VN: Surface Nonconfinement HVAC System.

INTENTIONALLY LEFT BLANK

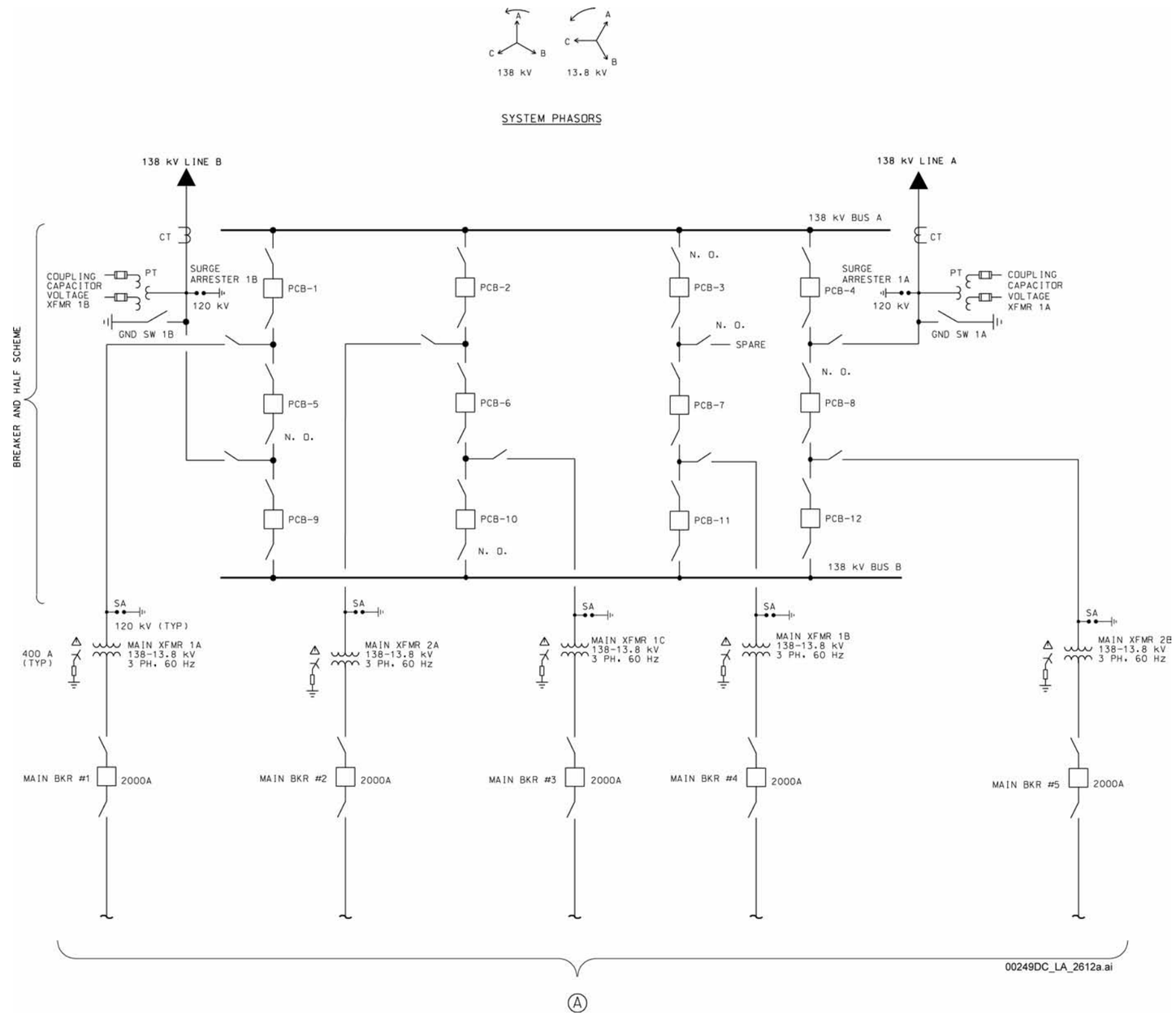

NOTE: A continues on Sheet 1 of Figure 1.4.1-2. This figure includes no SSCs that are either ITS or ITWI.
PCB = power circuit breaker.

Figure 1.4.1-1. 138 kV–13.8 kV Switchyard Power Distribution Main Single Line

INTENTIONALLY LEFT BLANK

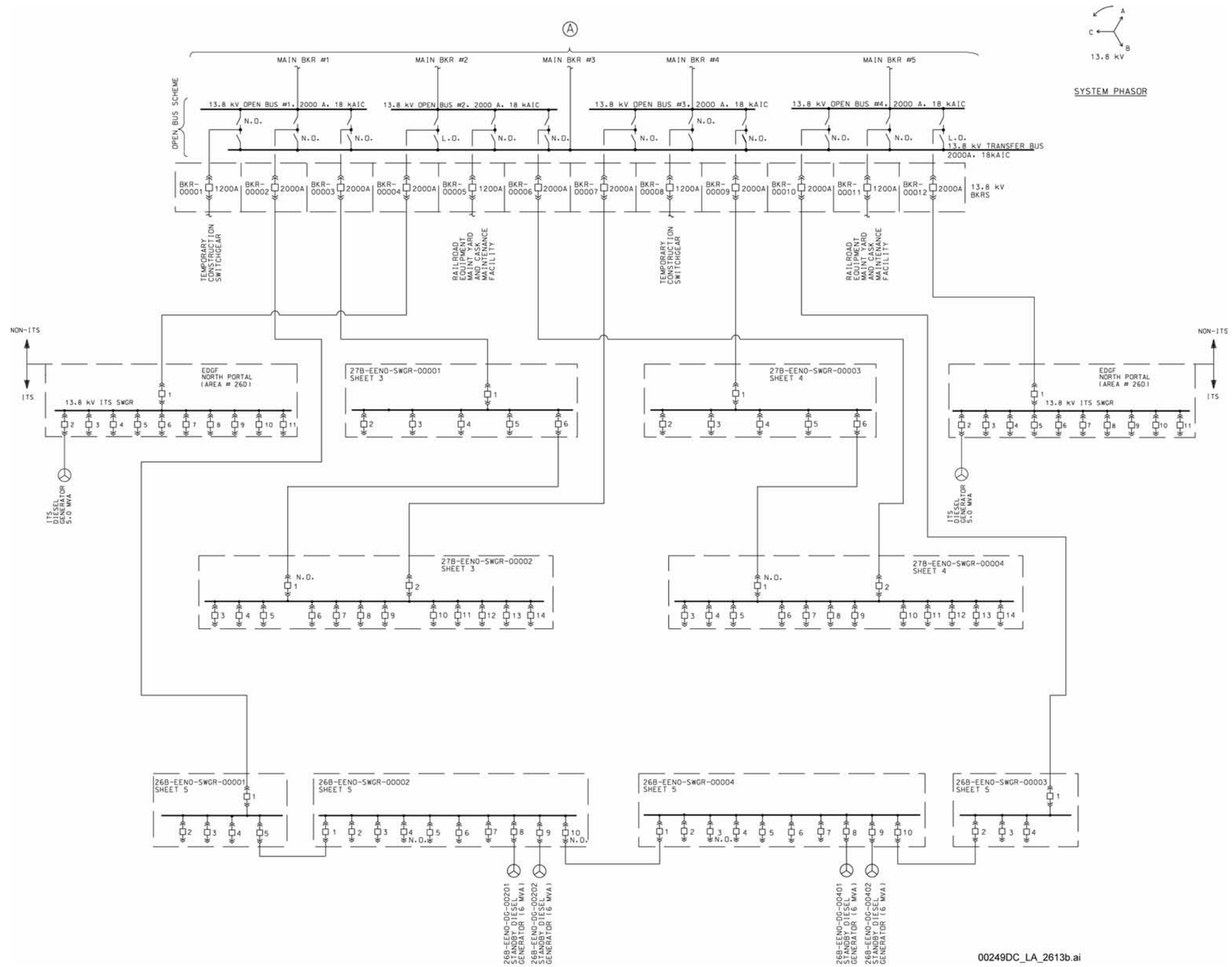

NOTE: The ITS 13.8 kV switchgear is shown in Figures 1.4.1-10 and 1.4.1-11.
A continues from Figure 1.4.1-1.

Figure 1.4.1-2. 13.8 kV Normal Power Distribution Main Single Line (Sheet 1 of 6)

INTENTIONALLY LEFT BLANK

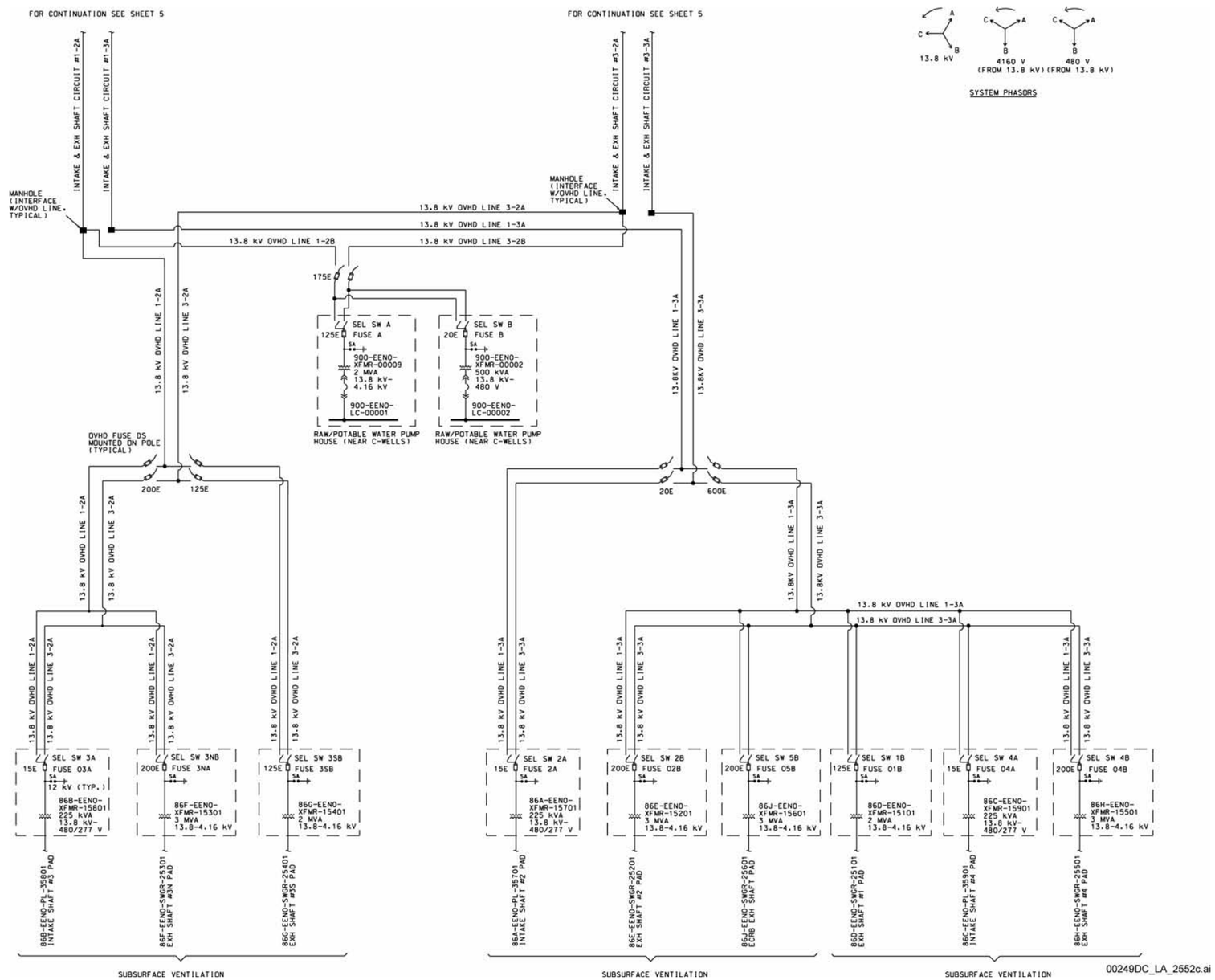

Figure 1.4.1-2. 13.8 kV Normal Power Distribution Main Single Line (Sheet 2 of 6)

NOTE: This figure includes no SSCs that are either ITS or ITWI.

INTENTIONALLY LEFT BLANK

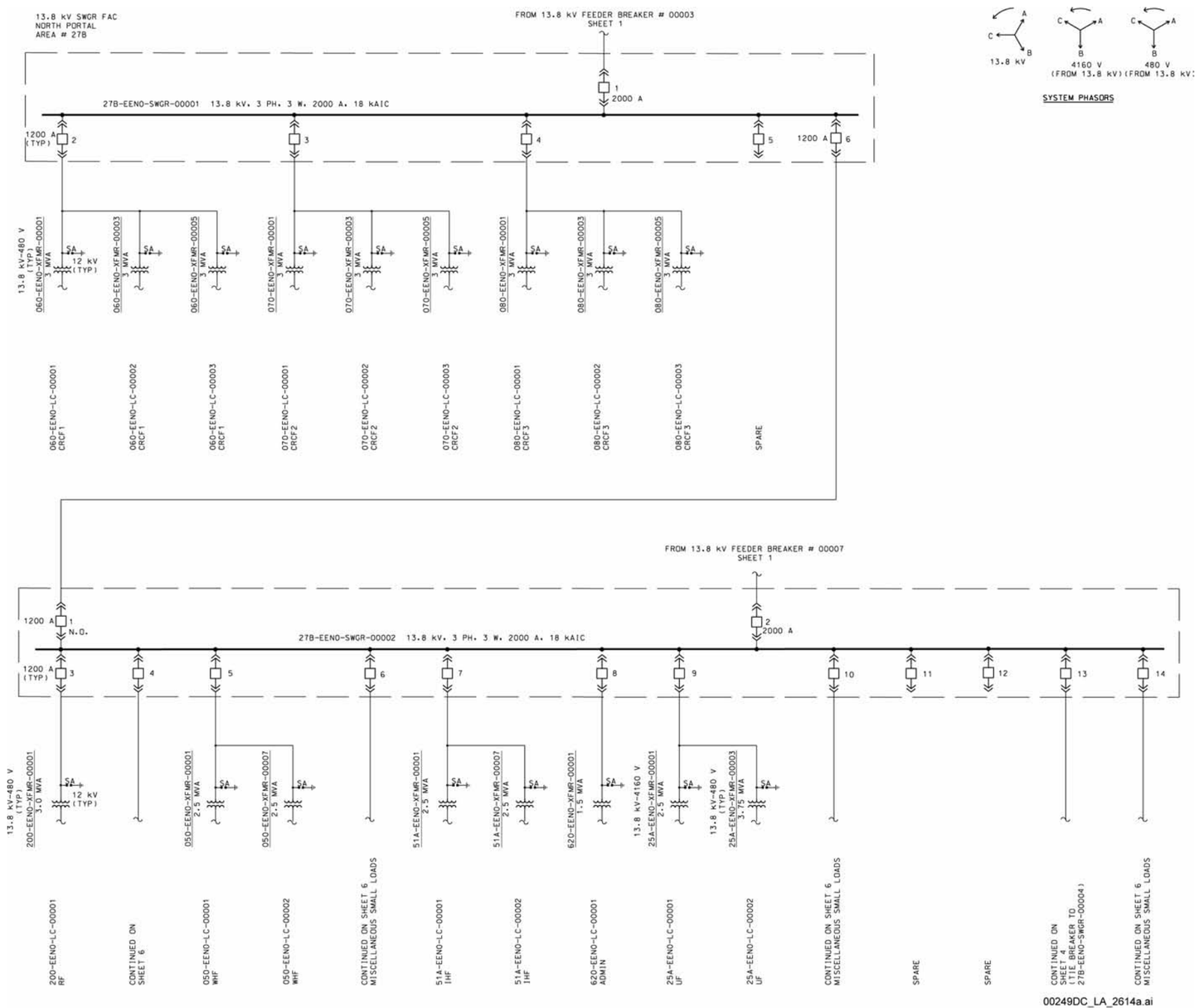

NOTE: This figure includes no SSCs that are either ITS or ITWI.
UF = Utility Facility.

Figure 1.4.1-2. 13.8 kV Normal Power Distribution Main Single Line (Sheet 3 of 6)

INTENTIONALLY LEFT BLANK

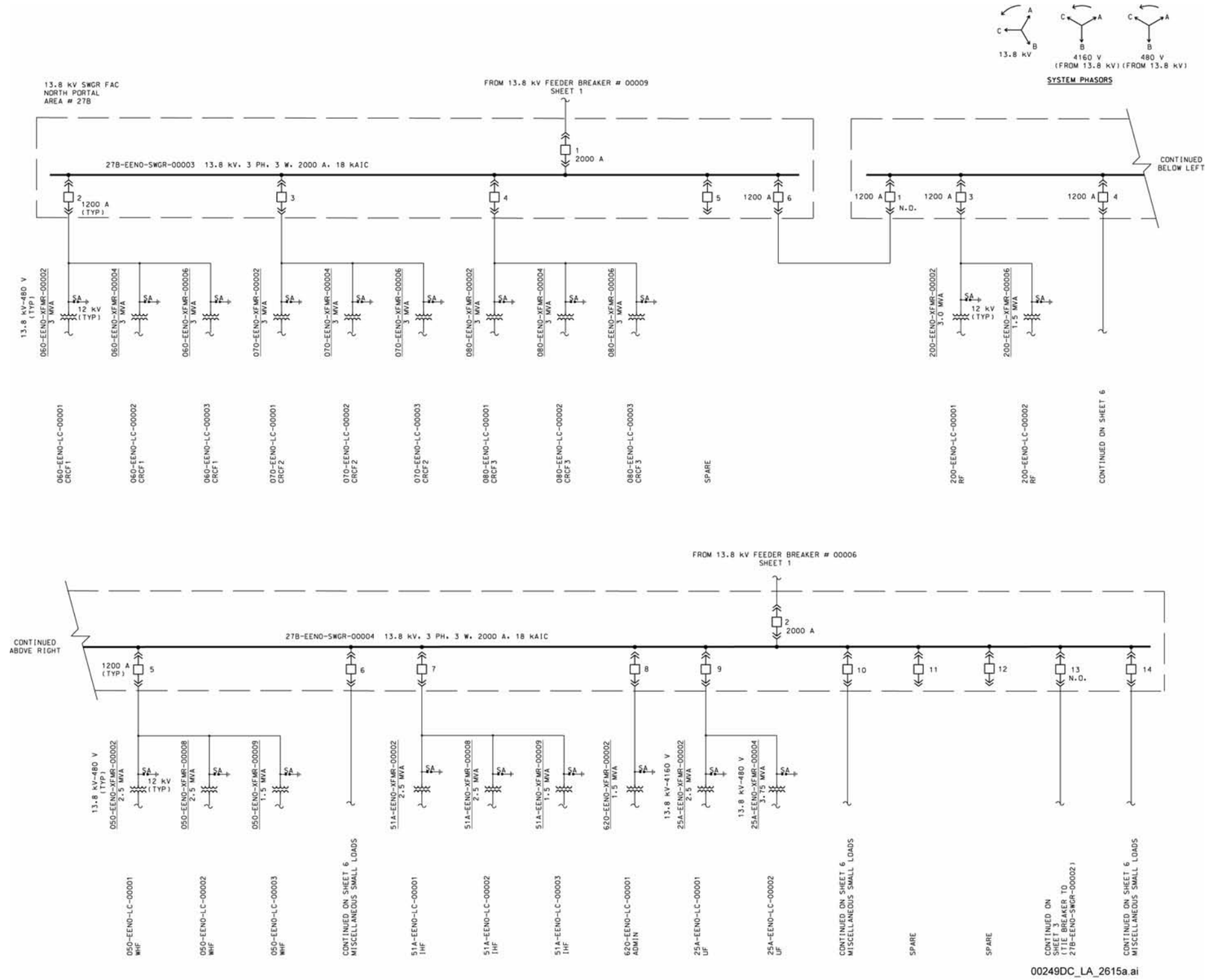

NOTE: This figure includes no SSCs that are either ITS or ITWI.
UF = Utility Facility.

Figure 1.4.1-2. 13.8 kV Normal Power Distribution Main Single Line (Sheet 4 of 6)

INTENTIONALLY LEFT BLANK

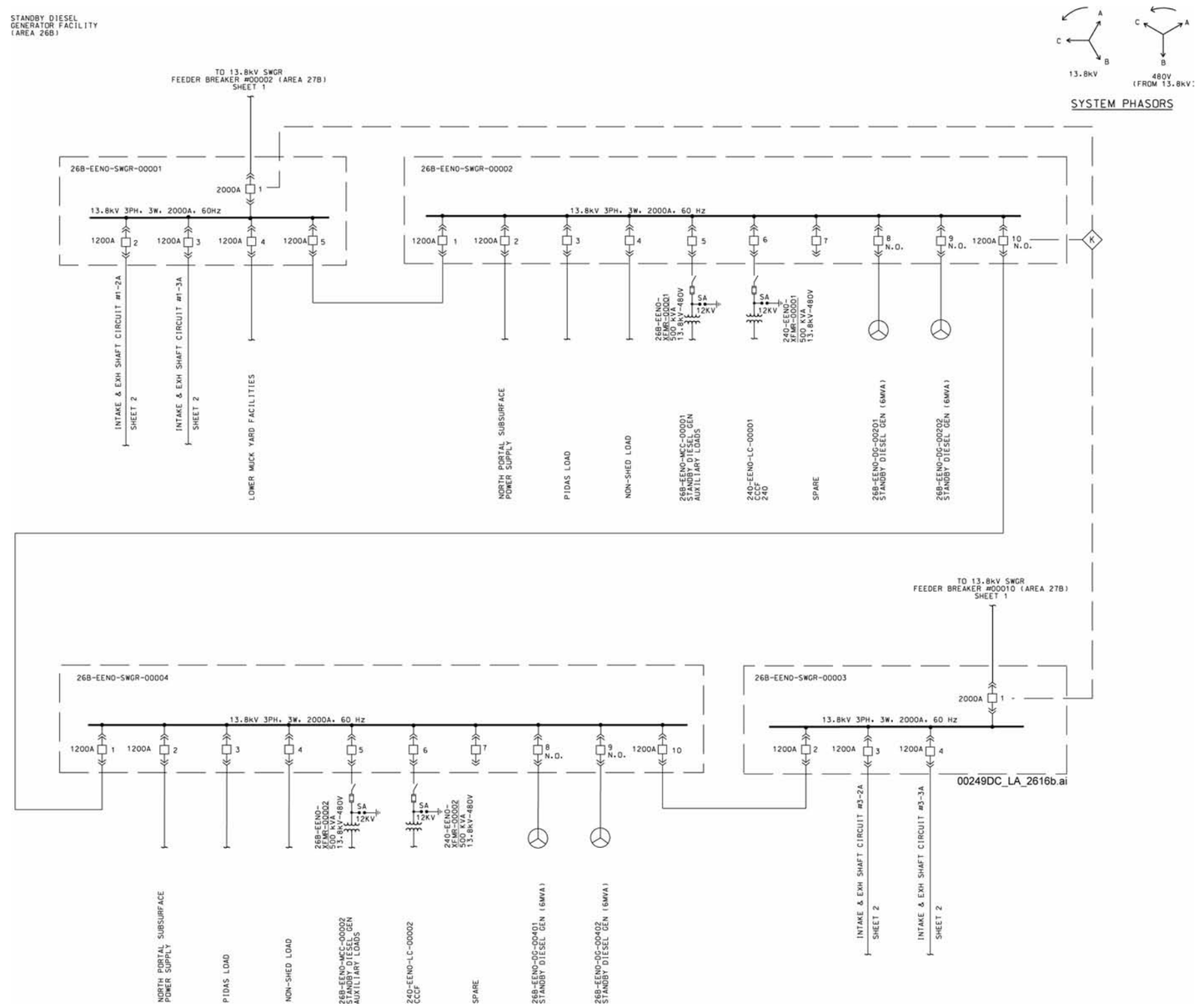

NOTE: This figure includes no SSCs that are either ITS or ITWI.
PIDAS = perimeter intrusion detection and assessment system.

Figure 1.4.1-2. 13.8 kV Normal Power Distribution Main Single Line (Sheet 5 of 6)

INTENTIONALLY LEFT BLANK

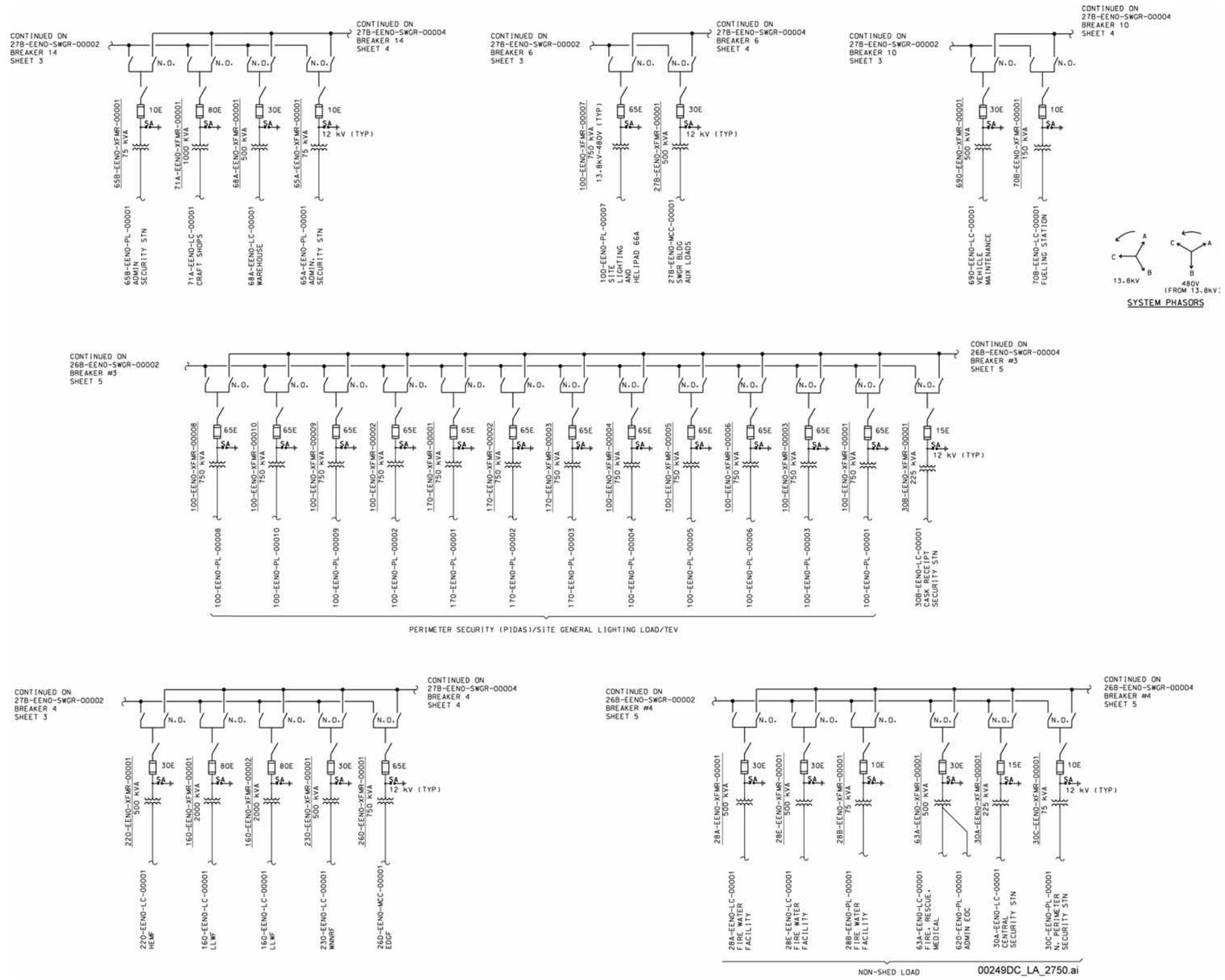

NOTE: This figure includes no SSCs that are either ITS or ITWI. EOC = Emergency Operations Center; HEMF = Heavy Equipment Maintenance Facility; LLWF = Low-Level Waste Facility; PIDAS = perimeter intrusion detection and assessment system; TEV = transport and emplacement vehicle; WNNRF = Warehouse and Non-Nuclear Receipt Facility.

Figure 1.4.1-2. 13.8 kV Normal Power Distribution Main Single Line (Sheet 6 of 6)

INTENTIONALLY LEFT BLANK

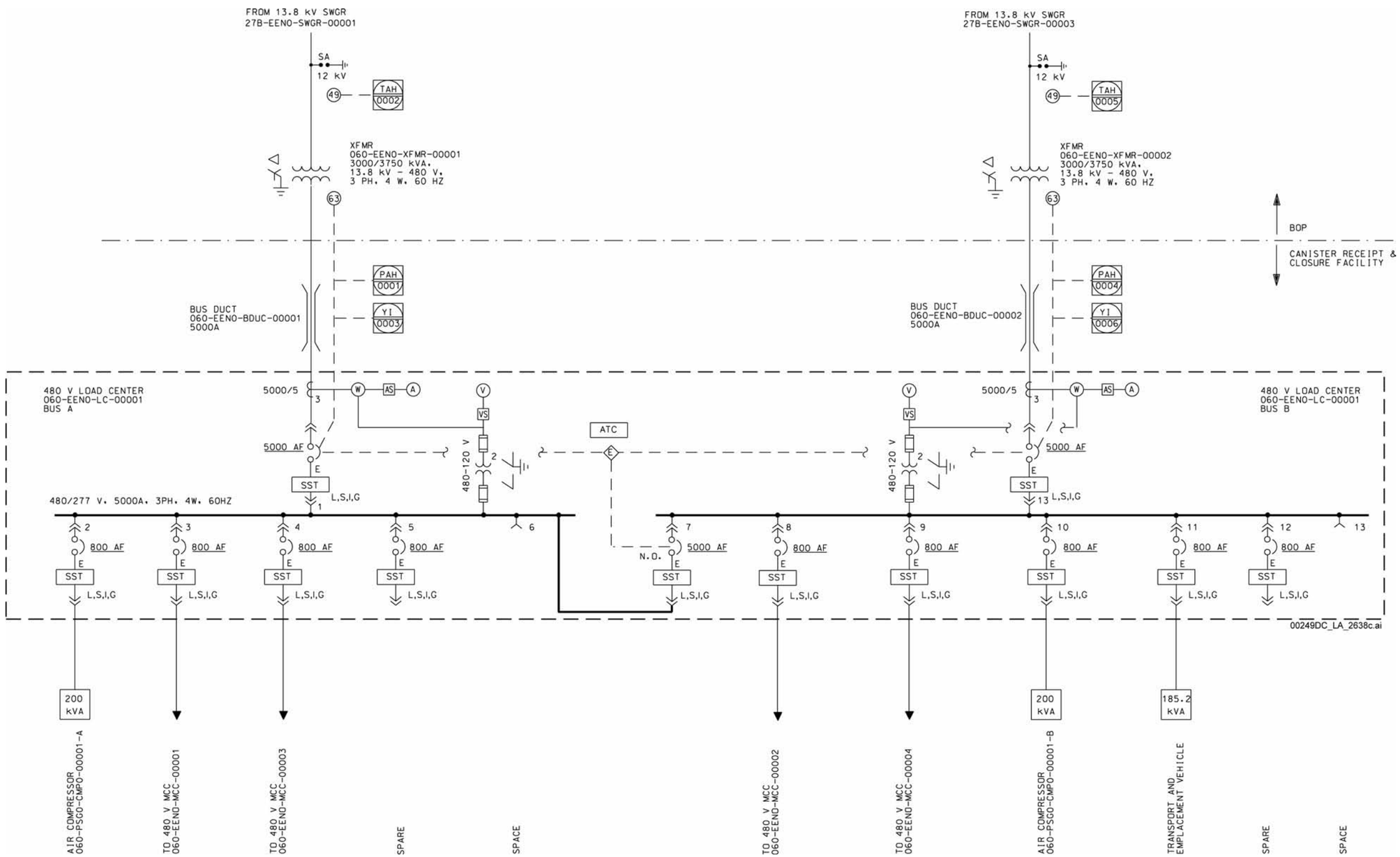

NOTE: The one tie and two incoming breakers are electrically interlocked to prevent all three from being closed at the same time. Auto transfer control provides automatic bus transfer upon failure of one source. This figure includes no SSCs that are either ITS or ITWI.
ATC = auto transfer control; BOP = balance of plant.

Figure 1.4.1-3. Canister Receipt and Closure Facility Normal AC Electrical Power (Sheet 1 of 16)

INTENTIONALLY LEFT BLANK

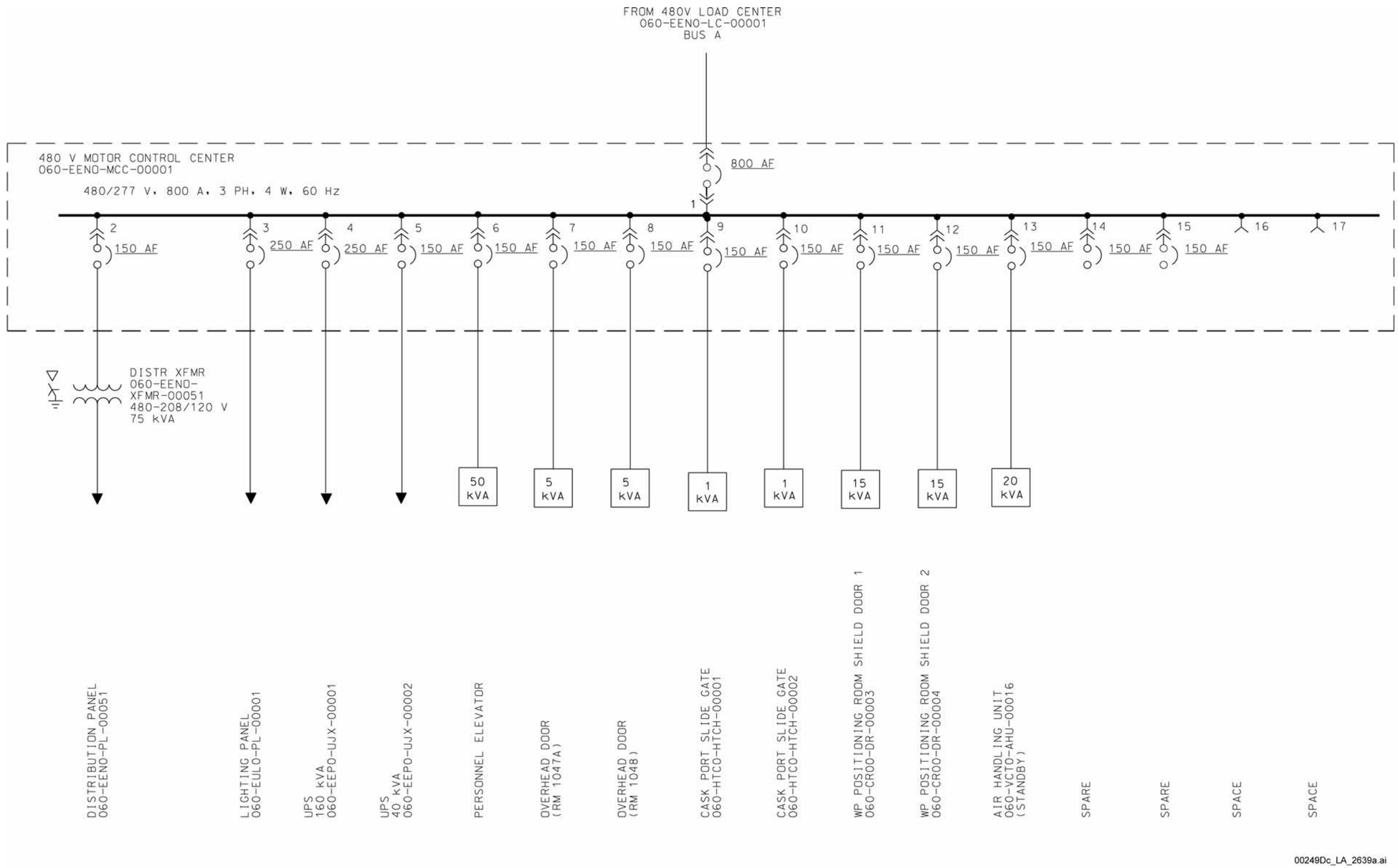

Figure 1.4.1-3. Canister Receipt and Closure Facility Normal AC Electrical Power (Sheet 2 of 16)

NOTE: This figure includes no SSCs that are either ITS or ITWI.
WP = waste package.

INTENTIONALLY LEFT BLANK

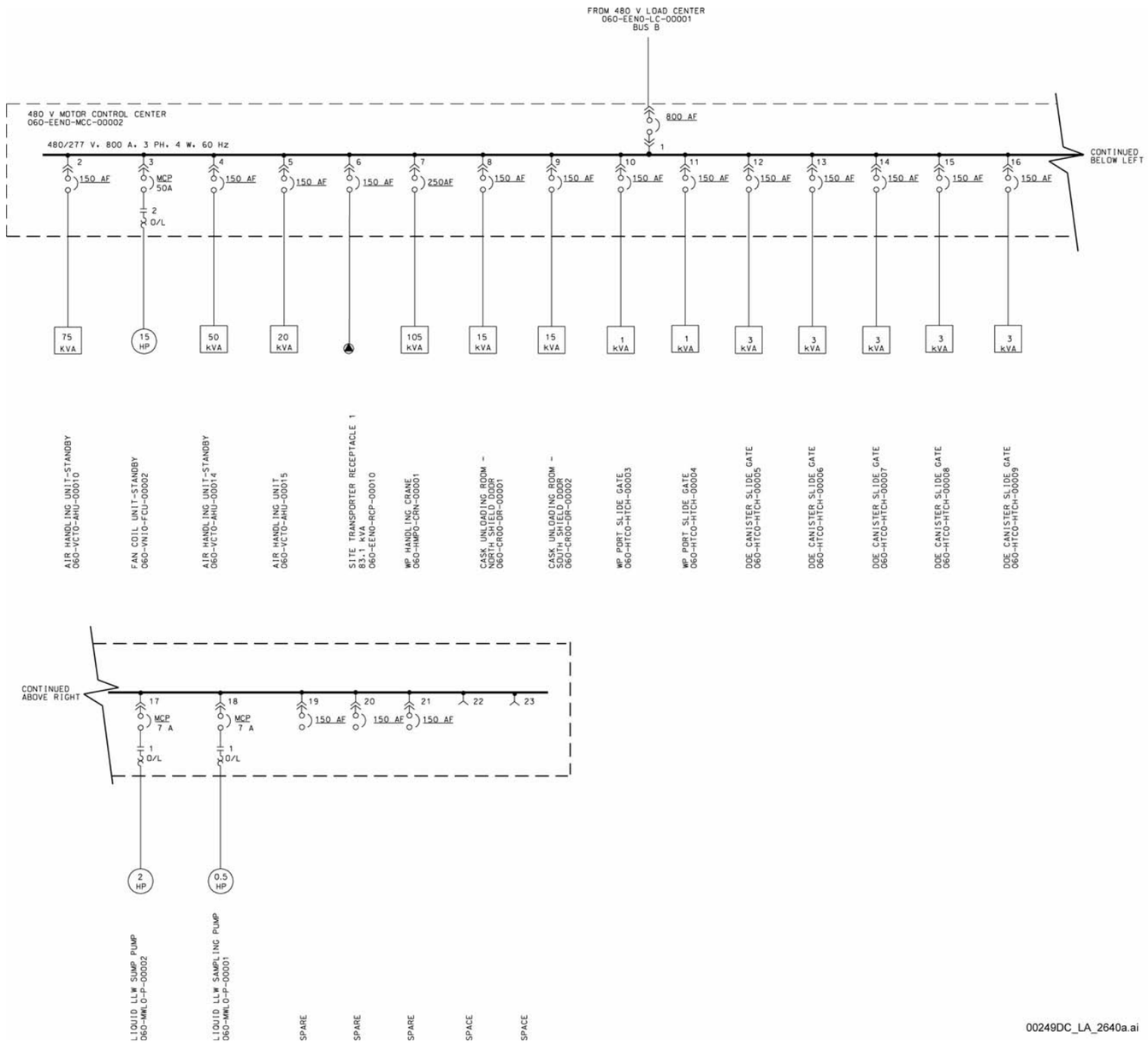

NOTE: This figure includes no SSCs that are either ITS or ITWI.
DOE = U.S. Department of Energy; LLW = low-level radioactive waste;
WP = waste package.

Figure 1.4.1-3. Canister Receipt and Closure Facility Normal AC Electrical Power (Sheet 3 of 16)

INTENTIONALLY LEFT BLANK

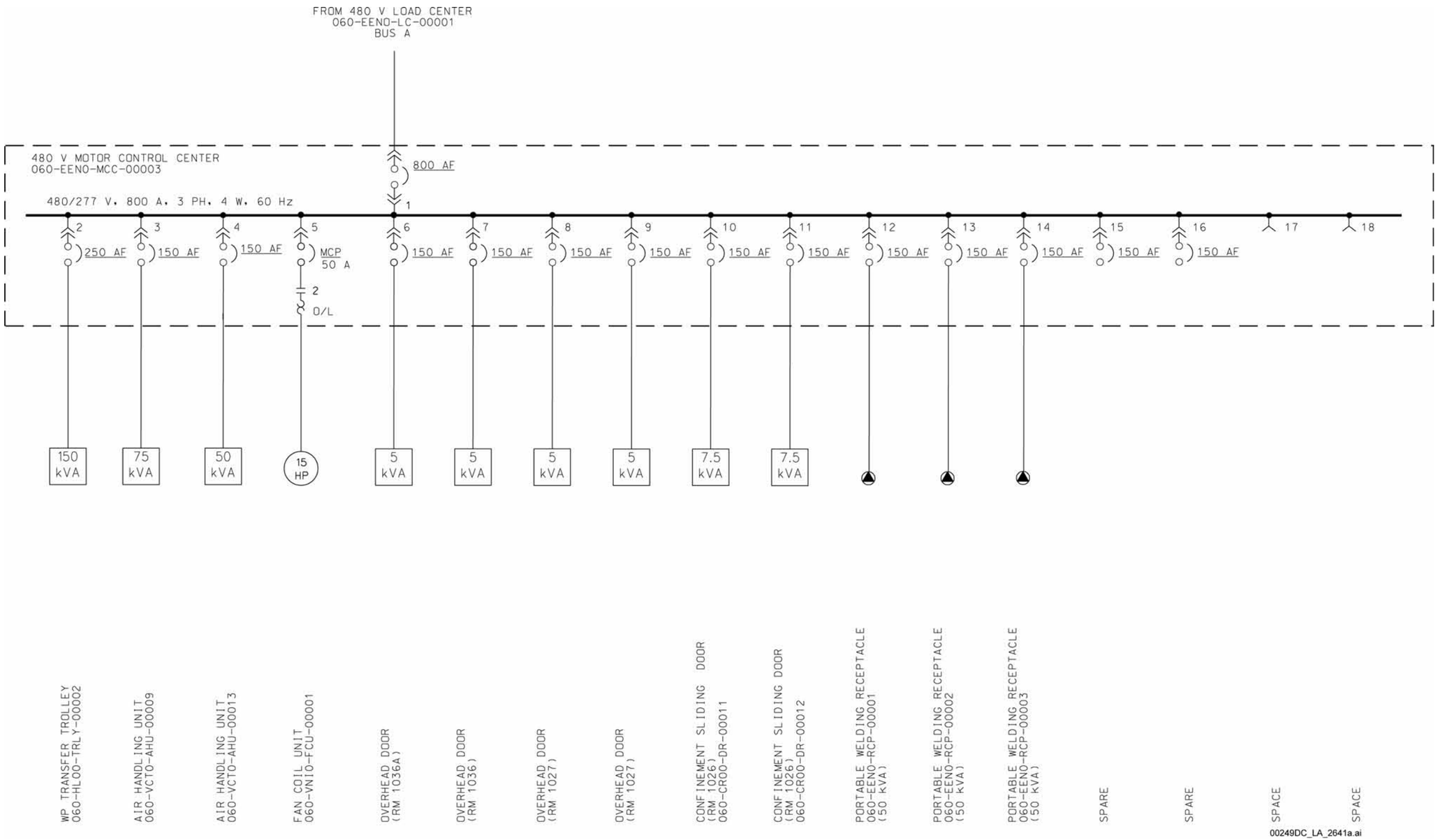

Figure 1.4.1-3. Canister Receipt and Closure Facility Normal AC Electrical Power (Sheet 4 of 16)

NOTE: This figure includes no SSCs that are either ITS or ITWI.
WP = waste package.

INTENTIONALLY LEFT BLANK

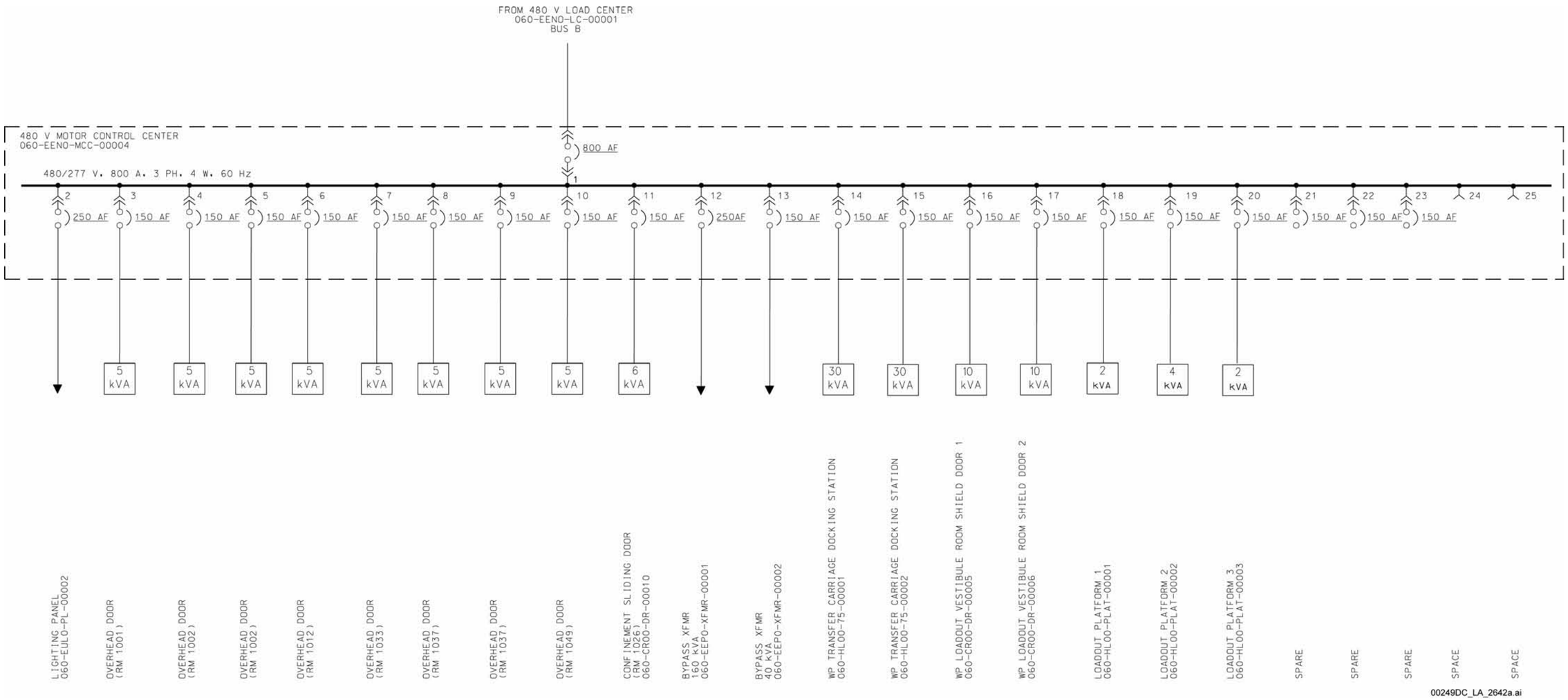

Figure 1.4.1-3. Canister Receipt and Closure Facility Normal AC Electrical Power (Sheet 5 of 16)

NOTE: This figure includes no SSCs that are either ITS or ITWI.
WP = waste package.

INTENTIONALLY LEFT BLANK

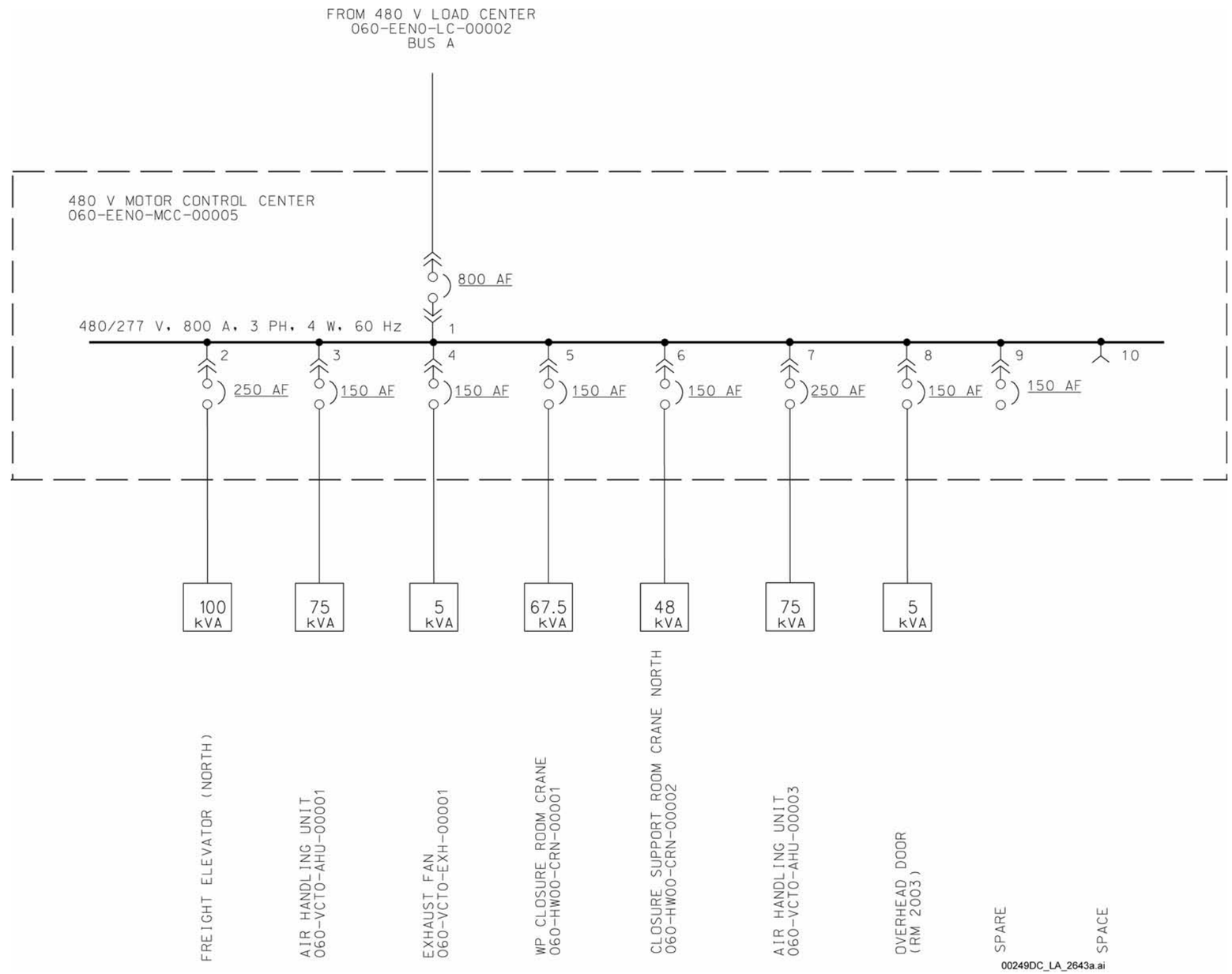

Figure 1.4.1-3. Canister Receipt and Closure Facility Normal AC Electrical Power (Sheet 6 of 16)

NOTE: This figure includes no SSCs that are either ITS or ITWI.
WP = waste package.

INTENTIONALLY LEFT BLANK

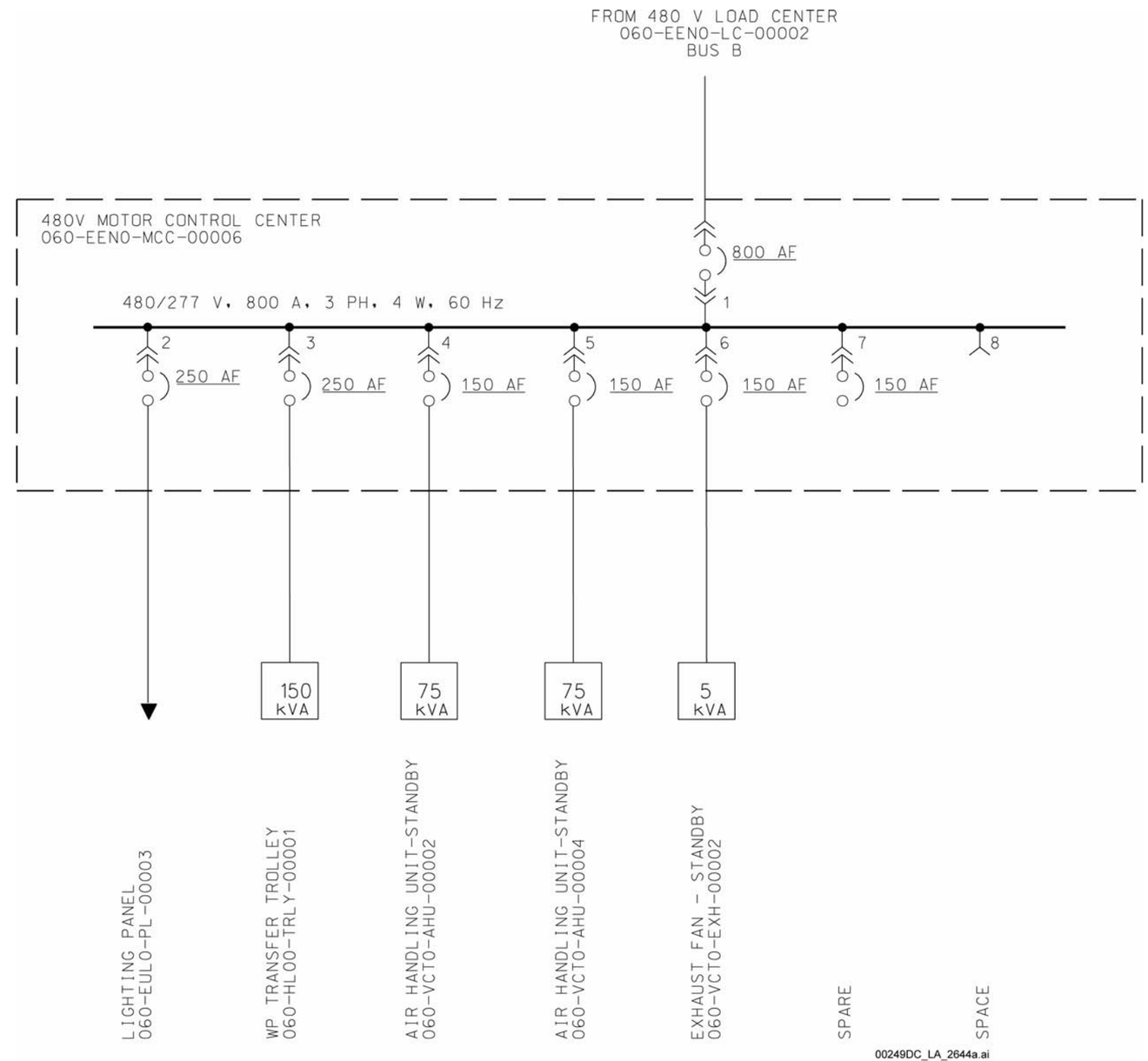

Figure 1.4.1-3. Canister Receipt and Closure Facility Normal AC Electrical Power (Sheet 7 of 16)

NOTE: This figure includes no SSCs that are either ITS or ITWI.
WP = waste package.

INTENTIONALLY LEFT BLANK

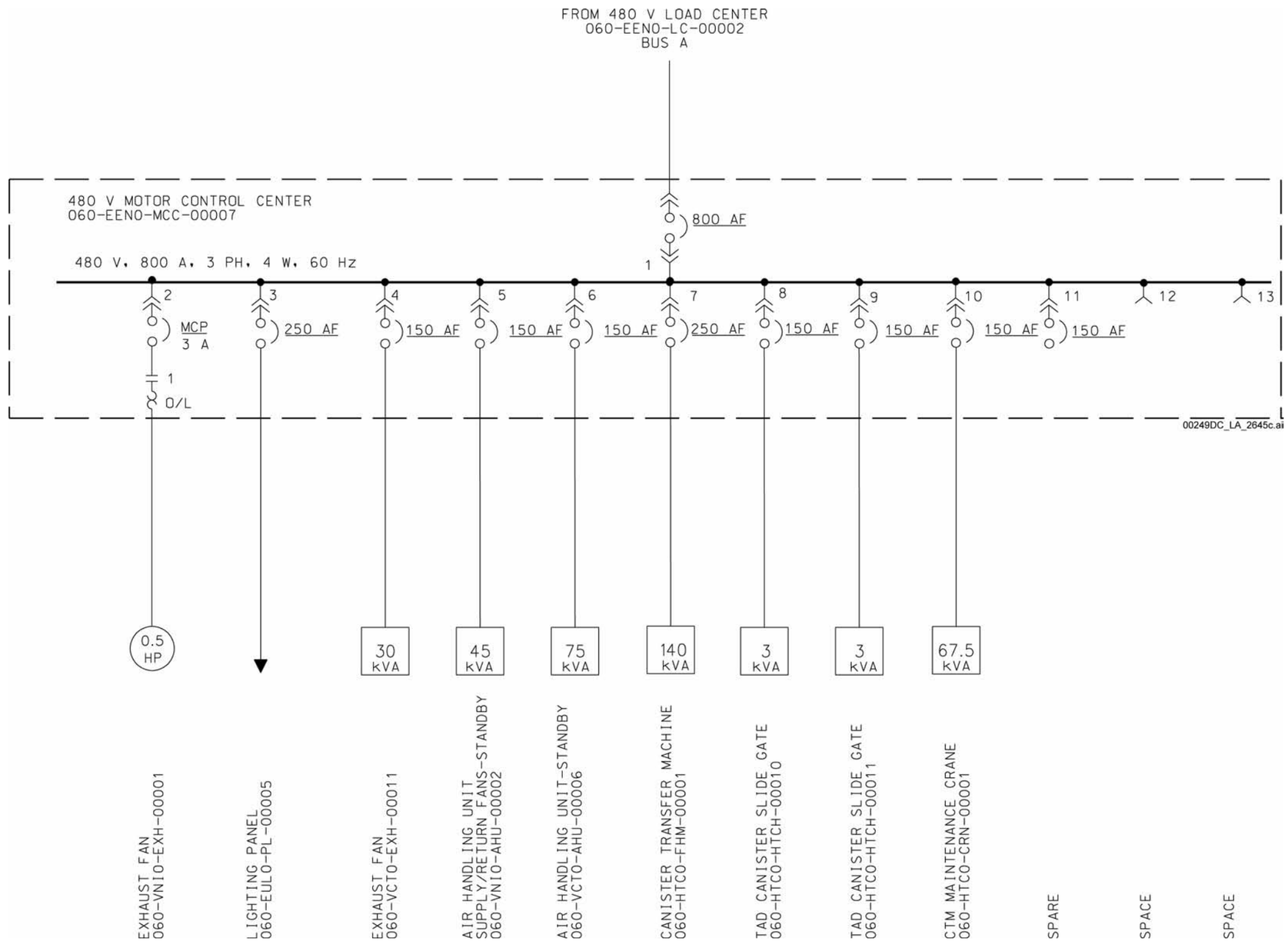

NOTE: This figure includes no SSCs that are either ITS or ITWI.
CTM = canister transfer machine; TAD = transportation, aging, and disposal.

Figure 1.4.1-3. Canister Receipt and Closure Facility Normal AC Electrical Power (Sheet 8 of 16)

INTENTIONALLY LEFT BLANK

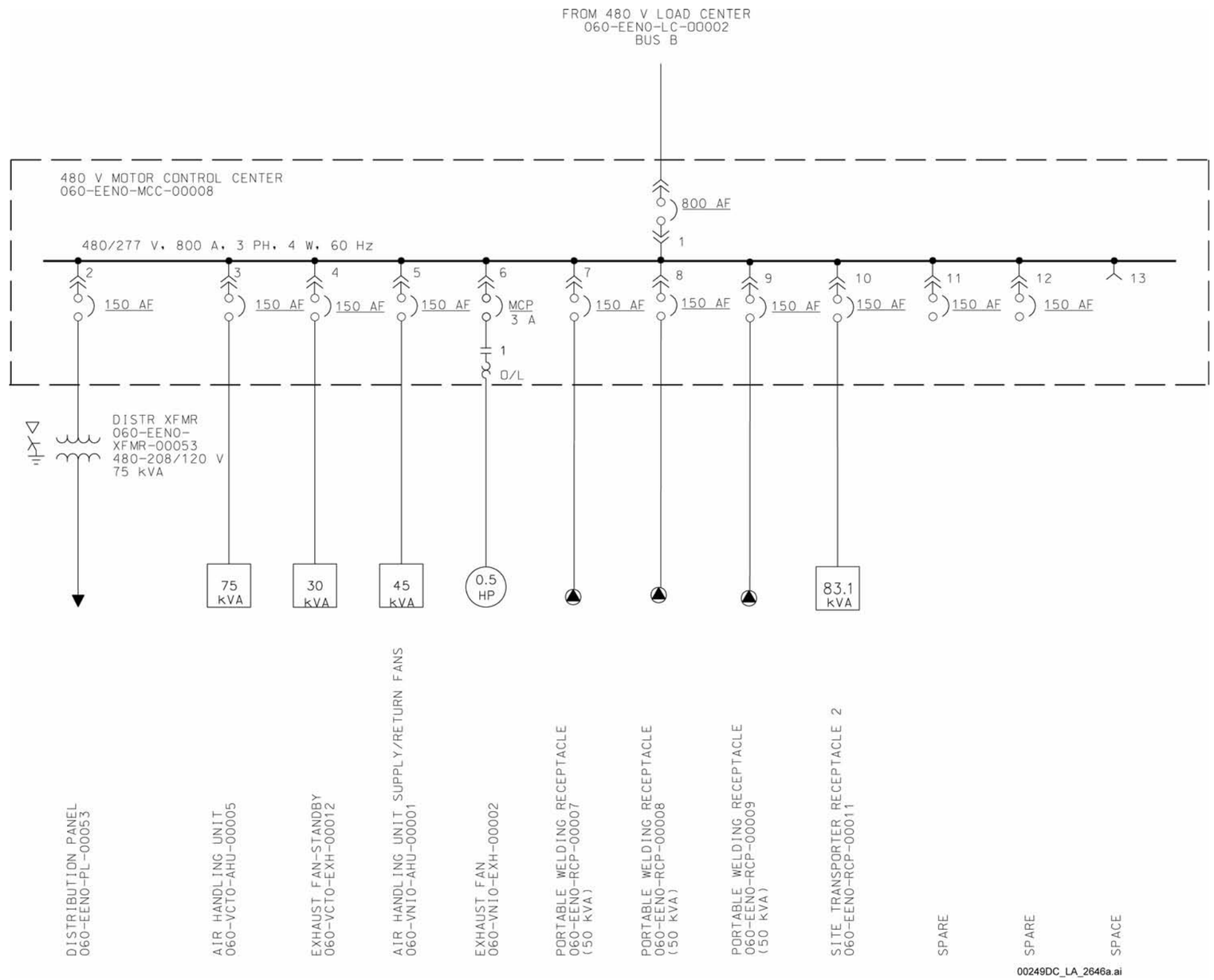

Figure 1.4.1-3. Canister Receipt and Closure Facility Normal AC Electrical Power (Sheet 9 of 16)

NOTE: This figure includes no SSCs that are either ITS or ITWI.

INTENTIONALLY LEFT BLANK

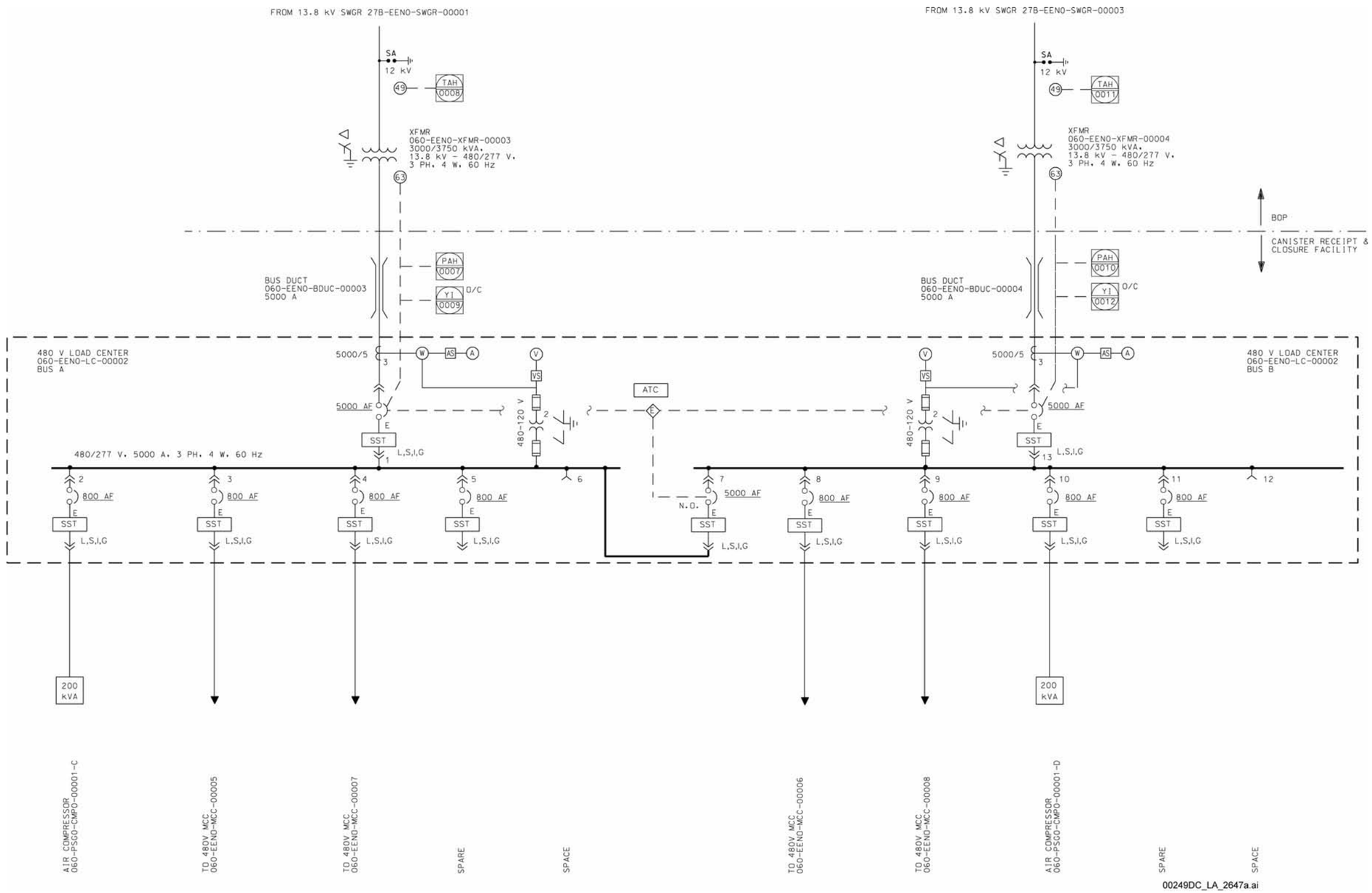

NOTE: The one tie and two incoming breakers are electrically interlocked to prevent all three from being closed at the same time. Auto transfer control provides automatic bus transfer upon failure of one source. This figure includes no SSCs that are either ITS or ITWI.
ATC = auto transfer control; BOP = balance of plant.

Figure 1.4.1-3. Canister Receipt and Closure Facility Normal AC Electrical Power (Sheet 10 of 16)

INTENTIONALLY LEFT BLANK

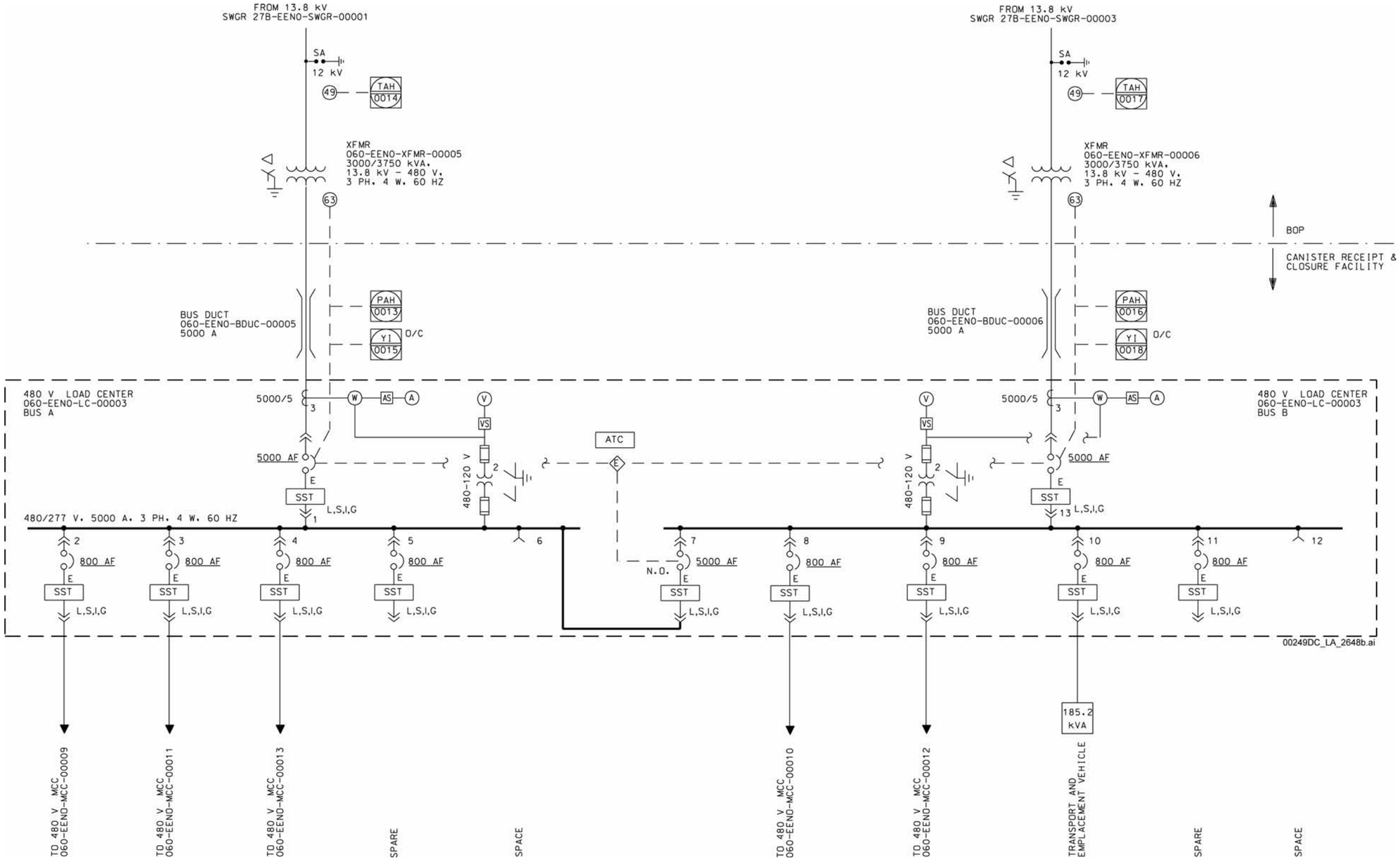

NOTE: The one tie and two incoming breakers are electrically interlocked to prevent all three from being closed at the same time. Auto transfer control provides automatic bus transfer upon failure of one source. This figure includes no SSCs that are either ITS or ITWI.
ATC = auto transfer control; BOP = balance of plant.

Figure 1.4.1-3. Canister Receipt and Closure Facility Normal AC Electrical Power (Sheet 11 of 16)

INTENTIONALLY LEFT BLANK

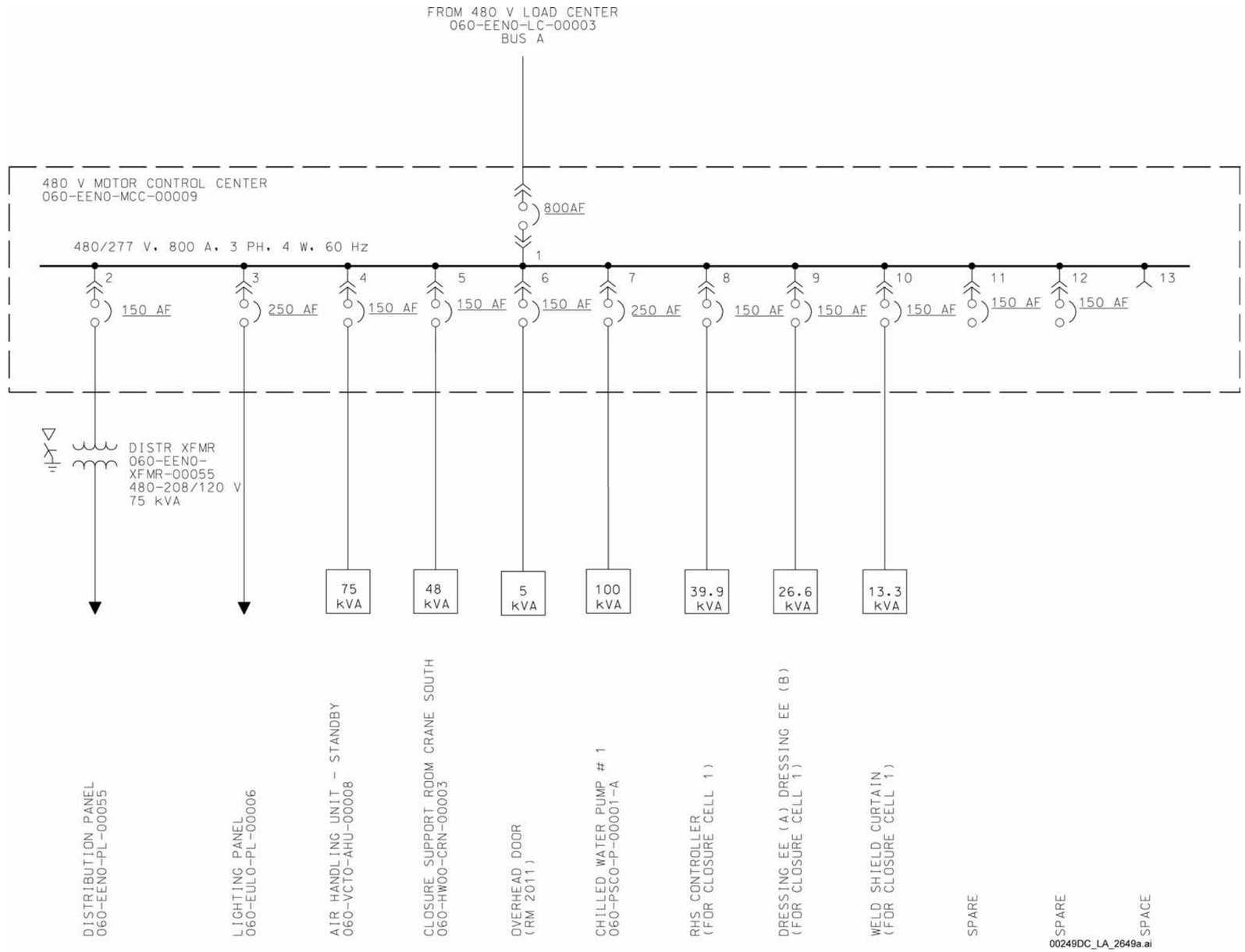

Figure 1.4.1-3. Canister Receipt and Closure Facility Normal AC Electrical Power (Sheet 12 of 16)

NOTE: This figure includes no SSCs that are either ITS or ITWI.
RHS = remote handling system.

INTENTIONALLY LEFT BLANK

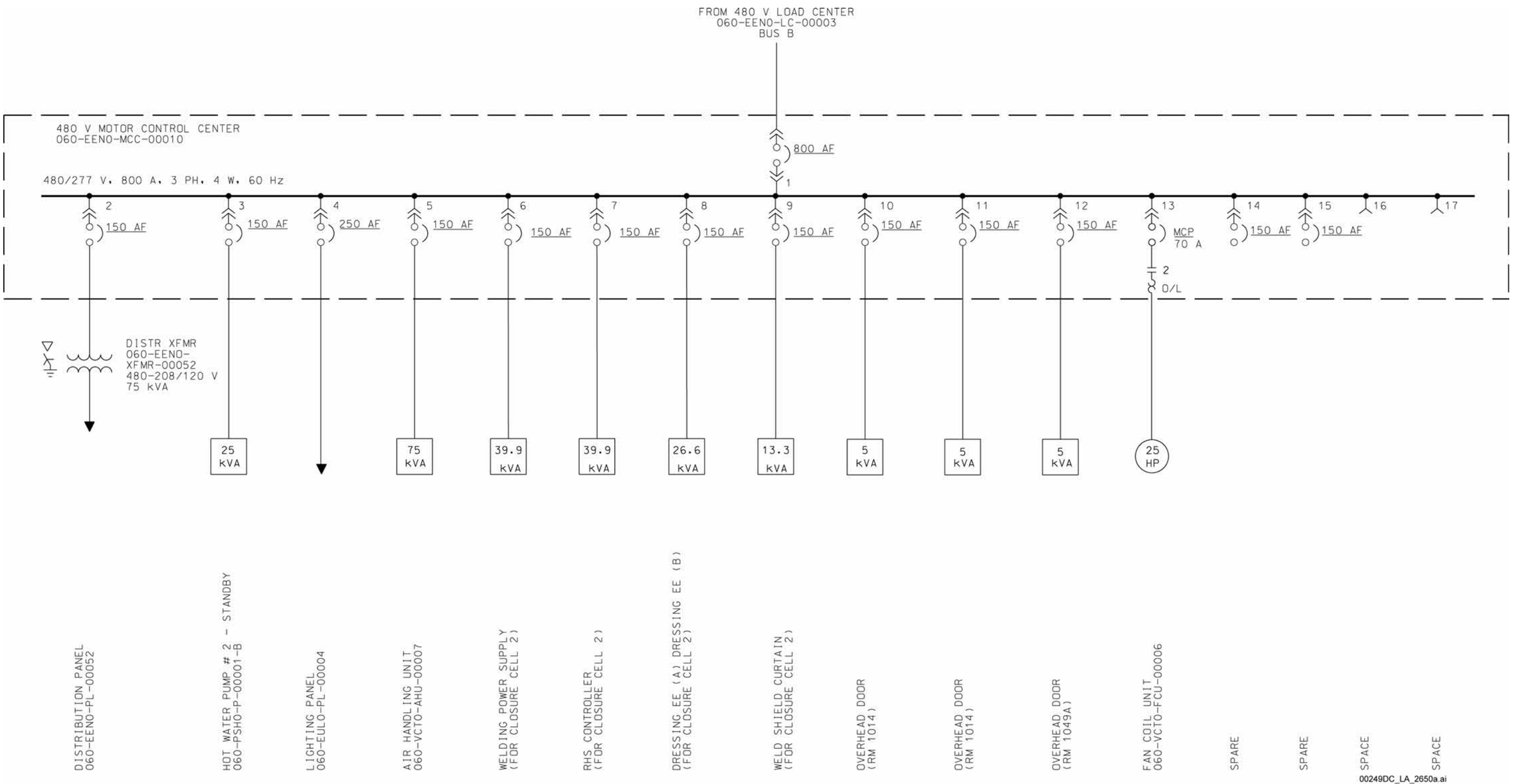

Figure 1.4.1-3. Canister Receipt and Closure Facility Normal AC Electrical Power (Sheet 13 of 16)

NOTE: This figure includes no SSCs that are either ITS or ITWI.
RHS = remote handling system.

INTENTIONALLY LEFT BLANK

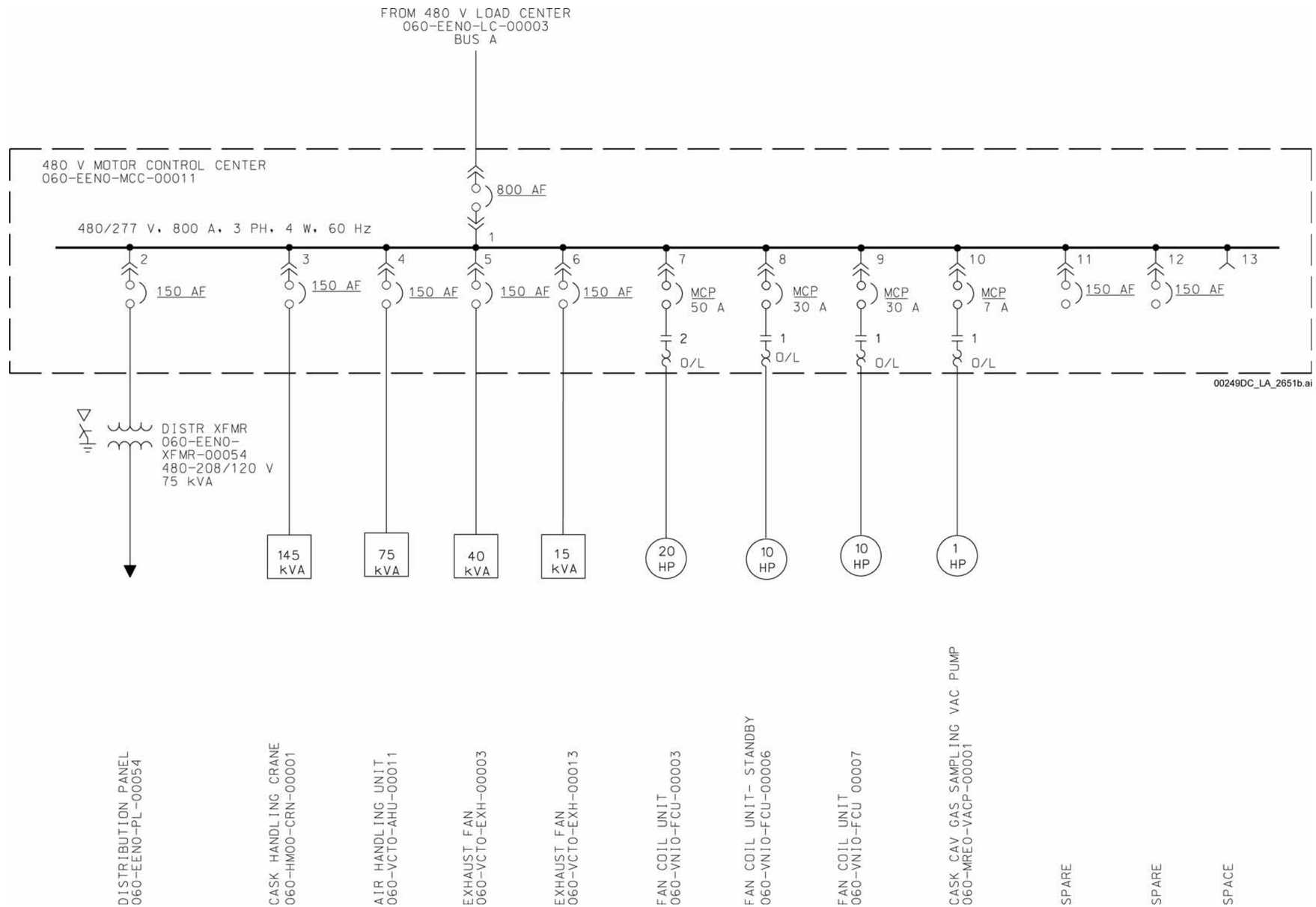

Figure 1.4.1-3. Canister Receipt and Closure Facility Normal AC Electrical Power (Sheet 14 of 16)

NOTE: This figure includes no SSCs that are either ITS or ITWI.

INTENTIONALLY LEFT BLANK

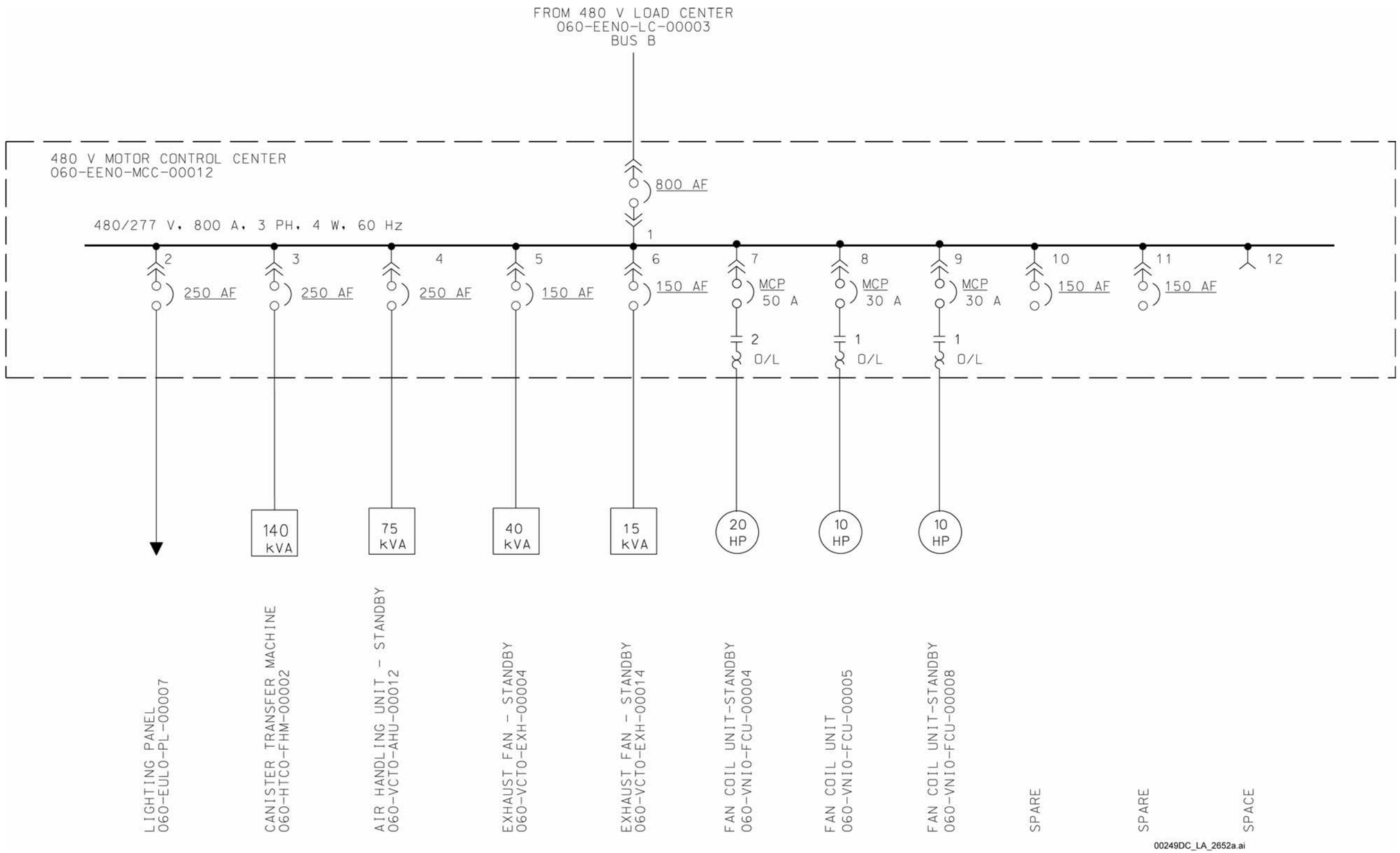

Figure 1.4.1-3. Canister Receipt and Closure Facility Normal AC Electrical Power (Sheet 15 of 16)

NOTE: This figure includes no SSCs that are either ITS or ITWI.

INTENTIONALLY LEFT BLANK

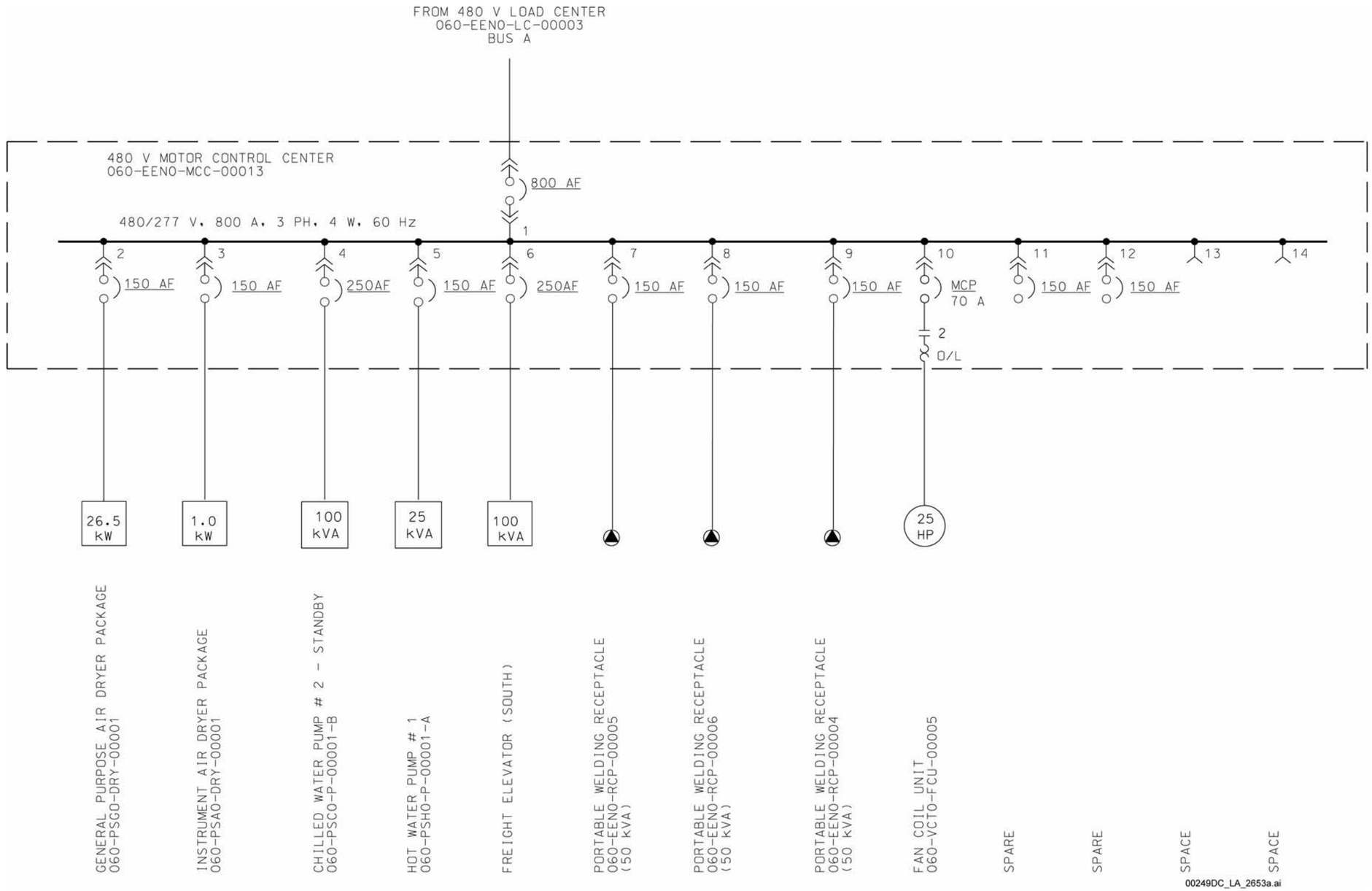

Figure 1.4.1-3. Canister Receipt and Closure Facility Normal AC Electrical Power (Sheet 16 of 16)

NOTE: This figure includes no SSCs that are either ITS or ITWI.

INTENTIONALLY LEFT BLANK

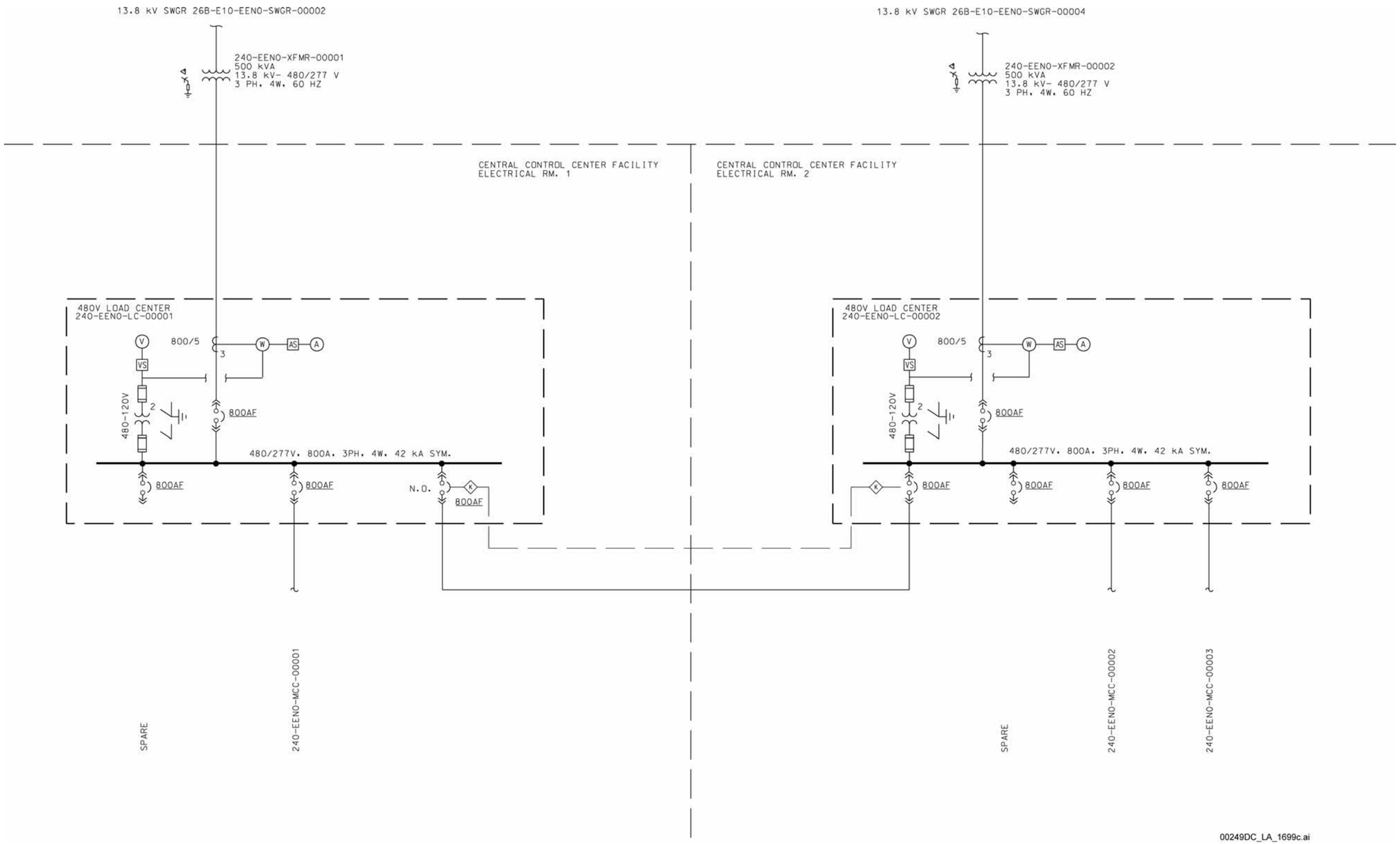

NOTE: The two load center tie breakers are mechanically interlocked to prevent accidental closure at the same time. This figure includes no SSCs that are either ITS or ITWI.

Figure 1.4.1-4. Central Control Center Facility Normal AC Electrical Power (Sheet 1 of 4)

INTENTIONALLY LEFT BLANK

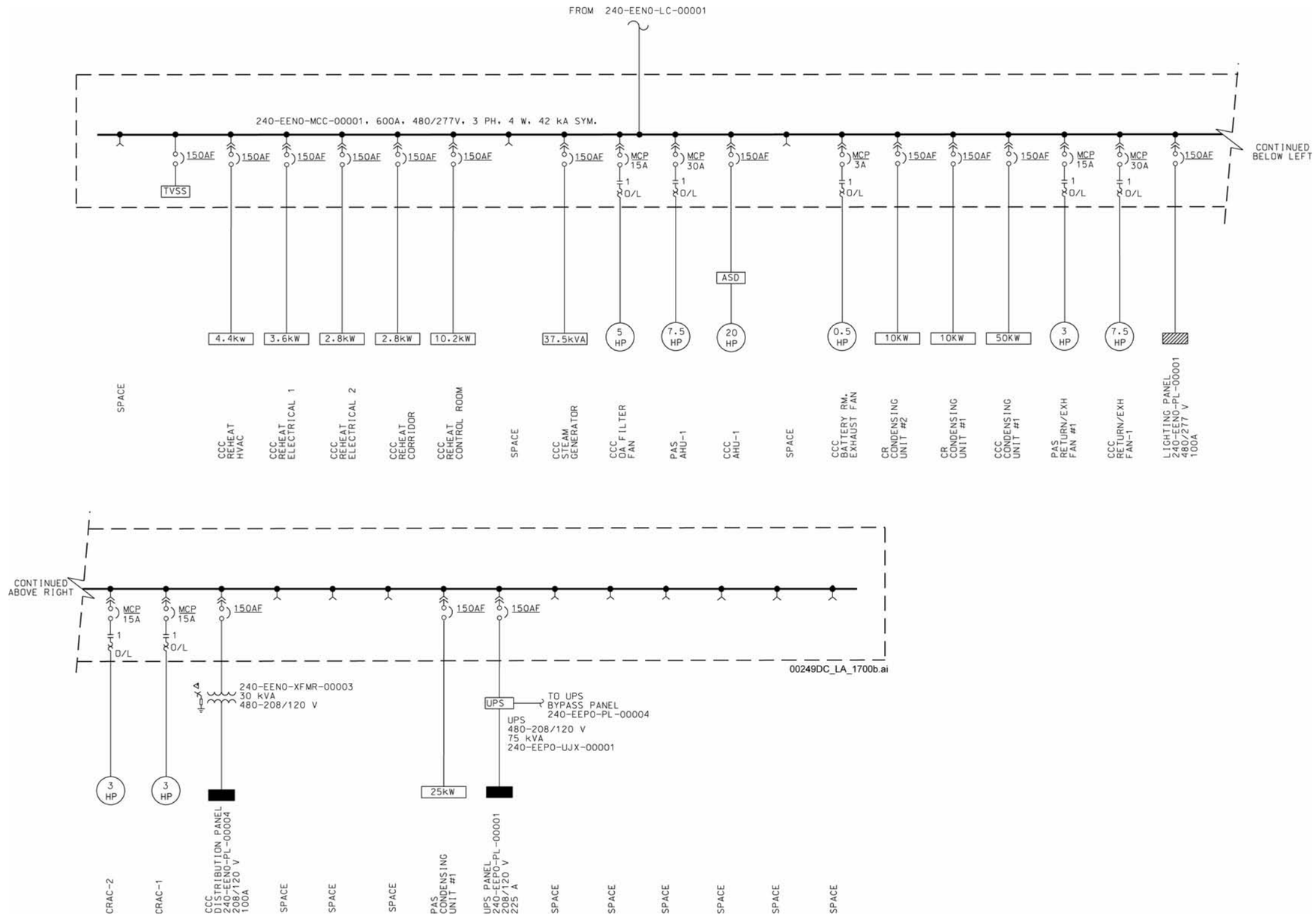

NOTE: This figure includes no SSCs that are either ITS or ITWI.
CCC = Central Control Center; CR = control room; CRAC = control room air-conditioning; OA = outside air; PAS = primary alarm system.

Figure 1.4.1-4. Central Control Center Facility Normal AC Electrical Power (Sheet 2 of 4)

INTENTIONALLY LEFT BLANK

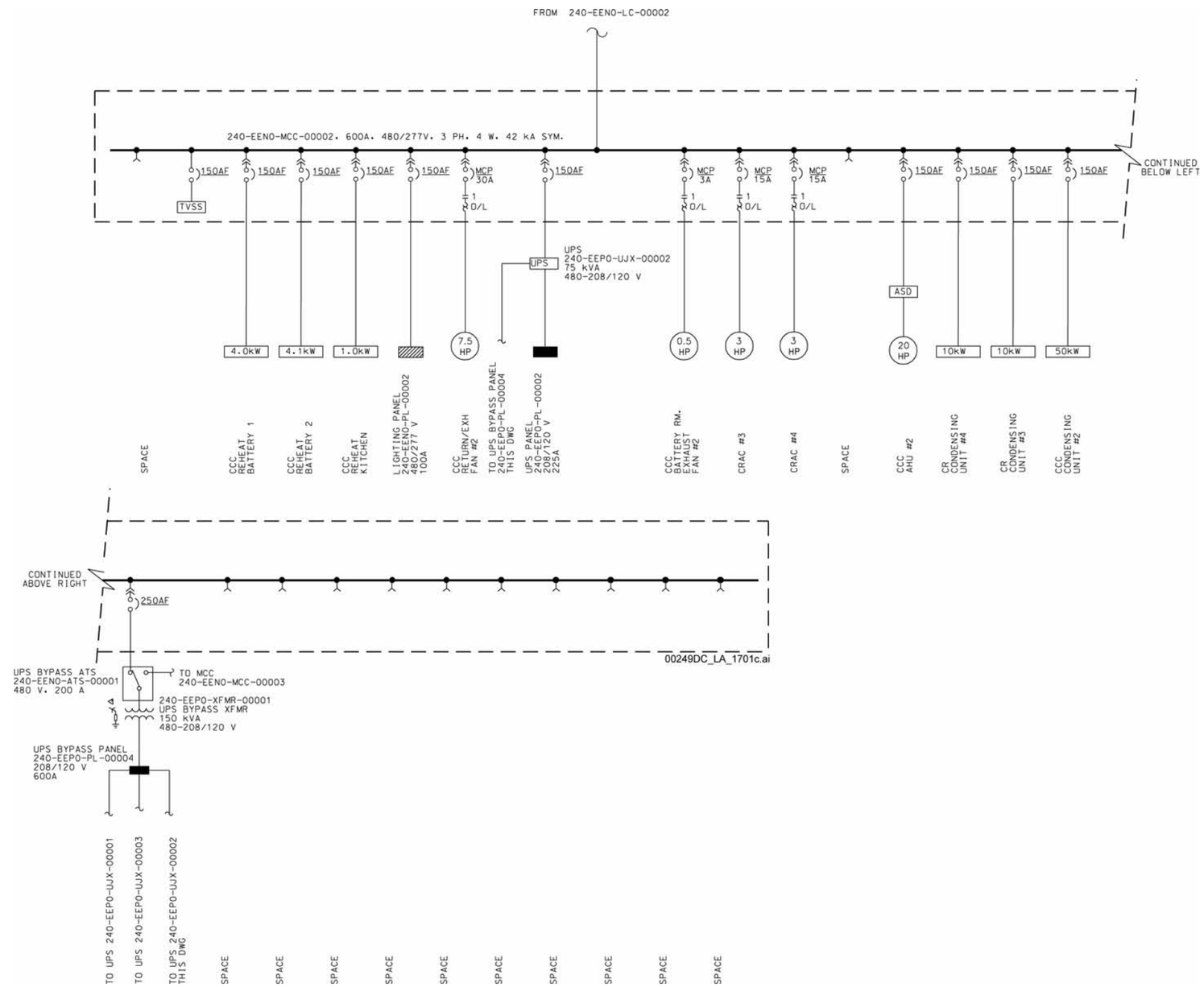

NOTE: This figure includes no SSCs that are either ITS or ITWI.
AHU = air handling unit; CCC = Central Control Center; CR = control room;
CRAC = control room air-conditioning, UPS = uninterruptible power supply.

Figure 1.4.1-4. Central Control Center Facility Normal AC Electrical Power (Sheet 3 of 4)

INTENTIONALLY LEFT BLANK

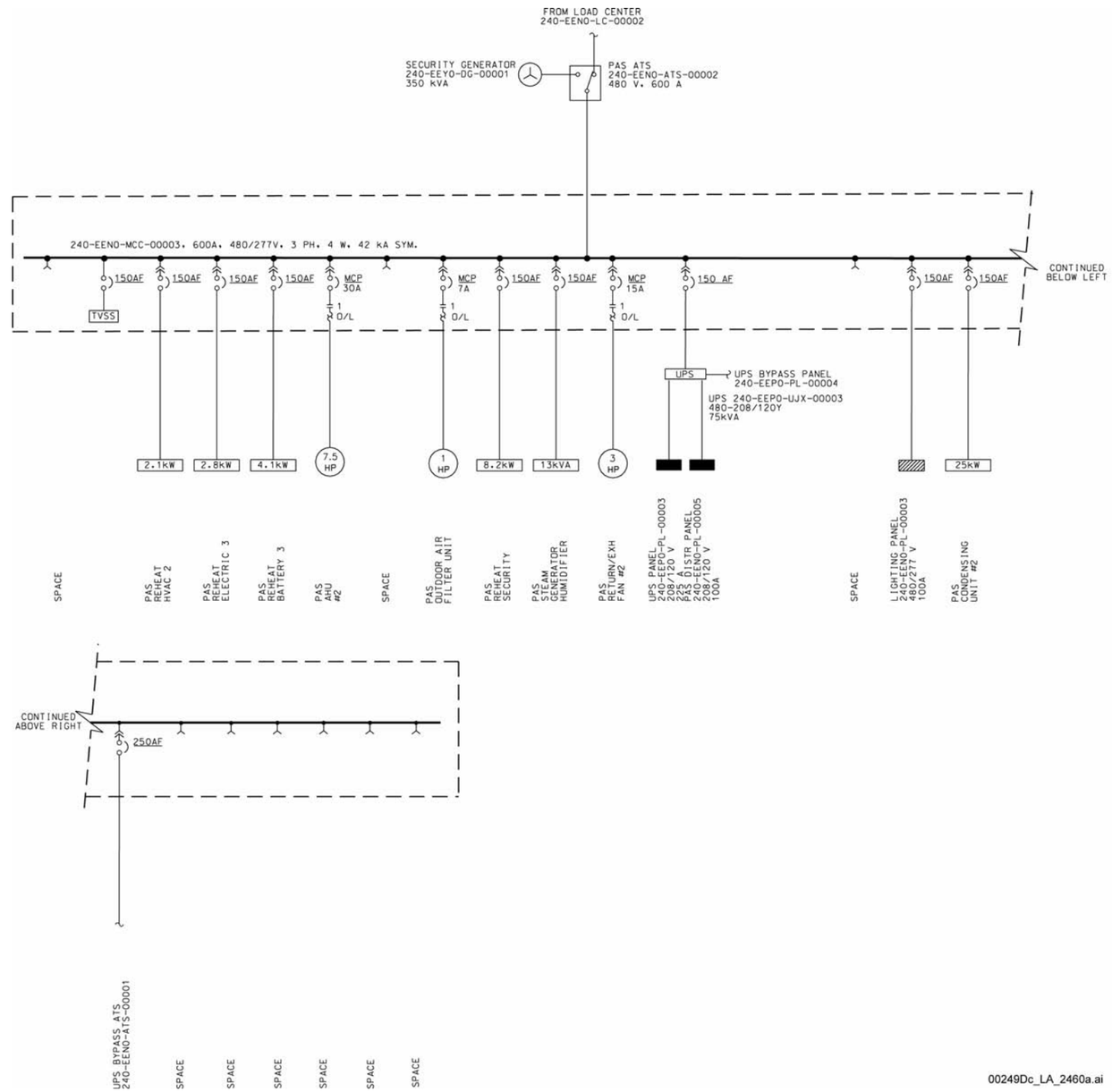

NOTE: This figure includes no SSCs that are either ITS or ITWI.
AHU = air handling unit; ATS = auto transfer switch; PAS = primary alarm station.

Figure 1.4.1-4. Central Control Center Facility Normal AC Electrical Power (Sheet 4 of 4)

INTENTIONALLY LEFT BLANK

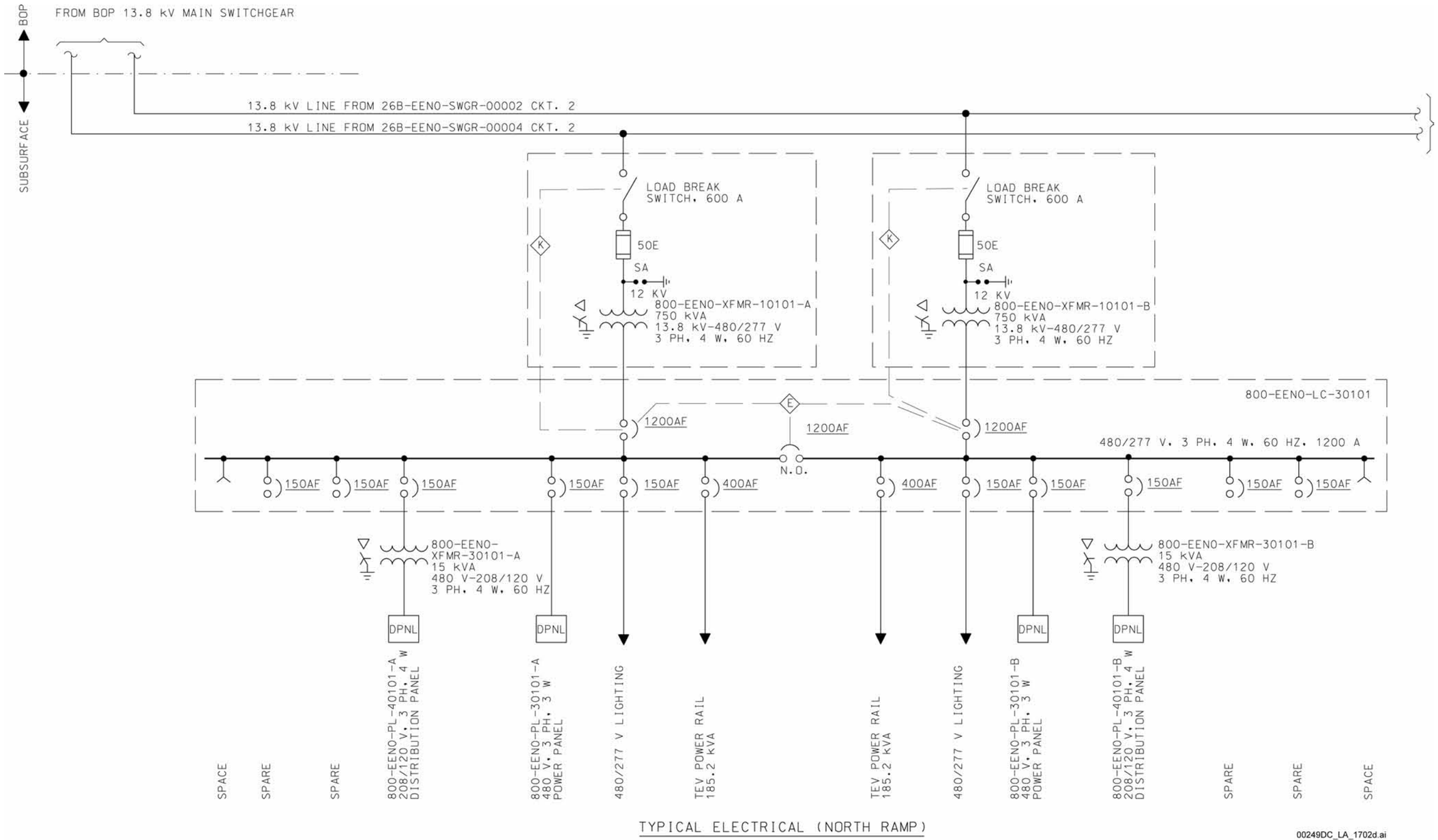

Figure 1.4.1-5. Subsurface North Ramp and Panel Mains Normal AC Main Single Line Diagram (Typical)

NOTE: This figure includes no SSCs that are either ITS or ITWI.
BOP = balance of plant.

INTENTIONALLY LEFT BLANK

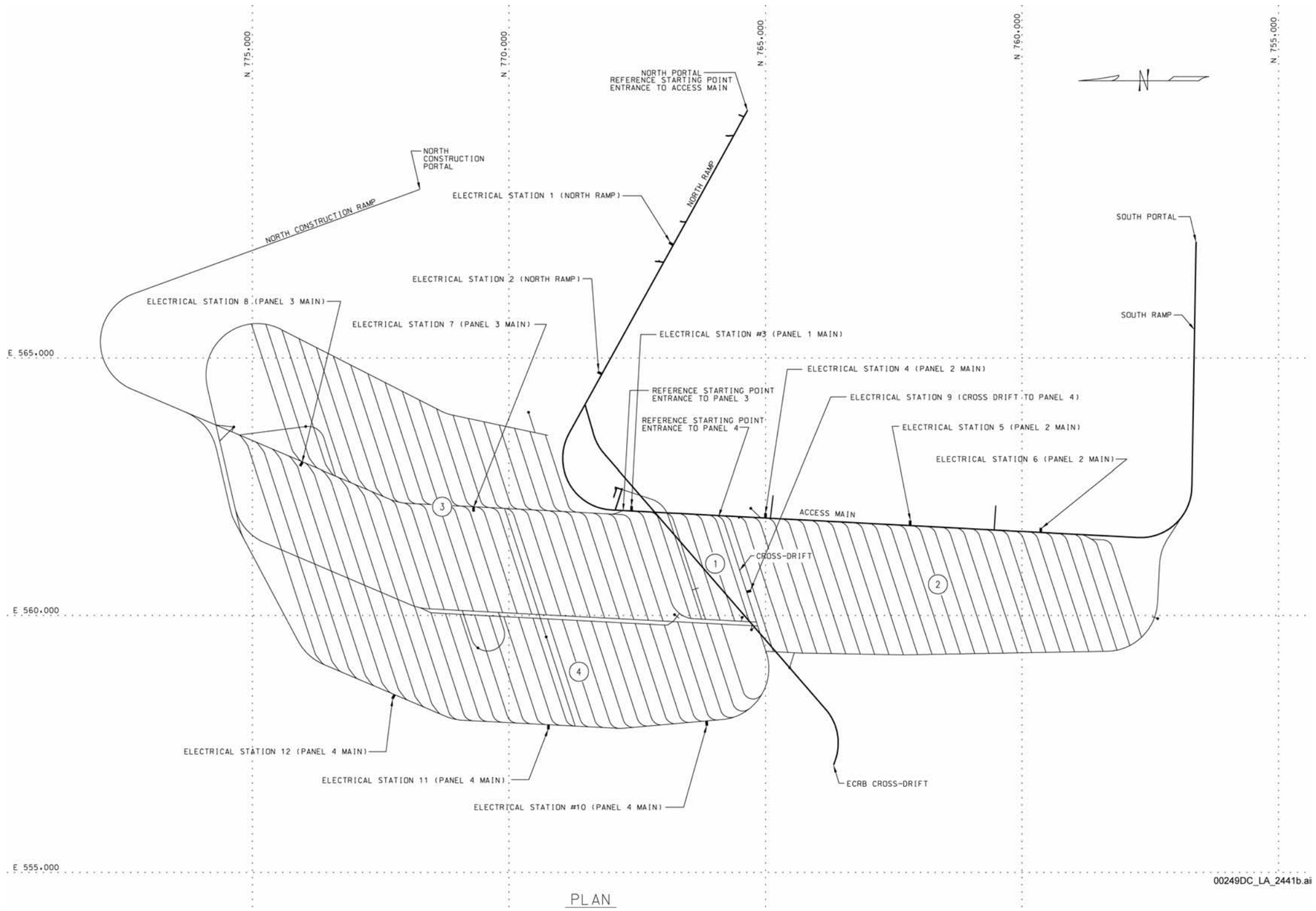

Figure 1.4.1-6. Subsurface Facility Access Main Electrical Station Location

INTENTIONALLY LEFT BLANK

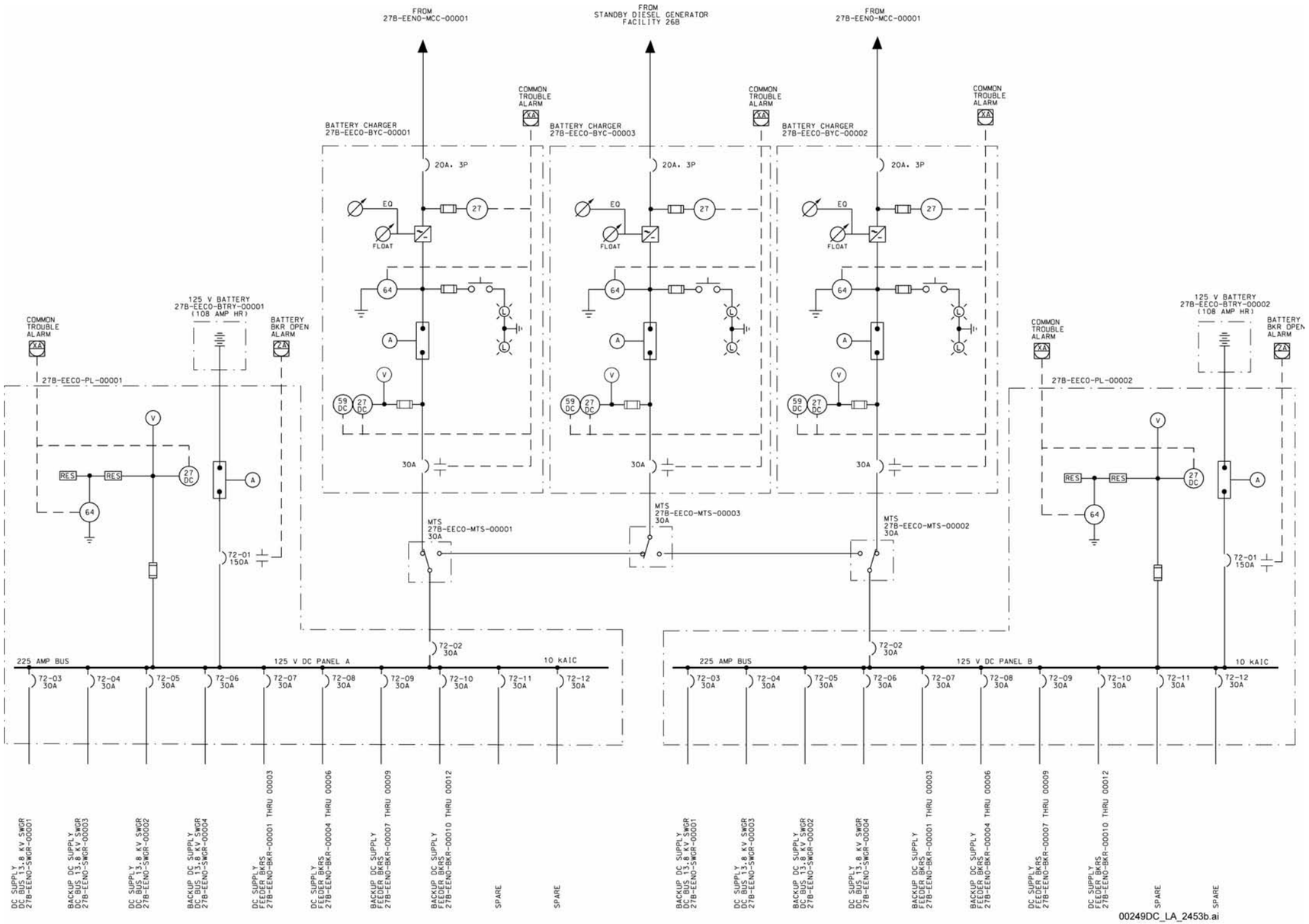

NOTE: Relays numbered “27” indicate under voltage relays, relays numbered “59” indicate over voltage relays, and relays numbered “64” indicate ground fault relays. This figure includes no SSCs that are either ITS or ITWI.
EQ = equalize.

Figure 1.4.1-7. 13.8 kV Main Switchgear Facility Single Line Diagram Normal 125 V DC

INTENTIONALLY LEFT BLANK

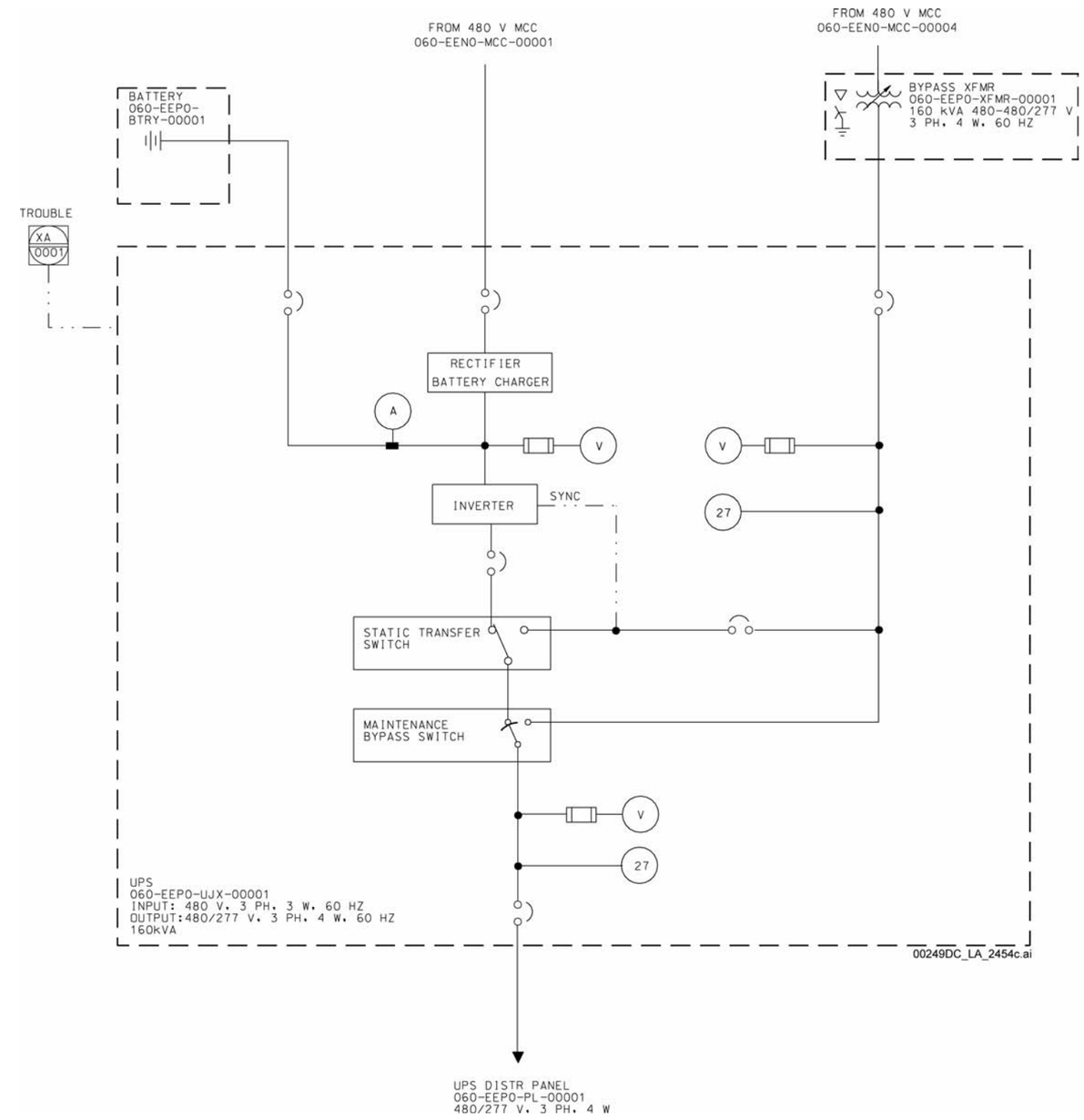

Figure 1.4.1-8. Canister Receipt and Closure Facility 480/277 V Normal Uninterruptible Power Supply Inverter

NOTE: This figure includes no SSCs that are either ITS or ITWI.

INTENTIONALLY LEFT BLANK

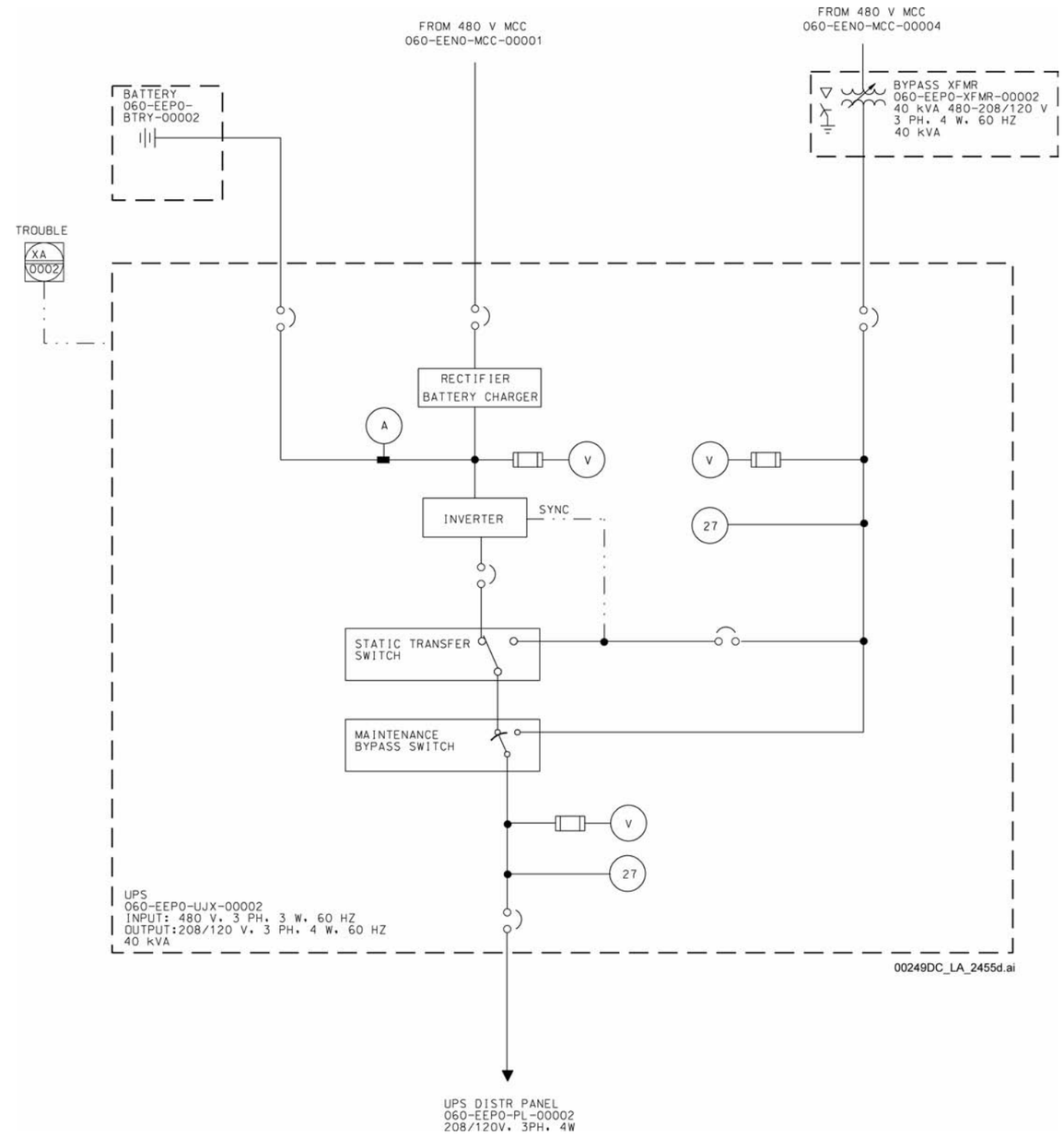

Figure 1.4.1-9. Canister Receipt and Closure Facility 208/120 V Normal Uninterruptible Power Supply Inverter

NOTE: This figure includes no SSCs that are either ITS or ITWI.

INTENTIONALLY LEFT BLANK

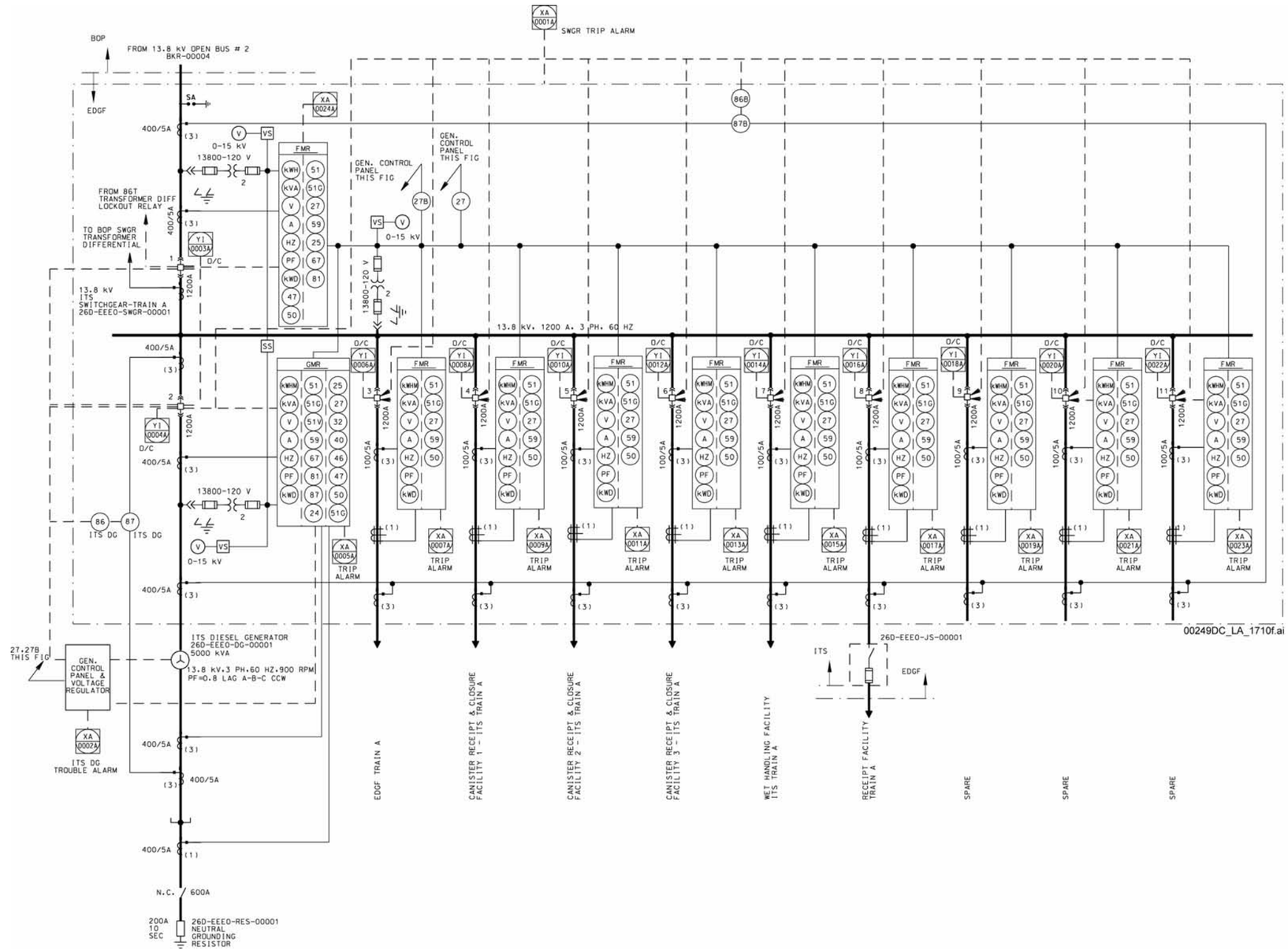

NOTE: BOP = balance of plant.

Figure 1.4.1-10. Emergency Diesel Generator Facility ITS Train A 13.8 kV Single Line Diagram

INTENTIONALLY LEFT BLANK

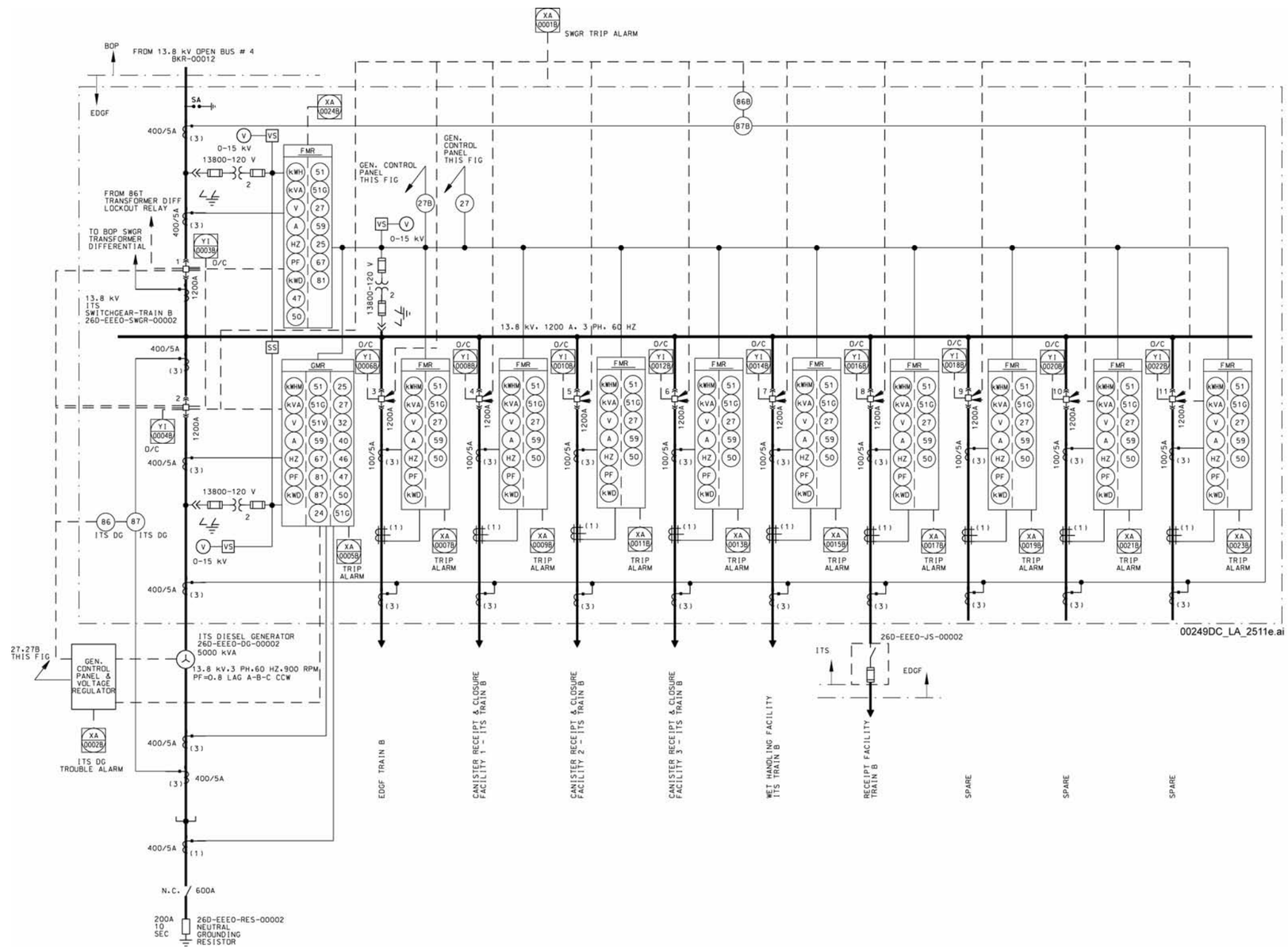

Figure 1.4.1-11. Emergency Diesel Generator Facility ITS Train B 13.8 kV Single Line Diagram

NOTE: BOP = balance of plant.

INTENTIONALLY LEFT BLANK

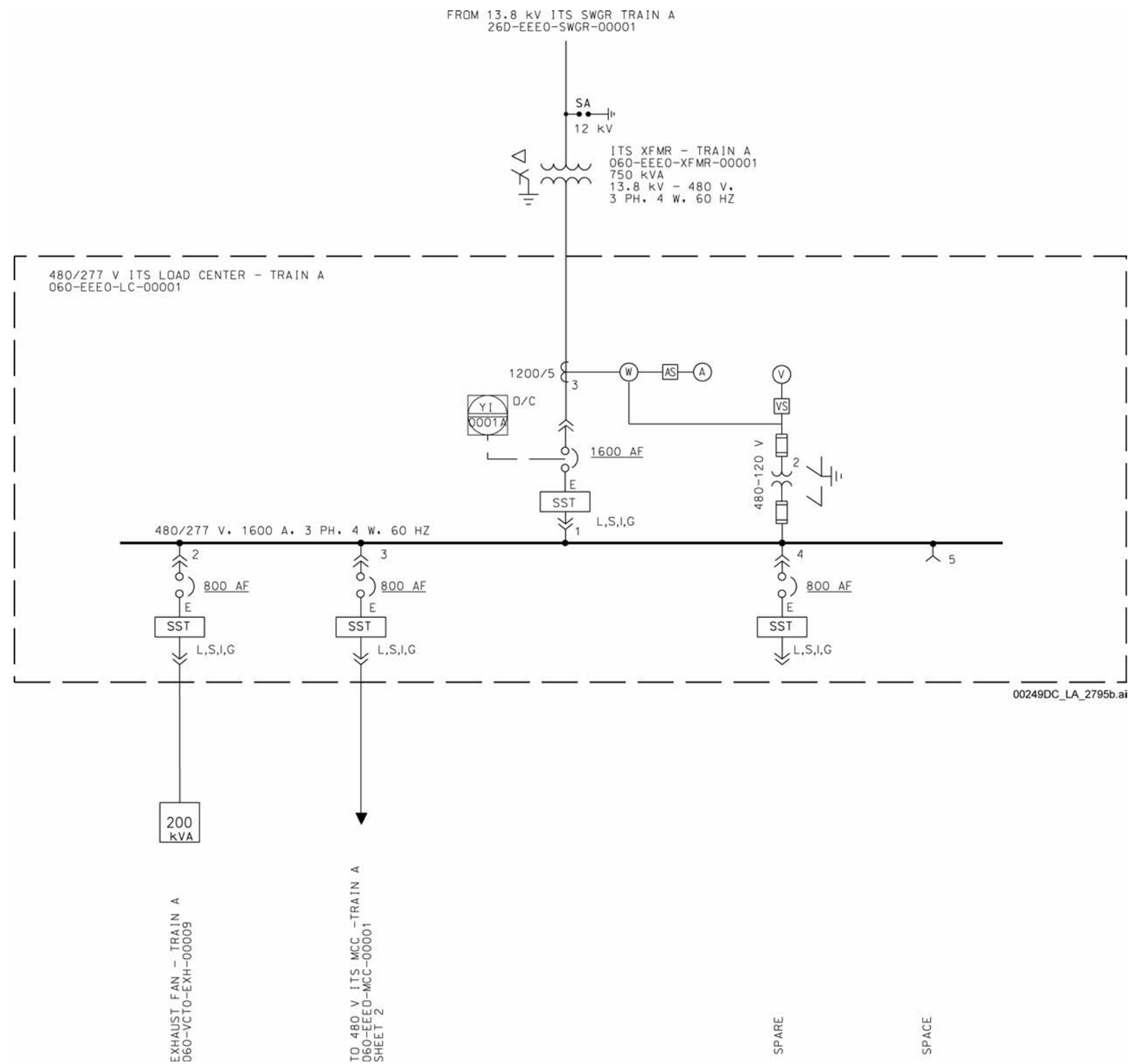

Figure 1.4.1-12. Canister Receipt and Closure Facility ITS AC Electrical Power Train A (Sheet 1 of 2)

INTENTIONALLY LEFT BLANK

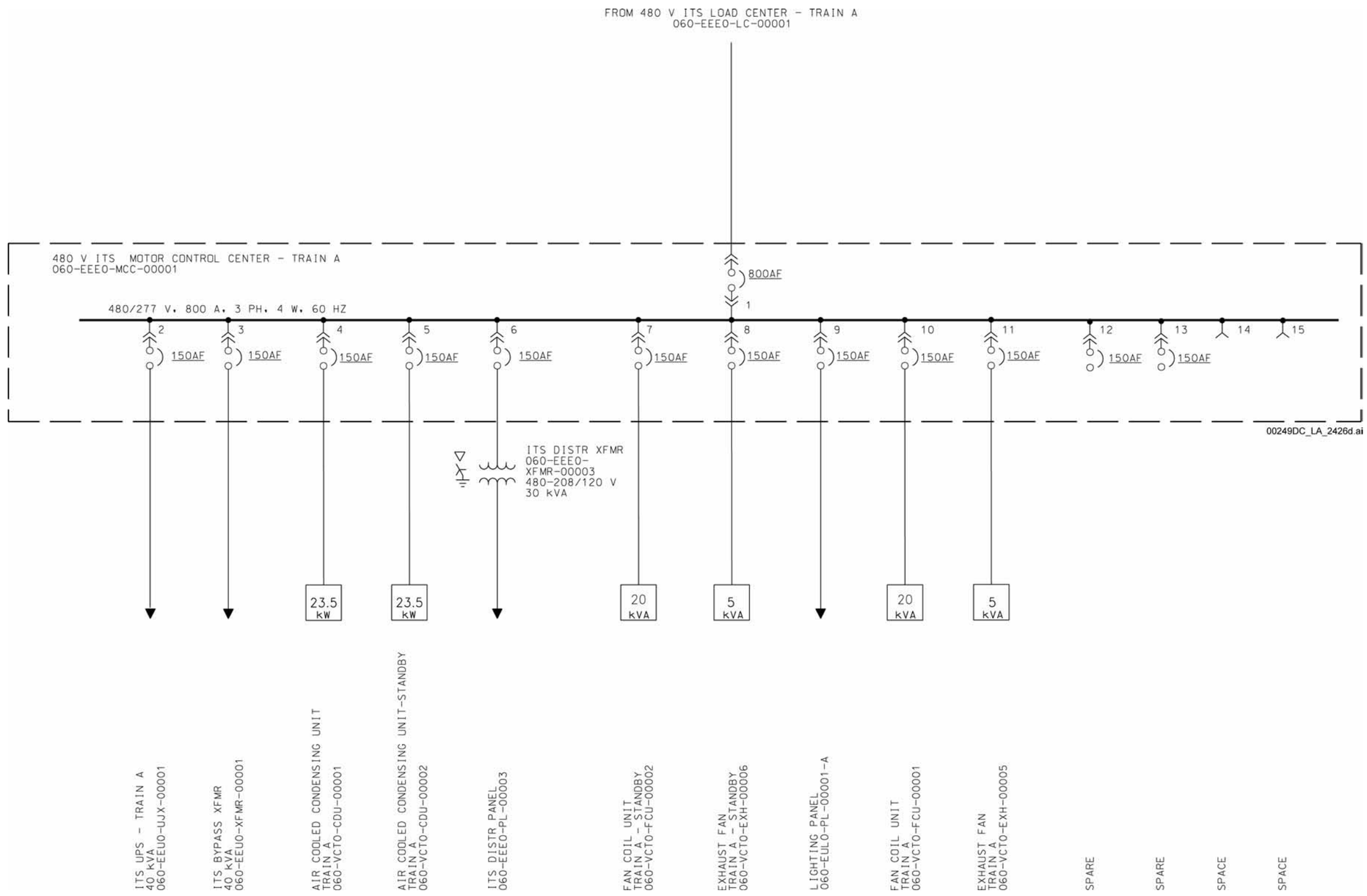

Figure 1.4.1-12. Canister Receipt and Closure Facility ITS AC Electrical Power Train A (Sheet 2 of 2)

INTENTIONALLY LEFT BLANK

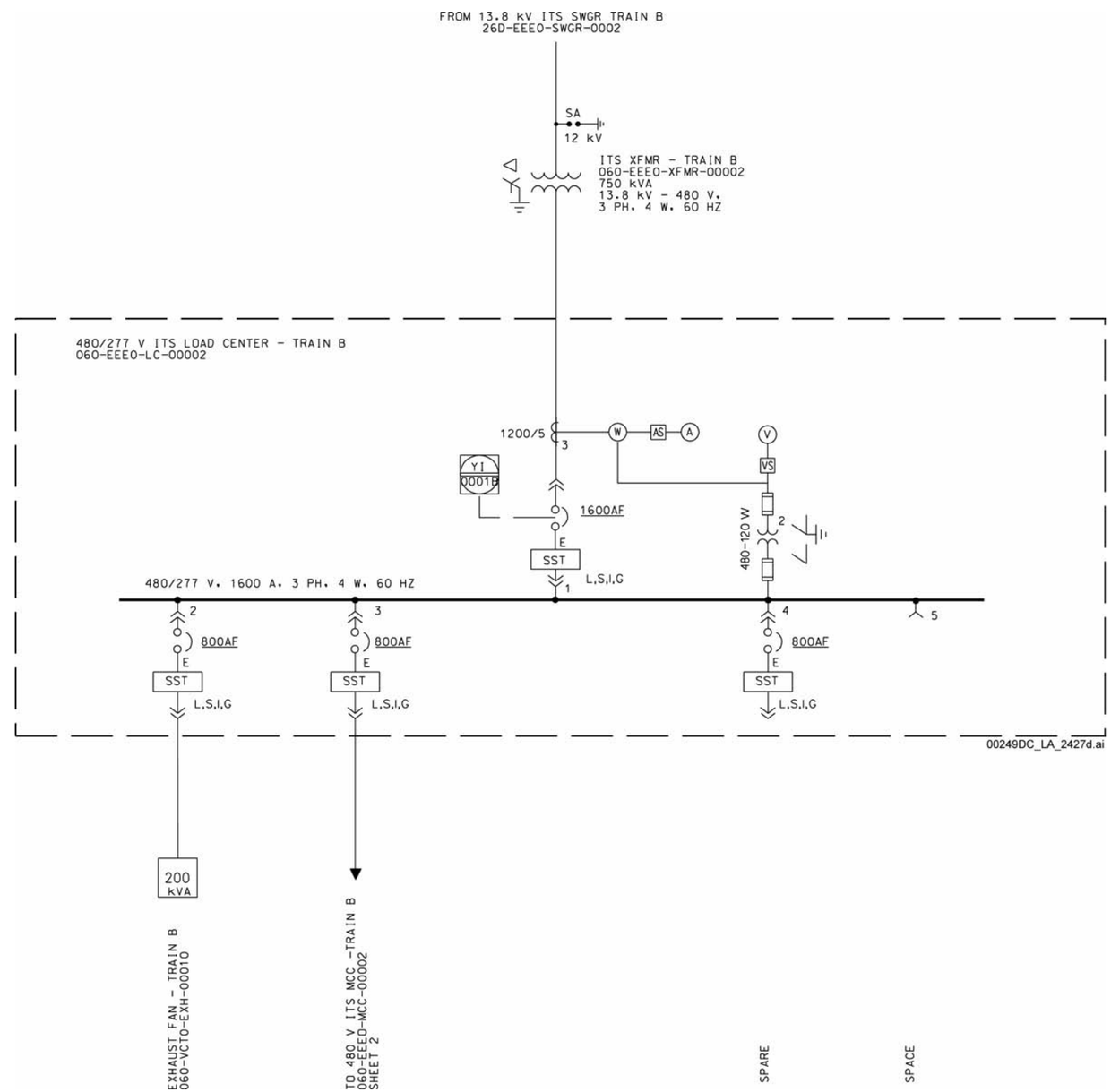

Figure 1.4.1-13. Canister Receipt and Closure Facility ITS AC Electrical Power Train B (Sheet 1 of 2)

INTENTIONALLY LEFT BLANK

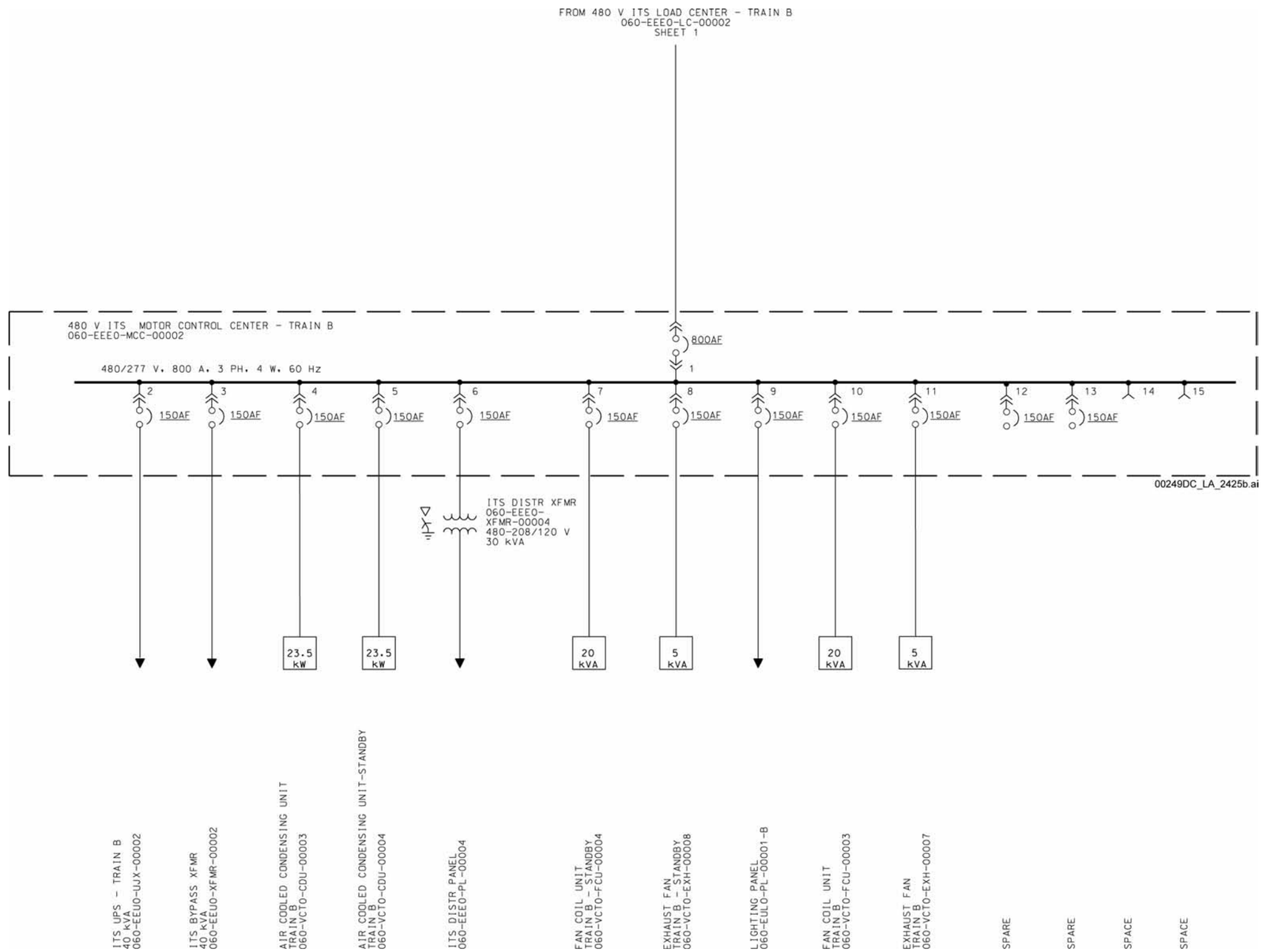

Figure 1.4.1-13. Canister Receipt and Closure Facility ITS AC Electrical Power Train B (Sheet 2 of 2)

INTENTIONALLY LEFT BLANK

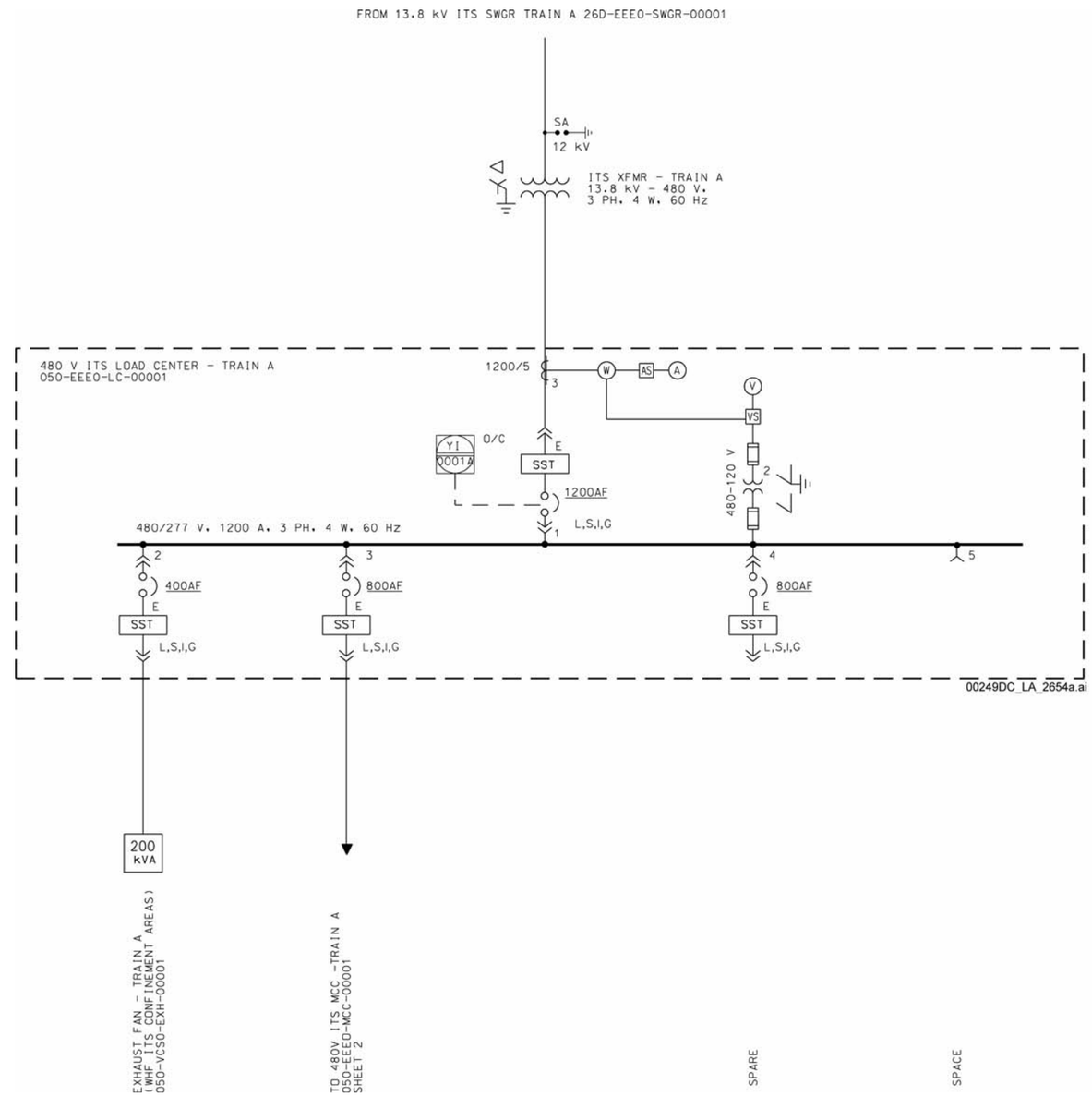

NOTE: See Figure 1.4.1-10 for source of power.

Figure 1.4.1-14. Wet Handling Facility ITS AC Electrical Power Train A (Sheet 1 of 2)

INTENTIONALLY LEFT BLANK

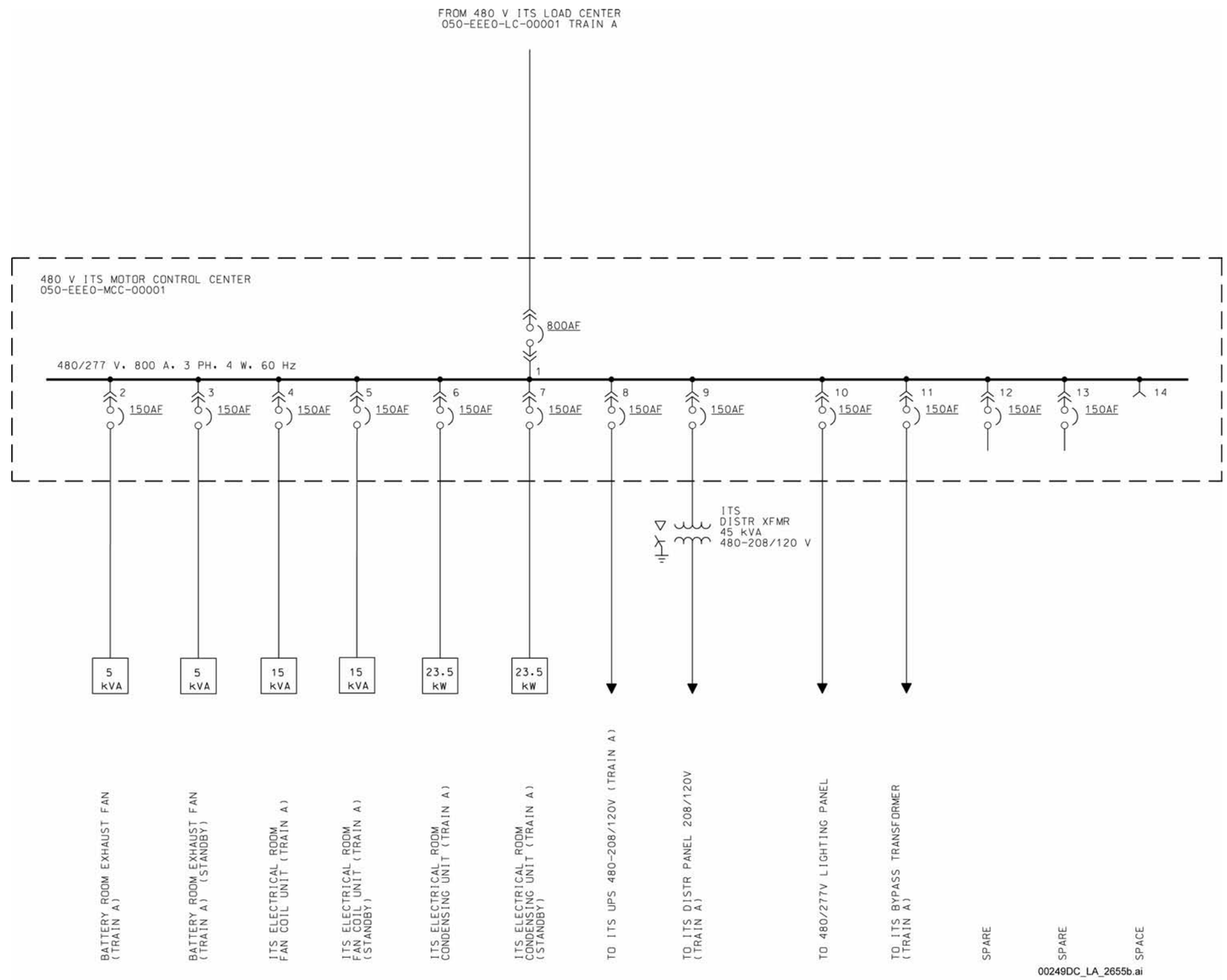

Figure 1.4.1-14. Wet Handling Facility ITS AC Electrical Power Train A (Sheet 2 of 2)

INTENTIONALLY LEFT BLANK

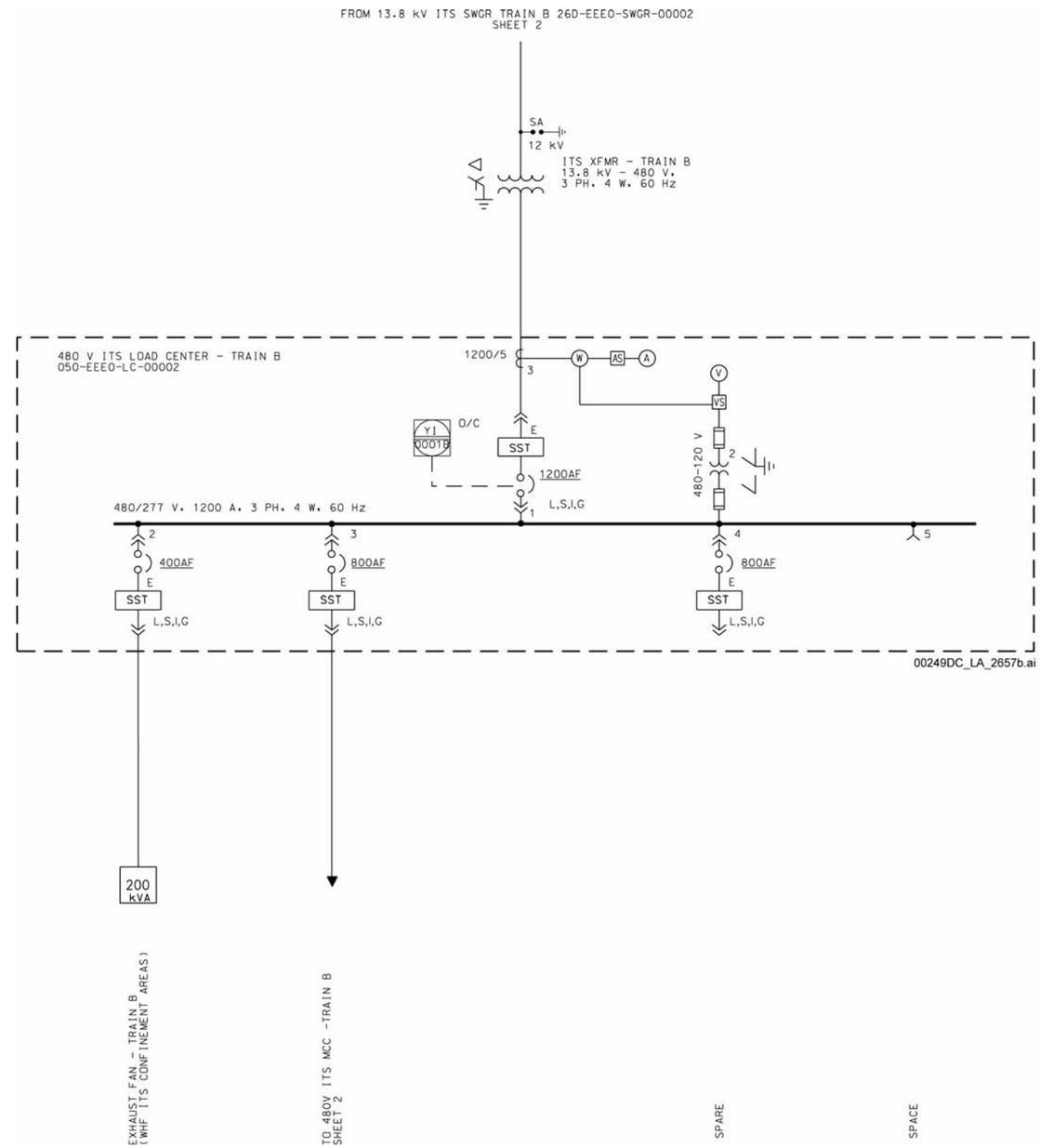

NOTE: See Figure 1.4.1-11 for source of power.

Figure 1.4.1-15. Wet Handling Facility ITS AC Electrical Power Train B (Sheet 1 of 2)

INTENTIONALLY LEFT BLANK

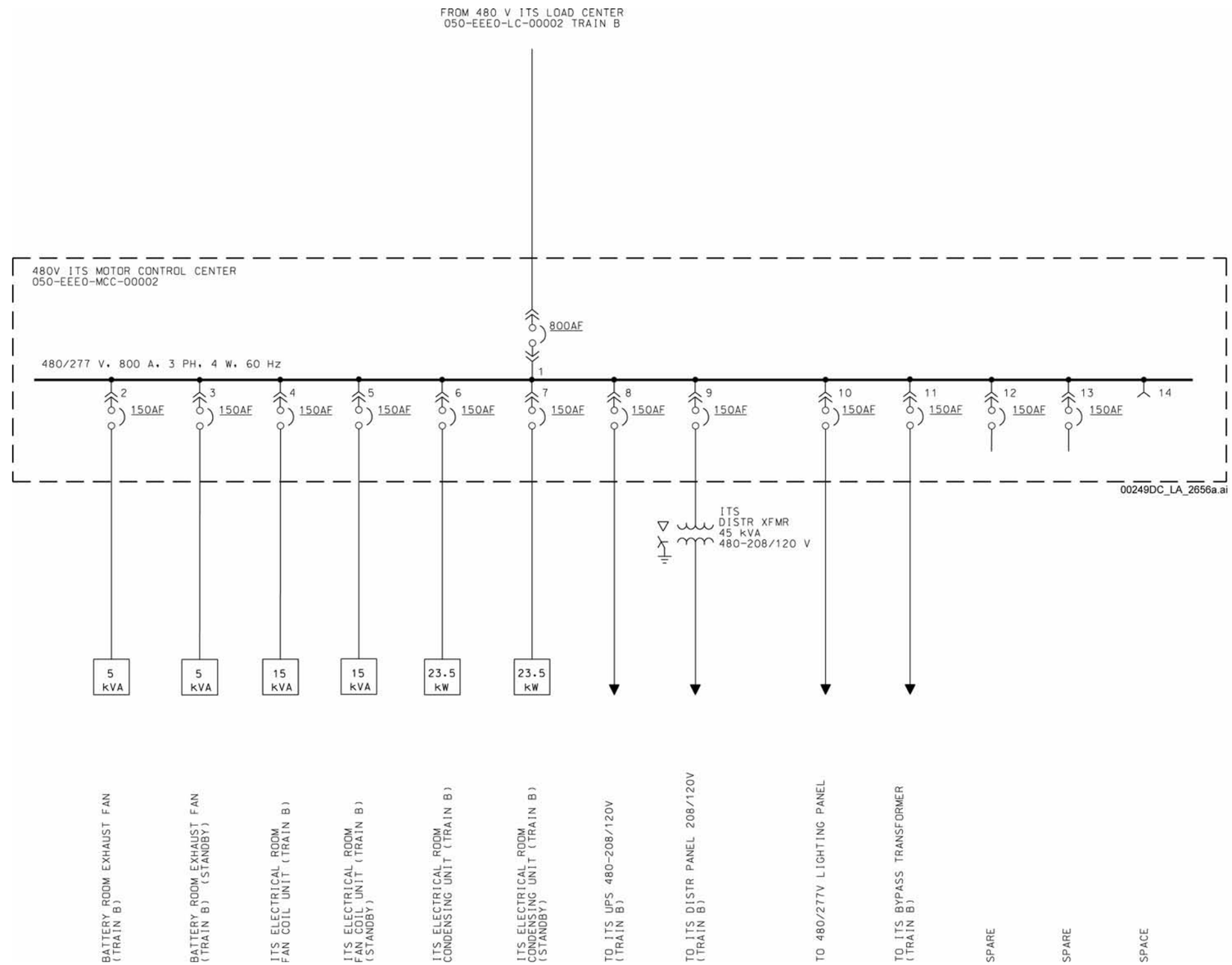

Figure 1.4.1-15. Wet Handling Facility ITS AC Electrical Power Train B (Sheet 2 of 2)

INTENTIONALLY LEFT BLANK

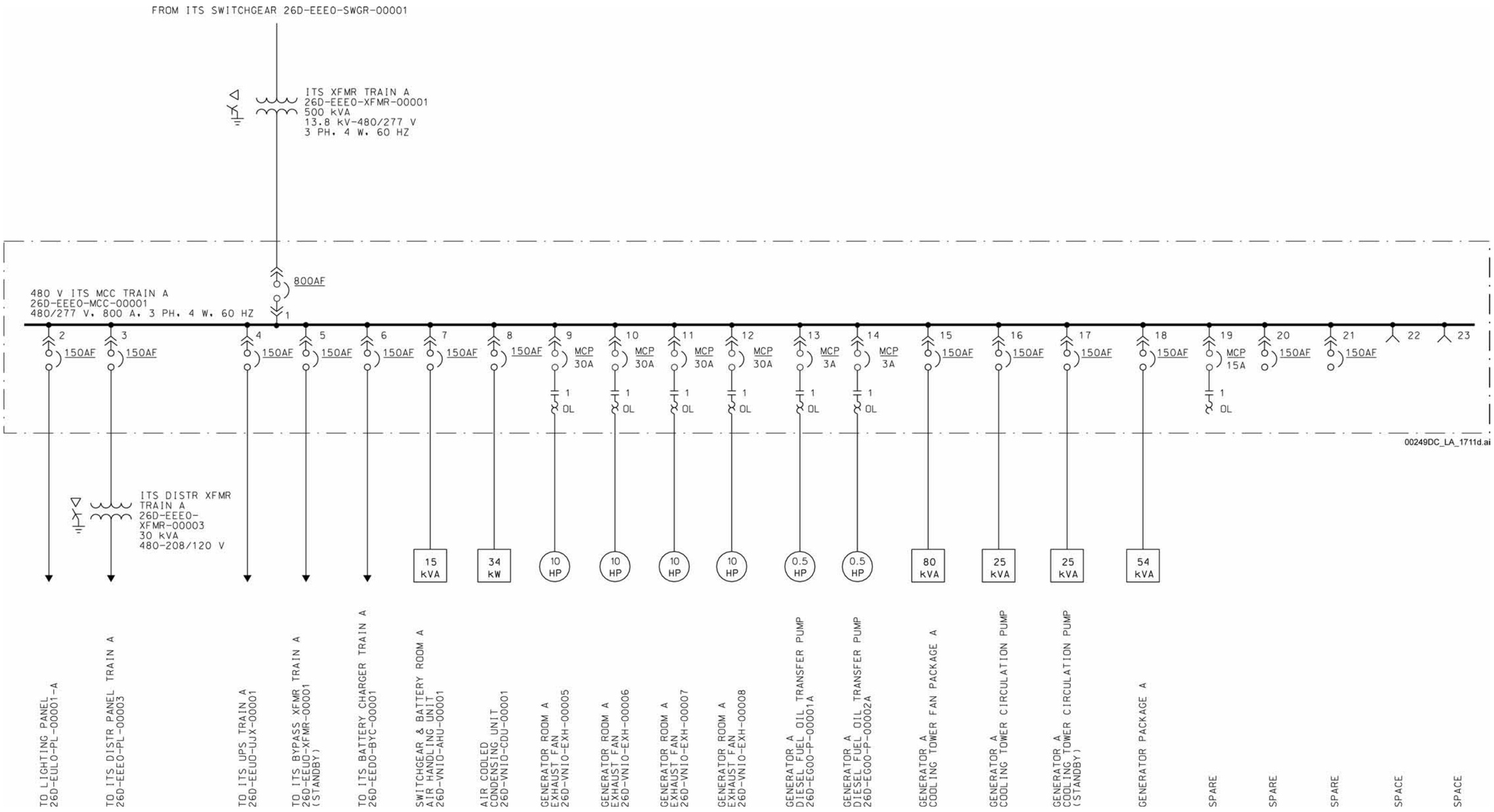

Figure 1.4.1-16. Emergency Diesel Generator Facility ITS Train A 480 V Single Line Diagram

INTENTIONALLY LEFT BLANK

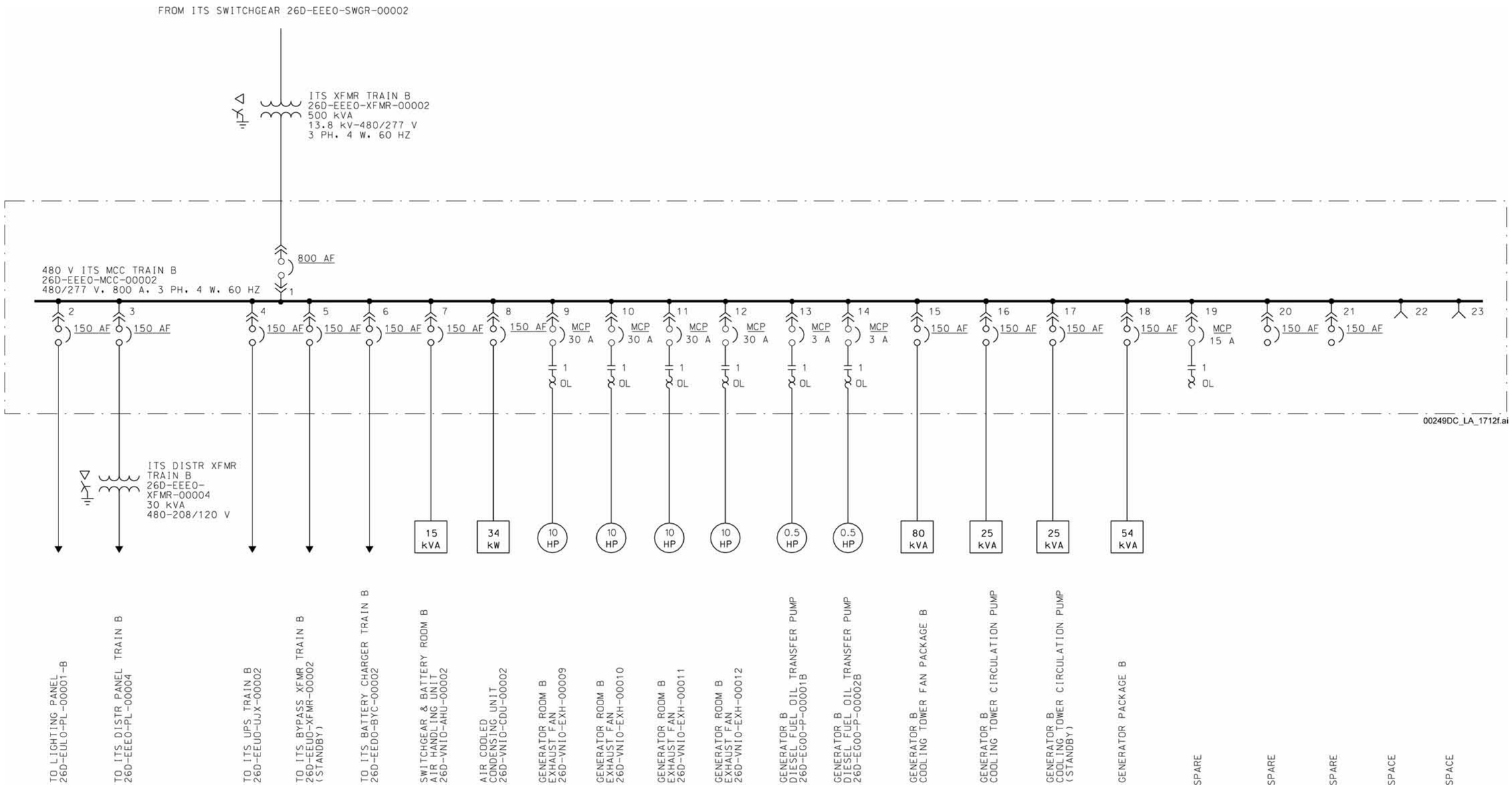

Figure 1.4.1-17. Emergency Diesel Generator Facility ITS Train B 480 V Single Line Diagram

INTENTIONALLY LEFT BLANK

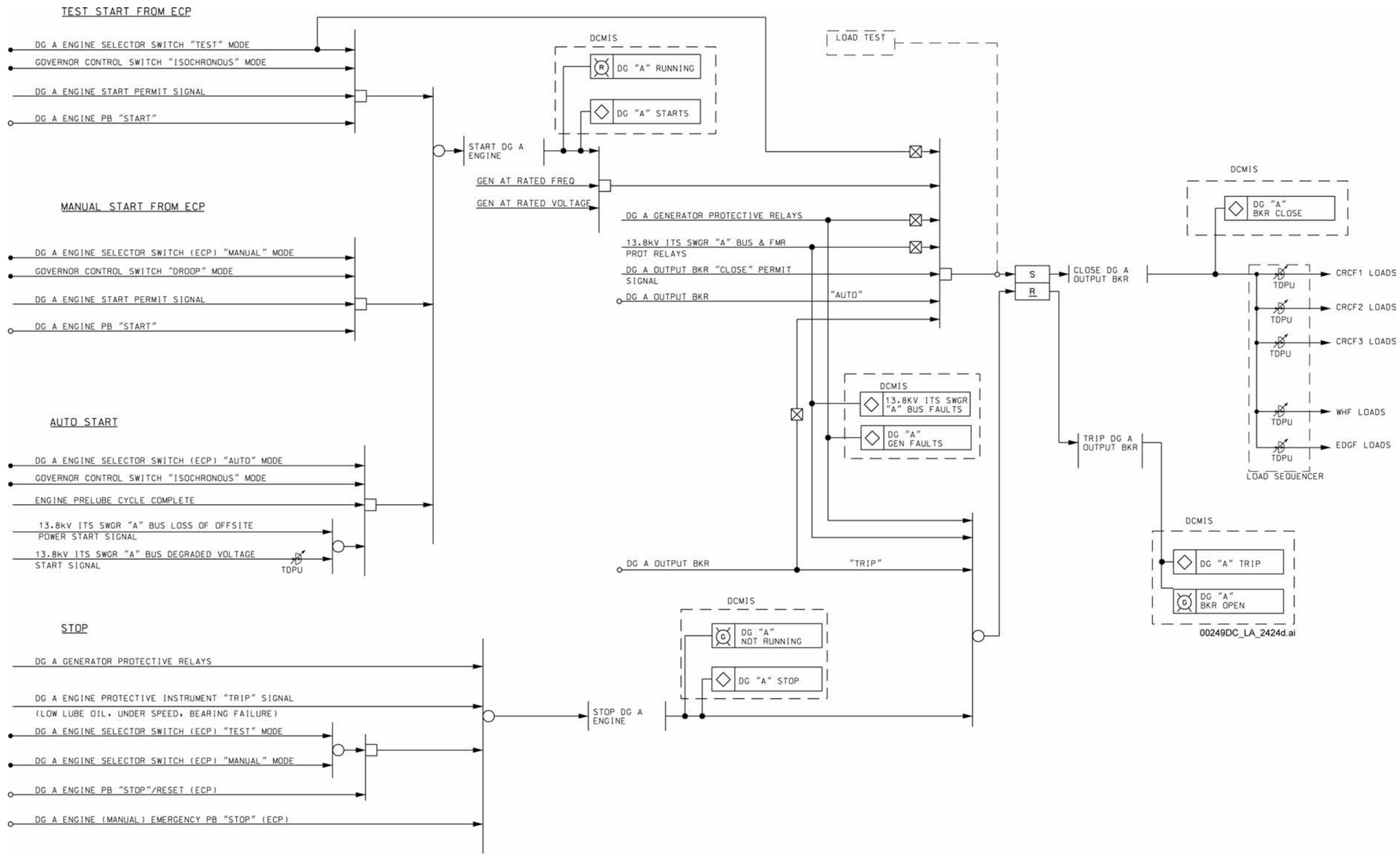

NOTE: DG = diesel generator; ECP = engine control panel; PB = push button; TDPU = time delay pick up.

Figure 1.4.1-18. ITS Diesel Generators Train A Logic Diagram

INTENTIONALLY LEFT BLANK

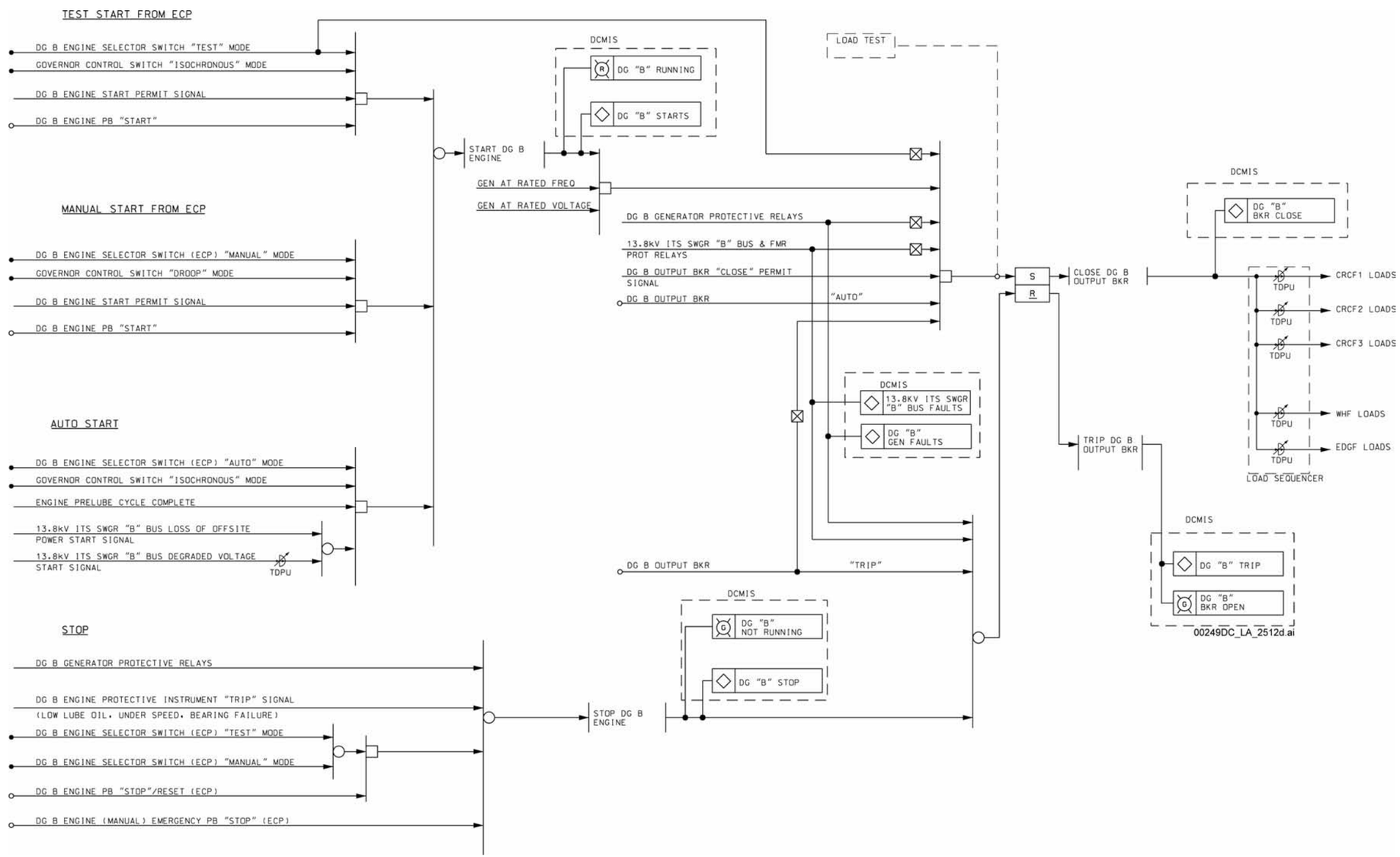

NOTE: DG = diesel generator; ECP = engine control panel; PB = push button; TDPU = time delay pick up.

Figure 1.4.1-19. ITS Diesel Generators Train B Logic Diagram

INTENTIONALLY LEFT BLANK

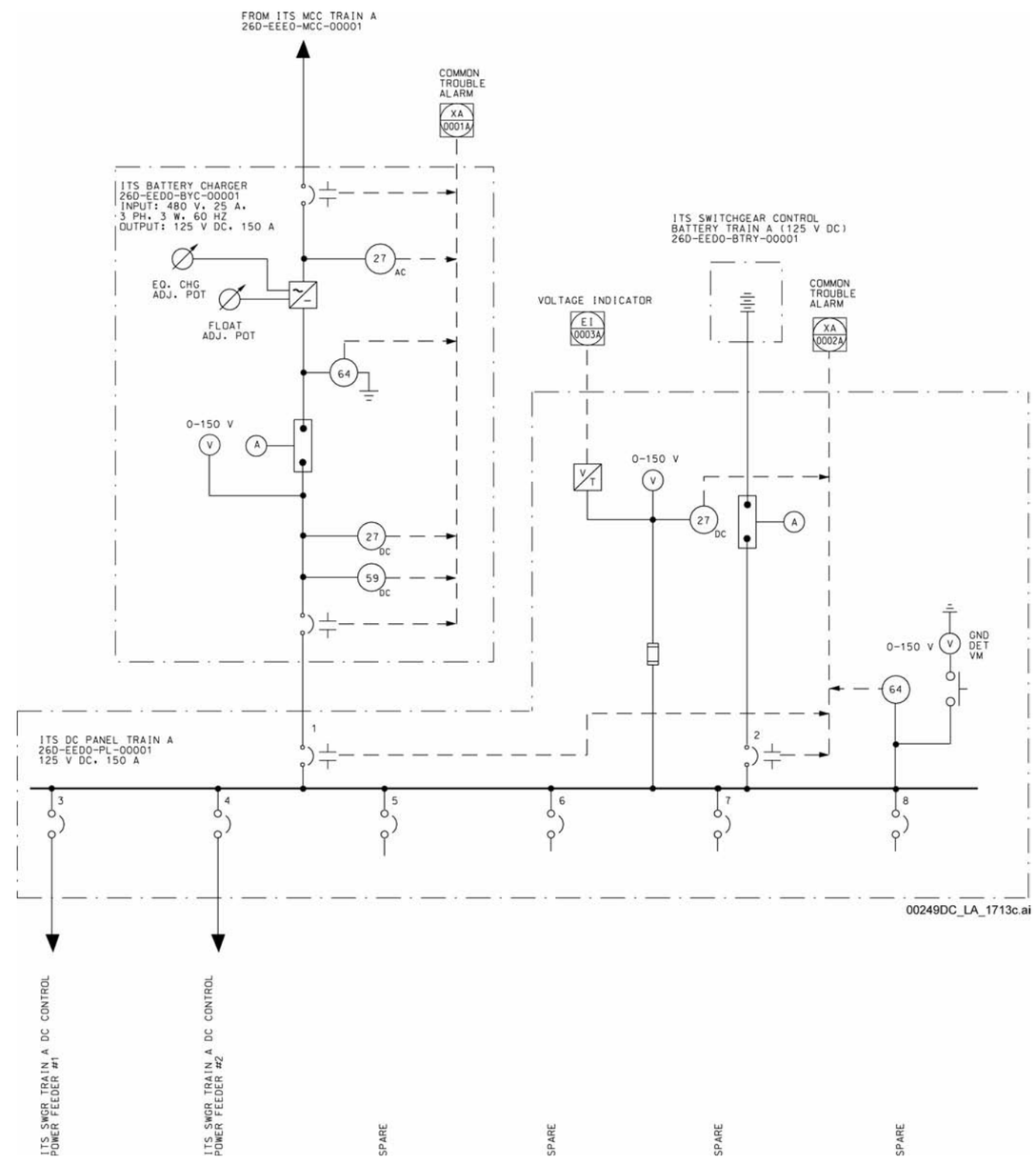

Figure 1.4.1-20. Emergency Diesel Generator Facility ITS 125 V DC Battery Subsystem Train A Single Line Diagram

INTENTIONALLY LEFT BLANK

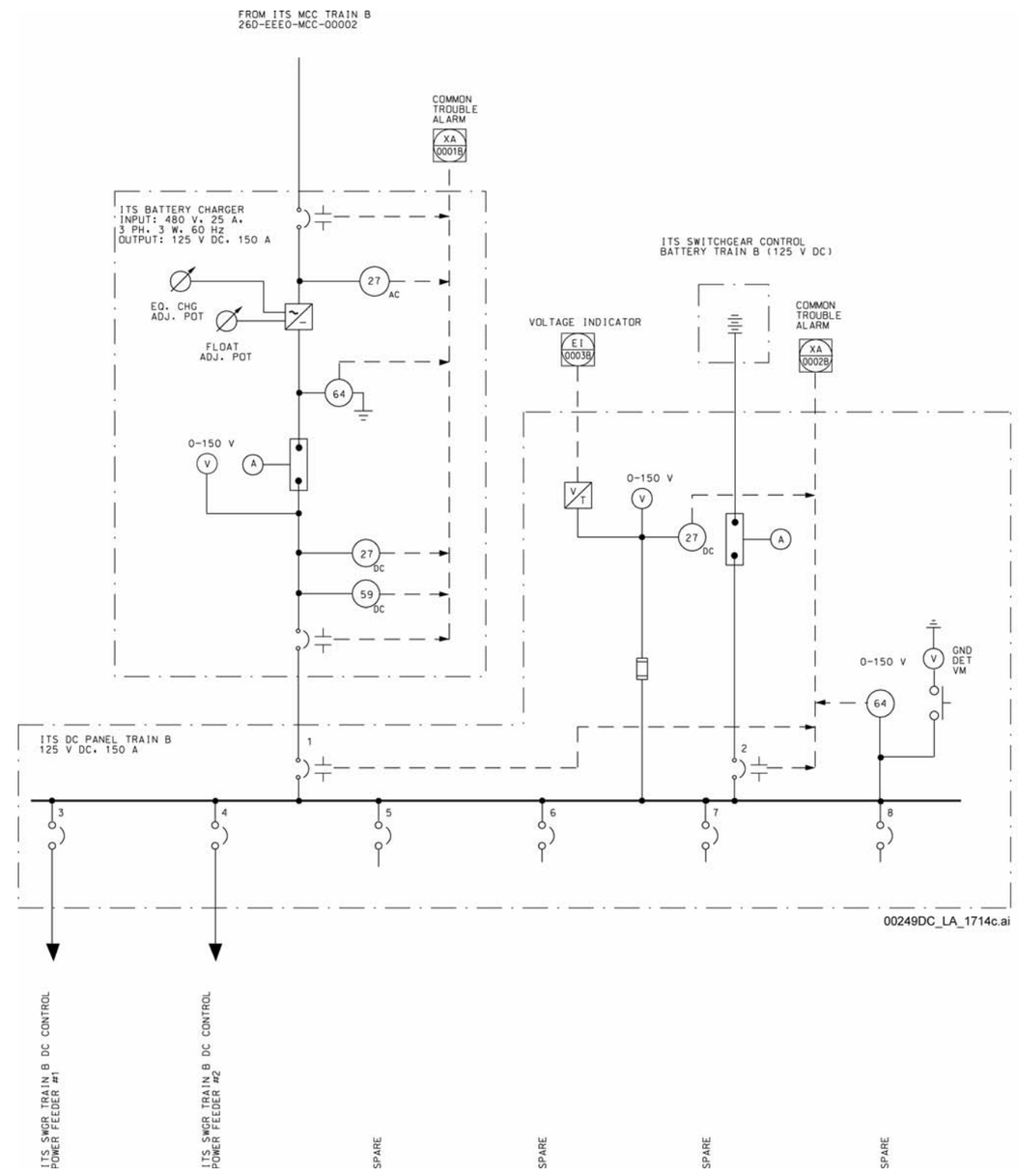

Figure 1.4.1-21. Emergency Diesel Generator Facility ITS 125 V DC Battery Subsystem Train B Single Line Diagram

INTENTIONALLY LEFT BLANK

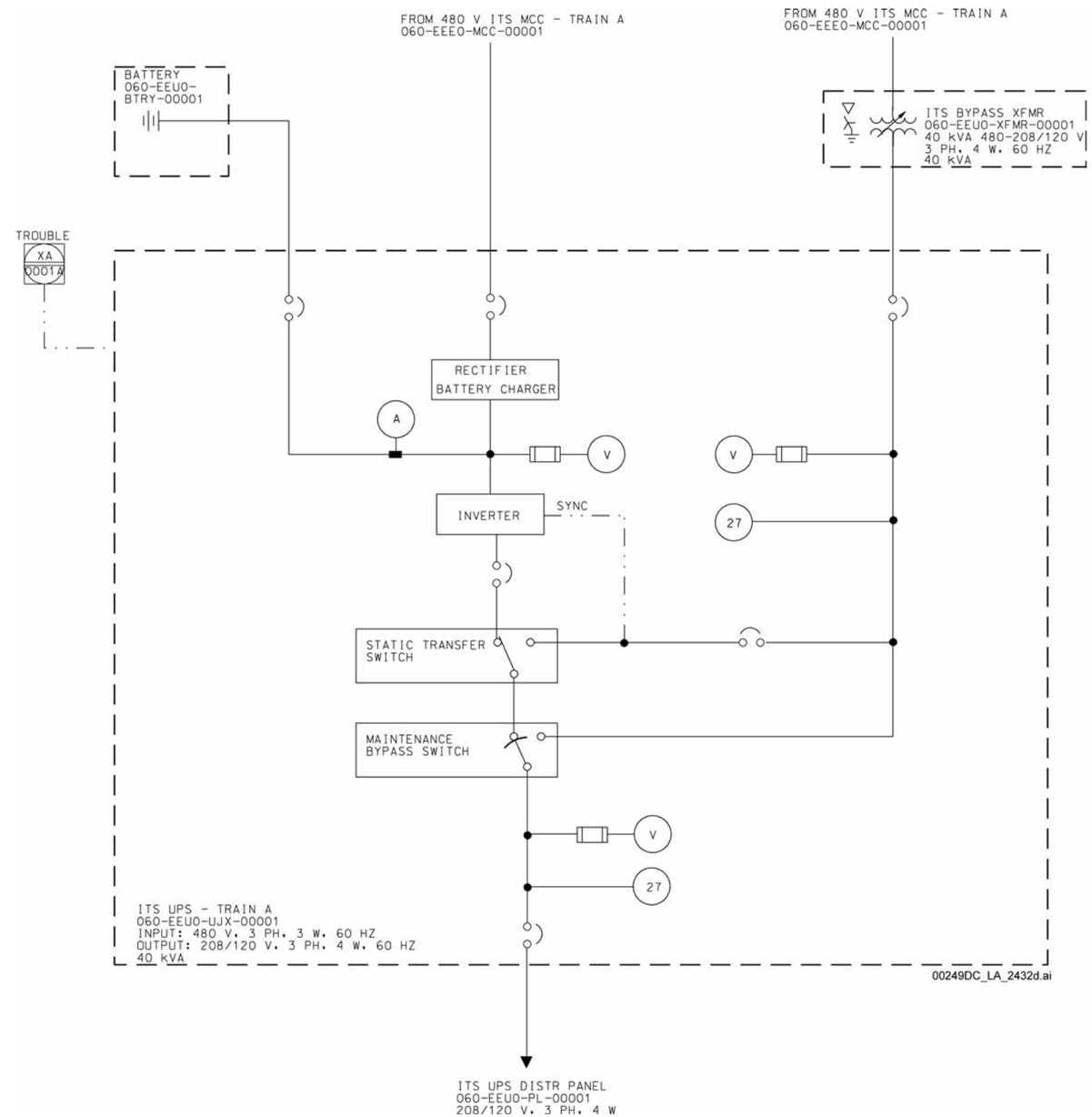

Figure 1.4.1-22. Canister Receipt and Closure Facility
ITS Uninterruptible Power Supply
Train A

INTENTIONALLY LEFT BLANK

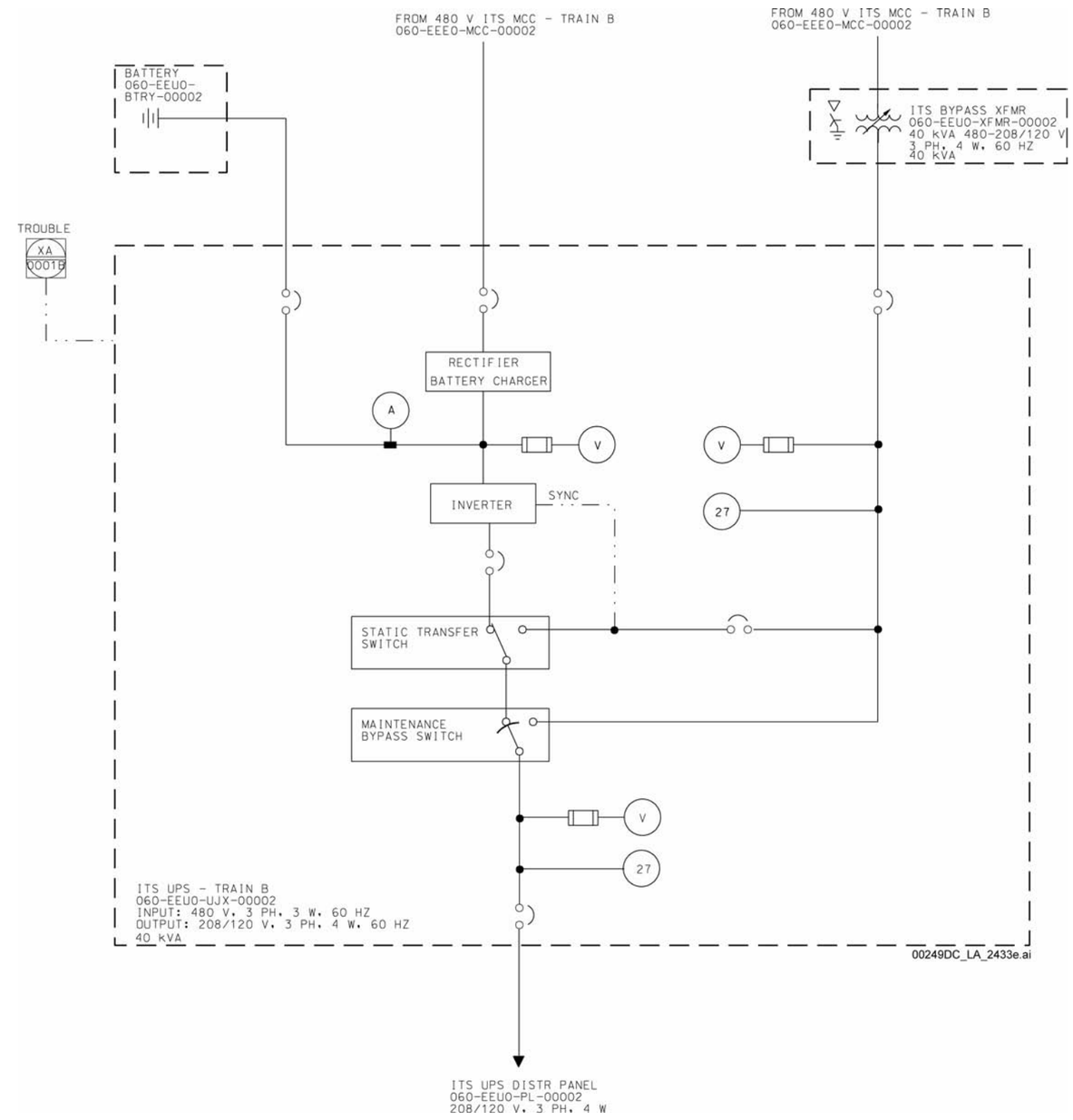

Figure 1.4.1-23. Canister Receipt and Closure Facility
ITS Uninterruptible Power Supply
Train B

INTENTIONALLY LEFT BLANK

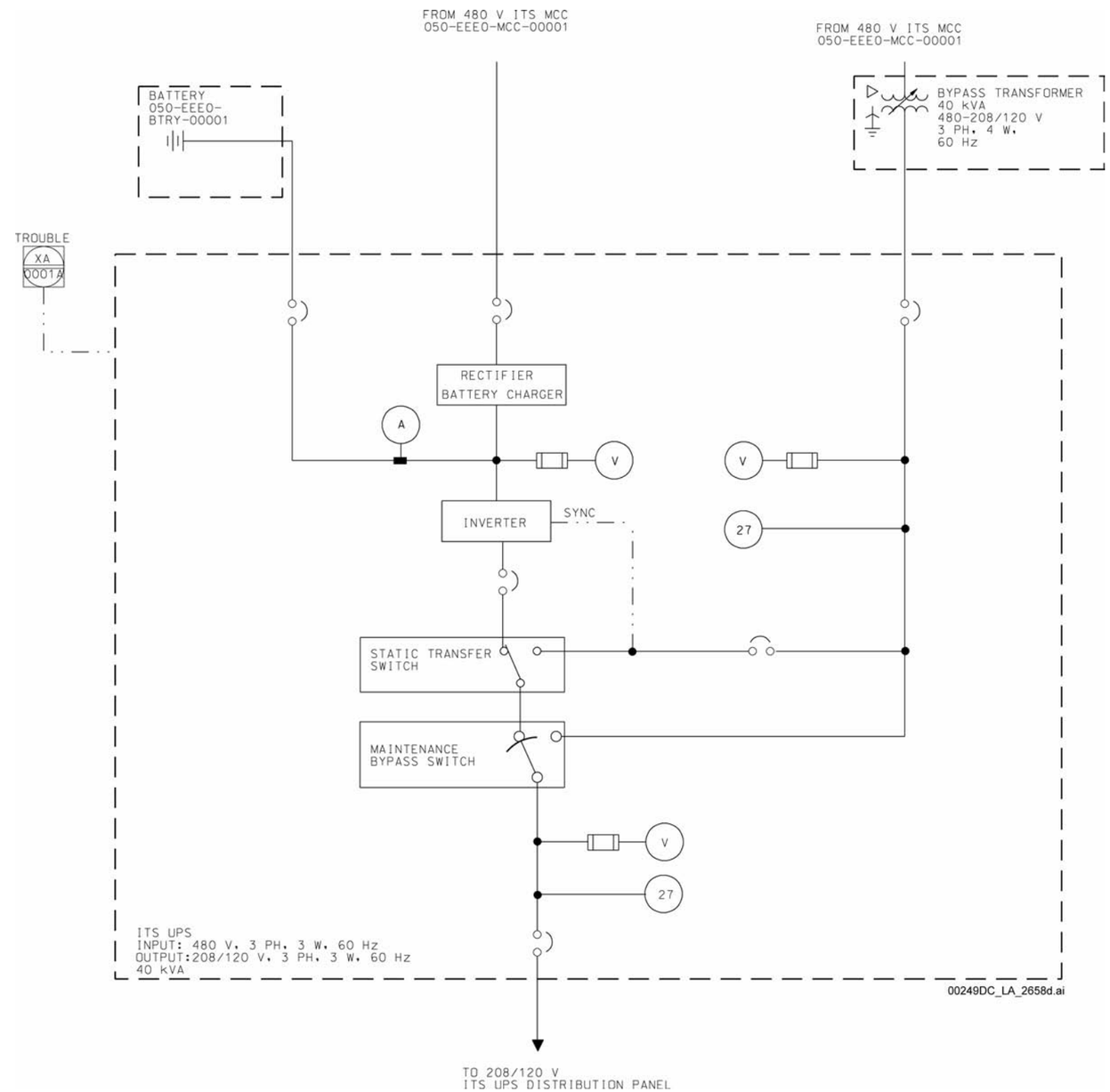

Figure 1.4.1-24. Wet Handling Facility ITS Uninterruptible Power Supply Train A

INTENTIONALLY LEFT BLANK

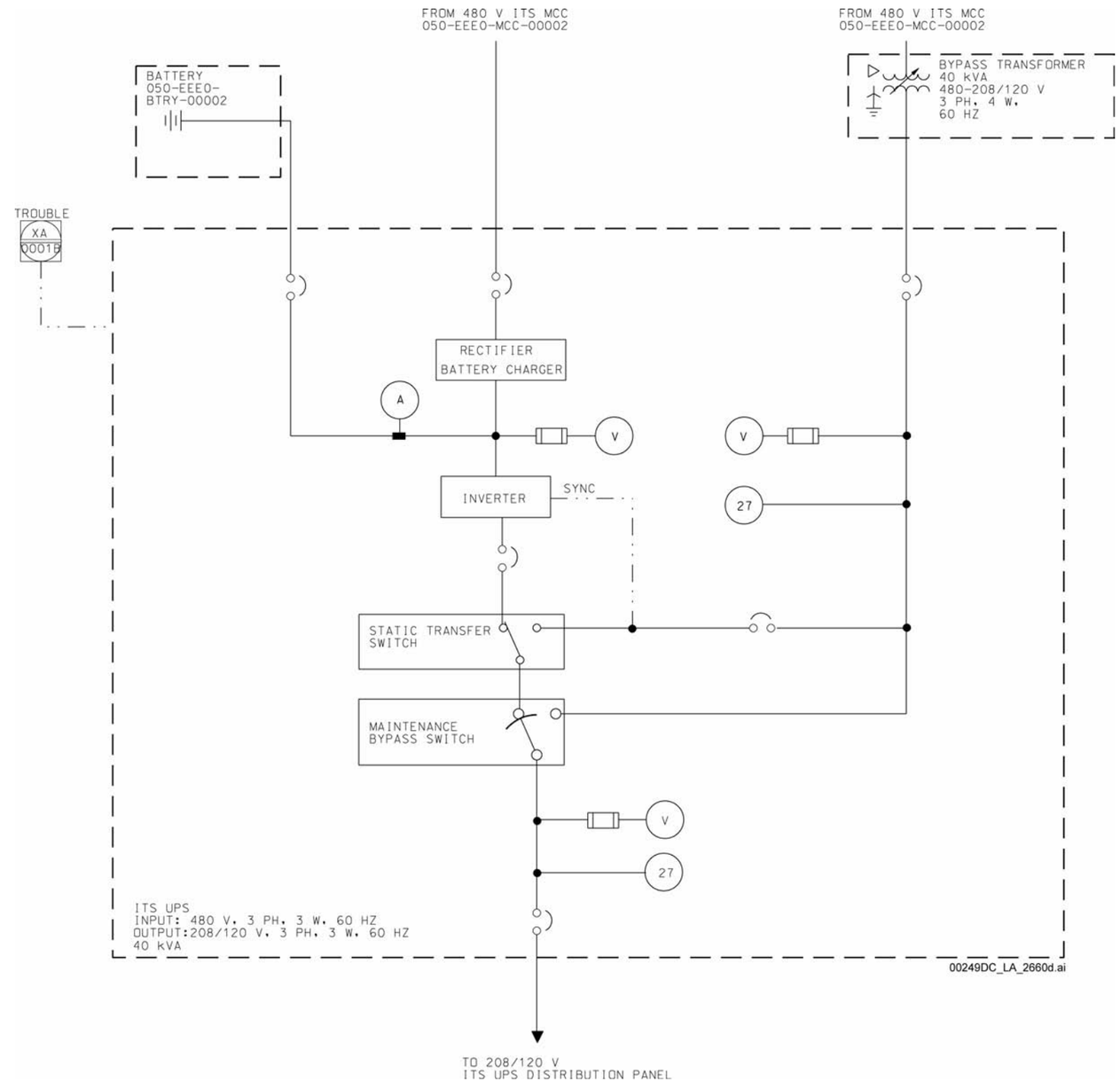

Figure 1.4.1-25. Wet Handling Facility ITS Uninterruptible Power Supply Train B

INTENTIONALLY LEFT BLANK

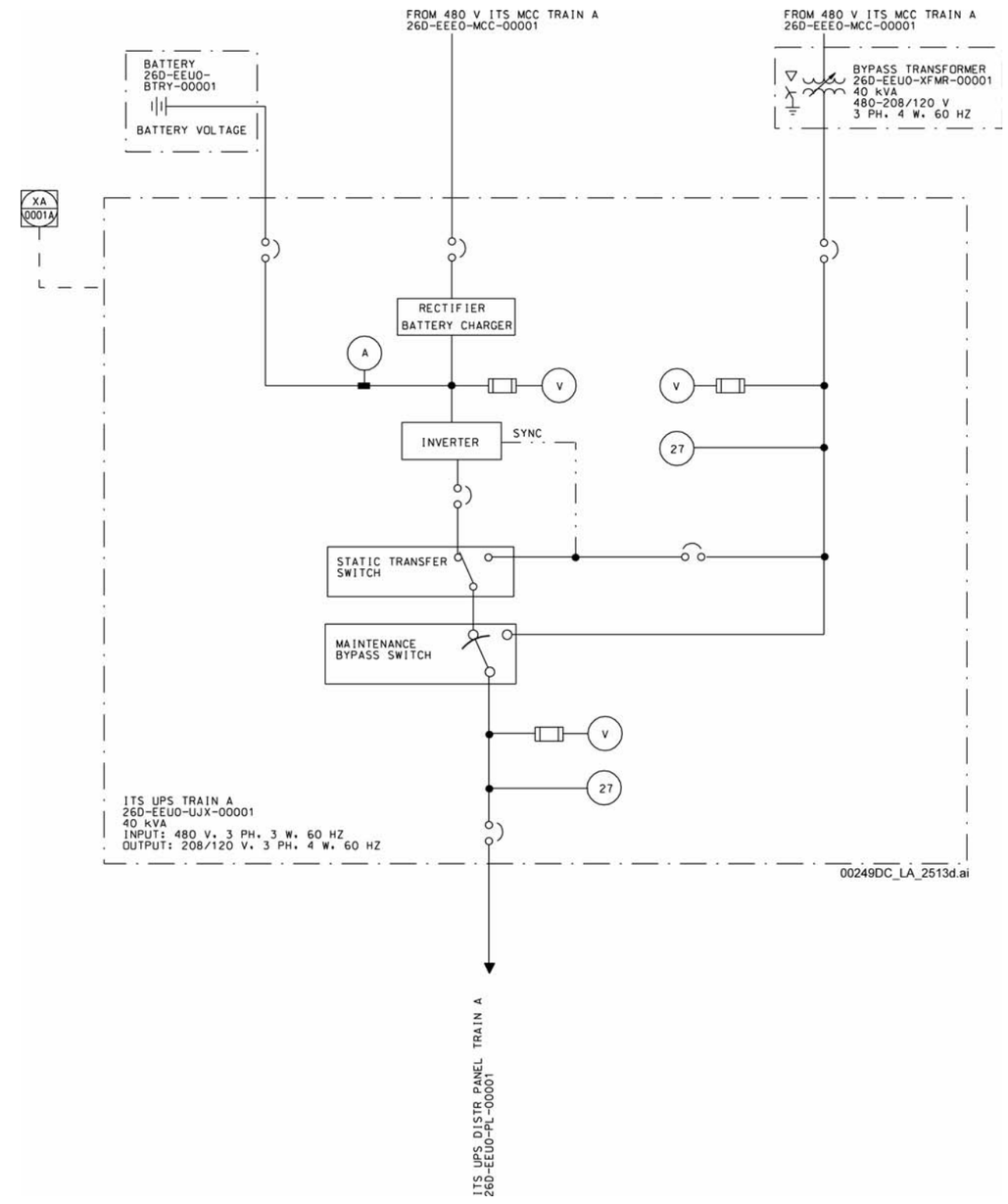

Figure 1.4.1-26. Emergency Diesel Generator Facility ITS Train A Uninterruptible Power Supply Single Line Diagram

INTENTIONALLY LEFT BLANK

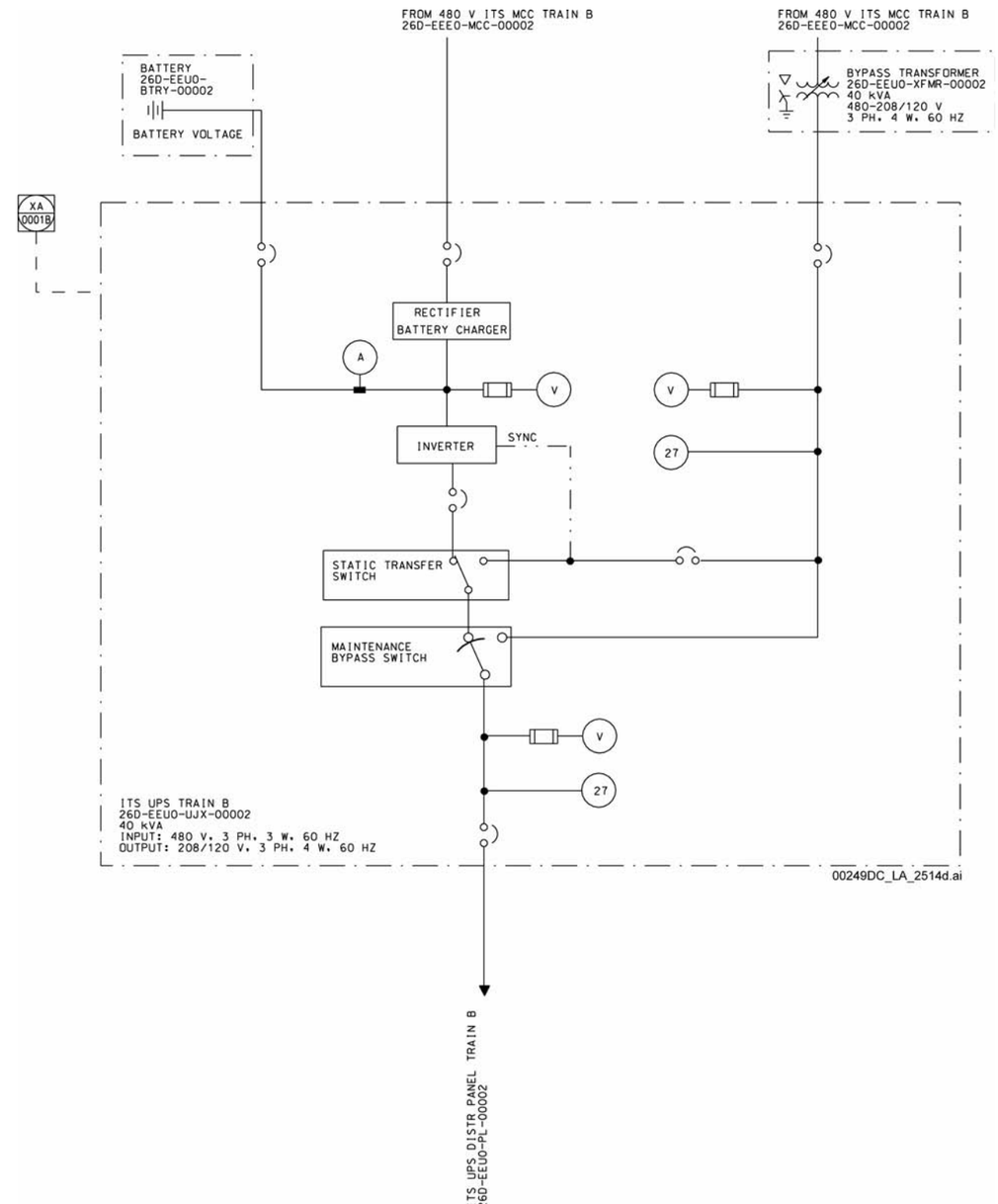

Figure 1.4.1-27. Emergency Diesel Generator Facility ITS Train B Uninterruptible Power Supply Single Line Diagram

INTENTIONALLY LEFT BLANK

CONTENTS

Page

1.4.2 Controls and Monitoring 1.4.2-1
1.4.2.1 Digital Control and Management Information 1.4.2-2
1.4.2.2 Radiation/Radiological Monitoring. 1.4.2-7
1.4.2.3 Environmental/Meteorological Monitoring System 1.4.2-9
1.4.2.4 Communications 1.4.2-12
1.4.2.5 Postevent Monitoring 1.4.2-18
1.4.2.6 General References 1.4.2-19

INTENTIONALLY LEFT BLANK

TABLES

Page

1.4.2-1. ITS Controls 1.4.2-23
1.4.2-2. Location of Meteorological Towers and Instruments Associated with Each Tower 1.4.2-25
1.4.2-3. Selected Postevent Monitoring Parameters 1.4.2-26

INTENTIONALLY LEFT BLANK

FIGURES

Page

1.4.2-1. Digital Control and Management Information System Architecture 1.4.2-29
1.4.2-2. Digital Control and Management Information System Block Diagram (Sheet 1 of 2). 1.4.2-31
1.4.2-2. Digital Control and Management Information System Block Diagram (Sheet 2 of 2). 1.4.2-33
1.4.2-3. Radiation/Radiological Monitoring System Functional Block Diagram 1.4.2-35
1.4.2-4. Environmental/Meteorological Monitoring System Functional Block Diagram 1.4.2-37
1.4.2-5. Communications System Functional Block Diagram. 1.4.2-39
1.4.2-6. Network Architecture 1.4.2-41
1.4.2-7. Communications System Organization 1.4.2-42
1.4.2-8. Site Topology—SONET Configuration—Surface/Subsurface 1.4.2-43
1.4.2-9. Site Topology—Wireless Configuration—Main and Emplacement Drifts 1.4.2-44
1.4.2-10. Boundaries and Interfaces. 1.4.2-45
1.4.2-11. Emergency Management Communications 1.4.2-46

INTENTIONALLY LEFT BLANK

1.4.2 Controls and Monitoring

[NUREG-1804, Section 2.1.1.2.3: AC 1, AC 2, AC 3, AC 6; Section 2.1.1.6.3: AC 1; Section 2.1.1.7.3.1: AC 1; HLWRS-ISG-02 Section 2.1.1.2.3: AC 2]

This section describes the controls and monitoring systems that serve the surface and subsurface facilities.

The repository employs the following approach to control operations. Repository-certified operators are trained in accordance with the program described in Section 5.3. The certified operators follow approved procedures that are based on industry experience and tailored to the specific geologic repository operations area (GROA) tasks. Automation is used to perform repetitive functions when the failure of the automation would not result in an event sequence. This approach minimizes the number of challenges to the important-to-safety (ITS) controls and hardwired interlocks and devices that reduce the frequency of initiating events or mitigate the consequences of Category 1 and Category 2 event sequences. These ITS devices ensure safe operations and safe conditions. When programmable logic controllers or other computer-based controllers are used, they are used for operational control only and are constrained by the hardwired ITS controls associated with the system. Table 1.4.2-1 lists the ITS structures, systems, or components (SSCs) that perform safety functions with ITS controls.

Many of the GROA operations are repetitive, and thus automation is used where practical. These automated sequences may be short and simple or may be collections of simple sequences with branching as determined by sensed conditions. The operator causes an operational sequence to be performed by selecting the programmed mode (if not already in that mode), selecting the operational sequence to be performed, inputting any information or parameters to be used in the sequence (such as location to which the equipment should move), and then giving the command to initiate the sequence. The control system then executes the steps associated with that sequence, including the verification that any required permissives are met for the steps. Should a step not be completed properly, the control system either stops and aborts the sequence or (if in the programming) executes the step identified for improper completion; in either case, a message is provided to the operator. The operator also has the capability to stop the sequence at any time. At the completion of the sequence, the control system identifies completion to the operator, who then determines the next appropriate command in accordance with operating procedures and GROA and equipment conditions. Use of automation for these repetitive functions minimizes the potential for operator error during these operations and simplifies the associated operating procedures.

The GROA waste handling equipment is designed to remain safely in position upon loss of power. During any condition that causes one or more systems or components to lose power, the affected systems or components simply stop operations and hold until power is restored or manual recovery is performed. The control system senses the loss of power and suspends any automated sequence; upon restoration of power, the control system requires an operator command for any equipment actions.

1.4.2.1 Digital Control and Management Information

[NUREG-1804, Section 2.1.1.2.3: AC 1(2), (3), (4), AC 2(1), (2), (3), AC 3, AC 6]

1.4.2.1.1 System Description

The digital control and management information system (DCMIS) is non-ITS.

Functions—With the exception of certain mechanical handling equipment, such as some jib cranes that are controlled only locally and with no interface to the DCMIS, the DCMIS provides control and monitoring for the GROA and adjacent support facilities during the preclosure period, including the postemplacement period through closure. This control and monitoring function is accomplished through human–machine interface consoles located in the operations rooms of the various facilities and in the Central Control Center in the Central Control Center Facility (CCCF). Control and monitoring associated with a particular facility are provided in that facility operations room with monitoring available in the Central Control Center. Operations for that facility are controlled from the operations room and do not require actions from the Central Control Center to carry out their execution.

Overall GROA and adjacent support facilities control and monitoring, including those associated with emplacement of waste packages, are provided in the Central Control Center. Should conditions warrant, the operators in the Central Control Center can stop equipment in the surface handling facilities. After this action, reset of the stop command must be performed from the Central Control Center before control from the facility operations rooms can be resumed.

Equipment is controlled in various ways as appropriate. The ITS controls are hardwired in the equipment circuitry to reduce the frequency or mitigate the consequences of an event sequence; these controls cannot be overridden by the other controls. Bypasses are provided when required to return to normal operations from off-normal conditions, or for other situations, using key-locked switches wired into the circuitry. Use of the key-locked bypass switches is governed by administrative controls. Other non-ITS controls are hardwired in the circuitry using the methods and practices of applicable codes and standards, such as ASME NOG-1-2004 for cranes. Any integral controls with the equipment, such as programmable logic controllers or embedded controls, are interfaced with the DCMIS to control and monitor the equipment. And finally, the DCMIS is used to provide controls, using appropriate sensors for inputs, such as level for controlling pumps or system header pressure for controlling the position of recirculation valves. The DCMIS architecture is shown in Figure 1.4.2-1.

In the event of the Central Control Center becoming uninhabitable, the DCMIS is programmed such that surface facility operations can continue without interruption using human–machine interface consoles in the facility operations rooms and the local controls, where provided. Because of the nature of a distributed control system, the monitoring and control functions of the DCMIS are available at the facility consoles even if the hardware at the CCCF is compromised or unavailable. In the case of subsurface emplacement operations, an operator in the Central Control Center controls and monitors the transport and emplacement vehicle (TEV). Should the Central Control Center need to be evacuated, the TEV operations would cease at the end of the programmed sequence, waiting for the next operator command.

Control Philosophy—The following summarizes the overall philosophy of SSC control using the DCMIS:

- The GROA is a manned-operation facility, requiring operators to initiate and control sequential functions.
- Human actions and digital controllers are used for operational purposes but are not relied on to reduce the frequency or mitigate the consequences of Category 1 or Category 2 event sequences.
- Safety functions are implemented using mechanical, electromechanical, or electrical devices and designs with known, high reliability. Safety functions cannot be overridden by operators using the DCMIS.
- Active operator control occurs from only one location at a time, with priority given to controls sequentially closer to the equipment being operated. Operators in the facility operations room or in the Central Control Center can stop an activity that is locally controlled, but cannot override a command input.
- The DCMIS functions and capabilities include:
  - Status monitoring, alarm of off-normal conditions, and displays and reports for the GROA and adjacent support facilities
  - Video surveillance for the GROA and adjacent support facilities (except security, which is provided in the security locations)
  - Control of utility systems (e.g., water systems, hot water heating and chilled water cooling, and non-ITS heating, ventilation, and air-conditioning)
  - Control of subsurface emplacement operations
  - Event sequence monitoring
  - Data collection and storage, with capability to transmit data off site.

The DCMIS is a distributed control system, which is an integrated system in which consistent control philosophies are utilized, common hardware and software structures are used throughout the system, and data are universally available for use throughout the system. The DCMIS is comprised of functionally and geographically distributed intelligent units, each performing specific tasks and each having access to the system-wide database over a redundant high-speed communications network. The DCMIS provides the Central Control Center and facility operations room operators with control capabilities, status monitoring, alarm and annunciation, displays and reports, video surveillance, postevent monitoring (Section 1.4.2.5), and data collection and storage, with the capability to transmit data offsite.

Description of System and Major Components—The DCMIS includes the following major components:

- Controllers
- Human–machine interface consoles
- Input and output modules
- Engineering workstation
- Historian
- Networks and network interface devices
- Foreign-device interfaces.

Controllers—Controllers process operator and system commands and execute the logic that controls the process or function.

Human–Machine Interface Consoles—The DCMIS human–machine interface consoles are located in the Central Control Center and in the various facility operating rooms. The human–machine interface consoles provide the operator with the ability to control and monitor systems and devices. The human–machine interface consoles provide alarms in response to detection of off-normal events and status indications. Each human–machine interface console is normally assigned to specific facility systems, although any console can be configured to serve as an alternate console.

Closed-circuit television video is provided at each human–machine interface console. Video signals and video control functions are transmitted over a video network provided as part of the communications system. The DCMIS interfaces with the communications system video network to allow video signals to be displayed on the human–machine interface consoles and to allow closed-circuit television video camera control.

The human–machine interface consoles and graphics are designed using the methods and practices of IEEE Std 1289-1998, *IEEE Guide for the Application of Human Factors Engineering in the Design of Computer-Based Monitoring and Control Displays for Nuclear Power Generating Stations*, and IEEE Std 1023-2004, *IEEE Recommended Practice for the Application of Human Factors Engineering to Systems, Equipment, and Facilities of Nuclear Power Generating Stations and Other Nuclear Facilities*.

Input and Output Modules—Input and output modules provide the connection from field devices to the controllers. Various input and output modules are designed to interface with different field devices such as transmitters, valves, and switches.

Engineering Workstation—An engineering workstation is provided to perform engineering configuration work, such as maintaining and updating the system database, operator graphics, controller logic, reports, and logs. The engineering workstation is housed in the engineering configuration room, which is located in the CCCF.

Historian—The historian is a mass storage device that allows collection, storage, archiving, and retrieval of process data.

Networks and Network Interface Devices—The DCMIS network provides the backbone over which the various system components communicate. It is composed of two subnetworks: a control network and a supervisory network. System controllers are connected to each other via the control network. Signals from field devices are brought into the DCMIS network via input and output modules. Signals from field controllers are brought into the DCMIS network through foreign-device interfaces. The input and output modules and foreign-device interfaces communicate with the controllers. The supervisory network provides communication between the human–machine interface consoles, higher-level system components, and other systems through network interfaces. Network connection devices connect the control and supervisory networks, allowing communication between controllers and the higher-level system components.

The design of the DCMIS networks is done using the methods and practices of IEEE Std 802.3ah-2004, *IEEE Standard for Information Technology—Telecommunications and Information Exchange Between Systems—Local and Metropolitan Area Networks—Specific Requirements. Part 3: Carrier Sense Multiple Access with Collision Detection (CSMA/CD) Access Method and Physical Layer Specifications. Amendment: Media Access Control Parameters, Physical Layers, and Management Parameters for Subscriber Access Networks*.

Foreign-Device Interfaces—Foreign-device interfaces provide a link between other systems and the DCMIS control network. Signals from these other systems are brought into the DCMIS through foreign-device interfaces, which, in turn, communicate with the system controllers. This connection enables the DCMIS to communicate with systems via the control network, similar to the way the DCMIS communicates with its own input and output modules. The DCMIS foreign-device interfaces are designed using the methods and practices of IEEE Std 802.3ah-2004.

System Location—Human–machine interface consoles are located in the Central Control Center and in facility operations rooms. The location of the CCCF is shown on Figure 1.2.1-2. The CCCF and its general arrangement are discussed in Section 1.2.8. The engineering workstation is located in the engineering configuration room in the CCCF. Controllers, input and output modules, and foreign-device interfaces are distributed throughout the GROA so that they are in close geographic proximity to the signal sources. Other major components of the system (such as servers, network interface devices, and historian) are located in the Central Control Center.

Redundancy—Reliability and availability of the DCMIS controllers, networks, network connections, processors, human–machine interface consoles, historian, and power supplies are increased by making them redundant. For redundant instrumentation or equipment, the DCMIS utilizes an input and output partitioning design philosophy. This philosophy ensures that no redundant instrumentation or equipment shares common input or output modules.

Reliability and Maintainability—The system components are fully modular and allow online replacement of defective parts under power to the maximum extent possible. The system has built-in test capabilities to perform diagnostics without affecting the system performance. The DCMIS is powered from an uninterruptible power supply to ensure that it can perform monitoring functions during loss of normal power, as discussed in Section 1.4.1. Components of the DCMIS subject to radiation exposure are designed to withstand and operate in the radiation environment in which the component is installed.

System Interfaces—Interface between the DCMIS and the communications system is accomplished through an ethernet connection to the supervisory network. This connection provides access to the repository operations network and offsite communications. Secure routers or firewalls provided by the communications system ensure that only authorized personnel have access to the DCMIS.

The overall architecture for the digital control and monitoring information system is shown on Figure 1.4.2-1. Figure 1.4.2-2 shows the DCMIS block diagram, which reflects the DCMIS interfaces with the various GROA systems, such as the radiation/radiological monitoring system, environmental/meteorological monitoring system, and the postevent monitoring capability.

1.4.2.1.2 Operational Processes

The DCMIS is the common control platform for the GROA and adjacent support facilities. As such, the system is used in most of the operational processes. The DCMIS is programmed and configured specifically for each facility process it controls. The system controls, monitors, and displays graphics in the facility operations rooms and in the Central Control Center for the facility systems that are served by the DCMIS.

The DCMIS operates so that basic control functions are executed at the controller, input, and output levels without being transmitted through the entire system for analysis. This allows the control loop of a system to remain operational should there be a network failure.

Human–machine interface consoles have software specifically designed to interface with facility system controls. Password protection is provided to restrict access to control and monitoring of certain processes or equipment.

Process analog inputs can be trended and displayed on the monitors. The design of the presentation of alarms, messages, and indications is done using the methods and practices of guidelines contained in IEEE Std 1289-1998; ISA-18.1-1979, *Annunciator Sequences and Specification*, as applied in Appendix A.5; and applicable sections of NUREG-0700 (O'Hara et al. 2002).

1.4.2.1.3 Design Codes and Standards

Digital Control and Management Information System—The codes and standards applicable to the DCMIS are listed below:

- IEEE Std 802.3ah-2004, *IEEE Standard for Information Technology—Telecommunications and Information Exchange Between Systems—Local and Metropolitan Area Networks—Specific Requirements. Part 3: Carrier Sense Multiple Access with Collision Detection (CSMA/CD) Access Method and Physical Layer Specifications. Amendment: Media Access Control Parameters, Physical Layers, and Management Parameters for Subscriber Access Networks*

- IEEE Std 1023-2004, *IEEE Recommended Practice for the Application of Human Factors Engineering to Systems, Equipment, and Facilities of Nuclear Power Generating Stations and Other Nuclear Facilities*

- IEEE Std 1100-2005, *IEEE Recommended Practice for Powering and Grounding Electronic Equipment*

- IEEE 1289-1998, *IEEE Guide for the Application of Human Factors Engineering in the Design of Computer-Based Monitoring and Control Displays for Nuclear Power Generating Stations*.

1.4.2.2 Radiation/Radiological Monitoring

[NUREG-1804, Section 2.1.1.2.3: AC 1(2), (3), (4), AC 2, AC 3, AC 6; Section 2.1.1.6.3: AC 1(1), (2)(g), (j); Section 2.1.1.7.3.1: AC 1 (7)]

1.4.2.2.1 System Description

The radiation/radiological monitoring system is non-ITS.

Function—The radiation/radiological monitoring system monitors surface and subsurface areas and effluents from the GROA release points. The system is designed to function during the preclosure period, including the postemplacement ventilation period through closure. The radiation/radiological monitoring system operates on a continuous basis providing real-time radiological information. Radiation monitors provide local indication, as well as visual and audible alarms, when setpoint levels are exceeded. The status and alarms are also available remotely through the DCMIS. Real-time and historical information can be viewed, reported, and trended using the DCMIS. The information is displayed on the radiation/environmental/postevent monitoring and performance confirmation human–machine interface console in the Central Control Center and on appropriate consoles in the facility operations rooms. The information is also provided by the DCMIS to the emergency response facilities.

The monitoring equipment alerts operators to Category 1 or Category 2 event sequences or off-normal conditions such as radiological releases or extreme radiation. The radiation/radiological monitoring system is not credited with alerting the operator to take manual actions in response to an event sequence.

The radiation/radiological monitoring system functional block diagram is shown in Figure 1.4.2-3.

Description of System and Major Components—The radiation/radiological monitoring system includes the following major components:

- Area radiation monitors
- Continuous air monitors
- Airborne radioactivity effluent monitors.

The area radiation monitors, continuous air monitors, and airborne radioactivity effluent monitors provide local display and alarms as well as supply data and status information to the DCMIS for remote data display, storage, reporting, trending, and alarming. Data are available through the DCMIS for use in operations, radiological dispersion models, and emergency management. Status and alarm information from the radiation monitors positioned throughout the GROA is communicated to the Central Control Center through a DCMIS human–machine interface console;

information for each facility is provided to a console in the facility operations room. The radiation/radiological monitoring system is powered from an uninterruptible power supply. Area radiation, continuous air, and effluent monitors are periodically tested and calibrated using the methods and practices of ANSI/ANS-HPSSC-6.8.1-1981, *Location and Design Criteria for Area Radiation Monitoring Systems for Light Water Nuclear Reactors* and ANSI N42.18-2004.

Area Radiation Monitors—The area radiation monitors are located throughout the surface areas. Area radiation monitors are not required for the subsurface, because adequate administrative controls will be imposed where entry to high radiation areas is required. The location and design of the area radiation monitors use the methods and practices of ANSI/ANS-HPSSC-6.8.1-1981.

Continuous Air Monitors—The performance requirements for the continuous air monitors use the methods and practices of ANSI N42.17B-1989, *American National Standard, Performance Specifications for Health Physics Instrumentation—Occupational Airborne Radioactivity Monitoring Instrumentation*. Continuous air monitors are located throughout the surface facilities and subsurface waste emplacement area, including the access main and intake shifts. The instruments sample the air and collect airborne contaminants on a filter medium.

Airborne Radioactivity Effluent Monitors—Airborne radioactivity effluent monitors determine whether airborne effluent releases are within established regulatory limits and provide release information for use in emergency response dose projections. The sampled air is continuously monitored for radioactivity by monitors located in designated exhaust stacks in the handling facilities. Air from the subsurface exhaust is continuously sampled on filters for periodic measurements. Air sampling is performed using the methods and practices of ANSI/HPS N13.1-1999, *American National Standard Sampling and Monitoring Releases of Airborne Radioactive Substances from the Stacks and Ducts of Nuclear Facilities*. The performance requirements for the airborne effluent monitors use the methods and practices of ANSI N42.18-2004, *American National Standard, Specification and Performance of On-Site Instrumentation for Continuously Monitoring Radioactivity in Effluents*. At each of the surface effluent points, airborne radioactivity effluent monitors sample the effluent stream for airborne radioactivity particulate and gases. Continuous samplers on the subsurface ventilation exhaust shafts will remain in operation following the emplacement period until closure.

1.4.2.2.2 Design Codes and Standards

The codes and standards applicable to the radiation/radiological monitoring system are listed below:

- ANSI N42.17B-1989, *American National Standard, Performance Specifications for Health Physics Instrumentation—Occupational Airborne Radioactivity Monitoring Instrumentation*
- ANSI N42.18-2004, *American National Standard, Specification and Performance of On-Site Instrumentation for Continuously Monitoring Radioactivity in Effluents*

- ANSI/ANS-HPSSC-6.8.1-1981, *Location and Design Criteria for Area Radiation Monitoring Systems for Light Water Nuclear Reactors*

- ANSI/HPS N13.1-1999, *American National Standard Sampling and Monitoring Releases of Airborne Radioactive Substances from the Stacks and Ducts of Nuclear Facilities*.

1.4.2.3 Environmental/Meteorological Monitoring System

[NUREG-1804, Section 2.1.1.2.3: AC 1(2), (3), (4), AC 2, AC 3, AC 6]

1.4.2.3.1 System Description

The environmental/meteorological monitoring system is categorized as non-ITS.

Function—The function of the environmental/meteorological monitoring system is to monitor seismic and meteorological parameters to support repository operations during the preclosure period, including the postemplacement period through to closure. The environmental/meteorological monitoring system is designed to perform monitoring, alarm, data logging, trending, data storage, and data retrieval functions. The environmental/meteorological monitoring system does not perform any control functions. Meteorological and seismic data are also transmitted to the DCMIS. The Environmental Radiological Monitoring Program is discussed in Section 5.11.3.

The environmental/meteorological monitoring system supports GROA and adjacent support facilities operations by monitoring seismic and meteorological parameters. Seismic parameters are monitored for both surface and subsurface areas.

The environmental/meteorological monitoring system is provided with solar panels with backup batteries for remotely located equipment and power from an uninterruptible power system for other equipment associated with the system.

The instrumentation associated with these subsystems acquires the required data and transmits the data to the DCMIS for display on the radiation/environmental/postevent monitoring and performance confirmation human–machine interface console in the Central Control Center.

Figure 1.4.2-4 shows the environmental/meteorological monitoring system functional block diagram, which depicts the major components associated with the environmental/meteorological monitoring system.

Seismic Monitoring Subsystem—The seismic monitoring subsystem consists of accelerometers for surface and subsurface monitoring and seismic motion analysis equipment. Accelerometers monitor vertical and horizontal ground movement. Solid-state digital instrumentation provides continuous processing of data. The seismic monitoring subsystem interfaces with the DCMIS to provide audible and visual alarm indication of off-normal conditions.

The accelerometers are hardwired to the seismic motion analysis equipment, which consists of a data logger and a server. The data are analyzed, conditioned, and transmitted to the DCMIS for display on the radiation/environmental/postevent monitoring and performance confirmation

human–machine interface console in the Central Control Center. Information displayed includes peak vertical and horizontal acceleration, peak velocity, response spectra, acceleration time histories, and graphics showing sensor location. The DCMIS has the capability of archiving and retrieving this information.

The accelerometers are located in areas on the surface and subsurface, generally at the foundation level and at elevation; instruments are not located on equipment, piping, or supports. The seismic monitoring system design is developed using the methods and practices of applicable guidance in Regulatory Guide 1.12, *Nuclear Power Plant Instrumentation for Earthquakes*, with the following clarifications (references are to Section C—Regulatory Position in Regulatory Guide 1.12):

C 1.1—Solid-state digital instrumentation enables the processing of data at the GROA within 4 hours of the seismic event. The data recording and analysis equipment is located in handling facilities designed to the design basis ground motion (DBGM)–2 seismic response spectra and installed/mounted to withstand the DBGM-2 earthquake.

C 1.2—Triaxial time-history accelerographs are provided as follows:

1. Free-field

2. Foundations of the Initial Handling Facility (IHF), Canister Receipt and Closure Facility (CRCF) 1, and Wet Handling Facility (WHF)

3. One elevation (excluding the foundation) in each of the IHF, CRCF 1, and WHF

4. Foundations of the Receipt Facility (RF), Emergency Diesel Generator Facility, CRCF 2, and CRCF 3, unless the responses of those facilities have been shown to be similar to another monitored facility

5. One elevation (excluding the foundation) of the RF, Emergency Diesel Generator Facility, CRCF 2, and CRCF 3, unless the responses of those facilities have been shown to be similar to another monitored facility

6. Subsurface location(s), as needed, to measure subsurface responses.

As each handling facility is placed in operation, the accelerographs for those facilities will be operational and provide input to the recording and analysis equipment. Similarly, accelerographs for the subsurface facilities will be incrementally placed into operation as the emplacement drifts are developed and placed into operations.

C 2—Annunciation is provided in each waste handling facility operations room (IHF, CRCFs, RF, and WHF) and in the Central Control Center.

C 3—The seismic instrumentation is normally operating during waste handling operations. Maintenance and repair procedures provide for keeping the appropriate number of instruments in service. The seismic instrumentation is designed for continuous operation, with high reliability and low mean-time-to-repair times.

C 4—The Yucca Mountain Project complies with regulatory positions 4.1 through 4.5 with this clarification to position C 4.4: "...at a minimum, 30 seconds of low-amplitude motion prior to seismic trigger actuation...".

C 4.6—The seismic monitoring system's uninterruptible power supply is sufficient to power the system to sense and record a minimum of 25 minutes at any time over a 24-hour period without recharging. The seismic monitoring system's uninterruptible power supply is connected to an uninterruptible power supply.

C 4.7.1—The dynamic range is 1,000:1 zero-to-peak, or greater, with a minimum of 0.001 to 1.0 g. The actual range will be determined for each accelerometer location and will be sufficient to measure 1.2 times the DBGM-2 acceleration or 1.0 g, whichever is higher.

C 7—Triggering of the free-field or any foundation-level time-history accelerograph is annunciated in each waste handling facility operations room (IHF, CRCFs, RF, and WHF) and in the Central Control Center.

C 8.2—Channel calibration is performed at an interval not to exceed 18 months.

Meteorological Monitoring Subsystem—The meteorological monitoring subsystem consists of meteorological instruments, data loggers, radio frequency transceivers, and the meteorological server. Four meteorological towers (1, 2, 4, and 9) are instrumented to provide meteorological data for repository operations. The location and instrumentation on each are shown in Figure 1.1-12 and Table 1.4.2-2. The meteorological subsystem instrumentation monitors wind speed, wind direction, temperature, relative humidity, barometric pressure, solar radiation, and precipitation. The meteorological monitoring subsystem operates on a continuous basis, providing real-time meteorological information that can be viewed, stored, and retrieved on demand. The subsystem interfaces with the DCMIS, where the monitored information is displayed on the radiation/environmental/postevent monitoring and performance confirmation human–machine interface console in the Central Control Center. Meteorological monitoring information is provided for use in postevent release dose projection estimates by the DCMIS.

At each tower, the meteorological instruments are hardwired to a data logger. Data from the data logger are transmitted to the meteorological server using transceivers. The server interfaces with the DCMIS, enabling data to be displayed on the radiation/environmental/postevent monitoring and performance confirmation human–machine interface console.

Precipitation monitoring for performance confirmation and environmental monitoring is discussed in Section 4.2.1.1.

The meteorological subsystem is designed using the methods and practices of ANSI/ANS-3.11-2005, *American National Standard for Determining Meteorological Information at Nuclear Facilities*, and in accordance with Regulatory Guide 1.23, *Meteorological Monitoring Programs for Nuclear Power Plants*, as clarified below.

The meteorological monitoring subsystem meets the regulatory positions of Regulatory Guide 1.23 with one exception from Section 2.3 of Regulatory Guide 1.23. The ambient temperature

measurement is made at 2 m above ground level, rather than 10 m. The temperature measurement at 2 m is made to best meet climatology characterization and design requirements. Because the vertical temperature difference between 2 and 10 m above ground level is also measured, the temperature at 10 m can be readily derived from routine data output.

1.4.2.3.2 Operational Processes

The environmental/meteorological monitoring system operates on a continuous basis, providing real-time meteorological and seismic information that can be viewed, stored, and retrieved on demand. The system is designed to perform monitoring, indicating, trending, and alarm functions. There are no control functions associated with this system.

1.4.2.3.3 Design Codes and Standards

The standard applicable to the meteorological monitoring subsystem is ANSI/ANS-3.11-2005, *American National Standard for Determining Meteorological Information at Nuclear Facilities*.

1.4.2.4 Communications

[NUREG 1804, Section 2.1.1.2.3: AC 1, (2), (3), (4), AC 2, AC 3, AC 6]

1.4.2.4.1 System Description

The communications system is categorized as non-ITS.

Function—The communications system provides the infrastructure for video, voice, and data communications for the surface and the subsurface in support of monitoring and control, transfer, processing, transportation, emplacement, and retrieval of spent nuclear fuel (SNF) and high-level radioactive waste (HLW) during the preclosure period, including the postemplacement period through closure.

Description of System and Major Components—The communications system provides communication services for data, voice, and video transmissions throughout the GROA and adjacent support facilities. Figure 1.4.2-5 shows a functional block diagram of the various communication services provided on the surface and to the subsurface, over both wired and wireless media.

The communications system provides reliable communications during both normal and emergency conditions. The communications system supports safeguards and security, fire protection, environmental, safety, and health (ES&H), construction, operations, and emergency management. The communications system enables tracking of the transportation casks in transit to the repository. The communications system transports voice, video, and data information to designated offsite locations in a secure manner.

The communications system is divided into several secured networks. These networks include the operations network, the safeguards and security networks, the site administrative network, the ES&H network, the utility network, and the site telephone network. Figure 1.4.2-6 shows the network architecture. The network communication is internet protocol compliant, thus ensuring

expansion and interoperability while avoiding obsolescence, using the methods and practices of IEEE Std 802.3ah-2004. Communication services are configured, monitored, maintained, and managed through a network operations center. Wireless communications meet Federal Communications Commission electromagnetic compatibility standards to prevent interference with radio frequency communications within and external to the communications system in accordance with 47 CFR Part 15. The communications system is supplied from an uninterruptible power supply.

The communications system consists of the following five subsystems:

- The data subsystem
- The video subsystem
- The voice subsystem
- The network subsystem
- The transport subsystem.

Figure 1.4.2-7 illustrates the functional organization of these subsystems.

1.4.2.4.1.1 Data Subsystem

The data subsystem transports two-way data between source and destination. This subsystem transports TEV control and monitoring information to the DCMIS, fire alarms and sirens between the fire control center and alarm stations throughout the GROA and adjacent support facilities and administrative and ES&H communications. Data are passed between the communications system and the external devices via an ethernet connection using the methods and practices of IEEE Std 802.3ah-2004.

1.4.2.4.1.2 Video Subsystem

The video subsystem transports digitally encoded images between source and destination via a video network. This subsystem transports high-resolution image information from video cameras and the controls for those cameras to and from the DCMIS during SNF and HLW transfer, handling, transportation, emplacement, or retrieval operations. This subsystem also transports medium-resolution image information from portable video cameras carried by fire and rescue personnel to the fire control center and Technical Support Center.

The video subsystem for fire and rescue operations and SNF and HLW monitoring is designed using the methods and practices of Motion Picture Experts Group international standards.

Video information is accepted from cameras via analog connections using the methods and practices of SMPTE 170M-2004, *SMPTE Standard for Television—Composite Analog Video Signal—NTSC for Studio Applications*. Digitized image information is passed between the video network on the communications system and the encoders or decoders via an ethernet connection using the methods and practices of IEEE Std 802.3ah-2004.

1.4.2.4.1.3 Voice Subsystem

The voice subsystem transports two-way voice information between source and destination. This subsystem supports the repository surface and subsurface wired and wireless telephone system, the public address system, and the portable, mobile two-way radio system. The private branch exchange Voice over Internet Protocol gateway is the central exchange for telephone traffic and interconnects to conventional T-1 telephone trunk lines for access to the offsite public network using the methods and practices of ITU-T Rec. G.703, *Physical/Electrical Characteristics of Hierarchical Digital Interfaces—Series G: Transmission Systems and Media, Digital Systems and Networks Digital Terminal Equipments—General*.

Wired telephone service is supplied for the surface and the subsurface, whereas wireless telephone service is supplied only for the subsurface. Wired and wireless telephones operate through a two-way Voice over Internet Protocol connection and are internet compliant using the methods and practices of RFC 3344, *IP Mobility Support for IPv4* (Perkins 2002); RFC 2474, *Definition of the Differentiated Services Field (DS Field) in the IPv4 and IPv6 Headers* (Nichols et al. 1998); RFC 3260, *New Terminology and Clarifications for Diffserv* (Grossman 2002); and RFC 3261, *SIP: Session Initiation Protocol* (Rosenberg et al. 2002). In addition, wireless telephones use the methods and practices of IEEE Std 802.11b-1999, *Supplement to IEEE Standard for Information Technology—Telecommunications and Information Exchange Between Systems—Local and Metropolitan Networks—Specific Requirements—Part 11: Wireless LAN Medium Access Control (MAC) and Physical Layer (PHY) Specifications: Higher Speed Physical Layer Extension in the 2.4 GHz Band*.

1.4.2.4.1.4 Network Subsystem

The network subsystem interconnects the users of the communications system, irrespective of their location. Data, digital voice, and digital video information are carried over the network subsystem. The information carried over the operations, safeguards and security, administrative, ES&H, utility, and site telephone networks, as well as information transferred off site, travels over the network subsystem.

Firewalls and other protection/isolation devices are used to isolate the networks and prevent unauthorized actions from internal and external sources. The firewalls that secure and isolate information reside on the network subsystem.

The network management system permits monitoring of the network subsystem from the network operations center to assess performance, diagnose failures, and aid maintenance and repair actions using the methods and practices of RFC 1155, *Structure and Identification of Management Information for TCP/IP-Based Internets* (Rose and McCloghrie 1990).

1.4.2.4.1.5 Transport Subsystem

Information carried by the communications system travels over a common, robust transport subsystem. This subsystem consists of four major components: wired, wireless, radiating cable, and the synchronous optical network backbone.

The wired component is the fiber-optic and copper cabling that connects physical devices.

The wireless components are the transceivers and antennas that convert information from wired to wireless to enable two-way wireless communications.

The radiating cable is a coaxial cable antenna that radiates the radio frequency signal between transceivers and the waste package TEV for data and video information carried over the network subsystem using the methods and practices of IEEE Std 802.11g/D6.1, *Draft Supplement to Standard for Information Technology—Telecommunications and Information Exchange Between Systems—Local and Metropolitan Area Networks—Specific Requirements—Part 11: Wireless LAN Medium Access Control (MAC) and Physical Layer (PHY) Specifications: Further Higher-Speed Physical Layer Extension in the 2.4 GHz Band*. The radiating cable also transports the voice signals between base stations and mobile and portable radios for the ES&H two-way radio system and radiates the voice signals for the subsurface wireless telephone service.

The synchronous optical network is the physical and electrical backbone consisting of access nodes by which information is converted to light waves that travel over fiber-optic cabling. These nodes are configured in a redundant dual-ring topology that protects against an outage by a cut in the fiber-optic cable and protects against failure of a synchronous optical network node—so there is no interruption of any of the data, voice, or video services carried over this backbone—using the methods and practices of T1.105-2001, *Synchronous Optical Network (SONET)—Basic Description Including Multiplex Structure, Rates, and Formats*, including Supplement T1.105a-2002.

1.4.2.4.1.6 Security

Security on the network subsystem is exercised through firewalls, secure internet protocol, and encryption. Traffic on the operations network and the safeguards and security network is secured at the network layer with secure internet protocol using the methods and practices of RFC 2401, *Security Architecture for the Internet Protocol* (Kent and Atkinson 1998). The traffic traversing the connection between the onsite administrative network and offsite support facilities is also secured at the network layer using a secure internet protocol using the methods and practices of RFC 2401 (Kent and Atkinson 1998).

Firewalls between the networks and the public, as shown in Figure 1.4.2-6, provide protection against unauthorized access and are designed using the methods and practices of RFC 2979, *Behavior of and Requirements for Internet Firewalls* (Freed 2000). In addition, designated applications on the various networks and satellite links are encrypted using the methods and practices of NIST Special Publication 800-21 (Lee 1999).

1.4.2.4.1.7 Facilities

Surface Facilities—The communications system for the surface facilities, including the synchronous optical network backbone and its interconnects, enables surface-to-surface and surface-to-subsurface communications. The communications site topology is shown in Figure 1.4.2-8. As shown in Figure 1.4.2-8, the surface facilities, which include buildings in the GROA and the balance of plant, are connected via a dual-ring that serves as the physical transport

media for the synchronous optical network communication backbone. The dual-ring for the surface facilities is physically separate and independent of the dual-ring that serves the subsurface facilities.

Figure 1.4.2-6 shows the unidirectional satellite uplink terminal that combines and transmits video, data, and voice into a single encrypted transport stream that is received and decoded in the satellite downlink terminals, both on and off site.

Subsurface Facilities—The communications system for the subsurface facilities contains wireless interconnection with the synchronous optical network backbone, enabling communication by surface facilities with the TEV.

The site topology, including the subsurface backbone topology, is shown in Figure 1.4.2-8. Synchronous optical network nodes are installed in several electrical equipment alcoves positioned along the access mains, and they interface with various radio frequency transceivers collocated in the same alcoves. Figure 1.4.2-9 shows the subsurface wireless configuration for the access main and emplacement drifts. Radiating cable is placed only in the access mains and air intake shafts to minimize exposure to radiation and high temperatures in the emplacement drifts.

1.4.2.4.1.8 System Interfaces

The communications system interfaces with many repository systems. Figure 1.4.2-10 shows the boundaries and interfaces in a common diagram. The diagram relates each interface with the services carried over this interface, such as telephone, video, mobile radio, and controls. External connections are via conventional transmission protocols.

1.4.2.4.2 Communications Processes

1.4.2.4.2.1 Communications with Transport and Emplacement Vehicle

Communication is provided between the DCMIS on the surface and the TEV in the subsurface through the protected, redundant, synchronous, optical backbone network. Operations traffic passes through routers that direct the control information to the proper set of redundant radio frequency transceivers that communicate with the TEV.

1.4.2.4.2.2 Emergency Communications

Emergency communications for the GROA and adjacent support facilities support the emergency plan. The architecture for emergency management communications provided by the communications system is illustrated in Figure 1.4.2-11. Two-way portable and mobile radio communications on the surface are provided for safeguards and security, fire protection, rescue, medical service, and environmental and radiation emergency service personnel. Telephone communications are available on the entire site for operations, maintenance, and administration, with redundant private branch exchange/Voice over Internet Protocol gateways and trunk-line connections to the offsite public telephone system.

Trunk lines from the Technical Support Center or backup Technical Support Center to the Emergency Operations Facility in Las Vegas are sized to transmit voice communications and other information, such as data and low-resolution video. Information is available to the U.S. Nuclear Regulatory Commission (NRC) via redundant communication links. The rooms designated as the NRC consultation room in the CCCF (primary Technical Support Center) and the Administration Facility (backup Emergency Operations Facility/Technical Support Center) are provided with the communications capabilities described in Section 2 of NUREG-0696 (NRC 1981). Notification of offsite organizations is addressed in Section 5.7.

1.4.2.4.3 Design Codes and Standards

The codes and standards applicable to the communications system are listed below:

- ITU-T Rec. G.711, *General Aspects of Digital Transmission Systems, Terminal Equipments, Pulse Code Modulation (PCM) of Voice Frequencies*

- ITU-T Rec. G.703, *Physical/Electrical Characteristics of Hierarchical Digital Interfaces—Series G: Transmission Systems and Media, Digital Systems and Networks Digital Terminal Equipments—General*

- RFC 2979, *Behavior of and Requirements for Internet Firewalls* (Freed 2000)

- RFC 3260, *New Terminology and Clarifications for Diffserv* (Grossman 2002)

- IEEE Std 802.11b-1999, *Supplement to IEEE Standard for Information Technology—Telecommunications and Information Exchange Between Systems—Local and Metropolitan Networks—Specific Requirements—Part 11: Wireless LAN Medium Access Control (MAC) and Physical Layer (PHY) Specifications: Higher Speed Physical Layer Extension in the 2.4 GHz Band*

- IEEE Std 802.11g/D6.1, *Draft Supplement to Standard for Information Technology—Telecommunications and Information Exchange Between Systems—Local and Metropolitan Area Networks—Specific Requirements—Part 11: Wireless LAN Medium Access Control (MAC) and Physical Layer (PHY) Specifications: Further Higher-Speed Physical Layer Extension in the 2.4 GHz Band*

- IEEE Std 802.3ah-2004, *IEEE Standard for Information Technology—Telecommunications and Information Exchange Between Systems—Local and Metropolitan Area Networks—Specific Requirements. Part 3: Carrier Sense Multiple Access with Collision Detection (CSMA/CD) Access Method and Physical Layer Specifications. Amendment: Media Access Control Parameters, Physical Layers, and Management Parameters for Subscriber Access Networks*

- RFC 2401, *Security Architecture for the Internet Protocol* (Kent and Atkinson 1998)

- NIST Special Publication 800-21, *Guideline for Implementing Cryptography in the Federal Government* (Lee 1999)

- RFC 2474, *Definition of the Differentiated Services Field (DS Field) in the IPv4 and IPv6 Headers* (Nichols et al. 1998)
- RFC 3344, *IP Mobility Support for IPv4* (Perkins 2002)
- RFC 1155, *Structure and Identification of Management Information for TCP/IP-Based Internets* (Rose and McCloghrie 1990)
- RFC 3261, *SIP: Session Initiation Protocol* (Rosenberg et al. 2002)
- SMPTE 170M-2004, *SMPTE Standard for Television—Composite Analog Video Signal—NTSC for Studio Applications*
- T1.105-2001, *Synchronous Optical Network (SONET)—Basic Description Including Multiplex Structure, Rates, and Formats*, including Supplement T1.105a-2002
- TIA 2003, *Project 25—The TIA-Published 102 Series Documents*.

1.4.2.5 Postevent Monitoring

[NUREG 1804, Section 2.1.1.2.3: AC 2(1), (2), (3)]

1.4.2.5.1 Description

A set of parameters to be monitored after an event has been developed based upon the potential events that could cause a release of radioactive material or excessive radiation exposure to personnel. The set of parameters is displayed on predetermined human–machine interface consoles using the DCMIS and is available in each of the facilities, the Central Control Center, and the designated emergency response facilities. The selected parameters were identified using the methods and practices of IEEE Std 497-2002, *IEEE Standard Criteria for Accident Monitoring Instrumentation for Nuclear Power Generating Stations*. Table 1.4.2-3 presents selected variables of this set of parameters. The displays of these variables provide information useful to the emergency response team in recognizing, classifying, verifying mitigative functions, and developing recovery actions after an event.

1.4.2.5.2 Operational Processes

Operations postevent will be performed using approved emergency and off-normal operating procedures. The displays of the postevent monitoring variables will be developed to coordinate with these procedures. The initial event categorization and communications following an event occur in the CCCF.

1.4.2.5.3 Design Codes and Standards

The design codes and standards applicable to the systems that provide inputs for postevent monitoring are presented in the sections presenting information regarding each system. The development of the set of parameters considered appropriate for postevent monitoring at the GROA has been performed using the methods and practices of IEEE Std 497-2002.

1.4.2.6 General References

ANSI N42.17B-1989. 2005. *American National Standard, Performance Specifications for Health Physics Instrumentation—Occupational Airborne Radioactivity Monitoring Instrumentation*. New York, New York: Institute of Electrical and Electronics Engineers. TIC: 258573.

ANSI N42.18-2004. *American National Standard, Specification and Performance of On-Site Instrumentation for Continuously Monitoring Radioactivity in Effluents.* New York, New York: Institute of Electrical and Electronics Engineers. TIC: 258574.

ANSI/ANS-3.11-2005. *American National Standard for Determining Meteorological Information at Nuclear Facilities.* La Grange Park, Illinois: American Nuclear Society. TIC: 258445.

ANSI/ANS-HPSSC-6.8.1-1981. *Location and Design Criteria for Area Radiation Monitoring Systems for Light Water Nuclear Reactors.* La Grange Park, Illinois: American Nuclear Society. TIC: 253112.

ANSI/HPS N13.1-1999. *American National Standard Sampling and Monitoring Releases of Airborne Radioactive Substances from the Stacks and Ducts of Nuclear Facilities*. McLean, Virginia: Health Physics Society. TIC: 248835.

ASME NOG-1-2004. 2005. *Rules for Construction of Overhead and Gantry Cranes (Top Running Bridge, Multiple Girder).* New York, New York: American Society of Mechanical Engineers. TIC: 257672.

Freed, N. 2000. *Behavior of and Requirements for Internet Firewalls.* RFC 2979. Reston, Virginia: Internet Society. TIC: 255477.

Grossman, D. 2002. *New Terminology and Clarifications for Diffserv.* RFC 3260. Reston, Virginia: Internet Society. TIC: 255482.

IEEE Std 497-2002. *IEEE Standard Criteria for Accident Monitoring Instrumentation for Nuclear Power Generating Stations*. New York, New York: Institute of Electrical and Electronics Engineers. TIC: 258752.

IEEE Std 802.3ah-2004. *IEEE Standard for Information Technology—Telecommunications and Information Exchange Between Systems—Local and Metropolitan Area Networks—Specific Requirements. Part 3: Carrier Sense Multiple Access with Collision Detection (CSMA/CD) Access Method and Physical Layer Specifications. Amendment: Media Access Control Parameters, Physical Layers, and Management Parameters for Subscriber Access Networks*. New York, New York: Institute of Electrical and Electronics Engineers. TIC: 257033.

IEEE Std 802.11b-1999. 2000. *Supplement to IEEE Standard for Information Technology—Telecommunications and Information Exchange Between Systems—Local and Metropolitan Networks—Specific Requirements—Part 11: Wireless LAN Medium Access Control (MAC) and Physical Layer (PHY) Specifications: Higher Speed Physical Layer Extension in the 2.4 GHz Band*. New York, New York: Institute of Electrical and Electronics Engineers. TIC: 254758.

IEEE Std 802.11g/D6.1. 2003. *Draft Supplement to Standard for Information Technology—Telecommunications and Information Exchange Between Systems—Local and Metropolitan Area Networks—Specific Requirements—Part 11: Wireless LAN Medium Access Control (MAC) and Physical Layer (PHY) Specifications: Further Higher-Speed Physical Layer Extension in the 2.4 GHz Band*. New York, New York: Institute of Electrical and Electronics Engineers. TIC: 254396.

IEEE Std 1023-2004. 2005. *IEEE Recommended Practice for the Application of Human Factors Engineering to Systems, Equipment, and Facilities of Nuclear Power Generating Stations and Other Nuclear Facilities.* New York, New York: Institute of Electrical and Electronics Engineers. TIC: 258591.

IEEE Std 1100-2005. 2006. *IEEE Recommended Practice for Powering and Grounding Electronic Equipment.* New York, New York: Institute of Electrical and Electronics Engineers. TIC: 258683.

IEEE Std 1289-1998. 2005. *IEEE Guide for the Application of Human Factors Engineering in the Design of Computer-Based Monitoring and Control Displays for Nuclear Power Generating Stations*. New York, New York: Institute of Electrical and Electronics Engineers. TIC: 258586.

ISA-18.1-1979. 2004. *Annunciator Sequences and Specification*. Research Triangle Park, North Carolina: Instrumentation, Systems, and Automation Society. TIC: 256621.

ITU-T Recommendation G.703. 2005. *Physical/Electrical Characteristics of Hierarchical Digital Interfaces—Series G: Transmission Systems and Media, Digital Systems and Networks Digital Terminal Equipments—General*. Geneva, Switzerland: International Telecommunication Union. TIC: 259269.

ITU-T Rec. G.711. 1993. *General Aspects of Digital Transmission Systems, Terminal Equipments, Pulse Code Modulation (PCM) of Voice Frequencies*. Geneva, Switzerland: International Telecommunication Union. TIC: 255173.

Kent, S. and Atkinson, R. 1998. *Security Architecture for the Internet Protocol*. RFC 2401. Reston, Virginia: Internet Society. TIC: 255476.

Lee, A. 1999. *Guideline for Implementing Cryptography in the Federal Government.* NIST Special Publication 800-21. Gaithersburg, Maryland: U.S. Department of Commerce, National Institute of Standards and Technology. ACC: MOL.20040305.0180.

Nichols, K.; Blake, S.; Baker, F.; and Black, D. 1998. *Definition of the Differentiated Services Field (DS Field) in the IPv4 and IPv6 Headers.* RFC 2474. Reston, Virginia: Internet Society. TIC: 255485.

NRC (U.S. Nuclear Regulatory Commission) 1981. *Functional Criteria for Emergency Response Facilities, Final Report*. NUREG-0696. Washington, D.C.: U.S. Nuclear Regulatory Commission. TIC: 102319.

O'Hara, J.M.; Brown, W.S.; Lewis, P.M.; and Persensky, J.J. 2002. *Human-System Interface Design Review Guidelines*. NUREG-0700, Rev. 2. Washington, D.C.: U.S. Nuclear Regulatory Commission, Office of Nuclear Regulatory Research. ACC: MOL.20040816.0036.

Perkins, C. 2002. *IP Mobility Support for IPv4.* RFC 3344. Reston, Virginia: Internet Society. TIC: 254957.

Regulatory Guide 1.12, Rev. 2. 1997. *Nuclear Power Plant Instrumentation for Earthquakes.* Washington, D.C.: U.S. Nuclear Regulatory Commission. TIC: 238335.

Regulatory Guide 1.23, Rev. 1. 2007. *Meteorological Monitoring Programs for Nuclear Power Plants.* Washington, D.C.: U.S. Nuclear Regulatory Commission. ACC: MOL.20070926.0187.

Rose, M. and McCloghrie, K. 1990. *Structure and Identification of Management Information for TCP/IP-Based Internets.* RFC 1155. Reston, Virginia: Internet Society. TIC: 255475.

Rosenberg, J.; Schulzrinne, H.; Camarillo, G.; Johnston, A.; Peterson, J.; Sparks, R.; Handley, M.; and Schooler, E. 2002. *SIP: Session Initiation Protocol.* RFC 3261. Reston, Virginia: Internet Society. TIC: 254958.

SMPTE 170M-2004. *SMPTE Standard for Television—Composite Analog Video Signal—NTSC for Studio Applications.* White Plains, New York: Society of Motion Picture and Television Engineers. TIC: 258743.

T1.105-2001. 2002. *Synchronous Optical Network (SONET)—Basic Description Including Multiplex Structure, Rates, and Formats*, including Supplement T1.105a-2002. Washington, D.C.: Alliance for Telecommunications Industry Solutions. TIC: 254657.

TIA (Telecommunications Industry Association) 2003. *Project 25—The TIA-Published 102 Series Documents.* Arlington, Virginia: Telecommunications Industry Association. TIC: 255898.

INTENTIONALLY LEFT BLANK

Table 1.4.2-1. ITS Controls

ITS SSC	Safety Function Implemented through ITS Controls	Section Presenting ITS Controls
Equipment Shield Door	Protect against inadvertent direct exposure of personnel to radiation Mitigate the consequences of radionuclide release (CRCF cask unloading room shield doors)	1.2.3 1.2.4 1.2.6
Port Slide Gate – Single	Protect against inadvertent direct exposure of personnel to radiation Maintain DOE SNF canister separation (CRCF transportation, aging and disposal canister slide gate)	1.2.4
Port Slide Gate – Double	Protect against inadvertent direct exposure of personnel to radiation Preclude canister drop onto floor (CRCF and IHF waste package port) Maintain DOE SNF canister separation (CRCF cask and waste package ports)	1.2.4
Personnel Access and Shield Door	Protect against inadvertent direct exposure of personnel to radiation (CRCF and IHF)	1.2.4
Equipment Confinement Door – Double	Mitigate the consequences of radionuclide release (CRCF)	1.2.4
Waste Package Transfer Trolley	Protect against spurious movement	1.2.4
Cask Preparation Crane	Protect against drop (IHF)	1.2.3
Cask Handling Crane	Protect against drop Limit drop height	1.2.4 1.2.5
Cask Handling Yoke	Protect against drop	1.2.4
Pool Cask Handling Yoke	Protect against drop (WHF)	1.2.5
Cask Lid Lifting Grapple	Protect against drop (CRCF and RF)	1.2.4
Canister Transfer Machine	Protect against drop Limit drop height Protect against spurious movement Protect against inadvertent direct exposure of personnel to radiation	1.2.4
Canister Transfer Machine Canister Grapple	Protect against drop	1.2.4
SNF Canister Grapple	Protect against drop (CRCF)	1.2.4
Waste Package Inner Lid Grapple	Protect against drop (IHF)	1.2.3

Table 1.4.2-1. ITS Controls (Continued)

ITS SSC	Safety Function Implemented through ITS Controls	Section Presenting ITS Controls
High Level Waste Canister Grapple	Protect against drop (CRCF and IHF)	1.2.4
Jib Crane	Protect against a drop (WHF)	1.2.5
Jib Crane Lid Lifting Grapple	Protect against drop (WHF)	1.2.5
Auxiliary Pool Crane	Protect against a drop (WHF)	1.2.5
Pool Lid Lifting Grapple	Protect against drop (WHF)	1.2.5
Spent Fuel Transfer Machine	Protect against drop (WHF) Protect against lifting an SNF assembly above the safe limit for workers (WHF)	1.2.5
Pressurized Water Reactor and Boiling Water Reactor Lifting Grapples	Protect against drop	1.2.5
Transport and Emplacement Vehicle	Protect against inadvertent direct exposure of personnel to radiation	1.3.3
CRCF HVAC	Mitigate the consequences of radionuclide release Support ITS electric power	1.2.4
WHF HVAC	Mitigate the consequences of radionuclide release Support ITS electric power	1.2.5
Emergency Diesel Generator Facility HVAC	Support ITS electric power	1.2.8
ITS Diesel Fuel Oil System	Support ITS electrical power	1.2.8
ITS Diesel Starting Air System	Support ITS electrical power	1.2.8
ITS Diesel Generator	Provide ITS electrical power	1.4.1

NOTE: DOE = Department of Energy; HVAC = heating, ventilation, and air-conditioning.

Table 1.4.2-2. Location of Meteorological Towers and Instruments Associated with Each Tower

Meteorological Site	Location	Instrument
1	Area of repository surface facilities—west–central portion of Midway Valley. Approximately 0.6 mi from North Portal area.	Wind speed, wind direction, and temperature sensors at 197-ft and 33-ft levels Temperature, relative humidity, and solar radiation sensors at 7-ft level Barometric pressure at surface One precipitation recording gauge and one standard storage gauge
2	Yucca Mountain ridge crest—2 mi west–northwest of Site 1.	Wind speed, wind direction, and temperature sensors at 33-ft level Temperature, relative humidity, and solar radiation sensors at 7-ft level Barometric pressure at surface One precipitation recording gauge and one standard storage gauge
4	Alice Hill—2.1 mi northeast of Site 1.	Wind speed, wind direction, and temperature sensors at 33-ft level Temperature, relative humidity, and solar radiation sensors at 7-ft level Barometric pressure at surface One precipitation recording gauge and one standard storage gauge
9	Gate 510—11.9 mi south–southeast of Site 1.	Wind speed, wind direction, and temperature sensors at 33-ft level Temperature, relative humidity, and solar radiation sensors at 7-ft level Barometric pressure at surface One precipitation recording gauge and one standard storage gauge

Table 1.4.2-3. Selected Postevent Monitoring Parameters

Parameter Monitored	Variable per IEEE Std 497
CRCF, RF, WHF and IHF HVAC	
• Confinement waste handling area differential pressure	Types B, C and D
• Exhaust air flow	Types D and E
• Electrical room temperature	Type D
• Exhaust HEPA differential pressure	Type D
• Electrical room fan coil unit flow	Type D
• Electrical room condensing unit status	Type D
Radiation/Radiological Monitoring	
• Airborne radioactivity effluent concentration: CRCF, RF, WHF, IHF	Types B and E
• Area radiation level: CRCF, RF, WHF, IHF	Types C and E
• Continuous air radioactivity level: CRCF, RF, WHF, IHF	Types C and E
• Area radiation level: facility operations rooms and CCCF	Type E
• Continuous air radioactivity level: facility operations rooms and CCCF	Type E
Emergency Diesel Generator Facility HVAC	
• Room temperature	Type D
• Supply air handling unit flow	Type D
• Condensing unit status	Type D
• Exhaust fan status	Type D
• Damper position	Type D
Electrical Power System	
• ITS bus: voltage, current, frequency	Type D
• ITS battery system and uninterruptible power supply status: voltage, current, battery status	Type D
• ITS diesel generator: voltage, current output, frequency, engine temperature, day tank level, starting air pressure	Type D
• Breaker positions on ITS systems	Type D
Pool Water Treatment and Cooling (WHF)	
• Pool water level	Type D
• Pool water temperature	Type D

Table 1.4.2-3. Selected Postevent Monitoring Parameters (Continued)

Parameter Monitored	Variable per IEEE Std 497
Environmental/Meteorological Monitoring	
• Wind speed and direction	Type E
• Air temperature	Type E

NOTE: HEPA = high-efficiency particulate air (filter); HVAC = heating, ventilation, and air-conditioning; IEEE = Institute of Electrical and Electronics Engineers.

Source: IEEE Std 497.

INTENTIONALLY LEFT BLANK

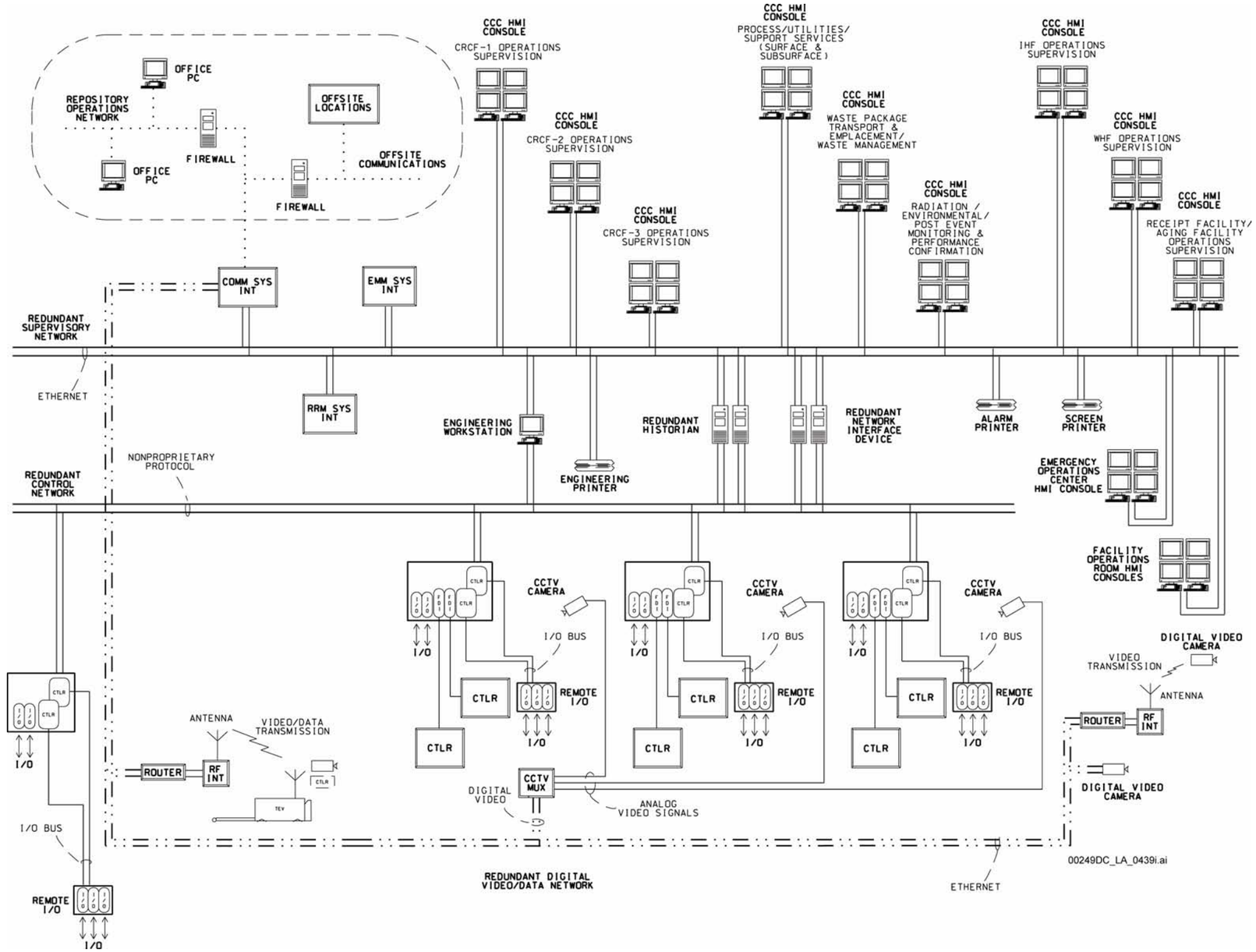

NOTE: CCC = Central Control Center; CCTV = closed-circuit television; EMM = environmental/meteorological monitoring; FDI = foreign device interface; HMI = human–machine interface; I/O = input-output; MUX = multiplexer; PC = personal computer; RF = radio frequency; RRM = radiation/radiological monitoring.

Figure 1.4.2-1. Digital Control and Management Information System Architecture

INTENTIONALLY LEFT BLANK

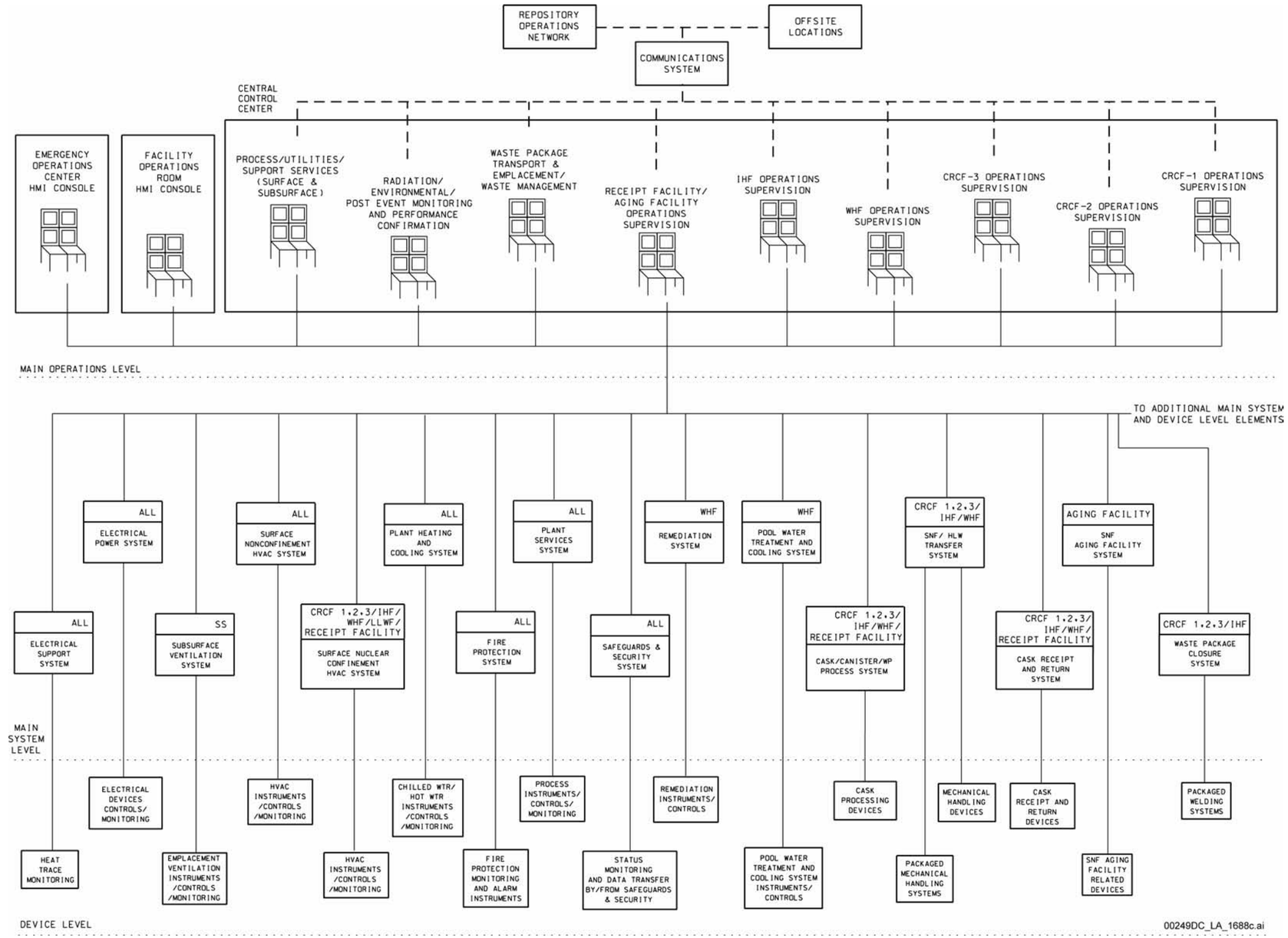

NOTE: The term "ALL" in this figure means "all areas or buildings."
HMI = human–machine interface; HVAC = heating, ventilation, and air-conditioning;
LLWF = Low-Level Waste Facility; SS = subsurface; WP = waste package.

Figure 1.4.2-2. Digital Control and Management Information System Block Diagram (Sheet 1 of 2)

INTENTIONALLY LEFT BLANK

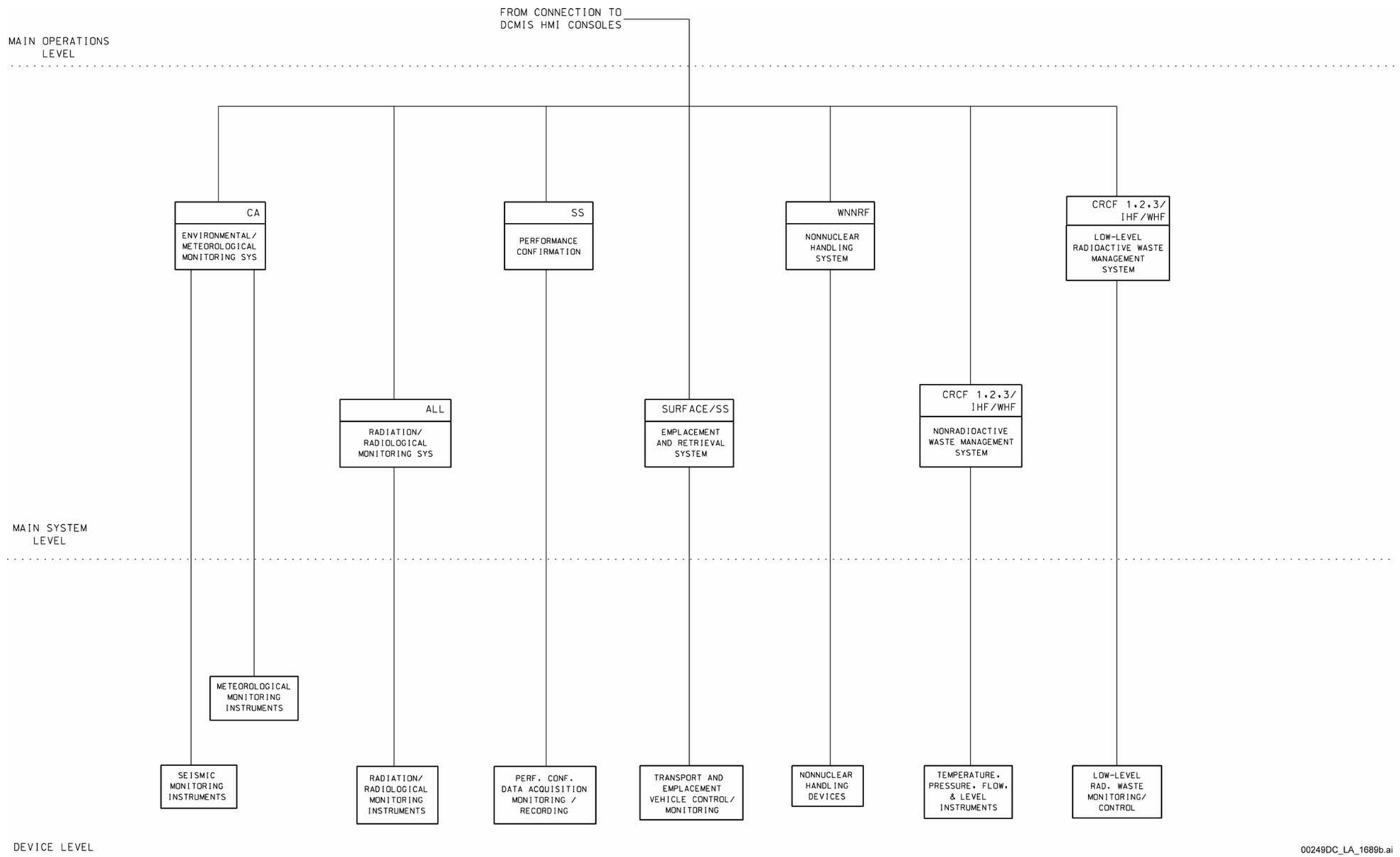

NOTE: The term “ALL” in this figure means “all areas or buildings.”
CA = controlled area; HMI = human–machine interface; SS = subsurface;
WNNRF = Warehouse and Non-Nuclear Receipt Facility.

Figure 1.4.2-2. Digital Control and Management Information System Block Diagram (Sheet 2 of 2)

INTENTIONALLY LEFT BLANK

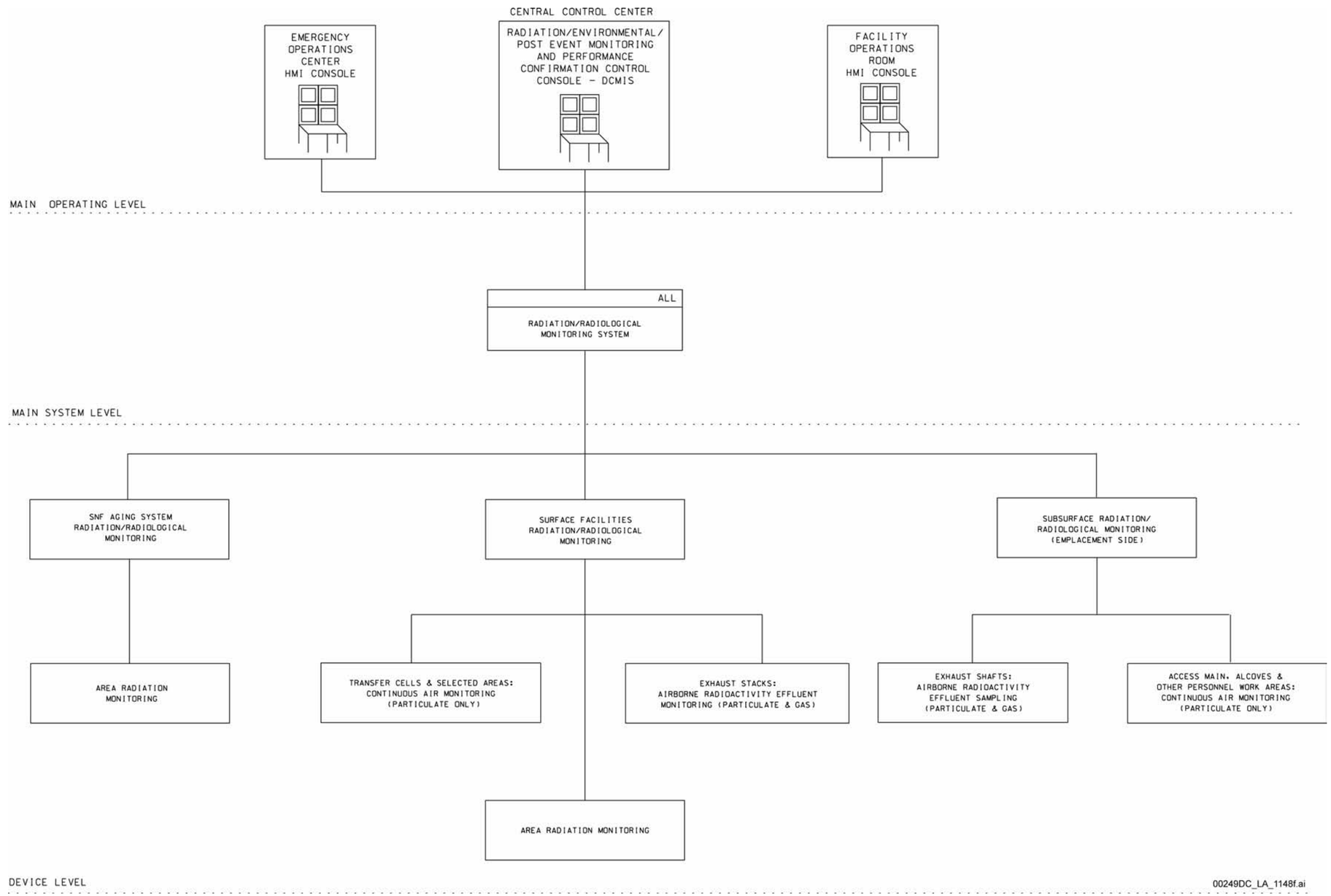

NOTE: All components shown at main operational level are also shown on the DCMIS functional block diagram. They are shown here for drawing clarity. The appropriate quantity and location of the subsurface continuous air monitors and area radiation monitors will be determined and set during detailed design. The term “ALL” in this figure means “all areas or buildings.”
HMI = human–machine interface.

Figure 1.4.2-3. Radiation/Radiological Monitoring System Functional Block Diagram

INTENTIONALLY LEFT BLANK

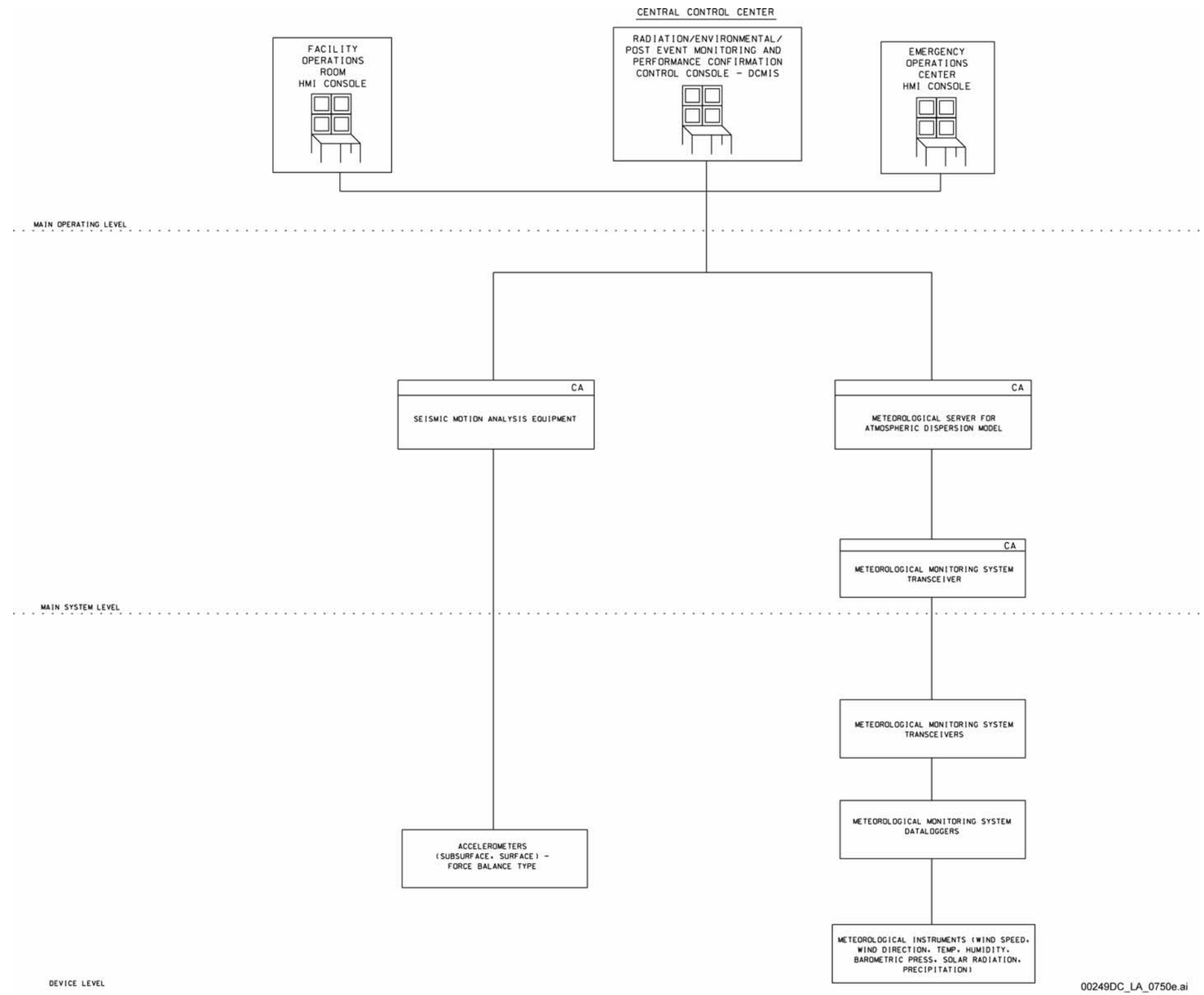

NOTE: All components shown at main operating level are also shown on the DCMIS functional block diagram. They are shown here for drawing clarity.
CA = controlled area; HMI = human–machine interface.

Figure 1.4.2-4. Environmental/Meteorological Monitoring System Functional Block Diagram

INTENTIONALLY LEFT BLANK

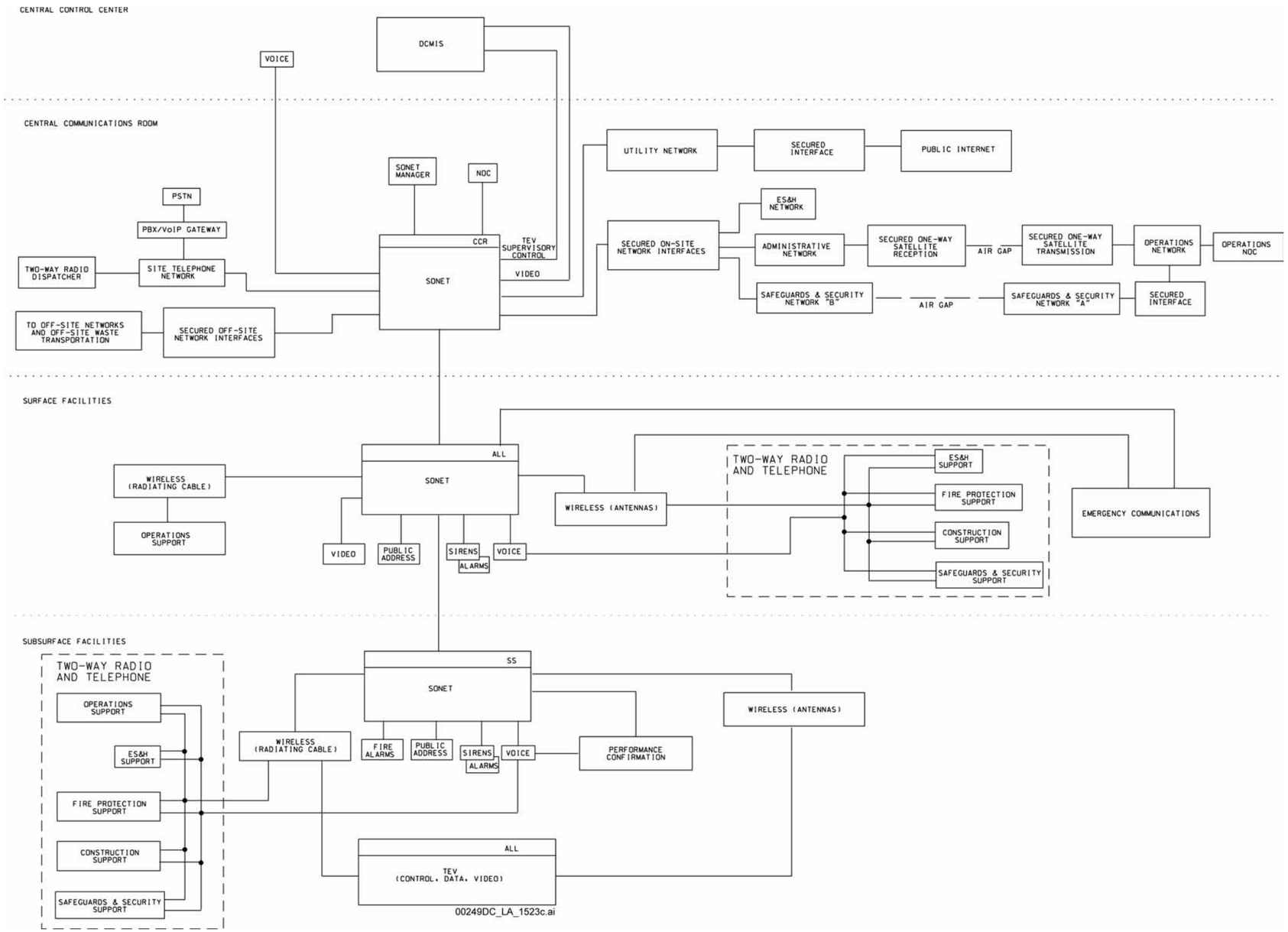

NOTE: Emergency communications include data, video, and voice feeds to the Emergency Operations Center, backup emergency operations center, and offsite locations. CCR = central communications room; ES&H = environmental, safety, and health; NOC = network operations center; PBX = private branch exchange; PSTN = public switched telephone network; SONET = synchronous optical network; VoIP = Voice over Internet Protocol.

Figure 1.4.2-5. Communications System Functional Block Diagram

INTENTIONALLY LEFT BLANK

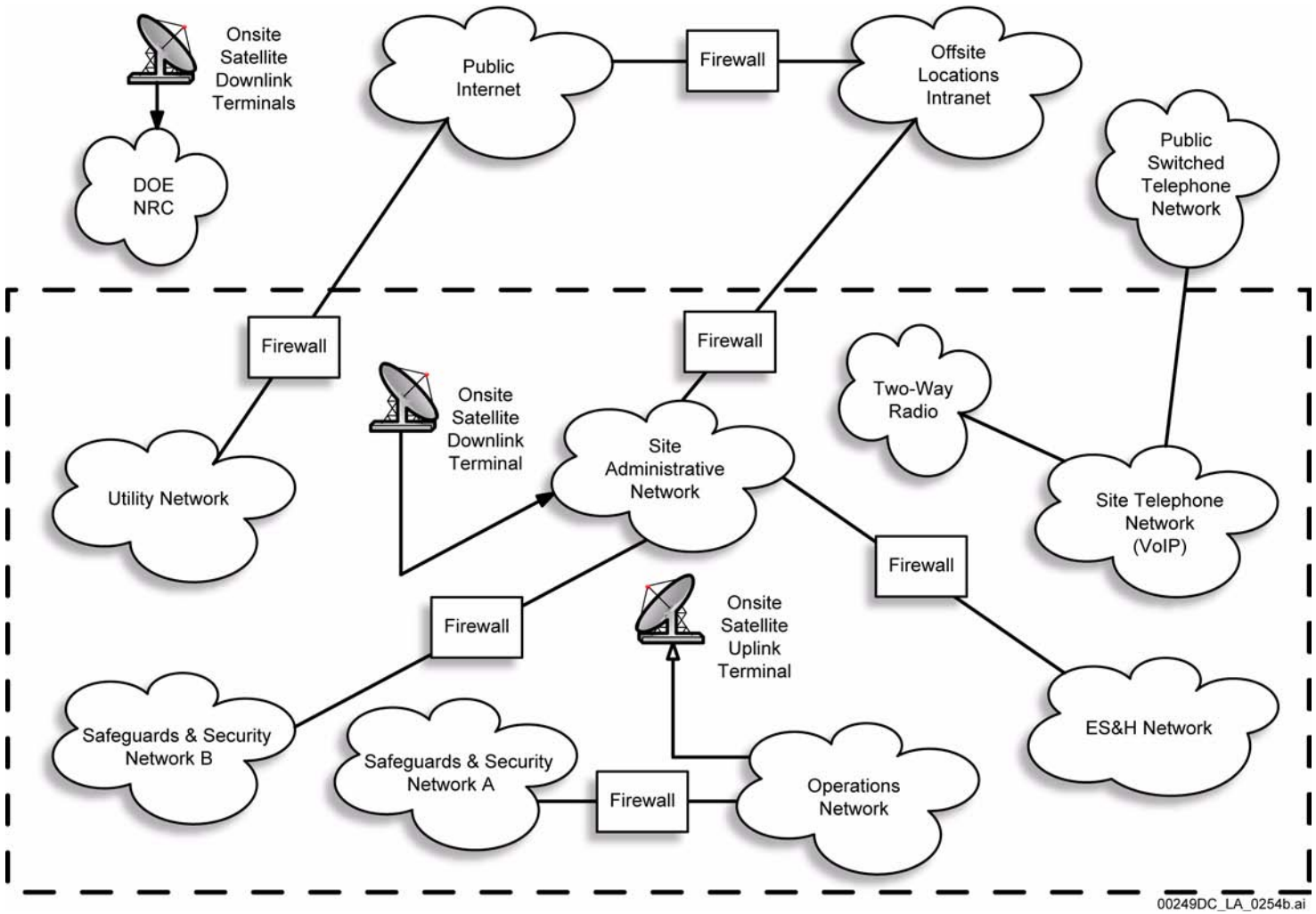

Figure 1.4.2-6. Network Architecture

NOTE: DOE = U.S. Department of Energy; ES&H = environmental, safety, and health; NRC = U.S. Nuclear Regulatory Commission; VoIP = Voice over Internet Protocol.

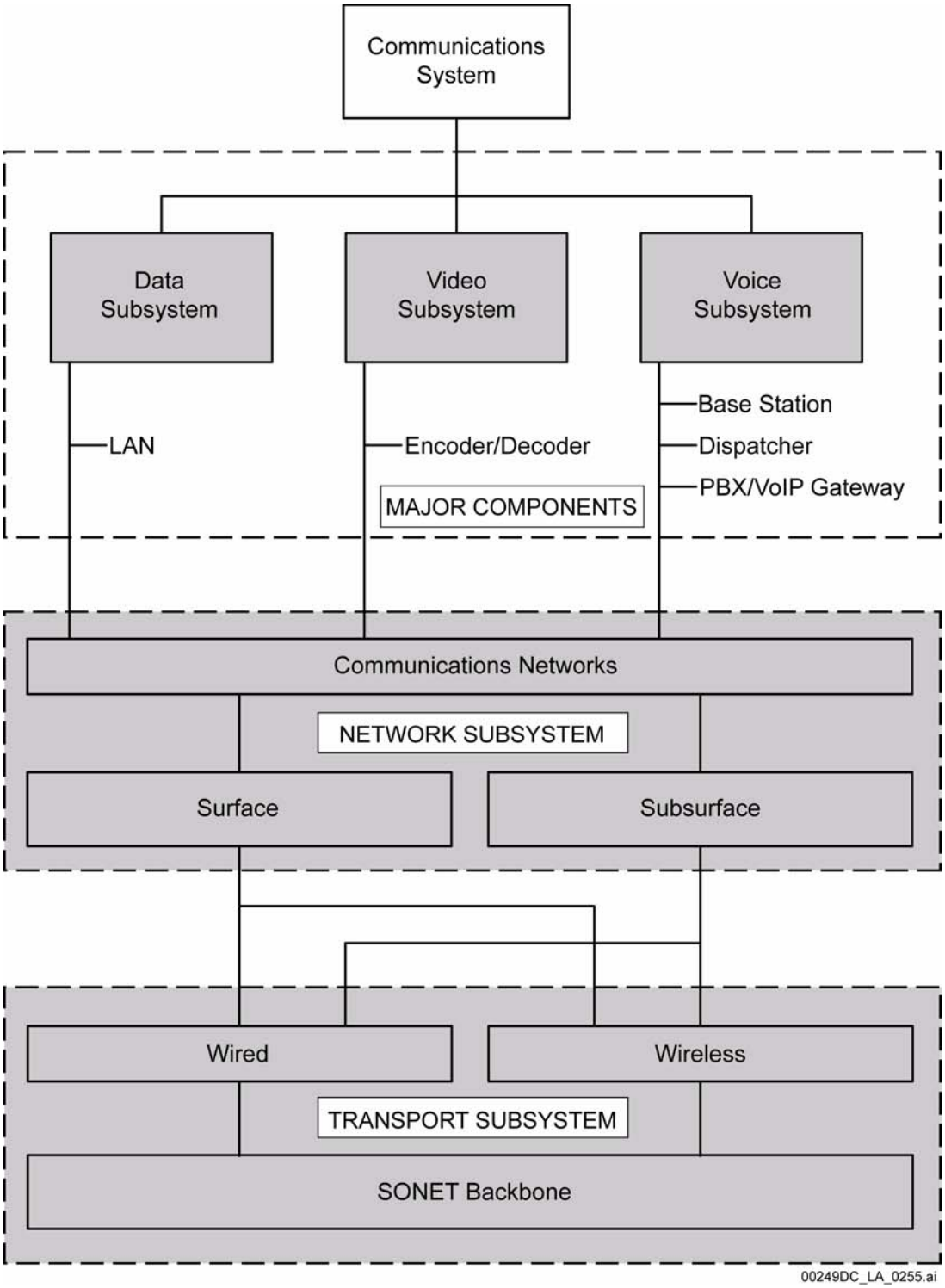

Figure 1.4.2-7. Communications System Organization

NOTE: LAN = local area network; PBX = private branch exchange; SONET = synchronous optical network; VoIP = Voice over Internet Protocol.

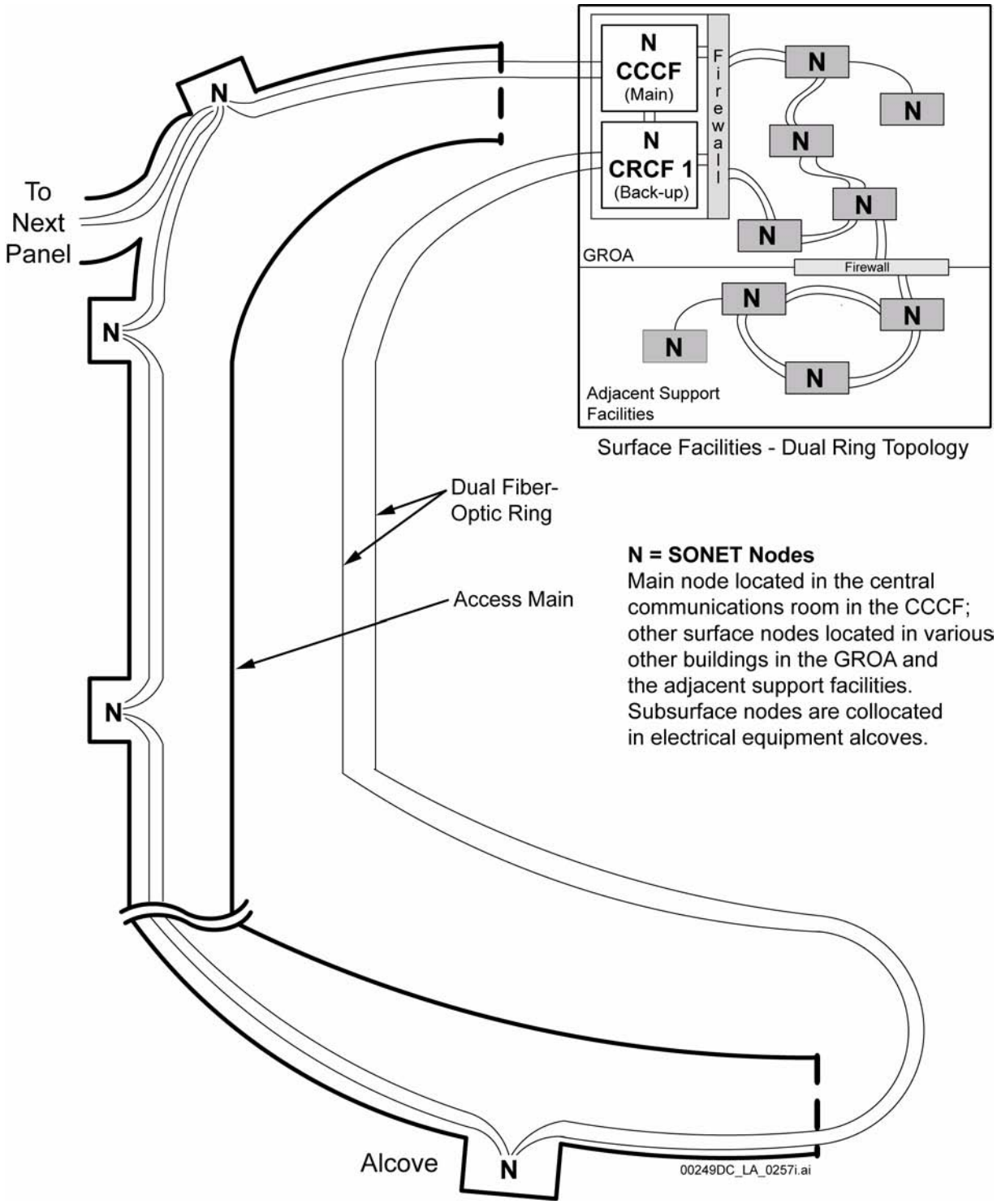

Figure 1.4.2-8. Site Topology—SONET Configuration—Surface/Subsurface

NOTE: SONET = synchronous optical network.

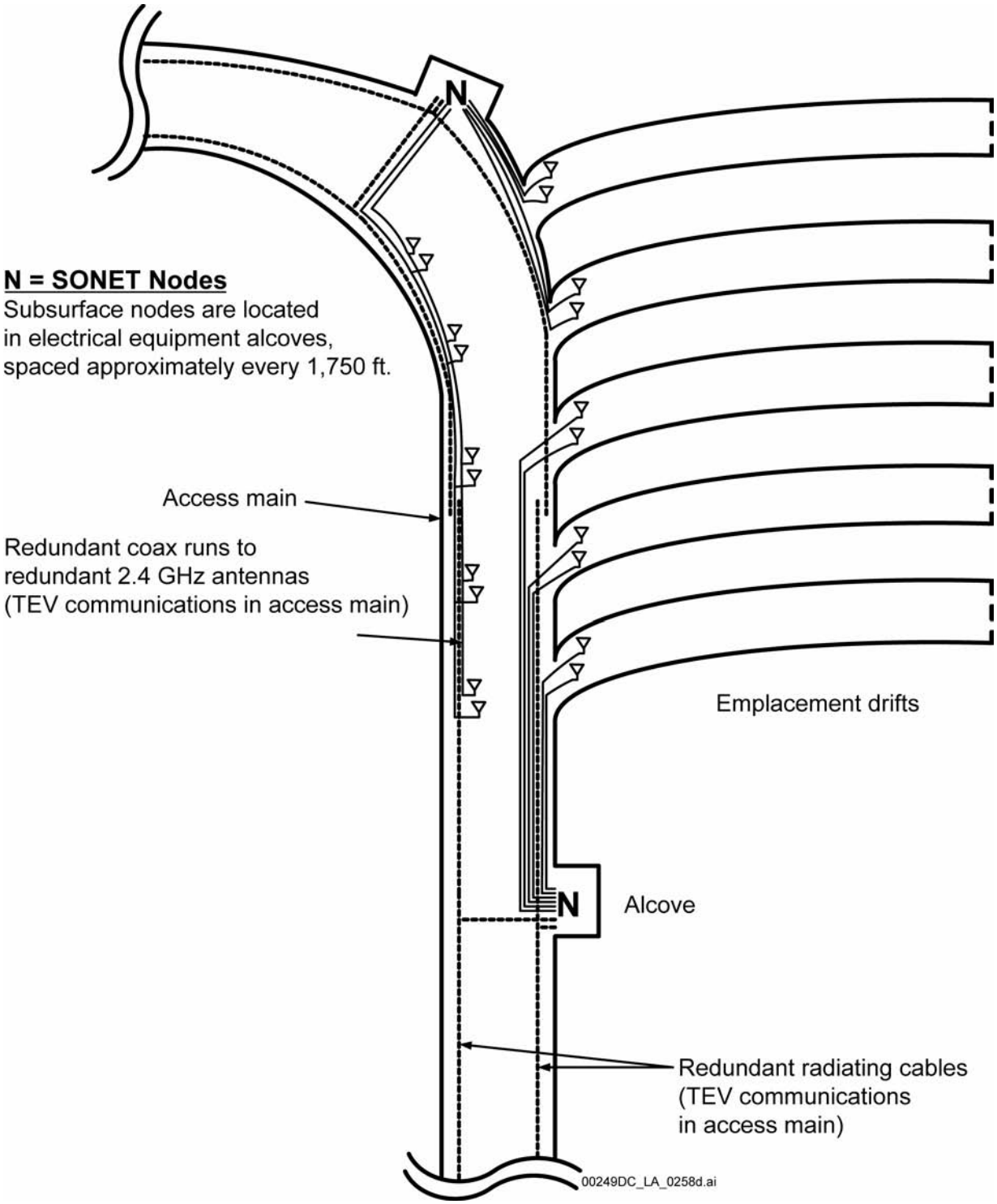

Figure 1.4.2-9. Site Topology—Wireless Configuration—Main and Emplacement Drifts

NOTE: The inverted triangle symbols represent antennas.
SONET = synchronous optical network.

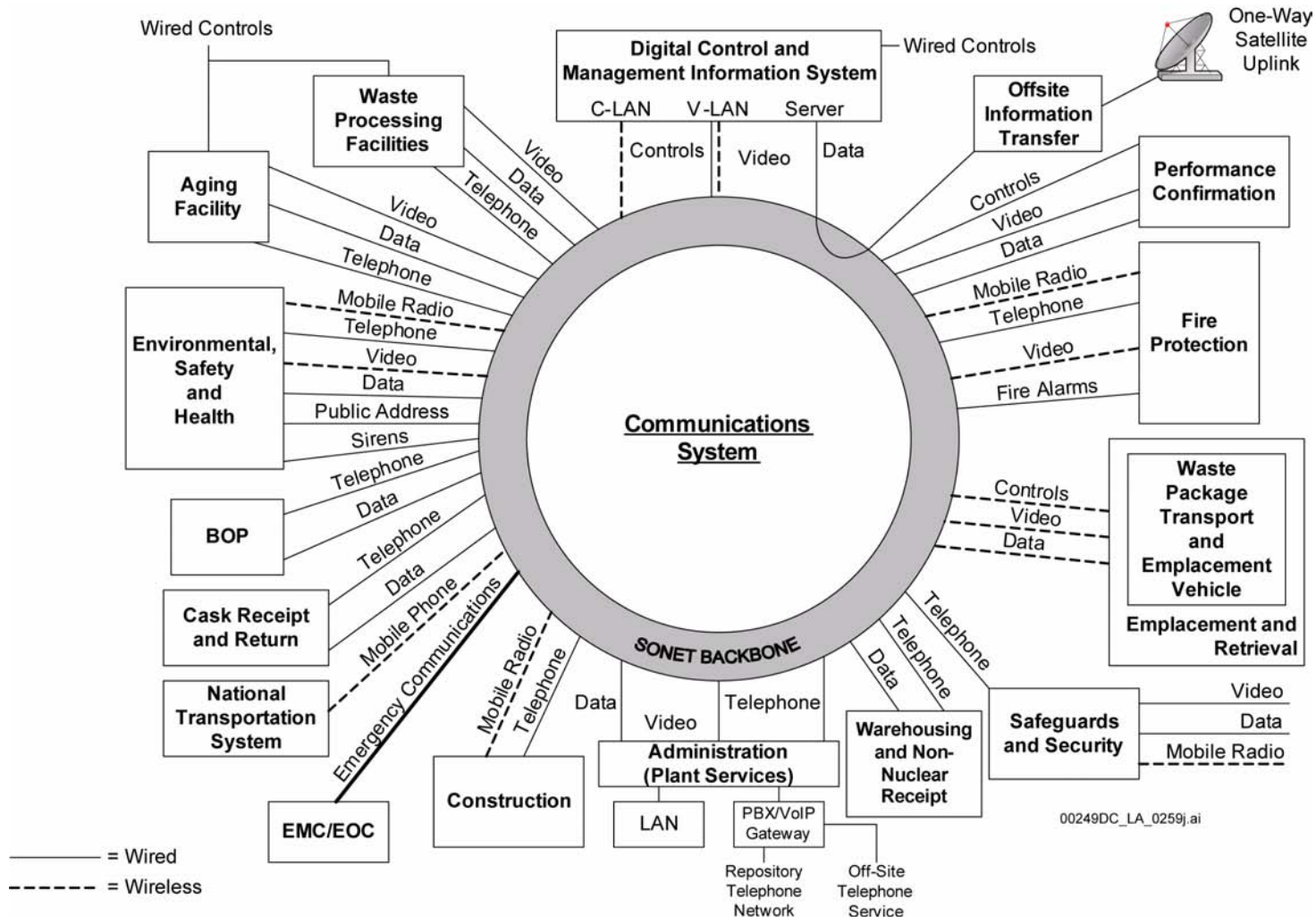

Figure 1.4.2-10. Boundaries and Interfaces

NOTE: Wired controls are part of the DCMIS; surface fire alarms are carried via dedicated fiber optics; secured video, data, and mobile radio for safeguards and security are carried over the communications system.
BOP = balance of plant; C-LAN = controls local area network; EMC = emergency management center; EOC = emergency operations center; LAN = local area network; PBX = private branch exchange; SONET = synchronous optical network; VoIP = Voice over Internet Protocol; V-LAN = video local area network.

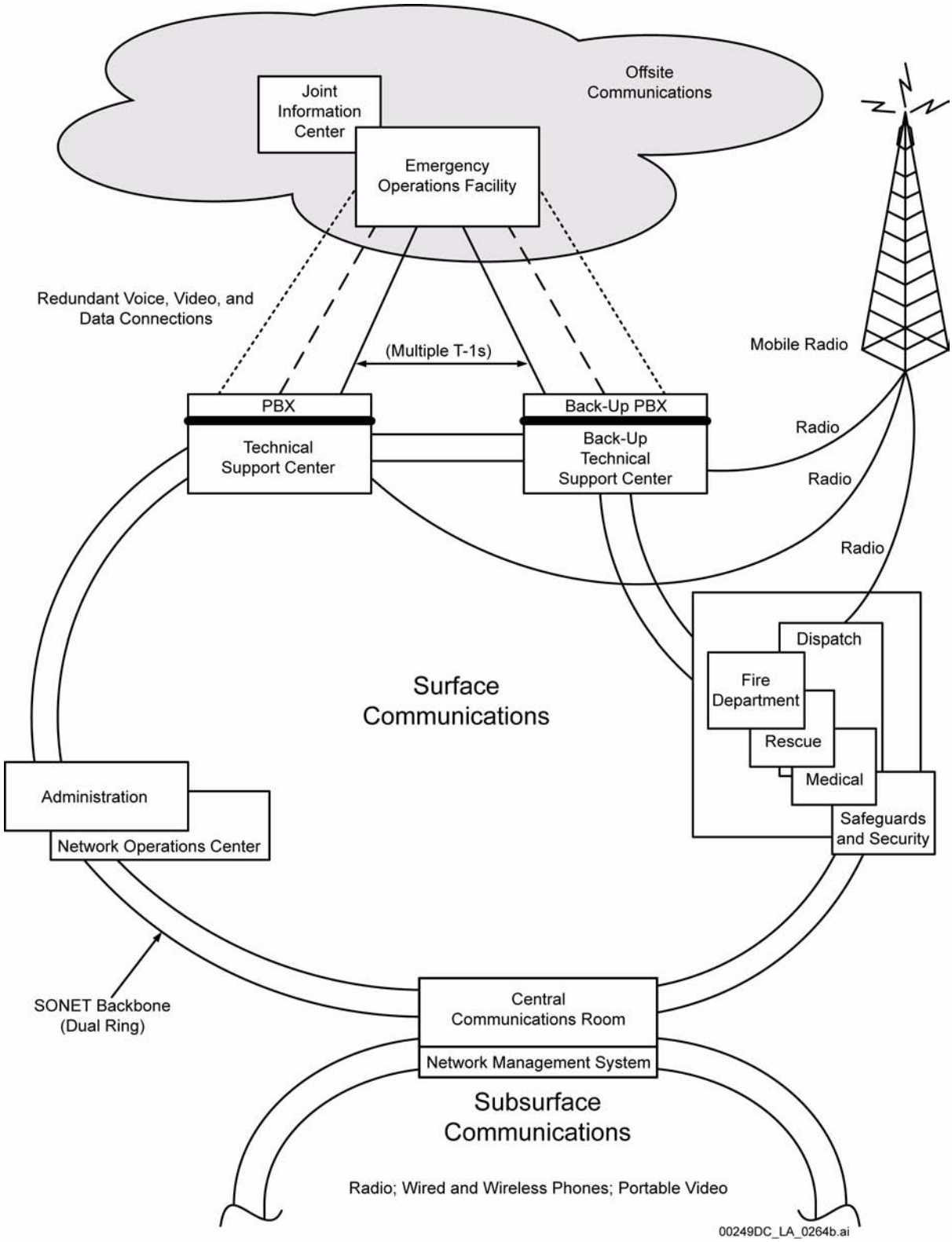

Figure 1.4.2-11. Emergency Management Communications

NOTE: PBX = private branch exchange; SONET = synchronous optical network.

CONTENTS

Page

1.4.3 Fire Protection 1.4.3-1
1.4.3.1 Fire Hazard Analyses. 1.4.3-1
1.4.3.2 Fire Protection System Description. 1.4.3-3
1.4.3.3 Operational Processes 1.4.3-14
1.4.3.4 Design Codes and Standards 1.4.3-16
1.4.3.5 Fire Protection Program. 1.4.3-17
1.4.3.6 General References 1.4.3-20

INTENTIONALLY LEFT BLANK

TABLES

Page

1.4.3-1. Automatic Fire Suppression System Types 1.4.3-25
1.4.3-2. Preclosure Nuclear Safety Design Bases and their Relationship to Design Criteria for the Fire Protection Systems 1.4.3-27
1.4.3-3. Detection System 1.4.3-29

INTENTIONALLY LEFT BLANK

FIGURES

Page

1.4.3-1. Fire Water Loop 1 and Loop 2 Flow Diagram 1.4.3-31
1.4.3-2. Initial Handling Facility Fire Suppression Coverage—Ground Floor Plan at Elevation +0′ –0″ 1.4.3-33
1.4.3-3. Initial Handling Facility Fire Suppression Coverage—Second Floor Plan at Elevation +37′ –0″ 1.4.3-35
1.4.3-4. Initial Handling Facility Fire Suppression Coverage—Roof Plan at Elevation +73′ –0″ 1.4.3-37
1.4.3-5. Wet Handling Facility—Fire Suppression Coverage—Ground Floor Plan at Elevation 0′ –0″ 1.4.3-39
1.4.3-6. Wet Handling Facility—Fire Suppression Coverage—Second Floor Plan at Elevation 40′ –0″ 1.4.3-41
1.4.3-7. Wet Handling Facility—Fire Suppression Coverage—Plan below Elevation 40′ –0″ 1.4.3-43
1.4.3-8. Wet Handling Facility—Fire Suppression Coverage—Pool Plan at Elevation –52′ –0″ 1.4.3-45
1.4.3-9. Receipt Facility Fire Suppression Coverage—Ground Floor Plan at Elevation +0′ –0″ 1.4.3-47
1.4.3-10. Receipt Facility Fire Suppression Coverage—Second Floor Plan at Elevation +32′ –0″ 1.4.3-49
1.4.3-11. Receipt Facility Fire Suppression Coverage—Third Floor Plan at Elevation +64′ –0″ 1.4.3-51
1.4.3-12. Canister Receipt and Closure Facility Fire Suppression Coverage—Ground Floor Plan at Elevation +0′ –0″ 1.4.3-53
1.4.3-13. Canister Receipt and Closure Facility Fire Suppression Coverage—Second Floor Plan at Elevation +32′ –0″ 1.4.3-55
1.4.3-14. Canister Receipt and Closure Facility Fire Suppression Coverage—Third Floor Plan at Elevation +64′ –0″ 1.4.3-57
1.4.3-15. Fire Water Supply Area 28A Fire Water Storage 1.4.3-59
1.4.3-16. Fire Water Supply Area 28A Fire Water Distribution 1.4.3-61
1.4.3-17. Fire Water Supply Area 28B Fire Water Storage 1.4.3-63
1.4.3-18. Fire Water Supply Area 28B Fire Water Distribution 1.4.3-65
1.4.3-19. Fire Water Supply Area 28E Fire Water Storage 1.4.3-67
1.4.3-20. Fire Water Supply Area 28E Fire Water Distribution 1.4.3-69
1.4.3-21. Typical Double-Interlocked Preaction Sprinkler Arrangement 1.4.3-71

INTENTIONALLY LEFT BLANK

1.4.3 Fire Protection

[NUREG-1804, Section 2.1.1.2.3: AC 1, AC 2, AC 3, AC 6; Section 2.1.1.6.3: AC 1, AC 2; Section 2.1.1.7.3.1: AC 1; Section 2.1.1.7.3.2: AC 1; Section 2.1.1.7.3.3(I): AC 1, AC 2, AC 4; Section 2.1.1.7.3.3(II): AC 3; HLWRS-ISG-02, Section 2.1.1.2.3: AC 2]

This section describes fire hazard analyses, system description, operational processes, design codes and standards, and the Fire Protection Program for the geologic repository operations area (GROA) and adjacent support facilities.

1.4.3.1 Fire Hazard Analyses

[NUREG-1804, Section 2.1.1.7.3.3(I): AC 4(1)]

Fire hazard analyses presented in this section are performed to determine appropriate alarm, detection, and suppression requirements for life safety and property protection for each facility. A specific fire hazard analysis has been prepared for each waste handling facility, the Central Control Center Facility (CCCF), the Emergency Diesel Generator Facility, and the subsurface facility; a general site fire hazard analysis has been prepared for the remaining structures and surface operations at the repository. A fire hazard analysis is based on reviews of the general arrangement drawings, other design information, and piping and instrumentation diagrams. This process identifies potential fire hazards, ignition sources, in situ combustibles, and transient combustibles. The design basis fire within each fire area is assumed. The fire is assumed to consume all available combustibles within the fire area. The fire hazard analysis also assumes the fire will occur while the installed automatic fire protection systems malfunction and there is no manual response to suppress the fire. It is assumed that a fire may occur at any time, but is not postulated to occur simultaneously with another Category 1 or 2 design basis event. Using this information, the fire hazard analyses assess the consequences of a fire and the ability of the fire protection system to meet the performance objectives. Specific design solutions for fire prevention, detection, suppression, and containment are determined and incorporated into the design. The analysis methodology is further presented in Section 1.4.3.2. Fire hazard analyses are periodically updated as design and operations evolve. When the fire hazards analysis identifies additional fire hazards and design features necessary to mitigate such hazards, a review of the information will be performed. Additional design features will be identified to mitigate newly introduced hazards as identified.

Separately, the preclosure safety analysis (PCSA) of event sequences presented in Section 1.7 identifies those fire-related events that have the potential to initiate Category 1 or Category 2 event sequences. The PCSA is based on historical data available from the National Fire Protection Association of fire frequency and severity for similarly constructed and equipped nuclear facilities. These historical data differentiate between situations where suppression was available and where it was not. The objective of the PCSA fire analysis is to categorize fire-initiated event sequences, determine the probability and severity of exposure to radioactivity, determine the probability and severity of release of radionuclides and resulting dose consequences, and the potential for criticality associated with fire scenarios. These separate and distinct PCSA and fire hazard analyses address different aspects of fire potential and consequences, but combined ensure nuclear safety, life safety, protection of important to safety (ITS) components, and general property protection.

Information provided in this section is extracted from the following fire hazard analyses unless otherwise indicated. These fire hazard analyses have been developed to identify the potential

internal and external hazards, the mitigating features, and to define the requirements for an adequate fire protection system:

- *Initial Handling Facility Fire Hazard Analysis* (BSC 2008a)
- *Canister Receipt and Closure Facility 1 Fire Hazard Analysis* (BSC 2007a)
- *Wet Handling Facility Fire Hazard Analysis* (BSC 2008b)
- *Receipt Facility Fire Hazard Analysis* (BSC 2007b)
- *Emergency Diesel Generator Facility Fire Hazard Analysis* (BSC 2007c)
- *Site Fire Hazard Analysis* (BSC 2007d)
- *Subsurface Repository Fire Hazard Analysis* (BSC 2007e)
- *Central Control Center Facility Fire Hazard Analysis* (BSC 2007f).

The natural phenomena hazards that affect the fire protection system are identified in Section 1.6. The site fire hazard analysis includes the Aging Facility (Areas 17P and 17R) and the remaining balance of plant facilities (BSC 2007d).

1.4.3.1.1 Scope

The fire hazard analyses identify design features, fire hazards, and explosion hazards and provide a basis for the design of the fire protection systems and features. These fire protection systems and features help minimize the potential for an onsite or offsite release of hazardous or radiological material that could affect the health and safety of workers and the public, or the environment, and provide a proper level of personnel safety and property protection.

1.4.3.1.2 Analysis Methodology

The fire hazard analyses have determined potential fire hazards that may be inherent to each fire area and specify the fire protection features to mitigate these potential hazards. The overall approach taken in performing the assessment included the following:

- Provide features that minimize the potential for the initiation of a fire.

- Provide fire protection through:

  – Passive fire barriers
  – Automatic fire detection and suppression systems
  – Manual fire suppression systems to supplement automatic fire suppression systems.

- Evaluate the potential fire hazards in each fire area to specify appropriate design requirements.

The fire hazard analyses identified in Section 1.4.3.1 are performed in accordance with applicable guidance in the April 200l Regulatory Guide 1.189, Section 1.2, and NFPA 801, *Standard for Fire Protection for Facilities Handling Radioactive Materials*, Section 4.2.

The fire hazard analyses identified in Section 1.4.3.1 for the surface and subsurface facilities considered the following for each separate fire area:

- Protection of ITS systems, structures, and components (SSCs)
- Potential for toxic or radiological incident due to a fire
- Construction/operations
- High-value property
- Description of fire hazards
- Life safety considerations
- Exposure fire potential/potential for fire spread between fire areas
- Fire protection features
- Design basis fire scenario
- Damage potential: maximum possible fire loss
- Important process equipment
- Recovery potential
- Consequence of an automatic fire suppression system failure.

Fire protection for the transportation, aging, and disposal (TAD) canister and dual-purpose canister in an aging overpack during movement between surface facilities or during movement to and storage at the aging pads is a design feature of the TAD canister and aging overpack. The TAD canister and aging overpack design requirements provide that the TAD canister can withstand a fully engulfing fire without failure of its containment function and the aging overpack can withstand the same fully engulfing fire without failure of its shielding function. The fully engulfing fire is defined in 10 CFR 71.73(c)(4) with the clarification that the burning period is calculated based on a pool fire of all the site transporter hydrocarbon fuel and other combustible lubricating and hydraulic fluids plus other combustible and flammable materials on the site transporter (DOE 2008, Section 3.3).

A description of the fire protection systems and features resulting from these fire hazard analyses is provided in Sections 1.4.3.2 to 1.4.3.4.

1.4.3.2 Fire Protection System Description

[NUREG-1804, Section 2.1.1.2.3: AC 1(2), (3), (4), AC 2, AC 3; Section 2.1.1.6.3: AC 1(2)(f), (h), (i), AC 2(2); Section 2.1.1.7.3.1: AC 1(1), (2), (3), (9); Section 2.1.1.7.3.2: AC 1(1), (2); Section 2.1.1.7.3.3(I): AC 1(1), AC 2(1), (2); Section 2.1.1.7.3.3(II): AC 3(4)]

Facilities are designed with both active and passive fire protection features to ensure that fire safety is not reliant on only one means of protection. Surface facilities handling spent nuclear fuel and high-level radioactive waste have:

- Detection and alarm systems

- Automatic wet pipe sprinkler systems and automatic double-interlocked, preaction sprinkler systems

- Standpipe systems to support manual fire-fighting capabilities.

The subsurface facility has portable fire extinguishers mounted in the ramps and access mains and automatic gaseous fire suppression systems for the electrical cabinets in the electrical alcoves located throughout the subsurface facility.

The Fire Protection Program establishes policies, responsibilities, and administrative controls necessary to protect workers and the public from the consequences of events associated with fire and to conserve property and resources for the continuity of repository operations. The Fire Protection Program provides for the protection of SSCs that are ITS or important to waste isolation (ITWI), and it satisfies the fire protection objectives provided in Section B, Discussion, of Regulatory Guide 1.189. The Fire Protection Program for the GROA includes appropriate controls and procedures needed for effective fire protection to maintain the performance of the fire protection systems. Section 1.4.3.5 provides more detail on the Fire Protection Program.

Function—The function of the fire protection system is to detect, suppress, and/or contain fires and to sound alarms for personnel to evacuate the immediate area (BSC 2007g).

The fire protection system and its subsystems have been categorized as non-ITS except for the double-interlocked, preaction sprinkler system actuation valves, detectors, control cabinet, and sprinklers that reduce the likelihood of inadvertent initiation in waste handling areas where there is potential for a breach of a loaded canister.

1.4.3.2.1 Fire Protection System for Surface Facilities

The surface fire protection system is composed of the following subsystems:

- Fire water subsystem
- Fire suppression subsystem
- Fire detection subsystem
- Fire alarm subsystem
- Fire barrier subsystem.

Fire protection system service facilities are shown on the site plot plan (Figure 1.2.1-2). The site fire water distribution diagram is provided in Figure 1.4.3-1.

Water-based fire suppression systems, specifically automatic wet-pipe fire suppression and automatic double-interlocked preaction sprinkler systems, are used in controlling fires in the facilities. The buildings protected with automatic fire suppression systems are identified in Table 1.4.3-1.

The Wet Handling Facility (WHF) and the Canister Receipt and Closure Facility (CRCF) use moderator control as discussed in Sections 1.14.2.3.2 to 1.14.2.3.3.5. Moderator control is a criticality design control feature described in Section 1.14. Moderator control in the WHF and the CRCF is implemented with automatic, double-interlocked preaction sprinkler systems. Although not required for moderator control in the Initial Handling Facility (IHF) or Receipt Facility (RF), the fire suppression design for these facilities uses the double-interlocked preaction sprinkler system. The fire area coverage is shown in Figures 1.4.3-2 to 1.4.3-14.

The design of each building is in accordance with NFPA 101, *Life Safety Code*.

Power and instrumentation cables are fire resistant in accordance with the testing requirements of IEEE Std 1202-2006, *IEEE Standard for Flame-Propagation Testing of Wire and Cable*.

Fire suppression systems are installed in accordance with NFPA 13, *Standard for the Installation of Sprinkler Systems*.

The fire hazard analyses for each facility (Section 1.4.3.1) examined the potential for explosions and concluded that no credible explosion hazards have yet been identified. Battery rooms are well-ventilated and the service gases used in the facilities are inert. The use of explosives for surface construction will not be allowed once operations have begun.

In situ combustibles are minimized and transient combustibles will be controlled through the strict enforcement of the combustible controls program as part of the Fire Protection Program. Under normal operating conditions, waste handling areas are unoccupied, and combustibles are minimized. When maintenance operations are being conducted, transient combustibles may be present. The areas outside the waste handling areas are protected with automatic wet-pipe sprinkler systems. Floor drains in accordance with NFPA 801 within each facility and thick shield walls with sealed penetrations and other design features around waste handling areas inhibit water from entering these areas during the activation of a sprinkler system installed outside these designated areas.

Materials of Construction—The fire protection systems are selected and installed in accordance with NFPA 10, *Standard for Portable Fire Extinguishers*; NFPA 13, *Standard for the Installation of Sprinkler Systems*; NFPA 20, *Standard for the Installation of Stationary Pumps for Fire Protection*; NFPA 22, *Standard for Water Tanks for Private Fire Protection*; NFPA 24, *Standard for the Installation of Private Fire Service Mains and Their Appurtenances*; NFPA 72, *National Fire Alarm Code*; and NFPA 221, *Standard for High Challenge Fire Walls, Fire Walls, and Fire Barrier Walls*, so they are sufficiently robust to ensure that the systems are available to detect and mitigate a fire condition during normal and off-normal conditions.

Approved fire protection equipment and materials are included on lists published by recognized testing laboratories (e.g., Factory Mutual or Underwriters Laboratories). These listings indicate that specific equipment or materials meet nationally recognized standards and have been tested and found suitable for use in a specified manner.

1.4.3.2.1.1 Fire Water Subsystem for Surface Facilities

The function of the fire water subsystem is to provide storage and pumping capacity and to distribute water for fire protection in specified surface facilities and to individual fire hydrants. Figures 1.4.3-15 to 1.4.3-20 show the fire water supply (Areas 28A, 28B, and 28E). The fire water facilities provide functional space for storage of bulk fire water, pumping equipment and systems, and related support equipment.

The fire water subsystem consists of two loops, as shown in Figure 1.4.3-1. Loop 1 services most of the facilities in the North Portal area. Loop 2 provides water for the protection of the

Administration Facility; the Utilities Facility; the Central Security Station; the Fire, Rescue, and Medical Facility; Warehouse and Central Receiving; Craft Shops, and a Fire Water Facility. The GROA and adjacent facilities that are serviced by Fire Protection Loop 1 and Loop 2 are also shown on the site plot plan (Figure 1.2.1-2).

Each fire water loop consists of fire water storage tanks, fire pumps, jockey pumps, and underground distribution piping. The fire water storage tanks are designed and installed in accordance with NFPA 22. Loop 1 has four 300,000-gal-capacity fire water storage tanks, while Loop 2 has a single 300,000-gal-capacity storage tank. The plant services system provides water to fill the fire water storage tanks.

The fire pumps are designed and installed in accordance with NFPA 20. Each fire water pump is sized to supply water at the required pressure of the most demanding automatic fire suppression system, with an additional allowance for fire hose use or to meet the fire hydrant demand. A jockey pump is provided to keep the systems pressurized under normal conditions.

The fire water distribution piping is designed to provide a loop-type grid that provides two-way water flow to each automatic fire suppression connection, standpipe connection, and fire hydrant. The main distribution loop piping is designed, installed, and tested in accordance with NFPA 24.

Sectional control valves are arranged to provide alternative water flow paths to any point in the system and to limit the number of hydrants and individual suppression systems made inoperative during a single break or impairment. The distribution piping provides the design demand over the longest pipe route to each protected hazard at a residual pressure not less than 20 psig at ground elevation. The control and section valves are electrically supervised and are of the visual-indicating type. Valves are installed to isolate the hydrants from other portions of the distribution system for ease of maintenance or repair without interrupting service to other portions of the system. The fire water subsystem is tested in accordance with NFPA 25, *Standard for the Inspection, Testing, and Maintenance of Water-Based Fire Protection Systems*.

Loop 1—Loop 1 of the fire water subsystem consists of four fire water storage tanks, fire pumps, jockey pumps, and a looped underground distribution piping system supplying water to fire hydrants, standpipe systems, and the automatic suppression systems that protect the facilities identified in Table 1.4.3-1. Each fire water storage tank has the capacity to store a minimum usable volume of 300,000 gal of water dedicated for suppressing fires through the use of fire hoses and automatic suppression systems. Each pair of tanks and their associated fire pumps are separated from other fire water storage tanks by a sufficient distance to minimize the potential for a single external hazard from destroying the capability of pumping water to fight a fire. Located adjacent to the fire water storage tanks, inside a fire pump house, is one electrically driven fire pump and one diesel-driven fire pump separated by a 3-hour rated fire barrier.

Piping from the main loops into the IHF, CRCF, WHF, and RF includes redundant piping connections. Where each piping connection enters the building, the two are connected to provide water to sprinkler systems and the standpipe system. Isolation valves are installed in the main piping to control the water to each sprinkler system and each standpipe system.

Loop 2—Loop 2 of the fire water subsystem consists of one 300,000-gal-capacity fire water storage tank, one diesel engine driven fire pump, one jockey pump, and a looped underground distribution piping system supplying water to fire hydrants and to the automatic suppression connections identified in Table 1.4.3-1. Loop 1 and Loop 2 are connected by two locked, closed cross-connect valves to allow interconnection between the loops if necessary.

1.4.3.2.1.2 Fire Suppression Subsystem for Surface Facilities

The fire suppression subsystem delivers fire suppressants as required for hazard protection in the facilities identified in Table 1.4.3-1. Only aqueous fire sprinkler systems will be used in the surface facilities.

The fire suppression subsystem is composed of automatic suppression systems, fire hose stations, exterior fire hydrants, and portable fire extinguishers. The subsystem provides appropriate suppression and includes the distribution and delivery means for the suppression agent to extinguish the fire. Based on the fire hazard analysis, the appropriate fire suppression subsystem is determined for each fire area.

Aqueous suppression systems include both automatic and manual systems. Both types of systems are supplied from the fire water distribution subsystem. The manual suppression system is provided to supplement the automatically actuated fire suppression system.

The manual systems allow water to be delivered to the fire through the use of both small- and large-diameter fire hoses. The standpipes supplying fire hose connections are installed in buildings identified in Table 1.4.3-1. The standpipe systems for nuclear facilities are Class III systems designed and installed in accordance with NFPA 14, *Standard for the Installation of Standpipe and Hose Systems*. Each standpipe is located within a protected stairway or area with hose valves located on each floor level and on the roof. The automatic fire suppression systems are designed in accordance with NFPA 13. Portable fire extinguishers are provided in accordance with NFPA 10.

The fire water subsystem provides water to the fire hydrants that are designed and installed in accordance with NFPA 24. Fire hydrants are located so that a sufficient and effective hose stream can be provided to any onsite location where in situ or transient combustibles could jeopardize SSCs. Fire hydrants are installed approximately every 250 ft on the fire water distribution subsystem.

Automatically actuated fire suppression systems are installed in the buildings identified in Table 1.4.3-1. Automatic wet-pipe sprinkler systems are installed throughout each building, except in the waste handling areas. Automatic double-interlocked, preaction sprinkler systems are used in waste handling areas in the IHF, WHF, RF, and CRCF.

The fire suppression subsystem is designed and installed in accordance with the seismic requirements of NFPA 13, Section 9.3.5, considering site-specific seismic use and importance factors in accordance with *International Building Code 2000* (ICC 2003). This section of NFPA 13 specifies the methodology for designing seismic braces for fire suppression piping.

The design approach for fire protection in the waste handling areas utilizes automatic double-interlocked, preaction sprinkler systems that meet identified reliability goals for the prevention of spurious actuation. The suppression systems are designed and installed in accordance with NFPA 13 requirements. Within the waste handling areas, in situ combustibles are minimized, and transient combustibles are controlled through the strict enforcement of the combustible control program. The fire area coverage for the IHF, WHF, RF, and CRCF is shown in Figures 1.4.3-2 to 1.4.3-14. These figures show the different types of fire suppression systems installed in the nuclear facilities.

Moderator control is implemented to ensure criticality prevention. Only a limited portion of the double-interlocked preaction sprinkler system in each waste handling area is classified as ITS, with specific reliability design bases. Details of the design of these portions are presented below.

System Description—The double-interlocked, preaction solenoid valve, detector array, control cabinet, and sprinkler heads with the fusible links in waste handling areas constitute the ITS portion of the fire protection system.

Operational Processes—The double-interlocked preaction sprinkler systems operate automatically upon receipt of two separate inputs, in any order. A signal must be sent to the solenoid valve to open based on inputs from the fire detector or fire detectors array, allowing water to flow to the sprinkler heads. The sprinkler head fusible links must also open, allowing air to escape from the sprinkler piping between the check valve and the sprinkler head, allowing the check valve to open and water to flow through the sprinkler heads. Periodic surveillances ensure the continued capability of the double-interlocked preaction sprinkler systems.

Safety Category Classification—These portions of the fire protection system are ITS, because they are relied on to reduce the probability of inadvertent introduction of moderator into areas where there is a potential for a breach of a loaded canister. Design basis reliability requirements have been established for the ITS automatic, double-interlocked preaction sprinkler systems in the waste handling areas of the WHF and CRCF. Figure 1.4.3-21 shows a typical double-interlocked preaction sprinkler system.

Procedural Safety Controls to Prevent Event Sequences—There are no procedural safety controls associated with the fire protection systems.

Design Bases and Design Criteria—The nuclear safety design bases for ITS and important-to-waste-isolation (ITWI) SSCs and features are derived from the preclosure safety analysis presented in Sections 1.6 through 1.9 and the postclosure performance assessment presented in Sections 2.1 through 2.4. The nuclear safety design bases identify the safety functions to be performed and the controlling parameters with values or ranges of values that bound the design.

The quantitative assessment of event sequences, including the evaluation of component reliability and the effects of operator action, is developed in Section 1.7. SSCs or procedural safety controls appearing in an event sequence with a prevention or mitigation safety function are described in the applicable design section of the SAR.

Section 1.9 describes the methodology for safety classification of SSCs and features of the repository. The tables in Section 1.9 present the safety classification of the SSCs and features. These tables also list the preclosure and postclosure nuclear safety design bases for each structure, system, or major component.

To demonstrate the relationship between the nuclear safety design bases and the design criteria for the repository SSCs and features, the nuclear safety design bases are repeated in the appropriate SAR sections for each individual ITS/ITWI SSC or feature that performs a safety function. The design criteria are characteristics of the ITS/ITWI SSCs or features that are utilized to implement the assigned safety functions.

The nuclear safety design bases and design criteria for the ITS portion of the fire protection system are addressed in Table 1.4.3-2.

Design Methodologies—The design methodologies used for the design of the fire suppression systems are in accordance with NFPA 13, *Standard for the Installation of Sprinkler Systems*.

Consistency of Materials with Design Methodologies—The structural, mechanical, and electrical aspects of the fire protection systems utilize materials consistent with the applicable design standard.

Design Codes and Standards—The design of the automatic fire suppression system is in accordance with NFPA 13. The ITS portions of the fire suppression systems are seismically supported as described immediately below.

Load Combinations Used for Normal and Category 1 and 2 Event Sequence Conditions—The fire protection systems and their supports are designed in accordance with NFPA 13.

The fire protection systems are adequately supported and anchored to ensure that they are capable of performing their intended functions under the design loading conditions. It is also verified that the fire protection systems do not interfere with the safety function of adjacent ITS SSCs. The seismic demand for the ITS portion of the fire suppression subsystem is based on the seismic in-structure response spectra for design basis ground motion–2 in horizontal and vertical directions.

The supports are attached to concrete or structural steel members of the building by bolted connections or welding. The supports are spaced at intervals as required by engineering evaluation. The supports are provided in transverse, longitudinal, and vertical directions to withstand the effects of seismic loads from each of the directions.

1.4.3.2.1.3 Fire Detection and Alarm Subsystems for Surface Facilities

The primary function of the fire detection and alarm subsystems is to provide a means for occupant notification of fire conditions in affected facility areas, allowing occupants ample time to evacuate and to alert fire-fighting personnel to the fire condition. Additional functions for the fire detection and alarm subsystems include providing the means to collect and transmit fire protection signals, including trouble or alarm, from fire protection equipment at a specific facility to the main fire alarm panel, which in turn sends signals to the CCCF. The fire detection and alarm subsystems include

detection panels; thermal, flame, and smoke detection devices; system actuation devices; valve supervision; a facility fire alarm panel with graphic display to indicate the source of the alarm or trouble signal; audible and visual indicating devices; manual pull stations; and interconnecting electrical circuits. The facility fire alarm panel is located near the main entrance to the facility. Each facility fire detection and alarm subsystem is based upon the hazards located within the building where it is installed.

The most common detector type used is smoke detection, either photoelectric or ionization. Fire detection components are selected based on the fire hazards in each fire area, testing and maintenance requirements, and reliability. Fire detection in the moderator control areas utilizes flame detectors; fire detection in the closure rooms utilizes weld-discriminating flame detectors, which can discriminate between a fire and welding activities. The source of power to the fire detection and alarm subsystem is the normal electrical power system, with backup power provided from batteries located within the detection and alarm panels. Table 1.4.3-3 identifies the buildings protected with automatic detection and alarm systems, as well as the type of system installed.

All fire alarm signals, regardless of where they originate in the surface area, are received in the main fire alarm panel located in the Fire, Rescue, and Medical Facility and in the CCCF.

The fire detection and alarm subsystem is designed, installed, and tested in accordance with the requirements identified in NFPA 72.

1.4.3.2.1.4 Fire Barrier Subsystem in Surface Facilities

The fire barrier subsystem provides a means to limit fire propagation and smoke migration to unaffected facility areas and equipment. Passive barriers, in the form of 3-hour fire-rated walls, floors, and ceilings, are located in accordance with the following: NFPA 101; NFPA 221; NFPA 801; *International Building Code 2000* (ICC 2003); and Regulatory Guide 1.189.

Fire barriers consist of those building components that form barriers to either separate facilities into different hazard areas or to provide additional resistance to building bearing or nonbearing members to prevent them from prematurely failing in a fire. The design and materials of the beams, floors, roofs, columns, walls, partitions, fire doors, and fire dampers are in accordance with the *Fire Resistance Directory 2006* (UL 2006a).

Repository building ventilation and exhaust systems are designed such that their interface, control, and usage are accomplished in accordance with NFPA 801, *Standard for Fire Protection for Facilities Handling Radioactive Materials*. Fire and smoke dampers are active devices and their specifications and installation are in accordance with NFPA 90A, *Standard for the Installation of Air-Conditioning and Ventilating Systems*, and include parameters to ensure satisfactory closure performance that addresses the total worst-case differential pressures at the damper under airflow conditions. Ventilation fire dampers are installed in ducts at fire barrier penetrations in accordance with the requirement of NFPA 90A (e.g., 3-hour-rated barrier requires 3-hour fire dampers).

Fire areas are established in the fire hazard analyses. When defining fire areas, the following are considered: location of ITS SSCs, location of potential fires, size of area, and location of building walls or compartments.

Protection of the heating, ventilation, and air-conditioning systems installed in the surface facilities is provided by using fire dampers that limit the spread of fire from one fire area to another. In areas where fire dampers cannot be installed, ducting is enclosed in a fire-rated material or assembly.

To assist in the confinement of radioactive contamination, the building ventilation systems are designed to create pressure gradients that cause air to flow from areas of lesser contamination to areas of potentially greater contamination. The ventilation systems within the confinement areas are enclosed in 3-hour fire barriers, and fire dampers are not installed within the exhaust flow paths. During a fire, fans in the confinement areas continue to operate and maintain a negative pressure. To prevent damage to the ITS high-efficiency particulate air filters in the confinement areas, deluge fire suppression is provided that is actuated by rate-compensated thermal detectors.

1.4.3.2.2 Fire Protection System for the Subsurface Emplacement Area

This section addresses the fire protection of the subsurface facilities. The subsurface fire protection system is composed of the following subsystems:

- Fire suppression subsystem
- Fire detection subsystem
- Fire alarm subsystem
- Fire barrier subsystem.

The fire barrier subsystems are common to both construction and emplacement areas, providing the separation between the operating facility and the subsurface excavation and construction activities (BSC 2007e).

Fire hazards in the emplacement portion of the subsurface facility are very low. Fixed and transient fuel loads are very low. Fixed loading is mostly electrical and instrument cables, and transient loading is mostly the mobile equipment with onboard suppression systems (BSC 2007e). Battery explosion on the transport and emplacement vehicle backup power systems is not considered credible based on proper battery selection to minimize hydrogen off-gassing and battery charging is performed on the surface, off-vehicle, and in well-ventilated areas (BSC 2007e).

The construction subsystems are temporary systems that are removed when a developed section is prepared for emplacement activities and turned over to operations. Fire hazards are significantly greater during construction activities because of higher transient combustible loading. The higher combustible loading exists because of construction equipment, such as the tunnel boring machines, roadheaders, and load-haul-dump underground haulers. This equipment introduces electrical power supply cables, diesel fuel, rubber tires, hydraulic fluids, and general lubricants into the subsurface. Another hazard is the use of blasting materials for excavation activities. Construction explosives will neither be transported through nor stored in the emplacement area (Section 1.3.1.2.7.4) (BSC 2007e).

1.4.3.2.2.1 Fire Suppression Subsystem for Subsurface Emplacement Areas

The fire suppression subsystem delivers fire suppressants as required for hazard protection in specified subsurface facilities. The surface fire water subsystem does not provide water to the

subsurface repository since no fixed fire suppression sprinkler systems are being installed in the subsurface repository.

The fire suppression subsystem for the emplacement area consists of portable fire extinguishers, gaseous fire suppression systems at electrical cabinets in the subsurface alcoves, and preengineered systems on the transport and emplacement vehicle. The electrical enclosures aboard the transport and emplacement vehicle are protected by redundant primary and secondary automatic fire extinguishing systems that detect a fire and then discharge inside the electrical enclosure to extinguish fires caused by electrical shorts or arcing (BSC 2007e). The onboard systems are activated automatically. Extinguishers are located in the main access tunnels only, and they are procured in accordance with NFPA 10 and 29 CFR Part 1910. The fire suppression system aboard the mobile emplacement equipment is designed and installed in accordance with NFPA 2001, *Standard on Clean Agent Fire Extinguishing Systems*.

1.4.3.2.2.2 Fire Detection and Alarm Subsystems for Subsurface Emplacement Area

The fire detection and alarm subsystems detect fires or fire by-products to activate a fire alarm in the subsurface emplacement area (BSC 2007e).

The fire detection components consist of smoke detectors at each electrical load center and in the observation–performance confirmation drift and test alcove located underneath Panel 1 Emplacement Drift 3 (BSC 2007e).

Detection signals are transmitted to the local fire alarm panels located in each subsurface fire zone. The detectors are selected and installed in accordance with NFPA 72.

The primary function of the fire alarm subsystem is to provide a means for occupant notification of fire conditions in affected subsurface facility areas. A secondary function is to provide the means to collect and transmit fire protection signals from fire protection equipment at a hazard location to the main fire alarm panel in the Fire, Rescue and Medical Facility (Area 63A) and the CCCF (Area 240) (BSC 2007e).

The fire alarm components consist of local fire alarm panels, which control the detectors, system actuators, indication devices, annunciators, and notification devices. All fire alarm signals, regardless of where they originate in the subsurface area, are received in the main fire alarm panel located in the Fire, Rescue, and Medical Facility. The main fire alarm panel transmits a signal to the CCCF (BSC 2007e). The fire alarm subsystem is designed and installed in accordance with NFPA 72.

1.4.3.2.2.3 Fire Barrier Subsystem in the Subsurface

The fire barrier subsystem provides the means to limit fire propagation and smoke migration to unaffected areas and equipment, ventilation system separation, and safeguards and security barriers (BSC 2007e).

The fire barrier subsystem consists of 3-hour fire-rated barriers (BSC 2007e) that separate the operating facility from the excavation and construction activities. These barriers function as

ventilation separators. Barriers between construction and repository operations are equipped with personnel doors. The fire barrier subsystem is designed and installed in accordance with NFPA 221. Section 1.3.5.1.3.2 provides details of the isolation barriers.

1.4.3.2.2.4 Subsurface Layout Description

The subsurface repository is developed in a series of panels. For fire hazard analysis and fire protection design and planning purposes, each panel is defined as bounding a unique, separate fire zone within the emplacement fire area. The existing North Ramp is included with the Panel 1 fire zone, and the existing South Ramp is included with the Panel 2 fire zone. The North Construction Ramp is included with the Panel 3 fire zone. In addition, the observation drift located below Panel 1, which is used for performance confirmation, is designated as a separate fire zone (BSC 2007e).

Fire Area Descriptions—Fire area boundaries are a function of the subsurface repository construction chronology. During the development phase, there will be one fire area, based on the U.S. Nuclear Regulatory Commission definition of a fire area (Regulatory Guide 1.189, Section 4.1.2.1). When waste emplacement begins, there are two fire areas. One is the development fire area; the other is the emplacement fire area. These two fire areas are physically separated by ventilation-isolation barriers that are 3-hour fire rated. The ventilation-isolation barriers serve several functions: isolate the separate ventilation areas, as described in Section 1.3.5; provide a fire barrier between the emplacement and development areas; and permit egress from either area into the other in the event of an emergency. Finally, after completion of development, the subsurface reverts to one fire area after the ventilation barriers are removed (BSC 2007e).

The ventilation-isolation barriers at the development or emplacement fire area interface have a 3-hour fire-resistance rating, with equivalently rated openings and penetration seals. The development and emplacement fire areas are considered as separate and distinct fire areas. The effects of fire from one fire area to the other are addressed by the barrier design requirements (BSC 2007e).

1.4.3.2.2.5 Subsurface Life Safety Considerations

Life safety provisions are addressed in the design of the subsurface repository (BSC 2007e). The emplacement fire areas are classified for occupancy (BSC 2007e).

Means of Egress Features—Several exit points, from a fire hazard or other emergency, are available to personnel working in the emplacement area of the repository. These include (BSC 2007e):

- The North Portal
- The designated ventilation intake shafts
- The South Portal
- The North Construction Portal.

Egress routes change over time with each expansion of the emplacement area. The emergency action plan will be developed and revised as needed to reflect construction and operation activities (BSC 2007e).

Emergency refuge stations will be designed and located at strategic locations in the subsurface as required to maintain a safe means of egress (BSC 2007e).

Marking of the Means of Egress—The illumination and marking of the repository means of egress are in accordance with 29 CFR 1910.37(b), which requires that exits and access to exits be marked by readily visible illuminated signs (BSC 2007e).

Evacuation Time—Evacuation time is the entire span of time that elapses from the ignition of a fire or other emergency until an individual arrives at a safe location. Evacuation time is a combination of delay time and travel time (BSC 2007e).

A subsurface-wide alarm subsystem warns personnel of potential emergencies and hazards (BSC 2007e).

The personnel who are required to work in subsurface operations are provided with the training and personal protective equipment necessary to enable them to evacuate the subsurface repository or to reach a place of safety. Emergency refuge stations are to be provided at strategic locations in the subsurface (BSC 2007e).

Personal Respiratory Protection—Subsurface personnel carry and are trained in the use of personal respiratory protection. Two types of protection are available: the standard self-rescuer and the self-contained, oxygen-generating self-rescuer (BSC 2007e).

The standard self-rescuer is suitable for escape from fire where there is sufficient oxygen. These units remove carbon monoxide generated in a fire (BSC 2007e).

The self-contained, oxygen-generating self-rescuers are rated for use in moderate to heavy working conditions by the National Institute for Occupational Safety and Health, Mine Safety and Health Administration. They include eye goggles, which make movement in smoke possible. The self-contained, oxygen-generating self-rescuers give personnel the means to walk out or get to emergency refuge stations, and they also provide protection against exposure to other harmful gases that may be present besides carbon monoxide (BSC 2007e).

1.4.3.3 Operational Processes

[NUREG-1804, Section 2.1.1.2.3: AC 6]

1.4.3.3.1 Surface Fire Protection

Fire Water Subsystem—Raw water is supplied to each fire water storage tank from the raw water subsystem. The normal power subsystem provides power to each electrically driven fire pump and jockey pump, as well as to each fire pump controller. The fire water subsystem interfaces with each fire suppression subsystem located in every protected facility by providing

water at sufficient pressure and volume to meet the demand and duration of each suppression system and fire hydrant.

Fire Suppression Subsystem—The fire suppression subsystems receive water from the fire water subsystem through interfaces in each protected facility. Drains are installed as part of each suppression subsystem to allow each subsystem to be periodically tested or drained for maintenance of the subsystem or to replace components.

Fire Detection and Alarm Subsystems—Upon detection of a fire or fire by-products by a detector, or upon actuation of a manual pull station, the fire detection subsystem actuates local audible and visual alarm indicators. The fire detection subsystems associated with preaction fire suppression systems upon detection of a fire or fire by-products will enable the first permissive, opening the valve to allow water to flow when sprinklers open.

The fire alarm subsystems are capable of annunciating and indicating supervisory signals, trouble signals, or alarm signals. Upon detection of a fire, signals are sent to the facility fire alarm panel located in each facility with fire detection systems. The facility fire alarm panel has a graphic display that permits emergency responders to identify the location of the alarm and to respond accordingly. Signals from the facility fire alarm panel are sent to the main fire alarm panel located in the Fire, Rescue, and Medical Facility. The main fire alarm panel then sends the signals to the CCCF. Alarm signals are transmitted to the main fire alarm panel located in the Fire, Rescue, and Medical Facility (Area 63A), even under circuit fault conditions.

Fire Barrier Subsystem—In the event a fire occurs within the boundaries of a fire-rated enclosure, it is contained within the enclosure. Most components of the barriers are of passive, fire-rated construction materials installed to withstand the heat and duration of a fire. Openings in these barriers are protected by the installation of fire-rated doors, where electrical and piping components penetrate the barriers, the penetrations are sealed with fire-rated materials; and where duct penetrates the barrier, fire dampers are installed.

1.4.3.3.2 Subsurface Fire Protection

Fire Suppression Subsystem—The electrical and control systems located on the waste package transport and emplacement vehicle are protected by redundant automatic fire extinguishing systems (BSC 2007e). Electrical enclosures in the subsurface alcoves are protected with gaseous fire suppression systems in accordance with NFPA 2001, *Standard on Clean Agent Fire Extinguishing Systems*. Manually operated portable fire extinguishers in nonemplacement areas are also provided. Upon detection of a fire, personnel can extinguish a fire in its incipient stage using the portable extinguishers (BSC 2007e).

Fire Detection and Alarm Subsystems—Upon detection of a fire or fire by-products, the subsystems automatically actuates a local audible alarm and visual indicators (BSC 2007e). The fire detection subsystem receives its primary power from the normal alternating current electrical power system, but internal batteries provide backup power to the fire detection panels.

Upon detection of a fire, trouble and fire alarm signals are sent to the main fire alarm panel located in the Fire, Rescue, and Medical Facility. The main fire alarm panel then sends signals to the CCCF.

The main fire alarm panel has a graphic display that permits operators to identify the location of the alarm and to respond accordingly. Alarm signals are transmitted to the main fire alarm panel even under circuit fault conditions.

The suppression subsystem aboard emplacement equipment contains activation alarms that are transmitted wirelessly to the synchronous optical network (BSC 2007e). The synchronous optical network system transmits these fire alarm signals to the main fire alarm panel in the Fire, Rescue, and Medical Facility. Signals are sent from the main fire alarm panel to the CCCF (BSC 2007e).

Fire Barrier Subsystem—The primary function of the subsurface fire barriers is to separate any construction activities from the emplacement side of the ventilation system (BSC 2007e). Physical separation also provides the means to provide different ventilation systems to each activity. The emplacement side ventilation system operates at negative pressure, while the development area ventilation system operates at positive pressure. This pressure differential ensures that if leakage occurs, it will be into the emplacement side of the repository, not out from it. Section 1.3.5 provides a description of the subsurface ventilation system. The alarm subsystem provides the means to collect and transmit fire protection signals. Another operating feature of the subsurface fire barriers is to function as safeguards and security barriers. Barriers between development and repository operations will be equipped with man doors (BSC 2007e).

1.4.3.4 Design Codes and Standards

[NUREG-1804, Section 2.1.1.7.3.3(I): AC 1(1)]

The codes and standards applicable to the design of the fire protection system are listed below:

- *International Building Code 2000* (ICC 2003)
- IEEE Std 383-2003, *IEEE Standard for Qualifying Class IE Electric Cables and Field Splices for Nuclear Power Generating Stations*
- IEEE Std 1202-2006, *IEEE Standard for Flame-Propagation Testing of Wire and Cable*
- NFPA 10, *Standard for Portable Fire Extinguishers*
- NFPA 13, *Standard for the Installation of Sprinkler Systems*
- NFPA 14, *Standard for the Installation of Standpipe and Hose Systems*
- NFPA 15, *Standard for Water Spray Fixed Systems for Fire Protection*
- NFPA 20, *Standard for the Installation of Stationary Pumps for Fire Protection*
- NFPA 22, *Standard for Water Tanks for Private Fire Protection*
- NFPA 24, *Standard for the Installation of Private Fire Service Mains and Their Appurtenances*

- NFPA 30, *Flammable and Combustible Liquids Code*
- NFPA 70, *National Electrical Code*
- NFPA 72, *National Fire Alarm Code*
- NFPA 90A, *Standard for the Installation of Air-Conditioning and Ventilating Systems*
- NFPA 101, *Life Safety Code*
- NFPA 221, *Standard for High Challenge Fire Walls, Fire Walls, and Fire Barrier Walls*
- NFPA 801, *Standard for Fire Protection for Facilities Handling Radioactive Materials.* 2003 Edition
- NFPA 2001, *Standard on Clean Agent Fire Extinguishing Systems*.

Guidance provided in Regulatory Guide 1.189, *Fire Protection for Operating Nuclear Power Plants*, is used to the extent that it applies to the fire protection system.

The fire protection system will be inspected, tested, and maintained in accordance with the requirements of:

- NFPA 25, *Standard for the Inspection, Testing, and Maintenance of Water-Based Fire Protection Systems*
- NFPA 2001, *Standard on Clean Agent Fire Extinguishing Systems*.

Components and materials for the fire protection system are listed on the following directories, the editions current at the time of procurement:

- *Approval Guide, A Guide to Equipment, Materials and Services FM Approved for Property Conservation* (FM Approvals 2006)
- Underwriters Laboratories *Fire Protection Equipment Directory* (UL 2006b).

1.4.3.5 Fire Protection Program

[NUREG-1804, Section 2.1.1.2.3: AC 1(4)]

To protect workers, the public, and the environment from the consequences of hazardous events associated with fires during operations and construction, a fire protection program will be developed. The fire protection program will be in accordance with the applicable guidance provided in Regulatory Guide 1.189.

1.4.3.5.1 Purpose

The fire protection program delineates comprehensive programmatic requirements for the design, construction, and operation of the repository facilities sufficient to minimize the potential for:

- The occurrence of a fire or related event
- Onsite or offsite release of radioactive or hazardous material and impacts on human safety
- Important process controls and ITS and ITWI SSCs being damaged
- Vital programs suffering unacceptable interruptions
- Property losses.

Fire protection capability is provided to minimize losses from fire and related hazards. The system design, programs, and procedures consider the site-specific location, and unique aspects of handling spent nuclear fuel and high-level radioactive waste, and expected construction coincident with operation to provide a multiple methods of protection approach to fire protection. This multiple methods of protection principle is aimed at:

- Preventing fires from starting

- Detecting, controlling, and extinguishing promptly those fires that do occur

- Providing protection for ITS SSCs such that a fire that is not promptly extinguished by fire suppression will not result in adverse plant operational conditions.

1.4.3.5.2 Organization

The overall responsibility for fire protection during construction and operations is assigned to the Site Operations Manager (Section 5.3). Personnel who are trained and experienced in the field of fire protection implementation assist this manager.

Prior to the start of waste handling operations, a fire and rescue organization, reporting to the Emergency Preparedness Manager (Section 5.3), is planned to assume the site responsibilities for fire prevention and protection.

1.4.3.5.3 Qualifications for Fire Protection during Operations

The personnel responsible for inspections, testing, and maintenance of fire protection systems are qualified by training and experience for such work and trained, as appropriate, under the programs described in Section 5.3.3. Additionally, personnel are certified, as required, for specific systems, components, or both.

Qualification for the fire and rescue organization personnel will use the methods and practices of the applicable NFPA codes and standards, such as NFPA 1001, NFPA 1021, and NFPA 1031, as a minimum.

Operations personnel will be provided for observation and control of fire hazards associated with hot work or act as compensatory measures for degraded fire protection systems and features.

Specific training will be given for personnel to include identification of potential fire hazards and hands-on training with extinguishing equipment.

The fire protection engineers are prepared by training and experience in fire protection to enable a comprehensive approach in conducting the fire protection program and fire protection engineering activities for both nuclear and nonnuclear facilities. A qualified fire protection engineer complies with the definition in DOE-STD-1066-99, *Fire Protection Design Criteria*, Section 4, and/or Regulatory Guide 1.189, *Fire Protection for Operating Nuclear Power Plants*, Section 1.6, as applicable to the engineer's duties and responsibilities.

Repository personnel are responsible for the prevention and detection of fires. General employee training provides personnel with basic fire safety training.

1.4.3.5.4 System Design

Based on the fire hazard analyses performed for the fire areas in the surface and subsurface facilities, fire protection features are included in the design of the facilities. These fire protection features reduce the likelihood that a fire initiates, ensure that any fire initiated is restricted to one fire area, and ensure that a fire does not result in an onsite or offsite release of radioactive material. Section 1.4.3.2 describes these fire protection features. These fire protection features, along with the administrative programs to be developed as part of the fire protection program, provide the defense-in-depth approach to fire protection.

1.4.3.5.5 Inspection, Testing, and Maintenance

An inspection, testing, and maintenance program will be implemented to ensure that fire protection systems and equipment remain operable and function properly when needed to detect and suppress fire. The fire protection inspection, testing, and maintenance program will meet the requirements of:

- NFPA 25, *Standard for the Inspection, Testing, and Maintenance of Water-Based Fire Protection Systems*
- NFPA 2001, *Standard on Clean Agent Fire Extinguishing Systems*.

1.4.3.5.6 Operability Requirements, Impairments, and Compensatory Measures

Operability requirements will ensure that fire protection, detection, and life safety systems are maintained in operational readiness. These requirements will be provided for automatic and manual fire suppression systems, suppression supply systems, fire alarm and notification systems, passive fire protection systems, and life safety systems. Through administrative controls of these operability requirements, adequate detection, suppression, and confinement capabilities will be ensured such that equipment will perform its intended function and the effects of a fire are minimized.

SSCs that are relied upon in the fire protection program will have operability assessments and prompt compensatory measures/corrective actions when impairments (i.e., inoperable, degraded, or nonconforming conditions) are identified. The process of ensuring operability consists of

verification of operability by surveillance activities and formal determinations of operability whenever verification or other indication calls into question the ability of an SSC to perform its specified function. If an immediate threat to the public health and safety is identified, action to place the facility in a safe condition begins immediately.

Compensatory measures may be used as an interim step to restore operability or to enhance the capability of fire protection system SSCs that are degraded or nonconforming until the final corrective action is completed. Reliance on compensatory measures will be considered in establishing a reasonable time frame to complete the corrective action process. Conditions that require compensatory measures to restore or enhance operability are resolved more promptly than conditions that are not dependent upon compensatory measures. The compensatory measures selected will be appropriate to the adverse condition identified and will not degrade any safety function nor introduce unintended consequences.

1.4.3.5.7 Fire Prevention

Administrative controls will be used to maintain the performance of the fire protection systems and delineate the responsibilities of personnel with respect to fire safety. The primary fire safety administrative controls will be those that relate to fire prevention. These fire prevention controls, in the form of procedures, will control the storage and use of combustible materials and the use of ignition sources.

1.4.3.5.8 Emergency Response

Fire alarms are received at the main fire alarm panel in the Fire, Rescue, and Medical Facility. The main fire alarm panel also transmits a signal to the CCCF. Based on the fire alarms, the fire and rescue organization, operations department, and security department provide the necessary emergency response. Pre-fire plans will be established to provide the location of fire protection equipment, approach paths for fire response, potential hazards in the area, power supply and ventilation isolation methods, important equipment in the area, and other information necessary for fire emergency response personnel. The fire and rescue organization will have the capability to respond in a timely and effective manner both for surface and subsurface fires and other emergencies. The permanent fire and rescue organization personnel may be supplemented as needed based on pre-fire plans by operations personnel trained in fire-fighting methods. Supervisory staff in the CCCF ensure that ongoing operations do not impede fire response.

To provide additional fire-related emergency response capability, interface agreements with state and local emergency services will be included in the Emergency Plan (Section 5.7).

1.4.3.6 General References

BSC (Bechtel SAIC Company) 2007a. *Canister Receipt and Closure Facility 1 Fire Hazard Analysis*. 060-M0A-FP00-00100-000-00B. Las Vegas, Nevada: Bechtel SAIC Company. ACC: ENG.20071129.0032.

BSC 2007b. *Receipt Facility Fire Hazard Analysis*. 200-M0A-FP00-00100-000-00A. Las Vegas, Nevada: Bechtel SAIC Company. ACC: ENG.20070823.0001.

BSC 2007c. *Emergency Diesel Generator Facility Fire Hazard Analysis*. 26D-M0A-FP00-00100-000-00A. Las Vegas, Nevada: Bechtel SAIC Company. ACC: ENG.20070329.0010.

BSC 2007d. *Site Fire Hazard Analysis*. 000-M0A-FP00-00200-000-00A. Las Vegas, Nevada: Bechtel SAIC Company. ACC: ENG.20070814.0003.

BSC 2007e. *Subsurface Repository Fire Hazard Analysis*. 800-M0A-FP00-00100-000-00A. Las Vegas, Nevada: Bechtel SAIC Company. ACC: ENG.20070928.0001.

BSC 2007f. *Central Control Center Facility Fire Hazard Analysis*. 240-M0A-FP00-00100-000-00A. Las Vegas, Nevada: Bechtel SAIC Company. ACC: ENG.20070612.0002.

BSC 2007g. *Project Design Criteria Document*. 000-3DR-MGR0-00100-000-007. Las Vegas, Nevada: Bechtel SAIC Company. ACC: ENG.20071016.0005.BSC 2008a. *Initial Handling Facility Fire Hazard Analysis*. 51A-M0A-FP00-00100-000-00C. Las Vegas, Nevada: Bechtel SAIC Company. ACC: ENG.20080212.0007.

BSC 2008b. *Wet Handling Facility Fire Hazard Analysis*. 050-M0A-FP00-00100-000-00C. Las Vegas, Nevada: Bechtel SAIC Company. ACC: ENG.20080213.0001.

DOE (U.S. Department of Energy) 2008. *Transportation, Aging and Disposal Canister System Performance Specification*. WMO-TADCS-000001, Rev. 1 ICN1. Washington, D.C.: U.S. Department of Energy, Office of Civilian Radioactive Waste Management. ACC: DOC.20080331.0001.

DOE-STD-1066-99. 1999. *Fire Protection Design Criteria*. Washington, D.C.: U.S. Department of Energy. TIC: 249984.

FM Approvals 2006. *Approval Guide, A Guide to Equipment, Materials and Services FM Approved for Property Conservation*. Norwood, Massachusetts: FM Global Group, FM Approvals. TIC: 258092.

ICC (International Code Council) 2003. *International Building Code 2000*. Falls Church, Virginia: International Code Council. TIC: 251054; 257198.

IEEE Std 383-2003. 2004. *IEEE Standard for Qualifying Class 1E Electric Cables and Field Splices for Nuclear Power Generating Stations*. New York, New York: Institute of Electrical and Electronics Engineers. TIC: 256201.

IEEE Std 1202-2006. *IEEE Standard for Flame-Propagation Testing of Wire and Cable*. New York, New York: Institute of Electrical and Electronics Engineers. TIC: 258697.

NFPA 10. 2006. *Standard for Portable Fire Extinguishers.* 2007 Edition. Quincy, Massachusetts: National Fire Protection Association. TIC: 258708.

NFPA 13. 2006. *Standard for the Installation of Sprinkler Systems*. 2007 Edition. Quincy, Massachusetts: National Fire Protection Association. TIC: 258713.

NFPA 14. 2006. *Standard for the Installation of Standpipe and Hose Systems*. 2007 Edition. Quincy, Massachusetts: National Fire Protection Association. TIC: 258714.

NFPA 15. 2006. *Standard for Water Spray Fixed Systems for Fire Protection.* 2007 Edition. Quincy, Massachusetts: National Fire Protection Association. TIC: 258715.

NFPA 20. 2006. *Standard for the Installation of Stationary Pumps for Fire Protection*. 2007 Edition. Quincy, Massachusetts: National Fire Protection Association. TIC: 258716.

NFPA 22. 2003. *Standard for Water Tanks for Private Fire Protection.* 2003 Edition. Quincy, Massachusetts: National Fire Protection Association. TIC: 254860.

NFPA 24. 2006. *Standard for the Installation of Private Fire Service Mains and Their Appurtenances.* 2007 Edition. Quincy, Massachusetts: National Fire Protection Association. TIC: 258718.

NFPA 25. 2002. *Standard for the Inspection, Testing, and Maintenance of Water-Based Fire Protection Systems*. 2002 Edition. Quincy, Massachusetts: National Fire Protection Association. TIC: 253684.

NFPA 30. 2006. *Flammable and Combustible Liquids Code*. 2003 Edition. Quincy, Massachusetts: National Fire Protection Association. TIC: 258720.

NFPA 70. 2005. *National Electrical Code, with Tentative Interim Amendment.* 2005 Edition. Quincy, Massachusetts: National Fire Protection Association. TIC: 258735.

NFPA 72. 2006. *National Fire Alarm Code*. 2007 Edition. Quincy, Massachusetts: National Fire Protection Association. TIC: 258740.

NFPA 90A. 2005. *Standard for the Installation of Air-Conditioning and Ventilating Systems*. 2002 Edition. Quincy, Massachusetts: National Fire Protection Association. TIC: 258045.

NFPA 101. 2006. *Life Safety Code*. 2006 Edition. Quincy, Massachusetts: National Fire Protection Association. TIC: 258709.

NFPA 221. 2005. *Standard for High Challenge Fire Walls, Fire Walls, and Fire Barrier Walls.* 2006 Edition. Quincy, Massachusetts: National Fire Protection Association. TIC: 258552.

NFPA 801. 2003. *Standard for Fire Protection for Facilities Handling Radioactive Materials*. 2003 Edition. Quincy, Massachusetts: National Fire Protection Association. TIC: 254811.

NFPA 1001. 2007. *Standard for Fire Fighter Professional Qualifications*. Quincy, Massachusetts: National Fire Protection Association. TIC: 259881.

NFPA 1021. 2003. *Standard for Fire Office Professional Qualifications*. Quincy, Massachusetts: National Fire Protection Association. TIC: 259882.

NFPA 1031. 2003. *Standard for Professional Qualifications for Fire Inspector and Plan Examiner.* Quincy, Massachusetts: National Fire Protection Association. TIC: 259883.

NFPA 2001. 2007. *Standard on Clean Agent Fire Extinguishing Systems*. 2008 Edition. Quincy, Massachusetts: National Fire Protection Association. TIC: 259763.

Regulatory Guide 1.189. 2001. *Fire Protection for Operating Nuclear Power Plants*. Washington, D.C.: U.S. Nuclear Regulatory Commission. ACC: MOL.20060105.0191.

UL (Underwriters Laboratories) 2006a. *Fire Resistance Directory 2006*. Northbrook, Illinois: Underwriters Laboratories. TIC: 258745.

UL 2006b. *Fire Protection Equipment Directory 2006*. Northbrook, Illinois: Underwriters Laboratories. TIC: 258762.

INTENTIONALLY LEFT BLANK

Table 1.4.3-1. Automatic Fire Suppression System Types

Facility No.	Building Description	Automatic Suppression System	Standpipe System[a]	Fire Water Loop No.
050	Wet Handling Facility	Preaction Sprinklers and Wet Pipe Sprinklers	Yes	1
060	Canister Receipt and Closure Facility 1	Preaction Sprinklers and Wet Pipe Sprinklers	Yes	1
070	Canister Receipt and Closure Facility 2	Preaction Sprinklers and Wet Pipe Sprinklers	Yes	1
080	Canister Receipt and Closure Facility 3	Preaction Sprinklers and Wet Pipe Sprinklers	Yes	1
160	Low-Level Waste Facility	Wet Pipe Sprinklers	NA	1
200	Receipt Facility	Preaction Sprinklers and Wet Pipe Sprinklers	Yes	1
220	Heavy Equipment Maintenance Facility	Wet Pipe Sprinklers	NA	1
230	Warehouse and Non-Nuclear Receipt Facility	Wet Pipe Sprinklers	NA	1
240	Central Control Center Facility	Preaction Sprinklers and Wet Pipe Sprinklers	NA	1
25A	Utilities Facility	Wet Pipe Sprinklers	NA	2
26B	Standby Diesel Generator Facility	Wet Pipe Sprinklers	NA	1
26D	Emergency Diesel Generator Facility	Wet Pipe Sprinklers	Yes	1
28A	Fire Water Facility	Wet Pipe Sprinklers	NA	1
28B	Fire Water Facility	Wet Pipe Sprinklers	NA	2
28E	Fire Water Facility	Wet Pipe Sprinklers	NA	1
30A	Central Security Station	Wet Pipe Sprinklers	NA	2
30B	Cask Receipt Security Station	Wet Pipe Sprinklers	NA	1
51A	Initial Handling Facility	Preaction Sprinklers and Wet Pipe Sprinklers	Yes	1
620	Administration Facility	Wet Pipe Sprinklers	NA	2
63A	Fire, Rescue, and Medical Facility	Wet Pipe Sprinklers	NA	2
68A	Warehouse/Central Receiving	Wet Pipe Sprinklers	NA	2
690	Vehicle Maintenance and Motor Pool	Wet Pipe Sprinklers	NA	2

Table 1.4.3-1. Automatic Fire Suppression System Types (Continued)

Facility No.	Building Description	Automatic Suppression System	Standpipe System[a]	Fire Water Loop No.
71A	Craft Shops	Wet Pipe Sprinklers	NA	2

NOTE: [a]Supply for manual fire suppression system
NA = not applicable.

Table 1.4.3-2. Preclosure Nuclear Safety Design Bases and their Relationship to Design Criteria for the Fire Protection Systems

System or Facility (System Code)	Subsystem or Function (as Applicable)	Component	Nuclear Safety Design Bases		Design Criteria
			Safety Function	Controlling Parameters and Values	
Fire Protection System (FP)	Fire Suppression	Preaction valve, sprinkler heads, and system actuation panels associated with double-interlock preaction suppression systems that protect areas where there is a potential for canister breach	Maintain moderator control	FP.CR.01. The mean probability of inadvertent introduction of fire suppression water into a canister shall be less than or equal to 1×10^{-6} over a 720-hour period following a radionuclide release.	Fire suppression systems and associated detection systems that protect areas where there is potential for breach of a canister are required to be double-interlock preaction systems in accordance with NFPA 13 and NFPA 72 to prevent inadvertent introduction of water.
	Fire Detection	Fire detection system for the ITS preaction valves with associated detectors and control box	Maintain moderator control	FP.CR.02. The mean probability of inadvertent introduction of fire suppression water into a canister shall be less than or equal to 1×10^{-6} over a 720-hour period following a radionuclide release.	Fire suppression systems and associated detection systems that protect areas where there is potential for breach of a canister are required to be double-interlock preaction systems in accordance with NFPA 13 and NFPA 72 to prevent inadvertent introduction of water.
	Fire Suppression	Preaction valves, sprinkler heads, and system actuation panels associated with double-interlock preaction suppression systems that protect areas where there is a potential for canister breach.	Maintain moderator control	FP.WH.01 The mean probability of inadvertent introduction of fire suppression water into a canister shall be less than or equal to 6×10^{-7} over a 720-hour period following a radionuclide release.	Fire suppression systems and associated detection systems that protect areas where there is potential for breach of a canister are required to be double-interlock preaction systems in accordance with NFPA 13 and NFPA 72 to prevent inadvertent introduction of water.

Table 1.4.3-2. Preclosure Nuclear Safety Design Bases and their Relationship to Design Criteria for the Fire Protection Systems (Continued)

System or Facility (System Code)	Subsystem or Function (as Applicable)	Component	Nuclear Safety Design Bases		Design Criteria
			Safety Function	Controlling Parameters and Values	
Fire Protection System (FP) (Continued)	Fire Detection	Fire detection system for the ITS preaction valves with associated detectors and control box	Maintain moderator control	FP.WH.02. The mean probability of inadvertent introduction of fire suppression water into a canister shall be less than or equal to 6×10^{-7} over a 720-hour period following a radionuclide release.	Fire suppression systems and associated detection systems that protect areas where there is potential for breach of a canister are required to be double-interlock preaction systems in accordance with NFPA 13 and NFPA 72 to prevent inadvertent introduction of water.

NOTE: For casks, canisters, and associated handling equipment that were previously designed, the component design will be evaluated to confirm that the controlling parameters and values are met.
Facility Codes: CR: Canister Receipt and Closure Facility; WH: Wet Handling Facility.
Infrastructure System Codes: FP: Fire Protection.

Table 1.4.3-3. Detection System

Facility No.	Description	Detection System Type[a]
050	Wet Handling Facility	Smoke Detectors[b]
51A	Initial Handling Facility	Smoke Detectors[b]
060	Canister Receipt and Closure Facility 1	Smoke Detectors[b]
070	Canister Receipt and Closure Facility 2	Smoke Detectors[b]
080	Canister Receipt and Closure Facility 3	Smoke Detectors[b]
160	Low-Level Waste Facility	Smoke Detectors
170	Aging Facility Electric Utility Buildings	Smoke Detectors
200	Receipt Facility	Smoke Detectors
220	Heavy Equipment Maintenance Facility	Smoke Detectors
230	Warehouse and Non-Nuclear Receipt Facility	Smoke Detectors
240	Central Control Center Facility	Smoke Detectors
25A	Utilities Facility	Smoke Detectors
26B	Standby Diesel Generator Facility	Smoke Detectors
26D	Emergency Diesel Generator Facility	Smoke Detectors[b]
27B	13.8 kV Switchgear Facility	Smoke Detectors
28A	Fire Water Facility	Smoke Detectors
28B	Fire Water Facility	Smoke Detectors
28E	Fire Water Facility	Smoke Detectors
30A	Central Security Station	Smoke Detectors
30B	Cask Receipt Security Station	Smoke Detectors
30C	North Perimeter Security Station	Smoke Detectors
620	Administration Facility	Smoke Detectors
63A	Fire, Rescue, and Medical Facility (Operations)	Smoke Detectors
68A	Warehouse/Central Receiving	Smoke Detectors

Table 1.4.3-3. Detection System (Continued)

Facility No.	Description	Detection System Type[a]
690	Vehicle Maintenance and Motor Pool	Smoke Detectors
71A	Craft Shops	Smoke Detectors

NOTE: [a]Specific smoke detector type will be determined during detailed design.
[b]The detection system within the closure rooms will use weld-discriminating flame detectors, which can discriminate between a fire and welding activities. The detection system within the larger moderator control areas will use flame detectors. The detection system in high airflow rooms of the Emergency Diesel Generator Facility will use flame detectors.
An alarm system is provided through the area protected for fire to monitor all detection devices and to provide local alarm signals and remote alarm signals to the main fire alarm panel.

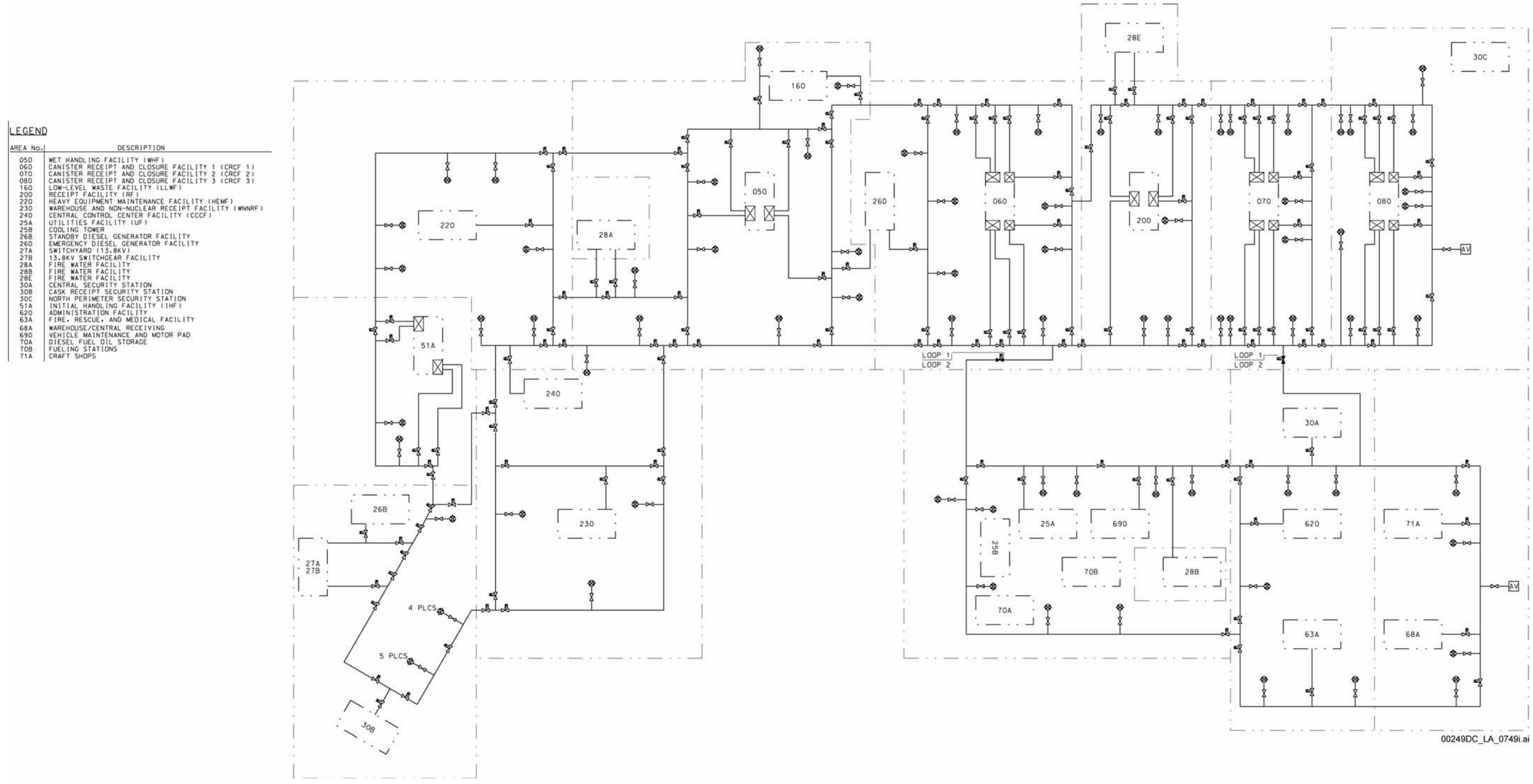

Figure 1.4.3-1. Fire Water Loop 1 and Loop 2 Flow Diagram

INTENTIONALLY LEFT BLANK

This figure has been designated Official Use Only under the Freedom of Information Act (5 U.S.C. 552), Exemption 2, Circumvention of Statute.

This figure is included in Appendix A: Information Designated as Official Use Only, as Figure A-98.

Figure 1.4.3-2. Initial Handling Facility Fire Suppression Coverage—Ground Floor Plan at Elevation +0′ –0″

INTENTIONALLY LEFT BLANK

This figure has been designated Official Use Only under the Freedom of Information Act (5 U.S.C. 552), Exemption 2, Circumvention of Statute.

This figure is included in Appendix A: Information Designated as Official Use Only, as Figure A-99.

Figure 1.4.3-3. Initial Handling Facility Fire Suppression Coverage—Second Floor Plan at Elevation +37′ –0″

INTENTIONALLY LEFT BLANK

This figure has been designated Official Use Only under the Freedom of Information Act (5 U.S.C. 552), Exemption 2, Circumvention of Statute.

This figure is included in Appendix A: Information Designated as Official Use Only, as Figure A-100.

Figure 1.4.3-4. Initial Handling Facility Fire Suppression Coverage—Roof Plan at Elevation +73′ –0″

INTENTIONALLY LEFT BLANK

This figure has been designated Official Use Only under the Freedom of Information Act (5 U.S.C. 552), Exemption 2, Circumvention of Statute.

This figure is included in Appendix A: Information Designated as Official Use Only, as Figure A-101.

Figure 1.4.3-5. Wet Handling Facility—Fire Suppression Coverage—Ground Floor Plan at Elevation 0′ –0″

INTENTIONALLY LEFT BLANK

This figure has been designated Official Use Only under the Freedom of Information Act (5 U.S.C. 552), Exemption 2, Circumvention of Statute.

This figure is included in Appendix A: Information Designated as Official Use Only, as Figure A-102.

Figure 1.4.3-6. Wet Handling Facility—Fire Suppression Coverage—Second Floor Plan at Elevation 40′ –0″

INTENTIONALLY LEFT BLANK

This figure has been designated Official Use Only under the Freedom of Information Act (5 U.S.C. 552), Exemption 2, Circumvention of Statute.

This figure is included in Appendix A: Information Designated as Official Use Only, as Figure A-103.

Figure 1.4.3-7. Wet Handling Facility—Fire Suppression Coverage—Plan below Elevation 40′ –0″

INTENTIONALLY LEFT BLANK

This figure has been designated Official Use Only under the Freedom of Information Act (5 U.S.C. 552), Exemption 2, Circumvention of Statute.

This figure is included in Appendix A: Information Designated as Official Use Only, as Figure A-104.

Figure 1.4.3-8. Wet Handling Facility—Fire Suppression Coverage—Pool Plan at Elevation –52′ –0″

INTENTIONALLY LEFT BLANK

This figure has been designated Official Use Only under the Freedom of Information Act (5 U.S.C. 552), Exemption 2, Circumvention of Statute.

This figure is included in Appendix A: Information Designated as Official Use Only, as Figure A-105.

Figure 1.4.3-9. Receipt Facility Fire Suppression Coverage—Ground Floor Plan at Elevation +0′ –0″

NOTE: HVAC = heating, ventilation, and air-conditioning.

INTENTIONALLY LEFT BLANK

This figure has been designated Official Use Only under the Freedom of Information Act (5 U.S.C. 552), Exemption 2, Circumvention of Statute.

This figure is included in Appendix A: Information Designated as Official Use Only, as Figure A-106.

Figure 1.4.3-10. Receipt Facility Fire Suppression Coverage—Second Floor Plan at Elevation +32′ –0″

NOTE: HVAC = heating, ventilation, and air-conditioning.

INTENTIONALLY LEFT BLANK

This figure has been designated Official Use Only under the Freedom of Information Act (5 U.S.C. 552), Exemption 2, Circumvention of Statute.

This figure is included in Appendix A: Information Designated as Official Use Only, as Figure A-107.

Figure 1.4.3-11. Receipt Facility Fire Suppression Coverage—Third Floor Plan at Elevation +64′ –0″

NOTE: The pullout in the figure above shows the RF partial plan at elevation +76′ –0″.

INTENTIONALLY LEFT BLANK

This figure has been designated Official Use Only under the Freedom of Information Act (5 U.S.C. 552), Exemption 2, Circumvention of Statute.

This figure is included in Appendix A: Information Designated as Official Use Only, as Figure A-108.

Figure 1.4.3-12. Canister Receipt and Closure Facility Fire Suppression Coverage—Ground Floor Plan at Elevation +0′ –0″

NOTE: HVAC = heating, ventilation, and air-conditioning.

INTENTIONALLY LEFT BLANK

This figure has been designated Official Use Only under the Freedom of Information Act (5 U.S.C. 552), Exemption 2, Circumvention of Statute.

This figure is included in Appendix A: Information Designated as Official Use Only, as Figure A-109.

Figure 1.4.3-13. Canister Receipt and Closure Facility Fire Suppression Coverage—Second Floor Plan at Elevation +32′ –0″

NOTE: HVAC = heating, ventilation, and air-conditioning.

INTENTIONALLY LEFT BLANK

This figure has been designated Official Use Only under the Freedom of Information Act (5 U.S.C. 552), Exemption 2, Circumvention of Statute.

This figure is included in Appendix A: Information Designated as Official Use Only, as Figure A-110.

Figure 1.4.3-14. Canister Receipt and Closure Facility Fire Suppression Coverage—Third Floor Plan at Elevation +64′ –0″

INTENTIONALLY LEFT BLANK

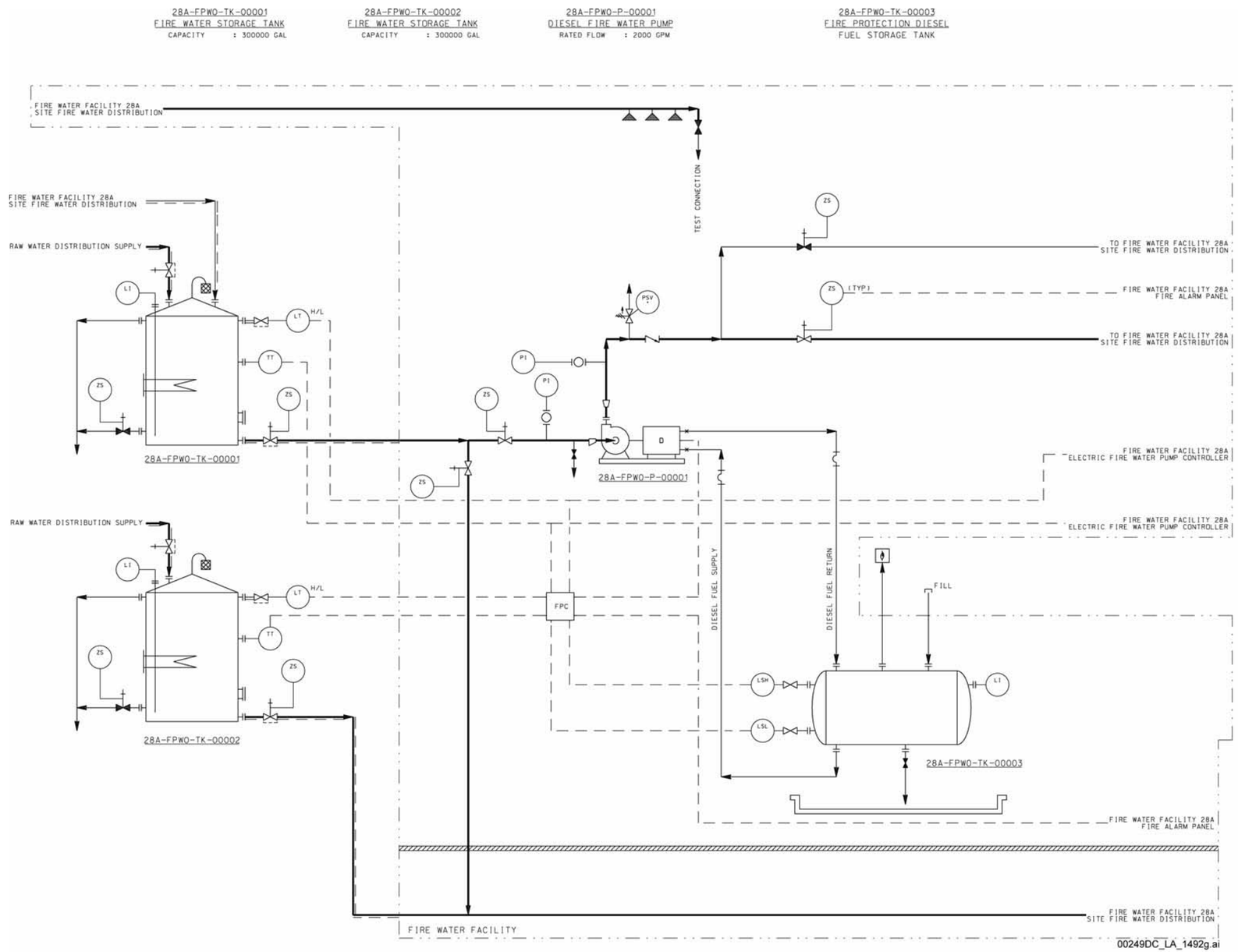

Figure 1.4.3-15. Fire Water Supply Area 28A Fire Water Storage

INTENTIONALLY LEFT BLANK

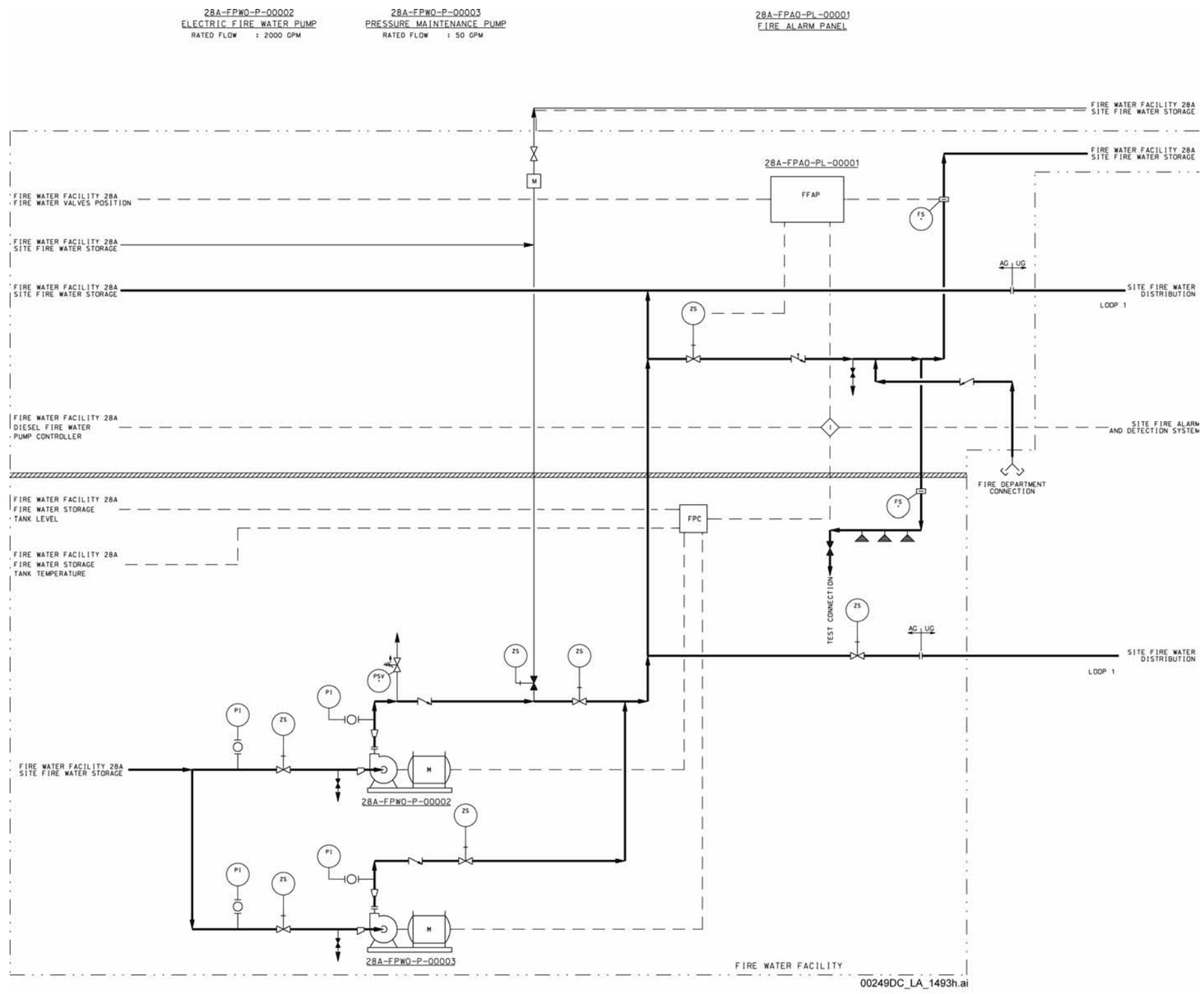

NOTE: AG = aboveground; FFAP = facility fire alarm panel; UG = underground.

Figure 1.4.3-16. Fire Water Supply Area 28A Fire Water Distribution

INTENTIONALLY LEFT BLANK

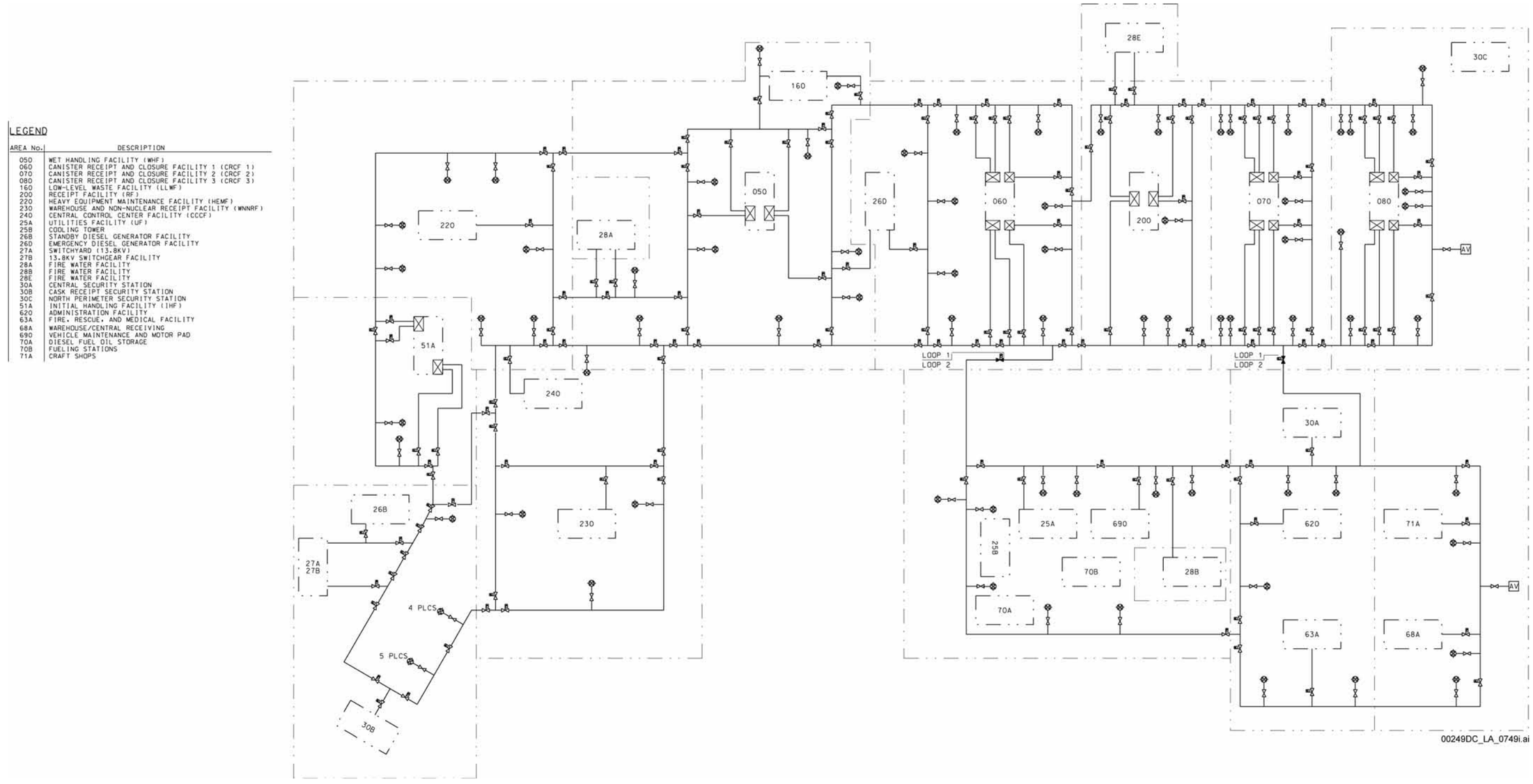

Figure 1.4.3-17. Fire Water Supply Area 28B Fire Water Storage

INTENTIONALLY LEFT BLANK

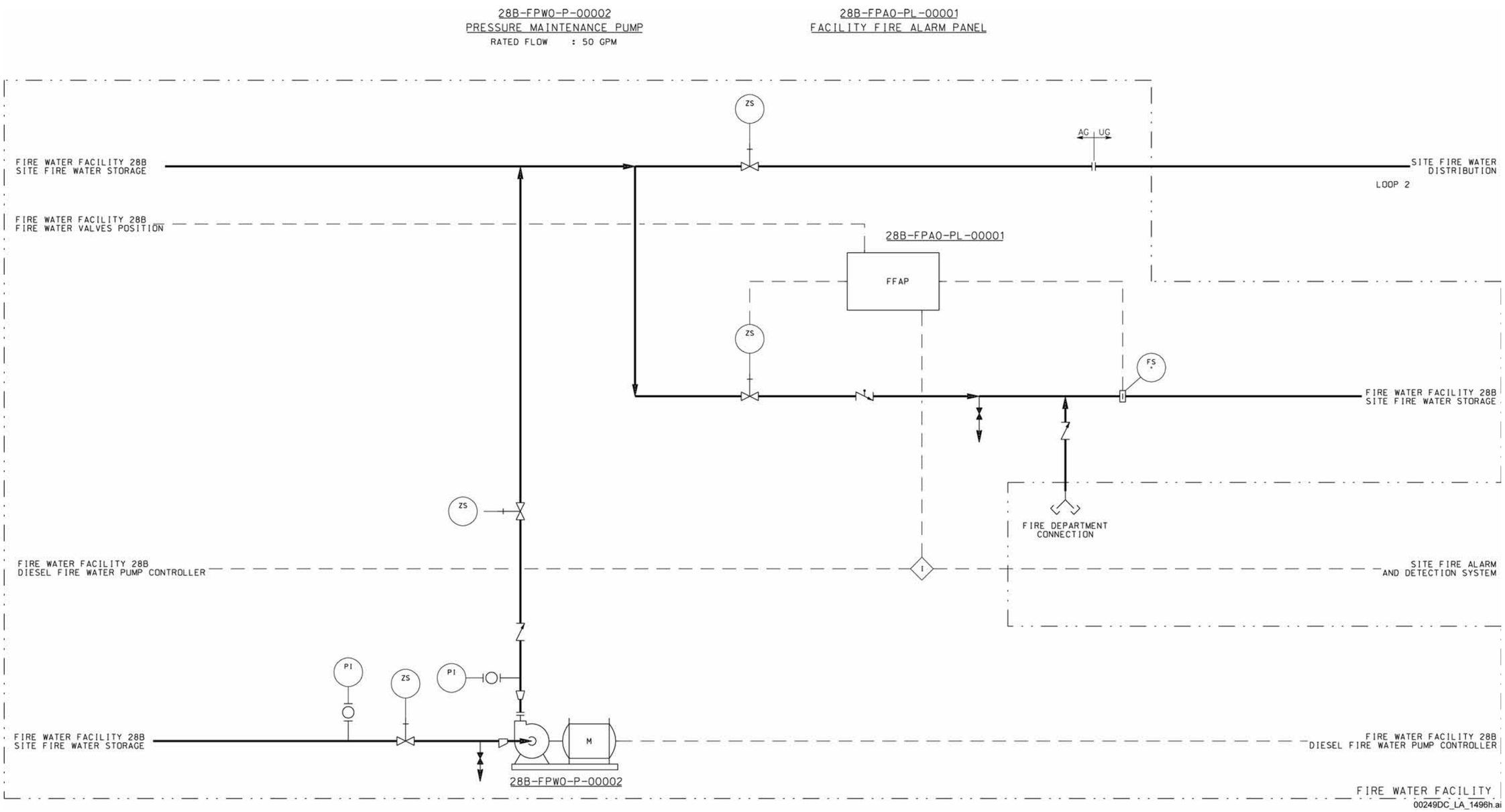

Figure 1.4.3-18. Fire Water Supply Area 28B Fire Water Distribution

NOTE: AG = aboveground; FFAP = facility fire alarm panel; UG = underground.

INTENTIONALLY LEFT BLANK

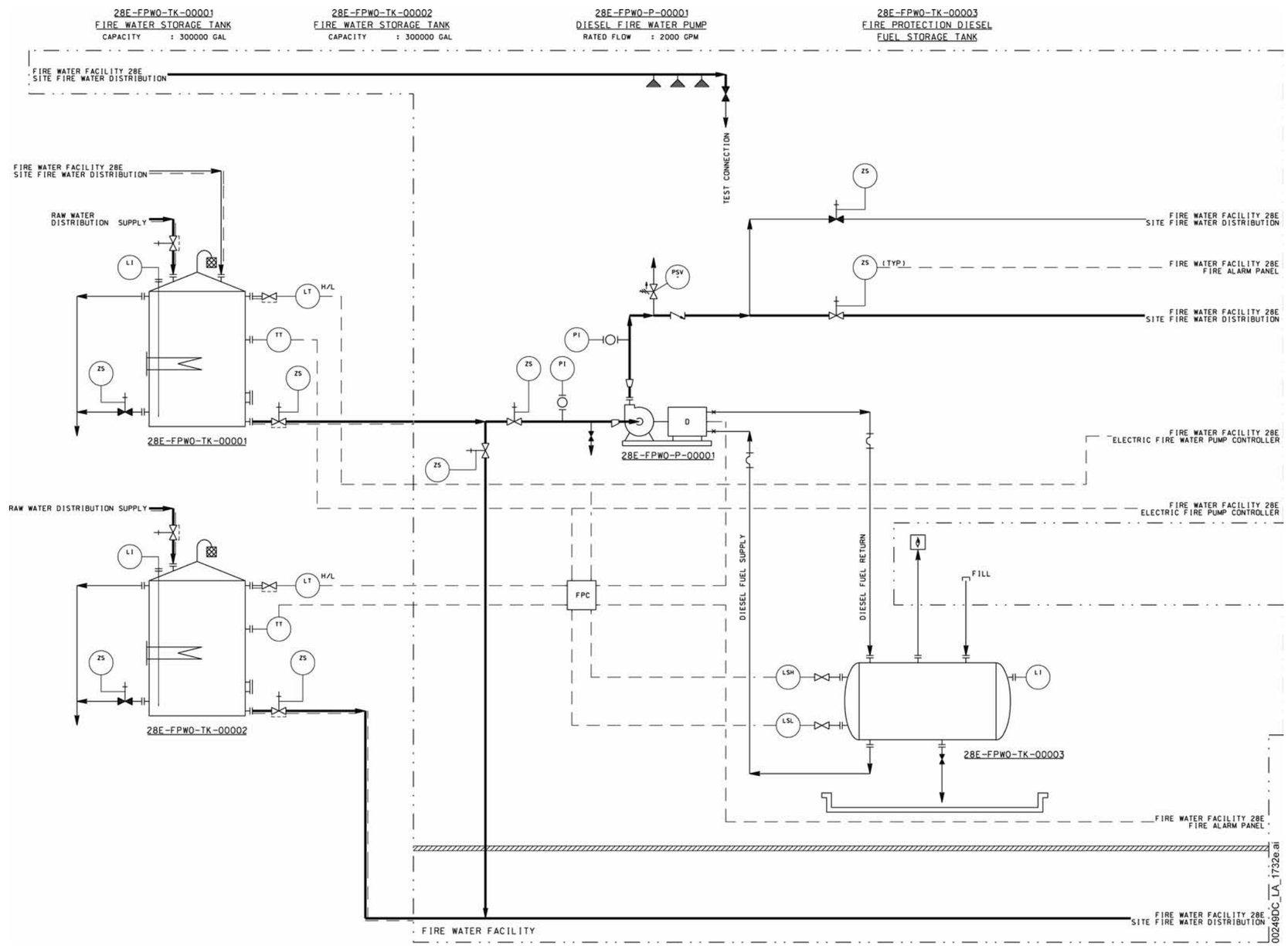

Figure 1.4.3-19. Fire Water Supply Area 28E Fire Water Storage

INTENTIONALLY LEFT BLANK

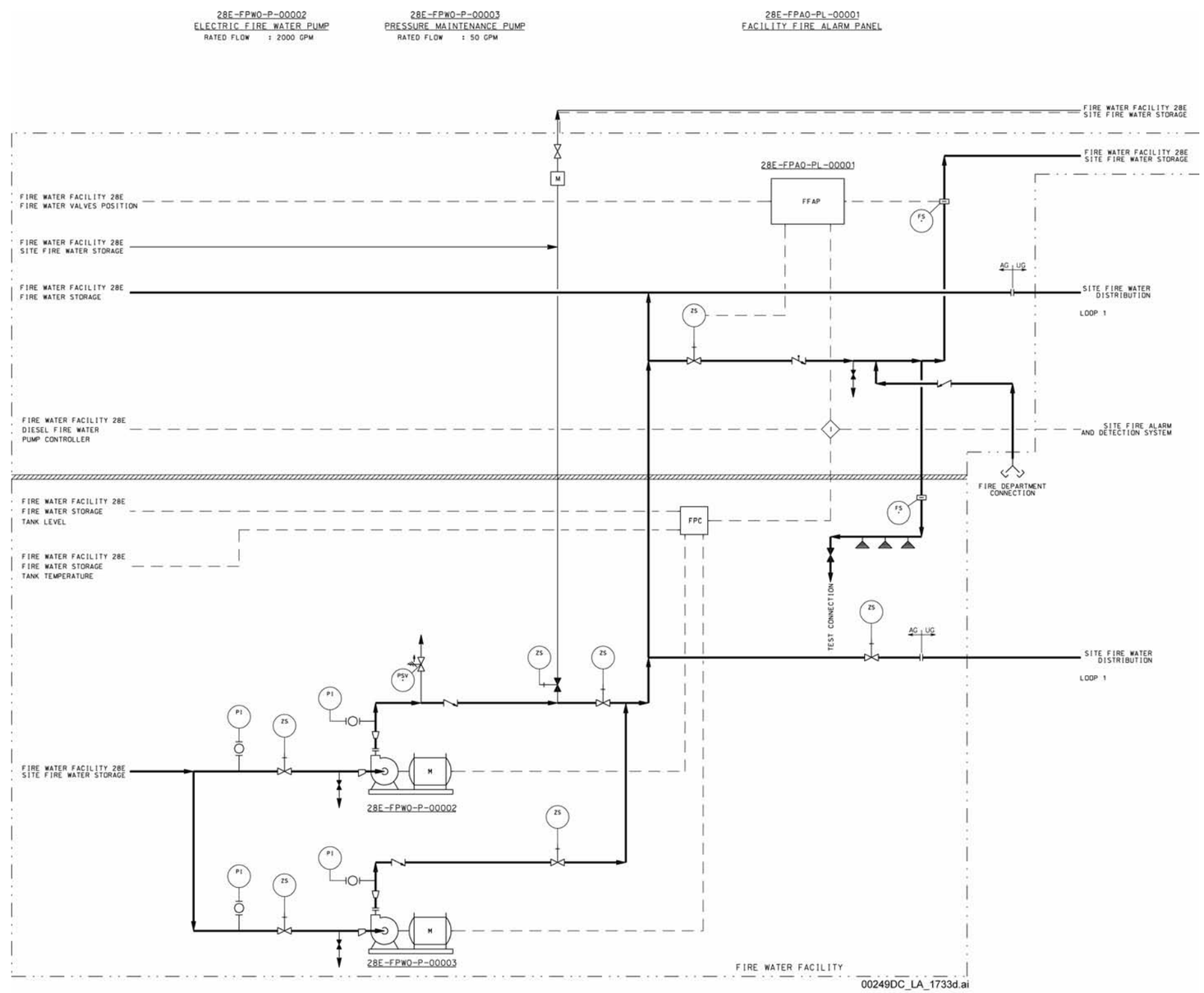

NOTE: AG = aboveground; FFAP = facility fire alarm panel; UG = underground.

Figure 1.4.3-20. Fire Water Supply Area 28E Fire Water Distribution

INTENTIONALLY LEFT BLANK

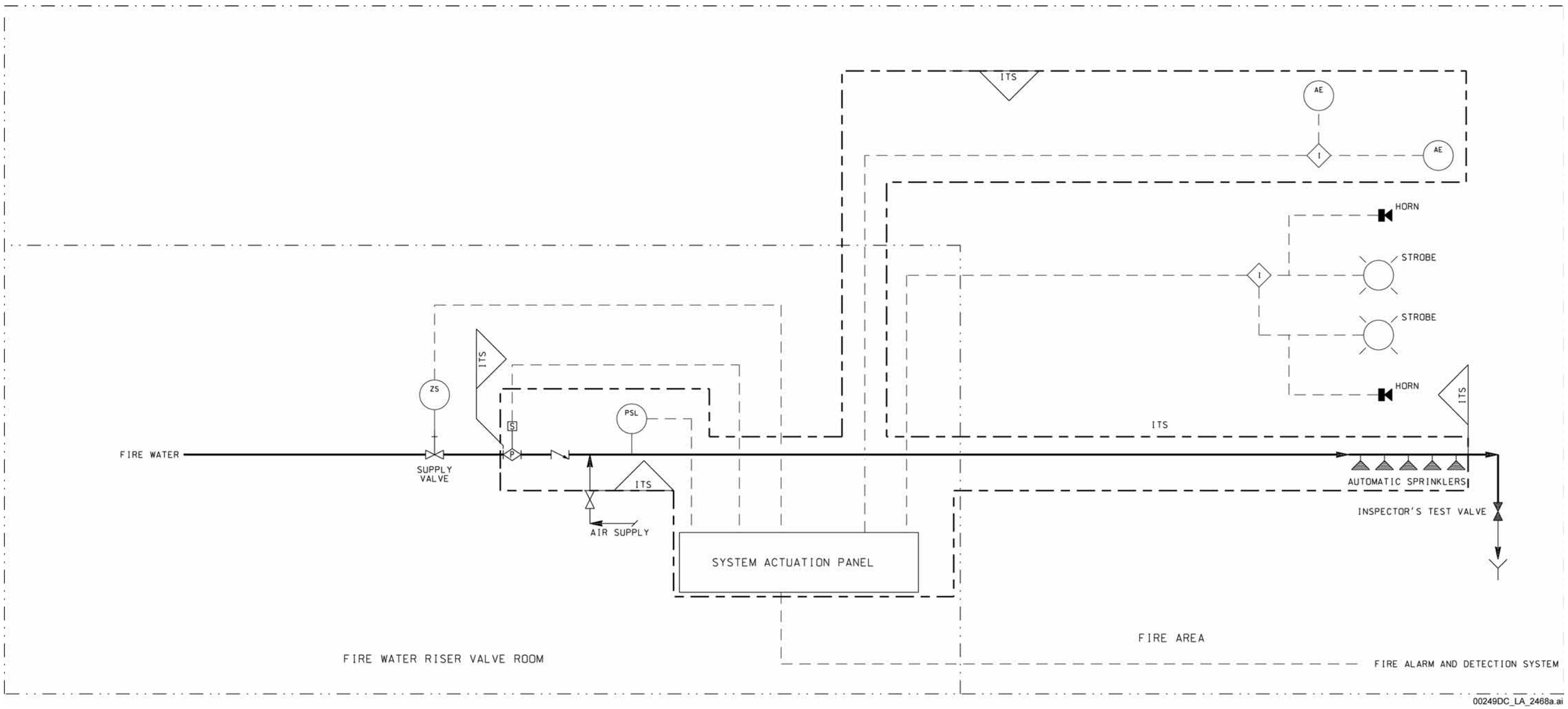

NOTE: This drawing identifies piping and instrumentation and instrumentation and control requirements for the fire suppression systems. Final design will be determined by the qualified fire protection subcontractor in accordance with the system specification. The double-interlock preaction valve, the associated solenoid valve and valve trim, detectors, sprinklers, and actuator panel are ITS. The rest of the system is non-ITS and non-ITWI. The type of detector used varies. *Receipt Facility Fire Hazard Analysis* (BSC 2007b) describes each fire area requirement.

Figure 1.4.3-21. Typical Double-Interlocked Preaction Sprinkler Arrangement

INTENTIONALLY LEFT BLANK

CONTENTS

Page

1.4.4 Plant Services 1.4.4-1
1.4.4.1 General Purpose and Instrument Air Subsystems 1.4.4-2
1.4.4.2 Service Gases Subsystems. 1.4.4-3
1.4.4.3 Fuel Oil Subsystem 1.4.4-4
1.4.4.4 Raw, Potable, and Deionized Water Subsystems 1.4.4-5
1.4.4.5 Hot Water Heating and Chilled Water Cooling Subsystems 1.4.4-7
1.4.4.6 General References 1.4.4-8

INTENTIONALLY LEFT BLANK

TABLES

Page

1.4.4-1. Compressed Air by Facility 1.4.4-11
1.4.4-2. Service Gas Subsystem 30-Day Consumption Rate 1.4.4-11

INTENTIONALLY LEFT BLANK

FIGURES

Page

1.4.4-1. Utilities Facility Layout 1.4.4-13
1.4.4-2. Canister Receipt and Closure Facility General Purpose Air System Piping and Instrumentation Diagram 1.4.4-15
1.4.4-3. Canister Receipt and Closure Facility Instrument Air System Piping and Instrumentation Diagram 1.4.4-17
1.4.4-4. Canister Receipt and Closure Facility Helium and Argon Gas Supply and Distribution System Piping and Instrumentation Diagram 1.4.4-19
1.4.4-5. Diesel Fuel Oil Storage Tank, Diesel Fuel Oil System Storage and Distribution System Piping and Instrumentation Diagram. 1.4.4-21
1.4.4-6. Infrastructure Raw Water System Supply and Distribution Piping and Instrumentation Diagram (Sheet 1 of 2) 1.4.4-23
1.4.4-6. Infrastructure Raw Water System Supply and Distribution Piping and Instrumentation Diagram (Sheet 2 of 2) 1.4.4-25
1.4.4-7. Infrastructure Potable Water System Supply Piping and Instrumentation Diagram 1.4.4-27
1.4.4-8. Infrastructure Potable Water Distribution Supply Piping and Instrumentation Diagram 1.4.4-29
1.4.4-9. Utilities Facility Deionized Water System Supply and Distribution Piping and Instrumentation Diagram 1.4.4-31
1.4.4-10. Utilities Facility Plant Hot Water System Primary Loop Pumps Piping and Instrumentation Diagram 1.4.4-33
1.4.4-11. Utilities Facility Plant Hot Water System Primary Loop Boiler A Piping and Instrumentation Diagram 1.4.4-35
1.4.4-12. Utilities Facility Plant Hot Water System Distribution Loop Piping and Instrumentation Diagram 1.4.4-37
1.4.4-13. Utilities Facility Chilled Water System Primary Loop Pumps Piping and Instrumentation Diagram 1.4.4-39
1.4.4-14. Utilities Facility Chilled Water System Primary Loop Chiller A Piping and Instrumentation Diagram 1.4.4-41
1.4.4-15. Utilities Facility Chilled Water System Distribution Loop Piping and Instrumentation Diagram 1.4.4-43
1.4.4-16. Cooling Tower Condenser Water System Pumps Piping and Instrumentation Diagram 1.4.4-45
1.4.4-17. Utilities Facility Condenser Water System Chiller A Piping and Instrumentation Diagram 1.4.4-47
1.4.4-18. Condenser Water System Cooling Towers Piping and Instrumentation Diagram 1.4.4-49

INTENTIONALLY LEFT BLANK

1.4.4 Plant Services

[NUREG-1804, Section 2.1.1.2.3: AC 1, AC 2, AC 6; HLWRS-ISG-02 Section 2.1.1.2.3: AC 2]

This section describes the plant services that serve the geologic repository operations area facilities and adjacent support facilities, including a system description, operational processes, and design codes and standards. General purpose and instrument air; argon and helium service gases; fuel oils; raw, potable, and deionized water; and hot water heating and chilled water cooling are only provided to surface facilities; there are no needs for these services in the subsurface. Raw water is provided at the portals for construction only.

The plant services system consists of the following subsystems (BSC 2008, Sections 21 and 24):

- General purpose and instrument air
- Service gases
- Fuel oil
- Raw, potable, and deionized water
- Hot water heating and chilled water cooling.

These subsystems are discussed in Sections 1.4.4.1 to 1.4.4.5. The plant services system is categorized as not important to safety (non-ITS).

The plant services system is designed, constructed, and installed to ensure that the system remains operational to perform its intended function. The plant services system components that are located or exposed to the outdoor elements are designed to operate in temperature and humidity conditions identified in Table 1.2.2-1 to ensure system readiness and continued operation. Local control is provided in the Utilities Facility for hot water heating and chilled water cooling. System status is transmitted over the digital control and management information system to the Central Control Center Facility.

The Utilities Facility (Area 25A on Figure 1.2.1-2), which is located adjacent to the geologic repository operations area, houses components associated with providing plant utility services to the surface facilities. These include equipment for the heating and cooling systems and the deionized water subsystem. Figure 1.4.4-1 provides the layout of the facility.

The geologic repository operations area site plan is provided in Figure 1.2.1-2; it shows the location of the Utilities Facility and other buildings serviced by the plant services system. Each facility with a need for general purpose and instrument air or argon and/or helium service gases has its own general purpose compressed air, instrument air, and argon and helium service gases subsystems sized for the facility-specific needs. The design of each respective subsystem is similar for the facilities. The general purpose and instrument air and service gases subsystems designs in the Canister Receipt and Closure Facility are presented here as typical for the subsystems in the other facilities. The locations of air receiver tanks and service gases tanks for each facility are shown on the general arrangement drawings in their respective sections.

1.4.4.1 General Purpose and Instrument Air Subsystems

[NUREG-1804, Section 2.1.1.2.3: AC 1, (2), (3), (4); AC 2(1),(2), (3); AC 6]

The compressed air subsystems include an air supply for general purpose air and instrument air. Compressed air is used in the following facilities: Initial Handling Facility; Canister Receipt and Closure Facilities 1, 2, and 3; Wet Handling Facility; Receipt Facility; Standby Diesel Generator Facility; Central Control Center Facility; Heavy Equipment Maintenance Facility (general purpose air only); Low-Level Waste Facility; Craft Shops; Utilities Facility; and Warehouse and Non-Nuclear Receipt Facility. These compressed air subsystems are categorized as non-ITS. Piping and instrumentation diagrams for general purpose air and instrument air subsystems are shown for the Canister Receipt and Closure Facility on Figures 1.4.4-2 and 1.4.4-3. Table 1.4.4-1 presents the compressed air subsystem capacities by processing facility.

The intake filters of the compressors are located in a well-ventilated area that is free of contaminants, such as harmful fumes, engine exhaust, and dangerous solvents (BSC 2008, Section 24.2.2.5.1).

1.4.4.1.1 System Description

Function—General purpose air is used for the operation of pneumatic tools, air pallets, and other components that do not require cleaner and dryer instrument air. Instrument air is used for the operation of instruments and controls (e.g., grapples in mechanical handling equipment) (BSC 2008, Section 24.2.1.5). Except for the ITS diesel generator starting air system presented separately in Section 1.2.8.2.2, compressed air is not required for any ITS structure, system, or component to accomplish its safety function.

Description—Air compressors at each facility provide compressed air to a supply header that charges a general purpose air receiver and one instrument air receiver for each facility. The air receiver vessels are designed in accordance with *2004 ASME Boiler and Pressure Vessel Code* (ASME 2004, Section VIII, Division I), complete with a pressure gauge, relief valve, and a drain. Air compressors are provided for each facility with sufficient number and capacity to allow a compressor to be out of service for maintenance without impacting waste handling activities in the facility. This system configuration provides operational flexibility and reliability to supply compressed air to the end users. The compressors and receivers are sized for the facility-specific loads. The compressors, receivers and filter/dryer packages are shown on the general arrangement drawings of the facilities presented in their respective 1.2 sections.

The capacity of the general purpose air and instrument air receivers is based on the required operation of equipment in the event of a loss of power to the compressors to permit the orderly cessation of handling operations (BSC 2008, Section 24.2.2.5.2).

Both general purpose air and instrument air pass through filter and dryer units prior to their respective air receivers. The instrument air subsystem is designed to meet the air quality standard of ANSI/ISA-S7.0.01-1996, *Quality Standard for Instrument Air* (BSC 2007, Section 4.9.5.9).

1.4.4.1.2 Operational Processes

The general purpose air and instrument air subsystems operate continually and automatically following startup. The compressors are placed in service and loaded by automatic load controllers that sense header and receiver pressure. An operator periodically verifies the subsystem is functioning properly by visual inspection, checking that parameter values are within the normal range, and checking that parameter trends are satisfactory. Compressed air from the general purpose air receiver is provided as a backup supply to the instrument air subsystem in case an off-normal condition exists at the instrument air subsystem.

1.4.4.1.3 Design Codes and Standards

The codes and standards applicable to the design of the general purpose and instrument air subsystems are listed below:

- ANSI/ISA-S7.0.01-1996, *Quality Standard for Instrument Air*
- *2004 ASME Boiler and Pressure Vessel Code* (ASME 2004, Section VIII, Division 1)
- ASME B31.3-2004, *Process Piping*
- ASME B16.5-2003, *Pipe Flanges and Flanged Fittings, NPS 1/2 through NPS 24*
- ASME B16.5a-1998, *Addenda to ASME B16.5-1996 Pipe Flanges and Flanged Fittings NPS 1/2 through NPS 24*.

1.4.4.2 Service Gases Subsystems

[NUREG-1804, Section 2.1.1.2.3: AC 1(2), (3), (4); AC 2(1), (2), (3); AC 6]

1.4.4.2.1 System Description

Function—Service gases, helium and argon, are provided to each facility where the gases are required from storage tanks, high-pressure cylinders, or mobile gas tube trailers located near the facility. The service gases subsystems are categorized as non-ITS. The processes using service gases are controlled as a special process by the quality assurance program. The service gases subsystems are helium, argon, and argon–helium blend. The expected 30-day consumption rates by facility are presented in Table 1.4.4-2.

System Description—Helium is provided and distributed to the cask preparation and gas sampling areas of the Canister Receipt and Closure Facility, the Initial Handling Facility, the Receipt Facility, and the Wet Handling Facility for purging system lines and equipment and as makeup for the system for cooling casks and for drying transportation, aging, and disposal (TAD) canisters in the Wet Handling Facility. Helium is supplied to serve as makeup gas during cask sampling and also provides inert gas for backfilling the casks after the gas sampling operation is completed. Helium is used to support the backfilling operation in the waste package and TAD canister inerting process. The blending of argon and helium for welding the inner and outer lids to the waste package is performed at mixer stations located outside the Canister Receipt and Closure

Facility and Initial Handling Facility. The weld closure cells receive a 3:1 argon:helium blend by volume ratio for welding operations (BSC 2007, Section 4.9.5.4.3). Argon is used as the cover gas for closure welding of TAD canisters in the Wet Handling Facility.

The service gases subsystems are labeled as required by CGA P-9-2001, *The Inert Gases: Argon, Nitrogen, and Helium* (BSC 2007, Section 4.9.5.6). The service gases subsystems storage vessels are located outside the facility they service. The Canister Receipt and Closure Facility helium and argon gas supply and distribution subsystem piping and instrumentation diagram is shown in Figure 1.4.4-4.

1.4.4.2.2 Operational Processes

The service gases subsystems provide helium, argon, and argon–helium blend upon demand to its interfacing systems. The service gases subsystems operate continually and automatically following startup. The gas storage tanks are placed in service and system pressure maintained by pressure control valves. An operator periodically verifies the subsystems are functioning properly by visual inspection, checking that parameter values are within the normal range, and checking that parameter trends are satisfactory.

1.4.4.2.3 Design Codes and Standards

The codes and standards applicable to the design of the service gases subsystems are listed below:

- ASME B31.3-2004, *Process Piping*
- ASME B16.5-2003, *Pipe Flanges and Flanged Fittings, NPS ½ through NPS 24*
- ASME B16.5a-1998, *Addenda to ASME B16.5-1996 Pipe Flanges and Flanged Fittings NPS 1/2 through NPS 24*.
- CGA P-9-2001, *The Inert Gases: Argon, Nitrogen, and Helium*.

1.4.4.3 Fuel Oil Subsystem

[NUREG-1804, Section 2.1.1.2.3: AC 1(2), (3), (4); AC 2(1), (2), (3); AC 6]

1.4.4.3.1 System Description

Function—The function of the diesel fuel oil storage subsystem is to provide diesel fuel to the hot water heating boilers and to distribute diesel fuel to the day tanks for the engine-driven fire pumps and to site locomotives. The fuel oil subsystem consists of a tank, pumps, instrumentation, and associated ancillary equipment. Diesel fuel is pumped from the main fuel tank to the hot water boilers; diesel fuel is moved by tanker truck to the day tanks for the engine-driven fire pumps and to the pad for site locomotive refueling. Diesel fuel for the Standby Diesel Generator Facility buried fuel storage tanks and the buried tanks for the motor pool refueling station is provided by tanker truck. The fuel oil subsystem is categorized as non-ITS. The ITS diesel fuel supply to the ITS diesel generators is a separate system described in Section 1.2.8.2.1.

The main fuel oil storage tank, fuel oil system pumps, and distribution system piping and instrumentation diagrams are shown in Figure 1.4.4-5.

Description—The fuel oil storage tanks are designed using the methods and practices of API Std 650, *Welded Steel Tanks for Oil Storage*. The fuel oil storage tanks are located and separated from site structures and facilities in accordance with NFPA 30, *Flammable and Combustible Liquids Code*.

The fuel oil storage tanks have a secondary containment in accordance with NFPA 30 (BSC 2007, Section 4.9.1.2.5) to protect against oil spillage and provide for the safe storage and handling of flammable and combustible liquids. The main fuel oil storage tank is sized to supply diesel fuel oil during cold-weather operations to support boiler operations. The standby diesel generators also contain day tanks (BSC 2007, Section 4.9.5.3.5).

1.4.4.3.2 Operational Processes

The diesel fuel oil subsystem provides diesel fuel oil upon demand to its interfacing systems. The diesel fuel oil system operates continually and automatically following startup. One pump is placed in automatic mode. It starts based on a low level signal in the hot water boiler day tank and stops on high level. The second pump is a backup and is normally in the stopped control mode. An operator periodically verifies the subsystem is functioning properly by visual inspection, checking that parameter values are within the normal range, and checking that parameter trends are satisfactory. The engine-driven fire pump fuel tanks are filled by tanker truck based on level indication that is shown on both the main fire protection panel and on the digital control and management information system plant services human-machine interface console. Similarly the standby diesel generators fuel tanks are filled by tanker truck based on low level indication on the digital control and management information system.

1.4.4.3.3 Design Codes and Standards

The codes and standards applicable to the design of the fuel oil subsystem are listed below:

- API Std 650, *Welded Steel Tanks for Oil Storage*
- ASTM D 975-06, *Standard Specification for Diesel Fuel Oils*
- NFPA 30, *Flammable and Combustible Liquids Code*
- NFPA 70, *National Electrical Code*
- NFPA 780, *Standard for the Installation of Lightning Protection Systems*.

1.4.4.4 Raw, Potable, and Deionized Water Subsystems

[NUREG-1804, Section 2.1.1.2.3: AC 1(2), (3), (4); AC 2(1), (2), (3); AC 6]

1.4.4.4.1 System Description

Function—The function of the water subsystems is to provide water of various quality to the North Portal, the North Construction Portal area, and the South Portal. Section 1.1.9.3.2.7 describes the raw water supply and treatment. Raw water is used as makeup to the fire water storage tanks. Potable water is provided to facilities for drinking and for occupational safety

fixtures use, such as for emergency showers and eyewashes. Potable water is also provided through the distribution piping as utility water in the nonradiological facilities for washdown and housekeeping. Potable water is provided to the closed-loop hot water and chilled water systems. Deionized water is provided for decontamination and for makeup water for the pool in the Wet Handling Facility. The water subsystems are categorized as non-ITS.

Description—Water tanks are designed using the methods and practices of ANSI/AWWA D100-05, *Welded Carbon Steel Tanks for Water Storage*. Pressurized tanks are designed in accordance with Section VIII, Division 1 of *2004 ASME Boiler and Pressure Vessel Code* (ASME 2004). Figures 1.4.4-6 to 1.4.4-9 show the raw water, potable water and deionized water supply and distribution piping and instrumentation diagrams. Deionized water quality is suitable for use in the pool in the Wet Handling Facility (BSC 2008, Section 24.2.2.3.3).

The location of the deionized water storage tank in the Utilities Facility is shown in Figure 1.4.4-1.

1.4.4.4.2 Operational Processes

The water subsystems provide water upon demand to interfacing systems. The water subsystems operate continually and automatically following startup. For transfer pumps, one pump is placed in automatic and it starts and stops based on level demand from a tank. The other transfer pump is "off." For distribution pumps, one pump is running all the time. Header pressure is maintained by modulating a recirculation valve back to the source tank. The other distribution pump is in automatic and will start should the running pump fail or header pressure drops too low. An operator periodically verifies the subsystem is functioning properly by visual inspection, checking that parameter values are within the normal range, and checking that parameter trends are satisfactory.

1.4.4.4.3 Design Codes and Standards

The codes and standards applicable to the design of the water subsystems are listed below:

- ANSI/AWWA D100-05, *Welded Carbon Steel Tanks for Water Storage*
- ASME B31.3-2004, *Process Piping*
- ASME B73.1-2001, *Specification for Horizontal End Suction Centrifugal Pumps for Chemical Process*
- *2004 ASME Boiler and Pressure Vessel Code*, Section VIII, Division 1 (ASME 2004)
- NFPA 780, *Standard for the Installation of Lightning Protection Systems*.

1.4.4.5 Hot Water Heating and Chilled Water Cooling Subsystems

[NUREG-1804, Section 2.1.1.2.3: AC 1(2), (3), (4); AC 2(1), (2), (3); AC 6]

1.4.4.5.1 System Description

Function—The function of the hot water heating and chilled water cooling subsystems is to provide a sufficient quantity of hot water and chilled water to the surface facilities heating, ventilation, and air-conditioning (HVAC) subsystems heating coils and cooling coils. The hot water heating and chilled water cooling subsystems, in conjunction with the surface facilities HVAC subsystems, are designed to maintain proper environmental conditions (BSC 2008, Section 21.1.1). The hot water heating and chilled water cooling subsystems are categorized as non-ITS.

Description—The primary mechanical components of the hot water heating and chilled water cooling subsystems that serve the various HVAC subsystems are located in the Utilities Facility, as shown in Figure 1.4.4-1.

The hot water heating subsystem pumps are shown in Figure 1.4.4-10. A typical hot water heating boiler with piping and controls is shown in Figure 1.4.4-11. The hot water heating distribution piping is shown in Figure 1.4.4-12. The chilled water cooling subsystem pumps are shown in Figure 1.4.4-13. A typical chilled water cooling chiller with piping and controls is shown in Figure 1.4.4-14. The chilled water cooling distribution piping is shown in Figure 1.4.4-15. The chilled water cooling subsystem rejects heat to cooling towers. The cooling tower condenser water pumps and instrumentation are shown in Figure 1.4.4-16. A typical chiller with piping to the cooling towers and controls is shown in Figure 1.4.4-17. The cooling towers are shown in Figure 1.4.4-18.

The major components of the chilled water cooling and hot water heating subsystems are centrally located in the Utilities Facility. The chillers and associated primary and secondary circulating pumps, air separator, compression tank, and chemical additive tank are located in the chiller room of the Utilities Facility. The oil-fired hot water boilers and associated hot water circulating pumps, air separator, expansion tank, and chemical additive tank are located in the boiler room of the Utilities Facility. The hot water heating subsystem is classified as a low-temperature water system. The design, materials, fabrication, installation, inspection, examination, and testing of the water distribution piping system uses the methods and practices of ASME B31.3-2004, *Process Piping* (BSC 2007, Section 4.9.6.1.3).

1.4.4.5.2 Operational Processes

The hot water heating and chilled water cooling systems provide hot/cool water upon demand to their interfacing systems. The hot water heating and chilled water cooling systems operate continually and automatically following startup. The pumps are placed in service and loaded by automatic load controllers that sense temperature. Header temperatures for the hot water heating and chilled water cooling subsystems are maintained by modulating a recirculation valve back to the primary loops. An operator periodically verifies the subsystem is functioning properly by visual inspection, checking parameter values are within the normal range, and checking that parameter trends are satisfactory.

1.4.4.5.3 Design Codes and Standards

The codes and standards applicable to the hot water heating and chilled water cooling subsystems are listed below:

- *2004 ASME Boiler and Pressure Vessel Code* (ASME 2004, Sections IV and VIII)
- ASME B31.3-2004, *Process Piping*.

1.4.4.6 General References

ANSI/AWWA D100-05. 2006. *Welded Carbon Steel Tanks for Water Storage*. Denver, Colorado: American Water Works Association. TIC: 258668.

ANSI/ISA-S7.0.01-1996. *Quality Standard for Instrument Air.* Research Triangle Park, North Carolina: Instrument Society of America. TIC: 254082.

API Std 650. 2003. *Welded Steel Tanks for Oil Storage*. 10th Edition. Washington, D.C.: American Petroleum Institute. TIC: 255499.

ASME (American Society of Mechanical Engineers) 2004. *2004 ASME Boiler and Pressure Vessel Code*. 2004 Edition. New York, New York: American Society of Mechanical Engineers. TIC: 256479.

ASME B16.5-2003. *Pipe Flanges and Flanged Fittings, NPS 1/2 through NPS 24*. New York, New York: American Society of Mechanical Engineers. TIC: 255466.

ASME B16.5a-1998. *Addenda to ASME B16.5-1996 Pipe Flanges and Flanged Fittings, NPS 1/2 through NPS 24*. New York, New York: American Society of Mechanical Engineers. TIC: 254184.

ASME B31.3-2004. 2005. *Process Piping*. New York, New York: American Society of Mechanical Engineers. TIC: 258076.

ASME B73.1-2001. 2002. *Specification for Horizontal End Suction Centrifugal Pumps for Chemical Process*. New York, New York: American Society of Mechanical Engineers. TIC: 254619.

ASTM D 975-06. 2006. *Standard Specification for Diesel Fuel Oils*. West Conshohocken, Pennsylvania: American Society for Testing and Materials. TIC: 258729.

BSC (Bechtel SAIC Company) 2007. *Project Design Criteria Document*. 000-3DR-MGR0-00100-000-007. Las Vegas, Nevada: Bechtel SAIC Company. ACC: ENG.20071016.0005.

BSC 2008. *Basis of Design for the TAD Canister-Based Repository Design Concept*. 000-3DR-MGR0-00300-000-002. Las Vegas, Nevada: Bechtel SAIC Company. ACC: ENG.20080229.0007.

CGA P-9-2001. *The Inert Gases: Argon, Nitrogen, and Helium*. 3rd Edition. Chantilly, Virginia: Compressed Gas Association. TIC: 255315.

NFPA 30. 2006. *Flammable and Combustible Liquids Code*. 2003 Edition. Quincy, Massachusetts: National Fire Protection Association. TIC: 258720.

NFPA 70. 2005. *National Electrical Code*. 2005 Edition. Quincy, Massachusetts: National Fire Protection Association. TIC: 258735.

NFPA 780. 2004. *Standard for the Installation of Lightning Protection Systems*. 2004 Edition. Quincy, Mass: National Fire Protection Association. TIC: 257246.

INTENTIONALLY LEFT BLANK

Table 1.4.4-1. Compressed Air by Facility

Facility	General Purpose Receiver Tank Capacity (ft^3)	Air Compressor(s) Nominal Number/ Capacity (Each)	Instrument Air Receiver Tank Capacity (ft^3)
Canister Receipt and Closure Facility	1,100	4/990 scfm	500
Initial Handling Facility	700	2/1,250 scfm	100
Wet Handling Facility	1,100	3/990 scfm	300
Receipt Facility	900	3/990 scfm	300

Table 1.4.4-2. Service Gas Subsystem 30-Day Consumption Rate

Facility	Gas	Nominal 30-day Consumption Rate (acf)
Receipt Facility	Helium	900
	Argon	NA
Canister Receipt and Closure Facility	Helium	19,600
	Argon	14,400
Wet Handling Facility	Helium	10,900
	Argon	3,900
Initial Handling Facility	Helium	5,300
	Argon	3,900

NOTE: acf = actual cubic feet at site elevation; NA = not applicable.

INTENTIONALLY LEFT BLANK

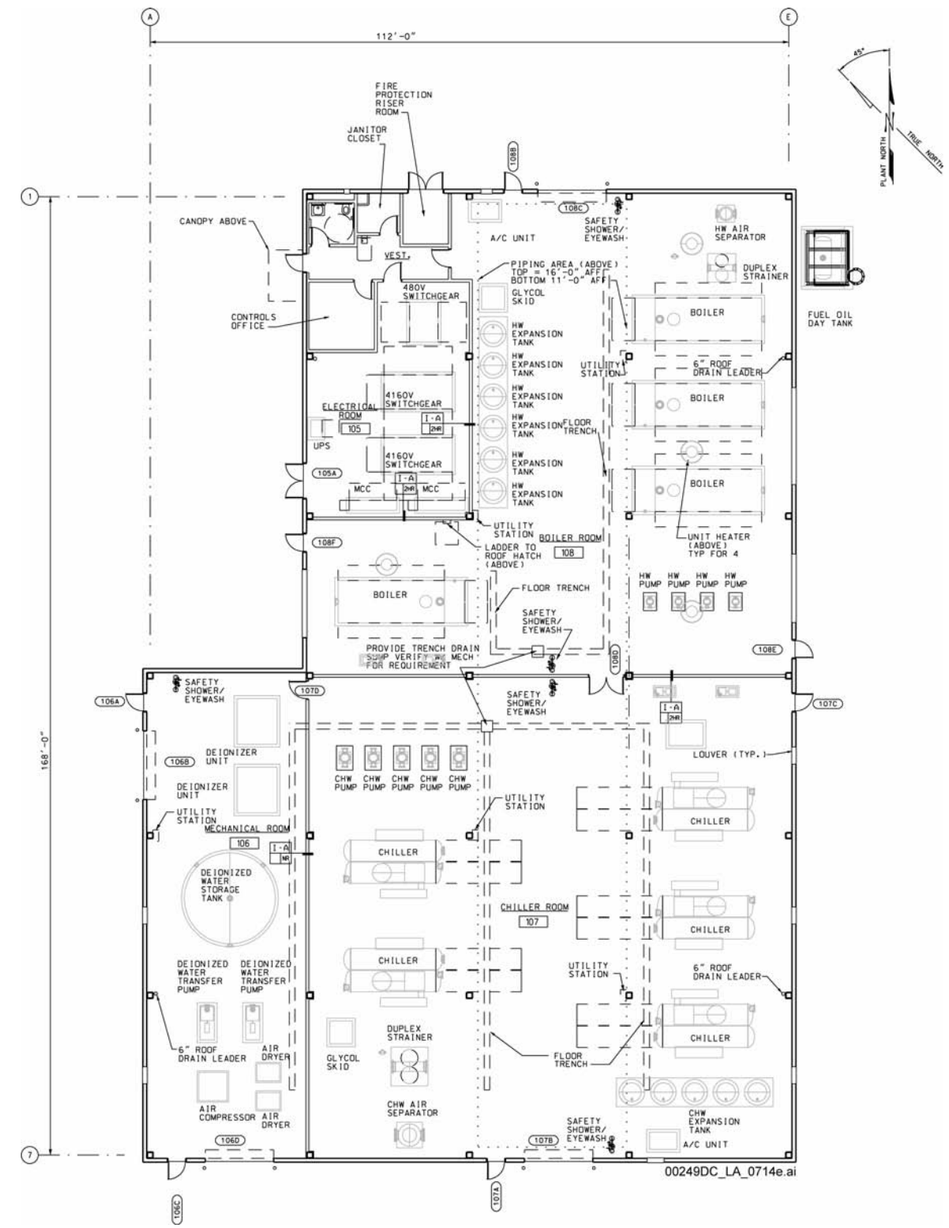

Figure 1.4.4-1. Utilities Facility Layout

INTENTIONALLY LEFT BLANK

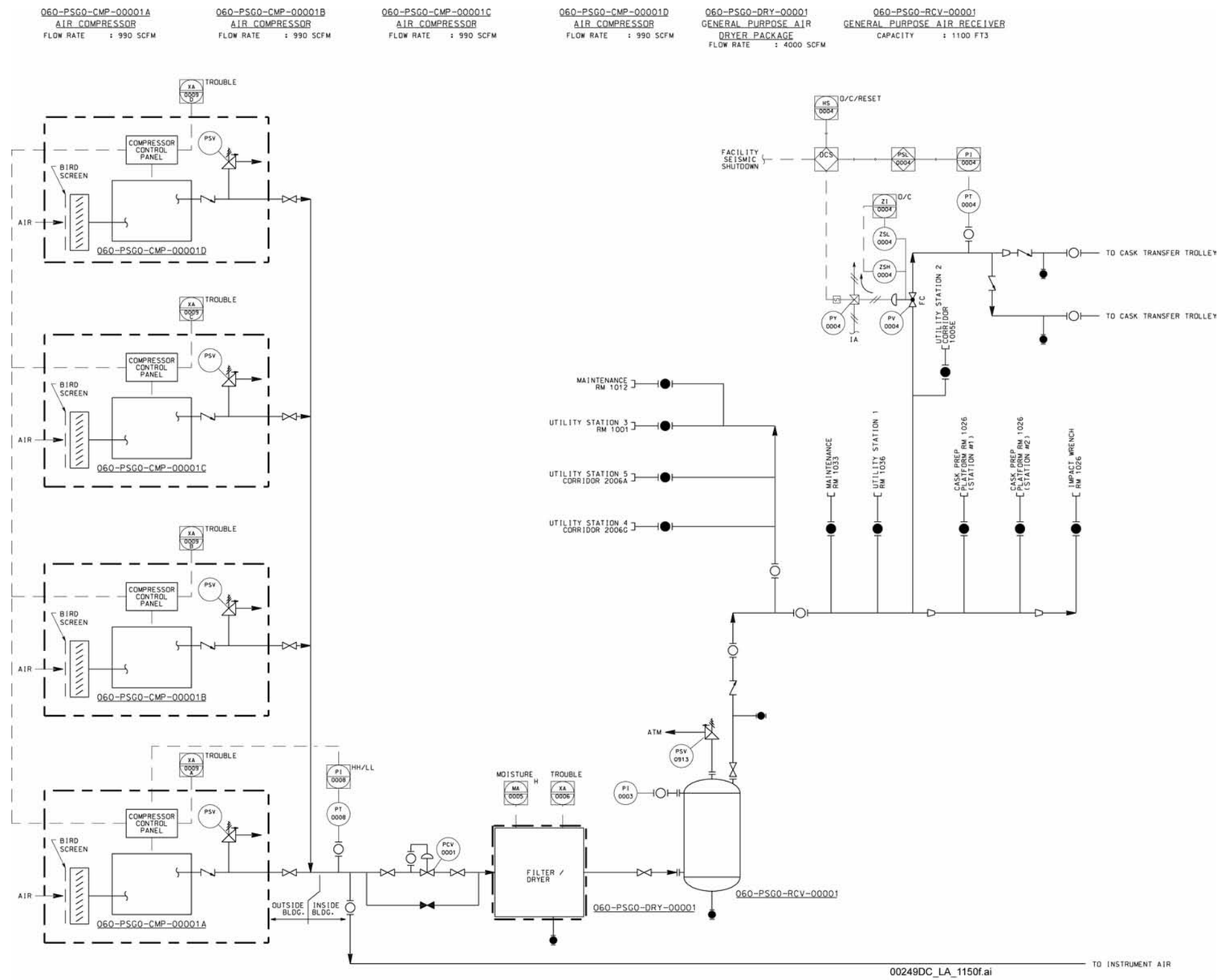

NOTE: PCV = pressure control valve; PI = pressure indicator;
PLC = programmable logic controller; PSV = pressure safety valve.

Figure 1.4.4-2. Canister Receipt and Closure Facility General Purpose Air System Piping and Instrumentation Diagram

INTENTIONALLY LEFT BLANK

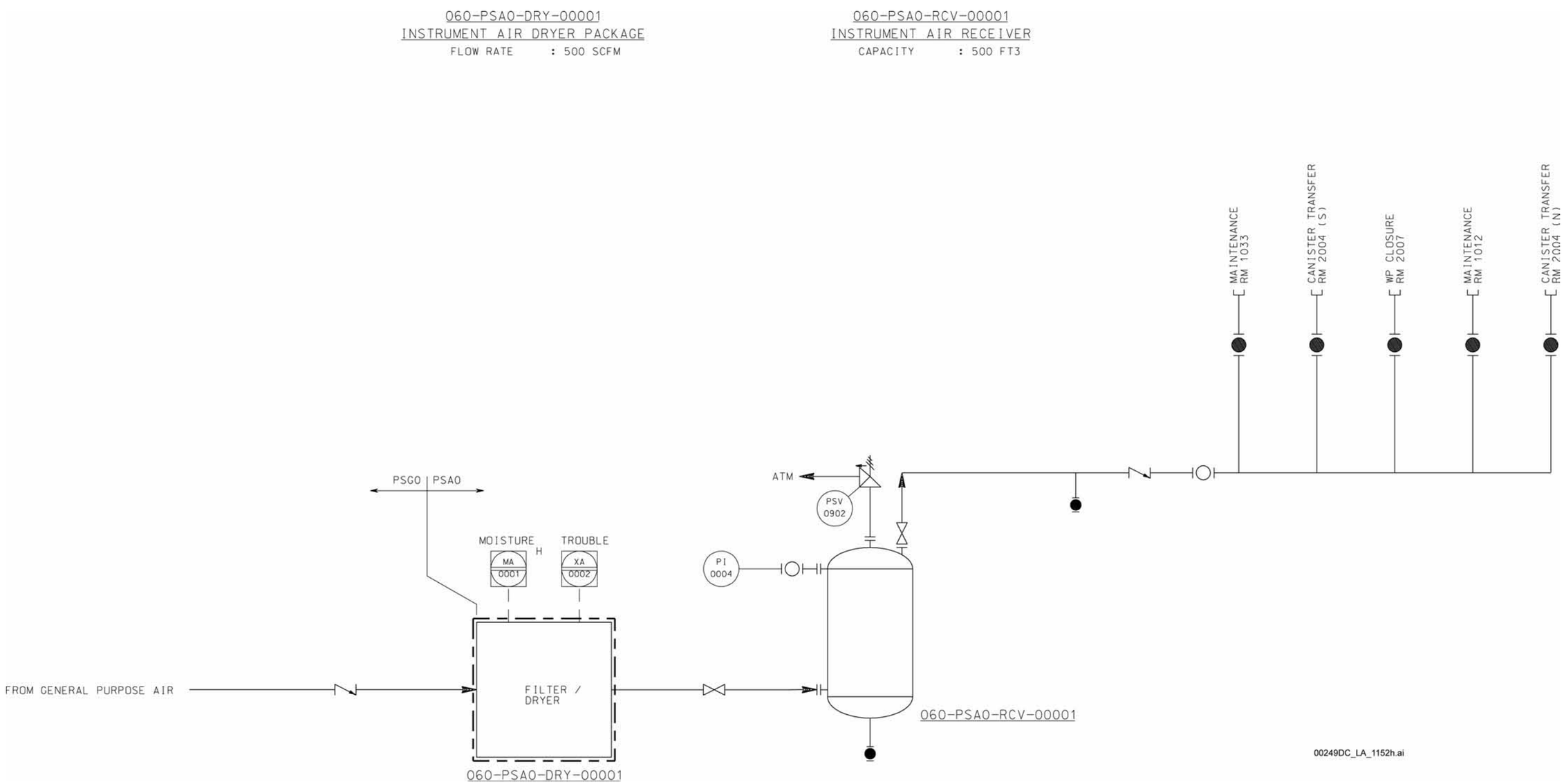

Figure 1.4.4-3. Canister Receipt and Closure Facility Instrument Air System Piping and Instrumentation Diagram

INTENTIONALLY LEFT BLANK

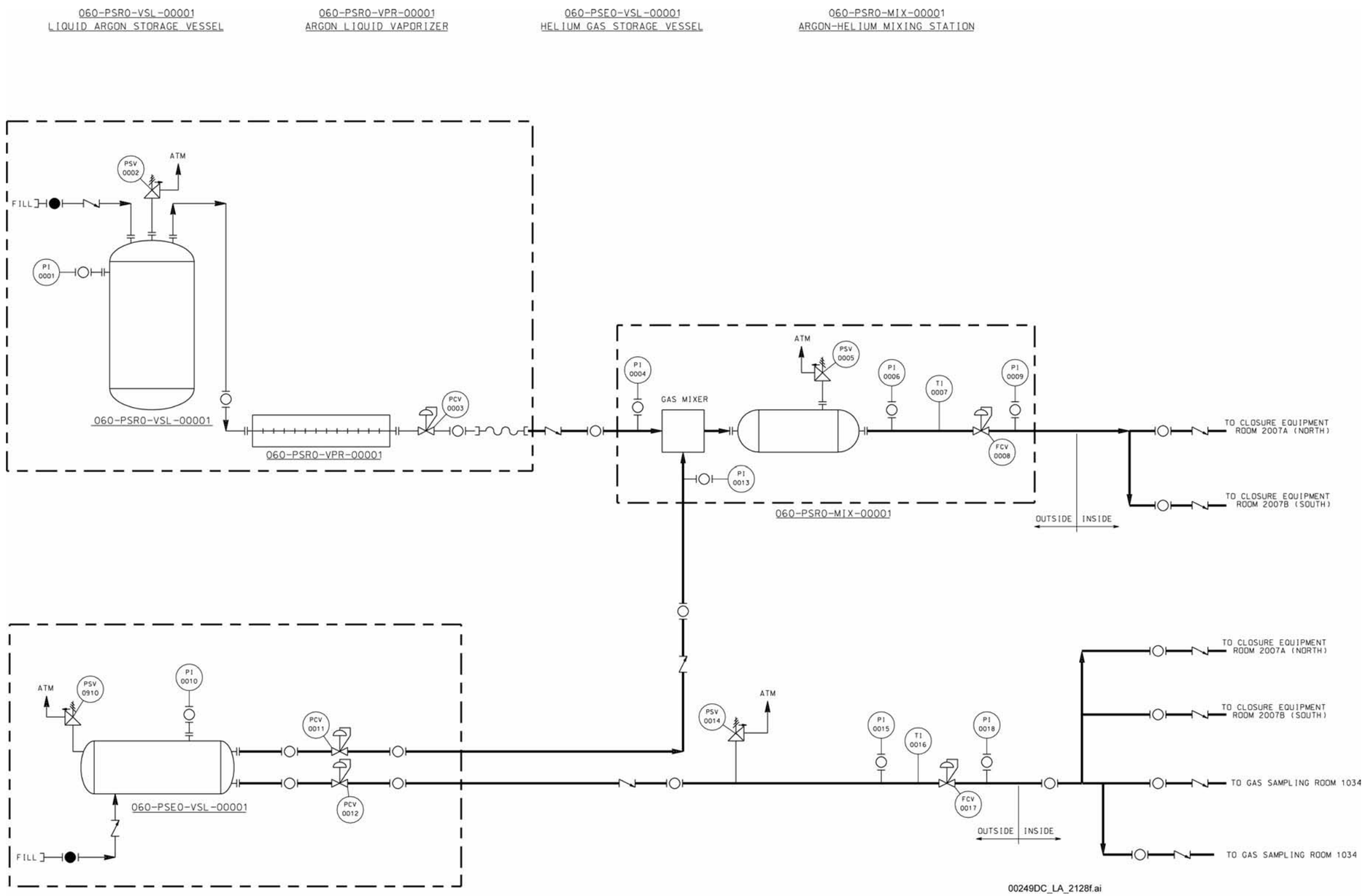

Figure 1.4.4-4. Canister Receipt and Closure Facility Helium and Argon Gas Supply and Distribution System Piping and Instrumentation Diagram

NOTE: AE = analysis sensor; FT = flow transmitter; PI = pressure indicator.

INTENTIONALLY LEFT BLANK

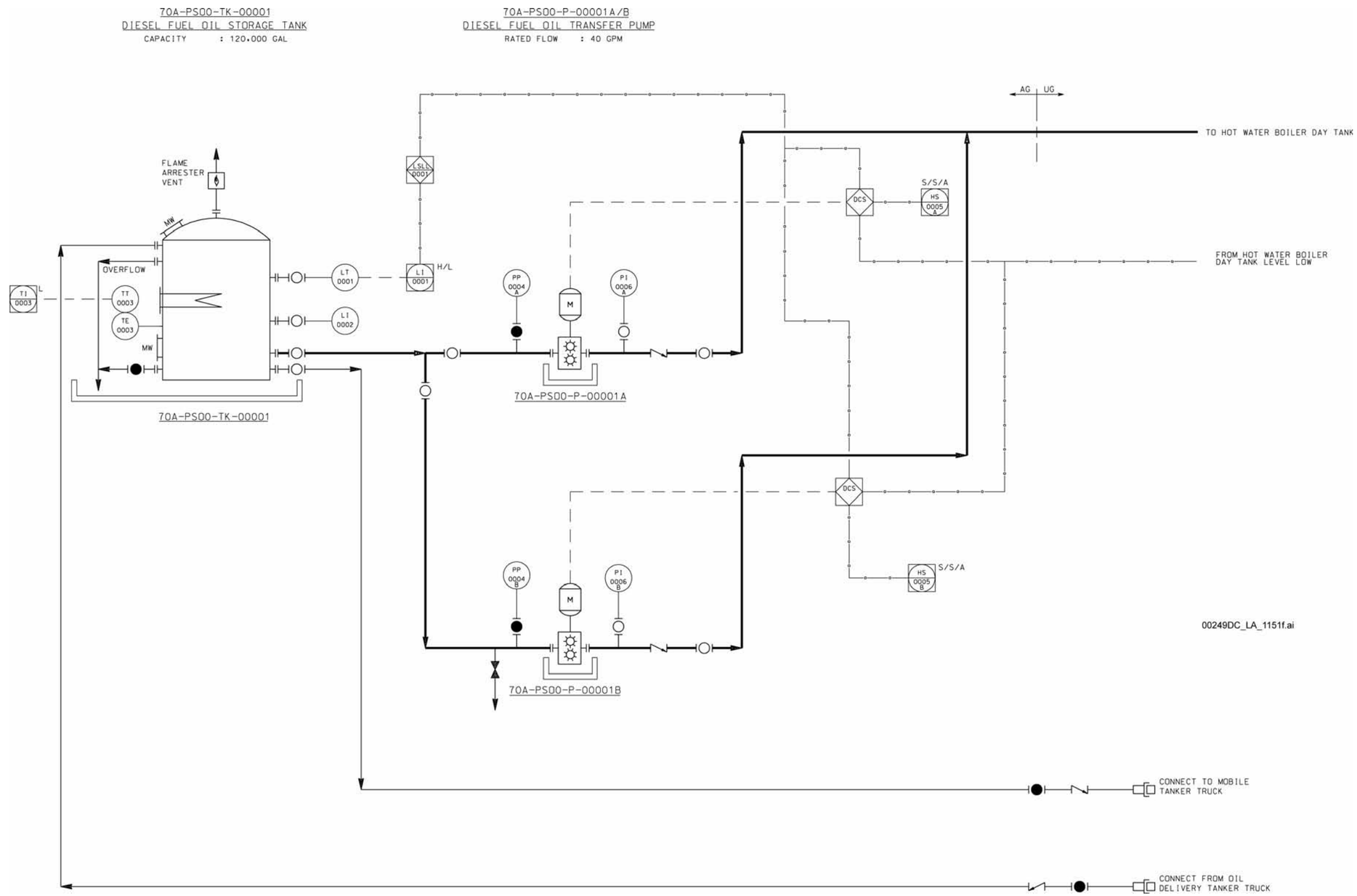

Figure 1.4.4-5. Diesel Fuel Oil Storage Tank, Diesel Fuel Oil System Storage and Distribution System Piping and Instrumentation Diagram

NOTE: FT = flow transmitter; PI = pressure indicator.

INTENTIONALLY LEFT BLANK

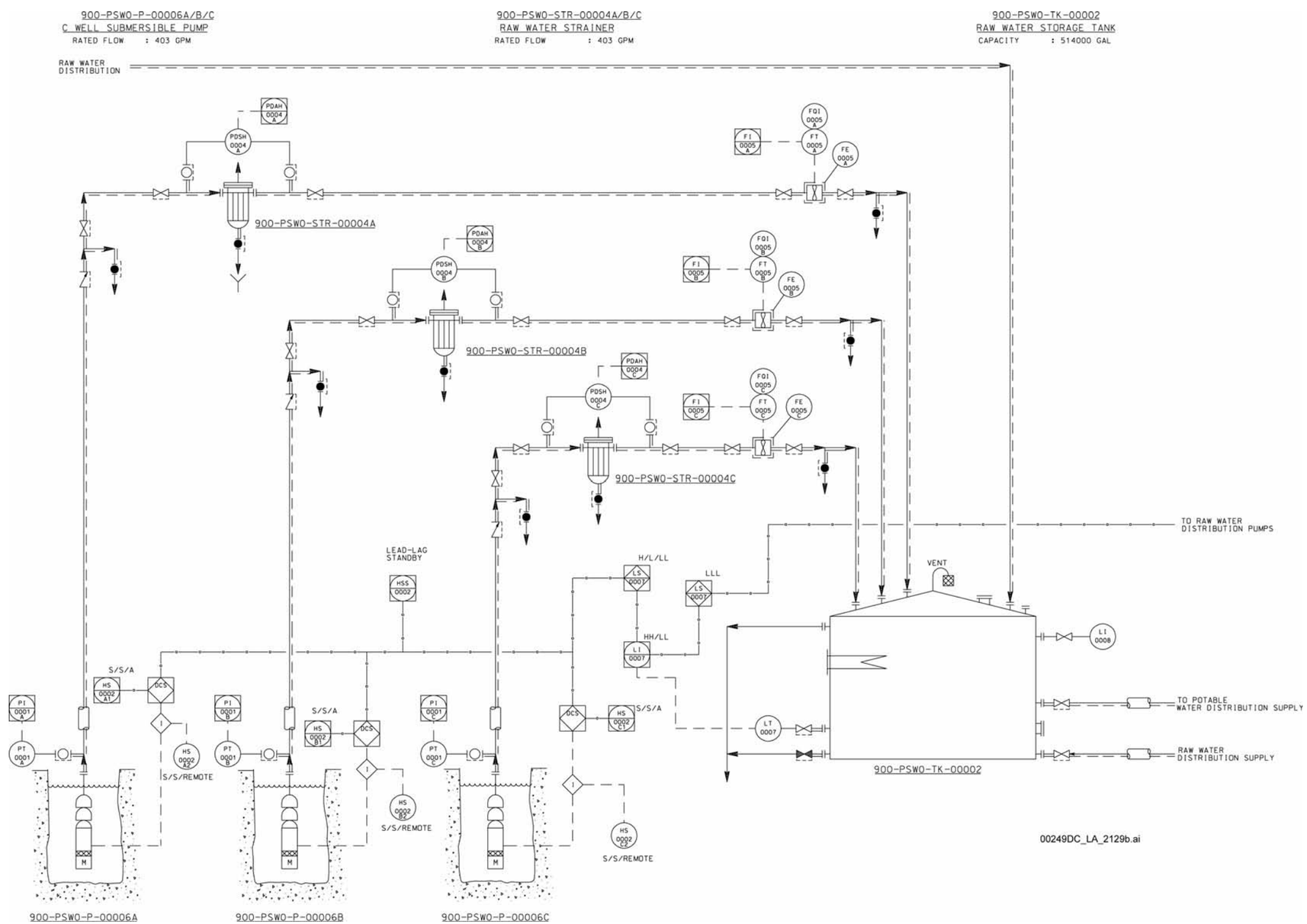

Figure 1.4.4-6. Infrastructure Raw Water System Supply and Distribution Piping and Instrumentation Diagram (Sheet 1 of 2)

INTENTIONALLY LEFT BLANK

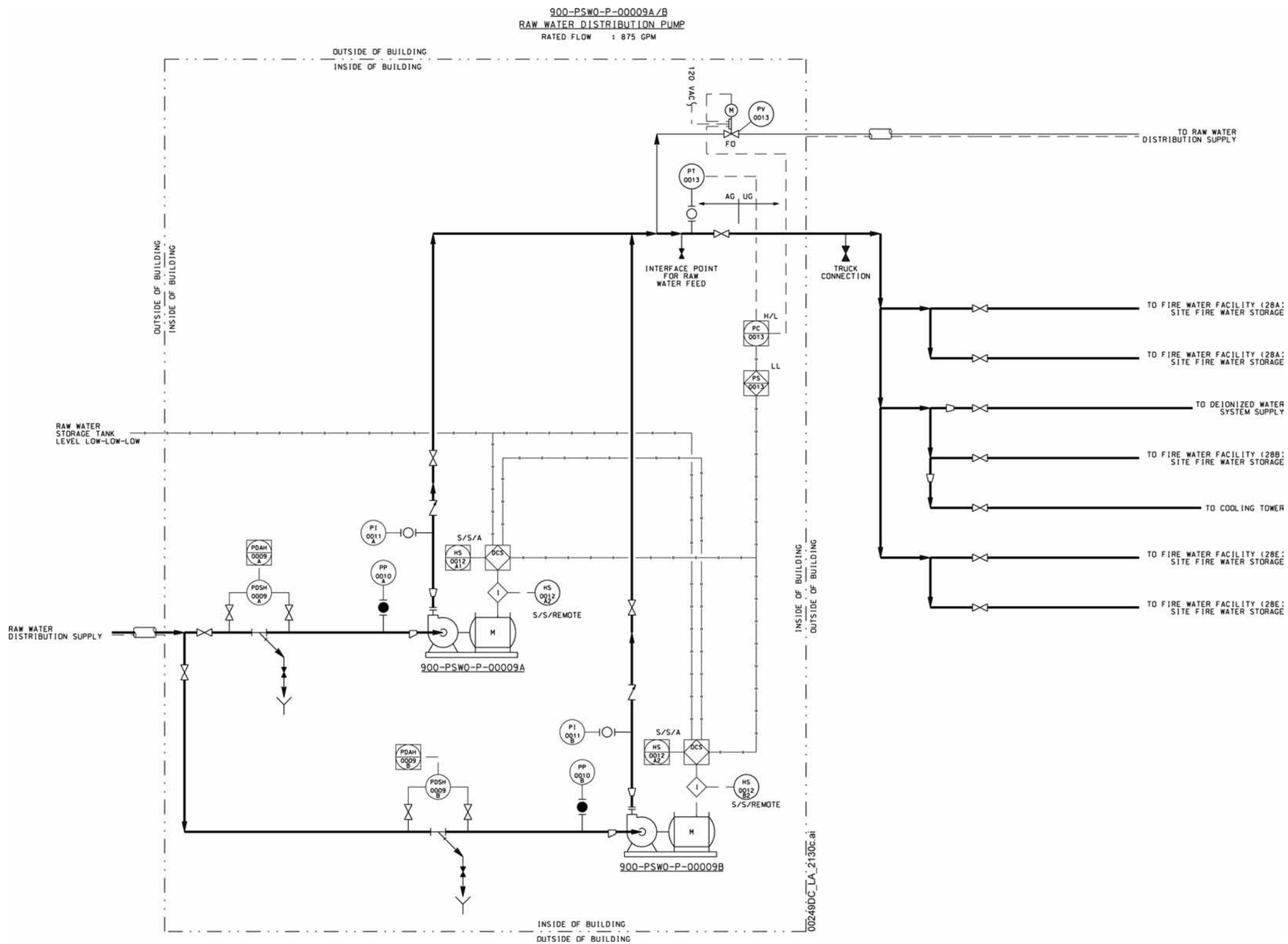

Figure 1.4.4-6. Infrastructure Raw Water System Supply and Distribution Piping and Instrumentation Diagram (Sheet 2 of 2)

INTENTIONALLY LEFT BLANK

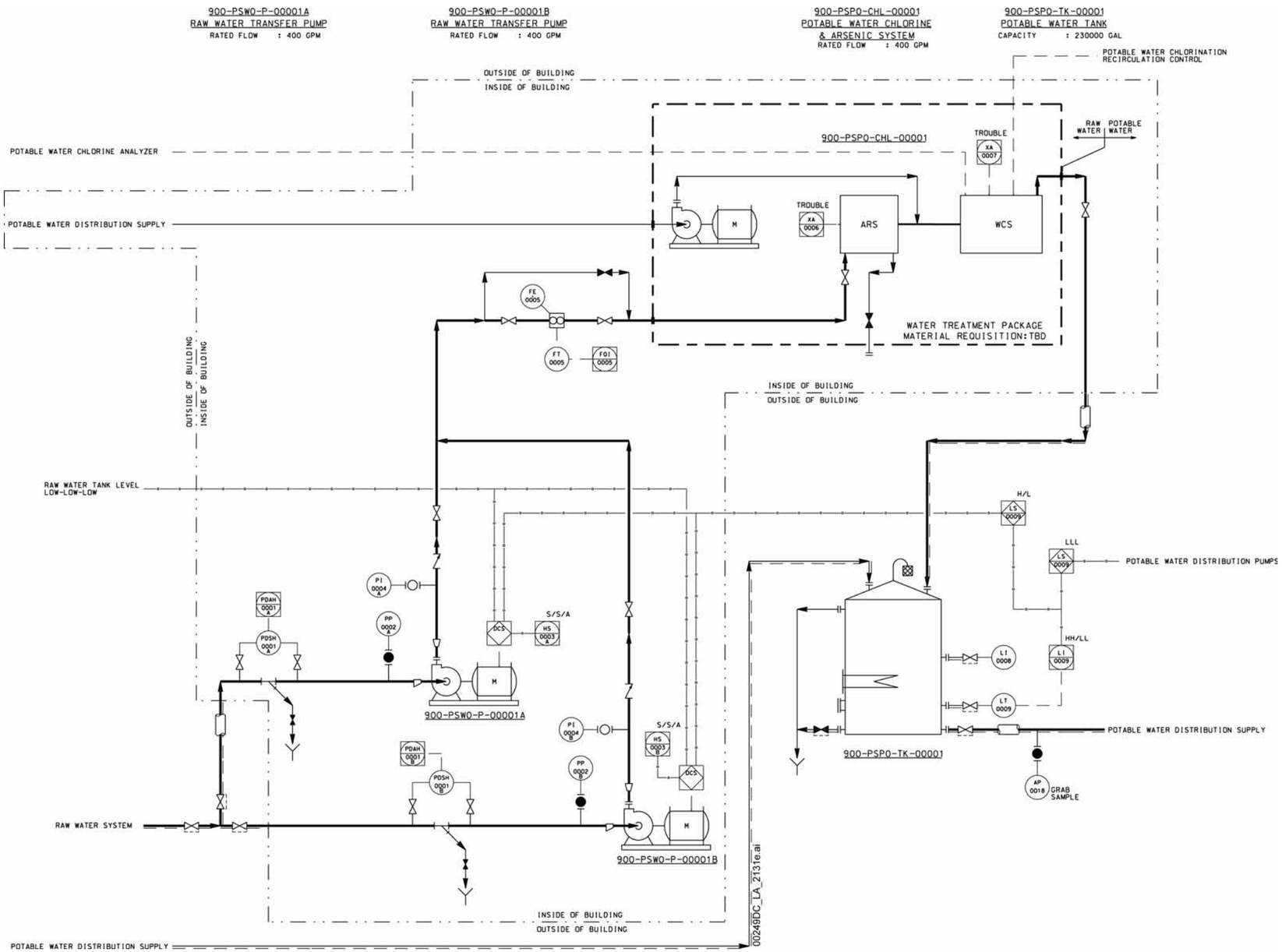

Figure 1.4.4-7. Infrastructure Potable Water System Supply Piping and Instrumentation Diagram

NOTE: ARS = arsenic removal system; WCS = water chlorination system.

INTENTIONALLY LEFT BLANK

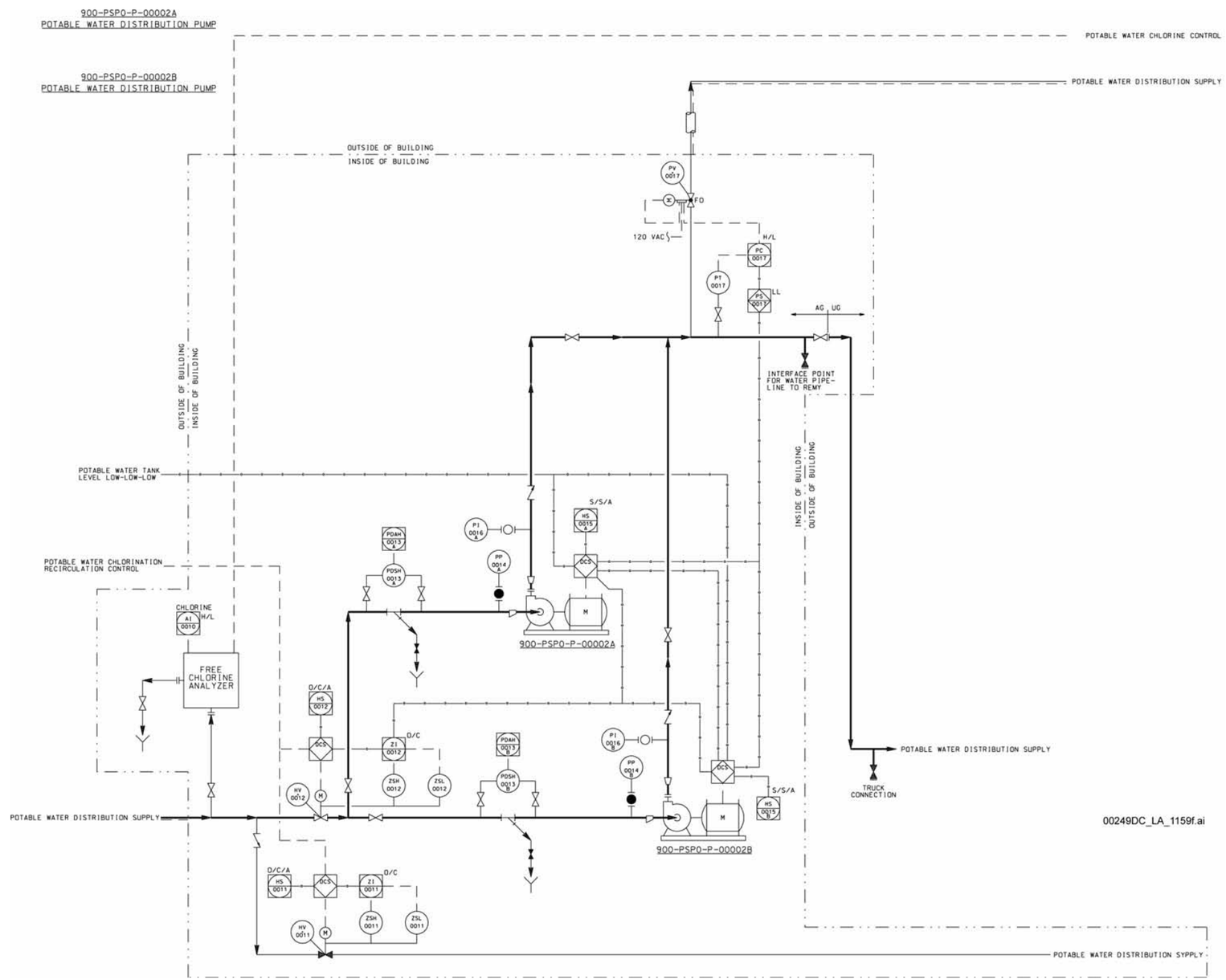

Figure 1.4.4-8. Infrastructure Potable Water Distribution Supply Piping and Instrumentation Diagram

INTENTIONALLY LEFT BLANK

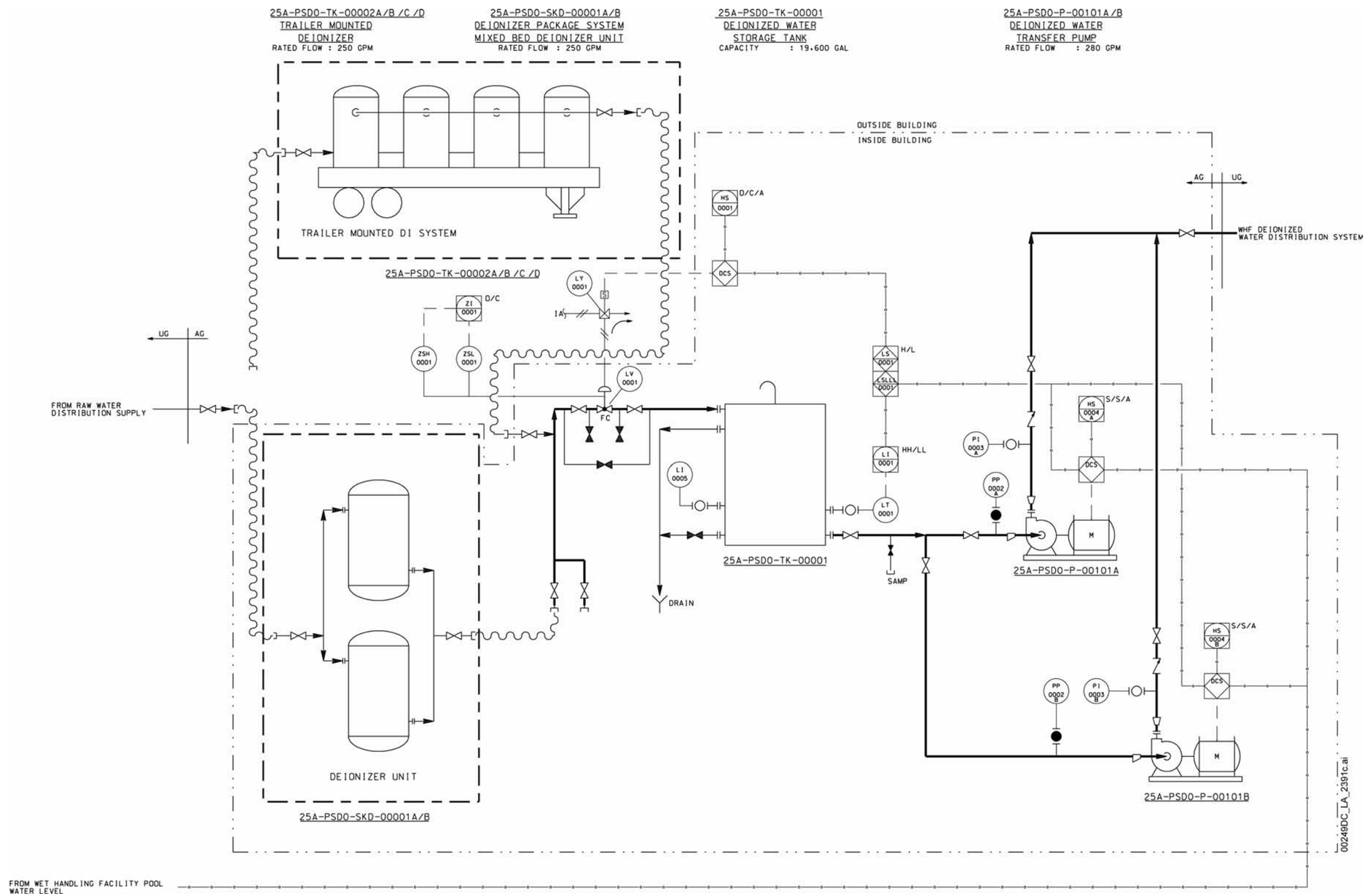

Figure 1.4.4-9. Utilities Facility Deionized Water System Supply and Distribution Piping and Instrumentation Diagram

NOTE: DI = deionizer.

INTENTIONALLY LEFT BLANK

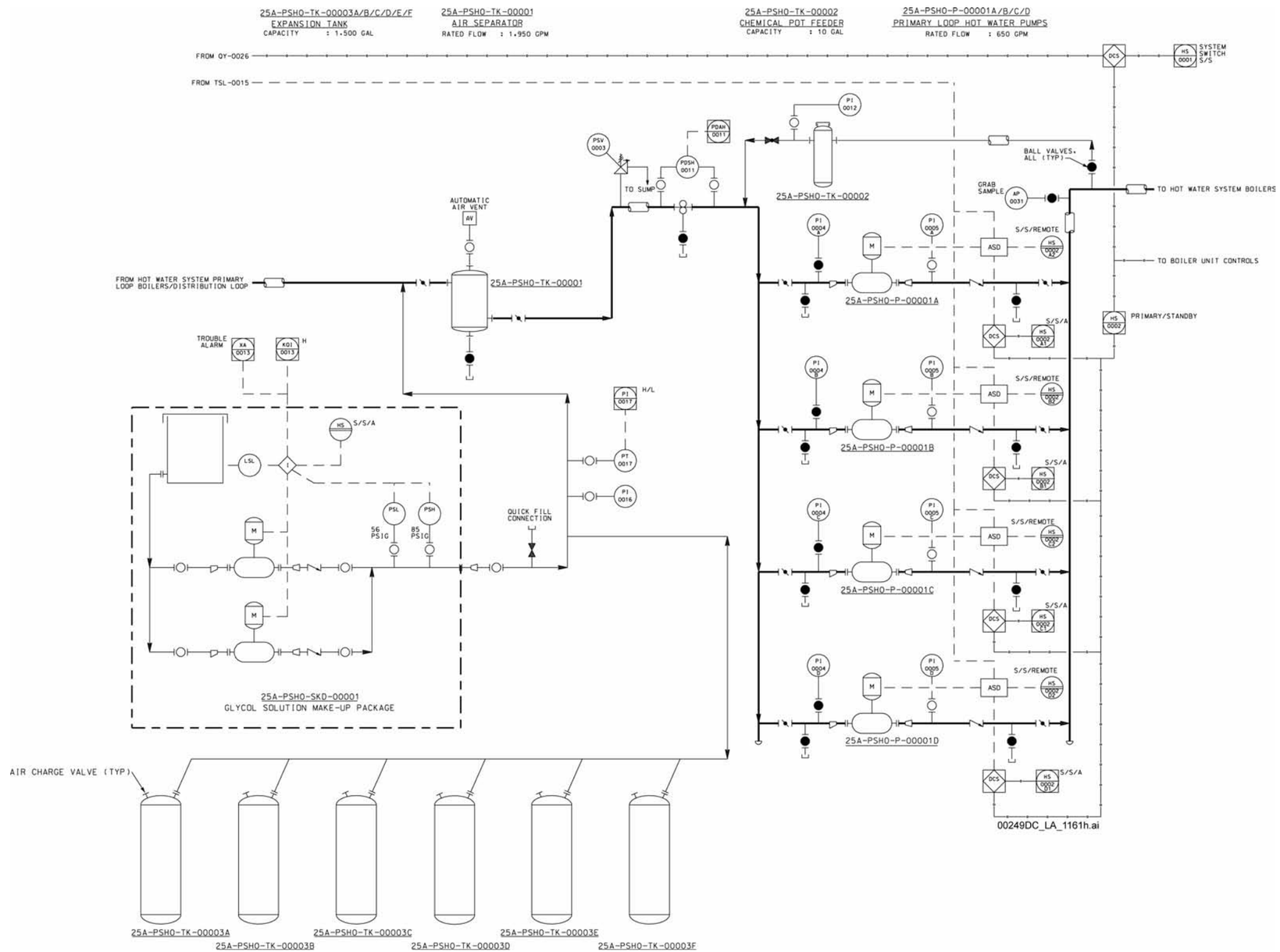

Figure 1.4.4-10. Utilities Facility Plant Hot Water System Primary Loop Pumps Piping and Instrumentation Diagram

INTENTIONALLY LEFT BLANK

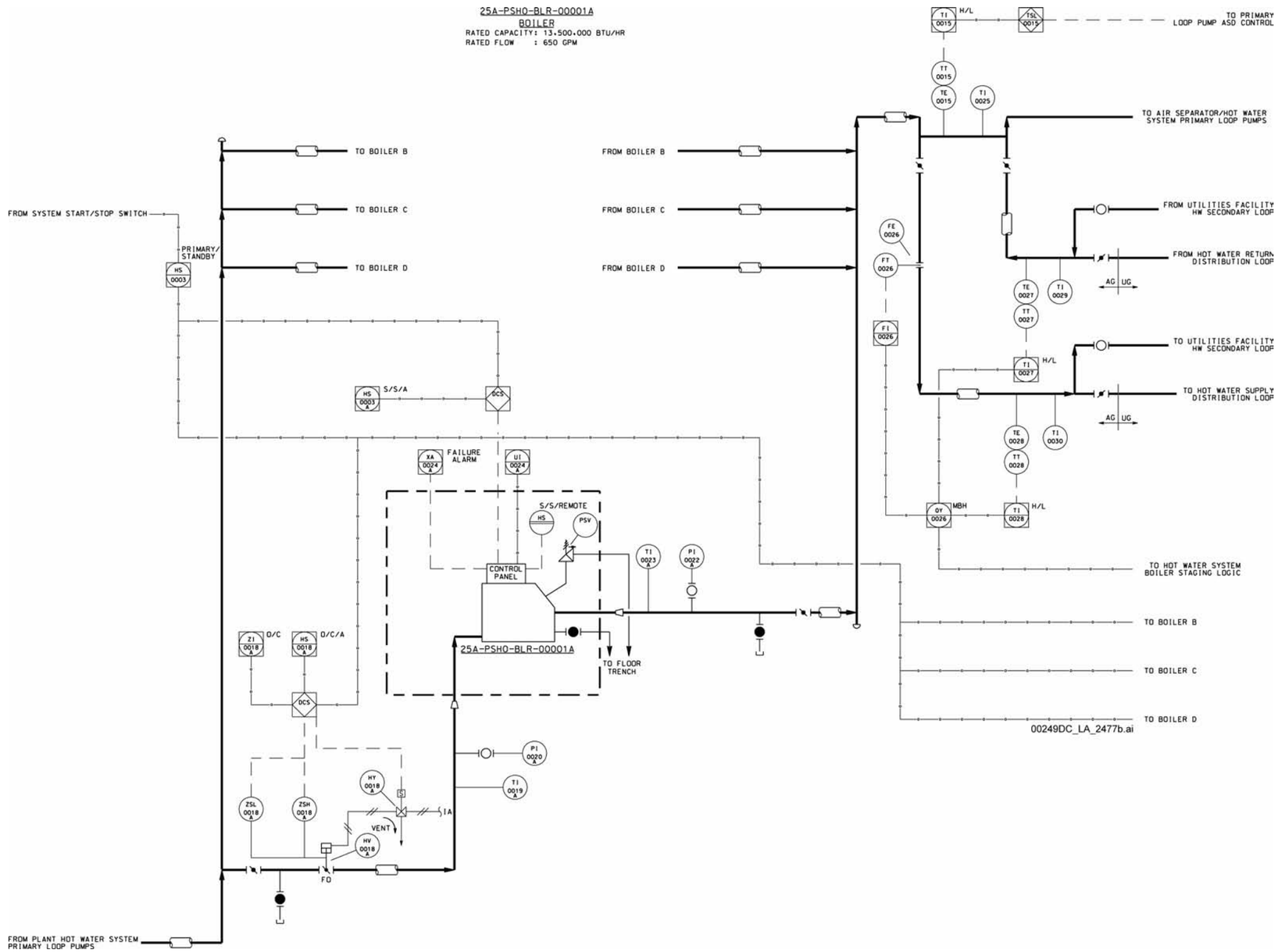

NOTE: FE = flow element; FI = flow indicator; FT = flow transmitter; HWR = hot water return; HWS = hot water supply; TE = temperature element; TT = temperature transmitter; TY = temperature transducer.

Figure 1.4.4-11. Utilities Facility Plant Hot Water System Primary Loop Boiler A Piping and Instrumentation Diagram

INTENTIONALLY LEFT BLANK

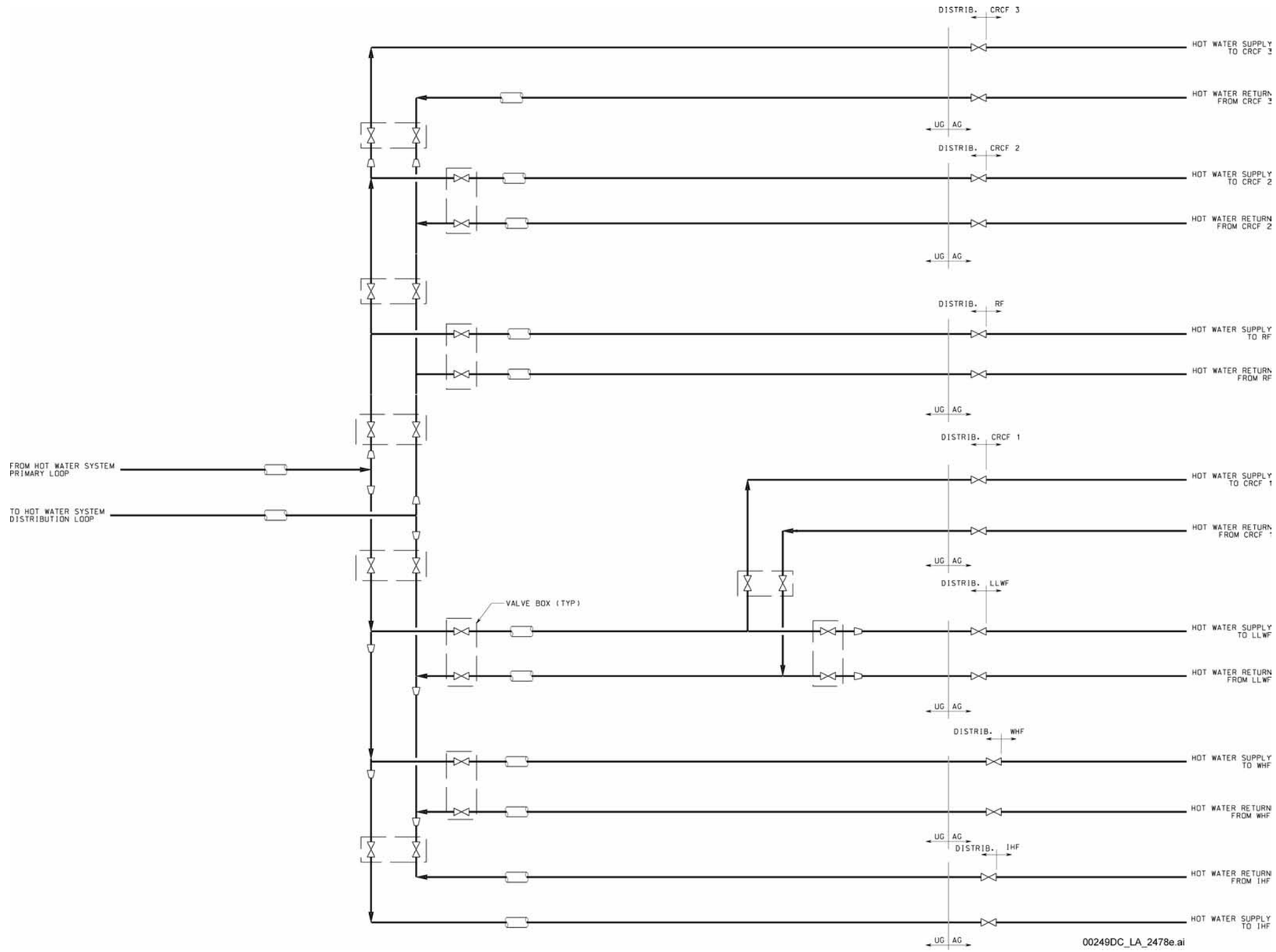

NOTE: CRCF = Canister Receipt and Closure Facility; IHF = Initial Handling Facility; LLWF = Low-Level Waste Facility; RF = Receipt Facility; WHF = Wet Handling Facility.

Figure 1.4.4-12. Utilities Facility Plant Hot Water System Distribution Loop Piping and Instrumentation Diagram

INTENTIONALLY LEFT BLANK

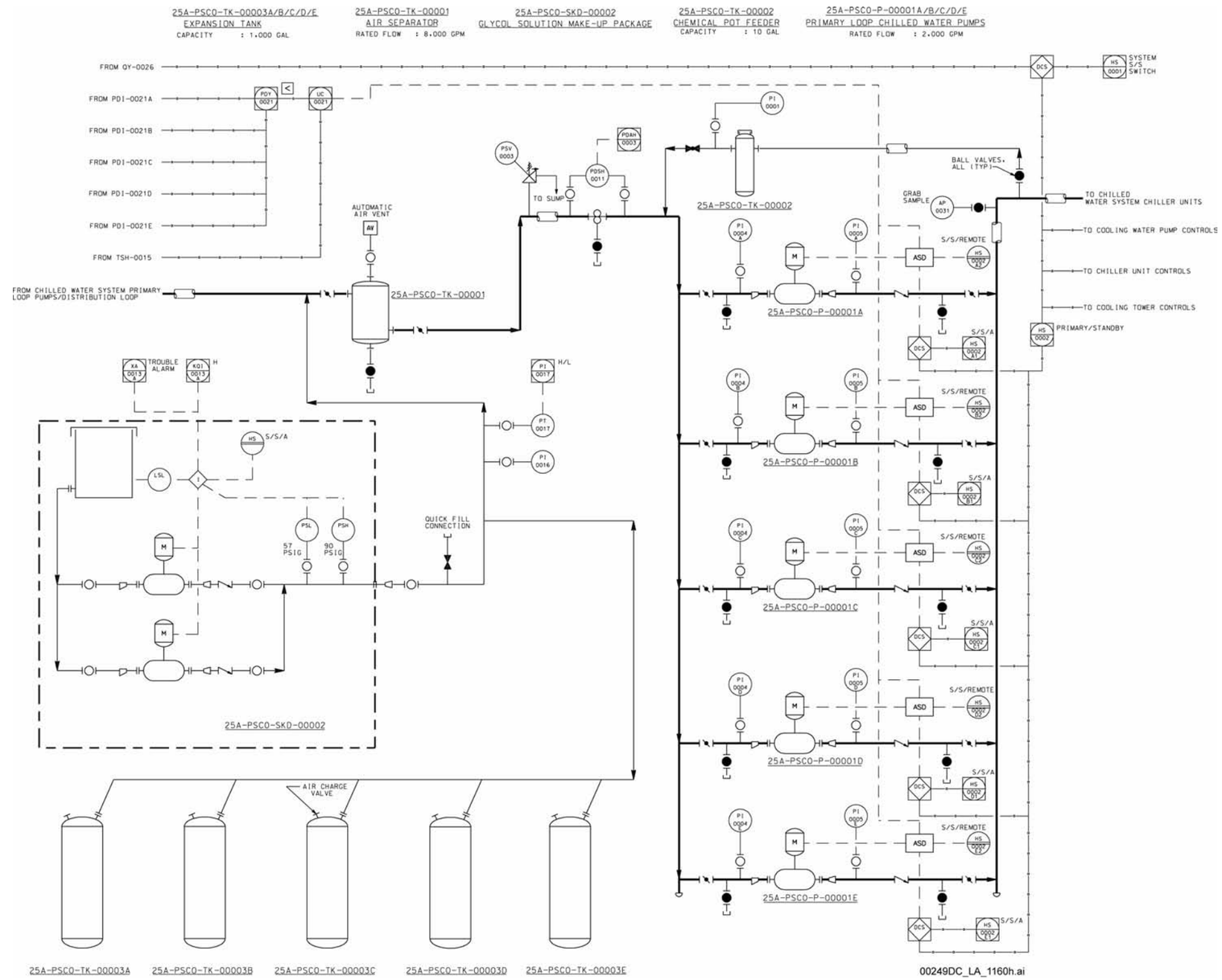

NOTE: ASD = adjustable speed drive; CHWR = chilled water return; CHWS = chilled water supply; FS = flow switch; TWR = cooling tower water return; TWS = cooling tower water supply.

Figure 1.4.4-13. Utilities Facility Chilled Water System Primary Loop Pumps Piping and Instrumentation Diagram

INTENTIONALLY LEFT BLANK

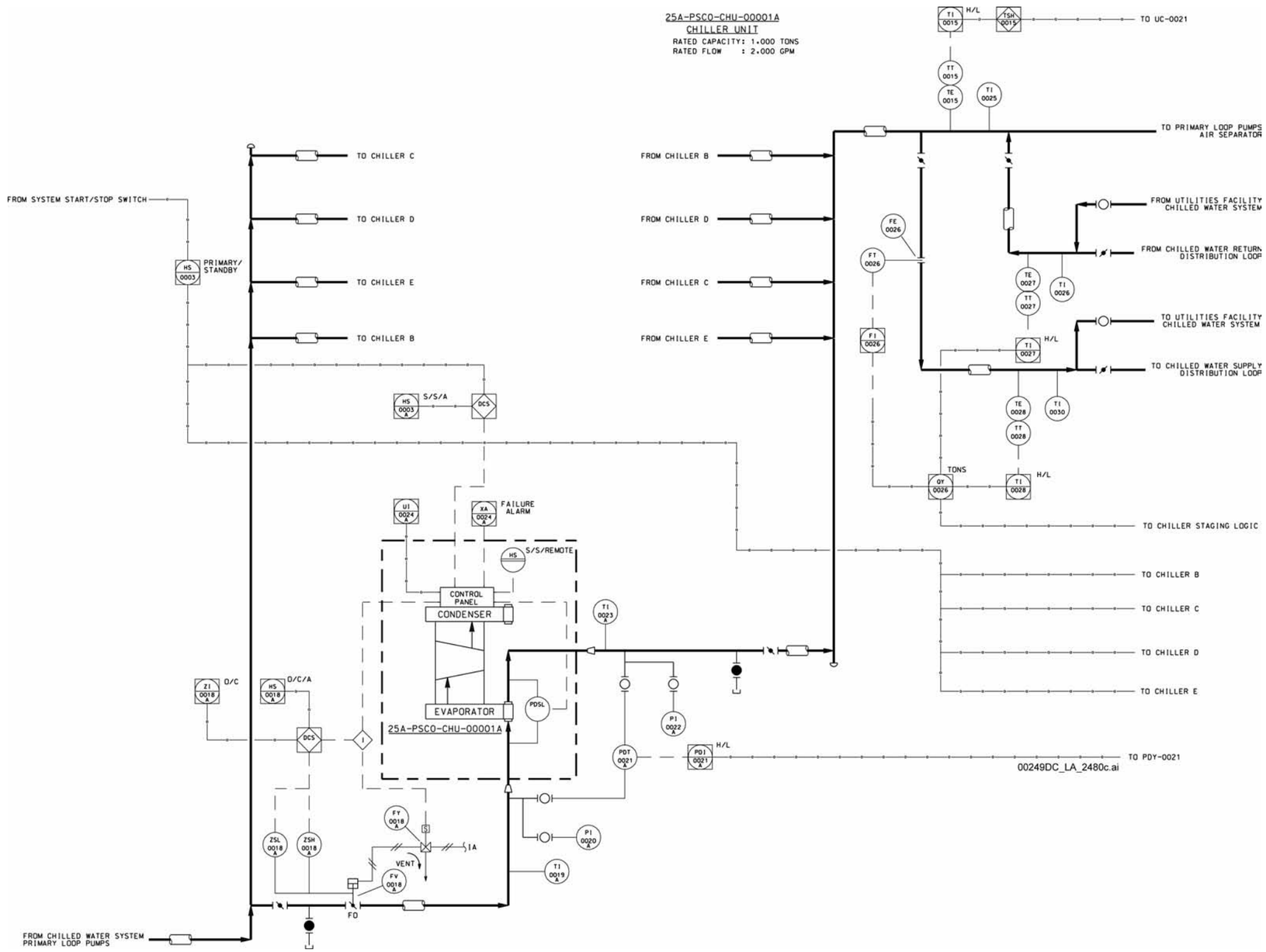

Figure 1.4.4-14. Utilities Facility Chilled Water System Primary Loop Chiller A Piping and Instrumentation Diagram

INTENTIONALLY LEFT BLANK

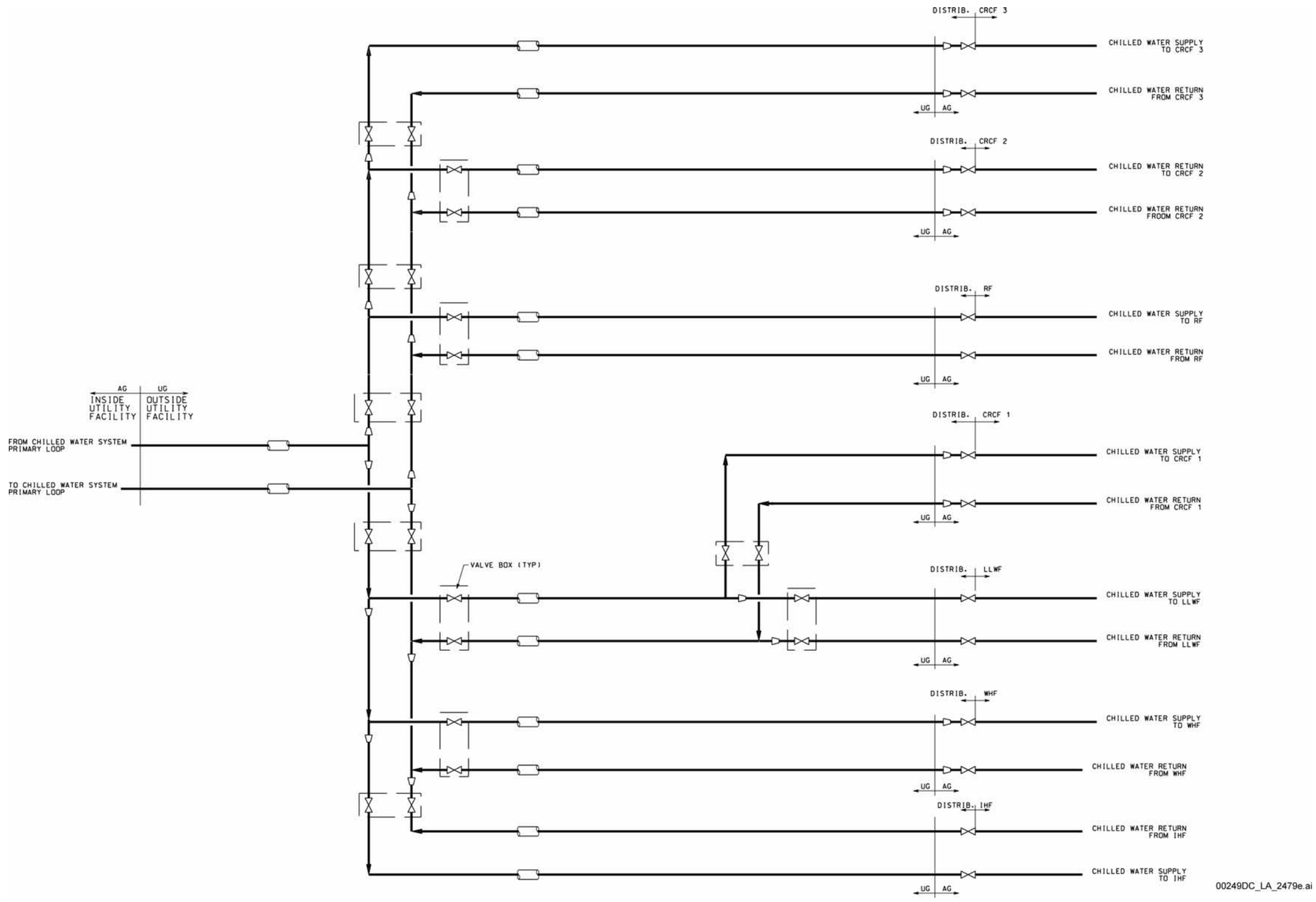

NOTE: CRCF = Canister Receipt and Closure Facility; IHF = Initial Handling Facility; LLWF = Low-Level Waste Facility; RF = Receipt Facility; WHF = Wet Handling Facility.

Figure 1.4.4-15. Utilities Facility Chilled Water System Distribution Loop Piping and Instrumentation Diagram

INTENTIONALLY LEFT BLANK

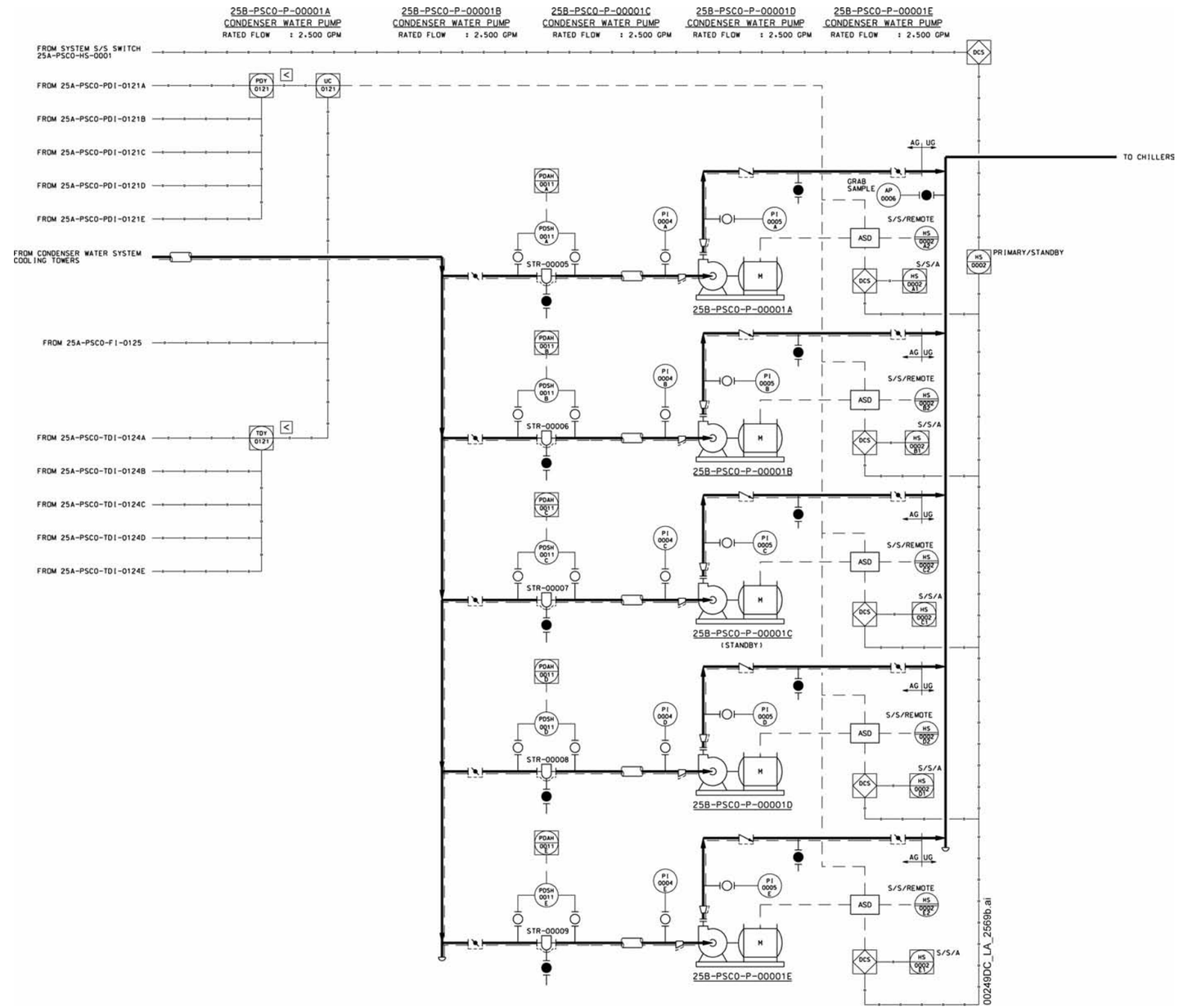

Figure 1.4.4-16. Cooling Tower Condenser Water System Pumps Piping and Instrumentation Diagram

NOTE: PI = pressure indicator; TI = temperature indicator.

INTENTIONALLY LEFT BLANK

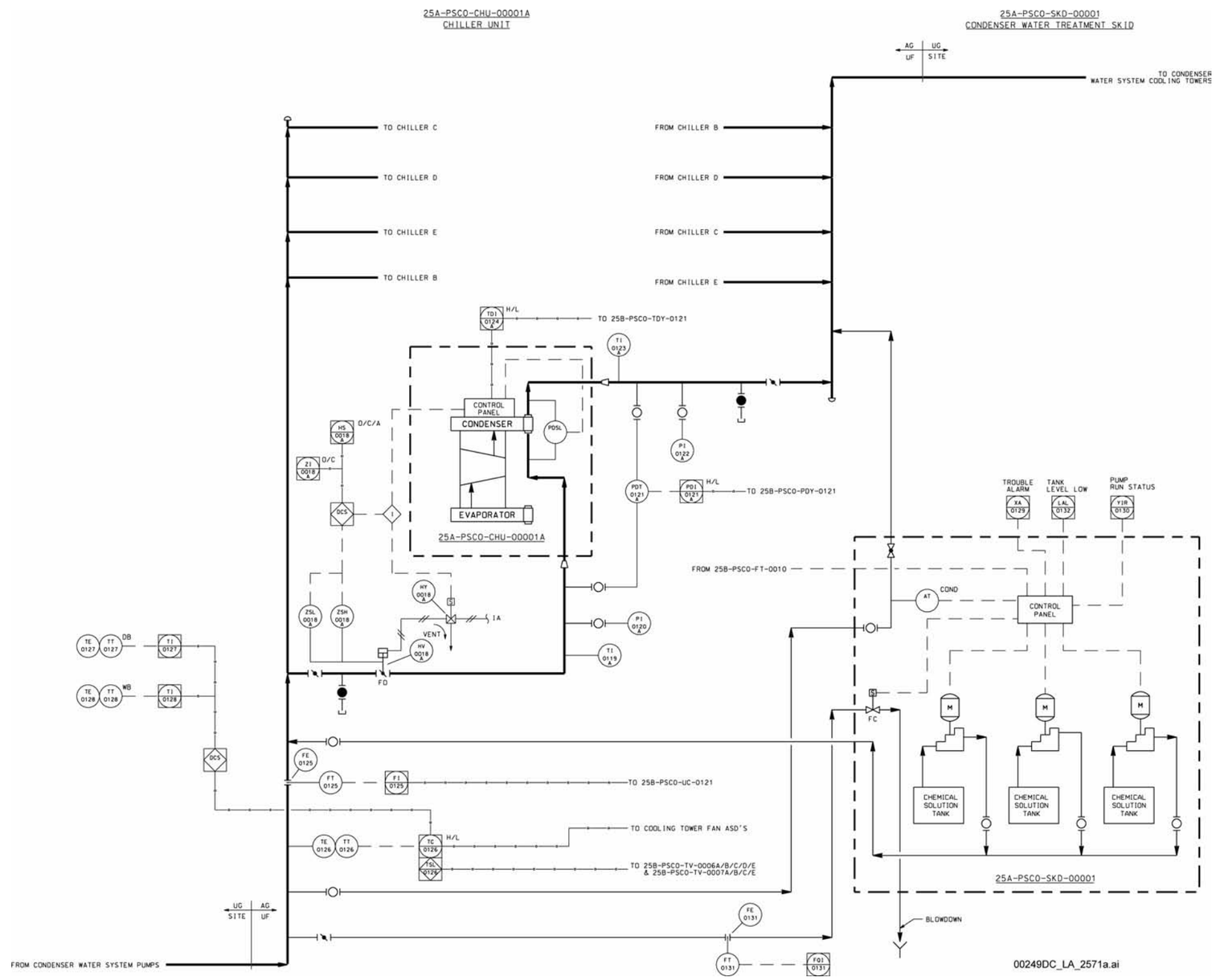

Figure 1.4.4-17. Utilities Facility Condenser Water System Chiller A Piping and Instrumentation Diagram

NOTE: PI = pressure indicator; TI = temperature indicator.

INTENTIONALLY LEFT BLANK

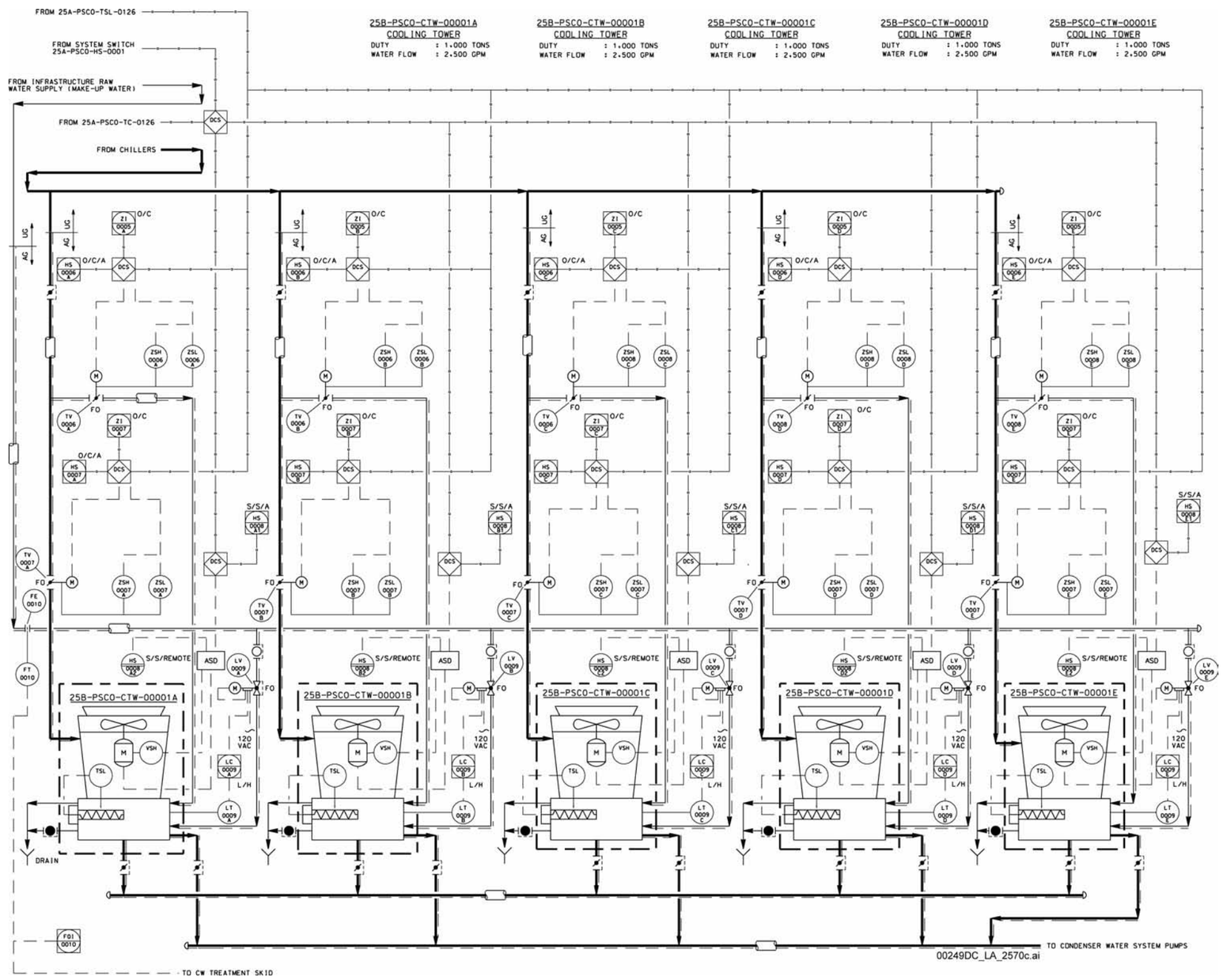

Figure 1.4.4-18. Condenser Water System Cooling Towers Piping and Instrumentation Diagram

NOTE: PI = pressure indicator; TI = temperature indicator.

INTENTIONALLY LEFT BLANK

CONTENTS

Page

1.4.5 Waste Management 1.4.5-1
1.4.5.1 Low-Level Radioactive Waste Management 1.4.5-1
1.4.5.2 Nonradiological Waste Management 1.4.5-7
1.4.5.3 General References 1.4.5-9

INTENTIONALLY LEFT BLANK

TABLES

Page

1.4.5-1. Anticipated Annual Volume of Low-Level Radioactive Waste 1.4.5-11
1.4.5-2. Estimated Radionuclide Concentration of Low-Level Radioactive Waste (Ci/m^3) 1.4.5-12

INTENTIONALLY LEFT BLANK

FIGURES

Page

1.4.5-1. Liquid Low-Level Radioactive Waste Management System Piping and Instrumentation Diagram 1.4.5-13
1.4.5-2. Spent Resin Handling System Piping and Instrumentation Diagram 1.4.5-15

INTENTIONALLY LEFT BLANK

1.4.5 Waste Management

[NUREG-1804, Section 2.1.1.2.3: AC 1, AC 2, AC 6; Section 2.1.1.6.3: AC 1; HLWRS-ISG-02 Section 2.1.1.2.3: AC 2]

This section describes the radioactive and nonradiological waste management methods used at the repository, including a description of the operational processes and the applicable design codes and standards. None of the liquid low-level radioactive waste management subsystem components perform important to safety (ITS) functions; therefore, they are classified as non-ITS. Components and activities for collecting low-level radioactive wastes are separate from those used to collect nonradiological waste.

1.4.5.1 Low-Level Radioactive Waste Management

[NUREG-1804, Section 2.1.1.2.3: AC 1(2), (3), AC 2, AC 6; Section 2.1.1.6.3: AC 1(2)(j)]

1.4.5.1.1 Description

Function—The function of low-level radioactive waste management is to collect and store the repository-generated, low-level radioactive waste streams for processing, packaging, and disposal. The systems that produce low-level radioactive waste streams incident to repository operations are addressed in surface facility Sections 1.2.3, 1.2.4, 1.2.5, and 1.2.6. The drains used to collect potentially contaminated liquid wastes are also described in the facility sections of this SAR and have been categorized as non-ITS.

Description—Dry active waste and wet solid wastes are collected in suitable containers in the area in which the waste is generated and transported to the Low-Level Waste Facility (LLWF) for further sorting and packaging for disposal.

Liquid low-level radioactive waste is collected in designated drains that flow to a liquid waste collection tank in each facility. The tank is sampled, and, if radioactive material concentrations in the liquid exceed established limits, then its liquid content is transported to the LLWF to be processed; otherwise the liquid content is transported to the evaporation pond. Liquid low-level radioactive waste collected in the Wet Handling Facility (WHF) tank is pumped to the collection tanks adjacent to the LLWF. The equipment for pumping this liquid low-level radioactive waste is shown in Figure 1.4.5-1. Water processing is performed using equipment designed using the methods and practices of ANSI/ANS-40.37-1993, *American National Standard for Mobile Radioactive Waste Processing Systems*.

Potentially radioactive ventilation air flows and off-gases from cask sampling are discharged to the atmosphere after filtration by the facility heating, ventilation, and air-conditioning (HVAC) systems.

A description of the LLWF is presented in Section 1.2.8.1.1.5. Figures in Section 1.2.8 show the general layout and organization of the facility. Additional discussion of these activities is presented in the following sections. Disposal of low-level radioactive waste is addressed in Section 5.11.3.2.4.

1.4.5.1.1.1 Solid Low-Level Radioactive Waste Management

During operation of the repository, solid low-level radioactive waste is generated in the following waste handling facilities: the Initial Handling Facility (IHF), the three Canister Receipt and Closure Facilities (CRCFs), the WHF, and the Receipt Facility (RF). Solid low-level radioactive waste management handles three radioactive waste streams: the dry solid low-level radioactive waste stream, the wet solid low-level radioactive waste stream resulting from water processing or decontamination activities that require some processing activity to meet waste disposal criteria at a disposal facility, and the empty dual-purpose canister (DPC) stream.

Dry solid low-level radioactive waste streams include:

- Compactible solids (paper and cloth), such as personal protective clothing, swipes used to survey components for external contamination, and miscellaneous trash and materials used for cleaning in contaminated areas
- High-efficiency particulate air filters used to remove airborne contamination
- Noncompactible solids, such as contaminated tools or activated components.

Wet solid low-level radioactive waste streams include:

- Spent ion-exchange media
- Mechanical filters, pool vacuum and underwater filters, and material collected by the pool vacuum system
- Mop heads, wet rags, sponges, and similar wet cleaning products used in contaminated areas.

Dry solid low-level radioactive waste is collected, transferred to the LLWF, and stored for eventual packaging and shipment. Containers of wet solids, except spent resins associated with the pool water treatment, are similarly transferred to the LLWF and stored until processed in order to ensure that the final waste form meets the acceptance criteria of the offsite disposal facility. Spent resins from the pool water treatment system ion exchangers are dewatered at the WHF by mobile processing equipment. Mobile processing units used to process waste are designed using the methods and practices of ANSI/ANS-40.37-1993 (BSC 2007, Section 4.9.4.1).

Spent resin is sluiced from the ion-exchange vessel with clean pool water. The pool water is extracted from the main pool water treatment return line downstream of the filtration and ion-exchange equipment, but upstream of (prior to) the pool cooling equipment. The flow rate of the sluicing pool water is sufficient to fluidize the resin bed and is controlled via a flow control valve. If the pressure in the return line is not sufficient to fluidize the resin due to the resin bed being compacted, compressed air may be utilized to break up the compaction and then pool water utilized to fluidize the bed. A pump is used to transfer the fluidized resin to the mobile processing equipment where the resin slurry will be collected and dewatered. The piping design and layout complies with the provisions for liquid radioactive waste treatment system piping in accordance with Regulatory

Guide 1.143. Storage tanks and other processing equipment are contained within berms or diked areas/rooms that collect any spillage or system leakage. The spent resin system is designed so that there is a recirculation path that may be utilized if the mobile processing container is unable to receive resin slurry. The mobile processing equipment filters the water removed from the resin slurry and returns this water by stainless steel piping routed to the WHF C3 liquid low-level waste collection system. The spent resin handling system process and instrumentation diagram is shown on Figure 1.4.5-2.

DPCs may be used to ship commercial spent nuclear fuel (SNF) to the repository. Unloaded DPCs, including removed lids, will be processed as low-level radioactive waste. The commercial SNF in DPCs is removed only in the WHF. Empty DPCs in shielded transfer casks are removed from the pool in the WHF; are drained of water, with residual fissile material removed, if any; and are inspected. The empty DPCs are then transported to the LLWF in a suitable package. Empty DPCs are stored in the LLWF until removed.

1.4.5.1.1.2 Liquid Low-Level Radioactive Waste Management

Liquid low-level radioactive waste consists of primarily three liquid waste streams:

- **Equipment Drains**—Pool water treatment and spent resin handling system drains, HVAC condensate, heating water and chilled water loop pump seal leakoffs, mop water from contaminated areas, and emergency shower and eyewash water.

- **Decontamination Wash Water**—Water from decontamination of transportation casks; shielded transfer casks; transportation, aging, and disposal (TAD) canisters; and DPCs coming out of the pool in the WHF. The decontamination process and the decontamination water treatment system are discussed in Section 1.2.5.3.3.

- **Floor Drain System**—Collected fire suppression water from potentially contaminated areas.

The liquid low-level radioactive waste subsystem is designed for collection of low-level radioactive waste liquids and potentially radioactive waste liquids in the waste handling facilities.

The operation of the HVAC systems in the waste handling facilities generates small amounts of condensation on the cooling coils. Pump seal leakoffs and maintenance activities on the pool water treatment, spent resin handling, and chilled and heating water systems also generate small amounts of water. Emergency showers, eyewash stations, and utility sinks for disposal of water used in tool or area decontamination operations are also potential sources of contaminated water to the equipment drains tank. While liquid waste is expected to be free of radioactive contamination, it will be collected in the equipment drainage system in each facility and will be monitored for radioactive contamination before being managed as nonradioactive industrial wastewater. Figures in Sections 1.2.3, 1.2.4, 1.2.5, and 1.2.6 show the collection systems in the handling facilities. Should liquid waste be contaminated, the contents of the tank will be transferred to a liquid waste collection tank at the LLWF for storage until processed, and the solid products of processing (for example, filters and ion-exchange resins) managed as solid low-level radioactive waste. Once the equipment drain system becomes contaminated, liquid entering the system will be treated as contaminated

waste. The system will be decontaminated before wastewater can be processed as industrial wastewater.

Decontamination activities in the WHF may generate contaminated water. Contaminated water from decontamination operations is collected into a collection tank. Contaminated liquid waste from the collection tank located in the WHF near the decontamination pit is processed in the decontamination water treatment system and recycled for subsequent reuse in decontamination. Wet solid radioactive materials generated during the treatment process are separated, collected in appropriate containers, and transferred to the LLWF to be processed and managed as solid low-level radioactive waste. The decontamination system is further discussed in Section 1.2.5.3.3.

Actuation of the fire suppression system in a handling facility generates water that may become contaminated with radioactive materials. Each of the handling facilities is equipped with a floor drain system that collects the fire suppression water and one or more collection tanks. Collected fire suppression water will be sampled and transferred to the evaporation pond or to the LLWF waste tank for processing as appropriate. Criteria for determining whether wastewater can be disposed of by evaporation will be developed as part of the environmental radiological monitoring program discussed in Section 5.11.3.11.

Liquid waste collects in local sumps in the handling facility as described in Sections 1.2.3 through 1.2.6. The collection of water is segregated based upon the confinement area designations at the source of the water. Liquid waste is transferred to one of two liquid waste collection tanks at the LLWF using tankers or the pump in the WHF.

The liquid low-level radioactive waste management subsystem includes connections for a portable pump that can be used to transfer the contents from either of the collection tanks at the LLWF to mobile processing equipment. The portable pump may also be used to transfer the stored liquid between collection storage tanks. The system includes a third tank for the receipt of processed water.

Rainwater runoff and snow and ice melt from the exterior of the surface facilities do not come into contact with the interior of the facilities; therefore, collection and storage of this liquid as radioactive waste is not required.

Components of the liquid low-level radioactive waste management subsystem will be maintainable over the expected life span of the surface facilities; however, this may include long-term replacement of major components. Maintenance requirements are minimized because the components may contact and retain radioactive contamination.

The components of the liquid low-level radioactive waste management subsystem are sized and designed for continuous or intermittent duty for low-level liquid waste management operations. The liquid waste sumps, piping, and pumps may retain radioactive particles. Design considerations include sump, piping, and pump configurations, which minimize holdup of radioactive material and personnel exposure. In addition, the design includes the capability to flush the system.

The liquid low-level radioactive waste collection and process tanks are designed to include tank and valve configurations that minimize entrapment of radioactive particles and minimize personnel exposure.

The handling facilities are designed to withstand natural phenomena as described in Section 1.2.2.1 and Table 1.2.2-9. The design of the LLWF structure is addressed in Section 1.2.8.1.1.5.

Local sumps are integral to the concrete structure of the handling facilities and coated with a protective coating using the methods and practices of ASTM D 5144-00 (BSC 2007).

The liquid low-level radioactive waste management subsystem pump is made of stainless steel. Piping components are stainless steel designed and fabricated in accordance with ASME B31.3-2004.

The liquid low-level radioactive waste management subsystem tanks are vertical and fabricated of stainless steel. These tanks are designed and fabricated in accordance with API Std 620 and using the methods and practices of *International Building Code 2000* (ICC 2003) for consideration of natural phenomena.

The liquid low-level radioactive waste management subsystem collection tanks and process tank located at the LLWF are within a concrete curbed enclosure with a volume capable of containing the volumes of the three tanks.

A concrete pad with curb adjacent to the LLWF serves as a loading area for the mobile processing equipment.

The liquid low-level radioactive waste collected in the waste handling facilities is either transported manually or pumped to the liquid low-level radioactive waste management subsystem tanks located at the LLWF. The system includes two collection tanks to receive the liquid from the handling facilities and one process tank to receive treated water returned from the mobile processing equipment. The system has pumps, valves, and piping that allow mobile processing equipment to be connected to the collection tanks and the process tank. As necessary, the mobile system can receive the liquid, process the liquid through appropriate cleanup media, and then return processed liquid to the process tank. The media in the mobile processing equipment will be packaged and transported off site for disposal in accordance with the applicable regulations. Figure 1.4.5-1 shows the liquid low-level radioactive waste management subsystem. The components in the system are designed in accordance with Regulatory Guide 1.143.

1.4.5.1.1.3 Gaseous Low-Level Radioactive Waste Management

Repository operations will not result in significant amounts of gaseous radioactive effluents. SNF and high-level radioactive waste (HLW) handled and emplaced at the repository consist predominantly of SNF and HLW that have been in storage for long periods of time, at least 5 years. Much of the radioactive gases generated within the SNF during reactor operations will have decayed prior to receipt at the repository.

HLW will arrive at the repository in sealed canisters and none of the handling operations involve venting of the contents to the atmosphere. Most of the SNF will arrive at the repository in sealed canisters that will not be vented to the atmosphere. Some SNF will arrive as uncanistered fuel assemblies or in DPCs that will be opened. Thus, it is possible that SNF handling and transfer

operations at the repository could result in the release of small amounts of radioactive gases. The locations inside the surface facilities where these gases could be released are:

- IHF, CRCF, RF, and WHF during gas sampling of incoming transportation casks
- WHF pool area during transfer of uncanistered SNF assemblies
- WHF pool area during opening of DPCs.

Once the SNF fuel assemblies are placed into a TAD canister, they are contained within a sealed canister that will not be vented during subsequent handling operations.

The gaseous low-level radioactive waste streams include:

- Cask cavity gas sampling
- Cask cooling
- TAD canister inerting
- DPC canister cooling
- DPC cavity gas sampling.

Gaseous waste streams are filtered to remove radioactive particulates. Service gases (such as argon and helium) are discharged upstream from the high-efficiency particulate air filters to the nuclear HVAC system, which ensures that releases to the atmosphere are monitored. After the radioactive particulates are removed, the gas is discharged to the atmosphere along with the HVAC system exhaust.

1.4.5.1.1.4 Mixed Waste Management

Mixed or transuranic waste is not expected to be generated in routine operations.

1.4.5.1.2 Operational Processes

Processing gaseous, low-level radioactive waste streams includes filtration to remove radioactive particulates. The spent filters are managed as a solid waste management activity by removing the filters from their housing, bagging them, and transferring the bagged filters to the LLWF for storage until shipped off site for disposal.

Dry active waste generated in contamination zones of the surface facilities is collected in bags or drums as-generated at the location of generation. Filled containers are sealed and moved to the LLWF as accumulated. Wastes generated in the subsurface facilities are not expected to be contaminated because the waste packages and transport and emplacement vehicle(s) moving through the subsurface are not expected to be contaminated. Waste generated during maintenance activities in the subsurface will also be collected and removed upon completion of the activity. Waste removed from the subsurface will be surveyed for radioactive materials upon removal from a potentially contaminated area or the restricted area in accordance with the survey protocols developed as part of the Radiation Protection Program described in Section 5.11. See Section 1.3.1 for a description of the capability to move men and material in and out of the subsurface to perform maintenance.

Liquid wastes collected from the CRCFs, IHF, and RF are transported by tanker truck, or pumped from the WHF, to one of the two collection tanks located outside the LLWF. Liquid waste collected in the sump of the LLWF is pumped directly to a collection tank. After a sufficient volume of water is collected to justify processing, the wastewater will be processed through appropriate mobile equipment, determined by wastewater characteristics. The wastewater will continue to be processed until it meets the criteria for transfer to the evaporation pond. Then the water will be sent to the process tank for eventual release to the evaporation pond. Water will be processed from the collection tanks to the process tank where it will be sampled.

See Table 1.4.5-1 for anticipated waste volumes and Table 1.4.5-2 for a summary of the radionuclide concentration of each low-level waste form.

1.4.5.1.3 Design Codes and Standards

The liquid and solid low-level radioactive waste management systems are designed in accordance with the codes and standards provided in Table 1 of Regulatory Guide 1.143.

1.4.5.2 Nonradiological Waste Management

[NUREG-1804, Section 2.1.1.2.3: AC 1(2), (3), AC 2(1), (2), (3), AC 6]

1.4.5.2.1 Description

Function—During the operation of the repository, various types of nonradiological wastes are generated. The nonradiological waste management system provides a means for the collection, handling, and disposal of nonradioactive wastes, which include Resource Conservation and Recovery Act of 1976 hazardous wastes, sanitary and industrial solid waste, sanitary sewage, industrial wastewater, and stormwater. The nonradiological waste management system has been categorized as non-ITS. The locations of the evaporation pond, stormwater retention pond, the septic tank and leach field, and other site facilities are also shown in Figure 1.2.1-2. A hazardous material collection depot is located in the vehicle maintenance and motor pool (Area 690).

Description—The nonradiological waste management system encompasses nonradioactive waste generated by repository construction and operations and consists of two subsystems: the hazardous waste subsystem and the nonhazardous waste subsystem.

Hazardous Waste—Hazardous waste may be liquid or solid and includes medical wastes, solid wastes, or a combination of wastes, which because of quantity, concentration, or physical, chemical, or infectious characteristics have to be properly treated, stored, transported, disposed of, or otherwise managed. Universal waste is a special category of Resource Conservation and Recovery Act hazardous waste, which has streamlined collection requirements for wastes, including spent batteries, pesticides, mercury-containing thermostats, and lamps.

The facilities for Resource Conservation and Recovery Act hazardous waste include (1) the project accumulation area in a fire-resistant area, and (2) satellite accumulation areas located on as-needed bases close to the areas of generation but outside the confinement zone boundaries of the nuclear HVAC system.

Nonhazardous Waste—Nonhazardous waste includes sanitary sewage, industrial wastewater, stormwater, used tires, and sanitary and industrial waste.

The facilities for nonhazardous waste streams include an area for collection of oil-contaminated solids, a stormwater retention pond, an industrial wastewater evaporation pond, septic systems leach field for sanitary sewage, and collection facilities for sanitary and industrial solid waste.

Sanitary sewage generated from the facilities at the North Portal is disposed of in a septic tank and drainage field system at the North Portal. Sanitary sewage includes domestic wastewater from toilets, sinks, showers, kitchens, and associated floor drains.

Sanitary solid waste streams include wastes such as trash, food, and landscaping waste. Solid waste containers are placed at the location of such activities for the collection of sanitary solid waste. Sanitary solid waste is disposed of in the Nevada Test Site landfills or sent for disposal in an offsite commercial landfill.

Industrial solid waste, consisting primarily of oil-contaminated debris from maintenance activities, is collected and shipped off site for disposal at an appropriate industrial waste disposal facility.

Recyclables (such as paper, cardboard, aluminum cans, scrap metal, used oils, solvents, coolants, lead acid batteries, and used tires) are recycled or disposed of using offsite commercial services.

1.4.5.2.2 Operational Processes

Hazardous Waste—The hazardous waste subsystem provides for collection, handling, and offsite disposal of materials categorized as Resource Conservation and Recovery Act hazardous waste. Satellite accumulation areas are established for each waste type near the point of generation to temporarily accumulate the wastes. Appropriate waste containers are used and labeled in accordance with 40 CFR Part 262, 49 CFR 172.101, and 49 CFR Part 173.

Removal of the hazardous waste from the project accumulation area for shipment to a treatment, storage, and disposal facility is in accordance with 49 CFR Part 172, 49 CFR Part 173, and Nevada Administrative Code 444, Sanitation (BSC 2007, Section 4.9.8.1). The hazardous waste is shipped from the repository by a service provider licensed to transport hazardous waste to an offsite disposal facility licensed and permitted by the Resource Conservation and Recovery Act.

Universal waste that is generated in routine operations is collected from the work area and moved to a storage unit, where it is processed in accordance with 40 CFR Part 273.

Nonhazardous Waste—Sanitary solid waste (such as trash, food, landscaping waste, and construction debris) is collected in bins located at various locations outside of the waste handling facilities. Trash is collected from the bins by trucks, removed, and taken for disposal at a landfill. The U.S. Department of Energy may use a commercial collection and disposal service for offsite disposal or may use an existing landfill on the Nevada Test Site.

Industrial solid waste (consisting primarily of oil-contaminated debris from maintenance activities) is collected in approved containers, and prepared for shipment off site by commercial transport for disposal at a commercial industrial landfill facility permitted for disposal of industrial waste.

Sanitary sewage from the facilities inside of the geologic repository operations area (GROA), as well as the balance of plant, is disposed of in the septic tanks and leach field systems.

Industrial wastewater discharged from the cooling towers is collected in an evaporation pond at the North Portal. The evaporation pond is provided with a heavy plastic liner. Water collected in the industrial wastewater pond is monitored for radiological contamination.

Stormwater runoff is collected from the process operations area inside of the GROA and directed to a stormwater retention pond (Area 90A) located at the North Portal. The retention pond at the North Portal is sized for precipitation associated with a 100-year storm. Water collected in the stormwater retention pond is monitored for radiological contamination. Other stormwater runoff flow inside the GROA is captured in stormwater detention ponds A, B, and C, which discharge to the environment external to the GROA. Oil-contaminated water passes through oil–water separators, where the oil is recovered for recycling prior to the wastewater discharge.

Examples of recyclable liquids include used oils, coolants, and solvents, which are separated from the waste streams, collected, and shipped to a commercial recycler.

Examples of recyclable solids include lead-acid batteries, scrap metal, paper, aluminum cans, and toner cartridges. Recyclable solids are removed from the waste stream and shipped to a commercial recycler.

1.4.5.2.3 Design Codes and Standards

The following codes and standards are applicable to the nonradiological waste management system:

- Nevada Administrative Code 444, Sanitation
- Nevada Administrative Code 444A, Programs for Recycling
- 40 CFR Part 262.

1.4.5.3 General References

ANSI/ANS-40.37-1993. 1994. *American National Standard for Mobile Radioactive Waste Processing Systems*. La Grange Park, Illinois: American Nuclear Society. TIC: 253794.

API Std 620. 2004. *Design and Construction of Large, Welded, Low-Pressure Storage Tanks, with Addendum 1*. 10th Edition. Washington, D.C.: American Petroleum Institute. TIC: 256365.

ASME B31.3-2004. 2005. *Process Piping*. New York, New York: American Society of Mechanical Engineers. TIC: 258076.

ASTM D 5144-00. 2000. *Standard Guide for Use of Protective Coating Standards in Nuclear Power Plants*. West Conshohocken, Pennsylvania: American Society for Testing and Materials. TIC: 252740.

BSC (Bechtel SAIC Company) 2007. *Project Design Criteria Document*. 000-3DR-MGR0-00100-000-007. Las Vegas, Nevada: Bechtel SAIC Company. ACC: ENG.20071016.0005.

ICC (International Code Council) 2003. *International Building Code 2000*. Falls Church, Virginia: International Code Council. TIC: 251054; 257198.

Nevada Administrative Code 444. Sanitation.

Nevada Administrative Code 444A. Programs for Recycling.

Regulatory Guide 1.143, Rev. 2. 2001. *Design Guidance for Radioactive Waste Management Systems, Structures, and Components Installed in Light-Water-Cooled Nuclear Power Plants*. Washington, D.C.: U.S. Nuclear Regulatory Commission. ACC: MOL.20050516.0258.

Resource Conservation and Recovery Act of 1976. 42 U.S.C. 6901 et seq.

Table 1.4.5-1. Anticipated Annual Volume of Low-Level Radioactive Waste

Facility	Dry Active Waste (ft^3)	Liquid[a] (gal)	Resin (ft^3)	Pool Filters (ft^3)	Prefilters and HEPA Filters (ft^3)	Dual-Purpose Canisters
Wet Handling Facility	9,100	52,000	300	2,600	1,000	6
Initial Handling Facility	520	1,300	NA	NA	430	NA
Receipt Facility	1,300	1,300	NA	NA	1,600	NA
Aging	260	NA	NA	NA	NA	NA
Subsurface	260	260	NA	NA	NA	NA
CRCF 1	1,300	6,500	NA	NA	3,500	NA
CRCF 2	1,300	6,500	NA	NA	3,500	NA
CRCF 3	1,300	6,500	NA	NA	3,500	NA
Liquid Low-Level Waste Facility	920	2,600	NA	NA	540	NA
Estimated Annual Total[b]	16,000	77,000	300	2,600	14,000	6

NOTE: [a]Values listed do not account for fire water discharges; not applicable.
[b]Columns do not sum due to rounding.
HEPA = high-efficiency particulate air; NA = not applicable.

Table 1.4.5-2. Estimated Radionuclide Concentration of Low-Level Radioactive Waste (Ci/m^3)

Radionuclide	HEPA Filters	Dry Active Waste	Pool Filters	Resin	Liquid
^{54}Mn	0.0	7.32×10^{-4}	1.84	2.48	0.0
^{58}Co	0.0	5.59×10^{-3}	6.30	4.74	0.0
^{60}Co	3.59	1.42×10^{-2}	1.61×10^{1}	1.21×10^{1}	1.00×10^{-3}
^{90}Sr	6.76×10^{-1}	0.0	0.0	0.0	0.0
^{99}Tc	1.54×10^{-4}	0.0	0.0	0.0	0.0
^{134}Cs	0.0	6.30×10^{-3}	1.90	1.51×10^{1}	0.0
^{137}Cs	6.63	7.13×10^{-3}	2.15	1.71×10^{1}	1.50×10^{-3}
^{147}Pm	1.05×10^{-1}	0.0	0.0	0.0	0.0
^{151}Sm	4.04×10^{-3}	0.0	0.0	0.0	0.0
^{154}Eu	3.89×10^{-2}	0.0	0.0	0.0	0.0
^{238}Pu	4.56×10^{-2}	0.0	0.0	0.0	0.0
^{239}Pu	2.97×10^{-3}	0.0	0.0	0.0	0.0
^{240}Pu	5.27×10^{-3}	0.0	0.0	0.0	0.0
^{241}Am	1.94×10^{-2}	0.0	0.0	0.0	0.0
^{241}Pu	8.57×10^{-1}	0.0	0.0	0.0	0.0
^{243}Am	3.79×10^{-4}	0.0	0.0	0.0	0.0
^{243}Cm	2.59×10^{-4}	0.0	0.0	0.0	0.0

NOTE: HEPA = high-efficiency particulate air.

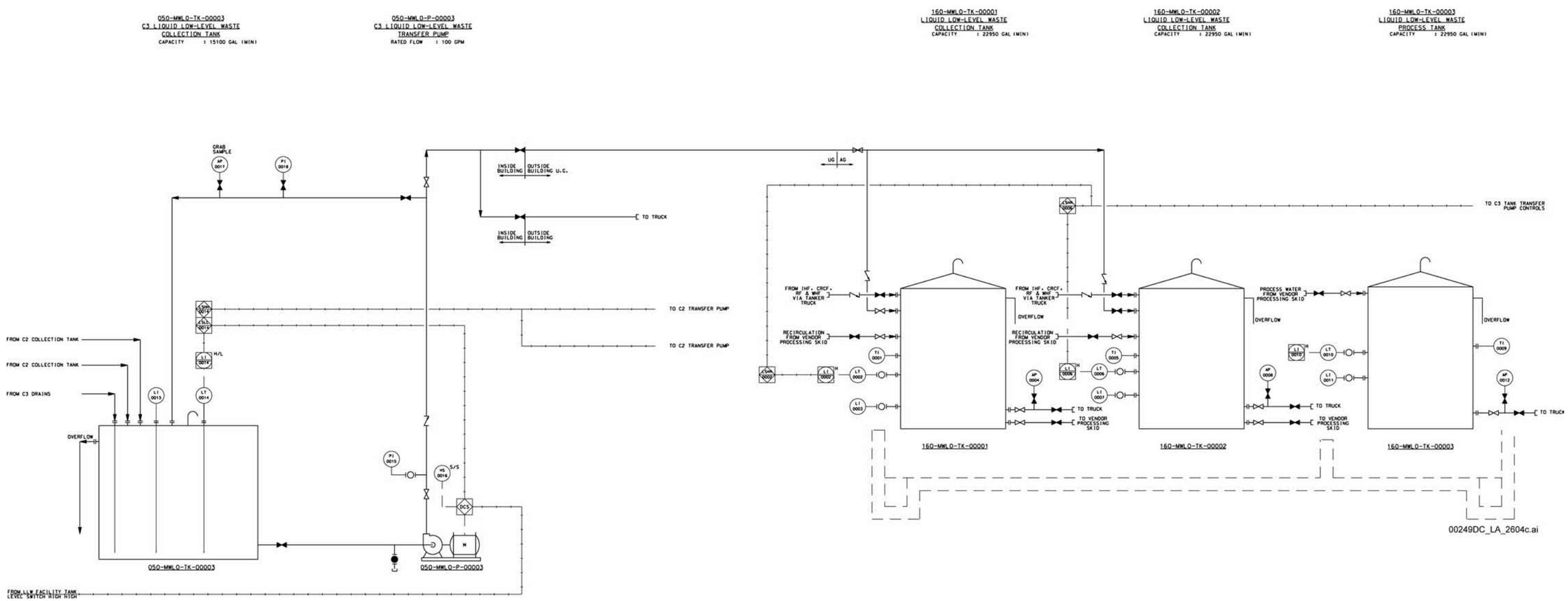

Figure 1.4.5-1. Liquid Low-Level Radioactive Waste Management System Piping and Instrumentation Diagram

INTENTIONALLY LEFT BLANK

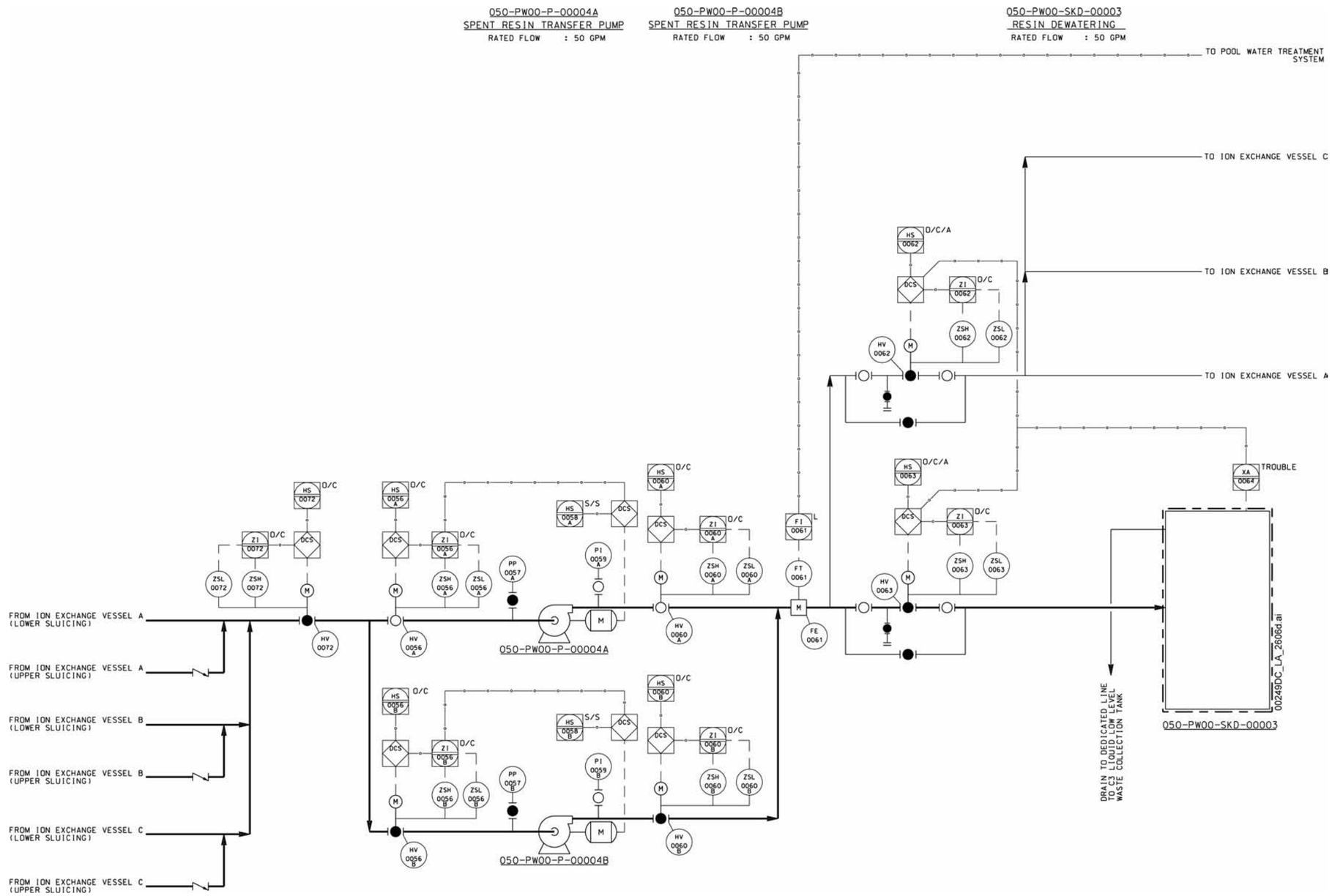

Figure 1.4.5-2. Spent Resin Handling System Piping and Instrumentation Diagram

INTENTIONALLY LEFT BLANK