neutron products inc

22301 Mt. Ephraim Road, P. O. Box 68
Dickerson, Maryland 20842 USA
301-349-5001 FAX: 301-349-5044
e-mail: neutronprod@erols.com

May 16, 2008

ATTN: Document Control Desk
Director, Spent Fuel Project Office
Office of Nuclear Materials Safety and Safeguards
U. S. Nuclear Regulatory Commission
One White Flint North
11555 Rockville Pike
Rockville, Maryland 20852-2738

Re: Neutron Products inc.'s Quality Assurance Program
Approval No. 0121
Neutron's Request for Renewal dated August 21, 2007

Dear Sir:

This is to supplement our request for renewal of Neutron Products inc.'s Quality Assurance Program dated August 21, 2007.

Attached is a copy of Neutron's Quality Assurance Program for the Transportation of Radioactive Materials, Revision 11 dated May 15, 2008 which replaces Revision 8 (previous approval) and Revisions 9 and 10 which were not approved.

The changes from our referenced submission are in Section 5 of Revision 11.

We look forward to receiving the requested renewal. However, if there are any questions or problems with this submission, please let us know.

Sincerely,
Neutron Products inc.

Jerry L. Fogle
QA Manager Radioactive Transportation

Q004
NMSS

QUALITY ASSURANCE PROGRAM

FOR THE

TRANSPORTATION OF RADIOACTIVE MATERIALS

NEUTRON PRODUCTS, INCORPORATED

Revision 11

May 15, 2008

Reviewed for Safety, Compliance and Adequacy for Intended Purpose

Jerry L. Fogle, QA Manager
Radioactive Transportation

Date MAY 15, 2008

Reviewed and Approved

J. A. Ransohoff, President

Date May 15, 2008

This is a controlled document and as such shall only be modified in accordance with the latest revisions of Procedure C 9000, *Preparation of Quality System Documents and Data*, and Procedure C 9001, *Document and Data Control*. This document is valid for internal use only after it has been reviewed and approved with dated signature by all of the above listed authorized personnel.

Not valid for internal use without a control copy number.

Control Copy No. _____

QUALITY ASSURANCE PROGRAM FOR THE TRANSPORTATION OF RADIOACTIVE MATERIALS

Revision 11

TABLE OF CONTENTS

1. INTRODUCTION 3

2. POLICY STATEMENTS 3

3. GENERAL QUALITY ASSURANCE APPROACH 3

4. QUALITY ASSURANCE PROGRAM CONTENT 5
   - 4.1 Quality Assurance Organization 5
   - 4.2 Quality Assurance Program 13
   - 4.3 Design Control 14
   - 4.4 Procurement Document Control 15
   - 4.5 Instructions, Procedures, and Drawings 17
   - 4.6 Document Control 19
   - 4.7 Control of Purchased Material, Equipment and Services 20
   - 4.8 Identification and Control of Materials, Parts and Components 25
   - 4.9 Special Processes 25
   - 4.10 Inspection Control 26
   - 4.11 Test Control 29
   - 4.12 Control of Measuring and Test Equipment 30
   - 4.13 Handling, Storage and Shipping 31
   - 4.14 Inspection, Test and Operating Status 31
   - 4.15 Control of Nonconformances 32
   - 4.16 Corrective Action 33
   - 4.17 Quality Assurance Records 35
   - 4.18 Audits 37

5. CHANGE RECORD 40

Control Copy No. _____

1. INTRODUCTION

1.1 Neutron Products, Inc. (Neutron) was established in 1959 to produce radioisotopes commercially. In part, the company is engaged in the business of selling cobalt-60 sources for teletherapy, intercavity, and industrial applications. Toward this end, company activities include cobalt-59 target design, procurement, transportation, and irradiation, as well as cobalt-60 transportation, processing, encapsulations, delivery, installation, maintenance, and source replacement.

1.2 This Quality Assurance (QA) Program for the Transportation of Radioactive Material has been developed in accordance with the regulations of the NRC contained in 10CFR71, Subpart H, and satisfies the criteria of the subpart.

2. POLICY STATEMENTS

2.1 In keeping with its corporate commitment Neutron Products has provided, and will continue to timely provide, quality products and services to its customers, while undertaking its obligation to do what it can to provide for the safety of company personnel, the public, the environment, and the users of the company's products. This Quality Assurance Program comprises:

- a planning process designed to ensure, to the extent practical, that Neutron performs to its commitments;
- an investigative process that is designed to detect deficiencies and evaluate their causes; and,
- a remedial process for correcting or mitigating known deficiencies and reducing the likelihood of a recurrence.

2.2 All aspects of the shipping of radioactive material shall adhere to the safety and quality requirements of 10CFR71, Subpart H, and this quality assurance program.

2.3 Unsafe conditions will not be tolerated in favor of other corporate objectives, such as cost and scheduling considerations.

3. GENERAL QUALITY ASSURANCE APPROACH

3.1 10CFR71, Subpart H, provides eighteen requirements for establishing and implementing a quality assurance program for components of packaging which are important to safety. The Neutron Quality Assurance Program complies with these requirements. This QA program represents Neutron's application of these requirements to the shipping of radioactive materials. The QA approach presented in this document consists of the following key elements:

- Planning - what to do to provide quality;
- Documenting - the plans in a controlled format subject to review and approval;
- Execution - of the plans established;
- Recording - objective evidence of the execution and verifications; and,
- Inspecting and Auditing - to verify that activities are properly performed and documented.

3.2 Pursuant to Sec. 4.18, Neutron division management will assess the scope, status, implementation, and effectiveness of the QA program at least every twelve months, to ensure that the program is adequate and complies with applicable regulations.

3.3 The following are definitions of key terms in the QA program:

Packaging - the assembly of components necessary to ensure compliance with NRC standard for *Packaging and Transportation of Radioactive Material,* 10CFR 71. Packaging may consist of one or more receptacles, thermal insulation, absorbent materials, radiation shielding, and devices for cooling and absorbing mechanical shocks. Tie down systems and other auxiliary equipment may be designated as part of packaging.

Off-site location - a location other than Neutron's Dickerson, Maryland facility, where the shipment or receipt of radioactive material is controlled by Neutron.

Quality transportation - the safe and efficient transport of radioactive materials from one site to another in accordance with applicable requirements, and the documentation of all activities pertinent thereto.

Package - The packaging as herein defined together with its radioactive contents as presented for transport.

Quality related items - any packaging items for which the design, purchase, fabrication, handling, shipping, storing, cleaning, assembly, inspection, testing, operation, maintenance, repair and modification are safety related and to which quality assurance requirements apply.

3.4 The content of Neutron Products' QA program is organized in Sec.4 in conformance with the 18 numbered paragraphs of Subpart H that delineate the requirements of the regulation.

4. QUALITY ASSURANCE PROGRAM CONTENT

4.1 Quality Assurance Organization

4.1.1 Neutron Products' shipping and transport of radioactive materials is the responsibility of its Division III and operates under the Quality Assurance organization of that division. However, commitment to safety and quality is considered a duty of all employees regardless of job function. Each Neutron Products employee has the responsibility to bring any reservations about safety, quality, or compliance with any applicable procedure or regulation to their supervisor, and/or to the applicable Neutron Products' Radiation Safety Officer, Quality Assurance Manager, or their designees, and to halt affected activities until the issue is resolved. Bringing reservations to their supervisor and/or Neutron Products' management will not be considered as a sign of disrespect by Neutron Products' management. Rather, failure to bring reservations to their supervisor and/or Neutron Products' management will be considered as a shirking of duty to all concerned parties.

4.1.2 Assignment of QA/QC responsibilities

4.1.2.1 QA and QC activities directed to the design, fabrication, assembly, and testing of new packaging shall be performed by individuals other than those who performed the activity being inspected.

4.1.2.2 QA/QC functions for activities not entailing the design, fabrication, assembly, and/or testing of new packaging shall be in accordance with the requirements of Subsection 4.1.5.10.

4.1.3 For the purposes of this program, job functions identified under Sec. 4.1.5 need not be actively assigned, providing that the activities related to the responsibilities and authorities of that function are not actively performed. For example, a Fabrication Manager need not be named pursuant to Sec. 4.1.5.7, providing no fabrication activities are being performed. The QA Manager Radioactive Transportation shall assure that all affected QA/QC functions are assigned to qualified personnel prior to the initiation or resumption of any activities within the scope of this program.

4.1.4 Individuals who perform quality functions shall report quality related problems to Neutron Products upper management:

- through the provisions of this Quality Assurance program and its implementing procedures;
- separately, as required under the Radiation Protection Program or applicable procedures to an appropriate Radiation Safety Officer, and,
- as commensurate with the degree of significance and the adequacy of prior response, directly to Neutron Products' President or Executive Management.

4.1.5 Qualifications, Responsibilities, and Authority of QA/QC Personnel

4.1.5.1 The President:

- reviews and approves the Quality Assurance Program for the Transportation of Radioactive Materials as indicated by his signature on the cover of the original of this document;
- has authority to halt any operation which he deems to be unsafe or in violation of applicable regulations;
- is the addressee of internal audit reports prepared pursuant to Sec. 4.18.4; and,
- notifies the NRC within 5 days after being notified of an evaluation resulting in the finding of a substantial safety hazard, per 10CFR21, and informs the reporting employee when notification to the NRC is made.

4.1.5.2 The QA Manager Radioactive Transportation

The president shall appoint a QA Manager Radioactive Transportation, who has, at a minimum:

- comprehension of the applicable regulations involving the packaging and transport of Type B packages and the provisions of this QA program;
- working knowledge of the Nuclear Regulatory Commission (NRC), Department of Transportation (DOT), International Atomic Energy Agency (IAEA), International Civil Aviation Organization (ICAO), and International Maritime Organization (IMO) regulations applicable to the domestic and international transport of Type B packages; and,
- working knowledge of the regulatory system for certification and approval requirements for design, fabrication, use, maintenance and operations of NRC certified Type B transport packages; DOT Specification Type B Transport Packages; DOT revalidated Type B Transport Packages of foreign origin, and the applicable quality assurance requirements of 10CFR71, Subpart H.

The QA Manager Radioactive Transportation:

- has independent authority to halt any operation which he deems to be unsafe;
- has the authority and responsibility to secure such additional assistance as is necessary to ensure that operations are conducted in conformance with quality assurance requirements, and to suspend operations until these requirements have been met;

- reports directly to the President;
- has the overall responsibility for training in the Quality Assurance System;
- is responsible for training the applicable Division III employees in:
  - 10CFR21;
  - the NRC Approved Quality Assurance Program for the Transportation of Radioactive Materials; and,
  - Certificates of Compliance and Certificates of Competent Authority for packages used by Neutron;
- provides the records clerk the schedule for the Corporate Calendar of training for all employees with responsibilities involving transportation of radioactive materials in accordance with written procedures;
- documents on an annual basis the continuing proficiency of all employees with responsibilities involving transportation of radioactive materials in accordance with written procedures;
- reviews and approves the Quality Assurance Program for the Transportation of Radioactive Materials and its implementing procedures as indicated by his signature on the covers;
- is responsible for administering this program;
- assigns individuals to QA/QC functions including lead auditors;
- has the responsibility to assure that all shipments of radioactive sources and empty radioactive packaging are reviewed and approved by himself or a qualified designee.
- is responsible for resolving nonconformances in accordance with Sec. 4.15;
- is responsible for approving and verifying corrective actions in accordance with Sec.4.16; and,
- reviews and approves quality assurance audits in accordance with Sec. 4.18

4.1.5.3 The Radiation Safety Officers for By-Product Materials License MD-31-025-01 (RSO- Facility) and MD-31-025-03 (RSO-03)

In accordance with Neutron's Radiation Protection Program and subject to regulatory approval, the President shall appoint a RSO-Facility, who has in addition to other qualifications, at a minimum:

- comprehension of the applicable regulations involving the packaging for, and transport of packages containing, radioactive waste, and the provisions of this QA program; and,
- working knowledge of the Certificates of Compliance and Certificates of Competent Authority which are applicable to the transport of Type B packages used for radioactive waste.

The RSO-Facility:

- has independent authority to halt any operation which he deems to be unsafe pending final resolution;
- reports directly to the President, but on all QA matters involving shipping of radioactive waste operates under the authority of the QA Manager Radioactive Transportation; and,
- plans, reviews, and approves, all shipments of radioactive waste and empty packaging for radioactive waste;

In accordance with Neutron's Radiation Protection Program and subject to regulatory approval, the President shall appoint a RSO-03, who has in addition to other qualifications, at a minimum:

- comprehension of the applicable regulations involving the packaging for, and transport of packages containing, radioactive sources, and the provisions of this QA program; and,
- working knowledge of the Certificates of Compliance which are applicable to the transport of Type B packages used for radioactive sources.

The RSO-03

- has independent authority to halt any operation which he deems to be unsafe pending final resolution; and,
- reports directly to the President, but on all QA matters involving shipping of radioactive sources operates under the authority of the QA Manager Radioactive Transportation;
- plans, reviews and approves all shipments of radioactive sources and empty packaging for radioactive sources; and,

- evaluates or causes to be evaluated all reports under 10CFR21.

4.1.5.4 The Manager of the LAA shall have, at a minimum:

- comprehension of the applicable regulations involving the packaging and transport of Type B packages containing radioactive sources, and the provisions of this QA program; and,

- working knowledge of the DOT specifications, Certificates of Compliance, and Certificates of Competent Authority, applicable to the domestic and international transport of the Type B packages used for shipping radioactive sources.

The Manager of the LAA

- reports directly to the QA Manager Radioactive Transportation on all QA matters involving shipping; and,

- monitors the selection, loading, receipt and storage of packages for radioactive sources at the Dickerson facility.

4.1.5.5 Field Supervisors have as a minimum:

- comprehension of the applicable regulations involving the packaging and transport of Type B packages containing radioactive sources and the provisions of this QA program; and,

- working knowledge of the DOT specifications, Certificates of Compliance and Certificate of Competent Authority applicable to the domestic and international transport of the Type B packages used for radioactive sources.

Field Supervisors:

- report directly to the QA Manager Radioactive Transportation on all QA matters involving shipping; and,

- monitor the receipt, loading, and preparation for shipment of packages used for teletherapy sources at sites other than the Dickerson facility.

4.1.5.6 The Manager, Radioactive Shipping Packages, shall have as a minimum:

- demonstrated experience with the fabrication, maintenance and/or repair of equipment similar in scope, materials of constructions, etc. to packaging;

- working knowledge of the drawings, specifications, etc. of the packaging to be maintained or repaired; and,

- working knowledge of the applicable requirements of this QA program.

The Manager, Radioactive Shipping Packages:

- reports directly to the QA Manager Radioactive Transportation on all quality items related to the maintenance and repair of packaging;
- procures materials and services for the maintenance and repair of packaging in accordance with this QA program;
- monitors the maintenance and repair of packaging which have been designed by Neutron; and,
- monitors any maintenance or repair associated with packaging which has been designed by others, only after receiving written approval and instructions from the designer of the package on how to proceed in a manner which is consistent with their QA program.

4.1.5.7 The Fabrication Supervisor shall have, at a minimum:

- demonstrated experience with the fabrication, maintenance and/or repair of equipment similar in scope and materials of constructions to transport packaging;
- working knowledge of the drawings, specifications, etc. of the transportation package to be maintained or repaired; and,
- working knowledge of the applicable requirements of this QA program.

The Fabrication Supervisor:

- reports directly to the QA Manager Radioactive Transportation on all QA matters involving transport package fabrication; and,
- fabricates and assembles the specified item in accordance with the applicable, approved drawings, specifications, procedures, and instructions.

4.1.5.8 The Division III Records Clerk:

- reports directly to the QA Manager Radioactive Transportation on all QA matters pertaining to this QA program;
- stores the records pertaining to this QA program in accordance with Sec 4.17;
- maintains the Corporate Calender and notifies the individuals responsible for required actions on a timely basis and, when action is not taken, their supervisors; and,

- maintains the HAZMAT training records for as long as the employee is a HAZMAT employee and three years after last activity of the employee.

4.1.5.9 The Document Control Coordinator (Div. III):

- reports directly to the QA Manager Radioactive Transportation on all matters pertaining to this QA program;
- distributes new and revised documents to include control copy numbers;
- files original, controlled documents pertaining to this QA program;
- maintains and updates master lists; and,
- withdraws superseded documents and appropriately destroys withdrawn copies.

4.1.5.10 Quality Control Personnel

The QA Manager Radioactive Transportation shall assign responsibilities for QC functions, including but not limited to:

- confirmation that the consignee is authorized to possess the radioactive material;
- confirmation that Neutron is authorized to install the source(s);
- confirmation that the source to be exchanged is to be shipped to an authorized consignee;
- confirmation that the package is authorized for the proposed shipment;
- inspection of the package per the applicable Certificate of Compliance;
- confirmation that the package radiation leakage and contamination levels are within acceptable limits;
- confirmation that the vehicle driver is HAZMAT qualified;
- confirmation that the vehicle radiation leakage and contamination levels are within acceptable limits;
- confirmation that the package is properly labeled and marked;
- confirmation that the vehicle is properly placarded, labeled, and marked;
- review of the final shipping papers;

- verification of materials and services purchased for fabrication, repair, modification (only after the requirements of Section 4.3 "Design Control" have been satisfied) and maintenance of shipping packages are in conformance with specifications; and,

- inspection of fabrication and repair of packaging at designated hold/witness points and after completion.

For QA and QC activities directed to the design, fabrication, assembly, and/or testing of new packaging, the QA Manager Radioactive Transportation shall assign responsibilities to qualified individuals who did not perform the work.

Any such individual so assigned shall be authorized and obliged to:

- stop unsatisfactory work;

- stop delivery or installation of non-conforming material; and,

- directly communicate with appropriate Neutron Products managers as necessary to ensure that QA procedures important to safety have been accomplished.

4.1.6 In addition to specific qualifications given in Sec. 4.1.5, all personnel assigned job functions under this program shall have received the required training pursuant to the DOT training requirements of 49CFR172, Subpart H, applicable to Hazardous Materials Employees, as defined therein, involved with packaging and transport of radioactive materials.

4.1.7 At Neutron, the line organization has the responsibility for the planning, execution, and documenting of activities. The QA Manager, as appropriate, participates and concurs in these activities and has the responsibility for auditing tasks. Line management at Neutron shall be responsible for providing that:

- Personnel responsible for performing quality related activities are instructed as to the purpose, scope and implementation of the QA program, and applicable procedures;

- Personnel performing quality related activities are qualified in the principles and techniques of the activity being performed; and,

- Proficiency of personnel performing quality related activities is maintained.

4.1.8 The organization structure for Division III is shown in Figure I

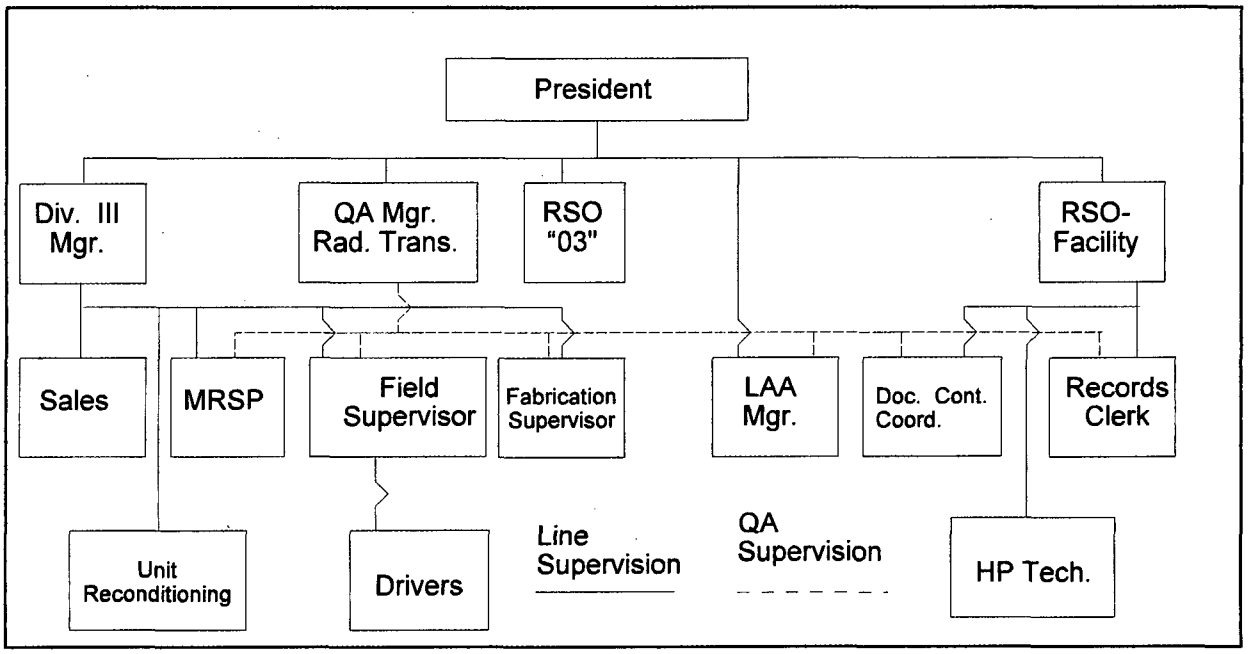

Figure 1 - Division III Organization Chart

4.2 Quality Assurance Program

4.2.1 The quality assurance program elements described in this document are further delineated and implemented by quality assurance procedures and detailed operational procedures that cover all quality related transport operations at Neutron Products. These procedures address the personnel, sequence of steps to be followed, and the equipment to be used in safety related operations.

4.2.2 Implementing procedures shall be documented and undergo a review and approval process to assure their adequacy and compliance with applicable regulations and this program.

4.2.3 The QA Manager Radioactive Transportation shall maintain a current list of all documents related to this program.

4.2.4 Safety and quality related activities shall be performed by qualified personnel. The qualification for personnel engaged in these operations is established by Neutron Products' division management. Training, which is primarily on the job, augmented by written and classroom style instruction, is required before personnel perform safety related activities. Adequate records of training activities shall be maintained. Such records should reflect the basis on which individuals are qualified to perform functions important to safety.

4.2.5 For persons performing special processes requiring certification by a standards setting organization, the QA Manager Radioactive Transportation shall obtain and document proof of certification, including the period and terms of the certification's validity.

4.3 Design Control

4.3.1 Prior to the design, redesign, modification, or changes/revisions of any packaging which falls within the scope of this program occurring after the effective date of this revision, a documented procedure shall be established and maintained for design control.

4.3.2 This procedure shall address control of:

4.3.2.1 The design process, including:

- measures to ensure that packaging designs are reviewed to emphasize critical parameters that can be controlled by test or inspection;
- identification of test and inspection criteria and quality standards; and,
- document and data control for all drawings and specifications to assure that:
  - design documents and data are checked, reviewed and approved;
  - revisions to the design process shall be reviewed in the same manner as the original design process and shall require that such revision be performed by individuals other than those who performed the activity being reviewed;
  - documents and data are issued and distributed to all appropriate parties;
  - obsolete documents and data are withdrawn from use in such a way as to prevent their inadvertent use;
  - master and original copies are controlled; and,
  - current "as-built" configurations are documented and such documents are controlled and maintained.

4.3.2.2 Control of design input, including

- measures to assure that appropriate codes and standards are used in the design of packaging;
- that all design parameters, e.g., shielding, heat transfer, and decontamination are properly considered at all steps in the design process; and,

- that maintenance, repair, handling, storage, and cleaning requirements are specified in design documents.

4.3.2.3 Control of design verification, including:

- methods for verifying the design adequately addresses all design inputs, such as, qualification testing, alternative calculations, and design review;
- personnel responsible for design verification shall not be the original designers themselves;
- If, during the design process, the design is modified, the verification process shall be repeated, if possible, by the same individuals who reviewed and approved the original design, or if not possible, by other individuals employed in the same functions;
- Design revisions which could result in conditions differing from those prescribed by a current Certificate of Compliance shall be approved by the NRC prior to implementation;
- Except for qualification testing requiring a prototype, design verification shall be completed prior to release for procurement and fabrication; and,
- When testing is used for design verification, the prototype shall be subjected to the most adverse design conditions.

4.4 Procurement Document Control

4.4.1 All purchase orders, requests for quotation, contracts and other procurement documents related to the purchase of packaging, packaging components, or services for the design, fabrication, or testing of packaging or packaging components shall be in written documented form.

4.4.2 The QA Manager Radioactive Transportation, or his knowledgeable designee, shall review all procurement documents against applicable Certificates of Compliance, design documents, procedures, and/or other relevant documents to assure that the procurement document(s) correctly specifies the required goods and/or services. Approval shall be indicated by dated signature on the original.

4.4.3 Except as provided in Sec. 4.4.8, all procurement documents related to the purchase of packaging, packaging components, or services for the design, fabrication, or testing of packaging or packaging components shall include as applicable:

- a statement of prospective work to be performed by the vendor;

- the design basis technical requirements or references thereto, including applicable regulatory requirements, material and component identification requirements, drawings, specifications, codes and standards, instructions, and test and inspection requirements;

- Applicable 10CFR71, Subpart H, requirements which shall be complied with and described in the vendor's (and where applicable in any sub-vendor's) QA program. These QA programs shall be evaluated in accordance with Sec 4.7.2. The scope and extent of the vendor's (or sub-vendor's) QA program shall depend on the nature of the particular goods or services to be rendered;

- a request for access as necessary to the vendor's (or sub-vendor's) physical plant and records for the conduct of such inspections and/or audits as are reasonably required;

- identification of documentation to be provided by the vendor;

- identification of records to be retained, controlled and maintained by the vendor;

- identification of records, if any, to be provided by the vendor; and,

- requirements for reporting nonconformances and for approving their disposition.

4.4.4 In the event that procurement documents require revision, the revised documents shall be re-evaluated and approved pursuant to Sec. 4.4.2.

4.4.5 Revised procurement documents shall clearly indicate that they supercede all earlier revisions and identify the revisions that they supercede.

4.4.6 When a procurement document is revised prior to issue and distribution to vendors, all copies of the obsolete documents shall be prevented from inadvertent use either by destruction or by clearly marking, "obsolete, not to be distributed to vendor."

4.4.7 When a procurement document is revised subsequent to issue and distribution, vendors shall be advised in writing that the document is a revision and of the nature of the changes.

4.4.8 The purchase order which includes the specifications directly or by reference is the only document that needs review and approval for purchased materials for maintenance which are:

- included in the package specification and cannot be changed without a revision to the applicable DOT specification, Certificate of Compliance and/or Certificate of Competent Authority; and,

- purchased to commercial specifications.

4.4.9 Copies of all procurement documents shall be retained in accordance with Sec. 4.17.

4.4.10 All purchase orders used for the purchasing of both goods and services for radioactive transportation packages maintained and used by Division III shall contain the following legends:

- With respect to the supply of goods, relating to a facility regulated pursuant to the Atomic Energy Act of 1954, as amended, or the Energy Reorganization Act of 1974, the provisions of Title 10 Code of Federal Regulations, Part 21 (10CFR21) are applicable to this order. No changes shall be made to the specifications, including material or process.

- Vendors for fasteners - Fasteners shall not have head markings that are on the U.S. Customs Service List of Suspect/Counterfeit fasteners.

- Please supply a Certificate of Compliance/Calibration when shipping goods or services designated "Q" in the DQMS column.

4.5 Instructions, Procedures, and Drawings

4.5.1 All activities important to safety shall be accomplished in accordance with documented procedures, instructions, and or drawings. Such activities include, but are not limited to:

- design of packaging;

- fabrication of packaging;

- testing and inspection;

- loading and unloading of packages;

- maintenance of packaging; and,

- storage of packaging;

4.5.2 Documents shall prescribe the methods used for complying with the applicable parts of this QA program and 10CFR71, Subpart H.

4.5.3 As applicable, documents should include:

- a statement of purpose, i.e., what is the documented procedure intended to accomplish?

- a statement of scope - under what circumstances does the document apply?

- appropriate references to applicable programs, procedures, regulations, codes, standards, etc.

- identification of pertinent personnel and their responsibilities and authorities

- information necessary to accomplish the required task in sufficient detail as to assure an acceptable result

- identification of hold points, i.e., steps in a process where work is halted to allow for inspection or testing before continuing, and witness points, i.e., steps in a process which shall be directly observed by QA/QC personnel

- quantitative and/or qualitative acceptance criteria used to verify that the activity has been accomplished safely in accordance with the prescribed procedure. Acceptance criteria shall be derived from the applicable Certificate of Compliance and/or design documents.

  Note: Quantitative criteria include: dimensions, tolerances, dose rates, weights, and other properties which can be measured. Qualitative criteria include conditions, such as, "free from defect," or workmanship samples which are evaluated by inspection and comparison.

- occupational and radiation safety requirements

- record generation and maintenance requirements

4.5.4 In general, procedures, drawings, and instructions shall be prepared by individuals who are knowledgeable of the pertinent processes, requirements, etc. Procedures may undergo several internal and/or external critiques and rewrites prior to the review required under Sec. 4.5.5

4.5.5 All procedures, instructions, drawings, and other documents which fall within the scope of this section including, but not limited to: special process procedures, inspection plans, calibration procedures, test procedures, and manufacturing plans (especially witness and hold points) shall undergo review and approval.

4.5.6 Such review shall include:

- A review of content to verify compliance with applicable Certificates of Compliance, design documentation, and other applicable criteria, and that the document is otherwise adequate for its intended purpose. This review shall be conducted by at least one individual knowledgeable of the relevant documents and processes; and,

- A review of content to verify compliance with applicable regulations and this QA program and the Radiation Safety Program. This review shall be conducted by

the QA Manager Radioactive Transportation and/or the appropriate Radiation Safety Officer.

At least one reviewer shall be independent of the individuals who authored the document.

4.5.7 Approval of a document shall be indicated by dated signature of the individuals conducting the review on the cover or drawing block of the original.

4.5.8 No procedure, instruction, or drawing shall be distributed or used without valid approval signatures.

4.5.9 Revisions to procedures, instructions, and drawing shall undergo the same review process, by the same individuals, if possible, and if not by individuals employed in the same job function.

Note: In addition to the review required under this section, an independent review of certain procedures by the Radiation Safety Committee may be required under the Radiation Protection Program.

4.6 Document Control

4.6.1 This Quality Assurance Program, its implementing procedures, and other documents within the scope of this program shall be subject to document control to assure that the most current revision of any pertinent document is available at the point of use and that obsolete documents are withdrawn.

4.6.2 These documents shall include, but are not necessarily limited to:

- this program,
- design documents, including: drawings, specifications, and fabrication instructions,
- operating, maintenance, and modification procedures,
- inspection and test procedures,
- all procedures specifically prescribed by this program, and,
- documents related to the disposition of nonconformances.

4.6.3 A documented procedure shall be established and maintained for document control, such that:

- Documents which have not undergone review and approval pursuant to Sec. 4.5 are not distributed for use;
- Each document clearly identifies its revision number and effective date;
- All copies of documents distributed for use are identified by a stamped control number;
- Any "uncontrolled" copies issued for other purposes are clearly marked, "UNCONTROLLED COPY;"
- Obsolete originals and control copies are retrieved from their point of use. Obsolete originals and control copies shall be destroyed or clearly marked "OBSOLETE". (An archive copy is retained in accordance with Sec. 4.17.) For control copies sent off-site, a written communication to the individual or organization to whom they were distributed advising them that the document is obsolete, is no longer valid for use, and should be destroyed or returned, is an appropriate alternative; and,
- A master list of document status including the current revision and effective date and the location of all control copies shall be maintained.

4.6.4 Procurement documents shall be controlled in accordance with Sec. 4.4.

4.7 Control of Purchased Material, Equipment and Services

4.7.1 The procurement process includes the following steps, as applicable:

- Development of a request for quotation in accordance with Sec. 4.4.
- Review and approval of the RFQ
- Identification of prospective vendors, including preliminary assessment of their QA program's compliance with applicable criteria of 10CFR71, Subpart H.
- Distribution of RFQ to prospective vendors
- Preliminary evaluation of quotation
- Selection of vendors for audit and inspection
- Vendor (and sub-vendor) evaluation including as applicable, inspection of the vendor's facility, review of their QA program and applicable procedures, and survey of the vendor's quality related records

- Selection of vendor based on technical merits, conformance to QA requirements, production capability, and past performance
- Resolution of unacceptable conditions
- Preparation of purchase order or contract in accordance with Sec. 4.4
- Review and approval of purchase order or contract in accordance with Sec.4.4
- Pre-award communications to verify procurement requirements are understood
- Issue of purchase order or contract
- Acceptance by vendor
- Post-award verification activities including as applicable: hold and inspection, review of vendor derived test data, inspection of processing, review of documentation
- Report and disposition of nonconformances
- Pre-shipment inspection
- Transmittal of required documents and records
- Shipment and receipt
- Receiving inspection

The inclusion, order, and degree of emphasis placed on any of these steps shall be dependent on the nature of the material, equipment, or service being procured and shall be determined by the QA Manager Radioactive Transportation prior to and during the procurement process.

4.7.2 Vendor Qualification

Materials, equipment, and services shall be purchased only from qualified vendors. Vendors shall be approved by the QA Manager Radioactive Transportation with assistance of QA and technical staff and/or consultants for specific goods and/or services. The qualification process shall be dependent on the nature of the material, equipment, or service being procured and shall be determined by the QA Manager Radioactive Transportation. Vendor qualification shall be made on the basis of:

- the vendor's capability to comply with the applicable QA criteria of 10CFR 71, Subpart H;
- the vendor's technical and/or production capabilities to meet the procurement requirements; and,

- past performance, especially concerning nonconformances and their identification and disposition.

Assessment of vendor qualification shall consider, as appropriate:

- inspection of the vendor's facility
- review of their QA program and applicable procedures
- survey of the vendor's quality related records
- ISO 9001 or 9002 registration (not required, but can be used as one indication of QA compliance).
- review of prior quality history in previous purchases
- use by the original packaging designer or manufacturer (not required, but appropriate weight should be given to vendors of maintenance materials who where qualified by the packaging designer and/or manufacturer when not Neutron.)

For purchased materials for maintenance which are:

- included in the package specification and cannot be changed without a revision to the applicable DOT specification, Certificate of Compliance and/or Certificate of Competent Authority; and,
- purchased to commercial specifications,

vendor qualification need only consider the vendor's capability to supply the required materials in accordance with specified procurement requirements.

4.7.3 Resolution of Unacceptable Conditions

In the event that an otherwise qualified vendor is unable to fully satisfy all procurement requirements, efforts should be made to resolve those unacceptable conditions prior to the award of purchase order or contract; however, where that is not possible, and when the QA Manager Radioactive Transportation judges that resolution can be achieved prior to completion of the service or delivery of goods, then the vendor may be awarded provisional qualification provided that a contractual commitment is agreed upon to reach resolution at a mutually agreeable date or step during the contract.

4.7.4 Vendor Performance Control

The QA Manager Radioactive Transportation shall assure that vendors adequately understand all quality and safety related procurement requirements. Such assurance may be obtained through pre- and/or post-award meetings or other communications. The degree of vendor performance control shall be dependant on the nature of the material, equipment, or service being procured and shall be determined by the QA Manager Radioactive Transportation prior to and during the procurement process.

4.7.5 Verification Activities

The degree to which verification activities will be applied to assure that goods or services conform to procurement requirements shall be dependant on the nature of the material, equipment, or service being procured and shall be determined by the QA Manager Radioactive Transportation with appropriate assistance of QA and technical staff and/or consultants, including, as applicable:

- surveillance by Neutron of fabrication and/or other processes;
- tests and inspections to be conducted by vendor, Neutron, or third parties;
- receipt inspection; and,
- other verification activities.

Verification requirements should be clearly expressed in the appropriate procurement documents. When acceptance of a package component is contingent upon tests conducted after installation, the acceptance documentation shall be mutually established with the vendor of the item prior to its use.

For purchased materials for maintenance which are:

- included in the package specification and cannot be changed without a revision to the applicable DOT specification, Certificate of Compliance and/or Certificate of Competent Authority; and,
- purchased to commercial specifications.

Verification requirements need only include a receiving inspection to verify that:

- goods are identified in accordance with the procurement requirements;
- all certificates of analysis or other records of test and inspection provided by the vendor agree with specifications pursuant to procurement documentation; and,
- goods are undamaged and free from defect, based on visual inspection.

4.7.6 Control of Nonconformance by Vendors

Except for purchases made pursuant to Sec. 4.4.8, vendors shall be required under provisions specified in the appropriate procurement documents to report all nonconformances to the QA Manager Radioactive Transportation or his designee. Reportable nonconformances shall include, but are not limited to:

- failure to comply with any applicable criteria of 10CFR 71, Subpart H, or the vendor's QA program and procedures;
- failure to perform processes in accordance with specified procedures, instructions, or drawings; and,
- test or inspection results which do not meet specified criteria.

The disposition of nonconforming items identified by the vendor (or by Neutron upon receiving inspection), i.e. rework, repair, replacement, or use as is, shall be agreed to in writing by the QA Manager Radioactive Transportation after evaluation of the nonconformance, the vendor's recommendation and its technical justification, and alternatives for disposition and their technical merits.

The disposition for nonconforming goods identified upon receipt pursuant to Sec. 4.8 shall be determined by the QA Manager Radioactive Transportation and may include:

- return to the supplier for replacement;
- purchase from another qualified vendor, or
- a remedy by Neutron, reviewed and approved in accordance with Sec. 4.15.

4.7.7 Records Related to Control of Purchased Goods and Services

In accordance with Sec. 4.4.3, procurement documents shall specify quality records which the vendor shall submit to Neutron. These shall include, but are not limited to:

- records which identify material and/or equipment and the specific procurement requirements, i.e., codes, standards, or specifications, met by the items; and,
- records which identify procurement requirements which have not been met, i.e., nonconformances, and records relevant to their disposition.

Other records which shall be submitted, as applicable, may include:

- records of certification of individuals where such certification is a procurement requirement;

- records of test and inspection results; and,
- records relevant to special processes.

The QA Manager Radioactive Transportation, in accordance with Sec. 4.7.4, shall be responsible for assuring that all records requirements are understood by the vendor.

4.8 Identification and Control of Materials, Parts and Components

4.8.1 During fabrication of packaging or packaging components all materials, parts, sub-assemblies, etc. shall be clearly identified. Identification should include traceability to appropriate documentation, and test and inspection status so as to preclude the use of incorrect, untested, or defective items.

4.8.2 Documented procedures for identification of items pursuant to Sec. 4.8.1, shall be established in accordance with Sec. 4.5, prior to the onset of procurement and fabrication activities.

4.8.3 All packaging, packaging components, and maintenance materials for packaging in current use shall be clearly identified including traceability to appropriate Certificates of Compliance and other applicable documentation.

4.8.4 All nonconforming items shall be clearly identified as nonconforming and be physically segregated in accordance with Secs. 4.15.3-4 to prevent their inadvertent use.

4.8.5 The status of all existing packaging or components which are not available for use because of:

- required maintenance,
- failure to meet required test or inspection criteria,
- expiration or withdrawal of regulatory authority, or
- any other reason

shall be clearly identified so as to prevent inadvertent use.

4.9 Special Processes

4.9.1 A "special process" is herein defined as,

- a process for which the results cannot be fully verified by subsequent inspection and testing of the product and where, for example, processing deficiencies may become apparent only after the product is in use, or,

- a process which is conducted by individuals who require certification in accordance with standards, codes, or regulations.

Examples of special processes included in 10CFR 71, include welding, heat treatment, and non-destructive testing

4.9.2 All special processes shall be conducted in accordance with documented procedures established in accordance with Sec. 4.5. Procedures shall include provisions for:

- establishing qualifications of individuals performing the process, including requirements for certification;

- identification of all applicable codes, standards, and regulations;

- specifying process parameters and tolerances; and,

- records requirements to verify that special processes are conducted in accordance with procedures.

The review and approval of procedures for special processes conducted pursuant to Sec 4.5 shall include a validation by analysis and or testing to assure the process' capability to comply with applicable codes, standards, regulations, and design criteria.

4.9.3 The QA Manager Radioactive Transportation or his designee shall verify the certification of all applicable individuals prior to the conduct of any special process.

4.9.4 The QA Manager Radioactive Transportation or his designee shall review all pertinent quality records for special processes prior to approving items produced by those processes for use.

4.10 Inspection Control

4.10.1. Inspection activities shall be conducted in accordance with documented procedures established in accordance with Sec. 4.5. Such procedures shall include:

- identification of characteristics or activities to be inspected;

- acceptance and/or rejection criteria;

- identification of individuals or groups responsible for performing inspections, including their independence from the activity being inspected as provided for under Sec. 4.1.2;
- qualifications of inspectors;
- records of objective evidence of inspection results;
- identification of hold or witness points;
- review and approval of inspection results by the QA Manager Radioactive Transportation or his designee; and,
- prerequisites to be satisfied prior to inspection, e.g. instrument calibration and inspector qualification.

4.10.2 Where sampling methods are used to verify the acceptance of a larger group of items, the statistical validity of the sampling method and analysis of results shall be documented and submitted for inclusion during the review and approval conducted pursuant to Sec. 4.5

4.10.3 Fabrication Inspections

When Neutron is the primary manufacturer of packaging, i.e., the packaging was fabricated by or for Neutron to designs created by or for Neutron, the documented procedures established pursuant to 4.10.1 shall ensure:

- that all safety-related items supplied by vendors are inspected upon receipt to assure they meet the documented procurement requirements;
- that adequate hold points and inspection of work in-process are established to assure compliance with documented procurement requirements, whether such work is performed at Neutron or at a vendor's facility, such that possible nonconformances are inspected for prior to incorporation into the finished packaging. Where direct inspection of work in-process is not practical, procedures should provide for indirect monitoring of processing methods, equipment, personnel, and records;
- that the final packaging or component is identifiable and traceable to specific records and meets documented procurement requirements;
- that all nonconformances identified during the fabrication process or in prior inspections have been adequately resolved; and,
- that the QA Manager Radioactive Transportation or his designee reviews all inspection records to verify that all requirements have been met.

4.10.4 When packaging is modified or repaired, then it shall be reinspected to the original criteria using the same methodology or appropriate alternatives

4.10.5 Maintenance Inspections

For casks in use, the documented procedures established pursuant to 4.10.1 shall ensure that a program of inspection for each packaging or type of packaging is maintained such that:

- items to be inspected and maintained are identified;
- criteria are established for repair or replacement; and,
- a frequency of inspection is assigned to each item.

Where a maintenance inspection procedure is supplied by the packaging designer, manufacturer, or supplier, then that procedure may be used in lieu of one developed pursuant to Sec. 4.10.1.

Where a maintenance inspection procedure is specified by a Certificate of Compliance, then that procedure shall be used in lieu of one developed pursuant to Sec. 4.10.1.

4.10.6 Pre-shipment inspections

Documented procedures established pursuant to 4.10.1 shall ensure that each package is inspected prior to each shipment to include, as a minimum:

- Verification of proper assembly;
- Shipping papers are properly completed;
- packages are conspicuously and durably marked per DOT regulations; and,
- radiation and contamination levels are in compliance with applicable regulations.

The QA Manager Radioactive Transportation or his designee shall review all pre-shipment inspection results prior to authorizing the shipment.

4.10.7 Records of inspection activities shall be adequate to identify, as a minimum:

- the purpose of the inspection;
- the name of the inspector;
- the date of the inspection;

- the result of the inspection (including indications of "out-of-specification", nonconforming, or other conditions detrimental to quality); and,

- approvals pursuant to 4.10.3.

4.11 Test Control

4.11.1 Test programs, including prototype qualification tests, production tests, proof tests, operational tests, use tests, maintenance tests, and all other tests falling within the scope of this QA program shall be conducted in accordance with documented procedures established in accordance with Sec. 4.5. Such procedures shall include, as applicable:

- measures for instrument calibration
- specification of suitable environmental conditions
- monitoring to be performed
- mandatory hold points
- condition of test equipment
- methods for identification of test specimens
- provisions for recording test data and results
- criteria for acceptance or rejection

4.11.2 Test results shall be reviewed and approved by the QA Manager Radioactive Transportation or his technically qualified designee.

4.11.3 Records of test activities shall be adequate to identify, as a minimum:

- the purpose of the test;
- the identity of the individual conducting the test (and recording the data, if different;)
- the date of the test;
- the test equipment used;
- the result of the test (including indications of "out-of-specification", nonconforming, or other conditions detrimental to quality); and,
- approvals pursuant to 4.11.2.

4.12 Control of Measuring and Test Equipment

4.12.1 Measuring and test instruments used for inspections and tests conducted pursuant to Secs. 4.10 and 4.11, shall be calibrated at specific intervals to assure sufficient accuracy for the use intended.

4.12.2 Calibration methods and frequencies shall be specified either directly, or by reference to applicable equipment instruction manuals, by inspection and test procedures established pursuant to Secs. 4.10 and 4.11, or in stand-alone procedures established in accordance with Sec.4.5.

4.12.3 Calibration procedures should also specify:

- the necessary qualifications of individuals conducting the calibrations;
- the calibration standards to be used;
- criteria for accuracy, i.e., when is an instrument considered "out-of-calibration"; and,
- provisions for recording calibration data including: the identity of the individual conducting the test, the calibration date, identification of calibration standards, and standard measurement data.

4.12.4 The calibration status of all measuring and test equipment used under this program shall be clearly indicated by a label or tag indicating the last date of calibration, the initials of the individual who conducted the last calibration, and the recalibration due date.

4.12.5 Calibration standards shall be traceable to the National Institute for Standards and Technology or another appropriate standards setting body. If no recognized standard exists, than the basis for the calibration should be documented.

4.12.6 The frequency of calibration shall be based on the instrument's tendency to drift and other appropriate factors to minimize the likelihood that the instrument will go out of calibration before the next calibration due date.

4.12.7 Instruments which are consistently or frequently out of calibration shall be repaired or replaced.

4.12.8 Instruments which cannot be properly calibrated in accordance with applicable procedure shall be removed from service, and repaired or disposed of. The status of instruments awaiting repair should be clearly indicated by a label which includes a "DO NOT USE" warning.

4.12.9 When an instrument is found to be out of calibration, the QA Manager Radioactive Transportation shall initiate measures to validate previous inspection and test results back to the last calibration. When previous results cannot be validated or are shown to be out of specification, this shall be considered a nonconformance in accordance with Secs. 4.15 and 4.16.

4.13 Handling, Storage and Shipping

4.13.1 Documented procedures shall be established in accordance with Sec. 4.5 for handling, storage, and shipment of packages. These procedures shall, as a minimum:

- specify special handling and lifting equipment used to move the package;
- specify special handling and/or storage provisions for packaging;
- specify environmental conditions for storage required to prevent deterioration of packaging; and,
- adhere to all conditions identified in the specific Certificate of Compliance for loading and unloading of packages.

4.13.2 Procedures for use and/or shipment shall require provisions for:

- assuring that all conditions, including specified operations, inspections, and tests have been completed prior to delivery of a package to a carrier (including Neutron);
- assuring that all applicable regulatory requirements, including: contamination and radiation limits, are satisfied; and,
- assuring that all necessary shipping papers have been properly completed,

such as review and approval of inspection and test records, and shipping papers by the QA Manager Radioactive Transportation or his designee.

4.14 Inspection, Test, and Operating Status

4.14.1 Documented procedures shall be established in accordance with Sec. 4.5 and pursuant to Sec. 4.8 to assure that the status of inspections, tests, and operational conditions for all packages, packaging, components, sub-assemblies, materials, and other quality related items during and subsequent to fabrication is clearly communicated to all appropriate individuals.

4.14.2 Such procedures shall require the use of tags, markings, stamps, labels, or the equivalent to assure that quality related items have not bypassed the required inspections and tests.

4.14.3 The status of nonconforming, inoperative, or malfunctioning packages or components shall be clearly identified to prevent inadvertent use.

4.15 Control of Nonconformances

4.15.1 Documented procedures shall be established in accordance with Sec. 4.5 for the identification and control of nonconforming materials, parts, components, and services in accordance with the requirements of this section.

4.15.2 A nonconformance is:

- any safety or quality related item or service which fails to satisfy design, test, inspection, or operating criteria;
- any safety or quality related item which was not produced to, or any service or operation which was not conducted in accordance with, applicable procedures, drawings and/or instructions;
- any safety or quality related item which has not been maintained, handled, or stored in accordance with applicable procedures, drawings and/or instructions;
- any safety or quality related item, service, or operation which otherwise fails to comply with any element of this QA program; or,
- any safety or quality related item which is damaged or is otherwise recognized as defective.

4.15.3 All nonconforming items shall be clearly labeled, tagged, or otherwise identified as nonconforming in accordance with Sec. 4.14.3 so as to prevent their inadvertent use while awaiting disposition.

4.15.4 Nonconforming items shall be physically segregated in controlled hold areas separate from the storage area for similar conforming items so as to prevent their inadvertent use while awaiting disposition.

4.15.5 The QA Manager Radioactive Transportation or his technically qualified designee shall investigate all nonconformances so as to determine their causes. The investigation and its conclusions shall be documented. This investigation should include a determination as to whether corrective action pursuant with Sec. 4.16 is required.

4.15.6 The QA Manager Radioactive Transportation with assistance of QA and technical staff and/or consultants shall evaluate the circumstances of each nonconformance and approve a course of action for disposition which may include: rework, repair, use as is, or scrap and replace. The technical justification for the approved disposition shall be documented.

4.15.7 A written record of each nonconformance (Nonconformance Report) shall be made. The report shall include as a minimum:

- identification and description of the nonconformance including all materials, packaging, components, parts, or other items affected;
- the cause of the nonconformance (a report generated pursuant to Sec. 4.15.5 may be referenced;)
- the approved disposition of the nonconformance and its technical justification;
- a description of relevant corrective actions;
- a certification where appropriate that the nonconforming items were retested and reinspected after rework or repair in accordance with relevant criteria; and,
- an approval signature of the QA Manager Radioactive Transportation.

4.15.8 Nonconformance reports shall be periodically analyzed by the QA Manager Radioactive Transportation pursuant to the audit requirements of Sec. 4.18 to determine quality trends for management review and assessment.

4.16 Corrective Action

4.16.1 The QA Manager Radioactive Transportation, or his designee, shall conduct an evaluation, in conjunction with the appropriate line manager and technical staff, of any conditions determined to be adverse to quality, such as, nonconformances, failures, malfunctions, deficiencies, deviations, defective materials or equipment, or inadequate implementation of any element of this QA program, to determine the need for corrective action, if any.

4.16.2 The evaluation, its conclusions, and recommendations including the course of action and required completion dates shall be documented in the form of a Corrective Action Report which shall be reviewed and approved by the QA Manager Radioactive Transportation as indicated by his signature.

4.16.3 The QA Manager Radioactive Transportation, or his designee, shall conduct a "close-out" evaluation of all corrective actions undertaken to verify that the corrective actions were implemented and that they were effective.

4.16.4 The close-out evaluation shall be documented and appended to the Corrective Action Report

4.16.5 Significant Conditions Adverse to Safety/Quality and Substantial Safety Hazards

A significant condition adverse to safety/quality is defined as a condition where the failure, malfunction, defect, damage, loss of effective shielding, reduction in heat transfer or other situation involving any packaging (including involvement in a transportation accident) which leads to or has reasonable potential to cause:

- death or injury;
- loss of source containment;
- damage to or deterioration of a source; or,
- inability to load, unload, or otherwise use the packaging in accordance with applicable procedures.

A substantial safety hazard is a loss of safety function to the extent that there is a major reduction in the degree of protection provided to the public health and safety, per 10CFR21.

All Neutron Products employees and contractors have the responsibility to promptly report any significant condition adverse to safety/quality to:

- Neutron's President;
- the QA Manager Radioactive Transportation; and,
- the RSOs for the "01" and "03" licenses.

In the event of a significant condition adverse to safety/quality or a substantial safety hazard:

- necessary measures shall be taken in accordance with Neutrons' *Emergency Contingency Plan* (on-site) and/or *Emergency Procedures During Shipping of Radioactive Materials* (off-site) to stabilize emerging conditions and to minimize harm to workers, the public, and the environment;
- appropriate regulatory and emergency response agencies shall be contacted; and,
- operations (other than emergency measures) involving the affected packaging shall be halted pending the outcome of the investigation of nonconformance per Sec. 4.15, including whatever corrective action is deemed necessary or desirable.

4.17 Quality Assurance Records

4.17.1 Quality assurance records furnish documentary evidence that activities conducted under this program and affecting quality were performed in accordance with the requirements of the program. Records are essential to demonstrate compliance with 10CFR 71, Subpart H, and other applicable regulations. Records form the basis for internal and external audits and inspections. Moreover, records are often necessary for conducting many other operations which fall within the scope of this program. Accordingly:

4.17.1.1 All records generated under this program or its implementing procedures shall be legible and identifiable.

4.17.1.2 Records shall be stored and maintained in such a way that they are retrievable and that minimizes the possibility of deterioration, damage, or loss including from fire, flood, temperature, light exposure, humidity, or infestation.

4.17.1.3 Records shall be completed to reflect the work accomplished and should be processed without undue delay to assure accuracy and availability.

4.17.2 Records shall be classified as "lifetime" or "nonpermanent".

4.17.2.1 Lifetime records as listed in Section 4.17.3 relate to the fabrication of packaging, or to those of a particular item while it is installed in packaging or stored for future use, that demonstrate the capability for safe operation; provide evidence of repair, rework, replacement, or modification; might be anticipated to aid in determining the cause of an accident of an item; or provide a baseline for in-service inspections. Lifetime records shall be retained for a period of not less than three years after the packaging or item to which they relate is no longer in use.

4.17.2.2 Nonpermanent records as listed in Section 4.17.4 relate to use of a package and show evidence that an activity was performed. Nonpermanent records shall be maintained for a period of not less than three years after the shipment to which they relate or as required by applicable regulation whichever is longer.

4.17.3 Lifetime documents and records shall include, but are not necessarily limited to:

- This QA program;
- Procedures established pursuant to this program;
- Archival copies of previous program and procedure revisions;

- Records related to personnel qualification, including training, retraining, and certification records to show compliance with the applicable requirements of Secs. 4.1 and 4.9;

- Design records generated pursuant to Sec 4.3 (i.e., design input criteria, design verification records, drawings, specifications, instructions, and prototype evaluations;)

- Procurement records generated pursuant to Sec 4.4 (i.e., purchase orders, requests for quotation, and contracts;)

- Records pertaining to control of purchased material, equipment and services generated pursuant to Sec.4.7 (i.e., records of vendor inspections and audits, records submitted by the vendor as required, records related to vendor nonconformance, minutes of quality related meetings, etc.;)

- Records related to the validation of special processes generated pursuant to Sec. 4.9;

- Records of inspections and tests generated pursuant to Secs. 4.10 and 4.11 pertaining to fabrication, installation, repair, modification of packaging or components;

- Test control records generated pursuant to Sec.4.12 (i.e., certificates of standard traceability, calibration records, out-of-calibration verifications;)

- Nonconformance records generated pursuant to Sec. 4.15 (i.e., nonconformance reports, nonconformance investigation reports, disposition evaluations and approvals, records pertaining to re-inspections and retests;)

- Corrective action records generated pursuant to Sec. 4.16 (i.e. corrective action and close-out reports;)

- Audit records generated pursuant to Sec. 4.18;

- NRC Certificates of Compliance; and,

- DOT Certificates of Competent Authority.

4.17.4 Nonpermanent records shall include, but are not necessarily limited to:

- shipping papers;

- records pertaining to contamination and radiation surveys; and,

- records pertaining to pre-shipment inspections generated pursuant to Sec. 4.10.6.

4.17.5 As a minimum, copies of records shall be stored at locations accessible to individuals requiring access to them.

4.17.6 The QA Manager Radioactive Transportation shall establish the storage location for copies of records used for QA purposes and shall maintain a list of record locations.

4.17.7 QA records shall not be removed from their storage location unless a signed memorandum is submitted to the records clerk describing where the record will be used, by whom, for what purpose, and when it will be returned. (Copying records is acceptable and in most cases preferable)

4.17.8 When records are stored electronically, a documented procedure established in accordance with Sec. 4.5 shall be established and implemented to assure back-up copies are routinely produced and updated.

4.18 Audits

4.18.1 Audits being essentially a sampling process, the level of audits of the Quality Assurance Program shall be dependent on the safety significance of the activity being audited including past performance.

4.18.2 The QA Manager Radioactive Transportation shall develop a list of activities important to safety to be audited.

4.18.3 Audits shall be planned and should include both a compliance and implementation phase. The compliance phase is used to verify that the audited organization has a documented QA program and procedures which are compliant with 10CFR 71, Subpart H. The implementation phase includes monitoring of operations and activities and reviewing a sampling of pertinent records to verify that the QA program is adequately implemented and functioning as intended.

4.18.4 Internal Audits

4.18.4.1 The QA Manager Radioactive Transportation shall designate a lead auditor for internal audits conducted pursuant to this section, who shall be responsible for planning, scheduling, team selection, conduct, pre- and post-audit conferences and reporting.

4.18.4.2 Audit team members shall be drawn from staff or consultants who are knowledgeable in the conduct of quality audits and familiar with the activities being audited, the scope of their responsibilities shall be such that they are independent from the activities they audit. Consultants shall be evaluated and approved as a Vendor in accordance with Sec. 4.7.2.

4.18.4.3 Internal audits shall be conducted no less often than every calender year. Areas of major nonconformance should be re-audited within six months.

4.18.4.4 The scope of the audit(s) conducted shall be sufficient to determine compliance and implementation of each of the eighteen elements of this QA program. Emphasis should be placed on areas of past and current nonconformances and corrective actions.

4.18.4.5 Nonconformances revealed during internal audits and related corrective actions shall be reported, evaluated, approved, and recorded in accordance with Secs. 4.15 and 4.16.

4.18.4.6 A pre-audit conference(s) shall be conducted with each line manager with responsibility for activities being audited. The conference should confirm the audit scope and schedule, inform managers of required resources including personnel to be interviewed, processes to be inspected, and records and documents to be reviewed. A mutually acceptable audit agenda should be defined.

4.18.4.7 A post-audit conference between the audit team and line and executive management shall be conducted to present findings including nonconformances and to resolve misunderstandings.

4.18.4.8 A written audit report shall be prepared within 30 days of the post-audit conference. The report shall include documentation of findings including nonconformances. Audit reports shall be addressed to the President and distributed to all line managers responsible for the activities audited.

4.18.5 Vendor Qualification Audits

4.18.5.1 Pursuant to Sec. 4.7.2, vendors of products or services that are classified in Appendix A of NRC Regulatory Guide 7.10 as:

- Category A, that is, items (or services related to items) which are critical for safety and for which failure or malfunction could result in a condition adversely affecting safety, or,
- Category B, that is, items (or services related to items) which have a major impact on safety, but for which failure or malfunction could result in a condition adversely affecting safety only in conjunction with a secondary event, other failure, or adverse environmental condition,

shall be audited prior to the award of contract or purchase order, unless they have been audited by Neutron within the previous three years, to verify that items produced or services performed comply with the appropriate QA program. For suppliers of packaging this program shall have current NRC approval.

In addition, whenever such a contract or purchase order to an individual vendor spans a period of three (3) years or more, or for vendors who are long term

suppliers, audits shall be performed in accordance with the requirements of this section at least once every three years.

4.18.5.2 The QA Manager Radioactive Transportation shall serve as or designate a lead auditor for vendor qualification audits conducted pursuant to this section who shall be responsible for planning, scheduling, team selection, conduct, pre- and post-audit conferences and reporting.

4.18.5.3 Audit team members shall be drawn from staff or consultants who are knowledgeable in the conduct of quality audits and familiar with the activities being audited. The scope of their responsibilities shall be such that they are independent from the activities they audit.

4.18.5.4 The scope of the audit(s) conducted shall be sufficient to determine compliance and implementation of each of the applicable elements of 10CFR 71, Subpart H, and this QA program. Emphasis should be placed on areas of past and current nonconformances and corrective actions.

4.18.5.5 Nonconformances revealed during vendor audits and related corrective actions shall be reported, evaluated, approved, and recorded in accordance with agreed upon provisions as specified in procurement documents.

4.18.5.6 A pre-audit conference(s) shall be conducted with management with responsibility for activities being audited. The conference should confirm the audit scope and schedule, inform managers of required resources including personnel to be interviewed, processes to be inspected, and records and documents to be reviewed. A mutually acceptable audit agenda should be defined and a time for the post-audit conference should be scheduled.

4.18.5.7 A post-audit conference between the audit team and vendor management shall be conducted to present findings including nonconformances and to resolve misunderstandings.

4.18.5.8 A written audit report shall be prepared within 30 days of the post-audit conference. The report shall be reviewed and approved by the QA Manager Radioactive Transportation and include documentation of findings including nonconformances. Audit reports shall be addressed to the QA management of the audited organization for distribution to all managers responsible for the activities audited. Copies of the audit report should be distributed to Neutron's President and to other management with responsibility for goods or services supplied by the audited vendor. The written audit report should require a response from the audited organization which shall include scheduled dates for initiation and completion of required corrective actions. The QA Manager Radioactive Transportation shall verify that the response is adequate and that corrective actions are accomplished within the prescribed schedule.

5. CHANGE RECORD

5.1 Revision 9

Sec. 2

Renumbered.

Sec. 4.1.3

Added.

Sec. 4.1.5.2 (and multiple references)

The title of the QA Manager for Division III (Division III QA Manager) has been changed to the QA Manager Radioactive Transportation.

Sec. 4.1.5.4

"Teletherapy sources" changed to "radioactive sources."
"Permanent sites" changed to "Dickerson facility."

Sec. 4.1.5.5

"Temporary job sites" changed to "sites other than the Dickerson facility."

Sec. 5

Change Record added.

5.2 Revision 10

Table of Contents

Added "Sec, 4.2 Quality Assurance Program"

Sec. 4.1.2 Assignment of QA/QC responsibilities

Added

Sec. 4.1.4

Changed "Vice President" to "Executive Management" in last bullet since Neutron no longer has a Vice President.

Sec. 4.1.5.1 Qualifications, Responsibilities, and Authority of the President

A fourth bullet was added to include the President's responsibilities regarding 10CFR21.

Sec. 4.1.5.2 The QA Manager Radioactive Transportation

Two primary bullets and six sub-bullets were added after the 3rd bullet in the 2nd paragraph to specify training responsibilities.

Sec. 4.1.5.3 The Radiation Safety Officer for By-Product Materials License MD-31-025-01 (RSO-Facility) and MD-31-025-03 (RSO-03)

Expanded to include the RSO-03
Expanded to include Certificates of Competent Authority in 3rd bullet of the 1st paragraph.

Sec. 4.1.5.5
New last bullet added for providing training schedule to records clerk.

Sec, 4.1.5.8

Two new bullets added at the end for maintaining Corporate Calender and HAZMAT records.

Sec. 4.2.4

"bases" corrected to "basis."

Sec. 4.4.10

New section to add legends to purchase orders.

Sec. 4.7.2

"bases" corrected to "basis."

Sec. 4.16.5

Expanded to include substantial safety hazards. Per 10CFR21.

Sec. 4.18.4.2

Added that consultants shall be evaluated and approved as a Vendors.

Sec. 4.18.5.5 through 4.18.5.9

Numbering corrected to 4.18.5.4 through 4.18.5.8.

Sec. 4.10.1

Corrected reference in 3rd bullet to 4.1.2.

Sec. 5. Change record: Sec. 4.5.1.4

Corrected Reference to Sec. 4.1.5.2. and 4.1.5.4*; and*

Sec. 5. Change Record: Sec. 4.5.1.5

Corrected reference to 4.1.5.5.

5.3 Revision 11

Sec. 4.1.2.1 and 4.1.2.2

Clarified QA/QC responsibilities to assure independence with line functions.

Sec. 4.1.5.2

Removed incorrect references in 10CFR71 in 1st paragraph
Changed "Plan" to "Program" in 2nd sub-bullet of 2nd paragraph
Clarified which employees are trained in bullets 6 and 7 in 2nd paragraph

Sec. 4.1.5.5

Changed "teletherapy" to "radioactive" in 1st bullet for consistency with Sec 4.1.5.3, 2nd bullet in 2nd paragraph
Removed 5th bullet, responsibility is now under QAMRT

Sec. 4.1.5.6

Changed title from "Packaging Maintenance Supervisors" to "Manager, Radioactive Shipping Packages"

Sec. 4.1.5.8

Added Division III to Records Clerk title
Changed retention time for HAZMAT training records

Section 4.1.5.9

Added Document Control Coordinator (Div. III)
Moved Quality Control Personnel to Section 4.1.5.10

Section 4.1.5.10

Corrected wording in 2nd and 3rd paragraphs to clarify independence of line and QA/QC functions

Sec. 4.1.8

Organization chart revised to reflect title changes and to separate QA/QC and line functions
Document Control Coordinator (Div. III) added to organization chart

Sec. 4.3.2.1

Removed wording from 2nd sub-bullet to clarify independence of QA/QC and line functions

Sec. 4.4.1

Removed 2nd sentence allowing oral purchase orders

Sec. 4.10.1

Removed "except" from 3rd bullet of 1st paragraph to clarify independence of QA/QC and line functions

Sec. 4.17.2.1

Changed wording to clarify retention time

Sec. 4.17.2.2

Changed retention time to 3 years