INTEGRATED INFORMATION RESOURCE NETWORK

e48339

SURVEILLANCE PERFORMANCE FORM

START: 1/2/2006 **SCHEDULING PERIOD :** 4 W

CRITICAL: 1/12/2006 17:00 **PREVIOUS COMPLETE:** 12/4/2005

JOB ID: 0251060102 **TASK ID:** PERFORM 24.202.03 HPCI SYSTEM PIPING FILLED AND VALVE VERIFICATION

WG : 08 **SYSTIE :** E4100

REQUIRED MODE: 1 2 3 **RECOMMENDED MODES :** 1 2 3

RAD PROTECTION REVIEW

SPECIFIC RWP REQUIRED : Y **SPECIFIC RWP NUMBER:** _____

ALARA REVIEW : N

RP REVIEWER : _____ **ID :** _____ **DATE :** _____

JOB START

PROTECTION REQUIRED N

PMT FOR WR# (S) : _____ **LCO# (S) :** _____

LEAD PERSON : _____ **ID :** _____ **DATE:** _____

FSS : _____ **ID :** _____ **DATE :** _____

SF : _____ **ID :** _____ **DATE/TIME :** _____

LEAD PERSON REVIEW

DISCREPANCIES / RESOLUTIONS LISTED? [ ] YES [ ] NO **NO. OF PERSONNEL** _____ **WORK HOURS TO COMPLETE JOB :** _____

TOTAL DOSE RECEIVED_____mrem

JOB COMPLETE : _____ **ID :** _____ **DATE / TIME :** _____

SM REVIEW

_____ **: ALL JOB ACCEPTANCE CRITERIA MET**

_____ **: A PORTION OF JOB ACCEPTANCE CRITERIA MET - EXPLAIN**

_____ **: JOB ACCEPTANCE CRITERIA NOT MET EXPLAIN**

SM _____ **ID :** _____ **DATE :** _____

DESIGNATED REVIEWERS

ISI REVIEWER	**ISI DESIGNATE**	**ID :**	**ISI**	**REQUIRED**	N	**DATE :**	_____
REVIEWER 1 :	STEHULAK , EDWARD	**ID :**	52128	**REQUIRED**	N	**DATE :**	_____
REVIEWER 2 :		**ID :**		**REQUIRED**	N	**DATE :**	_____

JOB INSTRUCTIONS

PERFORM ENTIRE PROCEDURE

Job Position SRO / RO	No. 08-A-001	Revision 0
JPM Title Perform 24.202.03, "HPCI System Piping Filled and Valve Position Verification" (**BANK**)	Duration 20 minutes	Page COVER SHEET

Examinee: _____ SRO / RO / NO / STA

Evaluator: _____

JPM Type: **Normal** / Alternate Path **/** Time Critical

Evaluation Method: **Perform** / Walkthrough / Discuss

(Circle method used) Plant / **Simulator** / Classroom

Start Time _____

Stop Time _____

Total Time: _____

PERFORMANCE EVALUATION SUMMARY							
Element	S	U	Comments	Element	S	U	Comments
1.							
2.							
3.							
4.							
*** 5.**							
6.							
*** 7.**							

_____ SATISFACTORY _____ UNSATISFACTORY

OVERALL EVALUATOR COMMENTS:

Evaluator Signature / Date: _____ / _____

JPM Title Perform 24.202.03, "HPCI System Piping Filled and Valve Position Verification" (BANK)	No.: 08-A-001 Revision: 0 Page 1

Preferred Evaluation Method:

Perform ___X___ Walkthrough _____ Discuss _____

Plant _____ Simulator ___X___ Classroom _____

System:

E4100 – High Pressure Coolant Injection System

Task:

References: Required (R) / Available (A)

24.202.03, " HPCI System Piping Filled And Valve Position Verification" (R)

Tools and Equipment Required:

Surveillance Performance Form (SPF) signed on to reflect job started.

Initial Conditions:

- You are the Control Room NSO.
- The plant is operating at 100% CTP.

Initiating Cue(s):

- You are to perform 24.202.03, "HPCI System Piping Filled And Valve Position Verification", Section 5.1 (Control Room Portion).
- All prerequisites are met.
- Steps 4.1 and 4.2 are complete and signed.

Note: Examinee may identify out-of-position valves prior to reaching procedural steps requiring verification. If necessary, Examiner may cue trainee at any point that, as CRS, you have directed another operator to initiate corrective actions for the condition, and direct Examinee to complete the surveillance.

Terminating Cue(s):

Surveillance 24.202.03, " HPCI System Piping Filled And Valve Position Verification", Section 5.1 is complete.

Task Standard:

Perform 24.202.03, " HPCI System Piping Filled And Valve Position Verification", Section 5.1 (Control Room Portion).

JPM Title	No.: 08-A-001
Perform 24.202.03, "HPCI System Piping Filled and Valve Position Verification" (BANK)	Revision: 0 Page 2

Licensed Operator Exam Information (required for NRC exams)

Safety Function:

2 – Reactor Water Inventory Control

K/A Reference: (from NUREG 1123)

K/A SYSTEM: 206000 - High Pressure Coolant Injection System

K/A STATEMENT:

2.2 Equipment Control

2.2.12 Knowledge of surveillance procedures .....3.0 / 3.4

Maintenance Rule Safety Classification:

E4100-01

Maintenance Rule Risk Significant? (Yes or No)

Yes

JPM Title Perform 24.202.03, "HPCI System Piping Filled and Valve Position Verification" (BANK)	No.: 08-A-001 Revision: 0 Page 3

PERFORMANCE EVALUATION

Start Time _____

ELEMENT	STANDARD
PREREQUSITES: None	
CUE: Provide Examinee with CUE SHEET. Hand Examinee a CONTROLLED copy of 24.202.03, HPCI SYSTEM PIPING FILLED AND VALVE POSITION VERIFICATION with a signed SPF.	
NOTE: Examinee should verify SPF is signed on properly and procedure is controlled.	
1. Place or verify E41-K615, HPCI Pump Flow Controller, in Auto and set at 5250 gpm ("S" Display).	1. Controller is verified in Auto at 5250 gpm. Initial block is signed.
2. Verify horizontal output bar graph on E41-K615, HPCI Pump Flow Controller, is at 100%.	2. Controller is verified at 100%. Initial block is signed.
3. If Annunciator 2D56, HPCI STEAM SUPPLY PRESSURE LOW, is clear, verify: • E4150-F002, HPCI Stm Sply Inbd Iso Vlv, OPEN • E4150-F600, HPCI Stm Sply Otbd Iso Byp Vlv, OPEN	3. 2D56 is verified clear, and E4150-F002 and E4150-F600 are verified OPEN. Initial block is signed.
4. If Annunciator 2D56, HPCI STEAM SUPPLY PRESSURE LOW, is in alarm, verify: • E4150-F002, HPCI Stm Sply Inbd Iso Vlv, CLOSED • E4150-F600, HPCI Stm Sply Otbd Iso Byp Vlv, CLOSED	4. 2D56 is verified Not in alarm. “N/A” is placed in Initial block.

JPM Title Perform 24.202.03, "HPCI System Piping Filled and Valve Position Verification" (BANK)	No.: 08-A-001 Revision: 0 Page 4

ELEMENT	STANDARD
* 5. Verify: • E4150-F003, HPCI Stm Sply Otbd Iso Vlv, CLOSED • E41-F011, HPCI/RCIC Test Iso/Press Control Valve, CLOSED • E41-F011, HPCI/RCIC Test Iso/Press Control Valve, Selector switch in ISOLATE • E4100-F068, HPCI Turb Stm Control Vlv, CLOSED • E4100-F067, HPCI Turb Stm Stop Vlv, CLOSED • E4150-F001, HPCI Turb Stm Sply Iso Vlv, CLOSED • E4150-F004, HPCI CST Suct Iso Vlv, OPEN • E4150-F007, HPCI Pump Disch Otbd Iso Vlv, OPEN • E4150-F006, HPCI Pump Disch Inbd Iso Vlv, CLOSED • E4150-F042, HPCI Torus Suct Inbd Iso Vlv, CLOSED • E4150-F041, HPCI Torus Suct Otbd Iso Vlv, CLOSED • E4150-F021, HPCI Turb Stop Ck Vlv, OPEN • E4150-F012, HPCI Pump Min Flow Vlv, CLOSED • E4150-F059, HPCI Oil Clr Clg Water Iso Vlv, CLOSED • E4150-F022, HPCI Turb Exh Pot Drain Stop Check Vlv, OPEN	* 5. Examinee identifies mispositioned valves. Step 5.1.5 is not met and should **NOT** be signed. CRS must be notified of failure of the following valves to meet Acceptance Criteria: • E4150-F004, HPCI CST Suct Iso Vlv, is CLOSED. • E4150-F042, HPCI Torus Suct Inbd Iso Vlv, is OPEN. • E4150-F041, HPCI Torus Suct Otbd Iso Vlv, is OPEN. Examinee **may** note failed Acceptance Criteria on back of SPF.
CUE: Inform Examinee that a CARD will be written, and direct him/her to complete the remainder of Section 5.1. Do not repostion any valves. Another Operator will realign HPCI Suction per SOP 23.202. Require operator to complete surveillance close-out.	
NOTE: Examinee should continue on and properly document discrepancies.	
6. Verify: • E4150-F008, HPCI Test Line Iso Vlv, CLOSED • E4150-F075, HPCI Exh Vac Bkr Otbd Iso Vlv, OPEN • E4150-F079, HPCI Exh Vac Bkr Inbd Iso Vlv, OPEN	6. Valves are verified in proper positions and initial block is signed.
* 7. Sign Performer block.	* 7. Performer block signed.
CUE: End JPM when Performed block is signed.	

_____ SATISFACTORY _____ UNSATISFACTORY

Stop Time _____ *** Critical Step**

JPM Title	No.: 08-A-001
Perform 24.202.03, "HPCI System Piping Filled and Valve Position Verification" (BANK)	Revision: 0 Page 6

Evaluator Notes:

This JPM should be performed in the simulator control room.

ENSURE ALL INDUSTRIAL AND PERSONNEL SAFETY PRACTICES ARE USED AND ENFORCED AT ALL TIMES.

Generic Notes and Cues:

CMC switches will turn RED and amperage will increase when the switch is rotated to the start position started. The current should initially be five to seven times the normal running amps with the ammeter flashing. As counter EMF is developed, the amperage will lower to the normal running amperage and the ammeter will no longer flash. CMC switches will turn GREEN when the pumps are stopped and amperage will decrease to zero.

Ex.: Pump start: "Switch has been rotated to the start position, red light is lit, green light is out, amperage initially pegs out high, and is now indicating __X__ amps."

Pump stop: "Switch has been rotated to the stop position, green light is lit, red light is out, amperage indicates 0 amps."

Remotely operated valve position is determined with open and close indicating lights. A RED light only would indicate that the valve is open. A GREEN light only would indicate that the valve is closed. Dual indication would indicate that the valve is in some intermediate position.

Manual valves are checked in the closed direction (MOP02 and MOP05). Valve stem position may aid in valve position determination, but cannot be used as Independent Verification (MOP02).

Ex.: Verify valve closed: "Valve handwheel indicates no valve movement in the clockwise direction."

Verify valve open: "Valve handwheel has been rotated slightly in the clockwise direction and returned to the original positions."

Closing a valve: "Valve handwheel has been rotated in the fully clockwise direction until no additional valve movement. Valve stem is down."

Opening a valve: "Valve handwheel has been rotated in the fully counterclockwise direction until no additional valve movement, valve stem is out."

Controllers have an Auto light that is GREEN when selected and AMBER (YELLOW) when Manual is selected. When in Manual, the open and closed pushbuttons control the parameter to be changed by adjusting position or speed. When the deviation meter is nulled, then the process can be shifted to Auto to allow the desired setpoint to control the process.

System Specific Notes and Cues:

None

Task Performance and Cues:

The Elements of this JPM are step by step in accordance with the procedure. The Standard is that the procedure is performed as written. The Cues are as listed above for indication or as each step is completed the appropriate information is reported to the examinee. Notify Examinee that time compression may be used for activities performed outside of the Control Room.

Critical Steps:

Critical Tasks are identified by asterisk (*) and **bolded** steps on the cover sheet. Verify that the latest revision of the procedure is used and critical tasks are correctly identified.

FOLLOW-UP DOCUMENTATION QUESTIONS

Reason for follow-up question(s):

Question:

Reference:

Response:

Question:

Reference

Response:

Simulator Setup

IC#:

Any power IC

Malfunctions:

Number	Title	Value	Delay	Ramp
None				

Remote Functions:

Number	Title	Value	Delay	Ramp
None				

Override Functions:

Number	Title	Value	Delay	Ramp
None				

Special Instructions:

1. Align HPCI Suction valves to CST.
   - E4150-F004, HPCI CST Suct Iso Vlv, CLOSED.
   - E4150-F042, HPCI Torus Suct Inbd Iso Vlv, OPEN.
   - E4150-F041, HPCI Torus Suct Otbd Iso Vlv, OPEN.

2. Surveillance Performance Form (SPF) as part of initial Cue.

Initial Conditions:

- You are the CRNSO.
- The plant is operating at 100% CTP.

Initiating Cue(s):

- You are to perform 24.202.03, “HPCI System Piping Filled And Valve Position Verification”, Section 5.1 (Control Room Portion).
- All prerequisites are met.
- Steps 4.1 and 4.2 are complete and signed.

			FERMI CYCLE 11		SEQUENCE NO 11
CORE PARAMETERS			3DM/P11		TODAY 09:00 CALCULATED
POWER	MWT	3430.	PERIODIC LOG		TODAY 09:01 PRINTED
POWER	MWE	1134.	AUTOMATIC		CASE ID FMLD1050609105759
FLOW	MLB/HR	92.266	CALC RESULTS		RESTART FMLD1050609095759
FPADPR		0.905			LPRM SHAPE – FULL CORE
SUBC	BTU/LB	21.97	Keff	1.0026	
PR	PSIa	1040.78	XE WORTH %	-2.33	LOAD LINE SUMMARY
CORE	MWD/sT	23998.7	XE/RATED	1.02	CORE POWER 100.0%
CYCLE	MWD/sT	3997.3	AVE VF	0.469	CORE FLOW 92.3%
MCPR		1.628			LOAD LINE 104.9%

CORRECTION FACTOR: MFLCPR= 1.000 MFLPD= 1.000 MAPRAT= 1.000
OPTIONS: ARTS 2 LOOPS ON MANUAL FLOW MCPRLIM= 1.350

MOST LIMITING LOCATIONS (NON-SYMMETRIC)

MFLCPR	LOC	MFLPD	LOC	MAPRAT	LOC	PCRAT	LOC
0.829	29-10	0.985	51-34- 4	1.008	51-34- 4	1.011	9-42- 5
0.826	9-30	0.975	33-10- 5	0.975	33-10- 5	1.006	9-34- 5
0.814	29-14	0.955	51-32- 4	0.925	51-20- 5	1.006	13-42- 5
0.812	13-30	0.867	51-20- 5	0.900	41-10- 5	1.006	11-40- 5
0.805	27-12	0.862	53-32- 5	0.747	51-32- 4	1.005	7-32- 5
0.803	11-28	0.861	41-10- 5	0.747	37-10- 5	1.005	27-52- 3
0.796	27-10	0.861	31-10- 5	0.743	51-24- 5	1.004	7-40- 5
0.790	9-28	0.854	53-34- 4	0.742	53-30- 5	1.004	13-32- 4
0.786	25-10	0.854	37-10- 5	0.734	31- 8- 5	1.003	19- 5- 4
0.785	9-26	0.849	51-24- 5	0.727	47-20- 5	1.003	23-52- 4

SEQ. A002 C=MFLCPR D=MFLPD M=MAPRAT P=PCRAT *=MULTIPLE

																CORE AVE AXIAL NOTCH	REL PW	LOC
																	0.110	25
																00	0.244	24
																02	0.582	23
L																04	0.780	22
55																06	0.835	21
51																08	0.902	20
L																10	0.927	19
47					06				06							12	0.934	18
43		P														14	0.953	17
L																16	1.015	16
39				06				10				06				18	1.049	15
35																20	1.103	14
L														*		22	1.152	13
31					10				10					M		24	1.190	12
27																26	1.203	11
L																28	1.219	10
23				06				10				06				30	1.269	09
19																32	1.312	08
L																34	1.335	07
15					06				06							36	1.405	06
11								C								38	1.449	05
L																40	1.382	04
07																42	1.280	03
03																44	1.008	02
		L		L		L		L		L		L		L		46	0.362	01
02	06	10	14	18	22	26	30	34	38	42	46	50	54	58				

CORE AVERAGE RADIAL POWER DISTRIBUTION

RING #	1	2	3	4	5	6	7	8
REL PW	1.123	1.259	1.138	1.202	1.123	1.261	1.087	0.497

TRAINING USE ONLY

FERMI CYCLE 11 INSTRUMENT READINGS/STATUS SEQUENCE NO 11

CALIBRATED LPRM READINGS 20-FEB-2006 09:00 CALCULATED

20-FEB-2006 09:01 PRINTED

CASE IS FMLD1050609105759

LPRM SHAPE - FULL CORE

57 D		20.0	26.5	26.3	22.3		
C		23.8	32.2	31.1	29.2		
B		26.0	38.8	40.0	35.3		
A		23.3	41.5	39.0	37.5		
49 D	20.7	27.9	30.1	30.3	29.7	24.7	
C	25.8	40.6	40.7	38.7	39.6	25.8	
B	28.9	49.3	49.8	53.9	50.6	43.7	
A	27.4P	58.9	56.9	63.8	62.1	52.3	
41 D	26.2	29.7	31.9	34.2	30.2	28.8	22.5
C	35.9	39.5	42.4	40.5	40.2	38.7	30.2
B	46.8	48.9	53.2	52.8	53.2	50.5	36.6
A	64.8	55.0	53.7	52.7	60.6	63.4	39.4
33 D	28.1	32.0	35.9	34.5	35.5	31.4M	25.3
C	40.2	42.8	41.1	42.5	41.8	43.3	36.3
B	50.7	53.7	50.4	50.3	53.4	55.0	43.2
A	69.7	56.9	50.7	58.9	53.7	43.4	41.0
25 D	28.4	31.7	34.7	35.4	31.3	28.9	25.6
C	39.1	43.0	44.6	40.9	41.5	38.8	32.6
B	51.1	53.1	56.7	52.0	52.9	51.1	39.5
A	66.0	51.2	56.4	50.8	57.7	51.2	44.1
17 D	22.1	30.7	31.8C	32.9	29.4	26.9	19.4
C	31.2	41.7	43.7	44.0	38.4	39.3	23.7
B	40.1	53.4	54.3	54.6	49.4	49.8	26.0
A	51.7	61.6	49.6	54.8	58.5	61.5	24.6
09 D		23.6	28.9	29.5	26.8	21.1	
C		39.3	39.6	41.6	38.6	25.5	
B		42.4	50.6	51.4	47.6	28.8	
A		51.6	64.7	66.3	63.0	28.0	
	08	16	24	32	40	48	56

FAILED SENSORS

LPRM (0 SIGNALS FAILED)

LPRM (0 PANACEA REJECTED)

OTHER SENSORS (0 TOTAL)

SUB RODS

NONE

T = T I P RUN RECOMMENDED

C = MFLCPR LOCATION

M = MAPRAT LOCATION

D = MFLPD LOCATION

P = PCRAT LOCATION

* = MULTIPLE LIMIT

CORE SUMMARY

CORE POWER	100 %	CALC SUB FLOW	94.1%	DP MEAS PSI	13.681
CORE FLOW	92.3 %	OPER SUB FLOW	-1.0%	DP CALC PSI	18.836
LOAD LINE	104.9 %	FLOW BASIS	MEAS	FEEDWTR FLOW MLB/HR	14.81

APRM CALIBRATION

	1	2	3	4
READING	99.9	99.9	99.8	99.9
AGAF	1.001	1.001	1.002	1.001
APRM - %CTP	-0.1	-0.1	-0.2	-0.1

TIP RUNS RECOMMENDED

STRINGS : NONE

Job Position SRO / RO	No. 08-A-002	Revision 2
JPM Title Perform Thermal Limit Verification (MAPRAT) (**BANK**)	Duration 15 minutes	Page COVER SHEET

Examinee: _____ SRO / RO / NO / STA

Evaluator: _____

JPM Type: **Normal** / Alternate Path **/** Time Critical

Evaluation Method: **Perform** / Walkthrough / Discuss

(Circle method used) **Plant** / **Simulator** / **Classroom**

Start Time _____

Stop Time _____

Total Time: _____

PERFORMANCE EVALUATION SUMMARY							
Element	S	U	Comments	Element	S	U	Comments
1.							
2.							
3.							
*** 4.**							
*** 5.**							
*** 6.**							
7.							
*** 8.** (SRO)							

_____ SATISFACTORY _____ UNSATISFACTORY

OVERALL EVALUATOR COMMENTS:

Evaluator Signature / Date: _____ / _____

JPM Title Perform Thermal Limit Verification (MAPRAT)	No.: 08-A-002 Revision: 2 Page 1

Preferred Evaluation Method:

Perform X Walkthrough _____ Discuss _____

Plant X Simulator X Classroom X

System:

N/A

Task:

02A0006026 - Perform Shiftly, Daily, Weekly, and Situation Required Performance Evaluations

References: Required (R) / Available (A)

24.000.02, "Shiftly, Daily and Weekly Required Surveillances", Attachment 2 (p. 19 of 24) (R)

Tools and Equipment Required:

3DM Edit Printout

Initial Conditions:

- You are the Patrol NSO.
- The STA has indicated that 3DM limits are reflective of the status of the MSR and BPVs.
- There has been no TAU change. This is the latest 3DM edit.

Initiating Cue(s):

The CRS directs you to complete Step 16 of 24.000.02, Attachment 2, Core Thermal Limit Verification.

Terminating Cue(s):

Surveillance is complete (RO).

Appropriate TS and limiting time identified (SRO).

Task Standard:

Perform Core Thermal Limit verification in accordance with 24.000.02 Attachment 2 (Step 16)

Licensed Operator Exam Information (required for NRC exams)

Safety Function:

N/A

K/A Reference: (from NUREG 1123)

K/A SYSTEM: 293009 - Core Thermal Limits

K/A STATEMENT:

GENERIC 2.1.7 - Ability to evaluate plant performance and make operational judgments based on operating characteristics / reactor behavior / and instrument interpretation. **RO 4.4 / SRO 4.7**

Maintenance Rule Safety Classification:

N/A

Maintenance Rule Risk Significant? (Yes or No)

N/A

PERFORMANCE EVALUATION

Start Time _____

ELEMENT		STANDARD	
PREREQUSITES: None			
CUE:	**Provide Examinee with CUE SHEET. Hand a copy of 24.000.02 and 3DM edit to the Examinee.**		
1.	Verify LPRMs are not failed (except for Bypassed LPRMs) and no other sensors are failed which affect the Heat Balance	1.	Verifies there are no failed LPRMs or other sensors shown on the 3DM edit.
2.	Verify Flow basis is “MEAS	2.	Verifies Flow basis is “MEAS”.
3.	If failed sensors exist (other than Bypassed or PANACEA-rejected LPRMs) or the flow basis is not “MEAS,” consult with the STA/SNE for appropriate action before continuing.	3.	Verifies no other failed sensors exist on the 3DM edit.
* 4.	Place a check in items a and b when the review is satisfactory or when discrepancies are resolved and logged by the STA/SNE.	* 4.	Checks blocks “a” and “b”. The review is satisfactory.
* 5.	Record Calculated Date and Time (items c and d) of the Core Monitor Periodic Log and verify complete in last 24 hours	* 5.	Records Date and Time and verify complete within the last 24 hours
CUE:	**Acknowledge report that TS is not met.**		
* 6.	Record the listed parameters (items e – h) as they appear on the Core Monitor Periodic Log	* 6.	Records CTP and Thermal Limit values. Identifies that MAPRAT is **1.008**. Notifies CRS that TS is not being met.
7.	Initial blocks.	7.	Initials should **NOT** be signed as Acceptance Criteria is **NOT** met
NOTE:	**RO portion concludes here. Examinee may state that this non-compliance should be noted in the Comments Section.**		
* 8.	Identify the appropriate TS and limiting time. **(SRO only)**	* 8.	Reports that TS 3.2.1 APLHGR Condition A.1 is not met and must be restored within 2 hours.
CUE:	**End JPM when surveillance is complete (RO) and TS and limiting time is identified (SRO).**		

_____ SATISFACTORY _____ UNSATISFACTORY

Stop Time _____

*** Critical Step**

Evaluator Notes:

This JPM may be performed in the plant, simulator, or classroom.

Set up with same LPRMs Bypassed as in the plant.

Obtain a current 3DM printout.

ENSURE ALL INDUSTRIAL AND PERSONNEL SAFETY PRACTICES ARE USED AND ENFORCED AT ALL TIMES.

Generic Notes and Cues:

CMC switches will turn RED and amperage will increase when the switch is rotated to the start position started. The current should initially be five to seven times the normal running amps with the ammeter flashing. As counter EMF is developed, the amperage will lower to the normal running amperage and the ammeter will no longer flash. CMC switches will turn GREEN when the pumps are stopped and amperage will decrease to zero.

Ex.: Pump start: "Switch has been rotated to the start position, red light is lit, green light is out, amperage initially pegs out high, and is now indicating __X__ amps."

Pump stop: "Switch has been rotated to the stop position, green light is lit, red light is out, amperage indicates 0 amps."

Remotely operated valve position is determined with open and close indicating lights. A RED light only would indicate that the valve is open. A GREEN light only would indicate that the valve is closed. Dual indication would indicate that the valve is in some intermediate position.

Manual valves are checked in the closed direction (MOP02 and MOP05). Valve stem position may aid in valve position determination, but cannot be used as Independent Verification (MOP02).

Ex.: Verify valve closed: "Valve handwheel indicates no valve movement in the clockwise direction."

Verify valve open: "Valve handwheel has been rotated slightly in the clockwise direction and returned to the original positions."

Closing a valve: "Valve handwheel has been rotated in the fully clockwise direction until no additional valve movement. Valve stem is down."

Opening a valve: "Valve handwheel has been rotated in the fully counterclockwise direction until no additional valve movement, valve stem is out."

Controllers have an Auto light that is GREEN when selected and AMBER (YELLOW) when Manual is selected. When in Manual, the open and closed pushbuttons control the parameter to be changed by adjusting position or speed. When the deviation meter is nulled, then the process can be shifted to Auto to allow the desired setpoint to control the process.

System Specific Notes and Cues:

NONE

Task Performance and Cues:

The Elements of this JPM are step by step in accordance with the procedure. The Standard is that the procedure is performed as written. The Cues are as listed above for indication or as each step is completed the appropriate information is reported to the examinee. Notify Examinee that time compression may be used for activities performed outside of the Control Room.

Critical Steps:

Critical Tasks are identified by asterisk (*) and **bolded** steps on the cover sheet. Verify that the latest revision of the procedure is used and critical tasks are correctly identified.

FOLLOW-UP DOCUMENTATION QUESTIONS

Reason for follow-up question(s):

Question:

Reference:

Response:

Question:

Reference

Response:

Simulator Setup

IC#:

N/A

Malfunctions:

Number	Title	Value	Delay	Ramp
N/A				

Remote Functions:

Number	Title	Value	Delay	Ramp
N/A				

Override Functions:

Number	Title	Value	Delay	Ramp
N/A				

Special Instructions:

N/A

Cue Sheet

Initial Conditions:

- You are the Patrol NSO.
- The STA has indicated that 3DM limits are reflective of the status of the MSR and BPVs.
- There has been no TAU change. This is the latest 3DM edit.

Initiating Cue(s):

The CRS directs you to complete Step 16 of 24.000.02, Attachment 2, Core Thermal Limit Verification.

AUTHORIZATION TO EXCEED DOSE CONTROL THRESHOLDS FORM

PART 1: IDENTIFICATION

A) Higher Dose Guideline Requested for:

Name: **SSN:**

B) Dose Summary:

❑ Fermi 2 Administrative Dose Guideline
❑ 80% of Federal Dose Limit

	Accumulated Dose (mrem)	**Current Guideline/Limit** (mrem)	**Requested Dose Level** (mrem)
❑ TEDE	_____	_____	_____
❑ Other Specify: _____	_____	_____	_____

C) Extension Justification:

_____
_____
_____
_____
_____
_____
_____
_____

D) Individual's Acknowledgement:

_____ Date: _____
print/sign

E) Part 1 Completed By:

_____ Date: _____
print/sign

PART 2: PROCESSING AND REVIEW (RADIOLOGICAL HEALTH)

A) Form 4 Verified Complete: ❑ Yes ❑ No

B) Lifetime TEDE Dose Calculation:

	TEDE	
Individual's Age (in full years)	_____	years
Lifetime Dose (rem) + New Dose Guideline	_____	rem

C) Comments:

_____
_____
_____
_____

D) Reviewed by Radiological Health Supervision:

_____ Date: _____
print/sign

AUTHORIZATION TO EXCEED DOSE CONTROL THRESHOLDS FORM

PART 3: APPROVAL (APPROPRIATE APPROVING AUTHORITY)

A) Approval Signature:

Individual's Section Head:

_____ Date: _____
print/sign

Radiation Protection Manager:

_____ Date: _____
print/sign

Plant Manager:

_____ Date: _____
print/sign

Vice President, Nuclear Generation:

❑ NA _____ Date: _____
print/sign

Comments/Controls

_____
_____
_____
_____

PART 4: INPUT (RADIOLOGICAL HEALTH)

A) RPMS Input/Update By:

_____ Date: _____
print/sign

B) RPMS Verified By:

_____ Date: _____
print/sign

C) FACS Input/Update By:

_____ Date: _____
print/sign

D) FACS Verified By:

_____ Date: _____
print/sign

E) Radiation Protection Operations Notification:

_____ Date: _____
print/sign

Fermi 2-Radiation Protection
Radiological Survey

Detroit Edison

Area(s) RB-2 N. RWCU Pump Room	RWP. No. 08-1003 08-1010	Continuous coverage Yes (No)	
		Survey Posted (Yes) / No	
Purpose Open G3300-F013A	Date Today	HWC 85 SCFM	
Survey by (Print/Sign) Kevin Schultz / Kevin Schultz	Time 0800	Reactor Power 100 %	
		Surveyor's Dose 100 mrem	

Survey No. 00015-08 Page 1 of 1

Location		Contamination (dpm/100cm²) Beta/gamma	Alpha
2	See Map	1K	N/A
3	See Map	4K	N/A
4	See Map	5K	N/A
5	See Map	16,285	< 20
6	See Map	2K	N/A
7	See Map	80K	N/A

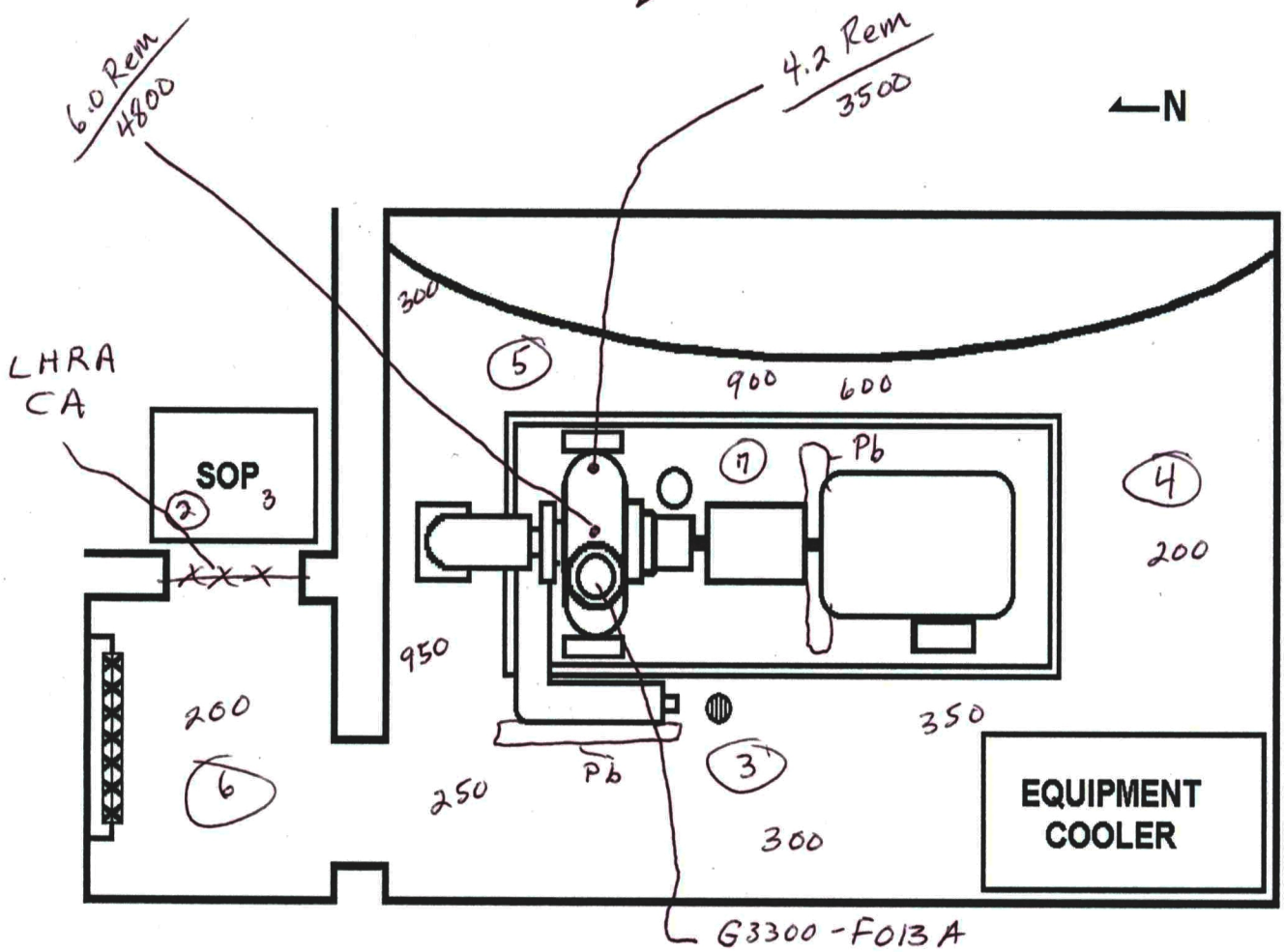

NORTH REACTOR WATER CLEAN-UP PUMP ROOM

R-2-8A

Unless otherwise noted, all dose rate readings are in the following units: Gamma (mR/hr), Beta (mRad/hr), Neutron (mrem/hr).

All smears not listed are <500dpm/100cm²

Instruments

Type	Serial No.	Cal. Due
R50-50E	C524 H	6/08
LO 177	81612	6/08
LB 5100	70915	9/08

Air Sample No.	Results	
N/A	N/A Uci/ml	N/A DAC
Reviewed by Wayne Rutenberg	Date Today	

SHIFT ASSIGNMENTS

DATE: Today

	Nights	Days	
SM	Almes	Hemmele	
CRS	Simone	Crane	
CRNSO	McAllister	Kirchner	
COP H11-P603	Teifer	Conroy	
Patrol	**Leist	**Pearce	
Shift Foreman	O'Hern	Rice	
Other			
Turbine Bldg	*Koss	*F. Brown	
Reactor Bldg	* Woods	* Hughes	
Outside/Fermi 1	Eisenmann	Ward	
Radwaste Op-Assigned	#Toward	# J. Brown	
Radwaste Op-Shift			
Other	*Harter	*Brda	
	*Smith	S. Ness	
		* FP - Grodi	
	*	*	

* Fire Brigade Member ** Fire Brigade Leader # CR Communicator

Job Position RO	No. 08-A-003	Revision 1
JPM Title Determine Dose Limit will be Exceeded and Initiate a Dose Extension (**BANK**)	Duration 20 minutes	Page COVER SHEET

Examinee: _____ SRO / RO / NO / STA

Evaluator: _____

JPM Type: **Normal** / Alternate Path **/** Time Critical

Evaluation Method: **Perform** / Walkthrough / Discuss

(Circle method used) Plant / **Simulator** / **Classroom**

Start Time _____

Stop Time _____

Total Time: _____

PERFORMANCE EVALUATION SUMMARY							
Element	S	U	Comments	Element	S	U	Comments
*** 1.**							
*** 2.**							
*** 3.**							
*** 4.**							
*** 5.**							
*** 6.**							
*** 7.**							
*** 8.**							

_____ SATISFACTORY _____ UNSATISFACTORY

OVERALL EVALUATOR COMMENTS:

Evaluator Signature / Date: _____ / _____

JPM Title Determine Dose Limit will be Exceeded and Initiate a Dose Extension	No.: 08-A-003 Revision: 1 Page 1

Preferred Evaluation Method:

Perform ___X___ Walkthrough _____ Discuss _____

Plant _____ Simulator ___X___ Classroom ___X___

System:

N/A

Task:

13808 - Initiate request for personnel dose extensions.

References: Required (R) / Available (A)

MRP 12, "Authorization To Exceed Dose Control Thresholds" (R)

"Training Only" Survey Map for RWCU room (R)

Tools and Equipment Required:

MRP12001, "Authorization To Exceed Dose Control Thresholds Form"

Initial Conditions:

- You are the Patrol NSO.
- The Shift is trying to restore the N RWCU Pump after a seal replacement.
- G33F013A, North RWCU Pump Discharge Isolation Valve will not open.

Initiating Cue(s):

- You must enter the RWCU pump room to perform an investigation of valve G33F013A, North RWCU Pump Discharge Isolation Valve.
- The estimated time necessary to perform the inspection is 6 minutes.
- The situation is **NOT** an emergency but there is no alternative to performing the inspection.
- RP reports your accumulated dose for the year is 753 mR.
- Perform the necessary requirements to allow this entry to occur.

Terminating Cue(s):

MRP12001 Part 1 is complete.

Task Standard:

MRP12001 Part 1 is complete in accordance with MRP 12.

JPM Title Determine Dose Limit will be Exceeded and Initiate a Dose Extension	No.: 08-A-003 Revision: 1 Page 2

Licensed Operator Exam Information (required for NRC exams)

Safety Function:

N/A

K/A Reference: (from NUREG 1123)

K/A SYSTEM: GENERIC 2.3 – Radiation Control

K/A STATEMENT:

2.3.4 Knowledge of radiation exposure limits and contamination control / including permissible levels in excess of those authorized. .....3.2 / 3.7

Maintenance Rule Safety Classification:

N/A

Maintenance Rule Risk Significant? (Yes or No)

N/A

PERFORMANCE EVALUATION

Start Time _____

ELEMENT		STANDARD	
CUE:	**Provide Examinee with CUE SHEET and copy of survey map of N. RWCU pump room.**		
* 1.	Determine radiation dose in work area.	* 1.	Determines radiation level in the area of the valve is 6 Rem/hr.
NOTE:	**Fermi Admin Guideline = 1 REM/yr TEDE.**		
* 2.	Calculate dose to determine if dose extension is necessary.	* 2.	Dose = 6/60 hr * 6 Rem/hr = 600 mrem. 600 mrem + 753 mrem = 1353 mrem or **1.353 Rem**
CUE:	**Provide examinee the copy of MRP12001. If necessary, direct examinee to complete "Individual" and "Requestor" actions per MRP12. (Examiner may elect to not require SSN.)**		
* 3.	Obtain Procedure MRP 12 and form MRP12001.	* 3.	Obtains procedure and form.
* 4.	Complete part 1A of form MRP 12001.	* 4.	Enters correct information.
CUE:	**Act as Radiation Protection to recommend a new dose limit of 1500 mrem.**		
* 5.	Complete part 1B of MRP 12001.	* 5.	Enters: • Checks Fermi 2 Administrative Dose Guideline • Checks TEDE • Accumulated Dose: 753 mrem • Current Guideline Limit: 1,000 mrem/yr • Requested Dose Level: 1500 mrem
CUE:	**If Examinee questions ALARA options/considerations outlined in MRP, act as the SM and inform the Examinee that options to lower or redistribute dose were considered, but his knowledge, expertise and available dose make this plan the best compromise. Also note that additional engineering controls were evaluated and are not ALARA-effective.**		
* 6.	Complete part 1C	* 6.	Enters – "**options to lower dose or use another worker were considered and were impractical"** (or any similar explanation consistent with intent)**.**
* 7.	Sign part 1D.	* 7.	Examinee signs part 1D.
CUE:	**Act as RP Supervision and accept form from Examinee for processing.**		
* 8.	Complete Part E and route form to RP.	* 8.	Examinee signs 1E.
CUE:	**End JPM when MRP12001 Part 1 is complete.**		

_____ SATISFACTORY _____ UNSATISFACTORY

Stop Time _____ *** Critical Step**

Evaluator Notes:

This JPM should be performed in the simulator control room or classroom.

ENSURE ALL INDUSTRIAL AND PERSONNEL SAFETY PRACTICES ARE USED AND ENFORCED AT ALL TIMES.

Generic Notes and Cues:

CMC switches will turn RED and amperage will increase when the switch is rotated to the start position started. The current should initially be five to seven times the normal running amps with the ammeter flashing. As counter EMF is developed, the amperage will lower to the normal running amperage and the ammeter will no longer flash. CMC switches will turn GREEN when the pumps are stopped and amperage will decrease to zero.

Ex.: Pump start: "Switch has been rotated to the start position, red light is lit, green light is out, amperage initially pegs out high, and is now indicating __X__ amps."

Pump stop: "Switch has been rotated to the stop position, green light is lit, red light is out, amperage indicates 0 amps."

Remotely operated valve position is determined with open and close indicating lights. A RED light only would indicate that the valve is open. A GREEN light only would indicate that the valve is closed. Dual indication would indicate that the valve is in some intermediate position.

Manual valves are checked in the closed direction (MOP02 and MOP05). Valve stem position may aid in valve position determination, but cannot be used as Independent Verification (MOP02).

Ex.: Verify valve closed: "Valve handwheel indicates no valve movement in the clockwise direction."

Verify valve open: "Valve handwheel has been rotated slightly in the clockwise direction and returned to the original positions."

Closing a valve: "Valve handwheel has been rotated in the fully clockwise direction until no additional valve movement. Valve stem is down."

Opening a valve: "Valve handwheel has been rotated in the fully counterclockwise direction until no additional valve movement, valve stem is out."

Controllers have an Auto light that is GREEN when selected and AMBER (YELLOW) when Manual is selected. When in Manual, the open and closed pushbuttons control the parameter to be changed by adjusting position or speed. When the deviation meter is nulled, then the process can be shifted to Auto to allow the desired setpoint to control the process.

System Specific Notes and Cues:

None

Task Performance and Cues:

The Elements of this JPM are step by step in accordance with the procedure. The Standard is that the procedure is performed as written. The Cues are as listed above for indication or as each step is completed the appropriate information is reported to the examinee. Notify Examinee that time compression may be used for activities performed outside of the Control Room.

Critical Steps:

Critical Tasks are identified by asterisk (*) and **bolded** steps on the cover sheet. Verify that the latest revision of the procedure is used and critical tasks are correctly identified.

FOLLOW-UP DOCUMENTATION QUESTIONS

Reason for follow-up question(s):

Question:

Reference:

Response:

Question:

Reference

Response:

Simulator Setup

IC#:

N/A

Malfunctions:

Number	Title	Value	Delay	Ramp
N/A				

Remote Functions:

Number	Title	Value	Delay	Ramp
N/A				

Override Functions:

Number	Title	Value	Delay	Ramp
N/A				

Special Instructions:

N/A

Cue Sheet

Initial Conditions:

- You are the Patrol NSO.
- The Shift is trying to restore the N RWCU Pump after a seal replacement.
- G33F013A, North RWCU Pump Discharge Isolation Valve will not open.

Initiating Cue(s):

- You must enter the RWCU pump room to perform an investigation of valve G33F013A, North RWCU Pump Discharge Isolation Valve.
- The estimated time necessary to perform the inspection is 6 minutes.
- The situation is **NOT** an emergency but there is no alternative to performing the inspection.
- RP reports your accumulated dose this year is 753 mR.
- Perform the necessary requirements to allow this entry to occur.

Job Position SRO	No. 08-A-005	Revision 0
JPM Title Determine Shift Staffing Requirements	Duration 6 minutes	Page COVER SHEET

Examinee: _____ SRO / RO / NO / STA

Evaluator: _____

JPM Type: **Normal** / Alternate Path **/** Time Critical

Evaluation Method: **Perform** / Walkthrough / Discuss

(Circle method used) Plant / **Simulator** / **Classroom**

Start Time _____

Stop Time _____

Total Time: _____

PERFORMANCE EVALUATION SUMMARY							
Element	S	U	Comments	Element	S	U	Comments
*** 1.**							
*** 2.**							
*** 3.**							

_____ SATISFACTORY _____ UNSATISFACTORY

OVERALL EVALUATOR COMMENTS:

Evaluator Signature / Date: _____ / _____

JPM Title Determine Shift Staffing Requirements	No.: 08-A-005 Revision: 0 Page 1

Preferred Evaluation Method:

Perform X Walkthrough _____ Discuss _____

Plant _____ Simulator X Classroom X

System:

N/A

Task:

01A0001078 - Take action on receiving a report that the Relief Individual is not fully capable of performing assigned duties.

References: Required (R) / Available (A)

MOP03 (A)

Tools and Equipment Required:

None

Initial Conditions:

- You are the CRS.
- The time is 1000 Sunday morning with the plant operating at 100% power.

Initiating Cue(s):

- Frank Brown has just informed you that he is leaving immediately due to a personal emergency.
- He has given a turnover to S. Ness, who has just recently completed his proficiency watches as Turbine Building Rounds but is not current on Fire Brigade qualification.
- You are to identify the staffing adjustments that need to be made, recommendations for call-outs, and time constraints.
- Vocalize your thought process and report when you have completed the task.

Terminating Cue(s):

Call-out is made for another NO who is qualified as a Fire Brigade member within 2 hours.

Task Standard:

Shift staffing adjusted and actions taken to meet minimum shift staffing within the time constraints.

JPM Title Determine Shift Staffing Requirements	No.: 08-A-005 Revision: 0 Page 2

Licensed Operator Exam Information (required for NRC exams)

Safety Function:

N/A

K/A Reference: (from NUREG 1123)

K/A SYSTEM: GENERICS 2.1 – Conduct of Operations

K/A STATEMENT:

2.1.4 Knowledge of individual licensed operator responsibilities related to shift staffing, such as medical requirements, “no-solo” operation, maintenance of active license status, 10CFR55, etc. ..... 3.3 / 3.8

Maintenance Rule Safety Classification:

N/A

Maintenance Rule Risk Significant? (Yes or No)

N/A

PERFORMANCE EVALUATION

Start Time _____

ELEMENT		STANDARD	
CUE:	**Provide the examinee the Cue Sheet. Hand the examinee a copy of the attached Shift Assignment sheet if asked for.**		
* 1.	Obtain a copy of the current Shift Assignments sheet to determine the status of shift staffing	* 1.	Identifies that F. Brown was filling a required Fire Brigade position in addition to TB Rounds
* 2.	Identify the time requirements to have minimum staffing positions filled	* 2.	Identifies that minimum staffing must be filled within 2 hours per MOP03
CUE:	**Report as the RO that Scott Harter has been called in to replace Frank Brown as the TB Rounds as well as the Fire Brigade member and will report within 45 minutes.**		
* 3.	Initiate the process for call-out to fill the Fire Brigade member position.	* 3.	Directs an RO to initiate a call-out for the needed individual
CUE:	**End JPM when call-out is made for another NO who is qualified as a Fire Brigade member.**		

_____ SATISFACTORY _____ UNSATISFACTORY

Stop Time _____

*** Critical Step**

Evaluator Notes:

This JPM may be performed anywhere the examinee has access to conduct manuals.

ENSURE ALL INDUSTRIAL AND PERSONNEL SAFETY PRACTICES ARE USED AND ENFORCED AT ALL TIMES.

Generic Notes and Cues:

CMC switches will turn RED and amperage will increase when the switch is rotated to the start position started. The current should initially be five to seven times the normal running amps with the ammeter flashing. As counter EMF is developed, the amperage will lower to the normal running amperage and the ammeter will no longer flash. CMC switches will turn GREEN when the pumps are stopped and amperage will decrease to zero.

Ex.: Pump start: "Switch has been rotated to the start position, red light is lit, green light is out, amperage initially pegs out high, and is now indicating __X__ amps."

Pump stop: "Switch has been rotated to the stop position, green light is lit, red light is out, amperage indicates 0 amps."

Remotely operated valve position is determined with open and close indicating lights. A RED light only would indicate that the valve is open. A GREEN light only would indicate that the valve is closed. Dual indication would indicate that the valve is in some intermediate position.

Manual valves are checked in the closed direction (MOP02 and MOP05). Valve stem position may aid in valve position determination, but cannot be used as Independent Verification (MOP02).

Ex.: Verify valve closed: "Valve handwheel indicates no valve movement in the clockwise direction."

Verify valve open: "Valve handwheel has been rotated slightly in the clockwise direction and returned to the original positions."

Closing a valve: "Valve handwheel has been rotated in the fully clockwise direction until no additional valve movement. Valve stem is down."

Opening a valve: "Valve handwheel has been rotated in the fully counterclockwise direction until no additional valve movement, valve stem is out."

Controllers have an Auto light that is GREEN when selected and AMBER (YELLOW) when Manual is selected. When in Manual, the open and closed pushbuttons control the parameter to be changed by adjusting position or speed. When the deviation meter is nulled, then the process can be shifted to Auto to allow the desired setpoint to control the process.

System Specific Notes and Cues:

None

Task Performance and Cues:

The Elements of this JPM are step by step in accordance with the procedure. The Standard is that the procedure is performed as written. The Cues are as listed above for indication or as each step is completed the appropriate information is reported to the examinee. Notify Examinee that time compression may be used for activities performed outside of the Control Room.

Critical Steps:

Critical Tasks are identified by asterisk (*) and **bolded** steps on the cover sheet. Verify that the latest revision of the procedure is used and critical tasks are correctly identified.

FOLLOW-UP DOCUMENTATION QUESTIONS

Reason for follow-up question(s):

Question:

Reference:

Response:

Question:

Reference

Response:

Simulator Setup

IC#:

N/A

Malfunctions:

Number	Title	Value	Delay	Ramp
N/A				

Remote Functions:

Number	Title	Value	Delay	Ramp
N/A				

Override Functions:

Number	Title	Value	Delay	Ramp
N/A				

Special Instructions:

N/A

Cue Sheet

Initial Conditions:

- You are the CRS.
- The time is 1000 Sunday morning with the plant operating at 100% power.

Initiating Cue(s):

- Frank Brown has just informed you that he is leaving immediately due to a personal emergency.
- He has given a turnover to S. Ness, who has just recently completed his proficiency watches as Turbine Building Rounds but is not current on Fire Brigade qualification.
- You are to identify the staffing adjustments that need to be made, recommendations for call-outs, and time constraints.
- Vocalize your thought process and report when you have completed the task.

Job Position RO	No. 08-A-004	Revision 0
JPM Title Complete and Communicate the Nuclear Plant Technical Data Form (**MODIFIED**)	Duration 20 minutes	Page COVER SHEET

Examinee: _____ SRO / RO / NO / STA

Evaluator: _____

JPM Type: **Normal** / Alternate Path **/** Time Critical

Evaluation Method: **Perform** / Walkthrough / Discuss

(Circle method used) Plant / **Simulator** / **Classroom**

Start Time _____

Stop Time _____

Total Time: _____

PERFORMANCE EVALUATION SUMMARY							
Element	S	U	Comments	Element	S	U	Comments
*** 1.**							
2.							
*** 3.**							
*** 4.**							
5.							
*** 6.**							
7.							
8.							
9.							

_____ SATISFACTORY _____ UNSATISFACTORY

OVERALL EVALUATOR COMMENTS:

Evaluator Signature / Date: _____ / _____

JPM Title Complete and Communicate the Nuclear Plant Technical Data Form	No.: 08-A-004 Revision: 0 Page 1

Preferred Evaluation Method:

Perform ___X___ Walkthrough _____ Discuss _____

Plant _____ Simulator ___X___ Classroom ___X___

System:

N/A

Task:

References: Required (R) / Available (A)

EP-290, "Emergency Notifications" (R)

Tools and Equipment Required:

EP-290002,"Nuclear Plant Technical Data Form", JETFORM or Hard Copy at STA desk. (R)

IPCS "Meteorological Overview" screen printout (O)

Initial Conditions:

- This is **NOT** a drill.
- The Emergency Director has declared a Site Area Emergency (FS1) due to event in progress resulting in loss of reactor coolant fission product barrier and potential loss of fuel clad fission product barrier.
- The Reactor has been shutdown.
- CHRRMs readings have increased.
- Currently the plant is degrading based on a fire having started in the EDG 11 room. Offsite Fire Assistance has been requested.
- All safety systems are currently available with HPCI maintaining RPV level.
- Onsite Assembly and Accountability has been completed.
- The Dose Assessment is not available.
- Offsite Protective action recommendations are not required.
- The State EOC is **NOT** functional.

NOTE: The examinee may request information from the evaluator in accordance with Enclosure B of EP-290. Be prepared to respond to requests, which will typically be that additional information is not yet available.

Initiating Cue(s):

- You are the Control Room Emergency Communicator.
- The Initial Notification is complete and numbered Message 1.
- Fill out the required information for the Follow up Notification (TDF).
- Present the form to the Emergency Director for approval.
- Make the required periodic update to Offsite Authority Telephone Notifications.
- This task is **NOT** time critical.

Terminating Cue(s):

Technical Data Form has been turned in for approval to the Emergency Director. If required by the examiner, offsite notifications are complete. **Examiner may stop task at any time following ED signature.**

Task Standard:

All steps required should be completed within 30 minutes, including:

- Form EP-290002, Technical Data Form, completed with accurately transcribed technical information consistent with the provided sample standard.
- Emergency Director Approval (signature) of the notification form.
- Completion of telephone notifications to Offsite Authorities (if asked for by Examiner).

Licensed Operator Exam Information (required for NRC exams)

Safety Function:

N/A

K/A Reference: (from NUREG 1123)

K/A SYSTEM: GENERIC 2.4 – Emergency Procedures / Plans

K/A STATEMENT:

2.4.39 Knowledge of the RO's responsibilities in emergency plan implementation. ..... 3.9 / 3.8

Maintenance Rule Safety Classification:

N/A

Maintenance Rule Risk Significant? (Yes or No)

N/A

PERFORMANCE EVALUATION

Start Time _____

ELEMENT	STANDARD
PREREQUSITES: None	
CUE: Present Examinee with CUE SHEET.	
NOTE: The examinee may request information from the evaluator in accordance with Enclosure B of EP-290. Be prepared to respond to requests, which will typically be that additional information is not yet available.	
* 1. Fill in Actual Event or Drill on the top of the Nuclear Event Notification Form	* 1. Actual Event is checked.
2. Enters Name, Checks calling from Control Room, Plant Message Number and STA Desk Telephone Number.	2. Enters Name, Checks Control Room, enters Message 2 and 771 to complete phone number.
NOTE: Applicable data on IPCS Meteorological Data screen may be recognized by Blue-Green colored outline around data on screen.	
* 3. Enters Meteorological Data.	* 3. Enters: (Data obtained from IPCS terminal) 10M Wind Direction actual reading 10M Wind Speed (mph) actual reading Stability class actual reading Precipitation actual reading
* 4. Enters Reactor Information.	* 4. Checks Rx Shutdown – Yes Adds comments similar to sample that will convey: • Loss/Potential Loss of 2 FPBs • Degrading conditions • Offsite fire assistance has been requested
5. Enter Release/Offsite Dose Data.	5. N/A – Dose Assessment is not available.
CUE: Examiner should sign as ED.	
* 6. Obtains Emergency Director Signature.	* 6. Emergency Director signs.
NOTE: Completion of Notifications (making simulated phone calls) is at the discretion of the evaluator.	
7. Notifies the Monroe County Sheriff by calling 734-243-7070 or Auto dial	7. Monroe County Sheriff notified
8. Notifies the Wayne County Sheriff by calling 734-942-3600	8. Wayne County Sheriff notified

JPM Title Complete and Communicate the Nuclear Plant Technical Data Form	No.: 08-A-004 Revision: 0 Page 4

ELEMENT	STANDARD
9. Notifies the Michigan State Police by calling 517-336-6100	9. Michigan State Police notified
CUE: End JPM when Technical Data Form has been turned in for approval to the Emergency Director. If required by the examiner, offsite notifications are complete.	

_____ SATISFACTORY _____ UNSATISFACTORY

Stop Time _____

*** Critical Step**

Evaluator Notes:

This JPM should be performed in the simulator control room but, can be done in a classroom with IPCS available to obtain data. Alternatively, the provided printout of the "Meteorological Overview" screen may be presented to the Examinee.

Additional Notes

- Telephone number is usually the STA's (communicators desk x4771)
- Plant message number is the sequential number of the message (continued from previous message).
- Initiating condition/ description comes from EP-101 Enclosure A.
- Meteorological data is obtained from the 10 meter MET TOWER screen of IPCS. It may also be obtained from the RERP Web page when IPCS is unavailable.
- Protective action recommendations are only provided for a General Emergency and IAW EP-545.

A sample completed notification form is provided for comparison. The examinee may request event information from the evaluator in accordance with the Enclosures B of EP- 290. Be prepared to respond to requests, which will typically be that additional information is not yet available.

ENSURE ALL INDUSTRIAL AND PERSONNEL SAFETY PRACTICES ARE USED AND ENFORCED AT ALL TIMES.

Generic Notes and Cues:

CMC switches will turn RED and amperage will increase when the switch is rotated to the start position started. The current should initially be five to seven times the normal running amps with the ammeter flashing. As counter EMF is developed, the amperage will lower to the normal running amperage and the ammeter will no longer flash. CMC switches will turn GREEN when the pumps are stopped and amperage will decrease to zero.

Ex.: Pump start: "Switch has been rotated to the start position, red light is lit, green light is out, amperage initially pegs out high, and is now indicating __X__ amps."

Pump stop: "Switch has been rotated to the stop position, green light is lit, red light is out, amperage indicates 0 amps."

Remotely operated valve position is determined with open and close indicating lights. A RED light only would indicate that the valve is open. A GREEN light only would indicate that the valve is closed. Dual indication would indicate that the valve is in some intermediate position.

Manual valves are checked in the closed direction (MOP02 and MOP05). Valve stem position may aid in valve position determination, but cannot be used as Independent Verification (MOP02).

Ex.: Verify valve closed: "Valve handwheel indicates no valve movement in the clockwise direction."

Verify valve open: "Valve handwheel has been rotated slightly in the clockwise direction and returned to the original positions."

Closing a valve: "Valve handwheel has been rotated in the fully clockwise direction until no additional valve movement. Valve stem is down."

Opening a valve: "Valve handwheel has been rotated in the fully counterclockwise direction until no additional valve movement, valve stem is out."

Controllers have an Auto light that is GREEN when selected and AMBER (YELLOW) when Manual is selected. When in Manual, the open and closed pushbuttons control the parameter to be changed by adjusting position or speed. When the deviation meter is nulled, then the process can be shifted to Auto to allow the desired setpoint to control the process.

System Specific Notes and Cues:

None

JPM Title	No.: 08-A-004
Complete and Communicate the Nuclear Plant Technical Data Form	Revision: 0 Page 6

Task Performance and Cues:

The Elements of this JPM are step by step in accordance with the procedure. The Standard is that the procedure is performed as written. The Cues are as listed above for indication or as each step is completed the appropriate information is reported to the examinee. Notify Examinee that time compression may be used for activities performed outside of the Control Room.

Critical Steps:

Critical Tasks are identified by asterisk (*) and **bolded** steps on the cover sheet. Verify that the latest revision of the procedure is used and critical tasks are correctly identified.

FOLLOW-UP DOCUMENTATION QUESTIONS

Reason for follow-up question(s):

Question:

Reference:

Response:

Question:

Reference

Response:

Simulator Setup

IC#:

N/A

Malfunctions:

Number	Title	Value	Delay	Ramp
N/A				

Remote Functions:

Number	Title	Value	Delay	Ramp
N/A				

Override Functions:

Number	Title	Value	Delay	Ramp
N/A				

Special Instructions:

IPCS data available in Simulator. MET information is only required data.

Cue Sheet

Initial Conditions:

- This is **NOT** a drill.
- The Emergency Director has declared a Site Area Emergency (FS1) due to event in progress resulting in loss of reactor coolant fission product barrier and potential loss of fuel clad fission product barrier.
- The Reactor has been shutdown.
- CHRRMs readings have increased.
- Currently the plant is degrading based on a fire having started in the EDG 11 room. Offsite Fire Assistance has been requested.
- All safety systems are currently available with HPCI maintaining RPV level.
- Onsite Assembly and Accountability has been completed.
- The Dose Assessment is not available.
- Offsite Protective action recommendations are not required.
- The State EOC is **NOT** functional.

Initiating Cue(s):

- You are the Control Room Emergency Communicator.
- The Initial Notification is complete and numbered Message 1.
- Fill out the required information for the Follow up Notification (TDF).
- Present the form to the Emergency Director for approval.
- Make the required periodic update to Offsite Authority Telephone Notifications.
- This task is **NOT** time critical.

Job Position SRO	No. 08-A-006	Revision 0
JPM Title Determine Dose Limit Complete a Dose Extension (**BANK**)	Duration 20 minutes	Page COVER SHEET

Examinee: _____ SRO / RO / NO / STA

Evaluator: _____

JPM Type: **Normal** / Alternate Path **/** Time Critical

Evaluation Method: **Perform** / Walkthrough / Discuss

(Circle method used) Plant / **Simulator** / **Classroom**

Start Time _____

Stop Time _____

Total Time: _____

PERFORMANCE EVALUATION SUMMARY							
Element	S	U	Comments	Element	S	U	Comments
*** 1.**							
*** 2.**							
*** 3.**							
*** 4.**							
*** 5.**							
*** 6.**							
*** 7.**							
*** 8.**							
*** 9.**							
***10.**							

_____ SATISFACTORY _____ UNSATISFACTORY

OVERALL EVALUATOR COMMENTS:

JPM Title Determine Dose Limit Complete a Dose Extension	No.: 08-A-006 Revision: 0 Page 1

Evaluator Signature / Date: _____ / _____

JPM Title Determine Dose Limit Complete a Dose Extension	No.: 08-A-006 Revision: 0 Page 2

Preferred Evaluation Method:

Perform ___X___ Walkthrough _____ Discuss _____

Plant _____ Simulator ___X___ Classroom ___X___

System:

N/A

Task:

13808 - Initiate request for personnel dose extensions.

References: Required (R) / Available (A)

MRP 12, "Authorization To Exceed Dose Control Thresholds" (R)

Training RWP for RWCU room (A)

Tools and Equipment Required:

MRP12001, "Authorization To Exceed Dose Control Thresholds Form"

Initial Conditions:

- You are the CRS.
- The Shift is trying to restore the N RWCU Pump after a seal replacement. G33F013A, North RWCU Pump Discharge Isolation Valve will not open.
- The Patrol NSO must enter the N RWCU pump room to perform an investigation of a G33F013A, North RWCU Pump Discharge Isolation Valve.
- Current Dose Rate in the area of the inspection has been measured at 6,000 mrem/hr.
- The estimated time necessary to perform the inspection is 6 minutes.

Initiating Cue(s):

- The Patrol NSO (Charles Smith) total exposure for the year is 753 mrem TEDE.
- The situation is **NOT** an emergency but there is no alternative to performing the inspection.
- RP reports your accumulated dose for the year is 753 mR.
- Perform the necessary requirements to allow this entry to occur.

Terminating Cue(s):

MRP12001 Part 1 is complete.

Task Standard:

Authorization to exceed Fermi 2 Administrative Guidelines is obtained in accordance with MRP 12.

JPM Title Determine Dose Limit Complete a Dose Extension	No.: 08-A-006 Revision: 0 Page 3

Licensed Operator Exam Information (required for NRC exams)

Safety Function:

N/A

K/A Reference: (from NUREG 1123)

K/A SYSTEM: GENERIC 2.3 – Radiation Control

K/A STATEMENT:

2.3.4 Knowledge of radiation exposure limits and contamination control / including permissible levels in excess of those authorized. .....3.2 / 3.7

Maintenance Rule Safety Classification:

N/A

Maintenance Rule Risk Significant? (Yes or No)

N/A

PERFORMANCE EVALUATION

Start Time _____

ELEMENT		STANDARD	
CUE:	**Provide Examinee with CUE SHEET and copy of RWP for RWCU pump room.**		
* 1.	Determine radiation dose in work area.	* 1.	Determines radiation level in the area of the valve is 6 Rem/hr.
CUE:	**RP reports Charles Smith's accumulated dose this year is 753 mR.**		
NOTE:	**Fermi Admin Guideline = 1 REM/yr TEDE.**		
* 2.	Calculate dose to determine if dose extension is necessary.	* 2.	Dose = 6/60 hr * 6 Rem/hr = 600 mrem. 600 mrem + 753 mrem = 1353 mrem or **1.353 Rem**
CUE:	**Provide examinee the copy of MRP12001.**		
* 3.	Obtain Procedure MRP 12 and form MRP12001.	* 3.	Obtains procedure and form.
CUE:	**Charles Smith is the NSO, and his SSN is 111-11-1111.**		
* 4.	Complete part 1A of form MRP 12001.	* 4.	Enters correct information.
CUE:	**If desired, act as Radiation Protection to recommend a new dose limit of 1500 mrem.**		
* 5.	Complete part 1B of MRP 12001.	* 5.	Enters: • Checks Fermi 2 Administrative Dose Guideline • Checks TEDE • Accumulated Dose: 753 mrem • Current Guideline Limit: 1,000 mrem/yr • Requested Dose Level: 1500 mrem
CUE:	**If Examinee questions ALARA options/considerations outlined in MRP, inform the Examinee that options to lower or redistribute dose were considered, but this worker's knowledge, expertise and available dose make this plan the best compromise. Also note that additional engineering controls were evaluated and are not ALARA-effective.**		
* 6.	Complete part 1C	* 6.	Enters – "**No other individual available with lower dose, exposure time to short for other practical dose reduction methods"** (or any similar explanation consistent with intent)**.**
CUE:	**When requested by the Examinee, acknowledge the extension request by completing part 1D.**		
* 7.	Request NSO sign part 1D.	* 7.	Examiner signs part 1D for Charles Smith.
* 8.	Complete Part E.	* 8.	Examinee signs 1E.

JPM Title Determine Dose Limit Complete a Dose Extension	No.: 08-A-006 Revision: 0 Page 5

ELEMENT		STANDARD	
CUE:	**Act as Radiological Health personnel and accept form.**		
CUE:	**Acting as Radiological Health, complete Part 2 of Form MRP12001 as follows:** **A. Check "Yes"** **B. Enter age as "32" years** **C. Enter dose of "4.235" rem** **D. Enter "Individual's dose records updated"** **E. Sign and date**		
CUE:	**Tell Examinee that part 2 of MRP 12001 is complete, and return the form to Examinee.**		
* 9.	Route form to Radiological Health.	* 9.	Routes form to Radiological Health.
CUE:	**Act as each specified individual and sign as requested.**		
NOTE:	**If the Examinee obtains the Site VP signature, make an exam comment because this is only required to exceed 80% of the Fed Limit.**		
*10.	Obtain appropriate approvals as required by MRP12 Enclosure B.	*10.	Obtain approvals from: • Operations Manager • Radiation Protection Manager • Plant Manager
CUE:	**End JPM when MRP12001 Part 1 is complete.**		

_____ SATISFACTORY _____ UNSATISFACTORY

Stop Time _____ *** Critical Step**

Evaluator Notes:

This JPM should be performed in the simulator control room or classroom.

ENSURE ALL INDUSTRIAL AND PERSONNEL SAFETY PRACTICES ARE USED AND ENFORCED AT ALL TIMES.

Generic Notes and Cues:

CMC switches will turn RED and amperage will increase when the switch is rotated to the start position started. The current should initially be five to seven times the normal running amps with the ammeter flashing. As counter EMF is developed, the amperage will lower to the normal running amperage and the ammeter will no longer flash. CMC switches will turn GREEN when the pumps are stopped and amperage will decrease to zero.

Ex.: Pump start: "Switch has been rotated to the start position, red light is lit, green light is out, amperage initially pegs out high, and is now indicating __X__ amps."

Pump stop: "Switch has been rotated to the stop position, green light is lit, red light is out, amperage indicates 0 amps."

Remotely operated valve position is determined with open and close indicating lights. A RED light only would indicate that the valve is open. A GREEN light only would indicate that the valve is closed. Dual indication would indicate that the valve is in some intermediate position.

Manual valves are checked in the closed direction (MOP02 and MOP05). Valve stem position may aid in valve position determination, but cannot be used as Independent Verification (MOP02).

Ex.: Verify valve closed: "Valve handwheel indicates no valve movement in the clockwise direction."

Verify valve open: "Valve handwheel has been rotated slightly in the clockwise direction and returned to the original positions."

Closing a valve: "Valve handwheel has been rotated in the fully clockwise direction until no additional valve movement. Valve stem is down."

Opening a valve: "Valve handwheel has been rotated in the fully counterclockwise direction until no additional valve movement, valve stem is out."

Controllers have an Auto light that is GREEN when selected and AMBER (YELLOW) when Manual is selected. When in Manual, the open and closed pushbuttons control the parameter to be changed by adjusting position or speed. When the deviation meter is nulled, then the process can be shifted to Auto to allow the desired setpoint to control the process.

System Specific Notes and Cues:

None

Task Performance and Cues:

The Elements of this JPM are step by step in accordance with the procedure. The Standard is that the procedure is performed as written. The Cues are as listed above for indication or as each step is completed the appropriate information is reported to the examinee. Notify Examinee that time compression may be used for activities performed outside of the Control Room.

Critical Steps:

Critical Tasks are identified by asterisk (*) and **bolded** steps on the cover sheet. Verify that the latest revision of the procedure is used and critical tasks are correctly identified.

FOLLOW-UP DOCUMENTATION QUESTIONS

Reason for follow-up question(s):

Question:

Reference:

Response:

Question:

Reference

Response:

Simulator Setup

IC#:

N/A

Malfunctions:

Number	Title	Value	Delay	Ramp
N/A				

Remote Functions:

Number	Title	Value	Delay	Ramp
N/A				

Override Functions:

Number	Title	Value	Delay	Ramp
N/A				

Special Instructions:

N/A

Cue Sheet

Initial Conditions:

- You are the CRS.
- The Shift is trying to restore the N RWCU Pump after a seal replacement. G33F013A, North RWCU Pump Discharge Isolation Valve will not open.
- The Patrol NSO must enter the N RWCU pump room to perform an investigation of a G33F013A, North RWCU Pump Discharge Isolation Valve.
- Current Dose Rate in the area of the inspection has been measured at 6,000 mrem/hr.
- The estimated time necessary to perform the inspection is 6 minutes.

Initiating Cue(s):

- The Patrol NSO (Charles Smith) total exposure for the year is 753 mrem TEDE.
- The situation is **NOT** an emergency but there is no alternative to performing the inspection.
- RP reports your accumulated dose for the year is 753 mR.
- Perform the necessary requirements to allow this entry to occur.

NUCLEAR PLANT EVENT TECHNICAL DATA FORM INFORMATION SOURCES AND REQUIREMENTS

Information Sources

Section	Control Room	TSC	EOF
Meteorological Data	Chemistry Technician	RPA	RPC
Reactor Information	ED	ED	EO
Plant Status/Additional Information	ED	ED	EO
Release/Offsite Dose Data	Chemistry Technician	RPA	RPC
Measured Offsite Radiation Levels	RET Leader	RPA	RPC

Information Requirements

Top of Page 1	Check "Actual Event" or "Drill," as applicable.
Plant Contact Information	Identify the facility calling from, message number and the "call-back" number.
Meteorological Data	The IPCS "Straight Line Plume Plot" is the preferred information source.
Reactor Information	Is the reactor shutdown? Include time of shutdown, as applicable.
Plant Status/Additional Information	Provide relevant additional information to the classification, Protective Action Recommendations, and emergency. • Write out the initiating condition statement from EP-101. • Are there other potentially classifiable conditions present that could be declared? • What is the status of each of the fission product barriers? What barriers are "lost" or "potentially lost?" • State the prognosis for escalation or termination of the event. • What injection systems or methods are being used to maintain reactor water level? • What safety systems are out-of-service? • What is the prognosis of the emergency response efforts? • Are there any requests for offsite support and assistance? • Are there any onsite protective actions? • Are there any abnormal radiation levels in the plant, out of plant, offsite? • What is the release pathway? • Do not use acronyms. • Avoid technical jargon. Check "N/A" for Page 2 information if there are no dose assessment results or off-site radiological surveys. Do not send Page 2 if "N/A" is marked.
Release/Offsite Dose Data	Identify type of release as airborne or waterborne and the expected duration (normally 4 hours). If release type is "airborne," transfer data from dose report(s) onto form. Identify if using "Actual" or "Potential" data results.
Measured Offsite Radiation Levels	Measured offsite Radiological Emergency Team (RET) data only.

AUTHORIZATION TO EXCEED DOSE CONTROL THRESHOLDS FORM

PART 1: IDENTIFICATION

A) Higher Dose Guideline Requested for:

Name: **SSN:**

B) Dose Summary:

❑ Fermi 2 Administrative Dose Guideline
❑ 80% of Federal Dose Limit

	Accumulated Dose (mrem)	**Current Guideline/Limit** (mrem)	**Requested Dose Level** (mrem)
❑ TEDE	_____	_____	_____
❑ Other Specify: _____	_____	_____	_____

C) Extension Justification:

_____
_____
_____
_____
_____
_____
_____
_____

D) Individual's Acknowledgement:

_____ Date: _____
print/sign

E) Part 1 Completed By:

_____ Date: _____
print/sign

PART 2: PROCESSING AND REVIEW (RADIOLOGICAL HEALTH)

A) Form 4 Verified Complete: ❑ Yes ❑ No

B) Lifetime TEDE Dose Calculation:

	TEDE	
Individual's Age (in full years)	_____	years
Lifetime Dose (rem) + New Dose Guideline	_____	rem

C) Comments:

_____
_____
_____
_____

D) Reviewed by Radiological Health Supervision:

_____ Date: _____
print/sign

AUTHORIZATION TO EXCEED DOSE CONTROL THRESHOLDS FORM

PART 3: APPROVAL (APPROPRIATE APPROVING AUTHORITY)

A) Approval Signature:

Individual's Section Head:

_____ Date: _____
print/sign

Radiation Protection Manager:

_____ Date: _____
print/sign

Plant Manager:

_____ Date: _____
print/sign

Vice President, Nuclear Generation:

❑ NA _____ Date: _____
print/sign

Comments/Controls

_____
_____
_____
_____

PART 4: INPUT (RADIOLOGICAL HEALTH)

A) RPMS Input/Update By:

_____ Date: _____
print/sign

B) RPMS Verified By:

_____ Date: _____
print/sign

C) FACS Input/Update By:

_____ Date: _____
print/sign

D) FACS Verified By:

_____ Date: _____
print/sign

E) Radiation Protection Operations Notification:

_____ Date: _____
print/sign

Fermi 2-Radiation Protection

Radiological Survey

Detroit Edison

Area(s) RB-2 N. RWCU Pump Room	RWP. No. 08-1003 08-1010	Continuous coverage Yes (No) Survey Posted (Yes) / No	
Purpose Open G3300-F013A	Date Today	HWC 85 SCFM	
Survey by (Print/Sign) Kevin Schultz / Kevin Schutz	Time 0800	Reactor Power 100 %	Surveyor's Dose 100 mrem

Survey No. 00015-08 Page 1 of 1

Location		Contamination (dpm/100cm²) Beta/gamma	Alpha
2	See Map	1K	N/A
3	See Map	4K	N/A
4	See Map	5K	N/A
5	See Map	16,285	< 20
6	See Map	2K	N/A
7	See Map	80K	N/A

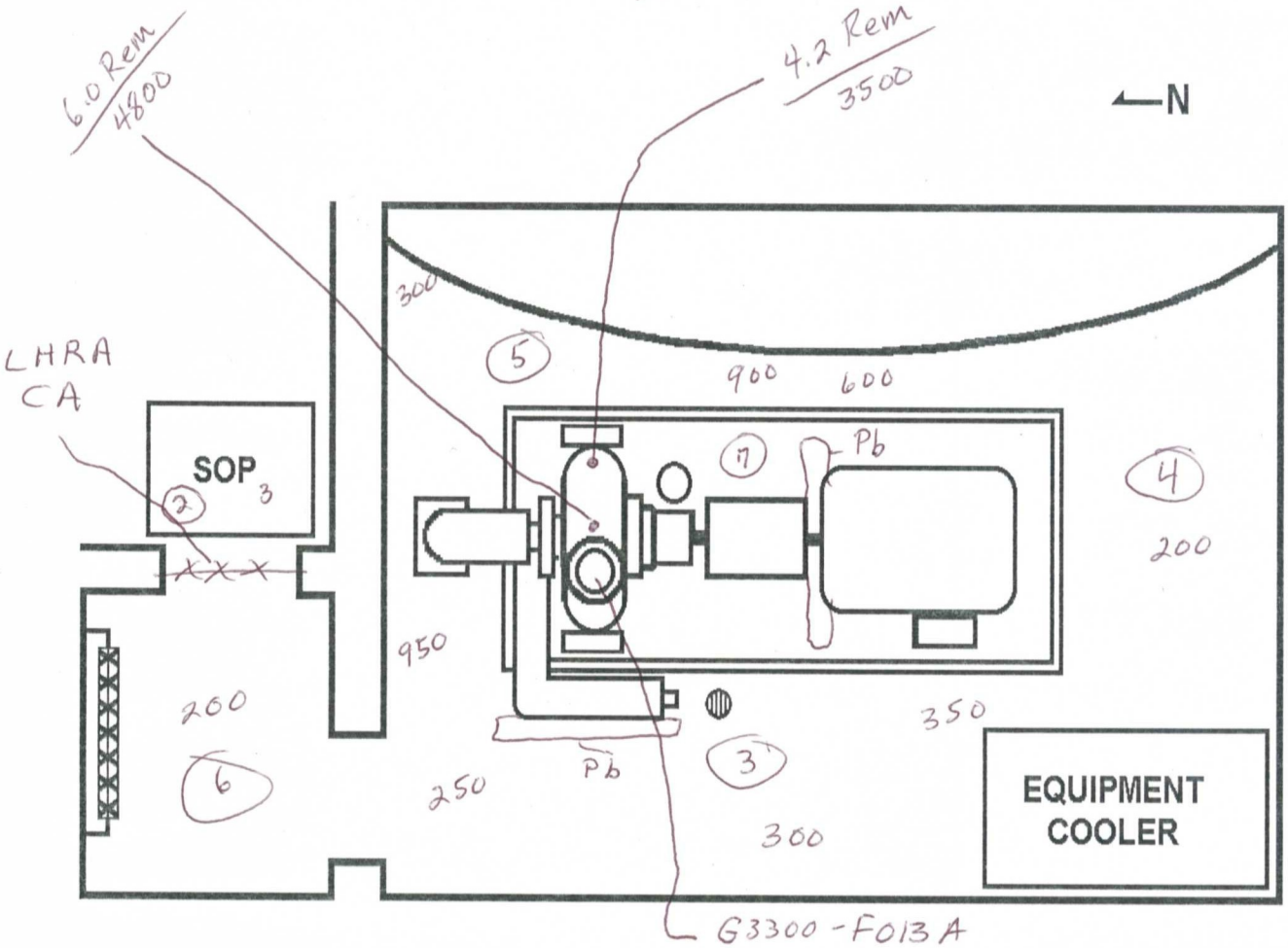

NORTH REACTOR WATER CLEAN-UP PUMP ROOM R-2-8A

Unless otherwise noted, all dose rate readings are in the following units: Gamma (mR/hr), Beta (mRad/hr), Neutron (mrem/hr).

All smears not listed are <500dpm/100cm²

Instruments

Type	Serial No.	Cal. Due
R50-50E	C524 H	6/08
LO 177	81612	6/08
LB 5100	70915	9/08

Air Sample No.	Results	
N/A	N/A Uci/ml	N/A DAC

Reviewed by Wayne Rutenberg Date Today

Job Position SRO	No. 08-A-007	Revision 0
JPM Title On-Site Protective Actions and Classification for Security Event (**MODIFIED**)	Duration 15 minutes	Page COVER SHEET

Examinee: _____ SRO / RO / NO / STA

Evaluator: _____

JPM Type: **Normal** / Alternate Path **/** Time Critical

Evaluation Method: **Perform** / Walkthrough / Discuss

(Circle method used) Plant / **Simulator** / **Classroom**

Start Time _____

Stop Time _____

Total Time: _____

PERFORMANCE EVALUATION SUMMARY							
Element	S	U	Comments	Element	S	U	Comments
*** 1.**							
*** 2.**							
*** 3.**							

_____ SATISFACTORY _____ UNSATISFACTORY

OVERALL EVALUATOR COMMENTS:

Evaluator Signature / Date: _____ / _____

JPM Title On-Site Protective Actions and Classification for Security Event	No.: 08-A-007 Revision: 0 Page 1

Preferred Evaluation Method:

Perform X Walkthrough _____ Discuss _____

Plant _____ Simulator X Classroom X

System:

N/A

Task:

01A0005099 - Direct and Supervise the Shift Team During Abnormal Operations

References: Required (R) / Available (A)

EP-530, "Assembly, Accountability & Onsite Protective Actions" (R)

EP-101, "Classification Of Emergencies" (R)

Tools and Equipment Required:

None

Initial Conditions:

- You are the Shift Manager.
- The Reactor is shutdown.
- Reactor level and pressure are being controlled in normal bands.
- No other EOP entry conditions exist.
- The CRS is executing the Hostile Threat AOP.

Initiating Cue(s):

- A Hostile Attack is in progress from an unknown group of approximately 5 to 10 armed individuals.
- These individuals have attacked the EF2 Drive Gate House and obtained entry into the Owner Controlled Area. They are on the 120 KV Mat.
- Perform on-site protective actions and classify the event.

Terminating Cue(s):

An ALERT has been declared by the Emergency Director.

Task Standard:

Determine On-Site Protective actions for a Security Threat per EP-530, and Classify the event per EP-101.

JPM Title On-Site Protective Actions and Classification for Security Event	No.: 08-A-007 Revision: 0 Page 2

Licensed Operator Exam Information (required for NRC exams)

Safety Function:

N/A

K/A Reference: (from NUREG 1123)

K/A SYSTEM: GENERIC 2.4 – Emergency Procedures / Plan

K/A STATEMENT:

2.4.40 Knowledge of the SRO's responsibilities in emergency plan implementation. ..... 2.7 / 4.5

Maintenance Rule Safety Classification:

N/A

Maintenance Rule Risk Significant? (Yes or No)

N/A

PERFORMANCE EVALUATION

Start Time _____

ELEMENT	STANDARD
PREREQUSITES: None	
CUE: Present Examinee with CUE SHEET.	
NOTE: Examinee should use EP-530 Enclosure B, and execute steps for Hostile Threat in progress.	
* 1. Sound the Plant Area Alarm.	* 1. Sounds the Plant Area Alarm.
* 2. Make the following announcement using Hi-Com override: "Attention all personnel. There is a hostile attack in progress on the Fermi 2 site. All personnel take cover immediately!" Repeat the announcement.	* 2. Makes the announcement.
* 3. Declare an ALERT – HA8, Security Event in a Plant Protected Area.	* 3. Declares an ALERT.
CUE: End JPM when an ALERT has been declared by the Emergency Director.	

_____ SATISFACTORY _____ UNSATISFACTORY

Stop Time _____

*** Critical Step**

Evaluator Notes:

This JPM should be performed in the simulator control room.

ENSURE ALL INDUSTRIAL AND PERSONNEL SAFETY PRACTICES ARE USED AND ENFORCED AT ALL TIMES.

Generic Notes and Cues:

CMC switches will turn RED and amperage will increase when the switch is rotated to the start position started. The current should initially be five to seven times the normal running amps with the ammeter flashing. As counter EMF is developed, the amperage will lower to the normal running amperage and the ammeter will no longer flash. CMC switches will turn GREEN when the pumps are stopped and amperage will decrease to zero.

Ex.: Pump start: "Switch has been rotated to the start position, red light is lit, green light is out, amperage initially pegs out high, and is now indicating __X__ amps."

Pump stop: "Switch has been rotated to the stop position, green light is lit, red light is out, amperage indicates 0 amps."

Remotely operated valve position is determined with open and close indicating lights. A RED light only would indicate that the valve is open. A GREEN light only would indicate that the valve is closed. Dual indication would indicate that the valve is in some intermediate position.

Manual valves are checked in the closed direction (MOP02 and MOP05). Valve stem position may aid in valve position determination, but cannot be used as Independent Verification (MOP02).

Ex.: Verify valve closed: "Valve handwheel indicates no valve movement in the clockwise direction."

Verify valve open: "Valve handwheel has been rotated slightly in the clockwise direction and returned to the original positions."

Closing a valve: "Valve handwheel has been rotated in the fully clockwise direction until no additional valve movement. Valve stem is down."

Opening a valve: "Valve handwheel has been rotated in the fully counterclockwise direction until no additional valve movement, valve stem is out."

Controllers have an Auto light that is GREEN when selected and AMBER (YELLOW) when Manual is selected. When in Manual, the open and closed pushbuttons control the parameter to be changed by adjusting position or speed. When the deviation meter is nulled, then the process can be shifted to Auto to allow the desired setpoint to control the process.

System Specific Notes and Cues:

None

Task Performance and Cues:

The Elements of this JPM are step by step in accordance with the procedure. The Standard is that the procedure is performed as written. The Cues are as listed above for indication or as each step is completed the appropriate information is reported to the examinee. Notify Examinee that time compression may be used for activities performed outside of the Control Room.

Critical Steps:

Critical Tasks are identified by asterisk (*) and **bolded** steps on the cover sheet. Verify that the latest revision of the procedure is used and critical tasks are correctly identified.

FOLLOW-UP DOCUMENTATION QUESTIONS

Reason for follow-up question(s):

Question:

Reference:

Response:

Question:

Reference

Response:

Simulator Setup

IC#:

N/A

Malfunctions:

Number	Title	Value	Delay	Ramp
N/A				

Remote Functions:

Number	Title	Value	Delay	Ramp
N/A				

Override Functions:

Number	Title	Value	Delay	Ramp
N/A				

Special Instructions:

N/A

Cue Sheet

Initial Conditions:

- You are the Shift Manager.
- The Reactor is shutdown.
- Reactor level and pressure are being controlled in normal bands.
- No other EOP entry conditions exist.
- The CRS is executing the Hostile Threat AOP.

Initiating Cue(s):

- A Hostile Attack is in progress from an unknown group of approximately 5 to 10 armed individuals.
- These individuals have attacked the EF2 Drive Gate House and obtained entry into the Owner Controlled Area. They are on the 120 KV Mat.
- Perform on-site protective actions and classify the event.