ENCLOSURE 3

OFFSITE DOSE CALCULATION MANUAL

The Offsite Dose Calculation Manual for the Monticello Nuclear Generating Plant is comprised of the following documents:

Document Number	Title	Revision
ODCM-01.01	Introduction	4
ODCM-02.01	Liquid Effluents	6
ODCM-03.01	Gaseous Effluents	9
ODCM-04.01	Liquid Effluent Calculations	2
ODCM-05.01	Gaseous Effluent Calculations	6
ODCM-06.01	Dose From All Uranium Fuel Cycle Sources	2
ODCM-07.01	Radiological Environmental Monitoring Program	11
ODCM-08.01	Reporting Requirements	4
ODCM-APP-A	Appendix A	74
ODCM-APP-B	Appendix B	1
ODCM-APP-C	Appendix C	5
ODCM-HISTORY	ODCM History	1

359 Pages Follow

NO.	TITLE
ODCM-01.01	INTRODUCTION
ODCM-02.01	LIQUID EFFLUENTS
ODCM-03.01	GASEOUS EFFLUENTS
ODCM-04.01	LIQUID EFFLUENT CALCULATIONS
ODCM-05.01	GASEOUS EFFLUENT CALCULATIONS
ODCM-06.01	DOSE FROM ALL URANIUM FUEL CYCLE SOURCES
ODCM-07.01	RADIOLOGICAL ENVIRONMENTAL MONITORING PROGRAM
ODCM-08.01	REPORTING REQUIREMENTS
ODCM-APP-A	APPENDIX A
ODCM-APP-B	APPENDIX B
ODCM-APP-C	APPENDIX C
ODCM-HISTORY	ODCM-HISTORY

*This is a major rewrite, therefore no sidelines are required.

Approval: PCR 01127146

M/mlb

OFFSITE DOSE CALCULATION MANUAL - TABLE OF CONTENTS

SECTION		PAGE
1.0	RECORD OF REVISION	2
2.0	OFF-SITE DOSE CALCULATION MANUAL (ODCM) INTRODUCTION	3
2.1	ODCM Description and Control	3
2.2	Licensee Initiated Changes to the ODCM	4
2.3	Definitions	5
2.4	Radiological Effluent Controls And Surveillance Requirement	9

Prepared By:	
Reviewed By:	
OC Final Review Meeting:	Date:
Approved By Plant Manager:	Date:

FOR ADMINISTRATIVE USE ONLY			
3087 (DOCUMENT CHANGE, HOLD, AND COMMENT FORM) incorporated:_____			
Resp Supv: CHEM	Assoc Ref: CHEM-I	SR: N	Freq: 2 yrs
ARMS: ODCM-01.01	Doc Type: 7030	Admin Initials:	Date:

l/plr

1.0 RECORD OF REVISION

Revision No.	Date	Reason for Revision
1	December - 1998	Corrected typo in reference to 10CFR50.36a on page 2, paragraph 1.
2	October - 2000	Incorporated Tech Spec 6.8.A.1, 6.8.A.2, and 6.8.A.3 relating to ODCM control and the relocated definitions into document.
3	January - 2004	Changed definition of "Member of the Public" to the new 10CFR20 definition.
4	June - 2005	Incorporated changes made during the conversion of the Current Technical Specifications to the Improved Technical Specifications. This includes dual step annotation.

GENERAL NOTE: This procedure includes Improved Technical Specifications ([ITS]) information that is NOT applicable to Current Technical Specifications ([CTS]) and [CTS] information that will change when [ITS] is implemented. The [ITS] information *SHALL NOT* be used prior to the [ITS] effective date. On and after the [ITS] effective date, the [ITS] information *SHALL* be used in lieu of the corresponding [CTS] information.

2.0 OFF-SITE DOSE CALCULATION MANUAL (ODCM) INTRODUCTION

2.1 ODCM Description and Control

2.1.1 **[CTS]** In accordance with T.S.6.8.A.1, the ODCM contains the methodology and parameters used in the calculation of off-site doses resulting from radioactive gaseous and liquid effluents, in the calculation of gaseous and liquid effluent monitoring alarm and trip setpoints, and in the conduct of the Radiological Environmental Monitoring Program.

[ITS] In accordance with Tech Spec 5.5.1.a., the ODCM contains the methodology and parameters used in the calculation of off-site doses resulting from radioactive gaseous and liquid effluents, in the calculation of gaseous and liquid effluent monitoring alarm and trip setpoints, and in the conduct of the Radiological Environmental Monitoring Program.

2.1.2 **[CTS]** In accordance with T.S.6.8.A.2, the ODCM also contains the radioactive effluent controls and radiological environmental monitoring activities and descriptions of the information that should be included in the Radiological Environmental Operating Program report and Radioactive Effluent Release reports required by 10CFR50, Appendix I, and 10CFR50.36a.

[ITS] In accordance with Tech Spec 5.5.1.b., the ODCM also contains the radioactive effluent controls and radiological environmental monitoring activities and descriptions of the information that should be included in the Radiological Environmental Operating Program report and Radioactive Effluent Release reports required by 10CFR50, Appendix I, and 10CFR50.36a.

2.2 Licensee Initiated Changes to the ODCM

2.2.1 **[CTS]** In accordance with T.S.6.8.A.3, licensee changes to the ODCM ***SHALL*** be documented and records of reviews performed ***SHALL*** be retained. This documentation ***SHALL*** contain:

A. Sufficient information to support the change(s) together with the appropriate analyses or evaluations justifying the change(s), and

B. A determination that the change(s) maintain the levels of radioactive effluent control required by 10CFR20.1302, 40CFR190, 10CFR50.36a, and 10CFR50, Appendix I, and not adversely impact the accuracy or reliability of effluent, dose, or setpoint calculations.

2.2.2 **[ITS]** In accordance with Tech Spec 5.5.1.c., licensee initiated changes to the ODCM ***SHALL*** be documented and records of review performed ***SHALL*** be retained. This documentation ***SHALL*** contain:

A. Sufficient information to support the change(s) together with the appropriate analyses or evaluations justifying the change(s), and

B. A determination that the change(s) maintain the levels of radioactive effluent control required by 10CFR20.1302, 40CFR190, 10CFR50.36a, and 10CFR50, Appendix I, and not adversely impact the accuracy or reliability of effluent, dose, or setpoint calculations.

2.2.3 Changes ***SHALL*** become effective after review and approval by the Plant Manager.

2.2.4 Changes ***SHALL*** be submitted to the NRC in the form of a complete, legible copy of the entire ODCM as a part of or concurrent with the Radioactive Effluent Release Report for the period of the report in which any change in the ODCM was made. Each change ***SHALL*** be identified by markings in the margin of the affected pages, clearly indicating the area of the page that was changed, and ***SHALL*** indicate the date (i.e., month and year) the change was implemented.

2.3 Definitions

2.3.1 Abnormal Release

An unplanned or uncontrolled release of radioactive material from the plant or a gaseous release where the effluent release rate significantly exceeds an established normal release rate. A release which results from procedural or equipment inadequacies, or personnel errors, that could indicate a deficiency.

2.3.2 Action

ACTION ***SHALL*** be that part of a control which prescribes required actions to be taken under designated conditions within specified completion times.

2.3.3 Batch Release

A BATCH RELEASE is a discharge of liquid or gaseous radioactive effluent of a discrete volume. Prior to sampling for analysis, each batch ***SHALL*** be isolated and thoroughly mixed to assure representative sampling.

2.3.4 Instrument Calibration

An instrument calibration means the adjustment of an instrument signal output so that it corresponds, within acceptable range, accuracy, and response time to a known value(s) of the parameter which the instrument monitors. Calibration ***SHALL*** encompass the entire instrument including actuation, alarm or trip.

2.3.5 Sensor Check

A qualitative determination of operability by observation of sensor behavior during operation. This determination ***SHALL*** include, where possible, comparison with other independent sensor measuring the same variable.

2.3.6 Instrument Functional Test

An instrument functional test means the injection of a simulated signal into the primary sensor to verify proper instrument channel response, alarm, and/or initiating action.

2.3.7 Composite Sample

A COMPOSITE SAMPLE is one in which the quantity of liquid sampled is proportional to the quantity of liquid waste discharged and in which the method of sampling employed results in a specimen which is representative of the liquids released.

2.3.8 Dose Equivalent I-131

DOSE EQUIVALENT I-131 ***SHALL*** be that concentration of I-131 (μCi/gram) that alone would produce the same thyroid dose as the quantity and isotopic mixture of I-131, I-132, I-133, I-134 and I-135 actually present. The thyroid dose conversion factors used for this calculation ***SHALL*** be those listed in Table III of TID-14844, "Calculation of Distance Factors for Power and Test Reactor Sites" or in NRC Regulatory Guide 1.109, Revision 1, October 1977.

2.3.9 Exclusion Area Boundary

The EXCLUSION AREA BOUNDARY is the same as the Site Boundary described in ODCM-03.01 Figure 1. The EXCLUSION AREA is the area encompassed by the EXCLUSION AREA BOUNDARY.

2.3.10 Offgas Treatment System

The OFFGAS TREATMENT SYSTEM ***SHALL*** be any system designed and installed to reduce radioactive effluents by collecting primary coolant system offgas from the primary system and providing for delay or holdup for the purpose of reducing the total radioactivity prior to release to the environment.

2.3.11 Liquid Radwaste Treatment System

The LIQUID RADWASTE TREATMENT SYSTEM ***SHALL*** be any system designed and installed to reduce radioactive effluents by holdup or collecting radioactive materials by means of filtering, evaporation, ion exchange or chemical reaction for the purpose of reducing the total radioactivity prior to release to the environment.

2.3.12 Long Term Release

"Long-term" refers to releases that are generally continuous and stable in release rate with some anticipated variation (i.e., <50%, based on a running monthly average) in release rate, such as is experienced in normal ventilation system effluents at nuclear power plants. Determination of doses due to long-term releases should use the historical annual average relative concentration (χ/Q) based on meteorological data summarized, as recommended in Regulatory Guide 1.111.

2.3.13 Members Of The Public

MEMBERS OF THE PUBLIC is any individual except when that individual is receiving an occupational dose.

2.3.14 Operable - Operability

As defined in the Technical Specifications.

2.3.15 Purge - Purging

PURGE - PURGING ***SHALL*** be any controlled process of discharging air or gas from a confinement to maintain temperature, pressure, humidity, concentration or other operating condition, in such a manner that replacement air or gas is required to purify the confinement.

2.3.16 Radiological Environmental Monitoring Program (REMP)

The RADIOLOGICAL ENVIRONMENTAL MONITORING PROGRAM is established for monitoring the radiation and radionuclides in the environs of the plant. The program ***SHALL*** provide representative measurements of radioactivity in the highest potential exposure pathways and verification of the accuracy of potential exposure pathways and verification of the accuracy of the effluent monitoring program and modeling of the environmental exposure pathways.

2.3.17 Short Term Release

"Short-term" refers to releases that are intermittent in radionuclide concentrations or flow, such as releases from drywell purges and systems or components with infrequent use. Short-term releases may be due to operational variations which result in radioactive releases greater than 50% of the releases normally considered as long-term. Short-term releases from these sources during normal operation, including anticipated operational occurrences, are defined as those which occur for a total of 500 hours or less in a calendar year but not more than 150 hours in any quarter.

2.3.18 Site Boundary

Means a line within which the land is owned, leased, or otherwise controlled by the licensee. The site boundary for liquid releases of radioactive material is defined in ODCM-02.01 (LIQUID EFFLUENT), Figure 1. The site boundary for gaseous releases of radioactive material is defined in ODCM-03.01 (GASEOUS EFFLUENTS), Figure 1.

2.3.19 Source Check

A SOURCE CHECK ***SHALL*** be the qualitative assessment of channel response when the channel sensor is exposed to a radioactive source.

2.3.20 Unrestricted Area

An UNRESTRICTED AREA means any area at or beyond the site boundary to which access is not controlled by the licensee for purposes of protection of individuals from exposure to radiation and radioactive materials or any area within the site boundary used for residential quarters or industrial, commercial, institutional and/or recreational purposes.

2.3.21 Uranium Fuel Cycle

The URANIUM FUEL CYCLE is defined in 40CFR Part 190.02(b) as: "The operation of milling of uranium ore, chemical conversion of uranium, isotopic enrichment of uranium, fabrication of uranium fuel, generation of electricity by a light-water-cooled nuclear power plant using uranium fuel, and reprocessing of spent uranium fuel, to the extent that these directly support the production of electrical power for public use utilizing nuclear energy, but excludes mining operations, operations at waste disposal sites, transportation of any radioactive material in support of these operations, and the use of recovered non-uranium special nuclear and by-product materials from the cycle."

2.3.22 Venting

VENTING ***SHALL*** be the controlled process of discharging air or gas from a confinement to maintain temperature, pressure, humidity, concentration or other operating condition, in such a manner that replacement air or gas is NOT provided or required.

2.4 Radiological Effluent Controls And Surveillance Requirement

2.4.1 Controls

A. Compliance with the controls contained within the succeeding text is required during the conditions specified. Upon failure to meet the control, the associated ACTION requirements ***SHALL*** be met.

B. Noncompliance with a control ***SHALL*** exist when the requirements of the Control and associated ACTION requirements are not met within the specified time interval. If the Control is restored prior to expiration of the specified time interval, completion of the ACTION requirements is not required.

C. Noncompliance with a CONTROL and associated ACTION, or a Surveillance Requirement ***SHALL*** be documented in the annual "Radioactive Effluent Release Report" covering the period of the noncompliance. Documentation of a noncompliance ***SHALL*** identify the cause of the noncompliance, define the corrective actions taken to correct the noncompliance, and a description of actions taken to prevent recurrence.

2.4.2 Surveillance Requirements

A. Surveillance Requirements ***SHALL*** be met during the conditions specified for individual controls unless otherwise stated in an individual Surveillance Requirement.

B. Each Surveillance Requirement ***SHALL*** be performed within the specified time interval with the following exceptions:

1. Specified time intervals between tests may be adjusted plus 25% to accommodate normal test schedules.

C. Failure to perform a Surveillance Requirement within the allowed surveillance interval, defined by Control B. ***SHALL*** constitute noncompliance with the OPERABILITY requirements for a Control for operation. The time limits of the ACTION requirements are applicable at the time it is identified that a Surveillance Requirement has not been performed. The ACTION requirements may be delayed for up to 24 hours to permit the completion of the surveillance when the allowable outage time limits of the ACTION requirements are less than 24 hours. Surveillance Requirements do not have to be performed on inoperable equipment.

OFFSITE DOSE CALCULATION MANUAL - TABLE OF CONTENTS

SECTION		PAGE
1.0	RECORD OF REVISION	2
2.0	LIQUID EFFLUENTS	3
2.1	Concentration	3
2.2	Dose	4
2.3	Liquid Radwaste Treatment Systems	5
2.4	Liquid Holdup Tanks	6
2.5	Bases	7
Figure 1	Monticello Nuclear Generating Plant Site Boundary for Liquid Effluents	10
Table 1	Radioactive Liquid Effluent Monitoring Instrumentation Surveillance Requirements	11
Table 2	Radioactive Liquid Waste Sampling And Analysis Program	12
Table 3	Radioactive Liquid Effluent Monitoring Instrumentation	15

Approval: Kevin Jepson (pcr 01013579)

1.0 RECORD OF REVISION

Revision No.	Date	Reason for Revision
1	December - 1998	Corrected reference to Table 2.1-1 from 2.1.2.
2	October - 2000	Incorporated Radiological Effluents Tech Specs section 3.8.A and 4.8.A. into document.
3	September - 2002	Revised Actions 2.2.3 and 2.3.3 to standardize documentation and reporting.
4	December - 2002	Table numbering was restarted to reflect 1, 2 and 3 verses 3, 4 and 5 throughout the document.
5	August - 2005	Incorporated changes made during the conversion of the Current Technical Specifications to the Improved Technical Specifications. This includes dual step annotation.
6	February - 2006	This change is being submitted per GAR 01012990. There are no additional changes to the procedures. This revision is being issued to allow PORC review of changes made in revision 5. Revision bars for revision 5 are maintained for review purposes.

GENERAL NOTE: This procedure includes Improved Technical Specifications ([ITS]) information that is NOT applicable to Current Technical Specifications ([CTS]) and [CTS] information that will change when [ITS] is implemented. The [ITS] information *SHALL NOT* be used prior to the [ITS] effective date. On and after the [ITS] effective date, the [ITS] information *SHALL* be used in lieu of the corresponding [CTS] information.

2.0 LIQUID EFFLUENTS

2.1 Concentration

2.1.1 Controls

A. **[CTS]** In accordance with T.S.6.8.D.2, the concentration of liquid radioactive material released from the site (Figure 1) ***SHALL*** be limited to ten times the concentration values specified in Appendix B, Table 2, Column 2 of 10CFR20.1001-20.2402 for radionuclides other than dissolved or entrained noble gases. For dissolved or entrained noble gases, the concentration ***SHALL*** be limited to 2×10^{-4} μCi/ml total activity.

[ITS] In accordance with Tech Spec 5.5.3.a, 5.5.3.b, and 5.5.3.c, the concentration of liquid radioactive material released from the site (Figure 1) ***SHALL*** be limited to ten times the concentration values specified in Appendix B, Table 2, Column 2 of 10CFR20.1001-20.2402 for radionuclides other than dissolved or entrained noble gases. For dissolved or entrained noble gases, the concentration ***SHALL*** be limited to 2×10^{-4} μCi/ml total activity.

2.1.2 Applicability

At all times.

2.1.3 Action

A. When the concentration of radioactive material in liquid released from the site exceeds the above limits, immediately restore the concentration within acceptable limits.

B. Radioactive material in liquid effluent released from the site ***SHALL*** be continuously monitored in accordance with Table 3.

C. The liquid effluent monitors having provisions for automatic alarms as listed in Table 3 ***SHALL*** be used to limit the concentration of radioactive material released at any time from the site to the values given in 2.1.1.A. Setpoints ***SHALL*** be determined in accordance with the methods in Section 4.0 of the ODCM.

D. Report all deviations in the Annual Radioactive Effluent Release Report.

2.1.4 Surveillance Requirements

A. Radioactive liquid wastes **SHALL** be sampled and analyzed according to the sampling and analysis program of Table 2.

B. The results of radioactive analysis **SHALL** be used in accordance with the methods of the ODCM to assure that the concentrations at the point of release are maintained within the limits of Control 2.1.1.A.

C. Liquid effluent monitoring instrumentation surveillance ***SHALL*** be performed as required by Table 1.

2.2 Dose

2.2.1 Controls

A. **[CTS]** In accordance with T.S.6.8.D.4, the dose or dose commitment to a MEMBER OF THE PUBLIC from radioactive materials in liquid effluents released from the site ***SHALL*** be limited:

[ITS] In accordance with Tech Spec 5.5.3.a, 5.5.3.c, 5.5.3.d, and 5.5.3.e, the dose or dose commitment to a MEMBER OF THE PUBLIC from material in liquid effluents released from the site ***SHALL*** be limited to the following values:

1. During any calendar quarter to ≤ 1.5 mrem to the total body and to ≤ 5 mrem to any organ, and

2. During any calendar year to ≤ 3 mrem to the total body and to ≤ 10 mrem to any organ.

2.2.2 Applicability

At all times.

2.2.3 Action

A. With the calculated dose from the release of radioactive materials in liquid effluents exceeding any of the above limits, document and report IAW ODCM-01.01, Section 2.4.1.C.

2.2.4 Surveillance Requirements

A. Cumulative dose contributions for the current calendar quarter and current calendar year ***SHALL*** be determined monthly in accordance with the ODCM.

2.3 Liquid Radwaste Treatment Systems

2.3.1 Controls

A. **[CTS]** In accordance with T.S.6.8.D.6, the LIQUID RADWASTE TREATMENT SYSTEM ***SHALL*** be used to reduce the radioactive materials in liquid wastes prior to their discharge when the projected doses, due to the liquid effluent from the site would exceed 0.06 mrem to the whole body or 0.2 mrem to any organ when averaged over one month.

[ITS] In accordance with Tech Spec 5.5.3.a, 5.5.3.c, and 5.5.3.f, the LIQUID RADWASTE TREATMENT SYSTEM ***SHALL*** be used to reduce the radioactive materials in liquid wastes prior to their discharge when the projected doses, due to the liquid effluent from the site would exceed 0.06 mrem to the whole body or 0.2 mrem to any organ when averaged over one month.

2.3.2 Applicability

At all times.

2.3.3 Action

A. With radioactive liquid waste being discharged without treatment and in excess of the above limits, document and report IAW ODCM-01.01, Section 2.4.1.C.

2.3.4 Surveillance Requirements

A. Doses due to liquid releases ***SHALL*** be projected at least once each month in accordance with the ODCM.

2.4 Liquid Holdup Tanks

2.4.1 Controls

A. **[CTS]** In accordance with T.S.6.8.I.3, the quantity of radioactive material contained in each outside temporary tank ***SHALL*** be limited to ≤ 10 curies, excluding tritium and dissolved or entrained gases.

[ITS] In accordance with Tech Spec 5.5.7.c and TRM 5.5.1, the quantity of radioactive material contained in each outside temporary tank ***SHALL*** be limited to ≤ 10 curies, excluding tritium and dissolved or entrained gases.

2.4.2 Applicability

At all times.

2.4.3 Action

A. With the quantity of radioactive material contained in any outside temporary tank exceeding the limit in 2.4.1.A. above, immediately suspend all additions of radioactive material to the tank and within 48 hours reduce the tank contents to within the limit.

2.4.4 Surveillance Requirements

A. The quantity of radioactive material contained in each outside temporary tank ***SHALL*** be determined to be within the limit in 2.4.1.A. by analyzing a representative sample of the tank's contents at least weekly when radioactive materials are being added to the tank.

2.5 Bases

2.5.1 Liquid Effluents

A. Concentration

Control 2.1.1.A. is provided to ensure that the concentration of radioactive materials released in liquid waste effluents to Unrestricted Areas will be less than 10 times the concentration values specified in Appendix B, Table 2, Column 2 to 10CFR20.1001-20.2402. The control provides operational flexibility for releasing liquid effluents in concentrations to follow the Section II.A and II.C design objectives of Appendix I to 10CFR Part 50. This limitation provides reasonable assurance that the levels of radioactive materials in bodies of water in Unrestricted Areas will result in exposures within (1) the Section II.A design objectives of Appendix I, 10CFR Part 50, to a Member of the Public and (2) restrictions authorized by 10CFR20.1301(e). The concentration limit for the dissolved or entrained noble gases is based upon the assumption that Xe-135 is the controlling radionuclide and its effluent concentration in air (submersion) was converted to an equivalent concentration in water. This control does not affect the requirement to comply with the annual limitations of 10CFR20.1301(a).

B. Dose

Control 2.2.1.A. is provided to implement the requirements of Sections II.A, III.A and IV.A of Appendix I, 10CFR Part 50. Action required by Control 2.2.1 provides the required operating flexibility and at the same time implements the guides set forth in Section IV.A of Appendix I to assure that the releases of radioactive material in liquid effluents will be kept "as low as is reasonably achievable". Considering that the nearest drinking water supply using the receiving water is 33 river miles downstream, there is reasonable assurance that the operation of the facility will not result in radionuclide concentrations in the finished drinking water that are in excess of the requirements of 40CFR141.

The dose calculations in the ODCM implement the requirements in Section III.A of Appendix I that conformance with the guides of Appendix I be shown by calculational procedures based on models and data such that the actual exposure of an individual through appropriate pathways is unlikely to be substantially underestimated. The equations specified in the ODCM for calculating the doses due to the actual release rates of radioactive materials in liquid effluents will be consistent with the methodology provided in Regulatory Guide 1.109, "Calculation of Annual Doses to Man from Routine Releases of Reactor Effluents for the Purpose of Evaluating Compliance with

10CFR50, Appendix I," Revision 1, October 1977 and Regulatory Guide 1.113, "Estimating Aquatic Dispersion of Effluents from Accidental and Routine Reactor Releases for the Purpose of Implementing Appendix I, Revision 1," April 1977. NUREG-0133, October 1978 provides methods for dose calculations consistent with Regulatory Guides 1.109 and 1.113.

C. Liquid Radwaste Treatment Systems

Control 2.3.1.A. provides assurance that the liquid radwaste treatment system will be available for use whenever liquid effluents require treatment prior to release to the environment. The requirements that the appropriate portions of this system be used when specified provides assurance that the releases of radioactive materials in liquid effluents will be kept "as low as is reasonably achievable". This control implements the requirements of 10CFR Part 50.36a, General Design Criterion 60 of Appendix A to 10CFR Part 50 and design objective Section II.D of Appendix I to 10CFR Part 50. The specified limits governing the use of appropriate portions of the liquid radwaste treatment system were specified as a suitable fraction of the guide set forth in Section II.A of Appendix I, 10CFR Part 50, for liquid effluents.

The radioactive liquid effluent monitoring instrumentation is provided to monitor and control, as applicable, the releases of radioactive materials in liquid effluents during actual or potential releases of liquid effluents. The Alarm/Trip Setpoint for these instruments **SHALL** be calculated and adjusted in accordance with the methodologies and parameters in the ODCM to ensure that the alarm/trip will occur prior to exceeding the limits of 10CFR Part 20. The OPERABILITY and use of this instrumentation is consistent with the requirements of General Design Criteria 60, 63, and 64 of Appendix A to 10CFR Part 50.

D. Liquid Holdup Tanks

Restrictions on the quantity of radioactive liquid material contained in tanks are required only for temporary tanks. All exterior permanent tanks are diked to prevent release of their contents in the event of leakage. Restricting the quantity of radioactive material contained in the specified tanks provides assurance that in the event of an uncontrolled release of the tanks contents, the resulting concentrations would be less than the values given in Appendix B, Table 2, Column 2, to 10CFR20.1001-20.2402 at the nearest potable water supply and the nearest surface water supply in an unrestricted area.

Surveillance requirements for continuous liquid release points are not provided since all Monticello releases are "batch" type releases.

Radioactive liquid effluent instrumentation is provided to monitor and control, as applicable, the releases of radioactive materials in liquid effluents during actual or potential releases of liquid effluents. The alarm setpoints for these instruments will be calculated in accordance with NRC approved methods in the ODCM to ensure that the alarm will occur prior to exceeding the limits of 10CFR20. The operability requirements for instrumentation are consistent with the requirements of General Design Criteria 60, 63, and 64 of Appendix A to 10CFR Part 50.

Figure 1 Monticello Nuclear Generating Plant Site Boundary for Liquid Effluents

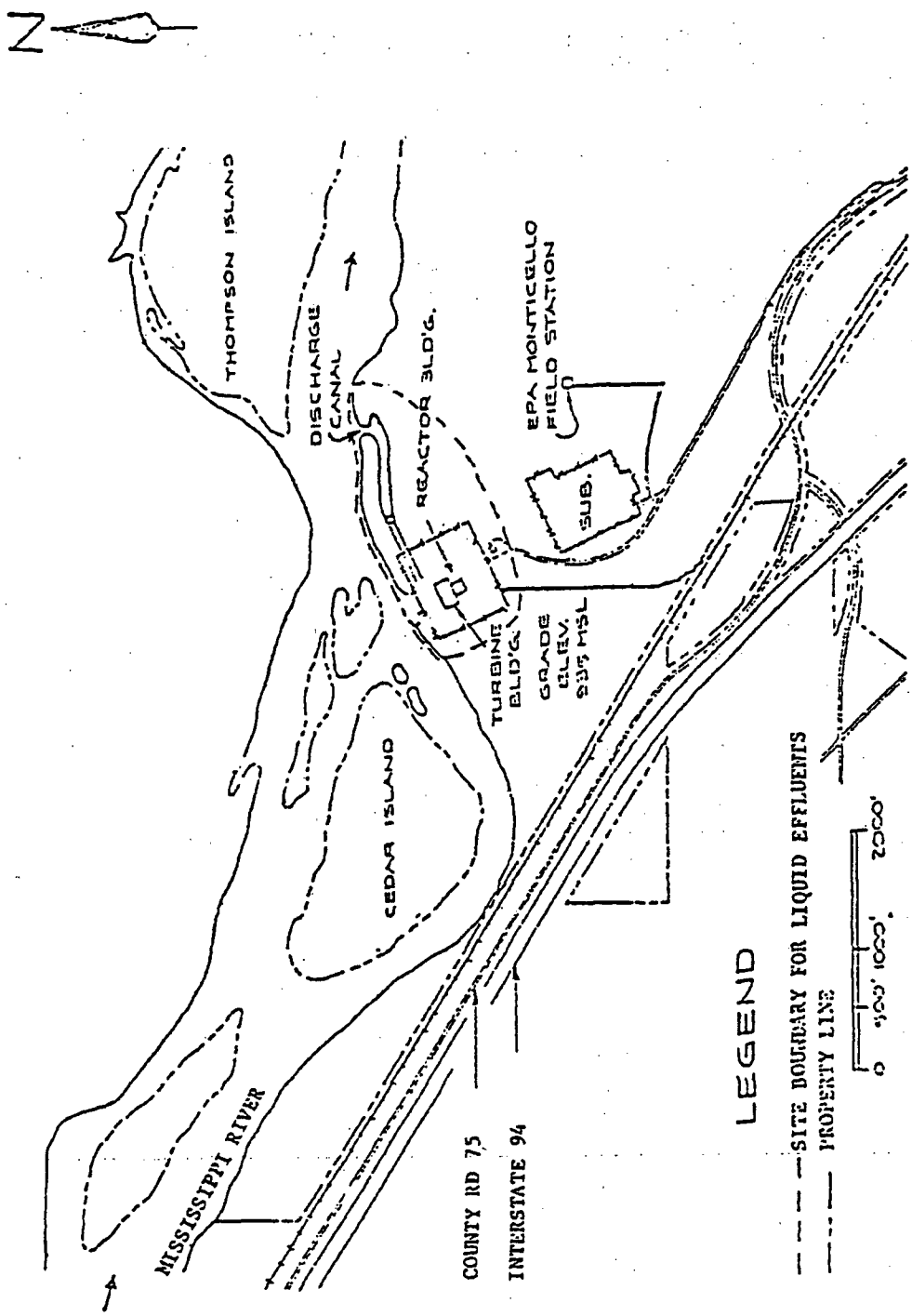

l/lcc

Table 1 Radioactive Liquid Effluent Monitoring Instrumentation Surveillance Requirements

Instrument	Sensor Check Frequency	Source Check Frequency	Functional Test Frequency	Calibration Frequency
Liquid Radwaste Effluent Line Gross Radioactivity Monitor	Daily during release	Immediately Prior to Each Release	Within 3 months prior to making a release	Within12 months prior to making a release.*
Liquid Radwaste Effluent Line Flow Instrument	Daily during release	-	Within 3 months prior to making a release	Within 12 months prior to making a release.
Instruments used in Determination of Discharge Canal Flow	Daily during release	-	Within 3 months prior to making a release	Within 18 months prior to making a release.
Service Water Discharge Pipe Gross Radioactivity Monitor	Daily	Monthly	Quarterly	Each Operating Cycle*
Discharge Canal Gross Radioactivity Monitor	Daily	Monthly	Quarterly	Each Operating Cycle **
Turbine Building Normal Drain Sump Monitor	Daily	Monthly	Quarterly	Each Operating Cycle
Level Monitors for Temporary Outdoor Tanks Holding Radioactive Liquid	Daily when in use	-	Quarterly when in use	Each Operating Cycle when in use

* - The initial Instrument Calibration ***SHALL*** be performed using one or more of the reference standards certified by the National Bureau of Standards (NBS) or using sources traceable to NBS standards. These standards ***SHALL*** permit calibrating the system over its intended range of energy and measurement range. For subsequent calibration sources that have been related to the initial calibration ***SHALL*** be used.

** - An initial Instrument Calibration was performed using a liquid reference standard over the systems intended range of energy and measurement range. Solid calibration sources traceable to NBS Standards currently being applied for instrument calibrations were related to the initial calibration. If, in the future, the canal radioactivity monitor is replaced, the following conditions ***SHALL*** apply:

a. Detector response and system efficiency ***SHALL*** be equal to or better than the present system.

b. Footnote (*) ***SHALL*** apply

Table 2 Radioactive Liquid Waste Sampling And Analysis Program

Liquid Release Type	Sampling Frequency	Minimum Analysis Frequency	Type of Activity Analysis	Lower Limit of Detection (LLD) (uci/ml)[a,e]
Batch Waste Release Tanks[b]	Each Batch	Each Batch	Principal Gamma Emitters[d]	5×10^{-7}
			I-131	1×10^{-6}
	One Batch Each Month	One Batch Each Month	Dissolved and Entrained Gases	1×10^{-5}
	Each Batch	Monthly Composite[c]	H-3	1×10^{-5}
			Gross alpha	1×10^{-7}
	Each Batch	Quarterly Composite[c]	Sr-89, Sr-90	5×10^{-8}
			Fe-55	1×10^{-6}

Table 2 Radioactive Liquid Waste Sampling And Analysis Program (cont'd)

Notes

a. The LLD is the smallest concentration of radioactive material in a sample that will be detected with 95% probability with 5% probability of falsely concluding that a blank observation represents a "real" signal.

For a particular measurement system (which may include radiochemical separation):

$$LLD = \frac{4.66\ s_b}{E \cdot V \cdot 2.22 \cdot Y \cdot \exp(-\lambda \Delta t)}$$

where:

LLD is the a priori lower limit of detection as defined above (as picocurie per unit mass or volume),

s_b is the standard deviation of the background counting rate or of the counting rate of a blank sample as appropriate (as counts per minute). Typical values of E, V, Y and Δt ***SHALL*** be used in the calculations.

E is the counting efficiency (as counts per transformation),

V is the sample size (in units of mass or volume),

2.22 is the number of transformations per minute per picocurie,

Y is the fractional radiochemical yield (when applicable),

λ is the radioactive decay constant for the particular radionuclide, and

Δt is the elapsed time between midpoint of sample collection and time of counting.

Table 2 Radioactive Liquid Waste Sampling And Analysis Program (cont'd)

b. A batch release is the discharge of liquid wastes of a discrete volume. Prior to sampling for analyses, each batch ***SHALL*** be isolated and then thoroughly mixed to assure representative sampling.

c. A composite sample is one in which the quantity of liquid sampled is proportional to the quantity of liquid waste discharged and in which the method of sampling employed results in a specimen which is representative of the liquids released.

d. The principle gamma emitters for which the LLD specification will apply are exclusively the following radionuclides: Mn-54, Fe-59, Co-58, Co-60, Zn-65, Mo-99, Cs-134, Cs-137, Ce-141, and Ce-144. This list does not mean that only these nuclides are to be detected and reported. Other peaks which are measurable and identifiable, together with the above nuclides, ***SHALL*** also be identified and reported.

e. Nuclides which are below the LLD for the analyses ***SHALL*** be reported as "less than" the LLD of the nuclide and should not be reported as being present at the LLD level for that nuclide. The "less than" values ***SHALL*** not be used in the required dose calculations. When unusual circumstances result in LLDs higher than required, the reasons ***SHALL*** be documented in the Radioactive Effluent Release Report.

Table 3 Radioactive Liquid Effluent Monitoring Instrumentation

Instrument	Minimum Channels Operable	Applicability	Action if Minimum Channels not operable
Liquid Radwaste Effluent Line Gross Radioactivity Monitor	1	During Release of Liquid Radwaste	Liquid radwaste releases may continue for up to 14 days provided that prior to initiating a release: a. At least two independent samples are analyzed in accordance with Table 2. b. At least two technically qualified members of the Facility Staff independently verify the release rate calculations and discharge line valving; Otherwise, suspend release of radioactive effluents via this pathway.
Liquid Radwaste Effluent Flow Instrument	1	During Release of Liquid Radwaste	Liquid radwaste releases via this pathway may continue for up to 30 days provided the flow rate is estimated at least every four hours during actual releases. Pump curves may be used to estimate flow.
Discharge Canal Flow Measurement: - Open Cycle Mode - Closed/Helper Cycle Mode	 1 1	During Release of Liquid Radwaste	Effluent releases via this pathway may continue for up to 30 days provided the flow rate is estimated at least once every four hours during actual releases. Pump curves may be used to estimate flow.
Discharge Canal Gross Radioactivity Monitor*	1	At all times	Effluent releases may continue for up to 30 days provided that at least once every 8 hours a grab sample ***SHALL*** be collected and analyzed for gross beta at an LLD of 10^{-7} µCi/ml or gamma isotopic for principle gamma emitters at an LLD of 5.0×10^{-7} µCi/ml.

* - Indicates monitor provided with automatic alarm.

Table 3 Radioactive Liquid Effluent Monitoring Instrumentation (cont'd)

Instrument	Minimum Channels Operable	Applicability	Action if Minimum Channels not operable
Service Water Discharge Pipe Gross Radioactivity Monitor*	1	At all times	Service water discharge may continue for up to 30 days provided that at least once every 8 hours a grab sample ***SHALL*** be collected and analyzed for gross beta at an LLD of 10^{-7} µCi/ml or gamma isotopic for principle gamma emitters at an LLD of 5.0×10^{-7} µCi/ml.
Turbine Building Normal Sump Monitor*	1	At all times	Liquid sump releases may continue for up to 30 days provided that at least once every 8 hours a grab sample ***SHALL*** be collected and analyzed for gross beta at an LLD of 10^{-7} µCi/ml or gamma isotopic for principle gamma emitters at an LLD of 5.0×10^{-7} µCi/ml.
Level Monitors for Temporary Outdoor Tanks Holding Radioactive Liquid	1	When tanks are in use	Liquid additions to a tank may continue for up to 30 days provided the tank level is estimated during all liquid additions.

* - Indicates monitor provided with automatic alarm.

OFFSITE DOSE CALCULATION MANUAL - TABLE OF CONTENTS

SECTION		PAGE
1.0	RECORD OF REVISION	2
2.0	GASEOUS EFFLUENTS	4
2.1	Dose Rate	4
2.2	Dose - Noble Gases	6
2.3	Dose - Iodine-131, Iodine-133, Tritium and Particulates	7
2.4	Off-gas Treatment System	8
2.5	Main Condenser Off-Gas Activity	9
2.6	Containment Venting and Purging	11
2.7	Bases	12
Figure 1	Monticello Nuclear Generating Plant Site Boundary for Gaseous Effluents	15
Table 1	Radioactive Gaseous Effluent Monitoring Instrumentation Surveillance Requirements	16
Table 2	Radioactive Gaseous Waste Sampling and Analysis Program	17
Table 3	Radioactive Gaseous Effluent Monitoring Instrumentation	19

Approval: PCR 01073724

I/cah

1.0 RECORD OF REVISION

Revision No.	Date	Reason for Revision
1	August - 1995	Page 3 of 23, 2nd paragraph - Changed "In addition, prior to containment purge and venting," to "In addition, prior to containment purging". This change was made because setpoint recalculation is required only for containment purging and to be consistent with the rest of the ODCM. Page 3 of 23, first paragraph - Changed "Reactor Building Vent Plenum Monitor which initiates isolation of Reactor Building releases" to "Reactor Building Vent Noble Gas Monitor". This change was made to differentiate the noble gas monitor from the plenum radiation monitor and because the isolation function has been removed from the noble gas monitor system. Page 3 of 23, section 1.1.1 - Changed "Reactor Building Vent Isolation Setpoint" to"Reactor Building Vent Alarm Setpoint". This change was made because the setpoint exceedance no longer causes the Reactor Building Vent to isolate. Page 4 of 23, Section 1.1.1.B - Changed "For purge releases, substitute (x/q)v, the highest short term dispersion factor from Table A-12" to "For purge releases, substitute the value obtained from Chemistry Manual Procedure I.06.07 (ATMOSPHERIC DISPERSION DETERMINATION). This change was made to more accurately predict off-site dose from containment purging by using near real time actual dispersion values.
2	October - 2000	Incorporated Radiological Effluents Tech Specs section 3.8.B and 4.8.B into document.
3	November - 2001	Added clarification to section 2.4.1.A. and 2.4.3.A. to more accurately describe Off-gas Treatment System operation requirements. Corrected reference in Note h. of Table 2.

Revision No.	Date	Reason for Revision
4	September - 2002	Revised Actions 2.2.3 and 2.3.3 to standardize documentation and reporting. Revised action in Table 3 to make inoperable air ejector off-gas radiation monitors consistent with high monitor readings action in T.S.3.8.A. Revised action in Table 3 to add compensatory sampling for inoperable hydrogen monitors similar to other inoperable monitors in Table 3.
5	January - 2004	Revised Control 2.4.1.A to make it consistent with Tech Spec 6.8.D.6. Revised Action 2.4.3.A to accommodate the revised Control (2.4.1.A).
6	October - 2004	Revised Control 2.6.1.A to make it consistent with Tech Spec 3.7.D.3.a. Deleted surveillance requirement 2.6.4.A to conform to T.S.3.7.D.3.a.
7	August - 2005	Incorporated changes made during the conversion of the Current Technical Specifications to the Improved Technical Specifications. This includes dual step annotation.
8	February - 2006	This change is being submitted per GAR 01012990. There are no additional changes to the procedures. This revision is being issued to allow PORC review of changes made in revision 7. Revision bars from revision 7 are maintained for review purposes.
9	January - 2007	Revised Control 2.6.1 and it's bases to allow the use of Standby Gas Treatment System during inerting and deinerting activities.

GENERAL NOTE: This procedure includes Improved Technical Specifications ([ITS]) information that is NOT applicable to Current Technical Specifications ([CTS]) and [CTS] information that will change when [ITS] is implemented. The [ITS] information *SHALL NOT* be used prior to the [ITS] effective date. On and after the [ITS] effective date, the [ITS] information *SHALL* be used in lieu of the corresponding [CTS] information.

2.0 GASEOUS EFFLUENTS

2.1 Dose Rate

2.1.1 Controls

A. **[CTS]** In accordance with T.S.6.8.D.7, the dose rate due to radioactive materials released in gaseous effluents from the site (Figure 1) ***SHALL*** be limited to the following:

[ITS] In accordance with Tech Spec 5.5.3.a, 5.5.3.c, and 5.5.3.g, the dose rate to radioactive materials released in gaseous effluents from the site (Figure 1) ***SHALL*** be limited to the following values:

1. For Noble Gases: Less than or equal to a dose rate of 500 mrem/yr to the total body and less than or equal to a dose rate of 3000 mrem/yr to the skin, and

2. For Iodine-131, Iodine-133, Tritium, and for all radionuclides in particulate form with half-lives greater than 8 days: Less than or equal to a dose rate of 1500 mrem/yr to any organ.

2.1.2 Applicability

At all times.

2.1.3 Action

A. With the dose rate(s) exceeding the above limits, immediately decrease the release rate to within acceptable limits(s).

B. Radioactive material in gaseous effluents released from the site ***SHALL*** be continuously monitored in accordance with Table 3.

C. The Noble Gas Effluent monitors having provisions for the automatic termination of gaseous releases, as listed in Table 3 ***SHALL*** be used to limit off–site dose rates to the values established in 2.1.1.A.1. Setpoints ***SHALL*** be determined in accordance with the ODCM.

2.1.4 Surveillance Requirements

A. Gaseous effluent monitoring instrument surveillance ***SHALL*** be performed as required by Table 1.

B. The release rate due to Iodine-131, Iodine-133, Tritium, and Radioactive Particulates with half-lives greater than 8 days ***SHALL*** be determined by obtaining representative samples and performing analysis in accordance with the sampling and analysis program specified in Table 2. Following each analysis, the dose rate due to I-131, I-133, Tritium and Radioactive Particulates with half-lives greater than 8 days, ***SHALL*** be determined to be less than the limit in 2.1.1.A.2. in accordance with the ODCM.

2.2 Dose - Noble Gases

2.2.1 Controls

A. **[CTS]** In accordance with T.S.6.8.D.8, the air dose due to noble gases released in gaseous effluents from the site (Figure 1) ***SHALL*** be limited to the following values:

[ITS] In accordance with Tech Spec 5.5.3.a, 5.5.3.c, 5.5.3.e and 5.5.3.h, the air dose due to noble gases released in gaseous effluents from the site (Figure 1) ***SHALL*** be limited to the following values:

1. During any calendar quarter: $\leq$5 mrad for gamma radiation and $\leq$10 mrad for beta radiation, and

2. During any calendar year: $\leq$10 mrad for gamma radiation and $\leq$20 mrad for beta radiation.

2.2.2 Applicability

At all times.

2.2.3 Action

A. With the calculated air dose from radioactive noble gases in gaseous effluent exceeding any of the above limits, document and report IAW ODCM-01.01, Section 2.4.1.C.

2.2.4 Surveillance Requirements

A. Cumulative dose contributions for the current calendar quarter and current calendar year from noble gases in gaseous effluents ***SHALL*** be determined monthly in accordance with the ODCM.

2.3 Dose - Iodine-131, Iodine-133, Tritium and Particulates

2.3.1 Controls

A. **[CTS]** In accordance with T.S.6.8.D.9, the dose to any organ of an individual due to Iodine-131, Iodine-133, Tritium, and radioactive particulates with a half-life greater than 8 days released from the site (FIGURE 1) in gaseous effluent **SHALL** be limited to the following:

[ITS] In accordance with Tech Spec 5.5.3.a, 5.5.3.c, and 5.5.3.i, the dose to any organ of an individual due to Iodine-131, Iodine-133, Tritium, and radioactive particulates with a half-life greater than 8 days released from the site (FIGURE 1) in gaseous effluent ***SHALL*** be limited to the following values:

1. During any calendar quarter: $\leq$7.5 mrem, and

2. During any calendar year: $\leq$15 mrem.

2.3.2 Applicability

At all times.

2.3.3 Action

A. With the calculated dose from the release of Iodine-131, Iodine-133, Tritium, and Radioactive Particulates with half-lives greater than 8 days, exceeding any of the above limits, document and report IAW ODCM-01.01, Section 2.4.1.C.

2.3.4 Surveillance Requirements

A. Cumulative dose contributions for the current calendar quarter and current calendar year for Iodine-131, Iodine-133, Tritium, and Radioactive Particulates with half-lives greater than 8 days in gaseous effluents ***SHALL*** be determined in accordance with the ODCM monthly.

2.4 Off-gas Treatment System

2.4.1 Controls

A. **[CTS]** In accordance with T.S.6.8.D.6, the OFF-GAS TREATMENT SYSTEM ***SHALL*** be in operation whenever the Main Condenser Air Ejector system is in operation. Components of the system ***SHALL*** be operated to provide the maximum holdup time obtainable except:

[ITS] In accordance with Tech Spec 5.5.3.a, 5.5.3.c, and 5.5.3.f, the OFF-GAS TREATMENT SYSTEM ***SHALL*** be in operation whenever the Main Condenser Air Ejector system in operation. Components of the system ***SHALL*** be operated to provide the maximum holdup time obtainable except:

1. During Plant Startup or Plant Shutdown.

2. During periods of off-gas treatment system equipment maintenance.

3. When off-gas recombiner outlet hydrogen or oxygen concentrations are out of specification.

4. When condenser air in-leakage exceeds off-gas storage compressor capacity.

B. **[CTS]** The quantity of radioactivity after 12 hours holdup contained in each gas storage tank ***SHALL*** be limited to $\leq$22,000 curies of noble gases (considered as dose equivalent Xe-133).

[ITS] In accordance with Tech Spec 5.5.7.b, the quantity of radioactivity after 12 hours holdup contained in each gas storage tank ***SHALL*** be limited to $\leq$22,000 curies of noble gases (considered as dose equivalent Xe-133).

C. **[CTS]** The concentration of hydrogen in the compressed storage subsystem ***SHALL*** be limited to $\leq$2% by volume. With the concentration of hydrogen $>$2% by volume, but $\leq$4% by volume, restore the concentration of hydrogen to $<$2% by volume within 48 hours or suspend operation of the compressed storage subsystem.

[ITS] In accordance with Tech Spec 5.5.7.a, the concentration of hydrogen in the compressed storage subsystem ***SHALL*** be limited to $\leq$2% by volume. With the concentration of hydrogen $>$2% by volume, but $\leq$4% by volume, restore the concentration of hydrogen to $<$2% by volume within 48 hours or suspend operation of the compressed storage subsystem.

D. The hydrogen monitors ***SHALL*** be operable as specified in Table 3 and set to automatically trip the off-gas compressors at ≤4% hydrogen by volume.

2.4.2 Applicability

At all times.

2.4.3 Action

A. With the Off-gas Treatment System outside the controls listed in 2.4.1.A. and gaseous waste being discharged for more than seven (7) days with an average holdup time of less than 50 hours, document and report IAW ODCM-01.01, Section 2.4.1.C.

2.4.4 Surveillance Requirements

A. **[CTS]** Following each isotopic analysis of a sample of gases from the Main Condenser Off-gas System Pretreatment monitor station required by Tech Spec 3.8.A, verify that the maximum storage tank activity limit specified in 2.4.1.B. cannot be exceeded using the method in the ODCM.

[ITS] Following each isotopic analysis of a sample of gases from the Main Condenser Off-gas System Pretreatment monitor station required by Tech Spec 3.7.6, verify that the maximum storage tank activity limit specified in 2.4.1.B cannot be exceeded using the method in the ODCM.

2.5 Main Condenser Off-Gas Activity

2.5.1 Controls

A. **[CTS]** In accordance with T.S.3.8.A.1, whenever the Steam Jet Air Ejectors (SJAEs) are in operation, the gross gamma activity rate of the noble gases measured at the Main Condenser Off-gas System Pretreatment Monitor station ***SHALL*** be $\leq 2.6 \times 10^5$ μCi/sec after a decay of 30 minutes.

[ITS] In accordance with Tech Spec 3.7.6, whenever the Steam Jet Air Ejectors (SJAEs) are in operation, the gross gamma activity rate of the noble gases measured at the Main Condenser Off-gas System Pretreatment Monitor station ***SHALL*** be ≤260 mCi/second after a decay of 30 minutes.

B. The activity of radioactive material in gaseous form removed from the main condenser ***SHALL*** be continuously monitored by the Main Condenser Off-Gas Pretreatment monitors in accordance with Table 3.

C. The Main Condenser Off-Gas Pretreatment monitors ***SHALL*** be set to automatically terminate off-gas flow within 30 minutes at the limit established in 2.5.1.A.

2.5.2 Applicability

At all times

2.5.3 Action

A. When the gross gamma activity rate of the noble gases is not within the limit of 2.5.1.A above, restore gross gamma activity rate of the noble gases to within the limit within 72 hours.

B. When 2.5.3.A cannot be met, either:

1. Isolate all main steam lines within 12 hours; or

2. Isolate the SJAEs within 12 hours; or

3. Be in hot shutdown within 12 hours and cold shutdown within the following 24 hours.

2.5.4 Surveillance Requirements

A. The gross gamma radioactivity of noble gases from the main condenser air ejector ***SHALL*** be determined to be within the limit specified in 2.5.1.A at the following times by performing an isotopic analysis of a representative sample of gases:

1. Once every month

2. Within 4 hours following an increase in the continuous monitor reading of 50% after factoring out increases due to power level.

2.6 Containment Venting and Purging

2.6.1 Controls

A. In accordance with Tech Spec 5.5.3.a, 5.5.3.c, 5.5.3.k, and 3.6.1.3, the inerting and deinerting operations permitted by Tech Spec 3.6.3.1 ***SHALL*** be via the 18-inch purge and vent valves (equipped with 40-degree limit stops). All other purging and venting, when primary containment OPERABILITY is required, ***SHALL*** be via the 2-inch purge and vent valve bypass line and the Standby Gas Treatment System.

B. In accordance with Tech Spec 5.5.3.a, 5.5.3.c, and 5.5.3.k, Containment inerting following startup and deinerting prior to shutdown should be via the Standby Gas Treatment System.

2.6.2 Applicability

At all times.

2.6.3 Action

None

2.6.4 Surveillance Requirements

A. Prior to containment purging, the sampling and analysis requirements of Table 2 ***SHALL*** be met.

2.7 Bases

2.7.1 Gaseous Effluents

A. Dose Rate

Control 2.1.1.A. provides reasonable assurance that radioactive material discharged in gaseous effluents will not result in the exposure of a Member of the Public in an Unrestricted Area, either at or beyond the Site Boundary in excess of the design objectives of Appendix I to 10CFR Part 50. This specification is provided to ensure that gaseous effluents from all units on the site will be appropriately controlled. It provides operational flexibility for releasing gaseous effluents to satisfy the Section II.A and II.C design objectives of Appendix I to 10CFR Part 50. For Members of the Public who may at times be within the Site Boundary, the occupancy of that Member of the Public will usually be sufficiently low to compensate for the reduced atmospheric dispersion of gaseous effluents relative to that for the Site Boundary. The specified release rate limits restrict, at all times, the corresponding dose rates above background to a Member of the Public at or beyond the Site Boundary to less than or equal to 500 mrem/year to the total body or to less than or equal to 3000 mrem/year to the skin. These release rate limits also restrict, at all times, the corresponding thyroid dose rate above background to a child via the inhalation pathway to less than or equal to 1500 mrem/year. This specification does not affect the requirement to comply with the annual limitations of 10CFR20.1301(a).

B. Dose From Noble Gas

Control 2.2.1.A. is provided to implement the requirements of Sections II.B, III.A and IV.A of Appendix I, 10CFR Part 50. Action required by Control 2.2.1 provides the required operating flexibility and at the same time implements the guides set forth in Section IV.A of Appendix I to assure that the releases of radioactive material in gaseous effluents will be kept "as low as reasonably achievable".

The Surveillance Requirements implement the requirements in Section III.A of Appendix I that conformance with the guides of Appendix I is to be shown by calculational procedures based on models and data such that the actual exposure of an individual through the appropriate pathways is unlikely to be substantially underestimated. The dose calculations established in the ODCM for calculating the doses due to the actual release rates of radioactive noble gases in gaseous effluents will be consistent with the methodology provided in Regulatory Guide 1.109, "Calculation of Annual Doses to Man from Routine Releases of Reactor Effluents for the Purpose of Evaluating Compliance with

10CFR Part 50, Appendix I," Revision 1, October 1977 and Regulatory Guide 1.111, "Methods for Estimating Atmospheric Transport and Dispersion of Gaseous Effluents in Routine Releases from Light-Water-Cooled Reactors," Revision 1, July 1977. The ODCM equations provided for determining the air doses at the restricted area boundary may be based upon the historical average atmospheric conditions. NUREG-0133, October, 1978 provides methods for dose calculations with Regulatory Guides 1.109 and 1.111.

C. Dose From Iodine 131, Iodine 133, Tritium & Particulates

Control 2.3.1.A. is provided to implement the requirements of Section II.C, III.A and IV.A of Appendix I, 10CFR Part 50. The release rate specifications for I-131, I-133, tritium and radioactive particulates with half-lives greater than eight days are dependent on the existing radionuclide pathways to man in the Unrestricted Area. The pathways which are examined in the development of these calculations are: 1) individual inhalation of airborne radionuclides, 2) deposition of radionuclides onto green leafy vegetation with subsequent consumption by man, 3) deposition onto grassy areas where milk animals and meat producing animals graze with consumption of the milk and meat by man, and 4) deposition on the ground with subsequent exposure of man.

D. Off-gas Treatment Systems

Control 2.4.1.A. provides assurance that appropriate portions of the Off-gas Treatment System be used when specified, and provides reasonable assurance that the releases of radioactive materials in gaseous effluents will be kept "as low as is reasonably achievable". This specification implements the requirements of 10CFR50.36a, General Design Criterion 60 of Appendix A to 10CFR Part 50, and design objective Section II.D of Appendix I to 10CFR Part 50. The specified limits governing the use of appropriate portions of the systems were specified as a suitable fraction of the guide set forth in Sections II.B and II.C of Appendix I, 10CFR Part 50, for gaseous effluents.

Control 2.4.1.B. is provided to limit the radioactivity which can be stored in one decay tank. Restricting the quantity of radioactivity contained in each gas storage tank provides assurance that in the event of an uncontrolled release of the tank's contents, the resulting total body exposure to an individual at the site Restricted Area Boundary will not exceed 20 mrem. A flow restrictor in the discharge line of the decay tanks prevents a tank from being discharged at an uncontrolled rate. In addition, interlocks prevent the contents of a tank from being released with less than 12 hours of holdup.

The radioactive gaseous effluent monitoring instrumentation is provided to monitor and control, as applicable, the releases of radioactive materials in gaseous effluents during actual or potential releases of gaseous effluents. The Alarm/Trip Setpoint for these instruments will be calculated in accordance with NRC approved methods in the ODCM to ensure that the alarm/trip will occur prior to exceeding the limits of 10CFR Part 20. The OPERABILITY requirements for this instrumentation are consistent with the requirements of General Design Criteria 60, 63, and 64 of Appendix A to 10CFR Part 50.

E. Main Condenser Off-Gas Activity

Control 2.5.1.A. establishes a maximum activity at the steam jet air ejector. Restricting the gross radioactivity rate of noble gases from the main condenser provides reasonable assurance that the total body exposure to an individual at the restricted area boundary will not exceed the limits of 10CFR Part 20 in the event this effluent is inadvertently discharged directly to the environment with minimal treatment. This control implements the requirements of General Design Criteria 60 and 64 of Appendix A to 10CFR Part 50.

F. Containment Venting and Purging

Control 2.6.1 requires the containment to be purged and vented through the Standby Gas Treatment System. This provides for iodine and particulate removal from the containment atmosphere. During outages when the containment is opened for maintenance, the containment ventilation exhaust is directed to the monitored Reactor Building vent. Use of the 2 inch flow path prevents damage to the Standby Gas Treatment System in the event of a loss of coolant accident during purging or venting.

Use of the Standby Gas Treatment System or Reactor Building Plenum and vent flow path for inerting and deinerting operations permits the Control Room Operators to monitor the activity level of the resulting effluent by use of the Offgas Stack or Reactor Building Vent Wide Range Gas Monitors. In the event that the Reactor Building release rate exceeds the Offgas Stack or Reactor Building Vent Wide Range Gas Monitor alarm settings, the monitors will alarm in the Control Room alerting the operators to take actions to limit the release of gaseous radioactive effluents. The alarm settings for the Offgas Stack or Reactor Building Vent Wide Range Gas Monitors are calculated in accordance with the NRC approved methods in the ODCM to ensure that alarms will alert Control Room Operators prior to the limits of 10CFR Part 20 being exceeded.

Figure 1. Monticello Nuclear Generating Plant Site Boundary for Gaseous Effluents

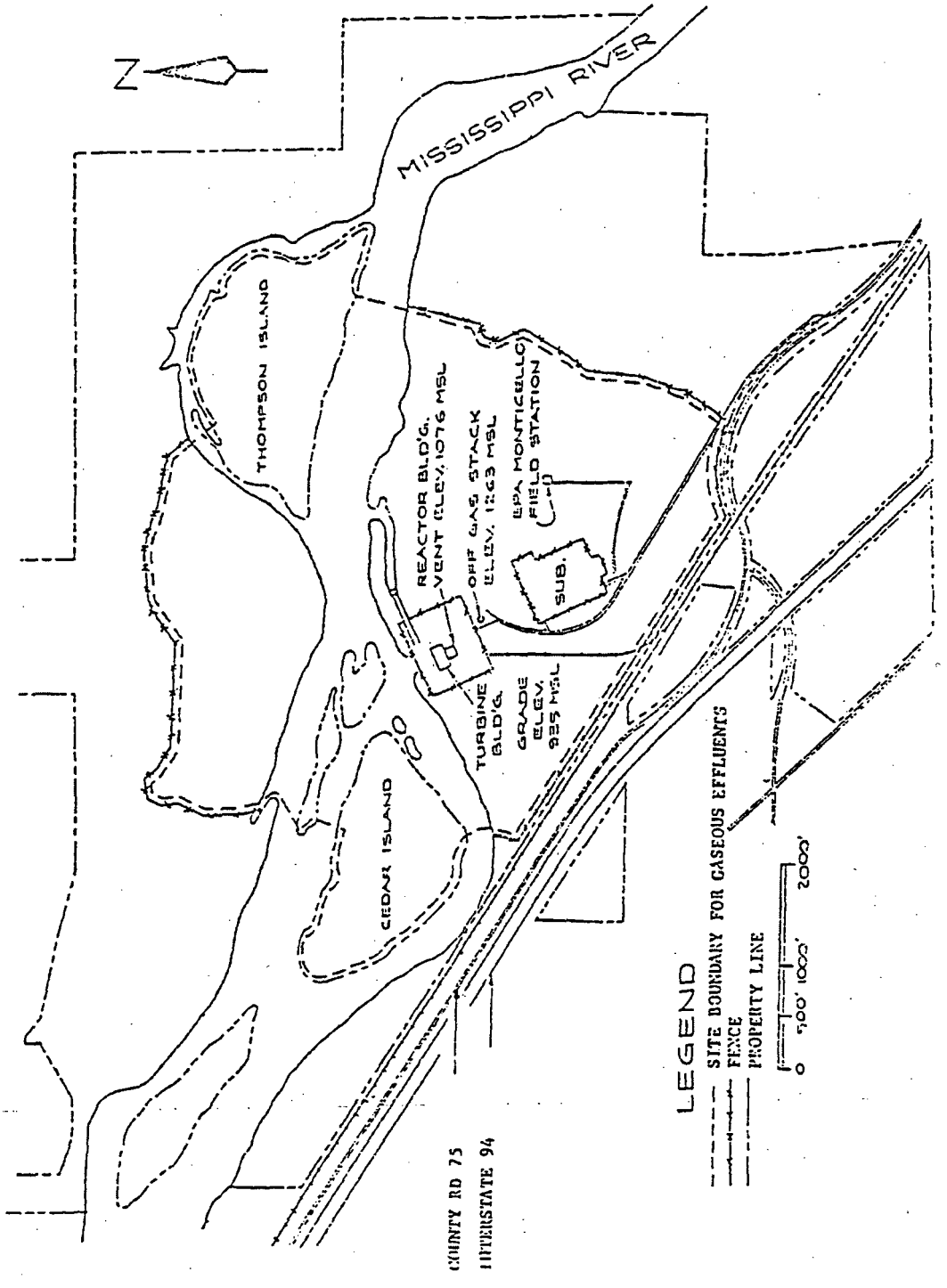

l/cah

Table 1 Radioactive Gaseous Effluent Monitoring Instrumentation Surveillance Requirements

Instrument	Sensor Check Frequency	Source Check Frequency	Functional Test Frequency	Calibration Frequency
Main Condenser Air Ejector Noble Gas Activity Monitors	Daily during air ejector operation		Quarterly	Once each Operating Cycle
Main Condenser Off-gas Treatment System Hydrogen Monitors	Daily during air ejector operation		Monthly	Quarterly#
Plant Stack Wide Range Noble Gas Activity Monitors	Daily	Monthly	Quarterly	Once each Operating Cycle*
Plant Stack Iodine and Particulate Samplers	Weekly			
Plant Stack Flow Monitor	Daily			Once each Operating Cycle
Plant Stack Sample Flow Instruments	Daily			Once each Operating Cycle
Reactor Building Vent Wide Range Noble Gas Activity Monitors	Daily	Monthly	Quarterly	Once each Operating Cycle*
Reactor Building Vent Iodine and Particulate Samplers	Weekly			
Reactor Building Vent Duct Flow Monitors	Daily			Once each Operating Cycle
Reactor Building Vent Sample Flow Instruments	Daily			Once each Operating Cycle

* - The initial Instrument Calibration ***SHALL*** be performed using one or more of the reference standards certified by the National Bureau of Standards (NBS) or using sources traceable to NBS standards. These standards ***SHALL*** permit calibrating the system over its intended range of energy and measurement range. For subsequent calibration sources that have been related to the initial calibration ***SHALL*** be used.

\# - The Calibration ***SHALL*** include the use of standard gas samples containing a nominal four volume percent hydrogen.

Table 2 Radioactive Gaseous Waste Sampling and Analysis Program

Gaseous Release Type	Sampling Frequency	Minimum Analysis Frequency	Type of Activity Analysis	Lower Limit of Detection (LLD) (uci/ml)[a,e,f]
Containment Purge	Each Purge Grab Sample	Each Purge	Principal Gamma Emitters(f)	1×10^{-4}
			H-3[h]	1×10^{-6}
Plant Stack and Reactor Building Vent	Monthly[b] Grab Sample	Monthly	Principal Gamma Emitters(f)	1×10^{-4}
			H-3[i]	1×10^{-6}
	Continuous[g]	Weekly[c] Charcoal Sample	I-131 I-133	1×10^{-12} 1×10^{-10}
	Continuous[g]	Weekly[c] Particulate Sample	Principal Gamma Emitters (I-131, Others)	1×10^{-11}
	Continuous[g]	Monthly[d] Composite Particulate Sample	Gross alpha	1×10^{-11}
	Continuous[g]	Quarterly[d] Composite Particulate Sample	Sr-89, Sr-90	1×10^{-11}
	Continuous[g]	Composite monitor	Gross gamma or gross beta noble gas activity	1×10^{-6}

Table 2 Radioactive Gaseous Waste Sampling and Analysis Program (cont'd)

Notes

a. The LLD is the smallest concentration of radioactive material in a sample that will be detected with 95% probability with 5% probability of falsely concluding that a blank observation represents a "real" signal. Note (a) of Table 2 is applicable.

b. Grab samples taken at the discharge of the plant stack and Reactor Building vent are generally below minimum detectable levels for most nuclides with existing analytical equipment. For this reason, isotopic analysis data, corrected for holdup time, for samples taken at the steam jet air ejector may be used to calculate noble gas ratios.

c. **[CTS]** Whenever the steady state radioiodine concentration is greater than 10 percent of the limit of Specification 3.6.C.1, daily sampling of reactor coolant for radioactive iodines of I-131 through I-135 is required. Whenever a change of 25% or more in calculated Dose Equivalent I-131 is detected under these conditions, the iodine and particulate collection devices for all release points ***SHALL*** be removed and analyzed daily until it is shown that a pattern exists which can be used to predict the release rate. Sampling may then revert to weekly. When samples collected for one day are analyzed, the corresponding LLDs may be increased by a factor of 10. Samples ***SHALL*** be analyzed within 48 hours after removal.

[ITS] Whenever the steady state radioiodine concentration is greater than 10 percent of the limit of Tech Spec 3.4.6, daily sampling of reactor coolant for radioactive iodines of I.131 through I.135 is required. Whenever a change of 25% or more in calculated Dose Equivalent I-131 is detected under these conditions, the iodine and particulate collection devices for all release points ***SHALL*** be removed and analyzed daily until it is shown that a pattern exists which can be used to predict the release rate. Sampling may then revert to weekly. When samples collected for one day are analyzed, the corresponding LLDs may be increased by a factor of 10. Samples ***SHALL*** be analyzed within 48 hours after removal.

d. To be representative of the average quantities and concentrations of radioactive materials in particulate form in gaseous effluents, samples should be collected in proportion to the rate of flow of the effluent streams.

e. The principal gamma emitters for which the LLD specification will apply are exclusively the following radionuclides: Kr-87, Kr-88, Xe-133, Xe-133m, Xe-135, and Xe-138 for gaseous emissions and Mn-54, Fe-59, Co-58, Co-60, Zn-65, Mo-99, Cs-134, Cs-137, Ce-141, and Ce-144 for particulate emissions. This list does not mean that only these nuclides are to be detected and reported. Other peaks which are measurable and identifiable, together with the above nuclides, ***SHALL*** also be identified and reported.

f. Nuclides which are below the LLD for the analyses ***SHALL*** be reported as "less than" the LLD of the nuclide and should not be reported as being present at the LLD level for that nuclide. The "less than" values ***SHALL NOT*** be used in the required dose calculations. When unusual circumstances result in LLDs higher than reported, the reasons ***SHALL*** be documented in the semiannual effluent report.

g. The ratio of the sample flow rate to the sampled stream flow rate ***SHALL*** be known for the time period sampled.

h. H^3 analysis ***SHALL*** not be required prior to purging if the limits of control 2.1.1 are satisfied for other nuclides. However, the H^3 analysis ***SHALL*** be completed within 24 hours after sampling.

i. In lieu of grab samples, continuous monitoring with bi-weekly analysis using silica-gel samplers may be provided.

Table 3 Radioactive Gaseous Effluent Monitoring Instrumentation

Instrument	Minimum Channels Operable	Applicability	Action if Minimum Channels not Operable
Main Condenser Air Ejector Noble Gas Activity Monitor	2	During air ejector operation	From and after the date that one of the two steam jet air ejector off-gas radiation monitors is made or found to be inoperable, continued reactor power operation is permissible provided the inoperable radiation monitor instrument channel is tripped. Upon loss of both steam jet air ejector off-gas radiation monitors, power operation is permissable up to 72 hours provided the off-gas treatment system and post-treatment monitors are operable. If an air ejector off-gas radiation monitor is not restored to service within 72 hours, either: Isolate all main steam lines within 12 hours; or Isolate the Steam Jet Air Ejectors within 12 hours; or Be in hot shutdown within 12 hours and cold shutdown within the following 24 hours.
Main Condenser Off-gas Treatment System Hydrogen Monitors	2#	During air ejector operation	Operation may continue for up to 14 days with one Operable channel per operating recombiner train. With all channels inoperable, operation may continue provided the compressed gas storage system is bypassed.
Plant Stack			
Wide Range Noble Gas Activity Monitors*	1	At all times	Releases via this pathway may continue for up to 30 days provided grab samples are taken and analyzed at least once every 8 hours.
Iodine Sampler Cartridge	1	At all times	Releases via this pathway may continue for up to 30 days provided within 8 hours samples are continuously collected with auxiliary sampling equipment as required by Table

Table 3 Radioactive Gaseous Effluent Monitoring Instrumentation (cont'd)

Instrument	Minimum Channels Operable	Applicability	Action if Minimum Channels not Operable
Particulate Sampler Filter	1	At all times	Releases via this pathway may continue for up to 30 days provided within 8 hours samples are continuously collected with auxiliary sampling equipment as required by Table 2.
Stack Flow Monitor	1	At all times	Releases via the pathway may continue for up to 30 days provided the flow rate is estimated at least once every 4 hours.
Sample Flow Instrument	1	At all times	Releases via the pathway may continue for up to 30 days provided the flow rate is estimated at least once every 4 hours.
Reactor Building Vent (includes Turbine Building & Radwaste Building releases) Wide Range Noble Gas Activity Monitors**	1	At all times	Releases via this pathway may continue for up to 30 days provided grab samples are taken and analyzed at least every 8 hours.
Iodine Sampler Cartridge	1	At all times	Releases via this pathway may continue for up to 30 days provided within 8 hours samples are continuously collected with auxiliary sampling equipment as required by Table 2.
Particulate Sampler Cartridge	1	At all times	Releases via this pathway may continue for up to 30 days provided within 8 hours samples are continuously collected with auxiliary sampling equipment as required by Table 2.
Duct Flow Monitors	1	At all times	Releases via the pathway may continue for up to 30 days provided the flow rate is estimated at least once every 4 hours.
Sample Flow Instruments	1	At all times	Releases via the pathway may continue for up to 30 days provided the flow rate is estimated at least once every 4 hours.

Notes:
- Indicates number of channels required per operating recombiner train.
* - Provides automatic termination of off-gas treatement system releases.
** - Provides Control Room indication prior to exceeding 10CFR Part 20 release limits.

l/cah

OFFSITE DOSE CALCULATION MANUAL - TABLE OF CONTENTS

SECTION		PAGE
1.0	RECORD OF REVISION	2
2.0	LIQUID EFFLUENT CALCULATIONS	3
2.1	Monitor Alarm Setpoint Determination	3
2.2	Liquid Effluent Concentration - Compliance With 10CFR20	11
2.3	Liquid Effluent Doses - Compliance With 10CFR50	12
2.4	References	15
Figure 1	Radwaste Clean, Dirty, Solid Waste	16
Table 1	Liquid Source Terms	17
Table 2	Aij Values for the Monticello Nuclear Generating Plant (mrem/hr per mCi/ml)	18

Prepared By:	
Reviewed By:	
OC Final Review Meeting:	Date:
Approved By Plant Manager:	Date:

FOR ADMINISTRATIVE USE ONLY			
3087 (DOCUMENT CHANGE, HOLD, AND COMMENT FORM) incorporated:_____			
Resp Supv: CHEM	Assoc Ref: CHEM-I	SR: N	Freq: 2 yrs
ARMS: ODCM-04.01	Doc Type: 7030	Admin Initials:	Date:

l/plr

1.0 RECORD OF REVISION

Revision No.	Date	Reason for Revision
1	October - 2000	Moved previous ODCM-02.01 (LIQUID EFFLUENTS) into this section and renamed this section "LIQUID EFFLUENTS CALCULATIONS" to facilitate moving the Radiological Effluents Tech Specs to the ODCM. Removed dilution flow from setpoint calculations for the Service Water and Turbine Normal Drain Monitors to ensure the setpoints are valid for all plant modes. Revised the Table 1 MPC_i values to 10 times the concentration values of 10CFR20.1001-20.2402, Table 2, Column 2.
2	November - 2001	Added clarification of use of computer program LIQDOS to section 2.0. Changed Turbine Building Normal Drain Sump to Turbine Building Normal Waste Sump.

2.0 LIQUID EFFLUENT CALCULATIONS

It is MNGP's policy to make no routine liquid releases, this section is used to:

A. Determine alarm setpoints for liquid monitors;

B. Determine that liquid concentrations in effluents are below 10 times the allowable concentrations given in 10CFR20;

C. Calculate dose commitments to individuals; and

D. Project doses for the next month due to liquid radioactive effluents.

E. Enter and compute liquid effluent doses using the LIQDOS Program if liquid effluent releases are made.

2.1 Monitor Alarm Setpoint Determination

Monitor alarm setpoints are determined to assure compliance with Tech Specs. The setpoints indicate if the concentration of radionuclides in the liquid effluent at the site boundary exceeds 10 times the concentrations specified in Appendix B, Table 2, Column 2 of 10CFR20.1001-20.2402 for radionuclides other than dissolved or entrained noble gases. The setpoints will also assure that a concentration of 2×10^{-4} µCi/ml for dissolved or entrained noble gases is not exceeded.

Monitor alarm setpoints are calculated monthly. The calculation is performed by the LIQDOS computer program. The calculation is based on radionuclides detected in effluent from the release point during the previous month in the following manner:

A. If there were no detectable radionuclides during the previous month, the BWR GALE Code source terms (Table 1)[2] will be used as the basis for the monthly release rate.

B. If the calculated setpoint is less than the existing monitor setpoint, the setpoint will be reduced to the new lower value.

C. If the calculated setpoint is greater than the existing monitor setpoint, the setpoint may remain at the lower value or be increased to the new value.

2.1.1 Radwaste Discharge Line Monitor

The following method applies to liquid releases from the plant via the discharge canal when determining the high-high alarm setpoint for the Liquid Radwaste Effluent Monitor during all operational conditions. The radwaste discharge flowrate is assumed to be maintained relatively constant at or near the maximum Liquid Radwaste Pump design flowrate. Circulating water is used for dilution because the setpoint is applied at the liquid effluent site boundary (ODCM-02.01, Figure 1).

A. Determine the "mix" (radionuclides and composition) of the liquid effluent.

1. Determine the liquid source terms that are representative of the "mix" of the liquid effluent. Liquid source terms are the total curies of each isotope released during the previous month. Table 1 source terms may be used if there have been no liquid releases.

2. Determine S_i (the fraction of the total radioactivity in the liquid effluent comprised by radionuclide i) for each individual radionuclide in the liquid effluent.

$$S_i = \frac{A_i}{\sum_i A_i} \qquad 2.1\text{-}1$$

where

A_i = The radioactivity of radionuclide i in the liquid effluent from Table 1.

B. Determine C_t, the maximum acceptable total radioactivity concentration of all radionuclides in the liquid effluent prior to dilution (µCi/ml).

$$C_t = \frac{F}{f \sum_i \frac{S_i}{MPC_i}} \qquad 2.1\text{-}2$$

where

F = Dilution water flowrate (gpm):

= Current circulating water flowrate or 240,000 gpm from two circulating water pumps, whichever is less.

f = The maximum acceptable discharge flowrate prior to dilution (gpm);

= 50 gpm from the Liquid Radwaste Pump [3];

and

MPC_i = The liquid effluent radioactivity concentration limit for radionuclide i (μCi/ml) from Table 1.

C. Determine C_m, the maximum acceptable total radioactivity concentration of the radionuclides (minus tritium) in the liquid discharge prior to dilution (μCi/ml).

$$C_m = C_t - (C_t S_H) \qquad 2.1\text{-}3$$

where

S_H = The fraction of the total radioactivity in the liquid effluent comprised of tritium and other radionuclides that do not emit gamma or x ray radiation.

D. Determine C.R., the calculated monitor count rate above background attributed to the radionuclides (ncps).

$$C.R. = \frac{C_m}{E} \qquad 2.1\text{-}4$$

where

E = The detection efficiency of the monitor (μCi/cc/cps) from Plant Chemistry Surveillance procedures.

E. The monitor high-high alarm setpoint above background (ncps) should be set at or less than the C.R. value. Since only one tank can be released at a time, adjustment of this value is not necessary to compensate for releases from more than one source.

2.1.2 Discharge Canal Monitor

The following method determines the high-high alarm setpoint for the Discharge Canal Monitor during all operational conditions.

A. Determine the "mix" (radionuclides and composition) of all liquids released into the discharge canal.

1. Determine the liquid source terms that are representative of the "mix" of all liquid released into discharge canal. Liquid source terms are the total curies of each isotope released during the previous month. Table 1 source terms may be used if there have been no liquid releases.

2. Determine S_i, the fraction of the total radioactivity of all liquids released into the discharge canal comprised by radionuclide i for each individual radionuclide released into the discharge canal.

$$S_i = \frac{A_i}{\Sigma A_i} \qquad 2.1\text{-}5$$

where

A_i = The radioactivity of radionuclide i released into the discharge canal.

B. Determine C_d, the maximum acceptable total radioactivity concentration of all radionuclides released into the discharge canal (µCi/ml).

$$C_d = \frac{1}{\sum_i \frac{S_i}{MPC_i}} \qquad 2.1\text{-}6$$

where

MPC_i = The liquid effluent radioactivity concentration limit for radionuclide i (µCi/ml) from Table 1.

C. Determine C_m, the maximum acceptable total radioactivity concentration of the radionuclides (minus tritium) released into the discharge canal (µCi/ml).

$$C_m = C_d - (C_d S_H) \qquad 2.1\text{-}7$$

where

S_H = The fraction of the total radioactivity released into the discharge canal comprised of tritium and other radionuclides that do not emit gamma or x-ray radiation.

D. Determine C.R., the calculated monitor count rate above background attributed to the radionuclides (ncps).

$$C.R. = \frac{C_m}{E} \qquad 2.1\text{-}8$$

where

E = The detection efficiency of the monitor (µCi/cc/cps) from Plant Chemistry Surveillance procedures.

E. The monitor high-high alarm setpoint above background (ncps) should be set at or less than the C.R. value.

2.1.3 Service Water Discharge Pipe Monitor

Dilution flow is not used for the service water discharge pipe monitor setpoint determination to ensure the setpoint is valid for all modes of plant operation. The following method determines the high-high alarm setpoint for the Service Water Discharge Pipe Monitor during all operational conditions.

A. Determine the "mix" (radionuclides and composition) of the service water effluent.

1. Determine the liquid source terms that are representative of the "mix" of the service water effluent. Liquid source terms are the total curies of each isotope released during the previous month. Table 1 source terms may be used if there have been no liquid releases.

2. Determine S_i the fraction of the total radioactivity in the service water effluent comprised by radionuclide i, for each individual radionuclide in the liquid effluent.

$$S_i = \frac{A_i}{\sum_i A_i} \qquad 2.1\text{-}9$$

where

A_i = The radioactivity of radionuclide i in the service water effluent.

B. Determine C_t, the maximum acceptable total radioactivity concentration of all radionuclides in the service water effluent prior to dilution (μCi/ml).

$$C_t = \frac{1}{\sum_i \frac{S_i}{MPC_i}} \qquad 2.1\text{-}10$$

where

MPC_i = The liquid effluent radioactivity concentration limit for radionuclide i (μCi/ml) from Table 1.

C. Determine C_m, the maximum acceptable total radioactivity concentration of the radionuclides (minus tritium) in the service water prior to dilution (μCi/ml).

$$C_m = C_t - (C_t S_H) \qquad 2.1\text{-}11$$

where

S_H = The fraction of the total radioactivity in the service water effluent comprised of tritium and other radionuclides that do not emit gamma or x-ray radiation.

D. Determine C.R., (the calculated monitor count rate above background attributed to the radionuclides (ncps)).

$$C.R. = \frac{C_m}{E} \qquad 2.1\text{-}12$$

where

E = The detection efficiency of the monitor (μCi/cc/cps) from Plant Chemistry Surveillance procedures.

E. The monitor high-high alarm setpoint above background (ncps) should be set at or less than the C.R. value.

2.1.4 Turbine Building Normal Waste Sump Monitor

Dilution flow is not used for the Turbine Building Normal Waste Sump Monitor setpoint determination to ensure the setpoint is valid for all modes of plant operation. The following method determines the high-high alarm setpoint for the Turbine Building Normal Waste Sump Monitor during all operational conditions.

A. Determine the "mix" (radionuclides and composition) of the TBNWS effluent.

1. Determine the liquid source terms that are representative of the "mix" of the TBNWS effluent. Liquid source terms are the total curies of each isotope released during the previous month. Table 1 source terms may be used if there have been no liquid releases.

2. Determine S_i, the fraction of the total radioactivity in the TBNWS effluent comprised by radionuclide i, for each individual radionuclide in the liquid effluent.

$$S_i = \frac{A_i}{\sum_i A_i} \qquad 2.1\text{-}13$$

where

A_i = The radioactivity of radionuclide i in the TBNWS effluent.

B. Determine C_t, the maximum acceptable total radioactivity concentration of all radionuclides in the TBNWS effluent prior to dilution (μCi/ml).

$$C_t = \frac{1}{\sum_i \frac{S_i}{MPC_i}} \qquad 2.1\text{-}14$$

MPC_i = The liquid effluent radioactivity concentration limit for radionuclide i (μCi/ml) from Table 1.

C. Determine C_m, the maximum acceptable total radioactivity concentration of the radionuclides (minus tritium) in the TBNWS prior to dilution (μCi/ml).

$$C_m = C_t - (C_t S_H) \qquad 2.1\text{-}15$$

where

S_H = The fraction of the total radioactivity in the TBNWS effluent comprised of tritium and other radionuclides that do not emit gamma or x-ray radiation.

D. Determine C.R., the calculated monitor count rate above background attributed to the radionuclides (ncps).

$$C.R. = \frac{C_m}{E} \qquad 2.1\text{-}16$$

where

E = The detection efficiency of the monitor (μCi/cc/cps) from Plant Chemistry Surveillance procedures.

E. The monitor high-high alarm setpoint above background (ncps) should be set at or less than the C.R. value.

2.1.5 Multiple Release Points

The discharge canal monitor, service water discharge and TBNWS line monitor are provided to detect unplanned or accidental releases. All normal releases are monitored by the radwaste discharge line monitor. There are, therefore, no multiple release points and monitor settings do not have to be reduced to account for multiple releases.

2.2 Liquid Effluent Concentration - Compliance With 10CFR20

In order to demonstrate compliance with 10CFR20, the concentrations of radionuclides in liquid effluents are determined and compared to 10 times the concentrations specified in Appendix B, Table 2, Column 2 to 10CFR20.1001-20.2402. The concentration of radioactivity in effluents prior to dilution is determined. The concentration in diluted effluent is calculated by the LIQDOS computer program.

2.2.1 Batch Releases

A. Prerelease

The radioactivity content of each batch release is determined prior to release. MNGP will show compliance with Tech Specs (TS) in the following manner:

The concentration of the various radionuclides in the batch release prior to dilution flow to obtain the concentration at the unrestricted area. This calculation is shown in the following equation:

$$Conc_i = \frac{C_i R}{MDF} \qquad 2.2\text{-}1$$

where

$Conc_i$ = concentration of radionuclide i at the unrestricted area, (μCi/ml);

C_i = concentration of radionuclide i in the potential batch release, (μCi/ml);

R = release rate of the batch, (gpm);

MDF = minimum dilution flow, (gpm).

The projected concentration in the unrestricted area is compared to 10 times the concentrations specified in Appendix B, Table 2, Column 2 to 10CFR20.1001-20.2402. These concentrations are given in Table 1. Before a release may occur, Equation 2.2-2 must be met for all nuclides. For the MNGP the MDF is 240,000 gpm. The maximum release rate is 50 gpm.

$$\sum_i \frac{Conc_i}{MPC_i} \leq 1 \qquad 2.2\text{-}2$$

where

MPC_i = maximum concentration of radionuclide i from Table 1, (μCi/ml).

2.3 Liquid Effluent Doses - Compliance With 10CFR50

Doses resulting from liquid effluents are calculated monthly to show compliance with 10CFR 50. These calculations are performed by the LIQDOS computer program. A cumulative summation of total body and organ doses for each calendar quarter and calender year is maintained as well as projected doses for the next month.

2.3.1 Determination of Liquid Effluent Dilution

To determine doses from liquid effluents the near field average dilution factor for the period of release must be calculated. This dilution factor must be calculated for each bath release. The dilution factor is determined by:

$$F_k = \frac{R_k}{X\ ADF_k} \qquad 2.3\text{-}1$$

where

R_k = release rate of the batch during time period k, (gpm);

and

ADF_k = actual dilution flow during the time period of release k, (gpm).

The value of X is the site specific value for the mixing effect of the MNGP discharge structure. This value is 1.0 for MNGP while operating in the once-through cooling mode. Although not expected to occur, if radioactive material is discharged while operating in the recycle mode, this value may be 1.86. [4]

2.3.2 Dose Calculations

The dose contribution from the release of liquid effluents is calculated monthly. The dose contribution is calculated using the following equation:

$$D_j = \sum_k \sum_i A_{ij} t_k C_{ik} F_k \qquad 2.3\text{–}2$$

where

D_j = the dose commitment to the total body or any organ, from the liquid effluents for the 31 day period, (mrem);

C_{ik} = the average concentration of radionuclide, i, in undiluted liquid effluent for release k, (μCi/ml);

A_{ij} = the site related ingestion dose commitment factor to the total body or any organ j for each identified principal gamma and beta emitter, (mrem/hr per µCi/ml);

F_k = the near field average dilution factor for C_{ik} during liquid effluent release k, as defined in Equation 2.3-1, and

t_k = the length of time for release k, (hours).

The dose factor A_{ij} was calculated for an adult for each isotope using the following equation:

$$A_{ij} = 1.14 \times 10^5 \, (730/D_w + 21BF_i) \, DF_{ij} \qquad 2.3\text{–}3$$

where

$$1.14 \times 10^5 = \frac{10^6 pCi}{\mu Ci} \quad \frac{10^3 ml}{liter} \quad \frac{1\ yr}{8760\ hr}$$

730 = adult water consumption rate, (liters/yr);

D_w = dilution factor from the near field area to the potable water intake for adult water consumption;

21 = adult fish consumption, (kg/yr);

BF_i = bioaccumulation factor for radionuclide i in fish from Table A-1 of Regulatory Guide 1.109 Rev. 1, [5] (pCi/kg per pCi/liter);

DF_{ij} = dose conversion factor for radionuclide i for adults for particular organ j from Table E-11 of Regulatory Guide 1.109 Rev. 1, (mrem/pCi).

The A_{ij} values for an adult at the MNGP are given in Table 2. The far field dilution factor, D_w for the MNGP is 7:1 for the nearest downstream water supply in St. Paul. This value was determined by assuming that effluents are completely mixed in 50% of the Mississippi River flow (7431 cfs at Anoka, MN). [6]

2.3.3 Cumulation of Doses

Doses calculated monthly are summed for comparison with quarterly and annual limits. The monthly results should be added to the doses cumulated from the other months in the quarter of interest and in the year of interest. This summation is performed by the LIQDOS computer program.

For the quarter:

$D \leq 1.5$ mrem total body 2.3-4

$D \leq 5$ mrem any organ 2.3-5

For the Calendar Year,

$D \leq 3$ mrem total body 2.3-6

$D \leq 10$ mrem any organ 2.3-7

The quarterly limits given above represent one half of the annual design objective.[7] If these quarterly or annual limits are exceeded, a special report should be submitted stating the reason and corrective action to be taken. This report will include results of analysis of Mississippi River water and an analysis of possible impacts through the drinking water pathway. If twice these limits are exceeded, a special report will be submitted showing compliance with 40CFR190.[8]

2.3.4 Projection of Doses

Anticipated doses resulting from the release of liquid effluents are projected monthly. If the projected doses for the month exceed 2% of Equation 2.3-6 or 2.3-7, additional components of the liquid radwaste treatment system will be used to process waste. The projected doses are calculated using Equation 2.3-2. This calculation is performed by the LIQDOS computer program. The dilution factor, F_k, is calculated by replacing the term ADF_k in Equation 2.3-1 with the term MDF from Equation 2.2-1.

The total source term utilized for the most recent dose calculation should be used for the projections unless information exists indicating that actual releases could differ significantly in the next month. In this case, the source term would be adjusted to reflect this information and the justification for the adjustment noted. This adjustment should account for any radwaste equipment which was operated during the previous month that could be out of service in the coming month.

2.4 References

1. USNRC, Title 10, Code of Federal Regulation, Part 20.1001-20.2402, "Standards for Protection Against Radiation", Appendix B, Table II, Column 2.

2. NSP - Monticello Nuclear Generating Plant, Appendix I Analysis - Supplement No. 1 - Docket No. 50-263, Table 2.1-2.

3. NSP - Monticello Nuclear Generating Plant, Appendix I Analysis - Supplement No. 1 - docket No. 50-263, Table 2.1-1.

4. Boegli, J.S., et. al. Eds, Section 4.3 in "Preparation of Radiological Effluent Technical Specifications for Nuclear Power Plants, NUREG-0133, 1978, NTIS, Springfield, VA.

5. USNRC, Regulatory Guide 1.109. "Calculation of Annual Doses to Man from Routine Releases of Reactor Effluents for the Purpose of Evaluating Compliance with 10CFR50, Appendix I", Rev. 1, Oct. 1977, USNRC, Washington, DC.

6. NSP - Monticello Nuclear Generating Plant, Final Draft Safety Analysis Report - Amendment 4, Question 3.3, and Amendment 8 in entirety.

7. USNRC, Title 10, Code of Federal Regulation, Part 50, "Domestic Licensing of Production and Utilization Facilities", Appendix I, "Numerical Guides for Design Objectives and Limiting Conditions for Operation to Meet the Criterion As Low as is Reasonably Achievable for Radioactive Material in Light-Water-Cooled Nuclear Power Reactor Effluents".

8. EPA, Title 40, Code of Federal Regulations, Part 190 "Environmental Radiation Protection Standards for Nuclear Power Operations".

Figure 1 Radwaste Clean, Dirty, Solid Waste

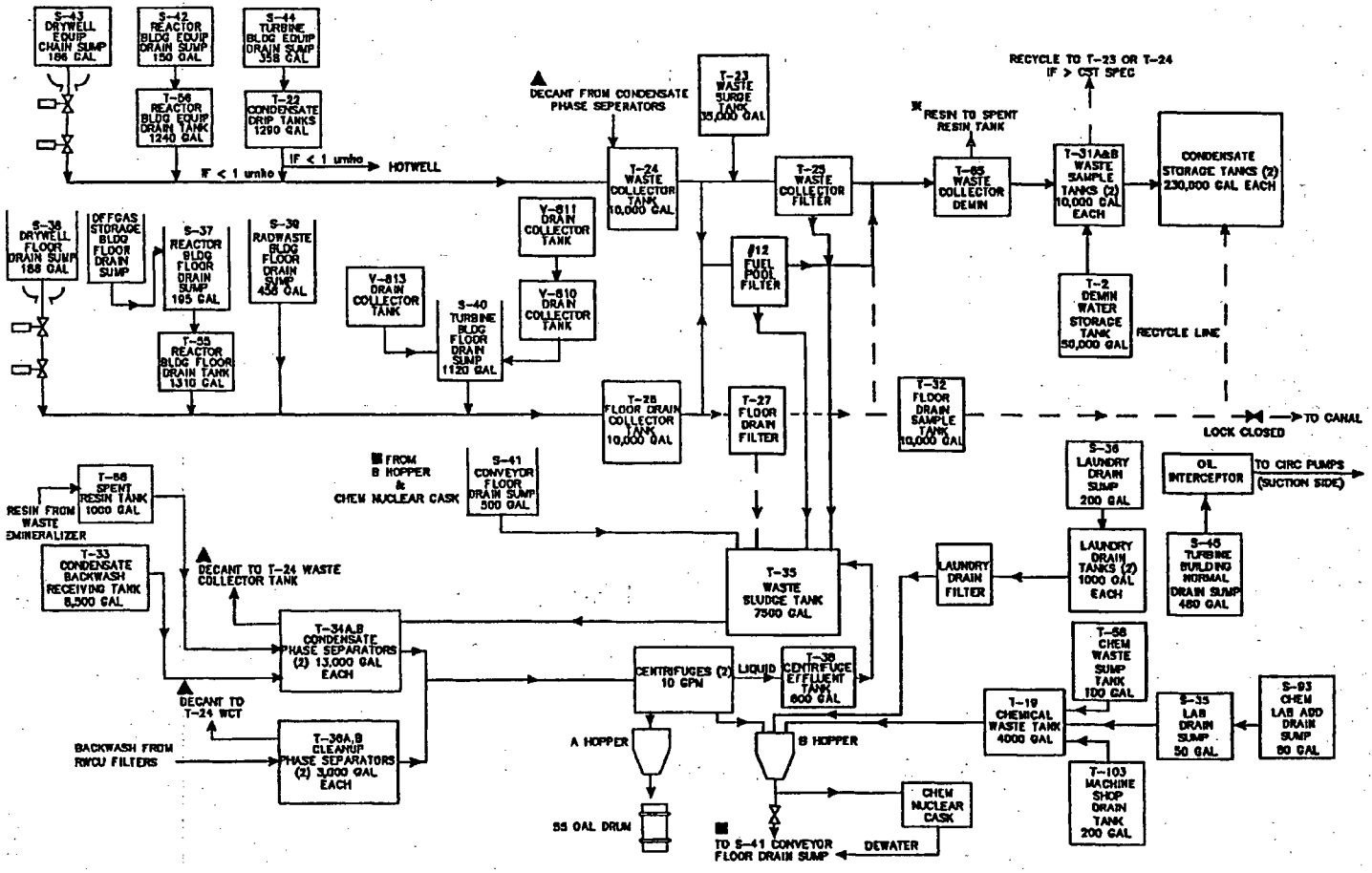

Table 1 Liquid Source Terms

Radionuclide	Radioactivity A_i Ci/yr*	MPC_i µCi/ml**
H-3	2.1E 1	1E-2
Na-24	1.7E-1	5E-4
Mn-54	2.6E-3	3E-4
Mn-56	2.7E-1	7E-4
Fe-59	8.1E-4	1E-4
Co-58	9.3E-3	2E-4
Co-60	2.0E-2	3E-5
Cu-64	5.4E-1	2E-3
Zn-65	5.3E-3	5E-5
Zn-69m	3.7E-2	6E-4
Br-83	1.4E-2	9E-3
Sr-89	2.8E-3	8E-5
Sr-90	1.7E-4	5E-6
Sr-91	6.4E-2	2E-4
Sr-92	5.8E-2	4E-4
Y-92	1.0E-1	4E-4
Y-93	6.6E-2	2E-4
Mo-99	5.0E-2	2E-4
I-131	1.3E-1	1E-5
I-132	1.3E-1	1E-3
I-133	4.0E-1	7E-5
I-134	6.4E-2	4E-3
I-135	2.5E-1	3E-4
Cs-134	8.3E-2	9E-6
Cs-136	2.6E-2	6E-5
Cs-137	1.2E-1	1E-5
Cs-138	1.5E-1	4E-3
Ba-140	1.1E-2	8E-5
La-141	5.7E-3	5E-4
Ce-141	8.5E-4	3E-4
Ce-144	5.3E-3	3E-5
Np-239	1.7E-1	2E-4
Noble Gases	-	
Total	2.40E1	

* These source terms were calculated in accordance with NUREG-0016 by using the USNRC "GALE" Code.

** MPC_i Values are 10 times the concentration values of 10CFR20.1001 - 20.2402 Table 2 Column 2.

l/plr

Table 2 A_{ij} Values for the Monticello Nuclear Generating Plant (mrem/hr per µCi/ml)

Nuclide	Bone	Liver	T. Body	Thyroid	Kidney	Lung	GI-LLI
1 H-3	0.00E 00	1.47E 00	1.47E 00	1.47E 00	1.47E 00	1.47E 00	1.47E 00
6 C 14	3.13E 04	6.26E 03	6.26E 03	6.26E 03	6.26E 03	6.26E 03	6.26E 03
11 Na-24	4.27E 02	4.27E 02	4.27E 02	4.27E 02	4.27E 02	4.27E 02	4.27E 02
24 Cr-51	0.00E 00	0.00E 00	1.31E 00	7.80E 01	2.38E 01	1.73E 00	3.28E 02
25 Mn-54	0.00E 00	4.43E 02	8.45E 02	0.00E 00	1.32E 03	0.00E 00	1.36E 04
25 Mn-56	0.00E 00	1.11E 02	1.98E 01	0.00E 00	1.42E 02	0.00E 00	3.56E 03
26 Fe-55	6.91E 02	4.77E 02	1.11E 02	0.00E 00	0.00E 00	2.66E 02	2.74E 02
26 Fe-59	1.09E 03	2.56E 03	9.83E 02	0.00E 00	0.00E 00	7.16E 02	8.54E 03
27 Co-58	0.00E 00	9.80E 01	2.20E 02	0.00E 00	0.00E 00	0.00E 00	1.99E 03
27 Co-60	0.00E 00	2.82E 02	6.21E 02	0.00E 00	0.00E 00	0.00E 00	5.29E 03
28 Ni-63	3.27E 04	2.26E 03	1.10E 03	0.00E 00	0.00E 00	0.00E 00	4.72E 02
28 Ni-65	1.33E 02	1.72E 01	7.87E 00	0.00E 00	0.00E 00	0.00E 00	4.37E 02
29 Cu-64	0.00E 00	1.10E 01	5.15E 00	0.00E 00	2.76E 01	0.00E 00	9.34E 02
30 Zn-65	2.32E 04	7.39E 04	3.34E 04	0.00E 00	4.94E 04	0.00E 00	4.66E 04
30 Zn-69	4.94E 01	9.46E 01	6.58E 00	0.00E 00	6.14E 01	0.00E 00	1.42E 01
35 Br-83	0.00E 00	0.00E 00	4.09E 01	0.00E 00	0.00E 00	0.00E 00	5.89E 01
35 Br-84	0.00E 00	0.00E 00	5.30E 01	0.00E 00	0.00E 00	0.00E 00	4.16E-04
35 Br-85	0.00E 00	0.00E 00	2.18E 00	0.00E 00	0.00E 00	0.00E 00	1.02E-15
37 Rb-86	0.00E 00	1.01E 05	4.72E 04	0.00E 00	0.00E 00	0.00E 00	2.00E 04
37 Rb-88	0.00E 00	2.90E 02	1.54E 02	0.00E 00	0.00E 00	0.00E 00	4.01E-09
37 Rb-89	0.00E 00	1.92E 02	1.35E 02	0.00E 00	0.00E 00	0.00E 00	1.12E-11
38 Sr-89	2.58E 04	0.00E 00	7.40E 02	0.00E 00	0.00E 00	0.00E 00	4.14E 03
38 Sr-90	6.35E 05	0.00E 00	1.56E 05	0.00E 00	0.00E 00	0.00E 00	1.83E 04
38 Sr-91	4.75E 02	0.00E 00	1.92E 01	0.00E 00	0.00E 00	0.00E 00	2.26E 03
38 Sr-92	1.80E 02	0.00E 00	7.78E 00	0.00E 00	0.00E 00	0.00E 00	3.57E 03

Table 2 A_{ij} Values for the Monticello Nuclear Generating Plant (mrem/hr per µCi/ml) (cont'd)

Nuclide	Bone	Liver	T. Body	Thyroid	Kidney	Lung	GI-LLI
39 Y-90	6.90E-01	0.00E 00	1.35E-02	0.00E 00	0.00E 00	0.00E 00	7.32E 03
39 Y-91m	6.52E-03	0.00E 00	2.53E-04	0.00E 00	0.00E 00	0.00E 00	1.92E-02
39 Y-91	1.01E 01	0.00E 00	2.70E-01	0.00E 00	0.00E 00	0.00E 00	5.57E 03
39 Y-92	6.06E-02	0.00E 00	1.77E-03	0.00E 00	0.00E 00	0.00E 00	1.06E 03
39 Y-93	1.92E-01	0.00E 00	5.31E-03	0.00E 00	0.00E 00	0.00E 00	6.10E 03
40 Zr-95	6.02E-01	1.93E-01	1.31E-01	0.00E 00	3.03E-01	0.00E 00	6.11E 02
40 Zr-97	3.32E-02	6.71E-03	3.07E-03	0.00E 00	1.01E-02	0.00E 00	2.08E 03
41 Nb-95	4.47E 02	2.49E 02	1.34E 02	0.00E 00	2.46E 02	0.00E 00	1.51E 06
42 Mo-99	0.00E 00	1.54E 02	2.94E 01	0.00E 00	3.50E 02	0.00E 00	3.58E 02
43 Tc-99m	1.13E-02	3.34E-02	4.25E-01	0.00E 00	5.07E-01	1.63E-02	1.97E 01
43 Tc-101	1.21E-02	1.75E-02	1.72E-01	0.00E 00	3.15E-01	8.94E-03	5.26E-14
44 Ru-103	6.63E 00	0.00E 00	2.86E 00	0.00E 00	2.53E 01	0.00E 00	7.74E 02
44 Ru-105	5.52E 01	0.00E 00	2.18E-01	0.00E 00	7.13E 00	0.00E 00	3.38E 02
44 Ru-106	9.85E 01	0.00E 00	1.25E 01	0.00E 00	1.90E 02	0.00E 00	6.38E 03
47 Ag-110m	2.78E 00	2.57E 00	1.53E 00	0.00E 00	5.06E 00	0.00E 00	1.05E 03
52 Te-125m	2.60E 03	9.41E 02	3.48E 02	7.81E 02	1.06E 04	0.00E 00	1.04E 04
52 Te-127m	6.56E 03	2.35E 03	8.00E 02	1.68E 03	2.67E 04	0.00E 00	2.20E 04
52 Te-127	1.07E 02	3.83E 01	2.31E 01	7.90E 01	4.34E 02	0.00E 00	3.42E 03
52 Te-129m	1.11E 04	4.16E 03	1.76E 03	3.83E 03	4.65E 04	0.00E 00	5.61E 04
52 Te-129	3.04E 01	1.14E 01	7.42E 00	2.34E 01	1.23E 02	0.00E 00	2.30E 01
52 Te-131m	1.68E 03	8.20E 02	6.83E 02	1.30E 03	9.31E 03	0.00E 00	8.14E 04
52 Te-131	1.81E 01	7.98E 00	6.03E 00	1.57E 01	8.37E 01	0.00E 00	2.70E 00
52 Te-132	2.44E 03	1.58E 03	1.48E 03	1.75E 03	1.52E 04	0.00E 00	7.47E 04
53 I-130	3.61E 01	1.07E 02	4.21E 01	9.03E 03	1.66E 02	0.00E 00	9.18E 01
53 I-131	1.99E 02	2.84E 02	1.63E 02	9.32E 04	4.88E 02	0.00E 00	7.50E 01
53 I-132	9.70E 00	2.60E 01	9.08E 00	9.08E 02	4.13E 01	0.00E 00	4.88E 00
53 I-133	6.79E 01	1.18E 02	3.60E 01	1.74E 04	2.06E 02	0.00E 00	1.06E 02
53 I-134	5.07E 00	1.38E 01	4.92E 00	2.39E 02	2.19E 01	0.00E 00	1.20E-02
53 I-135	2.12E 01	5.54E 01	2.05E 01	3.66E 03	8.89E 01	0.00E 00	6.26E 01

Table 2 A_{ij} Values for the Monticello Nuclear Generating Plant (mrem/hr per µCi/ml) (cont'd)

Nuclide	Bone	Liver	T. Body	Thyroid	Kidney	Lung	GI-LLI
55 Cs-134	2.99E 05	7.10E 05	5.81E 05	0.00E 00	2.30E 05	7.63E 04	1.24E 04
55 Cs-136	3.12E 04	2.23E 05	8.88E 04	0.00E 00	6.86E 04	9.41E 03	1.40E 04
55 Cs-137	3.83E 05	5.23E 05	3.43E 05	0.00E 00	1.78E 05	5.90E 04	1.01E 04
55 Cs-138	2.65E 02	5.23E 02	2.59E 02	0.00E 00	3.84E 02	3.80E 01	2.23E-03
56 Ba-139	2.08E 00	1.48E-03	6.10E-02	0.00E 00	1.39E-03	8.41E 04	3.69E 00
56 Ba-140	4.36E 02	5.47E-01	2.85E 01	0.00E 00	1.86E-01	3.13E 01	8.97E 02
56 Ba-141	1.01E 00	7.64E-04	3.41E-02	0.00E 00	7.10E-04	4.34E 04	4.77E-10
56 Ba-142	4.57E-01	4.70E-04	2.88E-02	0.00E 00	3.97E-04	2.66E 04	6.44E-19
57 La-140	1.79E-01	9.04E-02	2.39E-02	0.00E 00	0.00E 00	0.00E 00	6.64E 03
57 La-142	9.18E-03	4.18E-03	1.04E-03	0.00E 00	0.00E 00	0.00E 00	3.05E 01
58 Ce-141	1.34E-01	9.04E-02	1.03E-02	0.00E 00	4.20E-02	0.00E 00	3.46E 02
58 Ce-143	2.36E-02	1.74E 01	1.93E-03	0.00E 00	7.67E-03	0.00E 00	6.51E 02
58 Ce-144	6.97E 00	2.91E 00	3.74E-01	0.00E 00	1.73E 00	0.00E 00	2.36E 03
59 Pr-143	6.60E-01	2.65E-01	3.27E-02	0.00E 00	1.53E-01	0.00E 00	2.89E 03
59 Pr-144	2.16E-03	8.97E-04	1.10E-04	0.00E 00	5.06E-04	0.00E 00	3.11E-14
60 Nd-147	4.51E-01	5.22E-01	3.12E-02	0.00E 00	3.05E-01	0.00E 00	2.50E 04
74 W-187	2.97E 02	2.48E 02	8.68E 01	0.00E 00	0.00E 00	0.00E 00	8.13E 04
93 Np-239	4.26E-02	4.19E-03	2.31E-03	0.00E 00	1.31E-02	0.00E 00	8.60E 02

OFFSITE DOSE CALCULATION MANUAL - TABLE OF CONTENTS

SECTION		PAGE
1.0	RECORD OF REVISION	3
2.0	GASEOUS EFFLUENT CALCULATIONS	4
2.1	Monitor Alarm Setpoint Determination	4
2.2	Gaseous Effluent Dose Rate - Compliance With Technical Specifications	12
2.3	Gaseous Effluents - Compliance With 10CFR50	15
2.4	Summary of EBARR Computer Program	21
2.5	Dose Parameters for Radioiodines, Particulates and Tritium	26
2.6	References	35
Figure 1	Gaseous Radwaste	36
Figure 2	Ventilation System	37
Table 1	Gaseous Source Terms(3) Ai, Ci/yr	38
Table 2	Dose Factors and Constants for the Total Body and Skin for Gaseous Radionuclides	39
Table 3	Air Ejector Monitor Trip Setting and Storage Tank Contents Storage Tank Activity in Dose Equivalent Curies Xe-133 12 Hours After Completion of Tank Fill Release Rate Set to 1.00 of Maximum Trip Setting	41
Table 4	Child Critical Organ Dose Parameters for Radionuclide i for the Inhalation Pathway	44
Table 5	Dose Factors for Noble Gases and Daughters That May Be Detected in Gaseous Effluents	45
Table 6	Dose Parameters for Finite Evaluated Plumes for the Critical Boundary Location 0.51 mi from the Stack in the SSE Sector	46
Table 7	Ri Values for the Monticello Nuclear Generating Plant Ground Pathway	47
Table 8	Ri Values for the Monticello Nuclear Generating Plant Vegetable Pathway Adult Age Group	48
Table 9	Ri Values for the Monticello Nuclear Generating Plant Vegetable Pathway Teen Age Group	49
Table 10	Ri Values for the Monticello Nuclear Generating Plant Vegetable Pathway Child Age Group	50
Table 11	Ri Values for the Monticello Nuclear Generating Plant Meat Pathway Adult Age Group	51
Table 12	Ri Values for the Monticello Nuclear Generating Plant Meat Pathway Teen Age Group	52

Approval: PCR 01064105

l/jlk

SECTION		PAGE
Table 13	Ri Values for the Monticello Nuclear Generating Plant Meat Pathway Child Age Group	53
Table 14	Ri Values for the Monticello Nuclear Generating Plant Cow Milk Pathway Adult Age Group	54
Table 15	Ri Values for the Monticello Nuclear Generating Plant Cow Milk Pathway Teen Age Group	55
Table 16	Ri Values for the Monticello Nuclear Generating Plant Cow Milk Pathway Child Age Group	56
Table 17	Ri Values for the Monticello Nuclear Generating Plant Cow Milk Pathway Infant Age Group	57
Table 18	Ri Values for the Monticello Nuclear Generating Plant Goat Milk Pathway Adult Age Group	58
Table 19	Ri Values for the Monticello Nuclear Generating Plant Goat Milk Pathway Teen Age Group	59
Table 20	Ri Values for the Monticello Nuclear Generating Plant Goat Milk Pathway Child Age Group	60
Table 21	Ri Values for the Monticello Nuclear Generating Plant Goat Milk Pathway Infant Age Group	61
Table 22	Ri Values for the Monticello Nuclear Generating Plant Inhalation Pathway Adult Age Group	62
Table 23	Ri Values for the Monticello Nuclear Generating Plant Inhalation Pathway Teen Age Group	63
Table 24	Ri Values for the Monticello Nuclear Generating Plant Inhalation Pathway Child Age Group	64
Table 25	Ri Values for the Monticello Nuclear Generating Plant Inhalation Pathway Infant Age Group	65
Table 26	Table of Radioisotope Constants Used by EBARR	66

1.0 RECORD OF REVISION

Revision No.	Date	Reason for Revision
1	December - 1998	Changed word "waste" to "effluent" in section 1.0, changed 1st sentence in section 2.0 to exact wording in T.S., added section 3.0 to reference section 1.0 word change to LAR 39.
2	October - 2000	Moved previous ODCM-03.01 (GASEOUS EFFLUENTS) into this section and renamed this section "GASEOUS EFFLUENTS CALCULATIONS" to facilitate moving the Radiological Effluents Tech Specs to the ODCM. Moved associated figures and tables into this section to make the section easier to use. Removed references to the unused MIDAS System. Revised references to the X/Q and D/Q values now located in Appendix A.
3	November - 2001	Replaced maximum acceptable flow rate in equation 2.1-9 (85.5 cfm) to the effluent flowrate at the Offgas Pretreatment Monitor.
4	January - 2004	Fixed typographical errors on equations 2.1-4, 2.5-4 and 2.5-5. Removed plant activity uptake through soil factors from equations 2.5-5, 2.5-7 and 2.5-9. This term models plant activity uptake through the soil. Experience has shown this to be an insignificant pathway and the NRC drops it from consideration in NUREG 0133. Removed reference to 10CFR20 in sections 2.0.B., 2.2.1, 2.2, 2.2.1 and 2.2.2. With the revision to 10CFR20, the connection between the 400 and 3000 mRem/yr dose rate limits for gaseous effluent monitor alarm setpoints was broken. These limits still exist, but they are Technical Specification only requirements. Moved sentence about real time x/Q and MIDAS XP computer program in section 2.2.3 to section 2.2.2 where it belongs. Added sentence about historical atmospheric dispersion factors (D/Q) being used to determine critical receptor to section 2.2.3.
5	March - 2007	Changed references for "10CFR100" to "10CFR50.67" as required by License Amendment 148 (Alternate Source Term).

2.0 GASEOUS EFFLUENT CALCULATIONS

This section describes the procedures used by MNGP to:

A. Determine alarm point settings for gaseous effluent monitors;

B. Determine that dose rates at the site boundary from noble gases, particulates, and iodines remain below the limits of Technical Specifications, and

C. Determine that the total dose from airborne effluents for the year is within the limits of Appendix I of 10CFR50.

The computations of this section may be done manually, by use of computer programs which implement these algorithms.

2.1 Monitor Alarm Setpoint Determination

This procedure determines the effluent monitor alarm setpoint that indicates if the dose rate at or beyond the site boundary due to noble gas radionuclides in the gaseous effluent released from the site exceeds 500 mrem/year to the whole body or exceeds 3000 mrem/year to the skin. Accident monitors are set to limit effluent releases to a small fraction of the limits specified in 10CFR50.67. In addition this section calculates the maximum activity permitted in each off-gas storage tank.

Monitor high alarm or isolation setpoints are established in one of the following ways:

1. Monthly calculation of setpoints using the methodology of Section 2.1.1 for noble gas nuclides in releases during the previous month.

2. Prior to each containment purge, recalculation of the setpoint using the methodology of Section 2.1.1 based on the sample taken prior to purging.

2.1.1 Effluent Monitors

Monitor alarm setpoints are determined to assure compliance with Technical Specifications. The setpoints indicate that the dose rate at or beyond the site boundary due to noble gas radionuclides in the gaseous effluent released from the site exceeds 500 mrem/year to the whole body or exceeds 3000 mrem/year to the skin.

Monitor alarm setpoints are calculated for the Reactor Building Ventilation Plenum Noble Gas monitors and the Stack Noble Gas monitors once per month. These calculations are based on the noble gas isotopes in releases made during the previous month. The calculations are performed by the DOSGAS computer program.

In addition, prior to containment purging, the monitor setpoint for the monitor release point is recalculated. This calculation is performed by the DWCAL computer program. The monitor setpoint is determined as follows:

1. If no detectable noble gas activity is found in the purge sample, the values used as the basis for the alarm point setting are from the column, "Drywell purging" in Table 1, Gaseous Source Terms.

2. If any calculated setpoint is less than the existing monitor setpoint, the setpoint is reduced to the new value.

3. If the calculated setpoint is greater than the existing monitor setpoint, the setpoint may remain at the lower value or be increased to the new value.

4. The setpoint during purging may not be increased above the setpoint determined for continuous releases, however.

Except for containment inerting and deinerting, all containment purging and venting is done via the standby gas treatment system and plant stack. Containment inerting and deinerting releases are made via the Reactor Building vent. The small amount of containment atmosphere released by the containment sampling system on a continuous basis is not considered a venting operation.

A. Reactor Building Vent Alarm Setpoint

The following method applies to gaseous releases via the Reactor Building vent when determining the high-high alarm setpoint for the Reactor Building Vent Noble Gas Monitor . This method is applied to both continuous releases and batch releases (containment inerting and deinerting).

1. Determine the "mix" (noble gas radionuclides and composition) of the gaseous effluent.

   a. Determine the gaseous source terms that are representative of the "mix" of the gaseous effluent. Gaseous source terms are the total curies of each noble gas released during the previous month or a representative analysis of the gaseous effluent. Table 1 source terms may be used if the Reactor Building releases for the previous month were below the lower limits of detection (LLD), or, in the case of inerting and deinerting releases, no detectable activity was found in the grab sample taken prior to purging.

b. Determine S_i, the fraction of the total radioactivity in the gaseous effluent comprised by noble gas radionuclide "i", for each individual noble gas radionuclide in the gaseous effluent.

$$S_i = \frac{A_i}{\sum_i A_i} \qquad 2.1\text{-}1$$

where

A_i = The radioactivity of noble gas radionuclide "i" in the gaseous effluent.

2. Determine Q_t, the maximum acceptable total release rate of all noble gas radionuclides in the gaseous effluent (μCi/sec), based upon the whole body exposure limit (500 mrem/yr).

$$Q_t = \frac{500}{(\chi/Q)_v \sum_i K_i S_i} \qquad 2.1\text{-}2$$

where

$(\chi/Q)_v$ = The highest calculated average relative concentration of effluents released via the Reactor Building vent for any area at or beyond the site boundary for all sectors (sec/M^3) from Appendix A, Table 3. For purge releases, substitute the value obtained from Chemistry Manual Procedure I.6.07 (ATMOSPHERIC DISPERSION DETERMINATION).

K_i = The total whole body dose factor due to gamma emissions from noble gas radionuclide "i" (mrem/year/μCi/m^3) from Table 2.

3. Determine Q_t based upon the skin exposure limit (3000 mrem/yr).

$$Q_t = \frac{3000}{(\chi/Q)_v \sum_i (L_i + 1.1\ M_i)\ S_i} \qquad 2.1\text{-}3$$

where

$L_i + 1.1\ M_i$ = the total skin dose factor due to emissions from noble gas radionuclide "i" (mrem/year/μCi/m^3) from Table 2.

4. Determine HHSP (the monitor high-high alarm setpoint above background (net μCi/sec)).

<u>NOTE</u>: Use the <u>lower</u> of the Q_t values obtained in Sections 2.1.1.A.2. and 2.1.1.A.3.

$$HHSP = 0.50\ Q_t \qquad 2.1\text{-}4$$

0.50 = Fraction of the total radioactivity from the site via the monitored release point to ensure that the site boundary limit is not exceeded due to simultaneous releases from several release points.

B. Stack Isolation Setpoint

The following method applies to gaseous releases via the Stack when determining the high-high alarm setpoint for the Stack Gas Monitor which initiates isolation of Stack releases. The method is applied to both continuous releases and batch releases (containment purges). Mechanical vacuum pump releases (relatively insignificant) will be controlled using the continuous setpoint.

1. Determine the "mix" (noble gases and composition) of the gaseous effluent.

   a. Determine the gaseous source terms that are representative of the "mix" of the gaseous effluent. Gaseous source terms are the total curies of each noble gas released during the previous month or a representative analysis of the gaseous effluent. Table 1 source terms may be used if the Stack releases for the previous month were below the lower limits of detection (LLD).

b. Determine S_i, the fraction of the total radioactivity in the gaseous effluent comprised by noble gas radionuclide "i", for each individual noble gas radionuclide in the gaseous effluent.

$$S_i = \frac{A_i}{\sum_i A_i} \qquad 2.1\text{-}5$$

where

A_i = The radioactivity of noble gas radionuclide "i" in the gaseous effluent.

2. Determine Q_t, the maximum acceptable total release rate of all noble gas radionuclides in the gaseous effluent (µCi/sec), based upon the whole body exposure limit (500 mrem/yr).

$$Q_t = \frac{500}{\sum_i V_i S_i} \qquad 2.1\text{-}6$$

<u>NOTE</u>: For short-term batch releases (equal to or less than 500 hrs/yr) via drywell purging, substitute v_i for V_i in Equation 2.1-6.

where

V_i = The constant for long-term releases (greater than 500 hr/yr) for noble gas radionuclide "i" accounting for the gamma radiation from the elevated finite plume (mrem/year/µCi/sec) from Table 2.

v_i = The constant for short-term releases (equal to or less than 500hr/yr) for noble gas radionuclide "i" accounting for the gamma radiation from the elevated finite plume (mrem/yr/µCi/sec) from Table 2.

3. Determine Q_t based upon the skin exposure limit (3000 mrem/yr).

$$Q_t = \frac{3000}{\Sigma_i (L_i (\chi/Q)_s + 1.1B_i) S_i} \qquad 2.1\text{-}7$$

NOTE: For short-term batch releases (equal to or less than 500 hours per year) via drywell purging, use the short-term $(\chi/q)_s$ value and substitute b_i for B_i in Equation 2.1-7.

where

$L_i(\chi/Q)_s + 1.1B_i$ = The total skin dose constant for long-term releases (greater than 500 hours per year) due to emissions from noble gas radionuclide "i", Table 2, (mrem/year/µCi/sec);

$L_i(\chi/q)_s + 1.1b_i$ = The total skin dose constant for short-term releases (less than or equal to 500 hours per year) due to emissions from noble gas radionuclide "i", Table 2, (mrem/year/µCi/sec).

4. Determine HHSP (the monitor high-high alarm setpoint above background (µCi/sec).

NOTE: Use the lower of the Q_t values obtained in sections 2.1.1.B.2. and 2.1.1.B.3.

$$HHSP = 0.50\ Q_t \qquad 2.1\text{-}8$$

0.50 = Fraction of the total radioactivity from the site via the monitored release point to ensure that the site boundary limit is not exceeded due to simultaneous releases from several release points.

2.1.2 Accident Monitors

The gross radioactivity in noble gases removed from the main condenser by means of steam jet air ejectors as measured prior to entering the treatment, adsorption, and delay systems ***SHALL*** be limited by an alarm setpoint for the Offgas Monitor.

This procedure determines the monitor alarm setpoint that indicates if the potential body accident dose to an individual at or beyond the site boundary due to noble gas radionuclides in the gaseous effluent released from the site exceeds a small fraction of the limits specified in 10CFR50.67 in the event this effluent, including the radioactivity accumulated in the treatment system, is inadvertently discharged directly to the environment without treatment. This calculation is performed by the OFFGAS computer program on a routine or an as needed basis. Offgas flow is automatically terminated when this setpoint is reached.

A. Maximum Release Rate

Determine Q_t, the maximum acceptable total release rate in μCi/sec of all noble gas radionuclides in the gaseous effluent at the Offgas Monitor after a 5-minute decay, based on the maximum acceptable total release rate of 2.60E5 μCi/sec after a 30-minute decay.

1. Determine the offgas mixture of the gaseous effluent. The offgas mixture is the fraction of the offgas noble gas radioactivity caused by each recoil diffusion, and equilibrium component. The offgas mixture is determined at least once per month.

2. Determine Q_t based on the offgas mixture using Table 3. This table was prepared using a variation of the EBARR computer code.

B. Maximum Concentration

Determine C_t, the maximum acceptable total radioactivity concentration of all noble gas radionuclides in the gaseous effluent (μCi/cc).

$$C_t = 2.12\ E\text{-}03\ \frac{Q_t}{f} \qquad 2.1\text{-}9$$

where

f = The effluent flowrate at the Offgas Pretreatment Monitor (cfm);

C. Monitor Reading

Determine C.R., the calculated monitor reading above background attributed to the noble gas radionuclides (mR/hr).

$$C.R. = \frac{C_t}{E} \qquad 2.1\text{-}10$$

where

E = The detection efficiency of the monitor for noble gas radionuclides represented in main condenser offgas (μCi/cc/mR/hr) from Plant Chemistry Surveillance procedures.

D. Monitor High High Setpoint

The monitor high-high alarm setpoint above background (mr/hr) should be set at or below the C.R. value.

2.1.3 Offgas Storage Tank Maximum Activity

The maximum activity in each storage tank is limited to less than 22,000 curies of noble gas (considered as dose equivalent Xe-133) after 12 hours of holdup. To verify that this limit is not exceeded, Table 3 is used.

The gross radioactivity of noble gases from the main condenser air ejector is determined by isotopic analysis monthly and whenever a significant increase in offgas activity is noted. Analysis of this data is used to determine the primary mode of fission product release from the fuel (recoil, equilibrium, or diffusion) and the gross release rate. This information combined with the condenser air inleakage rate (cfm) and the air ejector monitor release rate is used to confirm that the maximum tank contents limit is not exceeded. This calculation is performed by the OFFGAS computer program on a routine or as needed basis.

Table 3 is entered with the offgas mixture (fraction recoil, diffusion, and equilibrium rounded to one decimal place) and the air inleakage rate (in cfm). The resulting tank activity is multiplied by the current total release rate after a 30 minute decay (μCi/sec) and divided by the maximum permitted air ejector release rate of 260,000 μCi/sec. Linear interpolation of air inleakage is used.

As noted earlier, Table 3 is derived from the EBARR computer program described in Section 2.4. It is extremely unlikely that the maximum tank activity limit will be exceeded.

2.2 Gaseous Effluent Dose Rate - Compliance With Technical Specifications

Dose rates resulting from the release of noble gases, and from radioiodines and particulates must be calculated to show compliance with 10CFR20. The dose rate limits of Technical Specifications are conservatively applied on an instantaneous basis at the hypothetical worst case location.

2.2.1 Noble Gases

The dose rate in unrestricted areas resulting from noble gas effluents is limited to 500 mrem/yr to the total body and 3000 mrem/yr to the skin. The setpoint determinations discussed in the previous section are based on the dose rate calculation method presented in NUREG-0133[4]. This represents a backward solution to the limiting dose rate equations in NUREG-0133. Setting alarm trip setpoints in this manner will ensure that the limits of Technical Specifications are met for noble gas releases. Therefore, no routine dose rate calculations for noble gases will be needed to show compliance with this part. Routine calculations are made for dose rates from noble gas releases to show compliance with 10CFR50, Appendix I by performing the DOSGAS computer program.

2.2.2 Radioiodine and Radioactive Particulates and Other Radionuclides

The dose rate in unrestricted areas resulting from the release of radioiodines and particulates with half lives greater than 8 days is limited by Technical Specifications to 1500 mrem/yr to any organ. The calculation of dose rate from radioiodines and particulates is performed for drywell purges prior to the release and weekly for all releases. This calculation is performed by the DWCAL computer program for drywell purges and 1/week by the IPART computer program for all releases. The calculations are based on the results of analyses obtained pursuant to Surveillance Requirement 3.1.4.B. To show compliance with Technical Specifications, Equation 2.2-1 will be evaluated for I-131, I-133, tritium, and radioactive particulates with half lives greater than eight days.

$$\Sigma P_{i_I} [\chi/Q_v) Q_{iv} + (\chi/Q_s) Q_{is}] < 1500 \text{ mrem/yr} \qquad 2.2\text{-}1$$

where

P_{i_I} = child critical organ dose parameter for radionuclide i for the inhalation pathway, mrem/yr per $\mu Ci/m^3$; (Table 4)

$(\chi/Q)_v$ = annual average relative concentration for long-term release from the Reactor Building vent at the critical location, sec/m^3 (Appendix A, Table 3);

$(\chi/Q)_s$ = annual average relative concentration for long-term releases from the offgas stack at the critical location, sec/m3 (Appendix A, Table 6);

Q_{iv} = the release rate of radionuclide i from the Reactor Building vent for the week of interest, µCi/sec;

Q_{is} = the release rate of radionuclide i from the offgas stack for the week of interest, µCi/sec.

The χ/Q values presented in Appendix A, Tables 3 and 6 have been calculated using the USNRC computer code "XOQDOQ"[5]. Dose rate calculations using Equation 2.2-1 are made once per week. The source terms Q_{iv} and Q_{is} are determined from the results of analysis of weekly stack and Reactor Building particulate filters and charcoal cartridges. These source terms include all gaseous releases from MNGP. They are recorded and reported as the total dose for compliance with Technical Specifications.

Radioiodines and particulates may be released from both the offgas stack and the Reactor Building vent. As specified in NUREG-0133, the critical receptor location is identified based on the Reactor Building vent χ/Q.

A component of the total stack or vent source term may be due to short term releases occurring as a result of containment drywell purging. Dose rate calculations are made on this component separately to further assure compliance with Technical Specifications prior to release. The calculated dose rate is used only to determine whether or not the drywell can be purged. All dose rates from drywell purges will be accounted for and reported through the weekly calculations discussed above. Release rates are determined from the results of analyses of samples from the drywell. The real time atmospheric dispersion factor (χ/Q) is calculated by performing the MIDAS XP Computer Program IAW MNGP Procedure I.06.07 (ATMOSPHERIC DISPERSION DETERMINATION).

The term Q_{is} for the calculation of drywell purge dose rate is determined by multiplying the concentration of each nuclide in the drywell by the rate of release. Credit will be taken for the expected reduction in radionuclide concentration due to use of the standby gas treatment system. Equation 2.2-2 is used to calculate purge dose rates. Only one source term is used depending on the release point (stack or Reactor Building vent). Short term values of χ/q from Appendix A, Table 9 or Table 12 are used in the purge dose rate calculation. the limiting dose rate limit for each purge is determined using:

$$BL = 1500 - (D_{cv} + D_{cs} - D_{dw}) \qquad 2.2\text{-}2$$

where

BL = limiting dose rate for the batch, mrem/yr;

D_{cv} = previous week's dose rate from Reactor Building continuous and batch releases, mrem/yr;

D_{cs} = previous week's dose rate from offgas stack continuous and batch releases, mrem/yr;

D_{dw} = previous week's total dose rate from drywell purge releases, mrem/yr, for the purge release point.

Although mechanical vacuum pump releases are batch mode, they cannot be sampled prior to release. For this reason, no prerelease dose rate calculations can be made from this source. Experience has shown mechanical vacuum pump release to be well within Technical Specifications limits.

2.2.3 Critical Receptor Identification

As stated in 5.2.1 of NUREG-0133, when the critical receptor is different for stack and vent releases, the controlling location for vent releases should be used. For this reason, the Reactor Building vent dispersion parameters are used to identify the critical receptor. (Historical Atmospheric Dispersion factors (D/Q) are used for determining the critical receptor (App A, Table 5).) As discussed previously, weekly and batch dose rate calculations are performed for the critical boundary location. The critical boundary location is based on reactor vent long term χ/Q (Appendix A, Table 3) is 0.43 miles in the SSE sector.

2.3 Gaseous Effluents - Compliance With 10CFR50

Doses resulting from the release of noble gases, and radioiodines and particulates must be calculated to show compliance with Appendix I of 10CFR50. The calculations are performed monthly for all gaseous effluents. Calculations of the doses received due to the release of noble gases is performed by the DOSGAS computer program. Similarly the dose received due to the release of radioiodines and particulates is calculated by the DOSPIT computer program. These two programs are performed monthly or as required.

This section describes the methods and equations used at MNGP to perform the dose evaluation using manual methods based on historical meteorological dispersion parameters.

2.3.1 Noble Gases

The air dose in unrestricted areas at MNGP is limited to:

A. for any calendar quarter:

$D_\gamma \leq$ 5 mrad due to gamma radiation; and
$D_\beta \leq$ 10 mrad due to beta radiation; and

B. for any calendar year:

$D_\gamma \leq$ 10 mrad due to gamma radiation; and
$D_\beta \leq$ 20 mrad due to beta radiation.

Air doses may be calculated using historical meteorological data using the highest normalized concentration statistics as the best estimator of the atmospheric dispersion.

A. Air Dose Based on Historical Meteorology

The limiting air dose, D, based on historical meteorology is based on the critical receptor in the unrestricted area. For air doses the critical receptor is described by the off-site location with the highest long term annual average relative concentration (χ/Q) at or beyond the restricted area boundary. For short-term vent releases (less than 500 hours per year), the location with the highest short-term average relative concentration (χ/q) is chosen. The critical receptor is described in section 2.3.5.

For gamma radiation, the air dose is given by:

$$D_\gamma = 3.17 \times 10^{-8} \sum_i (M_i[(\chi/Q)_v Q_{iv} + (\chi/q)_v \; q_{iv}] + B_i Q_{is} + b_i q_{is})$$

The historical meteorological data base is the basis for the method described in the original MNGP ODCM.

For beta radiation, the air dose is:

$$D_\beta = 3.17 \times 10^{-8} \sum_i N_i \left[(\chi/Q)_v Q_{iv} + (\chi/q)_v q_{iv} + (\chi/Q)_s Q_{is} + (\chi/q)_s q_{is}\right] \qquad 2.3\text{-}2$$

where

M_i = The air dose factor due to gamma emission for each identified noble gas radionuclide i, mrad/yr per $\mu Ci/m^3$; (Table 5)

N_i = the air dose factor due to beta emissions for each identified noble gas radionuclide i, mrad/yr per $\mu Ci/m^3$; (Table 5)

$(\chi/Q)_v$ = the annual average relative concentration for areas at or beyond the site boundary for long-term Reactor Building vent releases (greater than 500 hr/yr), sec/m³, (Appendix A, Table 3);

$(\chi/q)_v$ = the relative concentration for areas at or beyond the site boundary for short-term Reactor Building vent releases (equal to or less than 500 hr/yr), sec/m³, (Appendix A, Table 12);

$(\chi/Q)_s$ = the annual average relative concentration for areas at or beyond the site boundary for long-term offgas stack releases (greater than 500 hr/yr), sec/m³ (Appendix A, Table 6);

$(\chi/q)_s$ = the relative concentration for areas at or beyond the site boundary for short-term offgas stack releases (equal to or less than 500 hr/yr), sec/m³ (Appendix A, Table 9);

q_{is} = the average release of the noble gas radionuclide i in gaseous effluents for short-term offgas stack releases (equal to or less than 500 hr/yr), μCi;

q_{iv} = the average total release of the noble gas radionuclide i in gaseous effluents for short-term Reactor Building vent releases (equal to or less than 500 hr/yr), μCi;

Q_{is} = the total release of noble gas radionuclide i in gaseous releases for long-term offgas stack releases (greater than 500 hr/yr), μCi;

Q_{iv} = the total release of noble gas radionuclide i in gaseous effluents for long-term Reactor Building vent releases (greater than 500 hr/yr), μCi;

B_i = the constant for long-term releases (greater than 500 hr/yr) for each identified noble gas radionuclide i accounting for the gamma radiation from the elevated finite plume, mrad/yr per μCi/sec (Table 6);

b_i = the constant for short-term releases (less than or equal to 500hr/yr) for each identified noble gas radionuclide i accounting for the gamma radiation from the elevated finite plume, mrad/yr per μCi/sec (Table 6);

$3.17 \times 10_{-8}$ = the inverse of the number of seconds in a year.

Noble gases are continuously released from the Reactor Building vent and the plant stack. These long-term releases rates are determined from the continuous noble gas monitor readings and periodic radionuclide analyses. There are infrequent containment purges from either release point. To separate the short-term release from the long term release (the continuous monitor records both), the drywell source term should be subtracted from the total source term whenever a purge release occurs. Periodic radionuclide analysis of main condenser offgas and radionuclide analysis of each purge prior to release are used in conjunction with the total activity measured by the monitor to quantify individual noble gas nuclides released.

Long-term and short-term χ/Q's are given in Appendix A for both the Reactor Building vent and the plant stack. Short-term χ/q's were calculated using the USNRC computer code "XOQDOQ" assuming 144 hours per year drywell purge. Values of M and N were calculated using the methodology presented in NUREG-0133 and are given in Table 5. Table 6 presents values of B_i and b_i calculated using the USNRC computer code "RABFIN." This code was also used to calculate values of V_i presented in section 1.0. Values of v_i, were calculated by multiplying V_i by the ratio of b_i to B_i. The v_i, iB_i, and b_i values of Table 6 are the maximum values for the site boundaries location. This location, 0.51 mi SSE, is different than the critical site boundary location based upon the Reactor Building vent χ/Q.

2.3.2 Radioiodine, Particulates, and Other Radionuclides

The dose, D_{aj}, to an individual from radioiodines, radioactive materials in particulate form and radionuclides other than noble gases with half lives greater than eight days in gaseous effluents released to unrestricted areas ***SHALL*** be limited to:

$D_{aj} \leq$ 7.5 mrem for any calendar quarter

$D_{aj} \leq$ 15 mrem for any calendar year

These limits apply to the receptor location where the combination of existing pathways and age groups indicates the maximum exposure.

A. Dose from Radioiodines and Particulates Based on Historical Meteorology

The worst case dose to an individual from I-131, tritium and radioactive particulates with half-lives greater than eight days in gaseous effluents released to unrestricted areas is determined by the following expressions:

$$D_{aj} = 3.17 \times 10^{-8} \sum_{pi}\sum R_{iapj} [W_v Q_{iv} + W_v q_{iv} + W_s Q_{is} + W_s q_{is}] \qquad 2.3\text{-}3$$

where

Q_{is} = release of radionuclide i for long-term offgas stack releases (greater than 500 hr/yr), μCi;

Q_{iv} = release of radionuclide i for long-term Reactor Building vent releases (greater than 500 hr/yr), μCi;

q_{is} = release of radionuclide i for short-term offgas stack purge releases (equal to or less than 500 hr/yr); μCi;

q_{iv} = release of radionuclide i for short-term Reactor Building vent purge releases (equal to or less than 500 hr/yr); μCi;

W_s = the dispersion parameter for estimating the dose to an individual at the controlling location for long-term offgas stack releases (greater than 500 hr/yr), sec/m^3 or m^{-2};

W_v = the dispersion parameter for estimating the dose to an individual at the controlling location for long-term Reactor Building vent releases (greater than 500 hr/yr), sec/m^3 or m^{-2};

W_s = the dispersion parameter for estimating the dose to an individual at the controlling location for short-term offgas stack releases (equal to or less than 500 hr/yr), sec/m^3 or m^{-2};

W_v = the dispersion parameter for estimating the dose to an individual at the controlling location for short-term Reactor Building vent releases (equal to or less than 500 hr/yr), sec/m^3 or m^{-2}

3.17×10^{-8} = the inverse of the number of seconds in a year.

R_{iapj} = the dose factor for each identified radionuclide i, pathway p, age group a, and organ j, m^2 mrem/yr per µCi/sec or mrem/yr per µCi/m^3.

The above equation is applied to each combination of age group and organ. Values of R_{iapj} have been calculated using the methodology given in NUREG-0133 and are given in Tables 7 through 25. The equation is applied to a controlling location which will be one of the following:

A. residence,

B. vegetable garden,

C. milk animal.

The selection of the actual receptor is discussed in section 2.3.5. The W values are in terms of χ/Q (sec/m^3) for the inhalation pathways and for tritium and in terms of D/Q (m^{-2}) for all other pathways.

Section 2.5.2 contains the methodology for calculating R_{iapj} values. This method will be used to compute dose factors for nuclides not tabulated in Tables 7 through 25 if they are encountered.

2.3.3 Cumulation of Doses

Doses calculated monthly are summed for comparison with quarterly and annual limits. The monthly results are added to the doses cumulated from the other months in the quarter of interest and in the year of interest and compared to the limits given in section 2.3.1 and 2.3.2. This summation is performed by the DOSGAS and the DOSPIT computer programs for doses from exposures due to noble gas, and radioiodine and particulates respectively. If these limits are exceeded, a Special Report will be submitted to the USNRC. If twice the limits are exceeded, a Special Report showing compliance with 40CFR190[9] will be submitted.

2.3.4 Projection of Doses

Projection of doses is not necessary. The ODCM requires the offgas holdup system to be operated at all times.

2.3.5 Critical Receptor Identification

The critical receptors for compliance with 10CFR50, Appendix I will be identified. For the noble gas specification the critical location is based on the external dose pathway only. This location is the off-site location with the highest long-term Reactor Building vent χ/Q and is selected using the χ/Q values given in Appendix A, Table 4. The critical receptor location is used for showing compliance with 10CFR20 and remains the same unless meteorological data is re-evaluated or the site boundary changes.

The critical location for the radioiodine and particulate pathway is selected once per year. This selection follows the annual land use census performed within 5 miles of the MNGP. Each of the following locations is evaluated as a potential critical receptor before implementing the effluent technical specifications:

A. Residences in each sector.

B. Vegetable garden producing leafy green vegetables.

C. All identified milk animal locations.

The critical receptor is selected based on this evaluation.

Following the annual survey, doses are calculated using Equation 2.3-3 for all newly identified receptors and those receptors whose characteristics have changed significantly. The calculation includes appropriate information shown to exist at each location. The dispersion parameters given in this manual should be employed. The total releases reported for the previous calendar year should be used as the source term.

2.4 Summary of EBARR Computer Program

The basic task performed by EBARR is to predict the offgas composition and activity at various stages of waste gas treatment and at the time of release (Table 26). The basic data supplied to EBARR consists of the release rate, in μCi/sec measured at the SJAE, of six readily measurable fission product noble gases: Xe-133, Xe-135, Kr-85M, Kr-88, Kr-87, and Xe-138. There are nine other noble gases of interest from a radioactive effluent point of view. They are: Kr-90, Xe-139, Kr-89, Xe-137, Xe-135m, Kr-83m, Xe-133m, Xe-131m, and Kr-85. Many of these nine gases are not directly measurable in the presence of the others. By establishing the offgas release mode from the six measured release rates, EBARR computes the release rates of the other nine gases known to be present.

The first step performed by EBARR is to correct the release rates of the six measured noble gases for decay during their transit from the reactor vessel to the SJAE:

$$A_i(0) = A_i(t_{dly})\ e^{\lambda_i t_{dly}} \qquad 2.4\text{-}1$$

where

$A_i(t)$ = release rate of noble gas i at the time t after leaving reactor, μCi/sec;

t_{dly} = transit time from reactor to SJAE, sec;

λ_i = decay constant of noble gas i, sec^{-1}.

EBARR then uses a least square fitting routine to determine the values of B_1, B_2, and B_3 giving the best fit to $A_1(0)$ through $A_6(0)$ in the equation:

$$\log\left|\frac{A_i}{y_i\lambda_i}\right| = \log\left|B_1 + \frac{B_2}{\sqrt{\lambda_i}} + \frac{B_3}{\lambda_i}\right| \qquad 2.4\text{-}2$$

where

y_i = fraction of all fissions yielding noble gas i.

This equation consists of three terms; a recoil release mode term, a diffusion release mode term, and an equilibrium release mode term. This is the standard General Electric offgas distribution model.

The values of B_1, B_2, and B_3, are used by EBARR to characterize the offgas release mechanism in terms of percent recoil, percent diffusion, and percent equilibrium type release. This characterization is useful in fuel performance evaluation. The equation for these three fractions are:

$$\% \text{ Recoil} = 100 \times \frac{\sum_{i=1,6} B_1 y_i \lambda_i}{\sum_{i=1,6} (B_1 y_i \lambda_i + B_2 y_i \sqrt{\lambda_i} + B_3 y_i)} \qquad 2.4\text{-}3$$

$$\% \text{ Diffusion} = 100 \times \frac{\sum_{i=1,6} B_2 y_i \sqrt{\lambda_i}}{\sum_{i=1,6} (B_1 y_i \lambda_i + B_2 y_i \sqrt{\lambda_i} + B_3 y_i)} \qquad 2.4\text{-}4$$

$$\% \text{ Equilibrium} = 100 \times \frac{\sum_{i=1,6} B_3 y_i}{\sum_{i=1,6} (B_1 y_i \lambda_i + B_2 y_i \sqrt{\lambda_i} + B_3 y_i)} \qquad 2.4\text{-}5$$

The release rate from the reactor vessel for the nine noble gases not measured is then:

$$A_i(0) = B_1 y_i \lambda_i + B_2 y_i \sqrt{\lambda_i} + B_3 y_i \qquad 2.4\text{-}6$$

At any time, t, after leaving the reactor vessel the release rate is:

$$A_i(t) = A_i(0)\, e^{-\lambda_i t_i} \text{, for i = 3 through 14} \qquad 2.4\text{-}7$$

and

$$A_i(t) = A_i(0)\, e^{-\lambda_i t} + \frac{\propto_i \lambda_i A_j(0)}{\lambda_i - \lambda_j} \left(e^{-\lambda_j t} - e^{-\lambda_i t}\right) \text{, for 1 = 1, 2, and 15} \qquad 2.4\text{-}8$$

where

$\propto_i$ = fraction of disintegrations of isotope j producing isotope i.

Equation (2.4-8) contains an additional factor to account for the decay of Xe-131m to Xe-133, Xe-135m to Xe-135, and Kr-85m to Kr-85. This factor is normally small.

As shown in Table 26, the plant stack noble gas release consists of three components:

A. main condenser non-condensibles;

B. gland exhaust; and

C. stack dilution air drawn from Reactor and Turbine Buildings.

Source C is considered to be negligible compared to sources A and B. The composition of the gland exhaust release is assumed to be identical to the offgas mixture at the SJAE. Therefore, the stack release rate of isotope i is:

$$R_i(t) = A_i(t) + F_{loc}A_i(t_{dly}) \qquad 2.4\text{-}9$$

where

F_{loc} = fraction of main steam flow diverted to gland seal steam supply and the total noble gas release rate at any time is:

$$R_{tot}(t) = \sum_{i=1,\,15} [A_i(t) + F_{loc}A_i\,(t_{dly})] \qquad 2.4\text{-}10$$

EBARR also performs a secondary task of computing the compressed offgas storage tank contents in terms of dose equivalent Xe-133. Control 2.4.1.B in ODCM-03.01 limits this quantity to 22,000 Curies 12 hours after placing a tank in storage (when the discharge valve interlock permits the tank to be released).

Prior to reaching the storage tanks (Table 26), the offgas stream is delayed several hours flowing from the recombiners to the compressors via the 42-inch holdup pipe. Offgas reaching the tanks is therefore delayed by:

$$t_{ddly} = t_{dly} + \frac{P_{42}V_{42}}{P_aL} \qquad 2.4\text{-}11$$

where

V_{42} = 42-inch pipe volume;

P_{42} = 42-inch pipe pressure;

L = total air inleakage, SCFM, (Bleed air and condenser inleakage);

P_a = atmospheric pressure.

While a tank is being filled, offgas enters the tank at rate L. The activity of each isotope in the tank, C_i, is a function of time from the start of filling, t_f, is computed by EBARR using.

$$C_i(t_f) = \frac{A_i(t_{ddly})}{\lambda_i} \left(1 - e^{-\lambda_i t_f}\right) \text{ for } i = 3 \text{ to } 14 \qquad 2.4\text{-}12$$

and

$$C_i(t_f) = \frac{A_i(t_{ddly})}{i} \left(1 - e^{-\lambda_i t_f}\right) + \frac{\alpha_i \lambda_i A_j(t_{ddly})}{\lambda_j} \left[\frac{e^{-\lambda_i t_f} - e^{-\lambda_j t_f}}{\lambda_i - \lambda_j} + \frac{1 - e^{-\lambda_i t_f}}{\lambda_i}\right]$$

$$\text{for } i = 1, 2, \text{ and } 15 \qquad 2.4\text{-}13$$

Equation 2.4-13 contains an additional factor to account for the decay of Xe-133m to Xe-133, Xe-135m to Xe-135, and Kr-85m to Kr-85. This factor is normally small.

Pressure builds up in the tank at the rate:

$$p(t_f) = \frac{t_f L\, P_a}{V_{tk}} \qquad 2.4\text{-}14$$

where

V_{tk} = volume of storage tank.

When the pressure in the tank reaches the design value, P_{max}, at t_{fill}, EBARR assumes the tank is full. Total tank activity, C, and total tank Xe-133 dose equivalent activity, D, is computed at t_{rel} when the interlock on the tank discharge valve permits the tank to be released after an additional delay of t_{intk}:

$$t_{fill} = \frac{P_{max} V_{tk}}{P_a L} \qquad 2.4\text{-}15$$

$$t_{rel} = t_{fill} + t_{intk} \qquad 2.4\text{-}16$$

$$C_i(t_{rel}) = C_i(t_{fill})\, e^{-\lambda_i t_{intk}}, \text{ for } i = 3 \text{ through } 14 \qquad 2.4\text{-}17$$

and

$$C_i(t_{rel}) = \left(C_i(t_{fill})\, e^{-\lambda_i t_{intk}} + \frac{\alpha_i \lambda_i\, C_j(t_{fill})}{\lambda_i - \lambda_j} \left(e^{-\lambda_j t_{intk}} - e^{-\lambda_i t_{intk}}\right)\right) \text{ for } i = 1, 2, \text{ and } 15$$

2.4-18

$$C(t_{rel}) = \sum_{i = 1, 15} C(t_{rel}) \qquad 2.4\text{-}19$$

$$D(t_{rel}) = \frac{\sum_{i = 1, 15} C_i(t_{rel}) K_i}{K_i} \qquad 2.4\text{-}20$$

where

K_i = value of K_i for Xe-133 (i = 1) from Table 5.

The minimum offgas holdup time is:

$$t_{holdup} = t_{ddly} + t_{rel} \qquad 2.4\text{-}21$$

When the system is operating normally; however, with all five holdup tanks in service, the holdup time is given by:

$$t_{holdup} = t_{ddly} + 4\ t_{fill} \qquad 2.4\text{-}22$$

2.5 Dose Parameters for Radioiodines, Particulates and Tritium

This section contains the methodology which was used to calculate the dose parameters for radioiodines, particulates, and tritium to show compliance with 10CFR20 and Appendix I of 10CFR50 for gaseous effluents. These dose parameters, P_i and R_i were calculated using the methodology outlines in NUREG-0133 along with Regulatory Guide 1.109 Revision 1. The following sections provide the specific methodology which was utilized in calculating the P_i and R_i values for the various exposure pathways.

2.5.1 Calculation of P_i

The parameter, P_i, contained in the radioiodine and particulates portion of Section 2.2, includes pathway transport parameters of the ith radionuclide, the receptor's usage of the pathway media and the dosimetry of the exposure. Pathway usage rates and the internal dosimetry are functions of the receptor's age; however, the child age group will always receive the maximum dose under the exposure conditions assumed.

A. Inhalation Pathway

$$P_{i_I} = K' (BR) DFA_i \qquad 2.5\text{-}1$$

where

P_{i_I} = dose parameter for radionuclide i for the inhalation pathway, mrem/yr per $\mu Ci/m^3$;

K' = a constant of unit conversion,

= 10^6 pCi/µCi;

BR = the breathing rate of the child age group, m^3/yr

DFA_i = the maximum organ inhalation dose factor for the child age group for radionuclide i, mrem/pCi.

The age group considered is the child group. The child's breathing rate is taken as 3700 m^3/yr from Table E-5 of Regulatory Guide 1.109 Revision 1. The inhalation dose factors for the child, DFA_i, are presented in Table E-9 of Regulatory Guide 1.109 in units of mrem/pCi. The total body is considered as an organ in the selection of DFA_i.

The incorporation of breathing rate of the child and the unit conversion factor results in the following:

$$P_{i_l} = 3.7E9 \times DFA_i \qquad 2.5\text{-}2$$

2.5.2 Calculation of R_i

The radioiodine and particulate Control 2.3.1.A. is applicable to the location in the unrestricted area where the combination of existing pathways and receptor age groups indicates the maximum potential exposure occurs. The inhalation and ground plane exposure pathways ***SHALL*** be considered to exist at all locations. The grass-goat-milk, the grass-cow-milk, grass-cow-meat, and vegetation pathways are considered based on their existence at the various locations. R_i values have been calculated for the adult, teen, child, and infant age groups for the ground plane, cow milk, goat milk, vegetable and beef ingestion pathways. The methodology which was utilized to calculate these values is presented below.

A. Inhalation Pathway

$$R_{i_l} = K'(BR)_a\,(DFA_i)_a \qquad 2.5\text{-}3$$

where

R_{i_l} = dose factor for each identified radionuclide i of the organ of interest, mrem/yr per $\mu Ci/m^3$;

K' = a constant of unit conversion,

= 10^6 pCi/µCi;

$(BR)_a$ = breathing rate of the receptor of age group a, m^3/yr;

$(DFA_i)_a$ = organ inhalation dose factor for radionuclide i for the receptor of age group a, mrem/pCi.

The breathing rates $(BR)_a$ for the various age groups are tabulated below, as given in Table E-5 of the Regulatory Guide1.109 Revision 1.

Age Group (a)	Breathing Rate (m^3/yr)
Infant	1400
Child	3700
Teen	8000
Adult	8000

Inhalation dose factors $(DFA_i)_a$ for the various age groups are given in Tables E-7 through E-10 of Regulatory Guide 1.109 Revision 1.

B. Ground Plane Pathway

$$R_{iG} = \frac{I_i K' K'' (SF) DFG_i (1-e^{-\lambda t})}{\lambda_i} \qquad 2.5\text{-}4$$

where

R_{iG} = dose factor for the ground plane pathway for each identified radionuclide i for the organ of interest; mrem/yr per µCi/sec per m^{-2};

K' = a constant of unit conversion,

= 10^6 pCi/µCi;

K'' = a constant of unit conversion,

= 8760 hr/yr;

λ_i = the radiological decay constant for radionuclide i, sec^{-1};

t = the exposure time, sec,

= 4.73×10^8 sec (15 years);

DFG_i = the ground plane dose conversion factor for radionuclide i,

mrem/hr per pCi/m^2

SF = the shielding factor (dimensionless);

I_i = factor to account for fractional deposition of radionuclide i.

For radionuclides other than iodine, the factor I_i is equal to one. For radioiodines, the value of I_i may vary. However, a value of 1.0 was used in calculating the R values in Table 7.

A shielding factor of 0.7 is suggested in Table E-15 of Regulatory Guide 1.109 Revision 1. A tabulation of DFG_i values is presented in Table E-6 of Regulatory Guide 1.109 Revision 1.

C. Grass-Cow or Goat-Milk Pathway

$$R_{i_M} = I_i K' Q_F U_{ap} F_m (DFL_i)_a \, e^{-\lambda_i t_f} \left[f_p f_s \left[\frac{r(1-e^{-\lambda_{E_i} t_{ep}})}{Y_p \lambda_{E_i}} \right] + (1-f_p f_s) \left[\frac{r(1-e^{-\lambda_{E_i} t_{es}})}{Y_s \lambda_{E_i}} \right] + e^{-\lambda_i t_h} \right] \qquad 2.5\text{-}5$$

where

R_{i_M} = dose factor for the cow milk or goat milk pathway, for each identified radionuclide i for the organ of interest, mrem/yr per μCi/sec per m^{-2};

K′ = a constant of unit conversion,

= 10^6 pCi/μCi;

Q_F = the cow or goat feed consumption rate, kg/day (wet weight);

U_{ap} = the receptor's milk consumption rate for age group a, liters/yr;

Y_p = the agricultural productivity by unit area of pasture feed grass, kg/m^2

Y_s = the agricultural productivity by unit area of stored feed, kg/m^2

F_m = the stable element transfer coefficients, pCi/liter per pCi/day;

r = fraction of deposited activity retained on cow feed grass;

$(DFL_i)_a$ = the organ ingestion dose factor for radionuclide i for the receptor in age group a, mrem/pCi;

λ_{E_i} = $\lambda_i + \lambda_w$

λ_i = the radiological decay constant for radionuclide i, sec^{-1}

λ_w = the decay constant for removal of activity on leaf and plant surfaces by weathering, sec^{-1},

= 5.73×10^{-7} sec^{-1} (corresponding to a 14 day half-life);

t_f = the transport time from feed to cow or goat, to milk, to receptor, sec;

t_h = the transport time from harvest, to cow or goat, to consumption, sec;

t_b = period of time that activity builds up in soil, sec;

B_{iv} = concentration factor for uptake of radionuclide i from the soil by the edible parts of crops, pCi/kg (wet weight) per pCi/kg (dry soil);

P = effective surface density for soil, kg (dry soil)/m^2;

f_p = fraction of the year that the cow or goat is on pasture;

f_s = fraction of the cow feed that is pasture grass while the cow is on pasture;

t_{ep} = period of pasture grass and crop exposure during the growing season, sec;

t_{es} = period of crop exposure during the growing season (stored feed); sec;

I_i = factor to account for fractional deposition of radionuclide i.

For radionuclides other than iodine, the factor I_i is equal to one. For radioiodines, the value of I_i may vary. However, a value of 1.0 was used in calculating the R values Tables 14 through 21.

Milk cattle and goats are considered to be fed from two potential sources, pasture grass and stored feeds. Following the development in Regulatory Guide 1.109 Revision 1, the value of f_s is considered unity in lieu of site-specific information. The value of f_p is 0.500 based upon an 6 month grazing period.

Appendix C, Table 1 contains the appropriate parameter values and their source in Regulatory Guide 1.109 Revision 1.

The concentration of tritium in milk is based on the airborne concentration rather than the deposition. Therefore, the R_i is based on χ/Q:

$$R_{T_M} = K'K'''F_m Q_F U_{ap} (DFL_i)_a \; 0.75(0.5/H) \qquad 2.5\text{-}6$$

where

R_{T_M} = dose factor for the cow or goat milk pathway for tritium for the organ of interest, mrem/yr per mCi/m^3;

K''' = a constant of conversion,

= 10^3 gm/kg;

H = absolute humidity of the atmosphere, gm/m^3;

0.75 = the fraction of total feed that is water;

0.5 = the ratio of the specific activity of the feed grass water to the atmospheric water;

and the other parameters and values are as given above. A value for H of 8 grams/m^3, was used in lieu of site-specific information.

D. Grass-Cow-Meat Pathway

The integrated concentration in meat follows in a similar manner to the development for the milk pathway, therefore:

$$R_{i_B} = I_i K' Q_F U_{ap} F_m (DFL_i)_a \, e^{-\lambda_i t_f} \left[f_p f_s \left[\frac{r(1-e^{-\lambda_{E_i} t_{ep}})}{Y_p \lambda_{E_i}} \right] + (1-f_p f_s) \left[\frac{r(1-e^{-\lambda_{E_i} t_{es}})}{Y_s \lambda_{E_i}} \right] + e^{-\lambda_i t_h} \right] \qquad 2.5\text{-}7$$

where

R_{i_B} = dose factor for the meat ingestion pathway for radionuclide i for any organ of interest, mRem/yr per µCi/sec per m^{-2};

F_f = the stable element transfer coefficient, pCi/kg per pCi/day;,

U_{ap} = the receptor's milk consumption rate for age group a, liters/yr;

t_s = the transport time from slaughter to meat consumption, sec;

t_h = the transport time from harvest, to animal consumption, sec;

t_{ep} = period of pasture grass exposure during the growing season, sec;

t_{es} = period of crop exposure during the growing season (stored feed); sec;

I_i = factor to account for fractional deposition of radionuclide i.

For radionuclides other than iodine, the factor I_i is equal to one. For radioiodines, the value of I_i may vary. However, a value of 1.0 was used in calculating R values in Tables 11 through 13.

All other terms remain the same as defined in Equation 2.5-5. Appendix C, Table 2 contains the values which were used in calculating R_i for the meat pathway.

The concentration of tritium in meat is based on its airborne concentration rather than the deposition. Therefore, the R_i is based on χ/Q.

$$R_{T_B} = K'K'''F_f Q_F U_{ap}(DFL_i)_a \; 0.75(0.5/H) \qquad 2.5\text{-}8$$

where

R_{T_B} = dose factor for the meat ingestion pathway for tritium for any organ of interest, mrem/yr per mCi/m^3,

All other terms are defined in Equation 2.5-6 and 2.5-7, above.

E. Vegetation Pathway

The integrated concentration in vegetation consumed by man follows the expression developed in the derivation of the milk factor. Man is considered to consume two types of vegetation (fresh and stored) that differ only in the time period between harvest and consumption, therefore:

$$R_{i_v} = I_i K'(DFL_i)_a \left[U_a^L f_L e^{-\lambda_i t_L} \left[\frac{r(1-e^{-\lambda_{E_i} t_e})}{Y_V \lambda_{E_i}} \right] + U_a^S f_g e^{-\lambda_i t_h} \left[\frac{r(1-e^{-\lambda_{E_i} t_e}}{Y_V \lambda_{E_i}} \right] \right] \qquad 2.5\text{-}9$$

where

R_{i_v} = dose factor for vegetable pathway for radionuclide i for the organ of interest, mrem/yr per µCi/sec per m^{-2};

K' = a constant of unit conversion,

= 10^6 pCi/µCi;

U_a^L = the consumption rate of fresh leafy vegetationby the receptor in age group a, kg/yr;

U_a^S = the consumption rate of stored vegetation by the receptor in age group a, kg/yr;

f_L = the fraction of the annual intake of fresh leafy vegetation grown locally;

f_g = the traction of the annual intake of stored vegetation grown locally;

t_L = the average time between harvest of leafy vegetation and its consumption, sec;

t_h = the average time between harvest of stored vegetation and its consumption, sec;

Y_v = the vegetation areal density, kg/m^2;

t_e = period of leafy vegetable exposure during growing season, sec;

I_i = factor to account for fractional deposition of radionuclide i.

For radionuclides other than iodine, the factor I_i is equal to one. For radioiodines, the value of I_i may vary. However, a value of 1.0 was used in calculating the R values in Tables 8 through 10. All other factors were defined above.

Appendix C, Table 3 presents the appropriate parameter values and their source in Regulatory Guide 1.109 Revision 1.

In lieu of site-specific data, default values for f_L and f_g, 1.0 and 0.76, respectively, were used in the calculation of R_i. These values were obtained from Table E-15 of Regulatory Guide 1.109 Revision 1.

The concentration of tritium in vegetation is based on the airborne concentration rather than the deposition. Therefore, the R_i is based on χ/Q:

$$R_{T_v} = K'K'''[U_a^L f_L = U_a^S f_g] (DFL_i)_a \; 0.75(0.5/H) \quad 2.5\text{-}10$$

where

R_{T_v} = dose factor for the vegetable pathway for tritium for any organ of interest, mrem/yr per mCi/m^3,

All other terms remain the same as those in Equations 2.5-6 and 2.5-9.

2.6 References

3. Monticello Nuclear Generating Plant Technical Specifications, TS-B.2.4-Radioactive Effluents, Specification 2.4.3F Rev. 25.

4. USNRC, Title 10, Code of Federal Regulation, Part 50, "Domestic Licensing of Production and Utilization Facilities", Appendix I, "Numerical Guides for Design Objectives and Limiting Conditions for Operation to Meet the Criterion 'As Low as is Reasonably Achievable' for Radioactive Material in Light-Water-Cooled Nuclear Power Reactor Effluents".

5. NSP - Monticello Nuclear Generating Plant, Appendix I Analysis - Supplement No. 1 - Docket No. 50-263, Table 2.1-3.

6. Boegli, J.S., et. al. Eds, "Preparation of Radiological Effluent Technical Specifications for Nuclear Power Plants, NUREG-0133, 1978, NTIS, Springfield Va.

7. Sangendorf, J.F. and J. T. Goll, "XOQDOQ - Program for the Meteorological Evaluation of Routine Effluent Releases at Nuclear Power Stations", NUREG-0324, 1977, USNRC, Washington, D.C.

8. USNRC, Regulatory Guide 1.109, "Calculation of Annual Doses to Man from Routine Releases of Reactor Effluents for the Purpose of Evaluating Compliance with 10 CFR 50, Appendix I", Rev. 1, Oct. 1977, USNRC, Washington.

9. USNRC, Regulatory Guide 1.111, "Methods for Estimating Atmospheric Transport and Dispersion of Gaseous Effluents in Routine Releases from Light-Water-Cooled Reactors", July 1977. USNRC, Washington, D.C.

10. EPA, Title 40, Code of Federal Regulations, Part 190 "Environmental Radiation Protection Standards for Nuclear Power Operations".

Figure 1 Gaseous Radwaste

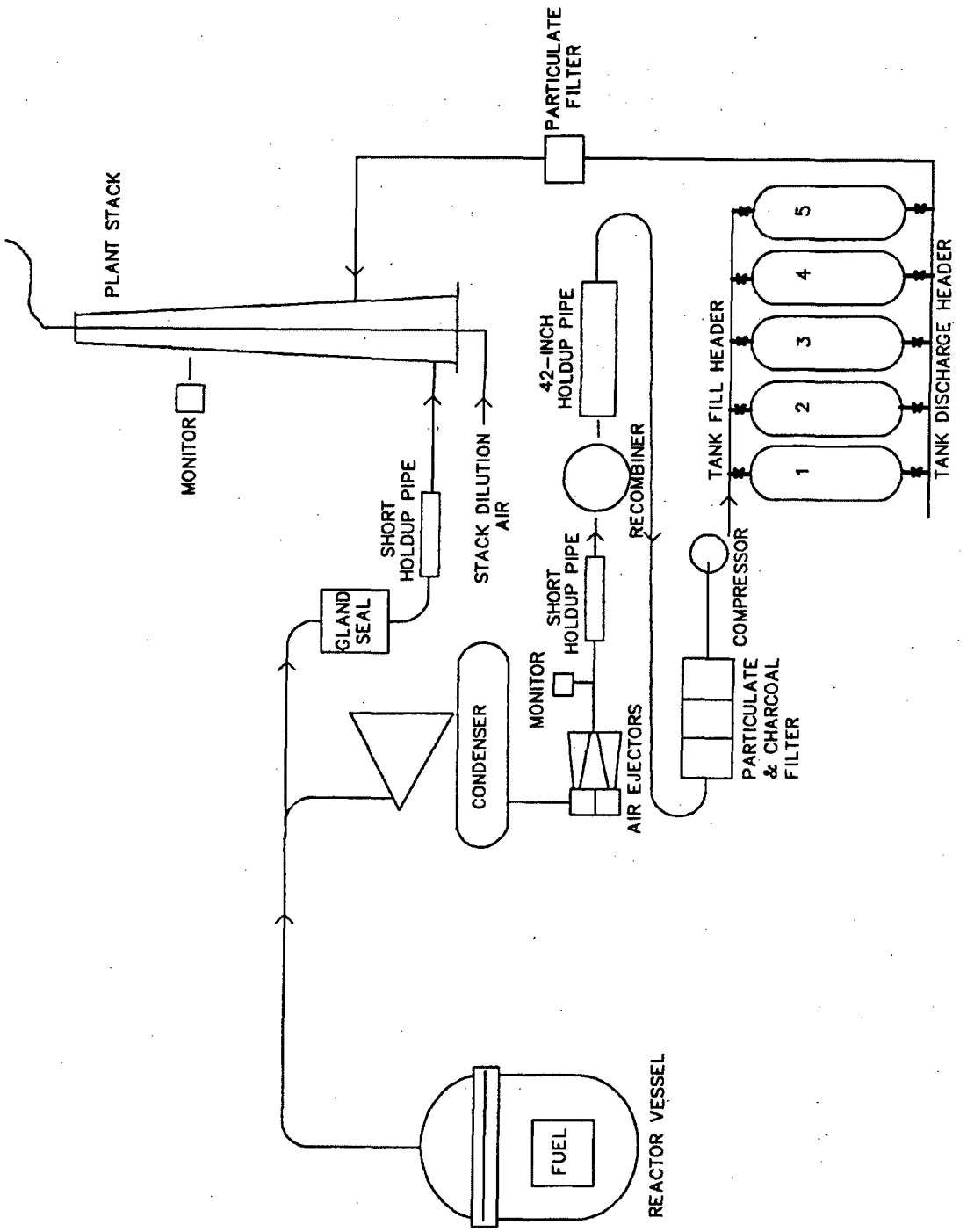

l/jlk

Figure 2 Ventilation System

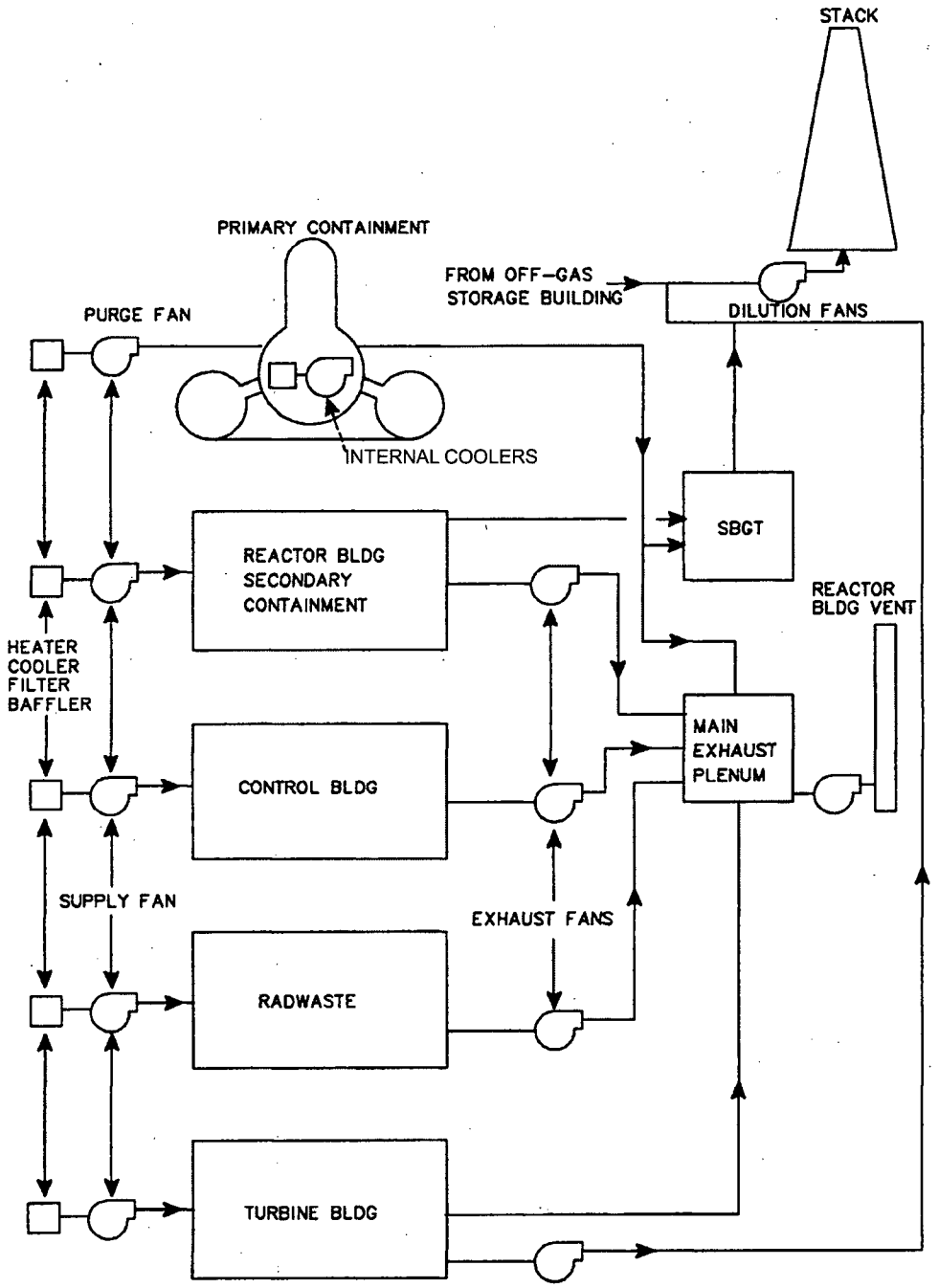

Table 1 Gaseous Source Terms(3) A_i, Ci/yr

Radionuclide	Reactor Building Vent	Gland Seal	Mechanical Vacuum Pump	Gaseous Radwaste	Drywell Purging
Kr-83m	- -	2.3E 01	- -	- -	- -
Kr-85m	7.1E 01	4.1E 01	- -	- -	3.0E 00
Kr-85	- -	- -	- -	1.3E 02	- -
Kr-87	1.33E 02	1.4E 02	- -	- -	3.0E 00
Kr-88	2.33E 02	1.4E 02	- -	- -	3.0E 00
Kr-89	- -	6.0E 02	- -	- -	- -
Kr-90	- -	- -	- -	- -	- -
Xe-131m	- -	- -	- -	4.5E 01	- -
Xe-133m	- -	2.0E 00	- -	2.7E 01	- -
Xe-133	3.26E 02	5.6E 01	2.3E 03	8.9E 03	6.6E 01
Xe-135m	6.96E 02	1.7E 01	- -	- -	4.6E 01
Xe-135	7.09E 02	1.5E 02	3.5E 02	- -	3.4E 01
Xe-137	- -	7.3E 02	- -	- -	- -
Xe-138	1.41E 03	5.6E 02	- -	- -	7.0E 00
Xe-139	- -	- -	- -	- -	- -
Ar-41	- -	- -	- -	- -	- -
Total	3.58E 03	2.46E 03	2.65E 03	9.10E 03	1.62E 02

Table 2 Dose Factors and Constants for the Total Body and Skin for Gaseous Radionuclides

Radionuclide	Total Whole Body Dose Factor K_i (mrem/yr per μCi/m3)	Total Skin Dose Factor $L +_i 1.1M_i$ (mrem/yr per μCi/m3)	Total Body Dose Constant for Long Term Releases V_i (mrem/yr per μCi/sec)
Kr-83m	7.56E-02	2.12E 01	2.61E-09
Kr-85m	1.17E 03	2.81E 03	1.39E-04
Kr-85	1.61E 01	1.36E 03	2.10E-06
Kr-87	5.92E 03	1.65E 04	6.33E-04
Kr-88	1.47E 04	1.91E 04	1.66E-03
Kr-89	1.66E 04	2.91E 04	1.12E-03
Kr-90	1.56E 04	2.52E 04	1.61E-04
Xe-131m	9.15E 01	6.48E 02	3.31E-05
Xe-133m	2.51E 02	1.35E 03	2.51E-05
Xe-133	2.94E 02	6.94E 02	2.61E-05
Xe-135m	3.12E 03	4.41E 03	3.34E-04
Xe-135	1.81E 03	3.97E 03	2.24E-04
Xe-137	1.42E 03	1.39E 04	9.99E-05
Xe-138	8.83E 03	1.43E 04	9.90E-04
Xe-139	5.02E 03	7.10E 04	5.79E-05
Ar-41	8.84E 03	1.29E 04	1.20E-03

Table 2 Dose Factors and Constants for the Total Body and Skin for Gaseous Radionuclides (cont'd)

Radionuclide	Total Body Dose Constant for Short Term Releases v_i (mrem/yr per µCi/sec)	Total Skin Dose Constant for Long Term Releases $L_i(\chi/Q)_s.1.1B_i$* (mrem)/yr per µCi/sec)	Total Dose Constant for Short Term Releases $L_i(\chi/q)_s.1.1b_i$* (mrem)/yr per µCi/sec)
Kr-83m	2.99E-09	4.15E-07	4.75E-07
Kr-85m	1.59E-04	3.90E-04	7.07E-04
Kr-85	2.40E-06	1.52E-04	4.14E-04
Kr-87	7.25E-04	2.13E-03	4.18E-03
Kr-88	1.90E-03	3.00E-03	4.86E-03
Kr-89	1.28E-03	2.97E-03	5.20E-03
Kr-90	1.85E-04	1.08E-03	2.54E-03
Xe-131m	3.79E-05	1.10E-04	2.11E-04
Xe-133m	2.87E-05	1.55E-04	3.56E-04
Xe-133	2.99E-05	7.88E-05	1.45E-04
Xe-135m	3.82E-04	6.36E-04	8.54E-04
Xe-135	2.57E-04	5.77E-04	9.94E-04
Xe-137	1.14E-04	1.52E-03	3.92E-03
Xe-138	1.13E-03	2.10E-03	3.13E-03
Xe-139	6.63E-05	7.33E-03	2.01E-02
Ar-41	1.57E-03	2.28E-03	3.10E-03

* $(\chi/Q)_s$, $(\chi/q)_s$, B_i, and b_i values obtained from other tables in the ODCM.

Table 3 Air Ejector Monitor Trip Setting and Storage Tank Contents Storage Tank Activity in Dose Equivalent Curies Xe-133 12 Hours After Completion of Tank Fill Release Rate Set to 1.00 of Maximum Trip Setting

Recoil/Diff/Eq			Qtot(5 Min)	Qtot(30 Min)	Condenser Air Inleakage, CFM 3	6	9	12	15	18	21	24	27	30
1.0	0.0	0.0	2.149E 06	2.600E 05	956.	1492.	1806.	1970	2045.	2068.	2062.	2039.	2005.	1965.
0.9	0.1	0.0	1.876E 06	2.600E 05	2008.	2459.	2743.	2880.	2923.	2912.	2872.	2815.	2750.	2680.
0.9	0.0	0.1	2.042E 06	2.600E 05	2480.	2585.	2702.	2747.	2738.	2697.	2639.	2572.	2502.	2431.
0.8	0.2	0.0	1.664E 06	2.600E 05	2823.	3206.	3469.	3584.	3602.	3565.	3499.	3416.	3326.	3234.
0.8	0.1	0.1	1.772E 06	2.600E 05	3371.	3444.	3556.	3589.	3558.	3490.	3403.	3308.	3209.	3111.
0.8	0.2	0.2	1.925E 06	2.600E 05	4145.	3779.	3680.	3595.	3495.	3384.	3269.	3155.	3045.	2939.
0.7	0.3	0.0	1.495E 06	2.600E 05	3471.	3802.	4046.	4144.	4143.	4086.	3998.	3895.	3785.	3674.
0.7	0.2	0.1	1.565E 06	2.600E 05	4053.	4102.	4211.	4233.	4186.	4098.	3989.	3871.	3751.	3633.
0.7	0.1	0.2	1.661E 06	2.600E 05	4842.	4507.	4434.	4554.	4243.	4114.	3977.	3840.	3705.	3576.
0.7	0.0	0.3	1.797E 06	2.600E 05	5971.	5088.	4752.	4526.	4325.	4137.	3960.	3794	3640.	3496.
0.6	0.4	0.0	1.385E 06	2.600E 05	4000.	4288.	4517.	4602.	4585.	4510.	4405.	4285.	4160.	4034.
0.6	0.3	0.1	1.402E 06	2.600E 05	4593.	4621.	4728.	4743.	4682.	4578.	4452.	4317.	4180.	4045.
0.6	0.2	0.2	1.460E 06	2.600E 05	5370.	5059.	5005.	4928.	4810.	4667.	4514.	4358.	4206.	4060.
0.6	0.1	0.3	1.540E 06	2.600E 05	6435.	5659.	5383.	5182.	4985.	4789.	4598.	4415.	4242.	4080.
0.6	0.0	0.4	1.655E 06	2.600E 05	7982.	6530.	5934.	5551.	5240.	4967.	4721.	4498.	4295.	4109.
0.5	0.5	0.0	1.243E 06	2.600E 05	4440.	4691.	4909.	4982.	4951.	4862.	4743.	4609.	4471.	4332.
0.5	0.4	0.1	1.270E 06	2.600E 05	5030.	5043.	5148.	5156.	5084.	4967.	4827.	4678.	4527.	4379.
0.5	0.3	0.2	1.303E 06	2.600E 05	5784.	5492.	5453.	5379.	5254.	5101.	4934.	4765.	4599.	4439.
0.5	0.2	0.3	1.347E 06	2.600E 05	6782.	6086.	5856.	5673.	5479.	5278.	5076.	4881.	4694.	4518.
0.5	0.1	0.4	1.408E 06	2.600E 05	8165.	6909.	6415.	6082.	5791.	5523.	5273.	5041.	4826.	4627.
0.5	0.0	0.5	1.498E 06	2.600E 05	10208.	8126.	7241.	6685.	6552.	5885.	5663.	5277.	5021.	4788.
0.4	0.6	0.0	1.147E 06	2.600E 05	4811.	5032.	5240.	5302.	5261.	5160.	5028.	4883.	4733.	4584.
0.4	0.5	0.1	1.160E 06	2.600E 05	5391.	5391.	5494.	5497.	5417.	5289.	5137.	4976.	4814.	4655.
0.4	0.4	0.2	1.176E 06	2.600E 05	6118.	5840.	5813.	5741.	5612.	5450.	5273.	5092.	4915.	4744.
0.4	0.3	0.3	1.197E 06	2.600E 05	7052.	6418.	6223.	6055.	5864.	5657.	5448.	5242.	5045.	4858.
0.4	0.2	0.4	1.225E 06	2.600E 05	8300.	7190.	6771.	6475.	6199.	5934.	5681.	5442.	5218.	5010.
0.4	0.1	0.5	1.265E 06	2.600E 05	10051.	8273.	7540.	7063.	6670.	6322.	6008.	5723.	5462.	5223.
0.4	0.0	0.6	1.324E 06	2.600E 05	12686.	9902.	8697.	7948.	7378.	6907.	6501.	6145.	5828.	5544.

Table 3 Air Ejector Monitor Trip Setting and Storage Tank Contents Storage Tank Activity in Dose Equivalent Curies Xe-133 12 Hours After Completion of Tank Fill Release Rate Set to 1.00 of Maximum Trip Setting (cont'd)

Recoil/Diff/Eq			Qtot(5 Min)	Qtot(30 Min)	Condenser Air Inleakage, CFM 3	6	9	12	15	18	21	24	27	30
0.3	0.7	0.0	1.064E 06	2.600E 05	5148.	5324.	5522.	5577.	5526.	5415.	5273.	5117.	4948.	4800.
0.3	0.6	0.1	1.068E 06	2.600E 05	5695.	5684.	5786.	5784.	5697.	5559.	5398.	5227.	5055.	4887.
0.3	0.5	0.2	1.072E 06	2.600E 05	6392.	6127.	6110.	6040.	5907.	5737.	5551.	5362.	5175.	4995.
0.3	0.4	0.3	1.078E 06	2.600E 05	7268.	6684.	6517.	6361.	6171.	5961.	5744.	5531.	5325.	5129.
0.3	0.3	0.4	1.085E 06	2.600E 05	8404.	7406.	7046.	6777.	6513.	6251.	5995.	5751.	5521.	5304.
0.3	0.2	0.5	1.092E 06	2.600E 05	9937.	8380.	7758.	7338.	6975.	6642.	6333.	6047.	5784.	5540.
0.3	0.1	0.6	1.108E 06	2.600E 05	12115.	9765.	8771.	8136.	7632.	7197.	6813.	6469.	6158.	5876.
0.3	0.0	0.7	1.129E 06	2.600E 05	15459.	11891.	10326.	9361.	8639.	8051.	7550.	7115.	6732.	6391.
0.2	0.8	0.0	9.929E 05	2.600E 05	5403.	5576.	5767.	5814.	5755.	5635.	5484.	5320.	5153.	4987.
0.2	0.7	0.1	9.894E 05	2.600E 05	5954.	5934.	6034.	6029.	5935.	5790.	5620.	5441.	5261.	5085.
0.2	0.6	0.2	9.052E 05	2.600E 05	6621.	6366.	6358.	6289.	6153.	5977.	5784.	5587.	5393.	5204.
0.2	0.5	0.3	9.799E 05	2.600E 05	7444.	6901.	6757.	6610.	6422.	6209.	5987.	5768.	5555.	5352.
0.2	0.4	0.4	9.733E 05	2.600E 05	8487.	7577.	7263.	7017.	6762.	6502.	6244.	5996.	5760.	5538.
0.2	0.3	0.5	9.646E 05	2.600E 05	9849.	8462.	7924.	7548.	7207.	6885.	6508.	6295.	6029.	5782.
0.2	0.2	0.6	9.528E 05	2.600E 05	11706.	9667.	8825.	8272.	7814.	7406.	7038.	6702.	6395.	6114.
0.2	0.1	0.7	9.357E 05	2.600E 05	14384.	11405.	10124.	9316	8689	8159.	7698.	7289.	6923.	6593.
0.2	0.0	0.8	9.090E 05	2.600E 05	18586.	14132.	12163.	10954	10061	9340.	8734.	8210.	7751.	7345.
0.1	0.9	0.0	9.305E 05	2.600E 05	5643.	5796.	5981.	6022.	5955.	5827.	5669.	5497.	5322.	5150.
0.1	0.8	0.1	9.217E 05	2.600E 05	6178.	6149.	6249.	6240.	6141.	5989.	5812.	5625.	5439.	5256.
0.1	0.7	0.2	9.112E 05	2.600E 05	6816.	6570.	6568.	6501.	6362.	6181.	5982.	5778.	5577.	5383.
0.1	0.6	0.3	8.985E 05	2.600E 05	7591.	7082.	6957.	6818.	6631.	6415.	6190.	5964.	5964.	5537.
0.1	0.5	0.4	8.826E 05	2.600E 05	8554.	7717.	7440.	7212.	6995.	6706.	6447.	6195.	5955.	5728.
0.1	0.4	0.5	8.624E 05	2.600E 05	9781.	8526.	8055.	7713.	7309.	7076.	6775.	6490.	6222.	5972.
0.1	0.3	0.6	8.358E 05	2.600E 05	11397.	9593.	8865.	8374.	7951.	7564.	7207.	6877.	6573.	6293.
0.1	0.2	0.7	7.992E 05	2.600E 05	13625.	11062.	9982.	9284.	8723.	8236.	7802.	7411.	7058.	6736.
0.1	0.1	0.8	7.454E 05	2.600E 05	16890.	13216.	11619.	10619.	9856.	9222.	8675.	8194.	7768.	7385.
0.1	0.0	0.9	6.591E 05	2.600E 05	22138.	16679.	14250.	12764.	11676.	10805.	10077.	9453.	8909.	8428.
0.0	1.0	0.0	8.755E 05	2.600E 05	5855.	5990.	6169.	6205.	6132.	5997.	5832.	5653.	5472.	5293.
0.0	0.9	0.1	8.628E 05	2.600E 05	6372.	6336.	6435.	6424.	6320.	6162.	5979.	5786.	5593.	5405.
0.0	0.8	0.2	8.477E 05	2.600E 05	6983.	6745.	6750.	6683.	6542.	6357.	6152.	5943.	5732.	5536.
0.0	0.7	0.3	8.296E 05	2.600E 05	7716.	7235.	7126.	6994.	6808.	6590.	6361.	6131.	5908.	5694.
0.0	0.6	0.4	8.075E 05	2.600E 05	8610.	7832.	7586.	7373.	7133.	6875.	6615.	6360.	6117.	5886.

Table 3 Air Ejector Monitor Trip Setting and Storage Tank Contents Storage Tank Activity in Dose Equivalent Curies Xe-133 12 Hours After Completion of Tank Fill Release Rate Set to 1.00 of Maximum Trip Setting (cont'd)

Recoil/Diff/Eq			Qtot(5 Min)	Qtot(30 Min)	Condenser Air Inleakage, CFM 3	6	9	12	15	18	21	24	27	30
0.0	0.5	0.5	7.799E 05	2.600E 05	9725	8578.	8160.	7846.	7538.	7231.	6932.	6647.	6378.	6126.
0.0	0.4	0.6	7.446E 05	2.600E 05	11156.	9533.	8897.	8454.	8058.	7687.	7339.	7014.	6713.	6433.
0.0	0.3	0.7	6.976E 05	2.600E 05	13059.	10807.	9876.	9261.	8749.	8293.	7880.	7508.	7158.	6843.
0.0	0.2	0.8	6.320E 05	2.600E 05	15713.	12581.	11241.	10386.	9713.	9139.	8634.	8184.	7779.	7413.
0.0	0.1	0.9	5.342E 05	2.600E 05	19670.	15227.	13277.	12065.	11151.	10401.	9759.	9200.	8705.	8264.
0.0	0.0	1.0	3.727E 05	2.600E 05	26207.	19597.	16640.	14838.	13527.	12484.	11617.	10878.	10235.	9670.

Table 4 Child Critical Organ Dose Parameters for Radionuclide i for the Inhalation Pathway

Nuclide	P_{i}^{I} mrem/yr µCi/m³
H-3	1.12E 03
Cr-51	1.70E 04
Mn-54	1.58E 06
Fe-59	1.27E 06
Co-58	1.11E 06
Co-60	7.07E 06
Zn-65	9.95E 05
Rb-86	1.98E 05
Sr-89	2.16E 06
Sr-90	1.01E 08
Y-91	2.63E 06
Zr-95	2.23E 06
Nb-95	6.14E 05
Ru-103	6.62E 05
Ru-106	1.43E 07
Ag-110m	5.48E 06
Te-127m	1.48E 06
Te-129m	1.76E 06
Cs-134	1.01E 06
Cs-136	1.71E 05
Cs-137	9.07E 05
Ba-140	1.74E 06
Ce-141	5.44E 05
Ce-144	1.20E 07
I-131	1.62E 07
I-133	3.85E 06
I-135	7.92E 05

Table 5 Dose Factors for Noble Gases and Daughters That May Be Detected in Gaseous Effluents

Radionuclide	Total Body Dose Factor K_i mrem/yr µCi/m³	Skin Dose Factor L_i mrem/yr µCi/m³	Gamma Air Dose Factor M_i mrad/yr µCi/m³	Beta Air Dose Factor N_i mrad/yr µCi/m³
Kr-83m	7.56E-02	--	1.93E+01	2.88E+02
Kr-85m	1.17E+03	1.46E+03	1.23E+03	1.97E+03
Kr-85	1.61E+01	1.34E+03	1.72E+01	1.95E+03
Kr-87	5.92E+03	9.73E+03	6.17E+03	1.03E+04
Kr-88	1.47E+04	2.37E+03	1.52E+04	2.93E+03
Kr-89	1.66E+04	1.01E+04	1.73E+04	1.06E+04
Kr-90	1.56E+04	7.29E+03	1.63E+04	7.83E+03
Xe-131m	9.15E+01	4.76E+02	1.56E+02	1.11E+03
Xe-133m	2.51E+02	9.94E+02	3.27E+02	1.48E+03
Xe-133	2.94E+02	3.06E+02	3.53E+02	1.05E+03
Xe-135m	3.12E+03	7.11E+02	3.36E+03	7.39E+02
Xe-135	1.81E+03	1.86E+03	1.92E+03	2.46E+03
Xe-137	1.42E+03	1.22E+04	1.51E+03	1.27E+04
Xe-138	8.83E+03	4.13E+03	9.21E+03	4.75E+03
Xe-139	5.02E+03	6.52E+04	5.28E+03	6.52E+04
Ar-41	8.84E+03	2.69E+03	9.30E+03	3.28E+03

Table 6 Dose Parameters for Finite Evaluated Plumes for the Critical Boundary Location 0.51 mi from the Stack in the SSE Sector

	Long Term Release*		Short Term Release**	
Noble Gas Radionuclide	Total Body V_i mrem/yr / Ci/sec	Gamma Air B_i mrad/yr / Ci/sec	Total Body v_i mrem/yr / Ci/sec	Gamma Air b_i mrad/yr / Ci/sec
Kr-83m	2.61E-09	3.77E-07	2.99E-09	4.32E-07
Kr-85m	1.39E-04	2.07E-04	1.59E-04	2.37E-04
Kr-85	2.10E-06	3.18E-06	2.40E-06	3.64E-06
Kr-87	6.33E-04	9.52E-04	7.25E-02	1.09E-03
Kr-88	1.66E-03	2.49E-03	1.90E-03	2.85E-03
Kr-89	1.12E-03	1.68E-03	1.28E-03	1.92E-03
Kr-90	1.61E-04	2.42E-04	1.85E-04	2.78E-04
Xe-131m	3.31E-05	5.21E-05	3.79E-05	5.97E-05
Xe-133m	2.51E-05	4.09E-05	2.87E-05	4.68E-05
Xe-133	2.61E-05	4.08E-05	2.99E-05	4.67E-05
Xe-135m	3.34E-04	5.06E-04	3.82E-04	5.79E-04
Xe-135	2.24E-04	3.37E-04	2.57E-04	3.89E-04
Xe-137	9.99E-05	1.51E-04	1.14E-04	1.73E-04
Xe-138	9.90E-04	1.49E-03	1.13E-03	1.70E-03
Xe-139	5.79E-05	8.69E-05	6.63E-05	9.95E-05
Ar-41	1.20E-03	1.80E-03	1.38E-03	2.07E-03

* Values are annual average

** Values are for 144 hours per year purge.

Table 7 R_i Values for the Monticello Nuclear Generating Plant Ground Pathway

Nuclide	T. Body	GI Tract	Bone	Liver	Kidney	Thyroid	Lung	Skin
Cr-51	4.66E 06	4.66E 06	4.66E 06	4.66E 06	4.66E 06	4.66E 06	4.66E 06	5.51E 06
Mn-54	1.34E 09	1.34E 09	1.34E 09	1.34E 09	1.34E 09	1.34E 09	1.34E 09	1.57E 09
Fe-59	2.75E 08	2.75E 08	2.75E 08	2.75E 08	2.75E 08	2.75E 08	2.75E 08	3.23E 08
Co-58	3.79E 08	3.79E 08	3.79E 08	3.79E 08	3.79E 08	3.79E 08	3.79E 08	4.44E 08
Co-60	2.15E 10	2.15E 10	2.15E 10	2.15E 10	2.15E 10	2.15E 10	2.15E 10	2.52E 10
Zn-65	7.49E 08	7.49E 08	7.49E 08	7.49E 08	7.49E 08	7.49E 08	7.49E 08	8.69E 10
Sr-89	2.23E 04	2.23E 04	2.23E 04	2.23E 04	2.23E 04	2.23E 04	2.23E 04	2.58E 04
Zr-95	2.49E 08	2.49E 08	2.49E 08	2.49E 08	2.49E 08	2.49E 08	2.49E 08	2.89E 08
I-131	1.72E 07	1.72E 07	1.72E 07	1.72E 07	1.72E 07	1.72E 07	1.72E 07	2.09E 07
I-133	2.47E 06	2.47E 06	2.47E 06	2.47E 06	2.47E 06	2.47E 06	2.47E 06	3.00E 06
I-135	2.52E 06	2.52E 06	2.52E 06	2.52E 06	2.52E 06	2.52E 06	2.52E 06	2.94E 06
Cs-134	6.82E 09	6.82E 09	6.82E 09	6.82E 09	6.82E 09	6.82E 09	6.82E 09	7.96E 09
Cs-136	1.49E 08	1.49E 08	1.49E 08	1.49E 08	1.49E 08	1.49E 08	1.49E 08	1.69E 08
Cs-137	1.03E 10	1.03E 10	1.03E 10	1.03E 10	1.03E 10	1.03E 10	1.03E 10	1.20E 10
Ba-140	2.05E 07	2.05E 07	2.05E 07	2.05E 07	2.05E 07	2.05E 07	2.05E 07	2.34E 07
Ce-141	1.36E 07	1.36E 07	1.36E 07	1.36E 07	1.36E 07	1.36E 07	1.36E 07	1.53E 07
Ce-144	6.96E 07	6.96E 07	6.96E 07	6.96E 07	6.96E 07	6.96E 07	6.96E 07	8.04E 07
Nb-95	1.36E 08	1.36E 08	1.36E 08	1.36E 08	1.36E 08	1.36E 08	1.36E 08	1.60E 08
Ru-103	1.08E 08	1.08E 08	1.08E 08	1.08E 08	1.08E 08	1.08E 08	1.08E 08	1.26E 08

* R_i values are in units of mRem/yr per $\mu Ci/m^3$ for inhalation and tritium, and in units of m^2 mRem/yr per $\mu Ci/Sec$ for all others.

Table 8 R_i Values for the Monticello Nuclear Generating Plant Vegetable Pathway Adult Age Group

Nuclide	T. Body	GI Tract	Bone	Liver	Kidney	Thyroid	Lung	Skin
H-3	2.28E 03	2.28E 03	0.00E 00	2.28E 03	2.28E 03	2.28E 03	2.28E 03	2.28E 03
Cr-51	4.60E 04	1.16E 07	0.00E 00	0.00E 00	1.01E 04	2.75E 04	6.10E 04	0.00E 00
Mn-54	5.83E 07	9.36E 08	0.00E 00	3.05E 08	9.09E 07	0.00E 00	0.00E 00	0.00E 00
Fe-59	1.12E 08	9.75E 08	1.24E 08	2.93E 08	0.00E 00	0.00E 00	8.17E 07	0.00E 00
Co-58	6.71E 07	6.07E 08	0.00E 00	2.99E 07	0.00E 00	0.00E 00	0.00E 00	0.00E 00
Co-60	3.67E 08	3.12E 09	0.00E 00	1.66E 08	0.00E 00	0.00E 00	0.00E 00	0.00E 00
Zn-65	5.77E 08	8.04E 08	4.01E 08	1.28E 09	8.54E 08	0.00E 00	0.00E 00	0.00E 00
Sr-89	2.87E 08	1.60E 09	1.00E 10	0.00E 00	0.00E 00	0.00E 00	0.00E 00	0.00E 00
Sr-90	1.64E 11	1.93E 10	6.70E 11	0.00E 00	0.00E 00	0.00E 00	0.00E 00	0.00E 00
Zr-95	2.51E 05	1.17E 09	1.16E 06	3.71E 05	5.82E 05	0.00E 00	0.00E 00	0.00E 00
I-131	6.61E 07	3.04E 07	8.07E 07	1.15E 08	1.98E 08	3.78E 10	0.00E 00	0.00E 00
I-133	1.12E 06	3.30E 06	2.11E 06	3.67E 06	6.40E 06	5.39E 09	0.00E 00	0.00E 00
I-135	3.73E 04	1.14E 05	3.86E 04	1.01E 05	1.62E 05	6.67E 06	0.00E 00	0.00E 00
Cs-134	8.83E 09	1.89E 08	4.54E 09	1.08E 10	3.49E 09	0.00E 00	1.16E 09	0.00E 00
Cs-136	1.19E 08	1.88E 07	4.19E 07	1.66E 08	9.21E 07	0.00E 00	1.26E 07	0.00E 00
Cs-137	5.94E 08	1.76E 08	6.63E 09	9.07E 09	3.08E 09	0.00E 00	1.02E 09	0.00E 00
Ba-140	8.40E 06	2.64E 08	1.28E 08	1.61E 05	5.47E 04	0.00E 00	9.22E 04	0.00E 00
Ce-141	1.48E 04	4.99E 08	1.93E 05	1.31E 05	6.07E 04	0.00E 00	0.00E 00	0.00E 00
Ce-144	1.69E 06	1.07E 10	3.15E 07	1.32E 07	7.82E 06	0.00E 00	0.00E 00	0.00E 00
Nb-95	4.19E 04	4.73E 08	1.40E 05	7.80E 04	7.71E 04	0.00E 00	0.00E 00	0.00E 00
Ru-103	2.03E 06	5.51E 08	4.72E 06	0.00E 00	1.80E 07	0.00E 00	0.00E 00	0.00E 00

* R_i values are in units of mRem/yr per $\mu Ci/m^3$ for inhalation and tritium, and in units of m^2 mRem/yr per μCi/Sec for all others.

Table 9 R_i Values for the Monticello Nuclear Generating Plant Vegetable Pathway Teen Age Group

Nuclide	T. Body	GI Tract	Bone	Liver	Kidney	Thyroid	Lung	Skin
H-3	2.61E 03	2.61E 03	0.00E 00	2.61E 03	2.61E 03	2.61E 03	2.61E 03	2.61E 03
Cr-51	6.11E 04	1.03E 07	0.00E 00	0.00E 00	1.34E 04	3.39E 04	8.72E 04	0.00E 00
Mn-54	8.79E 07	9.09E 08	0.00E 00	4.43E 08	1.32E 08	0.00E 00	0.00E 00	0.00E 00
Fe-59	1.60E 08	9.78E 08	1.77E 08	4.14E 08	0.00E 00	0.00E 00	1.30E 08	0.00E 00
Co-58	9.79E 07	5.85E 08	0.00E 00	4.25E 07	0.00E 00	0.00E 00	0.00E 00	0.00E 00
Co-60	5.57E 08	3.22E 09	0.00E 00	2.47E 08	0.00E 00	0.00E 00	0.00E 00	0.00E 00
Zn-65	8.68E 08	7.88E 08	5.36E 08	1.86E 09	1.19E 08	0.00E 00	0.00E 00	0.00E 00
Sr-89	4.36E 08	1.81E 09	1.52E 10	0.00E 00	0.00E 00	0.00E 00	0.00E 00	0.00E 00
Sr-90	2.05E 11	2.33E 10	8.32E 11	0.00E 00	0.00E 00	0.00E 00	0.00E 00	0.00E 00
Zr-95	3.68E 05	1.23E 09	1.69E 06	5.35E 05	7.86E 05	0.00E 00	0.00E 00	0.00E 00
I-131	5.77E 07	2.13E 07	7.68E 07	1.07E 08	1.85E 08	3.14E 10	0.00E 00	0.00E 00
I-133	1.01E 06	2.51E 06	1.96E 06	3.32E 06	5.83E 06	4.64E 08	0.00E 00	0.00E 00
I-135	3.33E 04	9.96E 04	3.49E 04	8.98E 04	1.42E 05	5.78E 06	0.00E 00	0.00E 00
Cs-134	7.54E 09	2.02E 08	6.90E 09	1.62E 10	5.16E 10	0.00E 00	1.97E 09	0.00E 00
Cs-136	1.13E 08	1.35E 07	4.28E 07	1.68E 08	9.16E 07	0.00E 00	1.44E 07	0.00E 00
Cs-137	4.90E 09	2.00E 08	1.06E 10	1.41E 10	4.78E 09	0.00E 00	1.86E 09	0.00E 00
Ba-140	8.88E 06	2.12E 08	1.38E 08	1.69E 05	5.72E 04	0.00E 00	1.14E 05	0.00E 00
Ce-141	2.12E 04	5.29E 08	2.77E 05	1.85E 05	8.70E 04	0.00E 00	0.00E 00	0.00E 00
Ce-144	2.72E 06	1.27E 10	5.05E 07	2.09E 07	1.25E 07	0.00E 00	0.00E 00	0.00E 00
Nb-95	5.78E 04	4.49E 08	1.89E 05	1.05E 05	1.02E 05	0.00E 00	0.00E 00	0.00E 00
Ru-103	2.88E 06	5.64E 08	6.75E 06	0.00E 00	2.38E 07	0.00E 00	0.00E 00	0.00E 00

* R_i values are in units of mRem/yr per $\mu Ci/m^3$ for inhalation and tritium, and in units of m^2 mRem/yr per $\mu Ci/Sec$ for all others.

Table 10 R_i Values for the Monticello Nuclear Generating Plant Vegetable Pathway Child Age Group

Nuclide	T. Body	GI Tract	Bone	Liver	Kidney	Thyroid	Lung	Skin
H-3	4.04E 03	4.04E 03	0.00E 00	4.04E 03	4.04E 03	4.04E 03	4.04E 03	4.04E 03
Cr-51	1.16E 05	6.15E 06	0.00E 00	0.00E 00	1.76E 04	6.44E 04	1.18E 05	0.00E 00
Mn-54	1.73E 08	5.44E 08	0.00E 00	6.49E 08	1.82E 08	0.00E 00	0.00E 00	0.00E 00
Fe-59	3.17E 08	6.62E 08	3.93E 08	6.36E 08	0.00E 00	0.00E 00	1.84E 08	0.00E 00
Co-58	1.92E 08	3.66E 08	0.00E 00	6.27E 07	0.00E 00	0.00E 00	0.00E 00	0.00E 00
Co-60	1.11E 09	2.08E 09	0.00E 00	3.76E 08	0.00E 00	0.00E 00	0.00E 00	0.00E 00
Zn-65	1.70E 09	4.81E 08	1.03E 09	2.74E 09	1.73E 09	0.00E 00	0.00E 00	0.00E 00
Sr-89	1.03E 09	1.40E 09	3.62E 10	0.00E 00	0.00E 00	0.00E 00	0.00E 00	0.00E 00
Sr-90	3.49E 11	1.86E 10	1.38E 12	0.00E 00	0.00E 00	0.00E 00	0.00E 00	0.00E 00
Zr-95	7.44E 05	8.71E 08	3.80E 06	8.35E 05	1.20E 05	0.00E 00	0.00E 00	0.00E 00
I-131	8.16E 07	1.28E 07	1.43E 08	1.44E 08	2.36E 08	4.75E 10	0.00E 00	0.00E 00
I-133	1.67E 06	1.78E 06	3.57E 06	4.42E 06	7.36E 06	8.21E 08	0.00E 00	0.00E 00
I-135	5.28E 04	8.50E 04	6.20E 04	1.12E 05	1.71E 05	9.88E 06	0.00E 00	0.00E 00
Cs-134	5.40E 09	1.38E 08	1.56E 10	2.56E 10	7.93E 09	0.00E 00	2.84E 09	0.00E 00
Cs-136	1.43E 08	7.77E 06	8.04E 07	2.21E 08	1.18E 08	0.00E 00	1.76E 07	0.00E 00
Cs-137	3.52E 09	1.50E 08	2.40E 10	2.39E 10	7.78E 09	0.00E 00	2.80E 09	0.00E 00
Ba-140	1.61E 07	1.40E 08	2.76E 08	2.42E 05	7.87E 04	0.00E 00	1.44E 05	0.00E 00
Ce-141	4.75E 04	3.39E 08	6.42E 05	3.20E 05	1.40E 05	0.00E 00	0.00E 00	0.00E 00
Ce-144	6.50E 06	9.95E 09	1.22E 08	3.82E 07	2.11E 07	0.00E 00	0.00E 00	0.00E 00
Nb-95	1.12E 05	2.91E 08	4.04E 05	1.57E 05	1.48E 05	0.00E 00	0.00E 00	0.00E 00
Ru-103	5.83E 06	3.82E 08	1.52E 07	0.00E 00	3.82E 07	0.00E 00	0.00E 00	0.00E 00

* R_i values are in units of mRem/yr per $\mu Ci/m^3$ for inhalation and tritium, and in units of m^2 mRem/yr per $\mu Ci/Sec$ for all others.

Table 11 R_i Values for the Monticello Nuclear Generating Plant Meat Pathway Adult Age Group

Nuclide	T. Body	GI Tract	Bone	Liver	Kidney	Thyroid	Lung	Skin
H-3	3.27E 02	3.27E 02	0.00E 00	3.27E 02	3.27E 02	3.27E 02	3.27E 02	3.27E 02
Cr-51	3.26E 03	8.21E 05	0.00E 00	0.00E 00	7.19E 02	1.95E 03	4.33E 03	0.00E 00
Mn-54	8.98E 05	1.44E 07	0.00E 00	4.71E 06	1.40E 06	0.00E 00	0.00E 00	0.00E 00
Fe-59	1.12E 08	9.73E 08	1.24E 08	2.92E 08	0.00E 00	0.00E 00	8.16E 07	0.00E 00
Co-58	1.95E 07	1.76E 08	0.00E 00	8.68E 06	0.00E 00	0.00E 00	0.00E 00	0.00E 00
Co-60	8.87E 07	7.55E 08	0.00E 00	4.02E 07	0.00E 00	0.00E 00	0.00E 00	0.00E 00
Zn-65	3.06E 08	4.27E 08	2.13E 08	6.78E 08	4.53E 08	0.00E 00	0.00E 00	0.00E 00
Sr-89	4.12E 06	2.30E 07	1.43E 08	0.00E 00	0.00E 00	0.00E 00	0.00E 00	0.00E 00
Sr-90	1.76E 09	2.07E 08	7.17E 09	0.00E 00	0.00E 00	0.00E 00	0.00E 00	0.00E 00
Zr-95	1.94E 05	9.07E 08	8.92E 05	2.86E 05	4.49E 05	0.00E 00	0.00E 00	0.00E 00
I-131	4.33E 06	1.99E 06	5.28E 06	7.55E 06	1.29E 07	2.48E 09	0.00E 00	0.00E 00
I-133	1.13E-01	3.34E-01	2.14E-01	3.72E-01	6.49E-01	5.46E 01	0.00E 00	0.00E 00
I-135	1.78E-17	5.38E-17	1.82E-17	4.77E-17	7.64E-17	3.14E-15	0.00E 00	0.00E 00
Cs-134	6.68E 08	1.43E 07	3.43E 08	8.17E 08	2.64E 08	0.00E 00	8.78E 07	0.00E 00
Cs-136	1.61E 07	2.53E 06	5.65E 06	2.23E 07	1.24E 07	0.00E 00	1.70E 06	0.00E 00
Cs-137	4.33E 08	1.28E 07	4.83E 08	6.61E 08	2.24E 08	0.00E 00	7.46E 07	0.00E 00
Ba-140	9.01E 05	2.83E 07	1.38E 07	1.73E 04	5.87E 03	0.00E 00	9.89E 03	0.00E 00
Ce-141	4.96E 02	1.67E 07	6.47E 03	4.38E 03	2.03E 03	0.00E 00	0.00E 00	0.00E 00
Ce-144	3.94E 04	2.48E 08	7.34E 05	3.07E 05	1.82E 05	0.00E 00	0.00E 00	0.00E 00
Nb-95	3.00E 05	3.39E 09	1.01E 06	5.59E 05	5.52E 05	0.00E 00	0.00E 00	0.00E 00
Ru-103	2.00E 07	5.42E 09	4.64E 07	0.00E 00	1.77E 08	0.00E 00	0.00E 00	0.00E 00

* R_i values are in units of mRem/yr per $\mu Ci/m^3$ for inhalation and tritium, and in units of m^2 mRem/yr per $\mu Ci/Sec$ for all others.

Table 12 R_i Values for the Monticello Nuclear Generating Plant Meat Pathway Teen Age Group

Nuclide	T. Body	GI Tract	Bone	Liver	Kidney	Thyroid	Lung	Skin
H-3	1.95E 02	1.95E 02	0.00E 00	1.95E 02	1.95E 02	1.95E 02	1.95E 02	1.95E 02
Cr-51	2.61E 03	4.39E 05	0.00E 00	0.00E 00	5.72E 02	1.45E 03	3.75E 03	0.00E 00
Mn-54	7.12E 05	7.37E 06	0.00E 00	3.59E 06	1.07E 06	0.00E 00	0.00E 00	0.00E 00
Fe-59	8.95E 07	5.48E 08	9.93E 07	2.32E 08	0.00E 00	0.00E 00	7.31E 07	0.00E 00
Co-58	1.54E 07	9.22E 07	0.00E 00	6.69E 06	0.00E 00	0.00E 00	0.00E 00	0.00E 00
Co-60	7.03E 07	4.06E 08	0.00E 00	3.12E 07	0.00E 00	0.00E 00	0.00E 00	0.00E 00
Zn-65	2.43E 08	2.20E 08	1.50E 08	5.20E 08	3.33E 08	0.00E 00	0.00E 00	0.00E 00
Sr-89	3.47E 06	1.44E 07	1.21E 08	0.00E 00	0.00E 00	0.00E 00	0.00E 00	0.00E 00
Sr-90	1.15E 09	1.30E 08	4.64E 09	0.00E 00	0.00E 00	0.00E 00	0.00E 00	0.00E 00
Zr-95	1.55E 05	5.02E 08	7.15E 05	2.25E 05	3.31E 05	0.00E 00	0.00E 00	0.00E 00
I-131	3.30E 06	1.22E 06	4.39E 06	6.14E 06	1.06E 07	1.79E 09	0.00E 00	0.00E 00
I-133	9.25E-02	2.30E-01	1.79E-01	3.03E-01	5.32E-01	4.23E 01	0.00E 00	0.00E 00
I-135	1.41E-17	4.22E-17	1.48E-17	3.81E-17	6.02E-17	2.45E-17	0.00E 00	0.00E 00
Cs-134	2.98E 08	7.99E 06	2.73E 08	6.42E 08	2.04E 08	0.00E 00	7.79E 07	0.00E 00
Cs-136	1.16E 07	1.40E 06	4.41E 06	1.73E 07	9.44E 06	0.00E 00	1.49E 06	0.00E 00
Cs-137	1.86E 08	7.59E 06	4.01E 08	5.34E 08	1.82E 08	0.00E 00	7.06E 07	0.00E 00
Ba-140	7.33E 05	1.75E 07	1.14E 07	1.39E 04	4.72E 03	0.00E 00	9.37E 03	0.00E 00
Ce-141	4.17E 02	1.04E 07	5.43E 03	3.63E 03	1.71E 03	0.00E 00	0.00E 00	0.00E 00
Ce-144	3.32E 04	1.56E 08	6.18E 05	2.56E 05	1.53E 05	0.00E 00	0.00E 00	0.00E 00
Nb-95	2.39E 05	1.86E 09	7.84E 05	4.35E 05	4.22E 05	0.00E 00	0.00E 00	0.00E 00
Ru-103	1.62E 07	3.16E 09	3.79E 07	0.00E 00	1.33E 08	0.00E 00	0.00E 00	0.00E 00

* R_i values are in units of mRem/yr per $\mu Ci/m^3$ for inhalation and tritium, and in units of m^2 mRem/yr per $\mu Ci/Sec$ for all others.

Table 13 R_i Values for the Monticello Nuclear Generating Plant Meat Pathway Child Age Group

Nuclide	T. Body	GI Tract	Bone	Liver	Kidney	Thyroid	Lung	Skin
H-3	2.36E 02	2.36E 02	0.00E 00	2.36E 02	2.36E 02	2.36E 02	2.36E 02	2.36E 02
Cr-51	4.07E 03	2.16E 05	0.00E 00	0.00E 00	6.17E 02	2.26E 03	4.12E 03	0.00E 00
Mn-54	1.09E 05	3.45E 06	0.00E 00	4.11E 06	1.15E 06	0.00E 00	0.00E 00	0.00E 00
Fe-59	1.42E 08	2.79E 08	1.76E 08	2.85E 08	0.00E 00	0.00E 00	8.26E 07	0.00E 00
Co-58	2.39E 07	4.56E 07	0.00E 00	7.82E 06	0.00E 00	0.00E 00	0.00E 00	0.00E 00
Co-60	1.09E 08	2.05E 08	0.00E 00	3.70E 07	0.00E 00	0.00E 00	0.00E 00	0.00E 00
Zn-65	3.72E 08	1.05E 08	2.25E 08	5.99E 08	3.77E 08	0.00E 00	0.00E 00	0.00E 00
Sr-89	6.55E 06	8.87E 06	2.29E 08	0.00E 00	0.00E 00	0.00E 00	0.00E 00	0.00E 00
Sr-90	1.52E 09	8.08E 07	6.00E 09	0.00E 00	0.00E 00	0.00E 00	0.00E 00	0.00E 00
Zr-95	2.48E 05	2.91E 08	1.27E 06	2.79E 05	3.99E 05	0.00E 00	0.00E 00	0.00E 00
I-131	4.65E 06	7.29E 05	8.14E 06	8.19E 06	1.34E 07	2.71E 09	0.00E 00	0.00E 00
I-133	1.55E 01	1.66E 01	3.32E 01	4.11E 01	6.85E 01	7.63E 01	0.00E 00	0.00E 00
I-135	2.28E 17	3.67E 17	2.68E 17	4.82E 17	7.39E 17	4.27E 15	0.00E 00	0.00E 00
Cs-134	1.67E 08	4.26E 06	4.81E 08	7.90E 08	2.45E 08	0.00E 00	8.78E 07	0.00E 00
Cs-136	1.35E 07	7.34E 05	7.60E 06	2.09E 07	1.11E 07	0.00E 00	1.66E 06	0.00E 00
Cs-137	1.04E 08	4.43E 06	7.39E 08	7.07E 08	2.30E 08	0.00E 00	8.29E 07	0.00E 00
Ba-140	1.22E 06	1.06E 07	2.10E 07	1.84E 04	5.98E 03	0.00E 00	1.10E 04	0.00E 00
Ce-141	7.57E 02	6.36E 06	1.02E 04	5.10E 03	2.24E 03	0.00E 00	0.00E 00	0.00E 00
Ce-144	6.22E 04	9.53E 09	1.17E 06	3.66E 05	2.02E 05	0.00E 00	0.00E 00	0.00E 00
Nb-95	3.77E 05	9.74E 08	1.35E 06	5.27E 05	4.95E 05	0.00E 00	0.00E 00	0.00E 00
Ru-103	2.63E 07	1.77E 09	6.83E 07	0.00E 00	1.72E 08	0.00E 00	0.00E 00	0.00E 00

* R_i values are in units of mRem/yr per $\mu Ci/m^3$ for inhalation and tritium, and in units of m^2 mRem/yr per $\mu Ci/Sec$ for all others.

Table 14. R_i Values for the Monticello Nuclear Generating Plant Cow Milk Pathway Adult Age Group

Nuclide	T. Body	GI Tract	Bone	Liver	Kidney	Thyroid	Lung	Skin
H-3								
Cr-51	1.32E 04	3.32E 06	0.00E 00	0.00E 00	2.91E 03	7.90E 03	1.75E 04	0.00E 00
Mn-54	8.25E 05	1.32E 07	0.00E 00	4.32E 06	1.29E 06	0.00E 00	0.00E 00	0.00E 00
Fe-59	1.25E 07	1.09E 08	1.39E 07	3.26E 07	0.00E 00	0.00E 00	9.10E 06	0.00E 00
Co-58	5.03E 06	4.55E 07	0.00E 00	2.24E 06	0.00E 00	0.00E 00	0.00E 00	0.00E 00
Co-60	1.93E 07	1.65E 08	0.00E 00	8.77E 06	0.00E 00	0.00E 00	0.00E 00	0.00E 00
Zn-65	1.18E 09	1.65E 09	8.21E 08	2.61E 09	1.75E 09	0.00E 00	0.00E 00	0.00E 00
Sr-89	1.97E 07	1.10E 08	6.85E 08	0.00E 00	0.00E 00	0.00E 00	0.00E 00	0.00E 00
Sr-90	6.62E 09	7.80E 08	2.70E 10	0.00E 00	0.00E 00	0.00E 00	0.00E 00	0.00E 00
Zr-95	9.72E 01	4.55E 05	4.48E 02	1.44E 02	2.25E 02	0.00E 00	0.00E 00	0.00E 00
I-131	1.19E 08	5.49E 07	1.45E 08	2.08E 08	3.57E 08	6.82E 10	0.00E 00	0.00E 00
I-133	1.05E 06	3.09E 06	1.98E 06	3.44E 06	6.01E 06	5.06E 08	0.00E 00	0.00E 00
I-135	5.70E 03	1.74E 04	5.90E 03	1.54E 04	2.48E 04	1.02E 06	0.00E 00	0.00E 00
Cs-134	5.74E 09	1.23E 08	2.95E 09	7.02E 09	2.27E 09	0.00E 00	7.54E 08	0.00E 00
Cs-136	3.35E 08	5.60E 07	1.25E 08	4.93E 08	2.74E 08	0.00E 00	3.76E 07	0.00E 00
Cs-137	3.66E 09	1.08E 08	4.09E 09	5.59E 09	1.90E 09	0.00E 00	6.31E 08	0.00E 00
Ba-140	8.43E 05	2.65E 07	1.29E 07	1.62E 04	5.49E 03	0.00E 00	9.25E 03	0.00E 00
Ce-141	1.71E 02	5.78E 06	2.24E 03	1.51E 03	7.02E 02	0.00E 00	0.00E 00	0.00E 00
Ce-144	4.67E 03	6.09E 07	1.80E 05	7.53E 04	4.46E 04	0.00E 00	0.00E 00	0.00E 00
Nb-95	1.08E 04	1.22E 08	3.60E 04	2.01E 04	1.98E 04	0.00E 00	0.00E 00	0.00E 00
Ru-103	1.93E 02	5.24E 04	4.49E 02	0.00E 00	1.71E 03	0.00E 00	0.00E 00	0.00E 00

* R_i values are in units of mRem/yr per $\mu Ci/m^3$ for inhalation and tritium, and in units of m^2 mRem/yr per $\mu Ci/Sec$ for all others.

Table 15 R_i Values for the Monticello Nuclear Generating Plant Cow Milk Pathway Teen Age Group

Nuclide	T. Body	GI Tract	Bone	Liver	Kidney	Thyroid	Lung	Skin
H-3	1.00E 03	1.00E 03	0.00E 00	1.00E 03	1.00E 03	1.00E 03	1.00E 03	1.00E 03
Cr-51	2.31E 04	3.88E 06	0.00E 00	0.00E 00	5.06E 03	1.28E 04	3.30E 04	0.00E 00
Mn-54	1.43E 06	1.48E 07	0.00E 00	7.20E 06	2.15E 06	0.00E 00	0.00E 00	0.00E 00
Fe-59	2.18E 07	1.34E 08	2.42E 07	5.65E 07	0.00E 00	0.00E 00	1.78E 07	0.00E 00
Co-58	8.70E 06	5.12E 07	0.00E 00	3.78E 06	0.00E 00	0.00E 00	0.00E 00	0.00E 00
Co-60	3.35E 07	1.94E 08	0.00E 00	1.49E 07	0.00E 00	0.00E 00	0.00E 00	0.00E 00
Zn-65	2.04E 09	1.85E 09	1.26E 09	4.38E 09	2.80E 09	0.00E 00	0.00E 00	0.00E 00
Sr-89	3.62E 07	1.50E 08	1.26E 09	0.00E 00	0.00E 00	0.00E 00	0.00E 00	0.00E 00
Sr-90	9.42E 09	1.07E 09	3.81E 10	0.00E 00	0.00E 00	0.00E 00	0.00E 00	0.00E 00
Zr-95	1.70E 02	5.70E 05	7.83E 02	2.47E 02	3.63E 02	0.00E 00	0.00E 00	0.00E 00
I-131	1.98E 08	7.31E 07	2.64E 08	3.69E 08	6.36E 08	1.08E 11	0.00E 00	0.00E 00
I-133	1.87E 06	4.64E 06	3.61E 06	6.13E 06	1.08E 07	8.56E 08	0.00E 00	0.00E 00
I-135	9.99E 03	2.99E 04	1.05E 04	2.70E 04	4.26E 04	1.74E 06	0.00E 00	0.00E 00
Cs-134	5.60E 09	1.50E 08	5.12E 09	1.21E 10	3.83E 09	0.00E 00	1.46E 09	0.00E 00
Cs-136	5.62E 08	6.73E 07	2.13E 08	8.37E 08	4.55E 08	0.00E 00	7.18E 07	0.00E 00
Cs-137	3.44E 09	1.40E 08	7.42E 09	9.87E 09	3.36E 09	0.00E 00	1.30E 09	0.00E 00
Ba-140	1.50E 06	3.58E 07	2.32E 07	2.84E 04	9.65E 03	0.00E 00	1.91E 04	0.00E 00
Ce-141	3.14E 02	7.83E 06	4.10E 03	2.74E 03	1.29E 03	0.00E 00	0.00E 00	0.00E 00
Ce-144	1.78E 04	8.33E 07	3.31E 05	1.37E 05	8.19E 04	0.00E 00	0.00E 00	0.00E 00
Nb-95	1.88E 04	1.46E 07	6.16E 04	3.42E 04	3.31E 04	0.00E 00	0.00E 00	0.00E 00
Ru-103	3.41E 02	6.67E 04	7.99E 02	0.00E 00	2.82E 03	0.00E 00	0.00E 00	0.00E 00

* R_i values are in units of mRem/yr per $\mu Ci/m^3$ for inhalation and tritium, and in units of m^2 mRem/yr per $\mu Ci/Sec$ for all others.

Table 16 R_i Values for the Monticello Nuclear Generating Plant Cow Milk Pathway Child Age Group

Nuclide	T. Body	GI Tract	Bone	Liver	Kidney	Thyroid	Lung	Skin
H-3	1.58E 03	1.58E 03	0.00E 00	1.58E 03	1.58E 03	1.58E 03	1.58E 03	1.58E 03
Cr-51	4.71E 04	2.50E 06	0.00E 00	0.00E 00	7.14E 03	2.61E 04	4.77E 04	0.00E 00
Mn-54	2.87E 06	9.04E 06	0.00E 00	1.08E 07	3.02E 06	0.00E 00	0.00E 00	0.00E 00
Fe-59	4.52E 07	9.45E 07	5.61E 07	9.08E 07	0.00E 00	0.00E 00	2.63E 07	0.00E 00
Co-58	1.77E 07	3.37E 07	0.00E 00	5.77E 06	0.00E 00	0.00E 00	0.00E 00	0.00E 00
Co-60	6.81E 07	1.28E 08	0.00E 00	2.31E 07	0.00E 00	0.00E 00	0.00E 00	0.00E 00
Zn-65	4.10E 09	1.16E 09	2.47E 09	6.59E 09	4.15E 09	0.00E 00	0.00E 00	0.00E 00
Sr-89	8.93E 07	1.21E 08	3.13E 09	0.00E 00	0.00E 00	0.00E 00	0.00E 00	0.00E 00
Sr-90	1.63E 10	8.68E 08	6.44E 10	0.00E 00	0.00E 00	0.00E 00	0.00E 00	0.00E 00
Zr-95	3.56E 02	4.17E 05	1.82E 03	4.00E 02	5.72E 02	0.00E 00	0.00E 00	0.00E 00
I-131	3.66E 08	5.73E 07	6.40E 08	6.44E 08	1.06E 09	2.13E 11	0.00E 00	0.00E 00
I-133	4.11E 06	4.38E 06	8.78E 06	1.09E 07	1.81E 07	2.02E 09	0.00E 00	0.00E 00
I-135	2.11E 04	3.40E 04	2.48E 04	4.46E 04	6.85E 04	3.95E 06	0.00E 00	0.00E 00
Cs-134	4.09E 09	1.05E 08	1.18E 10	1.94E 10	6.01E 09	0.00E 00	2.16E 09	0.00E 00
Cs-136	8.53E 08	4.63E 07	4.80E 08	1.32E 09	7.02E 08	0.00E 00	1.05E 08	0.00E 00
Cs-137	2.52E 09	1.07E 08	1.79E 10	1.71E 10	5.57E 09	0.00E 00	2.00E 09	0.00E 00
Ba-140	3.27E 06	2.84E 07	5.60E 07	4.91E 04	1.60E 04	0.00E 00	2.93E 04	0.00E 00
Ce-141	7.47E 02	6.28E 06	1.01E 04	5.03E 03	2.21E 03	0.00E 00	0.00E 00	0.00E 00
Ce-144	4.36E 04	6.68E 07	8.17E 05	2.56E 05	1.42E 05	0.00E 00	0.00E 00	0.00E 00
Nb-95	3.87E 04	1.00E 08	1.39E 05	5.41E 04	5.09E 04	0.00E 00	0.00E 00	0.00E 00
Ru-103	7.26E 02	4.88E 04	1.89E 03	0.00E 00	4.75E 03	0.00E 00	0.00E 00	0.00E 00

* R_i values are in units of mRem/yr per $\mu Ci/m^3$ for inhalation and tritium, and in units of m^2 mRem/yr per $\mu Ci/Sec$ for all others.

Table 17 R_i Values for the Monticello Nuclear Generating Plant Cow Milk Pathway Infant Age Group

Nuclide	T. Body	GI Tract	Bone	Liver	Kidney	Thyroid	Lung	Skin
H-3	2.40E 03	2.40E 03	0.00E 00	2.40E 03	2.40E 03	2.40E 03	2.40E 03	2.40E 03
Cr-51	7.46E 04	2.17E 06	0.00E 00	0.00E 00	1.06E 04	4.87E 04	9.47E 04	0.00E 00
Mn-54	4.54E 06	7.36E 06	0.00E 00	2.00E 07	4.44E 06	0.00E 00	0.00E 00	0.00E 00
Fe-59	7.21E 07	8.74E 07	1.05E 08	1.83E 08	0.00E 00	0.00E 00	5.41E 07	0.00E 00
Co-58	2.88E 07	2.88E 07	0.00E 00	1.15E 07	0.00E 00	0.00E 00	0.00E 00	0.00E 00
Co-60	1.11E 08	1.12E 08	0.00E 00	4.71E 07	0.00E 00	0.00E 00	0.00E 00	0.00E 00
Zn-65	5.26E 09	9.63E 09	3.32E 09	1.14E 10	5.53E 09	0.00E 00	0.00E 00	0.00E 00
Sr-89	1.70E 08	1.22E 08	5.94E 09	0.00E 00	0.00E 00	0.00E 00	0.00E 00	0.00E 00
Sr-90	1.79E 10	8.75E 08	7.01E 10	0.00E 00	0.00E 00	0.00E 00	0.00E 00	0.00E 00
Zr-95	5.58E 02	3.92E 05	3.23E 03	7.87E 02	8.48E 02	0.00E 00	0.00E 00	0.00E 00
I-131	6.92E 08	5.62E 07	1.34E 09	1.57E 09	1.84E 09	5.17E 11	0.00E 00	0.00E 00
I-133	7.91E 06	4.57E 06	1.85E 07	2.70E 07	3.17E 07	4.91E 09	0.00E 00	0.00E 00
I-135	3.74E 04	3.71E 04	5.16E 04	1.03E 05	1.14E 05	9.20E 06	0.00E 00	0.00E 00
Cs-134	3.59E 09	9.65E 07	1.90E 10	3.55E 10	9.14E 09	0.00E 00	3.75E 09	0.00E 00
Cs-136	1.03E 09	4.19E 07	9.37E 08	2.76E 09	1.10E 09	0.00E 00	2.25E 08	0.00E 00
Cs-137	2.37E 09	1.04E 08	2.85E 10	3.34E 10	8.96E 09	0.00E 00	3.63E 09	0.00E 00
Ba-140	5.94E 06	2.83E 07	1.15E 08	1.15E 05	2.74E 04	0.00E 00	7.08E 04	0.00E 00
Ce-141	1.44E 03	6.30E 06	2.00E 04	1.22E 04	3.76E 03	0.00E 00	0.00E 00	0.00E 00
Ce-144	6.56E 04	6.72E 07	1.17E 06	4.79E 05	1.94E 05	0.00E 00	0.00E 00	0.00E 00
Nb-95	6.18E 09	9.02E 07	2.59E 05	1.07E 05	7.66E 04	0.00E 00	0.00E 00	0.00E 00
Ru-103	1.28E 03	4.65E 04	3.82E 03	0.00E 00	7.96E 03	0.00E 00	0.00E 00	0.00E 00

* R_i values are in units of mRem/yr per $\mu Ci/m^3$ for inhalation and tritium, and in units of m^2 mRem/yr per $\mu Ci/Sec$ for all others.

Table 18 R_i Values for the Monticello Nuclear Generating Plant Goat Milk Pathway Adult Age Group

Nuclide	T. Body	GI Tract	Bone	Liver	Kidney	Thyroid	Lung	Skin
H-3	1.57E 03	1.57E 03	0.00E 00	1.57E 03	1.57E 03	1.57E 03	1.57E 03	1.57E 03
Cr-51	1.59E 03	3.99E 05	0.00E 00	0.00E 00	3.49E 02	9.48E 02	2.11E 03	0.00E 00
Mn-54	9.89E 04	1.59E 06	0.00E 00	0.00E 00	1.59E 05	9.48E 02	0.00E 00	0.00E 00
Fe-59	1.62E 05	1.41E 06	1.80E 05	4.23E 05	0.00E 00	0.00E 00	1.18E 05	0.00E 00
Co-58	6.03E 05	5.46E 06	0.00E 00	2.69E 05	0.00E 00	0.00E 00	0.00E 00	0.00E 00
Co-60	2.32E 06	1.98E 07	0.00E 00	1.05E 06	0.00E 00	0.00E 00	0.00E 00	0.00E 00
Zn-65	1.42E 08	1.97E 08	9.85E 07	3.14E 08	2.10E 08	0.00E 00	0.00E 00	0.00E 00
Sr-89	4.13E 07	2.31E 08	1.44E 09	0.00E 00	0.00E 00	0.00E 00	0.00E 00	0.00E 00
Sr-90	1.39E 10	1.64E 09	5.67E 10	0.00E 00	0.00E 00	0.00E 00	0.00E 00	0.00E 00
Zr-95	1.17E 01	5.46E 04	5.37E 01	1.72E 01	2.70E 01	0.00E 00	0.00E 00	0.00E 00
I-131	1.43E 08	6.59E 07	1.74E 08	2.50E 08	4.28E 08	8.18E 10	0.00E 00	0.00E 00
I-133	1.26E 06	3.71E 06	2.37E 06	4.13E 06	7.21E 06	6.07E 08	0.00E 00	0.00E 00
I-135	6.83E 03	2.09E 04	7.08E 03	1.85E 04	2.97E 04	1.22E 06	0.00E 00	0.00E 00
Cs-134	1.72E 10	3.69E 08	8.85E 09	2.11E 10	6.82E 09	0.00E 00	2.26E 09	0.00E 00
Cs-136	1.06E 09	1.68E 08	3.75E 08	1.48E 09	8.25E 08	0.00E 00	1.13E 08	0.00E 00
Cs-137	1.10E 10	3.25E 08	1.23E 10	1.68E 10	5.70E 09	0.00E 00	1.89E 09	0.00E 00
Ba-140	1.01E 05	3.18E 06	1.54E 06	1.94E 03	6.59E 02	0.00E 00	1.11E 03	0.00E 00
Ce-141	2.06E 01	6.94E 05	2.68E 02	1.81E 02	8.43E 01	0.00E 00	0.00E 00	0.00E 00
Ce-144	0.00E 00	0.00E 00	0.00E 00	0.00E 00	0.00E 00	0.00E 00	0.00E 00	0.00E 00
Nb-95	0.00E 00	0.00E 00	0.00E 00	0.00E 00	0.00E 00	0.00E 00	0.00E 00	0.00E 00
Ru-103	0.00E 00	0.00E 00	0.00E 00	0.00E 00	0.00E 00	0.00E 00	0.00E 00	0.00E 00

* R_i values are in units of mRem/yr per $\mu Ci/m^3$ for inhalation and tritium, and in units of m^2 mRem/yr per $\mu Ci/Sec$ for all others.

Table 19 R_i Values for the Monticello Nuclear Generating Plant Goat Milk Pathway Teen Age Group

Nuclide	T. Body	GI Tract	Bone	Liver	Kidney	Thyroid	Lung	Skin
H-3	2.04E 03	2.04E 03	0.00E 00	2.04E 03	2.04E 03	2.04E 03	2.04E 03	2.04E 03
Cr-51	2.77E 03	4.66E 05	0.00E 00	0.00E 00	6.07E 02	1.54E 02	3.95E 03	0.00E 00
Mn-54	1.71E 05	1.77E 06	0.00E 00	8.64E 05	2.58E 05	0.00E 00	0.00E 00	0.00E 00
Fe-59	2.83E 05	1.74E 06	3.14E 05	7.34E 05	0.00E 00	0.00E 00	2.31E 05	0.00E 00
Co-58	1.04E 06	6.25E 06	0.00E 00	4.53E 05	0.00E 00	0.00E 00	0.00E 00	0.00E 00
Co-60	4.02E 06	2.32E 07	0.00E 00	1.78E 06	0.00E 00	0.00E 00	0.00E 00	0.00E 00
Zn-65	2.45E 08	2.22E 08	1.51E 08	5.25E 08	3.36E 08	0.00E 00	0.00E 00	0.00E 00
Sr-89	7.59E 07	3.16E 08	2.65E 09	0.00E 00	0.00E 00	0.00E 00	0.00E 00	0.00E 00
Sr-90	1.98E 10	2.25E 09	8.01E 10	0.00E 00	0.00E 00	0.00E 00	0.00E 00	0.00E 00
Zr-95	2.04E 01	6.84E 04	9.40E 01	2.97E 01	4.36E 01	0.00E 00	0.00E 00	0.00E 00
I-131	2.38E 08	8.77E 07	3.17E 08	4.43E 08	7.63E 08	1.29E 11	0.00E 00	0.00E 00
I-133	2.24E 06	5.57E 06	4.34E 06	7.36E 06	1.29E 07	1.03E 09	0.00E 00	0.00E 00
I-135	1.20E 04	3.59E 04	1.26E 04	3.24E 04	5.11E 04	2.08E 06	0.00E 00	0.00E 00
Cs-134	1.68E 10	4.50E 08	1.54E 10	3.62E 10	1.15E 10	0.00E 00	4.39E 09	0.00E 00
Cs-136	1.69E 09	2.02E 08	6.38E 08	2.51E 09	1.37E 09	0.00E 00	2.15E 08	0.00E 00
Cs-137	1.03E 10	4.21E 08	2.22E 10	2.96E 10	1.01E 01	0.00E 00	3.91E 09	0.00E 00
Ba-140	1.80E 05	4.30E 06	2.79E 06	3.41E 03	1.16E 03	0.00E 00	2.30E 03	0.00E 00
Ce-141	3.77E 01	9.39E 05	4.92E 02	3.28E 02	1.55E 02	0.00E 00	0.00E 00	0.00E 00
Ce-144	0.00E 00	0.00E 00	0.00E 00	0.00E 00	0.00E 00	0.00E 00	0.00E 00	0.00E 00
Nb-95	0.00E 00	0.00E 00	0.00E 00	0.00E 00	0.00E 00	0.00E 00	0.00E 00	0.00E 00
Ru-103	0.00E 00	0.00E 00	0.00E 00	0.00E 00	0.00E 00	0.00E 00	0.00E 00	0.00E 00

* R_i values are in units of mRem/yr per $\mu Ci/m^3$ for inhalation and tritium, and in units of m^2 mRem/yr per $\mu Ci/Sec$ for all others.

Table 20 R_i Values for the Monticello Nuclear Generating Plant Goat Milk Pathway Child Age Group

Nuclide	T. Body	GI Tract	Bone	Liver	Kidney	Thyroid	Lung	Skin
H-3	3.23E 03	3.23E 03	0.00E 00	3.23E 03	3.23E 03	3.23E 03	3.23E 03	3.23E 03
Cr-51	5.65E 03	3.00E 05	0.00E 00	0.00E 00	8.57E 02	3.14E 03	5.73E 03	0.00E 00
Mn-54	3.44E 05	1.08E 06	0.00E 00	1.29E 06	3.62E 05	0.00E 00	0.00E 00	0.00E 00
Fe-59	5.88E 05	1.23E 06	7.29E 05	1.18E 05	0.00E 00	0.00E 00	3.42E 05	0.00E 00
Co-58	2.12E 06	4.04E 06	0.00E 00	6.92E 05	0.00E 00	0.00E 00	0.00E 00	0.00E 00
Co-60	8.17E 06	1.53E 07	0.00E 00	2.77E 06	0.00E 00	0.00E 00	0.00E 00	0.00E 00
Zn-65	4.92E 08	1.39E 08	2.97E 08	7.19E 08	4.98E 08	0.00E 00	0.00E 00	0.00E 00
Sr-89	1.87E 08	2.54E 08	6.56E 09	0.00E 00	0.00E 00	0.00E 00	0.00E 00	0.00E 00
Sr-90	3.43E 10	1.82E 09	1.35E 11	0.00E 00	0.00E 00	0.00E 00	0.00E 00	0.00E 00
Zr-95	4.27E 01	5.01E 04	2.18E 02	4.80E 01	6.87E 01	0.00E 00	0.00E 00	0.00E 00
I-131	4.39E 08	6.88E 07	7.68E 08	7.72E 08	1.27E 09	2.55E 11	0.00E 00	0.00E 00
I-133	4.93E 06	5.25E 06	1.05E 07	1.30E 07	2.17E 07	2.42E 09	0.00E 00	0.00E 00
I-135	2.53E 04	4.08E 04	2.98E 04	5.36E 04	8.22E 04	4.74E 06	0.00E 00	0.00E 00
Cs-134	1.23E 10	3.14E 08	3.55E 10	5.82E 10	1.80E 10	0.00E 00	6.47E 09	0.00E 00
Cs-136	2.56E 09	1.39E 08	1.44E 09	3.96E 09	2.11E 09	0.00E 00	3.14E 08	0.00E 00
Cs-137	7.57E 09	3.21E 08	5.36E 10	5.13E 10	1.67E 10	0.00E 00	6.01E 09	0.00E 00
Ba-140	3.92E 05	3.41E 06	6.72E 06	5.89E 03	1.92E 03	0.00E 00	3.51E 03	0.00E 00
Ce-141	8.97E 01	7.45E 05	1.21E 03	6.04E 02	2.65E 02	0.00E 00	0.00E 00	0.00E 00
Ce-144	0.00E 00	0.00E 00	0.00E 00	0.00E 00	0.00E 00	0.00E 00	0.00E 00	0.00E 00
Nb-95	0.00E 00	0.00E 00	0.00E 00	0.00E 00	0.00E 00	0.00E 00	0.00E 00	0.00E 00
Ru-103	0.00E 00	0.00E 00	0.00E 00	0.00E 00	0.00E 00	0.00E 00	0.00E 00	0.00E 00

* R_i values are in units of mRem/yr per $\mu Ci/m^3$ for inhalation and tritium, and in units of m^2 mRem/yr per $\mu Ci/Sec$ for all others.

Table 21 R_i Values for the Monticello Nuclear Generating Plant Goat Milk Pathway Infant Age Group

Nuclide	T. Body	GI Tract	Bone	Liver	Kidney	Thyroid	Lung	Skin
H-3	4.90E 03	4.90E 03	0.00E 00	4.90E 03	4.90E 03	4.90E 03	4.90E 03	4.90E 03
Cr-51	8.95E 03	2.61E 05	0.00E 00	0.00E 00	1.28E 03	5.84E 03	1.14E 04	0.00E 00
Mn-54	5.45E 05	8.83E 06	0.00E 00	2.40E 06	5.33E 05	0.00E 00	0.00E 00	0.00E 00
Fe-59	9.37E 05	1.14E 06	1.36E 06	2.38E 06	0.00E 00	0.00E 00	7.03E 05	0.00E 00
Co-58	3.45E 06	3.45E 06	0.00E 00	1.38E 06	0.00E 00	0.00E 00	0.00E 00	0.00E 00
Co-60	1.34E 07	1.35E 07	0.00E 00	5.65E 06	0.00E 00	0.00E 00	0.00E 00	0.00E 00
Zn-65	6.31E 08	1.16E 09	3.99E 08	1.37E 09	6.63E 08	0.00E 00	0.00E 00	0.00E 00
Sr-89	3.58E 08	2.57E 08	1.25E 10	0.00E 00	0.00E 00	0.00E 00	0.00E 00	0.00E 00
Sr-90	3.75E 10	1.84E 09	1.47E 11	0.00E 00	0.00E 00	0.00E 00	0.00E 00	0.00E 00
Zr-95	6.70E 01	4.70E 04	3.88E 02	9.45E 01	1.02E 02	0.00E 00	0.00E 00	0.00E 00
I-131	8.31E 08	6.74E 07	1.60E 09	1.89E 09	2.21E 09	6.21E 11	0.00E 00	0.00E 00
I-133	9.49E 06	5.48E 06	2.23E 07	3.24E 07	3.81E 07	5.89E 09	0.00E 00	0.00E 00
I-135	4.49E 04	4.46E 04	6.19E 04	1.23E 05	1.37E 05	1.10E 07	0.00E 00	0.00E 00
Cs-134	1.08E 10	2.89E 08	5.71E 10	1.07E 11	2.74E 10	0.00E 00	1.12E 10	0.00E 00
Cs-136	3.09E 09	1.26E 08	2.81E 09	8.27E 09	3.30E 09	0.00E 00	6.74E 08	0.00E 00
Cs-137	7.10E 09	3.13E 08	8.55E 10	1.00E 11	2.69E 10	0.00E 00	1.09E 10	0.00E 00
Ba-140	7.13E 05	3.40E 06	1.38E 04	1.38E 07	3.29E 03	0.00E 00	8.50E 03	0.00E 00
Ce-141	1.72E 02	7.57E 05	2.40E 03	1.46E 03	4.52E 02	0.00E 00	0.00E 00	0.00E 00
Ce-144	0.00E 00	0.00E 00	0.00E 00	0.00E 00	0.00E 00	0.00E 00	0.00E 00	0.00E 00
Nb-95	0.00E 00	0.00E 00	0.00E 00	0.00E 00	0.00E 00	0.00E 00	0.00E 00	0.00E 00
Ru-103	0.00E 00	0.00E 00	0.00E 00	0.00E 00	0.00E 00	0.00E 00	0.00E 00	0.00E 00

* R_i values are in units of mRem/yr per $\mu Ci/m^3$ for inhalation and tritium, and in units of m^2 mRem/yr per $\mu Ci/Sec$ for all others.

Table 22 R_i Values for the Monticello Nuclear Generating Plant Inhalation Pathway Adult Age Group

Nuclide	T. Body	GI Tract	Bone	Liver	Kidney	Thyroid	Lung	Skin
H-3	1.26E 03	1.26E 03	0.00E 00	1.26E 03	1.26E 03	1.26E 03	1.26E 03	1.26E 03
Cr-51	9.99E 01	3.32E 03	0.00E 00	0.00E 00	2.28E 01	5.94E 01	1.44E 04	0.00E 00
Mn-54	6.29E 03	7.72E 04	0.00E 00	3.95E 04	9.83E 03	0.00E 00	4.10E 06	0.00E 00
Fe-59	1.05E 04	1.88E 05	1.17E 04	2.77E 04	0.00E 00	0.00E 00	1.01E 06	0.00E 00
Co-58	2.07E 03	1.06E 05	0.00E 00	1.58E 03	0.00E 00	0.00E 00	9.27E 05	0.00E 00
Co-60	1.48E 04	2.84E 05	0.00E 00	1.15E 04	0.00E 00	0.00E 00	5.96E 06	0.00E 00
Zn-65	4.65E 04	5.34E 04	3.24E 04	1.03E 05	6.89E 04	0.00E 00	8.63E 05	0.00E 00
Sr-89	8.71E 03	3.49E 05	3.04E 05	0.00E 00	0.00E 00	0.00E 00	1.40E 06	0.00E 00
Sr-90	6.09E 06	7.21E 05	9.91E 07	0.00E 00	0.00E 00	0.00E 00	9.59E 06	0.00E 00
Zr-95	2.32E 04	1.50E 05	1.07E 05	3.44E 04	5.41E 04	0.00E 00	1.77E 06	0.00E 00
I-131	2.05E 04	6.27E 03	2.52E 04	3.57E 04	6.12E 04	1.19E 07	0.00E 00	0.00E 00
I-133	4.51E 03	8.87E 03	8.63E 03	1.48E 04	2.58E 04	2.15E 06	0.00E 00	0.00E 00
I-135	2.57E 03	5.25E 03	2.68E 03	6.98E 03	1.11E 04	4.48E 05	0.00E 00	0.00E 00
Cs-134	7.27E 05	1.04E 04	3.72E 05	8.47E 05	2.87E 05	0.00E 00	9.75E 04	0.00E 00
Cs-136	1.10E 05	1.17E 04	3.90E 04	1.46E 05	8.55E 04	0.00E 00	1.20E 04	0.00E 00
Cs-137	4.27E 05	8.39E 03	4.78E 05	6.20E 05	2.22E 05	0.00E 00	7.51E 04	0.00E 00
Ba-140	2.56E 03	2.18E 05	3.90E 04	4.90E 01	1.67E 01	0.00E 00	1.27E 06	0.00E 00
Ce-141	1.53E 03	1.20E 05	1.99E 04	1.35E 04	6.25E 03	0.00E 00	3.61E 05	0.00E 00
Ce-144	1.84E 05	8.16E 05	3.43E 06	1.43E 06	8.48E 05	0.00E 00	7.78E 06	0.00E 00
Nb-95	4.21E 03	1.04E 05	1.41E 03	7.82E 03	7.72E 03	0.00E 00	5.05E 05	0.00E 00
Ru-103	6.58E 02	1.10E 05	1.53E 03	0.00E 00	5.83E 03	0.00E 00	5.05E 05	0.00E 00

* R_i values are in units of mRem/yr per $\mu Ci/m^3$ for inhalation and tritium, and in units of m^2 mRem/yr per $\mu Ci/Sec$ for all others.

Table 23 R_i Values for the Monticello Nuclear Generating Plant Inhalation Pathway Teen Age Group

Nuclide	T. Body	GI Tract	Bone	Liver	Kidney	Thyroid	Lung	Skin
H-3	1.27E 03	1.27E 03	0.00E 00	1.27E 03	1.27E 03	1.27E 03	1.27E 03	1.27E 03
Cr-51	1.35E 02	3.00E 03	0.00E 00	0.00E 00	3.07E 01	7.49E 01	2.09E 04	0.00E 00
Mn-54	8.39E 03	6.67E 04	0.00E 00	5.10E 04	1.27E 04	0.00E 00	1.98E 06	0.00E 00
Fe-59	1.43E 04	1.78E 05	1.59E 04	3.69E 04	0.00E 00	0.00E 00	1.53E 06	0.00E 00
Co-58	2.77E 03	9.51E 04	0.00E 00	2.07E 03	0.00E 00	0.00E 00	1.34E 06	0.00E 00
Co-60	1.98E 04	2.59E 05	0.00E 00	1.51E 04	0.00E 00	0.00E 00	8.71E 06	0.00E 00
Zn-65	6.23E 04	4.66E 04	3.85E 04	1.33E 05	8.63E 04	0.00E 00	1.24E 06	0.00E 00
Sr-89	1.25E 04	3.71E 05	4.34E 05	0.00E 00	0.00E 00	0.00E 00	2.41E 06	0.00E 00
Sr-90	6.67E 06	7.64E 05	1.08E 08	0.00E 00	0.00E 00	0.00E 00	1.65E 07	0.00E 00
Zr-95	3.15E 04	1.49E 05	1.45E 05	4.58E 04	6.73E 04	0.00E 00	2.68E 06	0.00E 00
I-131	2.64E 04	6.48E 03	3.54E 04	4.90E 04	8.39E 04	1.46E 07	0.00E 00	0.00E 00
I-133	6.21E 03	1.03E 04	1.21E 04	2.05E 04	3.59E 04	2.92E 06	0.00E 00	0.00E 00
I-135	3.49E 03	6.95E 03	3.70E 03	9.44E 03	1.49E 04	6.21E 05	0.00E 00	0.00E 00
Cs-134	5.48E 05	9.75E 03	5.02E 05	1.13E 05	3.75E 05	0.00E 00	1.46E 05	0.00E 00
Cs-136	1.37E 05	1.09E 04	5.14E 04	1.93E 05	1.10E 05	0.00E 00	1.77E 04	0.00E 00
Cs-137	3.11E 05	8.47E 03	6.69E 05	8.47E 05	3.04E 05	0.00E 00	1.21E 05	0.00E 00
Ba-140	3.51E 03	2.28E 05	5.46E 04	6.69E 01	2.28E 01	0.00E 00	2.03E 06	0.00E 00
Ce-141	2.16E 03	1.26E 05	2.84E 04	1.89E 04	8.87E 03	0.00E 00	6.13E 05	0.00E 00
Ce-144	2.62E 05	8.64E 05	4.89E 06	2.02E 06	1.21E 06	0.00E 00	1.34E 07	0.00E 00
Nb-95	5.66E 03	9.68E 04	1.86E 04	1.03E 04	1.00E 04	0.00E 00	7.51E 05	0.00E 00
Ru-103	8.96E 02	1.09E 05	2.10E 03	0.00E 00	7.43E 03	0.00E 00	7.83E 05	0.00E 00

* R_i values are in units of mRem/yr per $\mu Ci/m^3$ for inhalation and tritium, and in units of m^2 mRem/yr per $\mu Ci/Sec$ for all others.

Table 24 R_i Values for the Monticello Nuclear Generating Plant Inhalation Pathway Child Age Group

Nuclide	T. Body	GI Tract	Bone	Liver	Kidney	Thyroid	Lung	Skin
H-3	1.21E 03	1.12E 03	0.00E 00	1.12E 03	1.12E 03	1.12E 03	1.12E 03	1.12E 03
Cr-51	1.54E 02	1.08E 03	0.00E 00	0.00E 00	2.43E 01	8.53E 01	1.70E 04	0.00E 00
Mn-54	9.50E 03	2.29E 04	0.00E 00	4.29E 04	1.00E 04	0.00E 00	1.57E 06	0.00E 00
Fe-59	1.67E 04	7.06E 04	2.07E 04	3.34E 04	0.00E 00	0.00E 00	1.27E 06	0.00E 00
Co-58	3.16E 03	3.43E 04	0.00E 00	1.77E 03	0.00E 00	0.00E 00	1.10E 06	0.00E 00
Co-60	2.26E 04	9.61E 04	0.00E 00	1.31E 04	0.00E 00	0.00E 00	7.06E 06	0.00E 00
Zn-65	7.02E 04	1.63E 04	4.25E 04	1.13E 05	7.13E 04	0.00E 00	9.94E 05	0.00E 00
Sr-89	1.72E 04	1.67E 05	5.99E 05	0.00E 00	0.00E 00	0.00E 00	2.15E 06	0.00E 00
Sr-90	6.43E 06	3.43E 05	1.01E 08	0.00E 00	0.00E 00	0.00E 00	1.47E 07	0.00E 00
Zr-95	3.69E 04	6.10E 04	1.90E 05	4.17E 04	5.95E 04	0.00E 00	2.23E 06	0.00E 00
I-131	2.72E 04	2.84E 03	4.80E 04	4.80E 04	7.87E 04	1.62E 07	0.00E 00	0.00E 00
I-133	7.68E 03	5.47E 03	1.66E 04	2.03E 04	3.37E 04	3.84E 06	0.00E 00	0.00E 00
I-135	4.14E 03	4.44E 03	4.92E 03	8.73E 03	1.34E 04	7.92E 05	0.00E 00	0.00E 00
Cs-134	2.24E 05	3.84E 03	6.50E 05	1.01E 05	3.30E 05	0.00E 00	1.21E 05	0.00E 00
Cs-136	1.16E 05	4.17E 03	6.50E 04	1.71E 05	9.53E 04	0.00E 00	1.45E 04	0.00E 00
Cs-137	1.28E 05	3.61E 03	9.05E 05	8.24E 05	2.82E 05	0.00E 00	1.04E 05	0.00E 00
Ba-140	4.32E 03	1.02E 05	7.39E 04	6.47E 01	2.11E 01	0.00E 00	1.74E 06	0.00E 00
Ce-141	2.89E 03	5.65E 04	3.92E 04	1.95E 04	8.53E 03	0.00E 00	5.43E 05	0.00E 00
Ce-144	3.61E 05	3.88E 05	6.77E 06	2.12E 06	1.17E 06	0.00E 00	1.19E 07	0.00E 00
Nb-95	6.55E 03	3.70E 04	2.35E 04	9.18E 03	8.62E 03	0.00E 00	6.14E 05	0.00E 00
Ru-103	1.07E 03	4.48E 04	2.79E 03	0.00E 00	7.03E 03	0.00E 00	6.62E 05	0.00E 00

* R_i values are in units of mRem/yr per $\mu Ci/m^3$ for inhalation and tritium, and in units of m^2 mRem/yr per $\mu Ci/Sec$ for all others.

Table 25. R_i Values for the Monticello Nuclear Generating Plant Inhalation Pathway Infant Age Group

Nuclide	T. Body	GI Tract	Bone	Liver	Kidney	Thyroid	Lung	Skin
H-3	6.46E 02	6.46E 02	0.00E 00	6.46E 02	6.46E 02	6.46E 02	6.46E 02	6.46E 02
Cr-51	8.93E 01	3.56E 02	0.00E 00	0.00E 00	1.32E 01	5.75E 01	1.28E 04	0.00E 00
Mn-54	4.98E 03	7.05E 03	0.00E 00	2.53E 04	4.98E 03	0.00E 00	9.98E 05	0.00E 00
Fe-59	9.46E 03	2.47E 04	1.35E 04	2.35E 04	0.00E 00	0.00E 00	1.01E 06	0.00E 00
Co-58	1.82E 03	1.11E 04	0.00E 00	1.22E 03	0.00E 00	0.00E 00	7.76E 05	0.00E 00
Co-60	1.18E 04	3.19E 04	0.00E 00	8.01E 03	0.00E 00	0.00E 00	4.50E 06	0.00E 00
Zn-65	3.10E 04	5.13E 04	1.93E 04	6.25E 04	3.24E 04	0.00E 00	6.46E 05	0.00E 00
Sr-89	1.14E 04	6.39E 05	3.97E 05	0.00E 00	0.00E 00	0.00E 00	2.03E 06	0.00E 00
Sr-90	2.59E 06	1.31E 05	4.08E 07	0.00E 00	0.00E 00	0.00E 00	1.12E 07	0.00E 00
Zr-95	2.03E 04	2.17E 04	1.15E 05	2.78E 04	3.10E 00	0.00E 00	1.75E 06	0.00E 00
I-131	1.96E 04	1.06E 03	3.79E 04	4.43E 04	5.17E 04	1.48E 07	0.00E 00	0.00E 00
I-133	5.59E 03	2.15E 03	1.32E 04	1.92E 04	2.24E 04	3.55E 06	0.00E 00	0.00E 00
I-135	2.27E 03	1.83E 03	3.86E 03	7.60E 03	8.47E 03	6.96E 05	0.00E 00	0.00E 00
Cs-134	7.44E 04	1.33E 03	3.96E 05	7.02E 05	1.90E 05	0.00E 00	7.95E 04	0.00E 00
Cs-136	5.28E 04	1.43E 03	4.82E 04	1.34E 05	5.63E 04	0.00E 00	1.17E 04	0.00E 00
Cs-137	4.54E 04	1.33E 03	5.48E 05	6.11E 05	1.72E 05	0.00E 00	7.12E 04	0.00E 00
Ba-140	2.89E 03	3.83E 04	5.59E 04	5.59E 01	1.34E 01	0.00E 00	1.59E 06	0.00E 00
Ce-141	1.99E 03	2.15E 04	2.77E 04	1.66E 04	5.24E 03	0.00E 00	5.16E 05	0.00E 00
Ce-144	1.76E 05	1.48E 05	3.19E 06	1.21E 06	5.38E 06	0.00E 00	9.84E 06	0.00E 00
Nb-95	3.78E 03	1.27E 04	1.57E 04	4.79E 05	4.72E 03	0.00E 00	4.79E 05	0.00E 00
Ru-103	6.79E 02	1.61E 04	2.02E 03	0.00E 00	4.24E 03	0.00E 00	5.52E 05	0.00E 00

* R_i values are in units of mRem/yr per $\mu Ci/m^3$ for inhalation and tritium, and in units of m^2 mRem/yr per $\mu Ci/Sec$ for all others.

Table 26 Table of Radioisotope Constants Used by EBARR

i	Isotope	Fission Yield	Decay Constant
1	Xe-133	0.0669	0.00000152
2	Xe-135	0.0630	0.0000210
3	Kr-85m	0.0130	0.0000438
3	Kr-88	0.0356	0.00000690
4	Kr-87	0.0253	0.000152
5	Xe-138	0.0590	0.000814
6	Kr-90	0.0500	0.0210
7	Xe-139	0.0540	0.0169
8	Kr-89	0.0459	0.00361
10	Xe-137	0.0600	0.00296
11	Xe-135m	0.00720	0.000722
12	Kr-83m	0.00520	0.000103
13	Xe-133m	0.00160	0.00000348
14	Xe-131m	0.000170	0.000000668
15	Kr-85	0.00271	0.00000000204

OFFSITE DOSE CALCULATION MANUAL - TABLE OF CONTENTS

SECTION **PAGE**

1.0 RECORD OF REVISION 3
1.0 RECORD OF REVISION (Cont) 4
2.0 GASEOUS EFFLUENT CALCULATIONS 4
2.1 Monitor Alarm Setpoint Determination 4
2.2 Gaseous Effluent Dose Rate - Compliance With Technical Specifications 12
2.3 Gaseous Effluents - Compliance With 10CFR50 15
2.4 Summary of EBARR Computer Program 21
2.5 Dose Parameters for Radioiodines, Particulates and Tritium 26
2.6 References 35
Figure 1 Gaseous Radwaste 36
Figure 2 Ventilation System 37
Table 1 Gaseous Source Terms(3) Ai, Ci/yr* 38
Table 2 Dose Factors and Constants for the Total Body and Skin for Gaseous Radionuclides 39
Table 3 Air Ejector Monitor Trip Setting and Storage Tank Contents Storage Tank Activity in Dose Equivalent Curies Xe-133 12 Hours After Completion of Tank Fill Release Rate Set to 1.00 of Maximum Trip Setting 41
Table 4 Child Critical Organ Dose Parameters for Radionuclide i for the Inhalation Pathway 44
Table 5 Dose Factors for Noble Gases and Daughters That May Be Detected in Gaseous Effluents 45
Table 6 Dose Parameters for Finite Evaluated Plumes for the Critical Boundary Location 0.51 mi from the Stack in the SSE Sector 46
Table 7 Ri Values for the Monticello Nuclear Generating Plant Ground Pathway 47
Table 8 Ri Values for the Monticello Nuclear Generating Plant Vegetable Pathway Adult Age Group 48
Table 9 Ri Values for the Monticello Nuclear Generating Plant Vegetable Pathway Teen Age Group 49
Table 10 Ri Values for the Monticello Nuclear Generating Plant Vegetable Pathway Child Age Group 50
Table 11 Ri Values for the Monticello Nuclear Generating Plant Meat Pathway Adult Age Group 51
Table 12 Ri Values for the Monticello Nuclear Generating Plant Meat Pathway Teen Age Group 52

Approval: PCR 01089530

l/jlk

SECTION **PAGE**

Table 13 Ri Values for the Monticello Nuclear Generating Plant Meat Pathway Child Age Group 53

Table 14 Ri Values for the Monticello Nuclear Generating Plant Cow Milk Pathway Adult Age Group 54

Table 15 Ri Values for the Monticello Nuclear Generating Plant Cow Milk Pathway Teen Age Group 55

Table 16 Ri Values for the Monticello Nuclear Generating Plant Cow Milk Pathway Child Age Group 56

Table 17 Ri Values for the Monticello Nuclear Generating Plant Cow Milk Pathway Infant Age Group 57

Table 18 Ri Values for the Monticello Nuclear Generating Plant Goat Milk Pathway Adult Age Group 58

Table 19 Ri Values for the Monticello Nuclear Generating Plant Goat Milk Pathway Teen Age Group 59

Table 20 Ri Values for the Monticello Nuclear Generating Plant Goat Milk Pathway Child Age Group 60

Table 21 Ri Values for the Monticello Nuclear Generating Plant Goat Milk Pathway Infant Age Group 61

Table 22 Ri Values for the Monticello Nuclear Generating Plant Inhalation Pathway Adult Age Group 62

Table 23 Ri Values for the Monticello Nuclear Generating Plant Inhalation Pathway Teen Age Group 63

Table 24 Ri Values for the Monticello Nuclear Generating Plant Inhalation Pathway Child Age Group 64

Table 25 Ri Values for the Monticello Nuclear Generating Plant Inhalation Pathway Infant Age Group 65

Table 26 Table of Radioisotope Constants Used by EBARR 66

1.0 RECORD OF REVISION

Revision No.	Date	Reason for Revision
1	December - 1998	Changed word "waste" to "effluent" in section 1.0, changed 1st sentence in section 2.0 to exact wording in T.S., added section 3.0 to reference section 1.0 word change to LAR 39.
2	October - 2000	Moved previous ODCM-03.01 (GASEOUS EFFLUENTS) into this section and renamed this section "GASEOUS EFFLUENTS CALCULATIONS" to facilitate moving the Radiological Effluents Tech Specs to the ODCM. Moved associated figures and tables into this section to make the section easier to use. Removed references to the unused MIDAS System. Revised references to the X/Q and D/Q values now located in Appendix A.
3	November - 2001	Replaced maximum acceptable flow rate in equation 2.1-9 (85.5 cfm) to the effluent flowrate at the Offgas Pretreatment Monitor.
4	January - 2004	Fixed typographical errors on equations 2.1-4, 2.5-4 and 2.5-5. Removed plant activity uptake through soil factors from equations 2.5-5, 2.5-7 and 2.5-9. This term models plant activity uptake through the soil. Experience has shown this to be an insignificant pathway and the NRC drops it from consideration in NUREG 0133. Removed reference to 10CFR20 in sections 2.0.B., 2.2.1, 2.2, 2.2.1 and 2.2.2. With the revision to 10CFR20, the connection between the 400 and 3000 mRem/yr dose rate limits for gaseous effluent monitor alarm setpoints was broken. These limits still exist, but they are Technical Specification only requirements. Moved sentence about real time x/Q and MIDAS XP computer program in section 2.2.3 to section 2.2.2 where it belongs. Added sentence about historical atmospheric dispersion factors (D/Q) being used to determine critical receptor to section 2.2.3.
5	March - 2007	Changed references for "10CFR100" to "10CFR50.67" as required by License Amendment 148 (Alternate Source Term).

1.0 RECORD OF REVISION (Cont)

Revision No.	Date	Reason for Revision
6	May, 2007	Added note to Table 1 stating that the Source terms were calculated in accordance with NUREG-0016 by using USNRC "GALE" Code. Made various format and typographical error corrections.

2.0 GASEOUS EFFLUENT CALCULATIONS

This section describes the procedures used by MNGP to:

A. Determine alarm point settings for gaseous effluent monitors;

B. Determine that dose rates at the site boundary from noble gases, particulates, and iodines remain below the limits of Technical Specifications, and

C. Determine that the total dose from airborne effluents for the year is within the limits of Appendix I of 10CFR50.

The computations of this section may be done manually, by use of computer programs which implement these algorithms.

2.1 Monitor Alarm Setpoint Determination

This procedure determines the effluent monitor alarm setpoint that indicates if the dose rate at or beyond the site boundary due to noble gas radionuclides in the gaseous effluent released from the site exceeds 500 mrem/year to the whole body or exceeds 3000 mrem/year to the skin. Accident monitors are set to limit effluent releases to a small fraction of the limits specified in 10CFR50.67. In addition this section calculates the maximum activity permitted in each off-gas storage tank.

Monitor high alarm or isolation setpoints are established in one of the following ways:

1. Monthly calculation of setpoints using the methodology of Section 2.1.1 for noble gas nuclides in releases during the previous month.

2. Prior to each containment purge, recalculation of the setpoint using the methodology of Section 2.1.1 based on the sample taken prior to purging.

2.1.1 Effluent Monitors

Monitor alarm setpoints are determined to assure compliance with Technical Specifications. The setpoints indicate that the dose rate at or beyond the site boundary due to noble gas radionuclides in the gaseous effluent released from the site exceeds 500 mrem/year to the whole body or exceeds 3000 mrem/year to the skin.

Monitor alarm setpoints are calculated for the Reactor Building Ventilation Plenum Noble Gas monitors and the Stack Noble Gas monitors once per month. These calculations are based on the noble gas isotopes in releases made during the previous month. The calculations are performed by the DOSGAS computer program.

In addition, prior to containment purging, the monitor setpoint for the monitor release point is recalculated. This calculation is performed by the DWCAL computer program. The monitor setpoint is determined as follows:

1. If no detectable noble gas activity is found in the purge sample, the values used as the basis for the alarm point setting are from the column, "Drywell purging" in Table 1, Gaseous Source Terms.

2. If any calculated setpoint is less than the existing monitor setpoint, the setpoint is reduced to the new value.

3. If the calculated setpoint is greater than the existing monitor setpoint, the setpoint may remain at the lower value or be increased to the new value.

4. The setpoint during purging may not be increased above the setpoint determined for continuous releases, however.

Except for containment inerting and deinerting, all containment purging and venting is done via the standby gas treatment system and plant stack. Containment inerting and deinerting releases are made via the Reactor Building vent. The small amount of containment atmosphere released by the containment sampling system on a continuous basis is not considered a venting operation.

A. Reactor Building Vent Alarm Setpoint

The following method applies to gaseous releases via the Reactor Building vent when determining the high-high alarm setpoint for the Reactor Building Vent Noble Gas Monitor . This method is applied to both continuous releases and batch releases (containment inerting and deinerting).

1. Determine the "mix" (noble gas radionuclides and composition) of the gaseous effluent.

a. Determine the gaseous source terms that are representative of the "mix" of the gaseous effluent. Gaseous source terms are the total curies of each noble gas released during the previous month or a representative analysis of the gaseous effluent. Table 1 source terms may be used if the Reactor Building releases for the previous month were below the lower limits of detection (LLD), or, in the case of inerting and deinerting releases, no detectable activity was found in the grab sample taken prior to purging.

b. Determine S_i, the fraction of the total radioactivity in the gaseous effluent comprised by noble gas radionuclide "i", for each individual noble gas radionuclide in the gaseous effluent.

$$S_i = \frac{A_i}{\sum_i A_i} \qquad 2.1\text{-}1$$

where

A_i = The radioactivity of noble gas radionuclide "i" in the gaseous effluent.

2. Determine Q_t, the maximum acceptable total release rate of all noble gas radionuclides in the gaseous effluent (µCi/sec), based upon the whole body exposure limit (500 mrem/yr).

$$Q_t = \frac{500}{(\chi/Q)_v \sum_i K_i S_i} \qquad 2.1\text{-}2$$

where

$(\chi/Q)_v$ = The highest calculated average relative concentration of effluents released via the Reactor Building vent for any area at or beyond the site boundary for all sectors (sec/M^3) from Appendix A, Table 3. For purge releases, substitute the value obtained from Chemistry Manual Procedure I.6.07 (ATMOSPHERIC DISPERSION DETERMINATION).

K_i = The total whole body dose factor due to gamma emissions from noble gas radionuclide "i" (mrem/year/µCi/m^3) from Table 2.

3. Determine Q_t based upon the skin exposure limit (3000 mrem/yr).

$$Q_t = \frac{3000}{(\chi/Q)\sum_i (L_i + 1.1\ M_i)\ S_i} \qquad 2.1\text{-}3$$

where

$L_i + 1.1\ M_i$ = the total skin dose factor due to emissions from noble gas radionuclide "i" (mrem/year/μCi/m^3) from Table 2.

4. Determine HHSP (the monitor high-high alarm setpoint above background (net μCi/sec)).

<u>NOTE</u>: Use the <u>lower</u> of the Q_t values obtained in Sections 2.1.1.A.2. and 2.1.1.A.3.

$$HHSP = 0.50\ Q_t \qquad 2.1\text{-}4$$

0.50 = Fraction of the total radioactivity from the site via the monitored release point to ensure that the site boundary limit is not exceeded due to simultaneous releases from several release points.

B. Stack Isolation Setpoint

The following method applies to gaseous releases via the Stack when determining the high-high alarm setpoint for the Stack Gas Monitor which initiates isolation of Stack releases. The method is applied to both continuous releases and batch releases (containment purges). Mechanical vacuum pump releases (relatively insignificant) will be controlled using the continuous setpoint.

1. Determine the "mix" (noble gases and composition) of the gaseous effluent.

   a. Determine the gaseous source terms that are representative of the "mix" of the gaseous effluent. Gaseous source terms are the total curies of each noble gas released during the previous month or a representative analysis of the gaseous effluent. Table 1 source terms may be used if the Stack releases for the previous month were below the lower limits of detection (LLD).

b. Determine S_i, the fraction of the total radioactivity in the gaseous effluent comprised by noble gas radionuclide "i", for each individual noble gas radionuclide in the gaseous effluent.

$$S_i = \frac{A_i}{\sum_i A_i} \qquad 2.1\text{-}5$$

where

A_i = The radioactivity of noble gas radionuclide "i" in the gaseous effluent.

2. Determine Q_t, the maximum acceptable total release rate of all noble gas radionuclides in the gaseous effluent (µCi/sec), based upon the whole body exposure limit (500 mrem/yr).

$$Q_t = \frac{500}{\sum_i V_i S_i} \qquad 2.1\text{-}6$$

NOTE: For short-term batch releases (equal to or less than 500 hrs/yr) via drywell purging, substitute v_i for V_i in Equation 2.1-6.

where

V_i = The constant for long-term releases (greater than 500 hr/yr) for noble gas radionuclide "i" accounting for the gamma radiation from the elevated finite plume (mrem/year/µCi/sec) from Table 2.

v_i = The constant for short-term releases (equal to or less than 500hr/yr) for noble gas radionuclide "i" accounting for the gamma radiation from the elevated finite plume (mrem/yr/µCi/sec) from Table 2.

3. Determine Q_t based upon the skin exposure limit (3000 mrem/yr).

$$Q_t = \frac{3000}{\Sigma_i (L_i (\chi/Q)_s + 1.1B_i) S_i} \qquad 2.1\text{-}7$$

NOTE: For short-term batch releases (equal to or less than 500 hours per year) via drywell purging, use the short-term $(\chi/q)_s$ value and substitute b_i for B_i in Equation 2.1-7.

where

$L_i(\chi/Q)_s + 1.1B_i$ = The total skin dose constant for long-term releases (greater than 500 hours per year) due to emissions from noble gas radionuclide "i", Table 2, (mrem/year/µCi/sec);

$L_i(\chi/q)_s + 1.1b_i$ = The total skin dose constant for short-term releases (less than or equal to 500 hours per year) due to emissions from noble gas radionuclide "i", Table 2, (mrem/year/µCi/sec).

4. Determine HHSP (the monitor high-high alarm setpoint above background (µCi/sec).

NOTE: Use the lower of the Q_t values obtained in sections 2.1.1.B.2. and 2.1.1.B.3.

$$HHSP = 0.50\ Q_t \qquad 2.1\text{-}8$$

0.50 = Fraction of the total radioactivity from the site via the monitored release point to ensure that the site boundary limit is not exceeded due to simultaneous releases from several release points.

2.1.2 Accident Monitors

The gross radioactivity in noble gases removed from the main condenser by means of steam jet air ejectors as measured prior to entering the treatment, adsorption, and delay systems ***SHALL*** be limited by an alarm setpoint for the Offgas Monitor.

This procedure determines the monitor alarm setpoint that indicates if the potential body accident dose to an individual at or beyond the site boundary due to noble gas radionuclides in the gaseous effluent released from the site exceeds a small fraction of the limits specified in 10CFR50.67 in the event this effluent, including the radioactivity accumulated in the treatment system, is inadvertently discharged directly to the environment without treatment. This calculation is performed by the OFFGAS computer program on a routine or an as needed basis. Offgas flow is automatically terminated when this setpoint is reached.

A. Maximum Release Rate

Determine Q_t, the maximum acceptable total release rate in μCi/sec of all noble gas radionuclides in the gaseous effluent at the Offgas Monitor after a 5-minute decay, based on the maximum acceptable total release rate of 2.60E5 μCi/sec after a 30-minute decay.

1. Determine the offgas mixture of the gaseous effluent. The offgas mixture is the fraction of the offgas noble gas radioactivity caused by each recoil diffusion, and equilibrium component. The offgas mixture is determined at least once per month.

2. Determine Q_t based on the offgas mixture using Table 3. This table was prepared using a variation of the EBARR computer code.

B. Maximum Concentration

Determine C_t, the maximum acceptable total radioactivity concentration of all noble gas radionuclides in the gaseous effluent (μCi/cc).

$$C_t = 2.12\ E\text{-}03\ \frac{Q_t}{f} \qquad 2.1\text{-}9$$

where

f = The effluent flowrate at the Offgas Pretreatment Monitor (cfm);

C. Monitor Reading

Determine C.R., the calculated monitor reading above background attributed to the noble gas radionuclides (mR/hr).

$$C.R. = \frac{C_t}{E} \qquad 2.1\text{-}10$$

where

E = The detection efficiency of the monitor for noble gas radionuclides represented in main condenser offgas (μCi/cc/mR/hr) from Plant Chemistry Surveillance procedures.

D. Monitor High High Setpoint

The monitor high-high alarm setpoint above background (mr/hr) should be set at or below the C.R. value.

2.1.3 Offgas Storage Tank Maximum Activity

The maximum activity in each storage tank is limited to less than 22,000 curies of noble gas (considered as dose equivalent Xe-133) after 12 hours of holdup. To verify that this limit is not exceeded, Table 3 is used.

The gross radioactivity of noble gases from the main condenser air ejector is determined by isotopic analysis monthly and whenever a significant increase in offgas activity is noted. Analysis of this data is used to determine the primary mode of fission product release from the fuel (recoil, equilibrium, or diffusion) and the gross release rate. This information combined with the condenser air inleakage rate (cfm) and the air ejector monitor release rate is used to confirm that the maximum tank contents limit is not exceeded. This calculation is performed by the OFFGAS computer program on a routine or as needed basis.

Table 3 is entered with the offgas mixture (fraction recoil, diffusion, and equilibrium rounded to one decimal place) and the air inleakage rate (in cfm). The resulting tank activity is multiplied by the current total release rate after a 30 minute decay (μCi/sec) and divided by the maximum permitted air ejector release rate of 260,000 μCi/sec. Linear interpolation of air inleakage is used.

As noted earlier, Table 3 is derived from the EBARR computer program described in Section 2.4. It is extremely unlikely that the maximum tank activity limit will be exceeded.

2.2 Gaseous Effluent Dose Rate - Compliance With Technical Specifications

Dose rates resulting from the release of noble gases, and from radioiodines and particulates must be calculated to show compliance with 10CFR20. The dose rate limits of Technical Specifications are conservatively applied on an instantaneous basis at the hypothetical worst case location.

2.2.1 Noble Gases

The dose rate in unrestricted areas resulting from noble gas effluents is limited to 500 mrem/yr to the total body and 3000 mrem/yr to the skin. The setpoint determinations discussed in the previous section are based on the dose rate calculation method presented in NUREG-0133[4]. This represents a backward solution to the limiting dose rate equations in NUREG-0133. Setting alarm trip setpoints in this manner will ensure that the limits of Technical Specifications are met for noble gas releases. Therefore, no routine dose rate calculations for noble gases will be needed to show compliance with this part. Routine calculations are made for dose rates from noble gas releases to show compliance with 10CFR50, Appendix I by performing the DOSGAS computer program.

2.2.2 Radioiodine and Radioactive Particulates and Other Radionuclides

The dose rate in unrestricted areas resulting from the release of radioiodines and particulates with half lives greater than 8 days is limited by Technical Specifications to 1500 mrem/yr to any organ. The calculation of dose rate from radioiodines and particulates is performed for drywell purges prior to the release and weekly for all releases. This calculation is performed by the DWCAL computer program for drywell purges and 1/week by the IPART computer program for all releases. The calculations are based on the results of analyses obtained pursuant to Surveillance Requirement 3.1.4.B. To show compliance with Technical Specifications, Equation 2.2-1 will be evaluated for I-131, I-133, tritium, and radioactive particulates with half lives greater than eight days.

$$\Sigma P_{i_I} [(\chi/Q_v) Q_{iv} + (\chi/Q_s) Q_{is}] < 1500 \text{ mrem/yr} \qquad 2.2\text{-}1$$

where

P_{i_I} = child critical organ dose parameter for radionuclide i for the inhalation pathway, mrem/yr per μCi/m^3; (Table 4)

$(\chi/Q)_v$ = annual average relative concentration for long-term release from the Reactor Building vent at the critical location, sec/m^3 (Appendix A, Table 3);

$(\chi/Q)_s$ = annual average relative concentration for long-term releases from the offgas stack at the critical location, sec/m3 (Appendix A, Table 6);

Q_{iv} = the release rate of radionuclide i from the Reactor Building vent for the week of interest, µCi/sec;

Q_{is} = the release rate of radionuclide i from the offgas stack for the week of interest, µCi/sec.

The χ/Q values presented in Appendix A, Tables 3 and 6 have been calculated using the USNRC computer code "XOQDOQ"[5]. Dose rate calculations using Equation 2.2-1 are made once per week. The source terms Q_{iv} and Q_{is} are determined from the results of analysis of weekly stack and Reactor Building particulate filters and charcoal cartridges. These source terms include all gaseous releases from MNGP. They are recorded and reported as the total dose for compliance with Technical Specifications.

Radioiodines and particulates may be released from both the offgas stack and the Reactor Building vent. As specified in NUREG-0133, the critical receptor location is identified based on the Reactor Building vent χ/Q.

A component of the total stack or vent source term may be due to short term releases occurring as a result of containment drywell purging. Dose rate calculations are made on this component separately to further assure compliance with Technical Specifications prior to release. The calculated dose rate is used only to determine whether or not the drywell can be purged. All dose rates from drywell purges will be accounted for and reported through the weekly calculations discussed above. Release rates are determined from the results of analyses of samples from the drywell. The real time atmospheric dispersion factor (χ/Q) is calculated by performing the MIDAS XP Computer Program IAW MNGP Procedure I.06.07 (ATMOSPHERIC DISPERSION DETERMINATION).

The term Q_{is} for the calculation of drywell purge dose rate is determined by multiplying the concentration of each nuclide in the drywell by the rate of release. Credit will be taken for the expected reduction in radionuclide concentration due to use of the standby gas treatment system. Equation 2.2-2 is used to calculate purge dose rates. Only one source term is used depending on the release point (stack or Reactor Building vent). Short term values of χ/q from Appendix A, Table 9 or Table 12 are used in the purge dose rate calculation. the limiting dose rate limit for each purge is determined using:

$$BL = 1500 - (D_{cv} + D_{cs} - D_{dw}) \qquad 2.2\text{-}2$$

where

BL = limiting dose rate for the batch, mrem/yr;

D_{cv} = previous week's dose rate from Reactor Building continuous and batch releases, mrem/yr;

D_{cs} = previous week's dose rate from offgas stack continuous and batch releases, mrem/yr;

D_{dw} = previous week's total dose rate from drywell purge releases, mrem/yr, for the purge release point.

Although mechanical vacuum pump releases are batch mode, they cannot be sampled prior to release. For this reason, no prerelease dose rate calculations can be made from this source. Experience has shown mechanical vacuum pump release to be well within Technical Specifications limits.

2.2.3 Critical Receptor Identification

As stated in 5.2.1 of NUREG-0133, when the critical receptor is different for stack and vent releases, the controlling location for vent releases should be used. For this reason, the Reactor Building vent dispersion parameters are used to identify the critical receptor. (Historical Atmospheric Dispersion factors (D/Q) are used for determining the critical receptor (App A, Table 5).) As discussed previously, weekly and batch dose rate calculations are performed for the critical boundary location. The critical boundary location is based on reactor vent long term χ/Q (Appendix A, Table 3) is 0.43 miles in the SSE sector.

2.3 Gaseous Effluents - Compliance With 10CFR50

Doses resulting from the release of noble gases, and radioiodines and particulates must be calculated to show compliance with Appendix I of 10CFR50. The calculations are performed monthly for all gaseous effluents. Calculations of the doses received due to the release of noble gases is performed by the DOSGAS computer program. Similarly the dose received due to the release of radioiodines and particulates is calculated by the DOSPIT computer program. These two programs are performed monthly or as required.

This section describes the methods and equations used at MNGP to perform the dose evaluation using manual methods based on historical meteorological dispersion parameters.

2.3.1 Noble Gases

The air dose in unrestricted areas at MNGP is limited to:

A. for any calendar quarter:

$D_\gamma \leq$ 5 mrad due to gamma radiation; and
$D_\beta \leq$ 10 mrad due to beta radiation; and

B. for any calendar year:

$D_\gamma \leq$ 10 mrad due to gamma radiation; and
$D_\beta \leq$ 20 mrad due to beta radiation.

Air doses may be calculated using historical meteorological data using the highest normalized concentration statistics as the best estimator of the atmospheric dispersion.

A. Air Dose Based on Historical Meteorology

The limiting air dose, D, based on historical meteorology is based on the critical receptor in the unrestricted area. For air doses the critical receptor is described by the off-site location with the highest long term annual average relative concentration (χ/Q) at or beyond the restricted area boundary. For short-term vent releases (less than 500 hours per year), the location with the highest short-term average relative concentration (χ/q) is chosen. The critical receptor is described in section 2.3.5.

For gamma radiation, the air dose is given by:

$$D_\gamma = 3.17 \times 10^{-8} \sum_i (M_i[(\chi/Q)_v Q_{iv} + (\chi/q)_v \; q_{iv}] + B_i Q_{is} + b_i q_{is})$$

The historical meteorological data base is the basis for the method described in the original MNGP ODCM.

For beta radiation, the air dose is:

$$D_\beta = 3.17 \times 10^{-8} \sum_i N_i \left[(\chi/Q)_v Q_{iv} + (\chi/q)_v q_{iv} + (\chi/Q)_s Q_{is} + (\chi/q)_s q_{is}\right] \qquad 2.3\text{-}2$$

where

M_i = The air dose factor due to gamma emission for each identified noble gas radionuclide i, mrad/yr per $\mu Ci/m^3$; (Table 5)

N_i = the air dose factor due to beta emissions for each identified noble gas radionuclide i, mrad/yr per $\mu Ci/m^3$; (Table 5)

$(\chi/Q)_v$ = the annual average relative concentration for areas at or beyond the site boundary for long-term Reactor Building vent releases (greater than 500 hr/yr), sec/m³, (Appendix A, Table 3);

$(\chi/q)_v$ = the relative concentration for areas at or beyond the site boundary for short-term Reactor Building vent releases (equal to or less than 500 hr/yr), sec/m³, (Appendix A, Table 12);

$(\chi/Q)_s$ = the annual average relative concentration for areas at or beyond the site boundary for long-term offgas stack releases (greater than 500 hr/yr), sec/m³ (Appendix A, Table 6);

$(\chi/q)_s$ = the relative concentration for areas at or beyond the site boundary for short-term offgas stack releases (equal to or less than 500 hr/yr), sec/m³ (Appendix A, Table 9);

q_{is} = the average release of the noble gas radionuclide i in gaseous effluents for short-term offgas stack releases (equal to or less than 500 hr/yr), µCi;

q_{iv} = the average total release of the noble gas radionuclide i in gaseous effluents for short-term Reactor Building vent releases (equal to or less than 500 hr/yr), µCi;

Q_{is} = the total release of noble gas radionuclide i in gaseous releases for long-term offgas stack releases (greater than 500 hr/yr), µCi;

Q_{iv} = the total release of noble gas radionuclide i in gaseous effluents for long-term Reactor Building vent releases (greater than 500 hr/yr), μCi;

B_i = the constant for long-term releases (greater than 500 hr/yr) for each identified noble gas radionuclide i accounting for the gamma radiation from the elevated finite plume, mrad/yr per μCi/sec (Table 6);

b_i = the constant for short-term releases (less than or equal to 500hr/yr) for each identified noble gas radionuclide i accounting for the gamma radiation from the elevated finite plume, mrad/yr per μCi/sec (Table 6);

3.17×10^{-8} = the inverse of the number of seconds in a year.

Noble gases are continuously released from the Reactor Building vent and the plant stack. These long-term releases rates are determined from the continuous noble gas monitor readings and periodic radionuclide analyses. There are infrequent containment purges from either release point. To separate the short-term release from the long term release (the continuous monitor records both), the drywell source term should be subtracted from the total source term whenever a purge release occurs. Periodic radionuclide analysis of main condenser offgas and radionuclide analysis of each purge prior to release are used in conjunction with the total activity measured by the monitor to quantify individual noble gas nuclides released.

Long-term and short-term χ/Q's are given in Appendix A for both the Reactor Building vent and the plant stack. Short-term χ/q's were calculated using the USNRC computer code "XOQDOQ" assuming 144 hours per year drywell purge. Values of M and N were calculated using the methodology presented in NUREG-0133 and are given in Table 5. Table 6 presents values of B_i and b_i calculated using the USNRC computer code "RABFIN." This code was also used to calculate values of V_i presented in section 1.0. Values of v_i, were calculated by multiplying V_i by the ratio of b_i to B_i. The v_i, iB_i, and b_i values of Table 6 are the maximum values for the site boundaries location. This location, 0.51 mi SSE, is different than the critical site boundary location based upon the Reactor Building vent χ/Q.

2.3.2 Radioiodine, Particulates, and Other Radionuclides

The dose, D_{aj}, to an individual from radioiodines, radioactive materials in particulate form and radionuclides other than noble gases with half lives greater than eight days in gaseous effluents released to unrestricted areas ***SHALL*** be limited to:

$D_{aj} \leq$ 7.5 mrem for any calendar quarter

$D_{aj} \leq$ 15 mrem for any calendar year

These limits apply to the receptor location where the combination of existing pathways and age groups indicates the maximum exposure.

A. Dose from Radioiodines and Particulates Based on Historical Meteorology

The worst case dose to an individual from I-131, tritium and radioactive particulates with half-lives greater than eight days in gaseous effluents released to unrestricted areas is determined by the following expressions:

$$D_{aj} = 3.17 \times 10^{-8} \, {}_{pi}\Sigma\Sigma R_{iapj} \, [W_v Q_{iv} + W_v q_{iv} + W_s Q_{is} + W_s q_{is}] \quad 2.3\text{-}3$$

where

Q_{is} = release of radionuclide i for long-term offgas stack releases (greater than 500 hr/yr), µCi;

Q_{iv} = release of radionuclide i for long-term Reactor Building vent releases (greater than 500 hr/yr), µCi;

q_{is} = release of radionuclide i for short-term offgas stack purge releases (equal to or less than 500 hr/yr); µCi;

q_{iv} = release of radionuclide i for short-term Reactor Building vent purge releases (equal to or less than 500 hr/yr); µCi;

W_s = the dispersion parameter for estimating the dose to an individual at the controlling location for long-term offgas stack releases (greater than 500 hr/yr), sec/m^3 or m^{-2};

W_v = the dispersion parameter for estimating the dose to an individual at the controlling location for long-term Reactor Building vent releases (greater than 500 hr/yr), sec/m^3 or m^{-2};

W_s = the dispersion parameter for estimating the dose to an individual at the controlling location for short-term offgas stack releases (equal to or less than 500 hr/yr), sec/m^3 or m^{-2};

W_v = the dispersion parameter for estimating the dose to an individual at the controlling location for short-term Reactor Building vent releases (equal to or less than 500 hr/yr), sec/m^3 or m^{-2}

3.17×10^{-8} = the inverse of the number of seconds in a year.

R_{iapj} = the dose factor for each identified radionuclide i, pathway p, age group a, and organ j, m^2 mrem/yr per µCi/sec or mrem/yr per µCi/m^3.

The above equation is applied to each combination of age group and organ. Values of R_{iapj} have been calculated using the methodology given in NUREG-0133 and are given in Tables 7 through 25. The equation is applied to a controlling location which will be one of the following:

A. residence,

B. vegetable garden,

C. milk animal.

The selection of the actual receptor is discussed in section 2.3.5. The W values are in terms of χ/Q (sec/m^3) for the inhalation pathways and for tritium and in terms of D/Q (m^{-2}) for all other pathways.

Section 2.5.2 contains the methodology for calculating R_{iapj} values. This method will be used to compute dose factors for nuclides not tabulated in Tables 7 through 25 if they are encountered.

2.3.3 Cumulation of Doses

Doses calculated monthly are summed for comparison with quarterly and annual limits. The monthly results are added to the doses cumulated from the other months in the quarter of interest and in the year of interest and compared to the limits given in section 2.3.1 and 2.3.2. This summation is performed by the DOSGAS and the DOSPIT computer programs for doses from exposures due to noble gas, and radioiodine and particulates respectively. If these limits are exceeded, a Special Report will be submitted to the USNRC. If twice the limits are exceeded, a Special Report showing compliance with 40CFR190[9] will be submitted.

2.3.4 Projection of Doses

Projection of doses is not necessary. The ODCM requires the offgas holdup system to be operated at all times.

2.3.5 Critical Receptor Identification

The critical receptors for compliance with 10CFR50, Appendix I will be identified. For the noble gas specification the critical location is based on the external dose pathway only. This location is the off-site location with the highest long-term Reactor Building vent χ/Q and is selected using the χ/Q values given in Appendix A, Table 4. The critical receptor location is used for showing compliance with 10CFR20 and remains the same unless meteorological data is re-evaluated or the site boundary changes.

The critical location for the radioiodine and particulate pathway is selected once per year. This selection follows the annual land use census performed within 5 miles of the MNGP. Each of the following locations is evaluated as a potential critical receptor before implementing the effluent technical specifications:

A. Residences in each sector.

B. Vegetable garden producing leafy green vegetables.

C. All identified milk animal locations.

The critical receptor is selected based on this evaluation.

Following the annual survey, doses are calculated using Equation 2.3-3 for all newly identified receptors and those receptors whose characteristics have changed significantly. The calculation includes appropriate information shown to exist at each location. The dispersion parameters given in this manual should be employed. The total releases reported for the previous calendar year should be used as the source term.

2.4 Summary of EBARR Computer Program

The basic task performed by EBARR is to predict the offgas composition and activity at various stages of waste gas treatment and at the time of release (Table 26). The basic data supplied to EBARR consists of the release rate, in μCi/sec measured at the SJAE, of six readily measurable fission product noble gases: Xe-133, Xe-135, Kr-85M, Kr-88, Kr-87, and Xe-138. There are nine other noble gases of interest from a radioactive effluent point of view. They are: Kr-90, Xe-139, Kr-89, Xe-137, Xe-135m, Kr-83m, Xe-133m, Xe-131m, and Kr-85. Many of these nine gases are not directly measurable in the presence of the others. By establishing the offgas release mode from the six measured release rates, EBARR computes the release rates of the other nine gases known to be present.

The first step performed by EBARR is to correct the release rates of the six measured noble gases for decay during their transit from the reactor vessel to the SJAE:

$$A_i(0) = A_i(t_{dly})\ e^{\lambda_i t_{dly}} \qquad 2.4\text{-}1$$

where

$A_i(t)$ = release rate of noble gas i at the time t after leaving reactor, μCi/sec;

t_{dly} = transit time from reactor to SJAE, sec;

λ_i = decay constant of noble gas i, sec^{-1}.

EBARR then uses a least square fitting routine to determine the values of B_1, B_2, and B_3 giving the best fit to $A_1(0)$ through $A_6(0)$ in the equation:

$$\log\left|\frac{A_i}{y_i\lambda_i}\right| = \log\left|B_1 + \frac{B_2}{\sqrt{\lambda_i}} + \frac{B_3}{\lambda_i}\right| \qquad 2.4\text{-}2$$

where

y_i = fraction of all fissions yielding noble gas i.

This equation consists of three terms; a recoil release mode term, a diffusion release mode term, and an equilibrium release mode term. This is the standard General Electric offgas distribution model.

The values of B_1, B_2, and B_3, are used by EBARR to characterize the offgas release mechanism in terms of percent recoil, percent diffusion, and percent equilibrium type release. This characterization is useful in fuel performance evaluation. The equation for these three fractions are:

$$\% \text{ Recoil} = 100 \times \frac{\sum_{i=1,6} B_1 y_i \lambda_i}{\sum_{i=1,6} (B_1 y_i \lambda_i + B_2 y_i \sqrt{\lambda_i} + B_3 y_i)} \qquad 2.4\text{-}3$$

$$\% \text{ Diffusion} = 100 \times \frac{\sum_{i=1,6} B_2 y_i \sqrt{\lambda_i}}{\sum_{i=1,6} (B_1 y_i \lambda_i + B_2 y_i \sqrt{\lambda_i} + B_3 y_i)} \qquad 2.4\text{-}4$$

$$\% \text{ Equilibrium} = 100 \times \frac{\sum_{i=1,6} B_3 y_i}{\sum_{i=1,6} (B_1 y_i \lambda_i + B_2 y_i \sqrt{\lambda_i} + B_3 y_i)} \qquad 2.4\text{-}5$$

The release rate from the reactor vessel for the nine noble gases not measured is then:

$$A_i(0) = B_1 y_i \lambda_i + B_2 y_i \sqrt{\lambda_i} + B_3 y_i \qquad 2.4\text{-}6$$

At any time, t, after leaving the reactor vessel the release rate is:

$$A_i(t) = A_i(0)\, e^{-\lambda_i t_i} \text{, for i = 3 through 14} \qquad 2.4\text{-}7$$

and

$$A_i(t) = A_i(0)\, e^{-\lambda_i t} + \frac{\propto_i \lambda_i A_j(0)}{\lambda_i - \lambda_j} \left(e^{-\lambda_j t} - e^{-\lambda_i t}\right) \text{, for 1 = 1, 2, and 15} \qquad 2.4\text{-}8$$

where

$\propto_i$ = fraction of disintegrations of isotope j producing isotope i.

Equation (2.4-8) contains an additional factor to account for the decay of Xe-131m to Xe-133, Xe-135m to Xe-135, and Kr-85m to Kr-85. This factor is normally small.

As shown in Table 26, the plant stack noble gas release consists of three components:

A. main condenser non-condensibles;

B. gland exhaust; and

C. stack dilution air drawn from Reactor and Turbine Buildings.

Source C is considered to be negligible compared to sources A and B. The composition of the gland exhaust release is assumed to be identical to the offgas mixture at the SJAE. Therefore, the stack release rate of isotope i is:

$$R_i(t) = A_i(t) + F_{loc}A_i(t_{dly}) \qquad 2.4\text{-}9$$

where

F_{loc} = fraction of main steam flow diverted to gland seal steam supply and the total noble gas release rate at any time is:

$$R_{tot}(t) = \sum_{i=1,\,15} [A_i(t) + F_{loc}A_i\,(t_{dly})] \qquad 2.4\text{-}10$$

EBARR also performs a secondary task of computing the compressed offgas storage tank contents in terms of dose equivalent Xe-133. Control 2.4.1.B in ODCM-03.01 limits this quantity to 22,000 Curies 12 hours after placing a tank in storage (when the discharge valve interlock permits the tank to be released).

Prior to reaching the storage tanks (Table 26), the offgas stream is delayed several hours flowing from the recombiners to the compressors via the 42-inch holdup pipe. Offgas reaching the tanks is therefore delayed by:

$$t_{ddly} = t_{dly} + \frac{P_{42}V_{42}}{P_aL} \qquad 2.4\text{-}11$$

where

V_{42} = 42-inch pipe volume;

P_{42} = 42-inch pipe pressure;

L = total air inleakage, SCFM, (Bleed air and condenser inleakage);

P_a = atmospheric pressure.

While a tank is being filled, offgas enters the tank at rate L. The activity of each isotope in the tank, C_i, is a function of time from the start of filling, t_f, is computed by EBARR using.

$$C_i(t_f) = \frac{A_i(t_{ddly})}{\lambda_i} \left(1 - e^{-\lambda_i t_f}\right) \text{ for } i = 3 \text{ to } 14 \qquad 2.4\text{-}12$$

and

$$C_i(t_f) = \frac{A_i(t_{ddly})}{i} \left(1 - e^{-\lambda_i t_f}\right) + \frac{\alpha_i \lambda_i A_j(t_{ddly})}{\lambda_j} \left[\frac{e^{-\lambda_i t_f} - e^{-\lambda_j t_f}}{\lambda_i - \lambda_j} + \frac{1 - e^{-\lambda_i t_f}}{\lambda_i}\right]$$

$$\text{for } i = 1, 2, \text{ and } 15 \qquad 2.4\text{-}13$$

Equation 2.4-13 contains an additional factor to account for the decay of Xe-133m to Xe-133, Xe-135m to Xe-135, and Kr-85m to Kr-85. This factor is normally small.

Pressure builds up in the tank at the rate:

$$p(t_f) = \frac{t_f L\, P_a}{V_{tk}} \qquad 2.4\text{-}14$$

where

V_{tk} = volume of storage tank.

When the pressure in the tank reaches the design value, P_{max}, at t_{fill}, EBARR assumes the tank is full. Total tank activity, C, and total tank Xe-133 dose equivalent activity, D, is computed at t_{rel} when the interlock on the tank discharge valve permits the tank to be released after an additional delay of t_{intk}:

$$t_{fill} = \frac{P_{max} V_{tk}}{P_a L} \qquad 2.4\text{-}15$$

$$t_{rel} = t_{fill} + t_{intk} \qquad 2.4\text{-}16$$

$$C_i(t_{rel}) = C_i(t_{fill})\, e^{-\lambda_i t_{intk}}, \text{ for } i = 3 \text{ through } 14 \qquad 2.4\text{-}17$$

and

$$C_i(t_{rel}) = \left(C_i(t_{fill})\, e^{-\lambda_i t_{intk}} + \frac{\alpha_i \lambda_i\, C_j(t_{fill})}{\lambda_i - \lambda_j} \left(e^{-\lambda_j t_{intk}} - e^{-\lambda_i t_{intk}}\right)\right) \text{ for } i = 1, 2, \text{ and } 15$$

$$2.4\text{-}18$$

$$C(t_{rel}) = \sum_{i = 1, 15} C(t_{rel}) \qquad 2.4\text{-}19$$

$$D(t_{rel}) = \frac{\sum_{i = 1, 15} C_i(t_{rel}) K_i}{K_i} \qquad 2.4\text{-}20$$

where

K_i = value of K_i for Xe-133 (i = 1) from Table 5.

The minimum offgas holdup time is:

$$t_{holdup} = t_{ddly} + t_{rel} \qquad 2.4\text{-}21$$

When the system is operating normally; however, with all five holdup tanks in service, the holdup time is given by:

$$t_{holdup} = t_{ddly} + 4\, t_{fill} \qquad 2.4\text{-}22$$

2.5 Dose Parameters for Radioiodines, Particulates and Tritium

This section contains the methodology which was used to calculate the dose parameters for radioiodines, particulates, and tritium to show compliance with 10CFR20 and Appendix I of 10CFR50 for gaseous effluents. These dose parameters, P_i and R_i were calculated using the methodology outlines in NUREG-0133 along with Regulatory Guide 1.109 Revision 1. The following sections provide the specific methodology which was utilized in calculating the P_i and R_i values for the various exposure pathways.

2.5.1 Calculation of P_i

The parameter, P_i, contained in the radioiodine and particulates portion of Section 2.2, includes pathway transport parameters of the ith radionuclide, the receptor's usage of the pathway media and the dosimetry of the exposure. Pathway usage rates and the internal dosimetry are functions of the receptor's age; however, the child age group will always receive the maximum dose under the exposure conditions assumed.

A. Inhalation Pathway

$$P_{i_I} = K' (BR) DFA_i \qquad 2.5\text{-}1$$

where

P_{i_I} = dose parameter for radionuclide i for the inhalation pathway, mrem/yr per μCi/m^3;

K' = a constant of unit conversion,

= 10^6 pCi/μCi;

BR = the breathing rate of the child age group, m^3/yr

DFA_i = the maximum organ inhalation dose factor for the child age group for radionuclide i, mrem/pCi.

The age group considered is the child group. The child's breathing rate is taken as 3700 m^3/yr from Table E-5 of Regulatory Guide 1.109 Revision 1. The inhalation dose factors for the child, DFA_i, are presented in Table E-9 of Regulatory Guide 1.109 in units of mrem/pCi. The total body is considered as an organ in the selection of DFA_i.

The incorporation of breathing rate of the child and the unit conversion factor results in the following:

$$P_{i_l} = 3.7E9 \times DFA_i \qquad 2.5\text{-}2$$

2.5.2 Calculation of R_i

The radioiodine and particulate Control 2.3.1.A. is applicable to the location in the unrestricted area where the combination of existing pathways and receptor age groups indicates the maximum potential exposure occurs. The inhalation and ground plane exposure pathways ***SHALL*** be considered to exist at all locations. The grass-goat-milk, the grass-cow-milk, grass-cow-meat, and vegetation pathways are considered based on their existence at the various locations. R_i values have been calculated for the adult, teen, child, and infant age groups for the ground plane, cow milk, goat milk, vegetable and beef ingestion pathways. The methodology which was utilized to calculate these values is presented below.

A. Inhalation Pathway

$$R_{i_l} = K'(BR)_a\,(DFA_i)_a \qquad 2.5\text{-}3$$

where

R_{i_l} = dose factor for each identified radionuclide i of the organ of interest, mrem/yr per $\mu Ci/m^3$;

K' = a constant of unit conversion,

= 10^6 pCi/μCi;

$(BR)_a$ = breathing rate of the receptor of age group a, m^3/yr;

$(DFA_i)_a$ = organ inhalation dose factor for radionuclide i for the receptor of age group a, mrem/pCi.

The breathing rates $(BR)_a$ for the various age groups are tabulated below, as given in Table E-5 of the Regulatory Guide1.109 Revision 1.

Age Group (a)	Breathing Rate (m^3/yr)
Infant	1400
Child	3700
Teen	8000
Adult	8000

Inhalation dose factors $(DFA_i)_a$ for the various age groups are given in Tables E-7 through E-10 of Regulatory Guide 1.109 Revision 1.

B. Ground Plane Pathway

$$R_{iG} = \frac{I_i K' K'' (SF) DFG_i (1-e^{-\lambda t})}{\lambda_i} \qquad 2.5\text{-}4$$

where

R_{iG} = dose factor for the ground plane pathway for each identified radionuclide i for the organ of interest; mrem/yr per µCi/sec per m^{-2};

K' = a constant of unit conversion,

= 10^6 pCi/µCi;

K'' = a constant of unit conversion,

= 8760 hr/yr;

λ_i = the radiological decay constant for radionuclide i, sec^{-1};

t = the exposure time, sec,

= 4.73×10^8 sec (15 years);

DFG_i = the ground plane dose conversion factor for radionuclide i,

mrem/hr per pCi/m^2

SF = the shielding factor (dimensionless);

I_i = factor to account for fractional deposition of radionuclide i.

For radionuclides other than iodine, the factor I_i is equal to one. For radioiodines, the value of I_i may vary. However, a value of 1.0 was used in calculating the R values in Table 7.

A shielding factor of 0.7 is suggested in Table E-15 of Regulatory Guide 1.109 Revision 1. A tabulation of DFG_i values is presented in Table E-6 of Regulatory Guide 1.109 Revision 1.

C. Grass-Cow or Goat-Milk Pathway

$$R_{i_M} = I_i K' Q_F U_{ap} F_m (DFL_i)_a \, e^{-\lambda_i t_f} \left[f_p f_s \left[\frac{r(1-e^{-\lambda_{E_i} t_{ep}})}{Y_p \lambda_{E_i}} \right] + (1-f_p f_s) \left[\frac{r(1-e^{-\lambda_{E_i} t_{es}})}{Y_s \lambda_{E_i}} \right] + e^{-\lambda_i t_h} \right] \qquad 2.5\text{-}5$$

where

R_{i_M} = dose factor for the cow milk or goat milk pathway, for each identified radionuclide i for the organ of interest, mrem/yr per μCi/sec per m^{-2};

K′ = a constant of unit conversion,

= 10^6 pCi/μCi;

Q_F = the cow or goat feed consumption rate, kg/day (wet weight);

U_{ap} = the receptor's milk consumption rate for age group a, liters/yr;

Y_p = the agricultural productivity by unit area of pasture feed grass, kg/m^2

Y_s = the agricultural productivity by unit area of stored feed, kg/m^2

F_m = the stable element transfer coefficients, pCi/liter per pCi/day;

r = fraction of deposited activity retained on cow feed grass;

$(DFL_i)_a$ = the organ ingestion dose factor for radionuclide i for the receptor in age group a, mrem/pCi;

λ_{E_i} = $\lambda_i + \lambda_w$

λ_i = the radiological decay constant for radionuclide i, sec^{-1}

λ_w = the decay constant for removal of activity on leaf and plant surfaces by weathering, sec^{-1},

= 5.73×10^{-7} sec^{-1} (corresponding to a 14 day half-life);

t_f = the transport time from feed to cow or goat, to milk, to receptor, sec;

t_h = the transport time from harvest, to cow or goat, to consumption, sec;

t_b = period of time that activity builds up in soil, sec;

B_{iv} = concentration factor for uptake of radionuclide i from the soil by the edible parts of crops, pCi/kg (wet weight) per pCi/kg (dry soil);

P = effective surface density for soil, kg (dry soil)/m^2;

f_p = fraction of the year that the cow or goat is on pasture;

f_s = fraction of the cow feed that is pasture grass while the cow is on pasture;

t_{ep} = period of pasture grass and crop exposure during the growing season, sec;

t_{es} = period of crop exposure during the growing season (stored feed); sec;

I_i = factor to account for fractional deposition of radionuclide i.

For radionuclides other than iodine, the factor I_i is equal to one. For radioiodines, the value of I_i may vary. However, a value of 1.0 was used in calculating the R values Tables 14 through 21.

Milk cattle and goats are considered to be fed from two potential sources, pasture grass and stored feeds. Following the development in Regulatory Guide 1.109 Revision 1, the value of f_s is considered unity in lieu of site-specific information. The value of f_p is 0.500 based upon an 6 month grazing period.

Appendix C, Table 1 contains the appropriate parameter values and their source in Regulatory Guide 1.109 Revision 1.

The concentration of tritium in milk is based on the airborne concentration rather than the deposition. Therefore, the R_i is based on χ/Q:

$$R_{T_M} = K'K'''F_m Q_F U_{ap} (DFL_i)_a \; 0.75(0.5/H) \qquad 2.5\text{-}6$$

where

R_{T_M} = dose factor for the cow or goat milk pathway for tritium for the organ of interest, mrem/yr per mCi/m^3;

K''' = a constant of conversion,

= 10^3 gm/kg;

H = absolute humidity of the atmosphere, gm/m^3;

0.75 = the fraction of total feed that is water;

0.5 = the ratio of the specific activity of the feed grass water to the atmospheric water;

and the other parameters and values are as given above. A value for H of 8 grams/m^3, was used in lieu of site-specific information.

D. Grass-Cow-Meat Pathway

The integrated concentration in meat follows in a similar manner to the development for the milk pathway, therefore:

$$R_{i_B} = I_i K' Q_F U_{ap} F_m (DFL_i)_a \, e^{-\lambda_i t_f} \left[f_p f_s \left[\frac{r(1-e^{-\lambda_{E_i} t_{ep}})}{Y_p \lambda_{E_i}} \right] + (1-f_p f_s) \left[\frac{r(1-e^{-\lambda_{E_i} t_{es}})}{Y_s \lambda_{E_i}} \right] + e^{-\lambda_i t_h} \right] \qquad 2.5\text{-}7$$

where

R_{i_B} = dose factor for the meat ingestion pathway for radionuclide i for any organ of interest, mRem/yr per µCi/sec per m^{-2};

F_f = the stable element transfer coefficient, pCi/kg per pCi/day;,

U_{ap} = the receptor's milk consumption rate for age group a, liters/yr;

t_s = the transport time from slaughter to meat consumption, sec;

t_h = the transport time from harvest, to animal consumption, sec;

t_{ep} = period of pasture grass exposure during the growing season, sec;

t_{es} = period of crop exposure during the growing season (stored feed); sec;

I_i = factor to account for fractional deposition of radionuclide i.

For radionuclides other than iodine, the factor I_i is equal to one. For radioiodines, the value of I_i may vary. However, a value of 1.0 was used in calculating R values in Tables 11 through 13.

All other terms remain the same as defined in Equation 2.5-5. Appendix C, Table 2 contains the values which were used in calculating R_i for the meat pathway.

The concentration of tritium in meat is based on its airborne concentration rather than the deposition. Therefore, the R_i is based on χ/Q.

$$R_{T_B} = K'K'''F_f Q_F U_{ap} (DFL_i)_a \; 0.75(0.5/H) \qquad 2.5\text{-}8$$

where

R_{T_B} = dose factor for the meat ingestion pathway for tritium for any organ of interest, mrem/yr per mCi/m^3,

All other terms are defined in Equation 2.5-6 and 2.5-7, above.

E. Vegetation Pathway

The integrated concentration in vegetation consumed by man follows the expression developed in the derivation of the milk factor. Man is considered to consume two types of vegetation (fresh and stored) that differ only in the time period between harvest and consumption, therefore:

$$R_{i_V} = I_i K'(DFL_i)_a \left[U_a^L f_L e^{-\lambda_i t_L} \left[\frac{r(1-e^{-\lambda_E t_e}_i)}{Y_V \lambda_{E_i}} \right] + U_a^S f_g e^{-\lambda_i t_h} \left[\frac{r(1-e^{-\lambda_E t_e}_i}{Y_V \lambda_{E_i}} \right] \right] \qquad 2.5\text{-}9$$

where

R_{i_V} = dose factor for vegetable pathway for radionuclide i for the organ of interest, mrem/yr per µCi/sec per m^{-2};

K' = a constant of unit conversion,

= 10^6 pCi/µCi;

U_a^L = the consumption rate of fresh leafy vegetationby the receptor in age group a, kg/yr;

U_a^S = the consumption rate of stored vegetation by the receptor in age group a, kg/yr;

f_L = the fraction of the annual intake of fresh leafy vegetation grown locally;

f_g = the traction of the annual intake of stored vegetation grown locally;

t_L = the average time between harvest of leafy vegetation and its consumption, sec;

t_h = the average time between harvest of stored vegetation and its consumption, sec;

Y_v = the vegetation areal density, kg/m^2;

t_e = period of leafy vegetable exposure during growing season, sec;

I_i = factor to account for fractional deposition of radionuclide i.

For radionuclides other than iodine, the factor I_i is equal to one. For radioiodines, the value of I_i may vary. However, a value of 1.0 was used in calculating the R values in Tables 8 through 10. All other factors were defined above.

Appendix C, Table 3 presents the appropriate parameter values and their source in Regulatory Guide 1.109 Revision 1.

In lieu of site-specific data, default values for f_L and f_g, 1.0 and 0.76, respectively, were used in the calculation of R_i. These values were obtained from Table E-15 of Regulatory Guide 1.109 Revision 1.

The concentration of tritium in vegetation is based on the airborne concentration rather than the deposition. Therefore, the R_i is based on χ/Q:

$$R_{T_v} = K'K'''[U_a^L f_L = U_a^S f_g] (DFL_i)_a \; 0.75(0.5/H) \quad 2.5\text{-}10$$

where

R_{T_v} = dose factor for the vegetable pathway for tritium for any organ of interest, mrem/yr per mCi/m^3,

All other terms remain the same as those in Equations 2.5-6 and 2.5-9.

2.6 References

1. Deleted

2. Deleted

3. Monticello Nuclear Generating Plant Technical Specifications, TS-B.2.4-Radioactive Effluents, Specification 2.4.3F Rev. 25.

4. USNRC, Title 10, Code of Federal Regulation, Part 50, "Domestic Licensing of Production and Utilization Facilities", Appendix I, "Numerical Guides for Design Objectives and Limiting Conditions for Operation to Meet the Criterion 'As Low as is Reasonably Achievable' for Radioactive Material in Light-Water-Cooled Nuclear Power Reactor Effluents".

5. NSP - Monticello Nuclear Generating Plant, Appendix I Analysis - Supplement No. 1 - Docket No. 50-263, Table 2.1-3.

6. Boegli, J.S., et. al. Eds, "Preparation of Radiological Effluent Technical Specifications for Nuclear Power Plants, NUREG-0133, 1978, NTIS, Springfield Va.

7. Sangendorf, J.F. and J. T. Goll, "XOQDOQ - Program for the Meteorological Evaluation of Routine Effluent Releases at Nuclear Power Stations", NUREG-0324, 1977, USNRC, Washington, D.C.

8. USNRC, Regulatory Guide 1.109, "Calculation of Annual Doses to Man from Routine Releases of Reactor Effluents for the Purpose of Evaluating Compliance with 10 CFR 50, Appendix I", Rev. 1, Oct. 1977, USNRC, Washington.

9. USNRC, Regulatory Guide 1.111, "Methods for Estimating Atmospheric Transport and Dispersion of Gaseous Effluents in Routine Releases from Light-Water-Cooled Reactors", July 1977. USNRC, Washington, D.C.

10. EPA, Title 40, Code of Federal Regulations, Part 190 "Environmental Radiation Protection Standards for Nuclear Power Operations".

Figure 1 Gaseous Radwaste

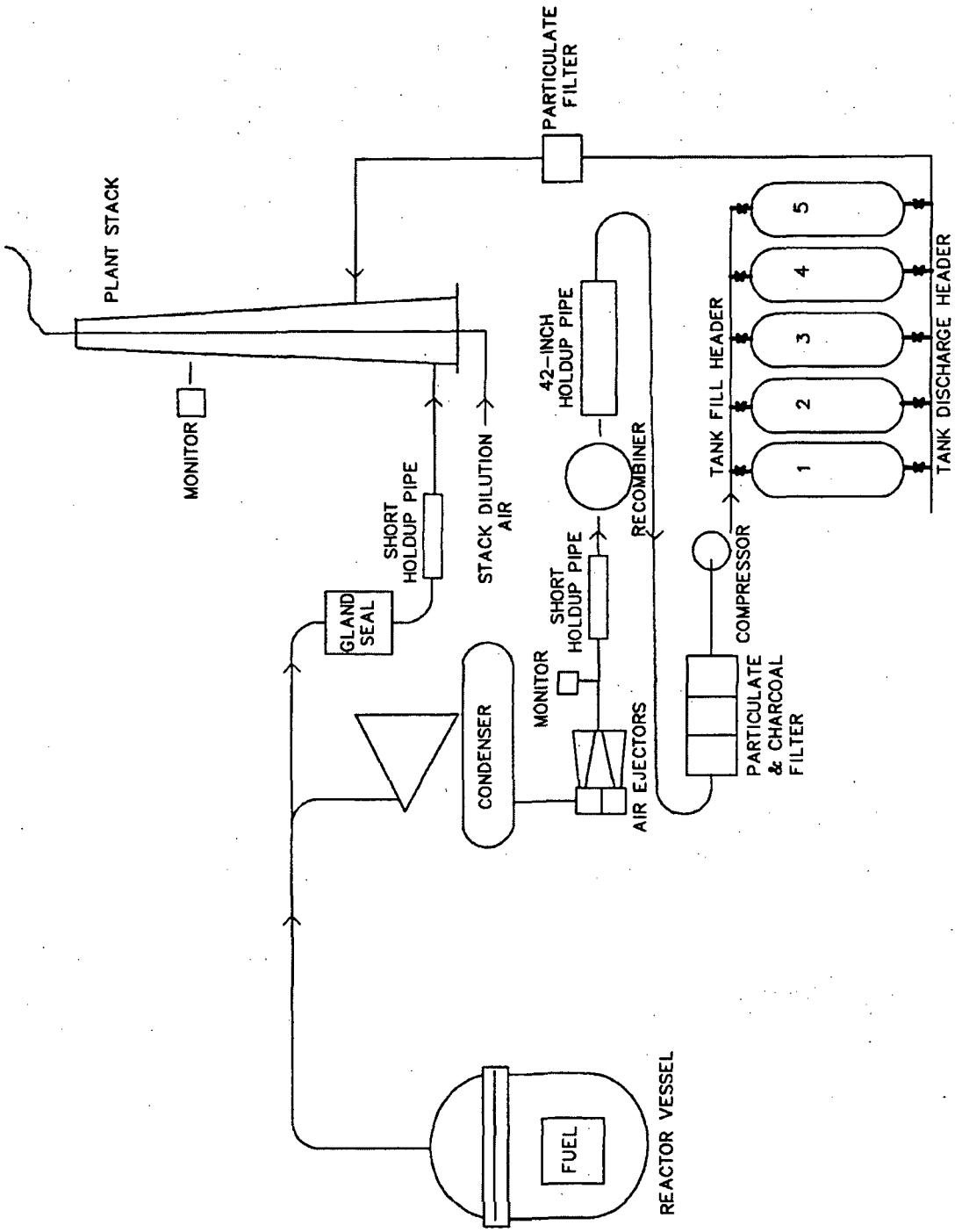

l/jlk

Figure 2 Ventilation System

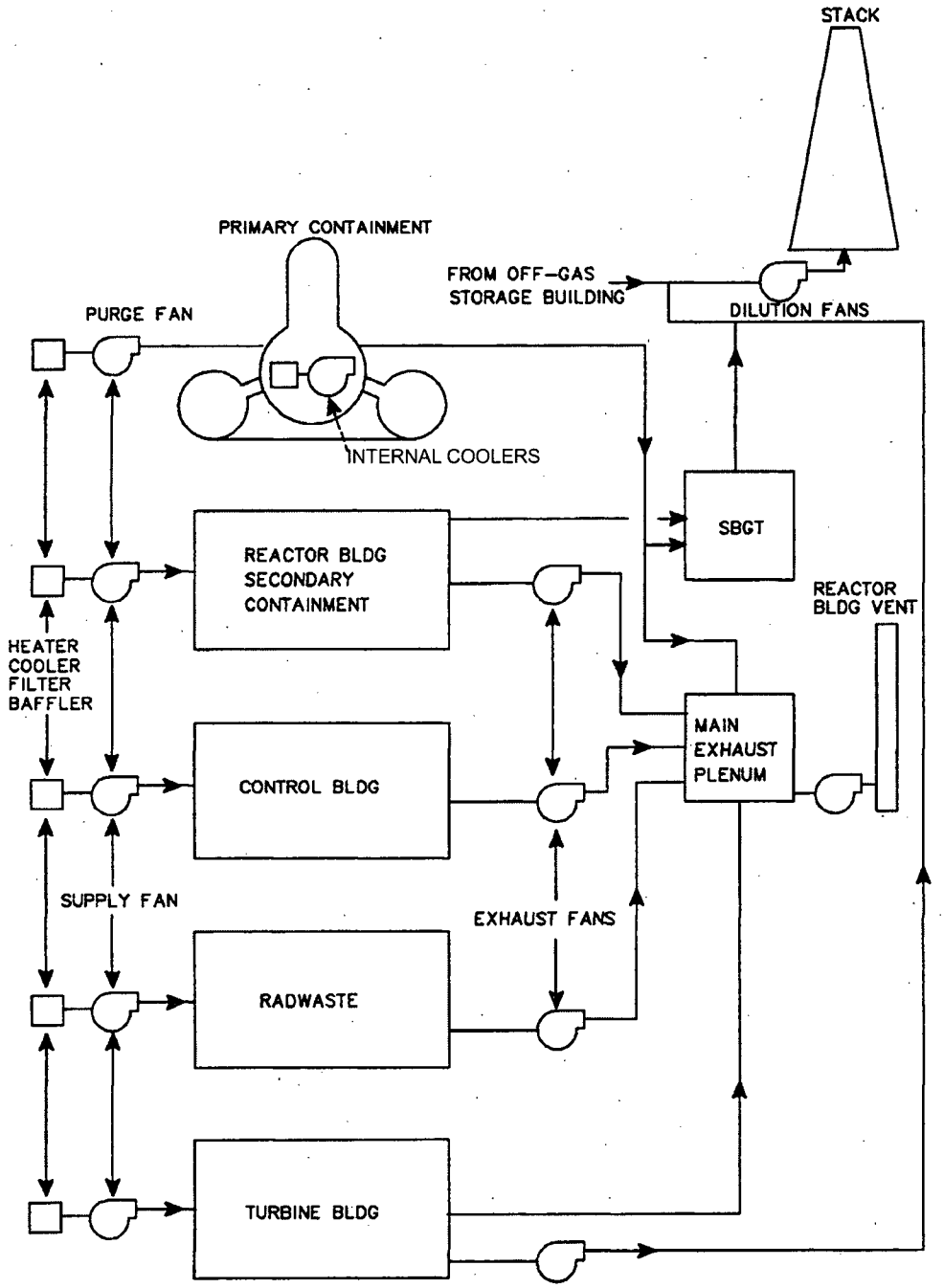

Table 1 Gaseous Source Terms(3) A_i, Ci/yr*

Radionuclide	Reactor Building Vent	Gland Seal	Mechanical Vacuum Pump	Gaseous Radwaste	Drywell Purging
Kr-83m	- -	2.3E 01	- -	- -	- -
Kr-85m	7.1E 01	4.1E 01	- -	- -	3.0E 00
Kr-85	- -	- -	- -	1.3E 02	- -
Kr-87	1.33E 02	1.4E 02	- -	- -	3.0E 00
Kr-88	2.33E 02	1.4E 02	- -	- -	3.0E 00
Kr-89	- -	6.0E 02	- -	- -	- -
Kr-90	- -	- -	- -	- -	- -
Xe-131m	- -	- -	- -	4.5E 01	- -
Xe-133m	- -	2.0E 00	- -	2.7E 01	- -
Xe-133	3.26E 02	5.6E 01	2.3E 03	8.9E 03	6.6E 01
Xe-135m	6.96E 02	1.7E 01	- -	- -	4.6E 01
Xe-135	7.09E 02	1.5E 02	3.5E 02	- -	3.4E 01
Xe-137	- -	7.3E 02	- -	- -	- -
Xe-138	1.41E 03	5.6E 02	- -	- -	7.0E 00
Xe-139	- -	- -	- -	- -	- -
Ar-41	- -	- -	- -	- -	- -
Total	3.58E 03	2.46E 03	2.65E 03	9.10E 03	1.62E 02

*These source terms were calculated in accordance with NUREG-0016 by using the USNRC "GALE" Code and approved for use at the Monticello Nuclear Plant.

Table 2 Dose Factors and Constants for the Total Body and Skin for Gaseous Radionuclides

Radionuclide	Total Whole Body Dose Factor K_i (mrem/yr per μCi/m³)	Total Skin Dose Factor $L +_i 1.1M_i$ (mrem/yr per μCi/m³)	Total Body Dose Constant for Long Term Releases V_i (mrem/yr per μCi/sec)
Kr-83m	7.56E-02	2.12E 01	2.61E-09
Kr-85m	1.17E 03	2.81E 03	1.39E-04
Kr-85	1.61E 01	1.36E 03	2.10E-06
Kr-87	5.92E 03	1.65E 04	6.33E-04
Kr-88	1.47E 04	1.91E 04	1.66E-03
Kr-89	1.66E 04	2.91E 04	1.12E-03
Kr-90	1.56E 04	2.52E 04	1.61E-04
Xe-131m	9.15E 01	6.48E 02	3.31E-05
Xe-133m	2.51E 02	1.35E 03	2.51E-05
Xe-133	2.94E 02	6.94E 02	2.61E-05
Xe-135m	3.12E 03	4.41E 03	3.34E-04
Xe-135	1.81E 03	3.97E 03	2.24E-04
Xe-137	1.42E 03	1.39E 04	9.99E-05
Xe-138	8.83E 03	1.43E 04	9.90E-04
Xe-139	5.02E 03	7.10E 04	5.79E-05
Ar-41	8.84E 03	1.29E 04	1.20E-03

Table 2 Dose Factors and Constants for the Total Body and Skin for Gaseous Radionuclides (cont'd)

Radionuclide	Total Body Dose Constant for Short Term Releases v_i (mrem/yr per μCi/sec)	Total Skin Dose Constant for Long Term Releases $L_i(\chi/Q)_s.1.1B_i$* (mrem)/yr per μCi/sec)	Total Dose Constant for Short Term Releases $L_i(\chi/q)_s.1.1b_i$* (mrem)/yr per μCi/sec)
Kr-83m	2.99E-09	4.15E-07	4.75E-07
Kr-85m	1.59E-04	3.90E-04	7.07E-04
Kr-85	2.40E-06	1.52E-04	4.14E-04
Kr-87	7.25E-04	2.13E-03	4.18E-03
Kr-88	1.90E-03	3.00E-03	4.86E-03
Kr-89	1.28E-03	2.97E-03	5.20E-03
Kr-90	1.85E-04	1.08E-03	2.54E-03
Xe-131m	3.79E-05	1.10E-04	2.11E-04
Xe-133m	2.87E-05	1.55E-04	3.56E-04
Xe-133	2.99E-05	7.88E-05	1.45E-04
Xe-135m	3.82E-04	6.36E-04	8.54E-04
Xe-135	2.57E-04	5.77E-04	9.94E-04
Xe-137	1.14E-04	1.52E-03	3.92E-03
Xe-138	1.13E-03	2.10E-03	3.13E-03
Xe-139	6.63E-05	7.33E-03	2.01E-02
Ar-41	1.57E-03	2.28E-03	3.10E-03

* $(\chi/Q)_s$, $(\chi/q)_s$, B_i, and b_i values obtained from other tables in the ODCM.

Table 3 Air Ejector Monitor Trip Setting and Storage Tank Contents Storage Tank Activity in Dose Equivalent Curies Xe-133 12 Hours After Completion of Tank Fill Release Rate Set to 1.00 of Maximum Trip Setting

Recoil/Diff/Eq	Qtot(5 Min)	Qtot(30 Min)	Condenser Air Inleakage, CFM 3	6	9	12	15	18	21	24	27	30
1.0 0.0 0.0	2.149E 06	2.600E 05	956.	1492.	1806.	1970	2045.	2068.	2062.	2039.	2005.	1965.
0.9 0.1 0.0	1.876E 06	2.600E 05	2008.	2459.	2743.	2880.	2923.	2912.	2872.	2815.	2750.	2680.
0.9 0.0 0.1	2.042E 06	2.600E 05	2480.	2585.	2702.	2747.	2738.	2697.	2639.	2572.	2502.	2431.
0.8 0.2 0.0	1.664E 06	2.600E 05	2823.	3206.	3469.	3584.	3602.	3565.	3499.	3416.	3326.	3234.
0.8 0.1 0.1	1.772E 06	2.600E 05	3371.	3444.	3556.	3589.	3558.	3490.	3403.	3308.	3209.	3111.
0.8 0.2 0.2	1.925E 06	2.600E 05	4145.	3779.	3680.	3595.	3495.	3384.	3269.	3155.	3045.	2939.
0.7 0.3 0.0	1.495E 06	2.600E 05	3471.	3802.	4046.	4144.	4143.	4086.	3998.	3895.	3785.	3674.
0.7 0.2 0.1	1.565E 06	2.600E 05	4053.	4102.	4211.	4233.	4186.	4098.	3989.	3871.	3751.	3633.
0.7 0.1 0.2	1.661E 06	2.600E 05	4842.	4507.	4434.	4554.	4243.	4114.	3977.	3840.	3705.	3576.
0.7 0.0 0.3	1.797E 06	2.600E 05	5971.	5088.	4752.	4526.	4325.	4137.	3960.	3794	3640.	3496.
0.6 0.4 0.0	1.385E 06	2.600E 05	4000.	4288.	4517.	4602.	4585.	4510.	4405.	4285.	4160.	4034.
0.6 0.3 0.1	1.402E 06	2.600E 05	4593.	4621.	4728.	4743.	4682.	4578.	4452.	4317.	4180.	4045.
0.6 0.2 0.2	1.460E 06	2.600E 05	5370.	5059.	5005.	4928.	4810.	4667.	4514.	4358.	4206.	4060.
0.6 0.1 0.3	1.540E 06	2.600E 05	6435.	5659.	5383.	5182.	4985.	4789.	4598.	4415.	4242.	4080.
0.6 0.0 0.4	1.655E 06	2.600E 05	7982.	6530.	5934.	5551.	5240.	4967.	4721.	4498.	4295.	4109.
0.5 0.5 0.0	1.243E 06	2.600E 05	4440.	4691.	4909.	4982.	4951.	4862.	4743.	4609.	4471.	4332.
0.5 0.4 0.1	1.270E 06	2.600E 05	5030.	5043.	5148.	5156.	5084.	4967.	4827.	4678.	4527.	4379.
0.5 0.3 0.2	1.303E 06	2.600E 05	5784.	5492.	5453.	5379.	5254.	5101.	4934.	4765.	4599.	4439.
0.5 0.2 0.3	1.347E 06	2.600E 05	6782.	6086.	5856.	5673.	5479.	5278.	5076.	4881.	4694.	4518.
0.5 0.1 0.4	1.408E 06	2.600E 05	8165.	6909.	6415.	6082.	5791.	5523.	5273.	5041.	4826.	4627.
0.5 0.0 0.5	1.498E 06	2.600E 05	10208.	8126.	7241.	6685.	6552.	5885.	5663.	5277.	5021.	4788.
0.4 0.6 0.0	1.147E 06	2.600E 05	4811.	5032.	5240.	5302.	5261.	5160.	5028.	4883.	4733.	4584.
0.4 0.5 0.1	1.160E 06	2.600E 05	5391.	5391.	5494.	5497.	5417.	5289.	5137.	4976.	4814.	4655.
0.4 0.4 0.2	1.176E 06	2.600E 05	6118.	5840.	5813.	5741.	5612.	5450.	5273.	5092.	4915.	4744.
0.4 0.3 0.3	1.197E 06	2.600E 05	7052.	6418.	6223.	6055.	5864.	5657.	5448.	5242.	5045.	4858.
0.4 0.2 0.4	1.225E 06	2.600E 05	8300.	7190.	6771.	6475.	6199.	5934.	5681.	5442.	5218.	5010.
0.4 0.1 0.5	1.265E 06	2.600E 05	10051.	8273.	7540.	7063.	6670.	6322.	6008.	5723.	5462.	5223.
0.4 0.0 0.6	1.324E 06	2.600E 05	12686.	9902.	8697.	7948.	7378.	6907.	6501.	6145.	5828.	5544.

Table 3 Air Ejector Monitor Trip Setting and Storage Tank Contents Storage Tank Activity in Dose Equivalent Curies Xe-133 12 Hours After Completion of Tank Fill Release Rate Set to 1.00 of Maximum Trip Setting (cont'd)

Recoil/Diff/Eq			Qtot(5 Min)	Qtot(30 Min)	Condenser Air Inleakage, CFM 3	6	9	12	15	18	21	24	27	30
0.3	0.7	0.0	1.064E 06	2.600E 05	5148.	5324.	5522.	5577.	5526.	5415.	5273.	5117.	4948.	4800.
0.3	0.6	0.1	1.068E 06	2.600E 05	5695.	5684.	5786.	5784.	5697.	5559.	5398.	5227.	5055.	4887.
0.3	0.5	0.2	1.072E 06	2.600E 05	6392.	6127.	6110.	6040.	5907.	5737.	5551.	5362.	5175.	4995.
0.3	0.4	0.3	1.078E 06	2.600E 05	7268.	6684.	6517.	6361.	6171.	5961.	5744.	5531.	5325.	5129.
0.3	0.3	0.4	1.085E 06	2.600E 05	8404.	7406.	7046.	6777.	6513.	6251.	5995.	5751.	5521.	5304.
0.3	0.2	0.5	1.092E 06	2.600E 05	9937.	8380.	7758.	7338.	6975.	6642.	6333.	6047.	5784.	5540.
0.3	0.1	0.6	1.108E 06	2.600E 05	12115.	9765.	8771.	8136.	7632.	7197.	6813.	6469.	6158.	5876.
0.3	0.0	0.7	1.129E 06	2.600E 05	15459.	11891.	10326.	9361.	8639.	8051.	7550.	7115.	6732.	6391.
0.2	0.8	0.0	9.929E 05	2.600E 05	5403.	5576.	5767.	5814.	5755.	5635.	5484.	5320.	5153.	4987.
0.2	0.7	0.1	9.894E 05	2.600E 05	5954.	5934.	6034.	6029.	5935.	5790.	5620.	5441.	5261.	5085.
0.2	0.6	0.2	9.052E 05	2.600E 05	6621.	6366.	6358.	6289.	6153.	5977.	5784.	5587.	5393.	5204.
0.2	0.5	0.3	9.799E 05	2.600E 05	7444.	6901.	6757.	6610.	6422.	6209.	5987.	5768.	5555.	5352.
0.2	0.4	0.4	9.733E 05	2.600E 05	8487.	7577.	7263.	7017.	6762.	6502.	6244.	5996.	5760.	5538.
0.2	0.3	0.5	9.646E 05	2.600E 05	9849.	8462.	7924.	7548.	7207.	6885.	6508.	6295.	6029.	5782.
0.2	0.2	0.6	9.528E 05	2.600E 05	11706.	9667.	8825.	8272.	7814.	7406.	7038.	6702.	6395.	6114.
0.2	0.1	0.7	9.357E 05	2.600E 05	14384.	11405.	10124.	9316	8689	8159.	7698.	7289.	6923.	6593.
0.2	0.0	0.8	9.090E 05	2.600E 05	18586.	14132.	12163.	10954	10061	9340.	8734.	8210.	7751.	7345.
0.1	0.9	0.0	9.305E 05	2.600E 05	5643.	5796.	5981.	6022.	5955.	5827.	5669.	5497.	5322.	5150.
0.1	0.8	0.1	9.217E 05	2.600E 05	6178.	6149.	6249.	6240.	6141.	5989.	5812.	5625.	5439.	5256.
0.1	0.7	0.2	9.112E 05	2.600E 05	6816.	6570.	6568.	6501.	6362.	6181.	5982.	5778.	5577.	5383.
0.1	0.6	0.3	8.985E 05	2.600E 05	7591.	7082.	6957.	6818.	6631.	6415.	6190.	5964.	5964.	5537.
0.1	0.5	0.4	8.826E 05	2.600E 05	8554.	7717.	7440.	7212.	6995.	6706.	6447.	6195.	5955.	5728.
0.1	0.4	0.5	8.624E 05	2.600E 05	9781.	8526.	8055.	7713.	7309.	7076.	6775.	6490.	6222.	5972.
0.1	0.3	0.6	8.358E 05	2.600E 05	11397.	9593.	8865.	8374.	7951.	7564.	7207.	6877.	6573.	6293.
0.1	0.2	0.7	7.992E 05	2.600E 05	13625.	11062.	9982.	9284.	8723.	8236.	7802.	7411.	7058.	6736.
0.1	0.1	0.8	7.454E 05	2.600E 05	16890.	13216.	11619.	10619.	9856.	9222.	8675.	8194.	7768.	7385.
0.1	0.0	0.9	6.591E 05	2.600E 05	22138.	16679.	14250.	12764.	11676.	10805.	10077.	9453.	8909.	8428.
0.0	1.0	0.0	8.755E 05	2.600E 05	5855.	5990.	6169.	6205.	6132.	5997.	5832.	5653.	5472.	5293.
0.0	0.9	0.1	8.628E 05	2.600E 05	6372.	6336.	6435.	6424.	6320.	6162.	5979.	5786.	5593.	5405.
0.0	0.8	0.2	8.477E 05	2.600E 05	6983.	6745.	6750.	6683.	6542.	6357.	6152.	5943.	5732.	5536.
0.0	0.7	0.3	8.296E 05	2.600E 05	7716.	7235.	7126.	6994.	6808.	6590.	6361.	6131.	5908.	5694.
0.0	0.6	0.4	8.075E 05	2.600E 05	8610.	7832.	7586.	7373.	7133.	6875.	6615.	6360.	6117.	5886.

Table 3 Air Ejector Monitor Trip Setting and Storage Tank Contents Storage Tank Activity in Dose Equivalent Curies Xe-133 12 Hours After Completion of Tank Fill Release Rate Set to 1.00 of Maximum Trip Setting (cont'd)

					Condenser Air Inleakage, CFM									
Recoil/Diff/Eq			Qtot(5 Min)	Qtot(30 Min)	3	6	9	12	15	18	21	24	27	30
0.0	0.5	0.5	7.799E 05	2.600E 05	9725	8578.	8160.	7846.	7538.	7231.	6932.	6647.	6378.	6126.
0.0	0.4	0.6	7.446E 05	2.600E 05	11156.	9533.	8897.	8454.	8058.	7687.	7339.	7014.	6713.	6433.
0.0	0.3	0.7	6.976E 05	2.600E 05	13059.	10807.	9876.	9261.	8749.	8293.	7880.	7508.	7158.	6843.
0.0	0.2	0.8	6.320E 05	2.600E 05	15713.	12581.	11241.	10386.	9713.	9139.	8634.	8184.	7779.	7413.
0.0	0.1	0.9	5.342E 05	2.600E 05	19670.	15227.	13277.	12065.	11151.	10401.	9759.	9200.	8705.	8264.
0.0	0.0	1.0	3.727E 05	2.600E 05	26207.	19597.	16640.	14838.	13527.	12484.	11617.	10878.	10235.	9670.

Table 4 Child Critical Organ Dose Parameters for Radionuclide i for the Inhalation Pathway

Nuclide	P_{i_I} mrem/yr per µCi/m³
H-3	1.12E 03
Cr-51	1.70E 04
Mn-54	1.58E 06
Fe-59	1.27E 06
Co-58	1.11E 06
Co-60	7.07E 06
Zn-65	9.95E 05
Rb-86	1.98E 05
Sr-89	2.16E 06
Sr-90	1.01E 08
Y-91	2.63E 06
Zr-95	2.23E 06
Nb-95	6.14E 05
Ru-103	6.62E 05
Ru-106	1.43E 07
Ag-110m	5.48E 06
Te-127m	1.48E 06
Te-129m	1.76E 06
Cs-134	1.01E 06
Cs-136	1.71E 05
Cs-137	9.07E 05
Ba-140	1.74E 06
Ce-141	5.44E 05
Ce-144	1.20E 07
I-131	1.62E 07
I-133	3.85E 06
I-135	7.92E 05

Table 5 Dose Factors for Noble Gases and Daughters That May Be Detected in Gaseous Effluents

Radionuclide	Total Body Dose Factor K_i mrem/yr µCi/m³	Skin Dose Factor L_i mrem/yr µCi/m³	Gamma Air Dose Factor M_i mrad/yr µCi/m³	Beta Air Dose Factor N_i mrad/yr µCi/m³
Kr-83m	7.56E-02	--	1.93E+01	2.88E+02
Kr-85m	1.17E+03	1.46E+03	1.23E+03	1.97E+03
Kr-85	1.61E+01	1.34E+03	1.72E+01	1.95E+03
Kr-87	5.92E+03	9.73E+03	6.17E+03	1.03E+04
Kr-88	1.47E+04	2.37E+03	1.52E+04	2.93E+03
Kr-89	1.66E+04	1.01E+04	1.73E+04	1.06E+04
Kr-90	1.56E+04	7.29E+03	1.63E+04	7.83E+03
Xe-131m	9.15E+01	4.76E+02	1.56E+02	1.11E+03
Xe-133m	2.51E+02	9.94E+02	3.27E+02	1.48E+03
Xe-133	2.94E+02	3.06E+02	3.53E+02	1.05E+03
Xe-135m	3.12E+03	7.11E+02	3.36E+03	7.39E+02
Xe-135	1.81E+03	1.86E+03	1.92E+03	2.46E+03
Xe-137	1.42E+03	1.22E+04	1.51E+03	1.27E+04
Xe-138	8.83E+03	4.13E+03	9.21E+03	4.75E+03
Xe-139	5.02E+03	6.52E+04	5.28E+03	6.52E+04
Ar-41	8.84E+03	2.69E+03	9.30E+03	3.28E+03

Table 6 Dose Parameters for Finite Evaluated Plumes for the Critical Boundary Location 0.51 mi from the Stack in the SSE Sector

	Long Term Release*		Short Term Release**	
Noble Gas Radionuclide	Total Body V_i mrem/yr / Ci/sec	Gamma Air B_i mrad/yr / Ci/sec	Total Body v_i mrem/yr / Ci/sec	Gamma Air b_i mrad/yr / Ci/sec
Kr-83m	2.61E-09	3.77E-07	2.99E-09	4.32E-07
Kr-85m	1.39E-04	2.07E-04	1.59E-04	2.37E-04
Kr-85	2.10E-06	3.18E-06	2.40E-06	3.64E-06
Kr-87	6.33E-04	9.52E-04	7.25E-02	1.09E-03
Kr-88	1.66E-03	2.49E-03	1.90E-03	2.85E-03
Kr-89	1.12E-03	1.68E-03	1.28E-03	1.92E-03
Kr-90	1.61E-04	2.42E-04	1.85E-04	2.78E-04
Xe-131m	3.31E-05	5.21E-05	3.79E-05	5.97E-05
Xe-133m	2.51E-05	4.09E-05	2.87E-05	4.68E-05
Xe-133	2.61E-05	4.08E-05	2.99E-05	4.67E-05
Xe-135m	3.34E-04	5.06E-04	3.82E-04	5.79E-04
Xe-135	2.24E-04	3.37E-04	2.57E-04	3.89E-04
Xe-137	9.99E-05	1.51E-04	1.14E-04	1.73E-04
Xe-138	9.90E-04	1.49E-03	1.13E-03	1.70E-03
Xe-139	5.79E-05	8.69E-05	6.63E-05	9.95E-05
Ar-41	1.20E-03	1.80E-03	1.38E-03	2.07E-03

* Values are annual average

** Values are for 144 hours per year purge.

Table 7 R_i Values for the Monticello Nuclear Generating Plant Ground Pathway

Nuclide	T. Body	GI Tract	Bone	Liver	Kidney	Thyroid	Lung	Skin
Cr-51	4.66E 06	4.66E 06	4.66E 06	4.66E 06	4.66E 06	4.66E 06	4.66E 06	5.51E 06
Mn-54	1.34E 09	1.34E 09	1.34E 09	1.34E 09	1.34E 09	1.34E 09	1.34E 09	1.57E 09
Fe-59	2.75E 08	2.75E 08	2.75E 08	2.75E 08	2.75E 08	2.75E 08	2.75E 08	3.23E 08
Co-58	3.79E 08	3.79E 08	3.79E 08	3.79E 08	3.79E 08	3.79E 08	3.79E 08	4.44E 08
Co-60	2.15E 10	2.15E 10	2.15E 10	2.15E 10	2.15E 10	2.15E 10	2.15E 10	2.52E 10
Zn-65	7.49E 08	7.49E 08	7.49E 08	7.49E 08	7.49E 08	7.49E 08	7.49E 08	8.69E 10
Sr-89	2.23E 04	2.23E 04	2.23E 04	2.23E 04	2.23E 04	2.23E 04	2.23E 04	2.58E 04
Zr-95	2.49E 08	2.49E 08	2.49E 08	2.49E 08	2.49E 08	2.49E 08	2.49E 08	2.89E 08
I-131	1.72E 07	1.72E 07	1.72E 07	1.72E 07	1.72E 07	1.72E 07	1.72E 07	2.09E 07
I-133	2.47E 06	2.47E 06	2.47E 06	2.47E 06	2.47E 06	2.47E 06	2.47E 06	3.00E 06
I-135	2.52E 06	2.52E 06	2.52E 06	2.52E 06	2.52E 06	2.52E 06	2.52E 06	2.94E 06
Cs-134	6.82E 09	6.82E 09	6.82E 09	6.82E 09	6.82E 09	6.82E 09	6.82E 09	7.96E 09
Cs-136	1.49E 08	1.49E 08	1.49E 08	1.49E 08	1.49E 08	1.49E 08	1.49E 08	1.69E 08
Cs-137	1.03E 10	1.03E 10	1.03E 10	1.03E 10	1.03E 10	1.03E 10	1.03E 10	1.20E 10
Ba-140	2.05E 07	2.05E 07	2.05E 07	2.05E 07	2.05E 07	2.05E 07	2.05E 07	2.34E 07
Ce-141	1.36E 07	1.36E 07	1.36E 07	1.36E 07	1.36E 07	1.36E 07	1.36E 07	1.53E 07
Ce-144	6.96E 07	6.96E 07	6.96E 07	6.96E 07	6.96E 07	6.96E 07	6.96E 07	8.04E 07
Nb-95	1.36E 08	1.36E 08	1.36E 08	1.36E 08	1.36E 08	1.36E 08	1.36E 08	1.60E 08
Ru-103	1.08E 08	1.08E 08	1.08E 08	1.08E 08	1.08E 08	1.08E 08	1.08E 08	1.26E 08

* R_i values are in units of mRem/yr per $\mu Ci/m^3$ for inhalation and tritium, and in units of m^2 mRem/yr per μCi/Sec for all others.

Table 8 R_i Values for the Monticello Nuclear Generating Plant Vegetable Pathway Adult Age Group

Nuclide	T. Body	GI Tract	Bone	Liver	Kidney	Thyroid	Lung	Skin
H-3	2.28E 03	2.28E 03	0.00E 00	2.28E 03	2.28E 03	2.28E 03	2.28E 03	2.28E 03
Cr-51	4.60E 04	1.16E 07	0.00E 00	0.00E 00	1.01E 04	2.75E 04	6.10E 04	0.00E 00
Mn-54	5.83E 07	9.36E 08	0.00E 00	3.05E 08	9.09E 07	0.00E 00	0.00E 00	0.00E 00
Fe-59	1.12E 08	9.75E 08	1.24E 08	2.93E 08	0.00E 00	0.00E 00	8.17E 07	0.00E 00
Co-58	6.71E 07	6.07E 08	0.00E 00	2.99E 07	0.00E 00	0.00E 00	0.00E 00	0.00E 00
Co-60	3.67E 08	3.12E 09	0.00E 00	1.66E 08	0.00E 00	0.00E 00	0.00E 00	0.00E 00
Zn-65	5.77E 08	8.04E 08	4.01E 08	1.28E 09	8.54E 08	0.00E 00	0.00E 00	0.00E 00
Sr-89	2.87E 08	1.60E 09	1.00E 10	0.00E 00	0.00E 00	0.00E 00	0.00E 00	0.00E 00
Sr-90	1.64E 11	1.93E 10	6.70E 11	0.00E 00	0.00E 00	0.00E 00	0.00E 00	0.00E 00
Zr-95	2.51E 05	1.17E 09	1.16E 06	3.71E 05	5.82E 05	0.00E 00	0.00E 00	0.00E 00
I-131	6.61E 07	3.04E 07	8.07E 07	1.15E 08	1.98E 08	3.78E 10	0.00E 00	0.00E 00
I-133	1.12E 06	3.30E 06	2.11E 06	3.67E 06	6.40E 06	5.39E 09	0.00E 00	0.00E 00
I-135	3.73E 04	1.14E 05	3.86E 04	1.01E 05	1.62E 05	6.67E 06	0.00E 00	0.00E 00
Cs-134	8.83E 09	1.89E 08	4.54E 09	1.08E 10	3.49E 09	0.00E 00	1.16E 09	0.00E 00
Cs-136	1.19E 08	1.88E 07	4.19E 07	1.66E 08	9.21E 07	0.00E 00	1.26E 07	0.00E 00
Cs-137	5.94E 08	1.76E 08	6.63E 09	9.07E 09	3.08E 09	0.00E 00	1.02E 09	0.00E 00
Ba-140	8.40E 06	2.64E 08	1.28E 08	1.61E 05	5.47E 04	0.00E 00	9.22E 04	0.00E 00
Ce-141	1.48E 04	4.99E 08	1.93E 05	1.31E 05	6.07E 04	0.00E 00	0.00E 00	0.00E 00
Ce-144	1.69E 06	1.07E 10	3.15E 07	1.32E 07	7.82E 06	0.00E 00	0.00E 00	0.00E 00
Nb-95	4.19E 04	4.73E 08	1.40E 05	7.80E 04	7.71E 04	0.00E 00	0.00E 00	0.00E 00
Ru-103	2.03E 06	5.51E 08	4.72E 06	0.00E 00	1.80E 07	0.00E 00	0.00E 00	0.00E 00

* R_i values are in units of mRem/yr per $\mu Ci/m^3$ for inhalation and tritium, and in units of m^2 mRem/yr per $\mu Ci/Sec$ for all others.

Table 9. R_i Values for the Monticello Nuclear Generating Plant Vegetable Pathway Teen Age Group

Nuclide	T. Body	GI Tract	Bone	Liver	Kidney	Thyroid	Lung	Skin
H-3	2.61E 03	2.61E 03	0.00E 00	2.61E 03	2.61E 03	2.61E 03	2.61E 03	2.61E 03
Cr-51	6.11E 04	1.03E 07	0.00E 00	0.00E 00	1.34E 04	3.39E 04	8.72E 04	0.00E 00
Mn-54	8.79E 07	9.09E 08	0.00E 00	4.43E 08	1.32E 08	0.00E 00	0.00E 00	0.00E 00
Fe-59	1.60E 08	9.78E 08	1.77E 08	4.14E 08	0.00E 00	0.00E 00	1.30E 08	0.00E 00
Co-58	9.79E 07	5.85E 08	0.00E 00	4.25E 07	0.00E 00	0.00E 00	0.00E 00	0.00E 00
Co-60	5.57E 08	3.22E 09	0.00E 00	2.47E 08	0.00E 00	0.00E 00	0.00E 00	0.00E 00
Zn-65	8.68E 08	7.88E 08	5.36E 08	1.86E 09	1.19E 08	0.00E 00	0.00E 00	0.00E 00
Sr-89	4.36E 08	1.81E 09	1.52E 10	0.00E 00	0.00E 00	0.00E 00	0.00E 00	0.00E 00
Sr-90	2.05E 11	2.33E 10	8.32E 11	0.00E 00	0.00E 00	0.00E 00	0.00E 00	0.00E 00
Zr-95	3.68E 05	1.23E 09	1.69E 06	5.35E 05	7.86E 05	0.00E 00	0.00E 00	0.00E 00
I-131	5.77E 07	2.13E 07	7.68E 07	1.07E 08	1.85E 08	3.14E 10	0.00E 00	0.00E 00
I-133	1.01E 06	2.51E 06	1.96E 06	3.32E 06	5.83E 06	4.64E 08	0.00E 00	0.00E 00
I-135	3.33E 04	9.96E 04	3.49E 04	8.98E 04	1.42E 05	5.78E 06	0.00E 00	0.00E 00
Cs-134	7.54E 09	2.02E 08	6.90E 09	1.62E 10	5.16E 10	0.00E 00	1.97E 09	0.00E 00
Cs-136	1.13E 08	1.35E 07	4.28E 07	1.68E 08	9.16E 07	0.00E 00	1.44E 07	0.00E 00
Cs-137	4.90E 09	2.00E 08	1.06E 10	1.41E 10	4.78E 09	0.00E 00	1.86E 09	0.00E 00
Ba-140	8.88E 06	2.12E 08	1.38E 08	1.69E 05	5.72E 04	0.00E 00	1.14E 05	0.00E 00
Ce-141	2.12E 04	5.29E 08	2.77E 05	1.85E 05	8.70E 04	0.00E 00	0.00E 00	0.00E 00
Ce-144	2.72E 06	1.27E 10	5.05E 07	2.09E 07	1.25E 07	0.00E 00	0.00E 00	0.00E 00
Nb-95	5.78E 04	4.49E 08	1.89E 05	1.05E 05	1.02E 05	0.00E 00	0.00E 00	0.00E 00
Ru-103	2.88E 06	5.64E 08	6.75E 06	0.00E 00	2.38E 07	0.00E 00	0.00E 00	0.00E 00

* R_i values are in units of mRem/yr per $\mu Ci/m^3$ for inhalation and tritium, and in units of m^2 mRem/yr per $\mu Ci/Sec$ for all others.

Table 10 R_i Values for the Monticello Nuclear Generating Plant Vegetable Pathway Child Age Group

Nuclide	T. Body	GI Tract	Bone	Liver	Kidney	Thyroid	Lung	Skin
H-3	4.04E 03	4.04E 03	0.00E 00	4.04E 03	4.04E 03	4.04E 03	4.04E 03	4.04E 03
Cr-51	1.16E 05	6.15E 06	0.00E 00	0.00E 00	1.76E 04	6.44E 04	1.18E 05	0.00E 00
Mn-54	1.73E 08	5.44E 08	0.00E 00	6.49E 08	1.82E 08	0.00E 00	0.00E 00	0.00E 00
Fe-59	3.17E 08	6.62E 08	3.93E 08	6.36E 08	0.00E 00	0.00E 00	1.84E 08	0.00E 00
Co-58	1.92E 08	3.66E 08	0.00E 00	6.27E 07	0.00E 00	0.00E 00	0.00E 00	0.00E 00
Co-60	1.11E 09	2.08E 09	0.00E 00	3.76E 08	0.00E 00	0.00E 00	0.00E 00	0.00E 00
Zn-65	1.70E 09	4.81E 08	1.03E 09	2.74E 09	1.73E 09	0.00E 00	0.00E 00	0.00E 00
Sr-89	1.03E 09	1.40E 09	3.62E 10	0.00E 00	0.00E 00	0.00E 00	0.00E 00	0.00E 00
Sr-90	3.49E 11	1.86E 10	1.38E 12	0.00E 00	0.00E 00	0.00E 00	0.00E 00	0.00E 00
Zr-95	7.44E 05	8.71E 08	3.80E 06	8.35E 05	1.20E 05	0.00E 00	0.00E 00	0.00E 00
I-131	8.16E 07	1.28E 07	1.43E 08	1.44E 08	2.36E 08	4.75E 10	0.00E 00	0.00E 00
I-133	1.67E 06	1.78E 06	3.57E 06	4.42E 06	7.36E 06	8.21E 08	0.00E 00	0.00E 00
I-135	5.28E 04	8.50E 04	6.20E 04	1.12E 05	1.71E 05	9.88E 06	0.00E 00	0.00E 00
Cs-134	5.40E 09	1.38E 08	1.56E 10	2.56E 10	7.93E 09	0.00E 00	2.84E 09	0.00E 00
Cs-136	1.43E 08	7.77E 06	8.04E 07	2.21E 08	1.18E 08	0.00E 00	1.76E 07	0.00E 00
Cs-137	3.52E 09	1.50E 08	2.40E 10	2.39E 10	7.78E 09	0.00E 00	2.80E 09	0.00E 00
Ba-140	1.61E 07	1.40E 08	2.76E 08	2.42E 05	7.87E 04	0.00E 00	1.44E 05	0.00E 00
Ce-141	4.75E 04	3.39E 08	6.42E 05	3.20E 05	1.40E 05	0.00E 00	0.00E 00	0.00E 00
Ce-144	6.50E 06	9.95E 09	1.22E 08	3.82E 07	2.11E 07	0.00E 00	0.00E 00	0.00E 00
Nb-95	1.12E 05	2.91E 08	4.04E 05	1.57E 05	1.48E 05	0.00E 00	0.00E 00	0.00E 00
Ru-103	5.83E 06	3.82E 08	1.52E 07	0.00E 00	3.82E 07	0.00E 00	0.00E 00	0.00E 00

* R_i values are in units of mRem/yr per $\mu Ci/m^3$ for inhalation and tritium, and in units of m^2 mRem/yr per $\mu Ci/Sec$ for all others.

Table 11 R_i Values for the Monticello Nuclear Generating Plant Meat Pathway Adult Age Group

Nuclide	T. Body	GI Tract	Bone	Liver	Kidney	Thyroid	Lung	Skin
H-3	3.27E 02	3.27E 02	0.00E 00	3.27E 02	3.27E 02	3.27E 02	3.27E 02	3.27E 02
Cr-51	3.26E 03	8.21E 05	0.00E 00	0.00E 00	7.19E 02	1.95E 03	4.33E 03	0.00E 00
Mn-54	8.98E 05	1.44E 07	0.00E 00	4.71E 06	1.40E 06	0.00E 00	0.00E 00	0.00E 00
Fe-59	1.12E 08	9.73E 08	1.24E 08	2.92E 08	0.00E 00	0.00E 00	8.16E 07	0.00E 00
Co-58	1.95E 07	1.76E 08	0.00E 00	8.68E 06	0.00E 00	0.00E 00	0.00E 00	0.00E 00
Co-60	8.87E 07	7.55E 08	0.00E 00	4.02E 07	0.00E 00	0.00E 00	0.00E 00	0.00E 00
Zn-65	3.06E 08	4.27E 08	2.13E 08	6.78E 08	4.53E 08	0.00E 00	0.00E 00	0.00E 00
Sr-89	4.12E 06	2.30E 07	1.43E 08	0.00E 00	0.00E 00	0.00E 00	0.00E 00	0.00E 00
Sr-90	1.76E 09	2.07E 08	7.17E 09	0.00E 00	0.00E 00	0.00E 00	0.00E 00	0.00E 00
Zr-95	1.94E 05	9.07E 08	8.92E 05	2.86E 05	4.49E 05	0.00E 00	0.00E 00	0.00E 00
I-131	4.33E 06	1.99E 06	5.28E 06	7.55E 06	1.29E 07	2.48E 09	0.00E 00	0.00E 00
I-133	1.13E-01	3.34E-01	2.14E-01	3.72E-01	6.49E-01	5.46E 01	0.00E 00	0.00E 00
I-135	1.78E-17	5.38E-17	1.82E-17	4.77E-17	7.64E-17	3.14E-15	0.00E 00	0.00E 00
Cs-134	6.68E 08	1.43E 07	3.43E 08	8.17E 08	2.64E 08	0.00E 00	8.78E 07	0.00E 00
Cs-136	1.61E 07	2.53E 06	5.65E 06	2.23E 07	1.24E 07	0.00E 00	1.70E 06	0.00E 00
Cs-137	4.33E 08	1.28E 07	4.83E 08	6.61E 08	2.24E 08	0.00E 00	7.46E 07	0.00E 00
Ba-140	9.01E 05	2.83E 07	1.38E 07	1.73E 04	5.87E 03	0.00E 00	9.89E 03	0.00E 00
Ce-141	4.96E 02	1.67E 07	6.47E 03	4.38E 03	2.03E 03	0.00E 00	0.00E 00	0.00E 00
Ce-144	3.94E 04	2.48E 08	7.34E 05	3.07E 05	1.82E 05	0.00E 00	0.00E 00	0.00E 00
Nb-95	3.00E 05	3.39E 09	1.01E 06	5.59E 05	5.52E 05	0.00E 00	0.00E 00	0.00E 00
Ru-103	2.00E 07	5.42E 09	4.64E 07	0.00E 00	1.77E 08	0.00E 00	0.00E 00	0.00E 00

* R_i values are in units of mRem/yr per $\mu Ci/m^3$ for inhalation and tritium, and in units of m^2 mRem/yr per $\mu Ci/Sec$ for all others.

Table 12 R_i Values for the Monticello Nuclear Generating Plant Meat Pathway Teen Age Group

Nuclide	T. Body	GI Tract	Bone	Liver	Kidney	Thyroid	Lung	Skin
H-3	1.95E 02	1.95E 02	0.00E 00	1.95E 02	1.95E 02	1.95E 02	1.95E 02	1.95E 02
Cr-51	2.61E 03	4.39E 05	0.00E 00	0.00E 00	5.72E 02	1.45E 03	3.75E 03	0.00E 00
Mn-54	7.12E 05	7.37E 06	0.00E 00	3.59E 06	1.07E 06	0.00E 00	0.00E 00	0.00E 00
Fe-59	8.95E 07	5.48E 08	9.93E 07	2.32E 08	0.00E 00	0.00E 00	7.31E 07	0.00E 00
Co-58	1.54E 07	9.22E 07	0.00E 00	6.69E 06	0.00E 00	0.00E 00	0.00E 00	0.00E 00
Co-60	7.03E 07	4.06E 08	0.00E 00	3.12E 07	0.00E 00	0.00E 00	0.00E 00	0.00E 00
Zn-65	2.43E 08	2.20E 08	1.50E 08	5.20E 08	3.33E 08	0.00E 00	0.00E 00	0.00E 00
Sr-89	3.47E 06	1.44E 07	1.21E 08	0.00E 00	0.00E 00	0.00E 00	0.00E 00	0.00E 00
Sr-90	1.15E 09	1.30E 08	4.64E 09	0.00E 00	0.00E 00	0.00E 00	0.00E 00	0.00E 00
Zr-95	1.55E 05	5.02E 08	7.15E 05	2.25E 05	3.31E 05	0.00E 00	0.00E 00	0.00E 00
I-131	3.30E 06	1.22E 06	4.39E 06	6.14E 06	1.06E 07	1.79E 09	0.00E 00	0.00E 00
I-133	9.25E-02	2.30E-01	1.79E-01	3.03E-01	5.32E-01	4.23E 01	0.00E 00	0.00E 00
I-135	1.41E-17	4.22E-17	1.48E-17	3.81E-17	6.02E-17	2.45E-17	0.00E 00	0.00E 00
Cs-134	2.98E 08	7.99E 06	2.73E 08	6.42E 08	2.04E 08	0.00E 00	7.79E 07	0.00E 00
Cs-136	1.16E 07	1.40E 06	4.41E 06	1.73E 07	9.44E 06	0.00E 00	1.49E 06	0.00E 00
Cs-137	1.86E 08	7.59E 06	4.01E 08	5.34E 08	1.82E 08	0.00E 00	7.06E 07	0.00E 00
Ba-140	7.33E 05	1.75E 07	1.14E 07	1.39E 04	4.72E 03	0.00E 00	9.37E 03	0.00E 00
Ce-141	4.17E 02	1.04E 07	5.43E 03	3.63E 03	1.71E 03	0.00E 00	0.00E 00	0.00E 00
Ce-144	3.32E 04	1.56E 08	6.18E 05	2.56E 05	1.53E 05	0.00E 00	0.00E 00	0.00E 00
Nb-95	2.39E 05	1.86E 09	7.84E 05	4.35E 05	4.22E 05	0.00E 00	0.00E 00	0.00E 00
Ru-103	1.62E 07	3.16E 09	3.79E 07	0.00E 00	1.33E 08	0.00E 00	0.00E 00	0.00E 00

* R_i values are in units of mRem/yr per $\mu Ci/m^3$ for inhalation and tritium, and in units of m^2 mRem/yr per $\mu Ci/Sec$ for all others.

Table 13 R_i Values for the Monticello Nuclear Generating Plant Meat Pathway Child Age Group

Nuclide	T. Body	GI Tract	Bone	Liver	Kidney	Thyroid	Lung	Skin
H-3	2.36E 02	2.36E 02	0.00E 00	2.36E 02	2.36E 02	2.36E 02	2.36E 02	2.36E 02
Cr-51	4.07E 03	2.16E 05	0.00E 00	0.00E 00	6.17E 02	2.26E 03	4.12E 03	0.00E 00
Mn-54	1.09E 05	3.45E 06	0.00E 00	4.11E 06	1.15E 06	0.00E 00	0.00E 00	0.00E 00
Fe-59	1.42E 08	2.79E 08	1.76E 08	2.85E 08	0.00E 00	0.00E 00	8.26E 07	0.00E 00
Co-58	2.39E 07	4.56E 07	0.00E 00	7.82E 06	0.00E 00	0.00E 00	0.00E 00	0.00E 00
Co-60	1.09E 08	2.05E 08	0.00E 00	3.70E 07	0.00E 00	0.00E 00	0.00E 00	0.00E 00
Zn-65	3.72E 08	1.05E 08	2.25E 08	5.99E 08	3.77E 08	0.00E 00	0.00E 00	0.00E 00
Sr-89	6.55E 06	8.87E 06	2.29E 08	0.00E 00	0.00E 00	0.00E 00	0.00E 00	0.00E 00
Sr-90	1.52E 09	8.08E 07	6.00E 09	0.00E 00	0.00E 00	0.00E 00	0.00E 00	0.00E 00
Zr-95	2.48E 05	2.91E 08	1.27E 06	2.79E 05	3.99E 05	0.00E 00	0.00E 00	0.00E 00
I-131	4.65E 06	7.29E 05	8.14E 06	8.19E 06	1.34E 07	2.71E 09	0.00E 00	0.00E 00
I-133	1.55E 01	1.66E 01	3.32E 01	4.11E 01	6.85E 01	7.63E 01	0.00E 00	0.00E 00
I-135	2.28E 17	3.67E 17	2.68E 17	4.82E 17	7.39E 17	4.27E 15	0.00E 00	0.00E 00
Cs-134	1.67E 08	4.26E 06	4.81E 08	7.90E 08	2.45E 08	0.00E 00	8.78E 07	0.00E 00
Cs-136	1.35E 07	7.34E 05	7.60E 06	2.09E 07	1.11E 07	0.00E 00	1.66E 06	0.00E 00
Cs-137	1.04E 08	4.43E 06	7.39E 08	7.07E 08	2.30E 08	0.00E 00	8.29E 07	0.00E 00
Ba-140	1.22E 06	1.06E 07	2.10E 07	1.84E 04	5.98E 03	0.00E 00	1.10E 04	0.00E 00
Ce-141	7.57E 02	6.36E 06	1.02E 04	5.10E 03	2.24E 03	0.00E 00	0.00E 00	0.00E 00
Ce-144	6.22E 04	9.53E 09	1.17E 06	3.66E 05	2.02E 05	0.00E 00	0.00E 00	0.00E 00
Nb-95	3.77E 05	9.74E 08	1.35E 06	5.27E 05	4.95E 05	0.00E 00	0.00E 00	0.00E 00
Ru-103	2.63E 07	1.77E 09	6.83E 07	0.00E 00	1.72E 08	0.00E 00	0.00E 00	0.00E 00

* R_i values are in units of mRem/yr per $\mu Ci/m^3$ for inhalation and tritium, and in units of m^2 mRem/yr per μCi/Sec for all others.

Table 14 R_i Values for the Monticello Nuclear Generating Plant Cow Milk Pathway Adult Age Group

Nuclide	T. Body	GI Tract	Bone	Liver	Kidney	Thyroid	Lung	Skin
H-3								
Cr-51	1.32E 04	3.32E 06	0.00E 00	0.00E 00	2.91E 03	7.90E 03	1.75E 04	0.00E 00
Mn-54	8.25E 05	1.32E 07	0.00E 00	4.32E 06	1.29E 06	0.00E 00	0.00E 00	0.00E 00
Fe-59	1.25E 07	1.09E 08	1.39E 07	3.26E 07	0.00E 00	0.00E 00	9.10E 06	0.00E 00
Co-58	5.03E 06	4.55E 07	0.00E 00	2.24E 06	0.00E 00	0.00E 00	0.00E 00	0.00E 00
Co-60	1.93E 07	1.65E 08	0.00E 00	8.77E 06	0.00E 00	0.00E 00	0.00E 00	0.00E 00
Zn-65	1.18E 09	1.65E 09	8.21E 08	2.61E 09	1.75E 09	0.00E 00	0.00E 00	0.00E 00
Sr-89	1.97E 07	1.10E 08	6.85E 08	0.00E 00	0.00E 00	0.00E 00	0.00E 00	0.00E 00
Sr-90	6.62E 09	7.80E 08	2.70E 10	0.00E 00	0.00E 00	0.00E 00	0.00E 00	0.00E 00
Zr-95	9.72E 01	4.55E 05	4.48E 02	1.44E 02	2.25E 02	0.00E 00	0.00E 00	0.00E 00
I-131	1.19E 08	5.49E 07	1.45E 08	2.08E 08	3.57E 08	6.82E 10	0.00E 00	0.00E 00
I-133	1.05E 06	3.09E 06	1.98E 06	3.44E 06	6.01E 06	5.06E 08	0.00E 00	0.00E 00
I-135	5.70E 03	1.74E 04	5.90E 03	1.54E 04	2.48E 04	1.02E 06	0.00E 00	0.00E 00
Cs-134	5.74E 09	1.23E 08	2.95E 09	7.02E 09	2.27E 09	0.00E 00	7.54E 08	0.00E 00
Cs-136	3.35E 08	5.60E 07	1.25E 08	4.93E 08	2.74E 08	0.00E 00	3.76E 07	0.00E 00
Cs-137	3.66E 09	1.08E 08	4.09E 09	5.59E 09	1.90E 09	0.00E 00	6.31E 08	0.00E 00
Ba-140	8.43E 05	2.65E 07	1.29E 07	1.62E 04	5.49E 03	0.00E 00	9.25E 03	0.00E 00
Ce-141	1.71E 02	5.78E 06	2.24E 03	1.51E 03	7.02E 02	0.00E 00	0.00E 00	0.00E 00
Ce-144	4.67E 03	6.09E 07	1.80E 05	7.53E 04	4.46E 04	0.00E 00	0.00E 00	0.00E 00
Nb-95	1.08E 04	1.22E 08	3.60E 04	2.01E 04	1.98E 04	0.00E 00	0.00E 00	0.00E 00
Ru-103	1.93E 02	5.24E 04	4.49E 02	0.00E 00	1.71E 03	0.00E 00	0.00E 00	0.00E 00

* R_i values are in units of mRem/yr per $\mu Ci/m^3$ for inhalation and tritium, and in units of m^2 mRem/yr per $\mu Ci/Sec$ for all others.

Table 15 R_i Values for the Monticello Nuclear Generating Plant Cow Milk Pathway Teen Age Group

Nuclide	T. Body	GI Tract	Bone	Liver	Kidney	Thyroid	Lung	Skin
H-3	1.00E 03	1.00E 03	0.00E 00	1.00E 03	1.00E 03	1.00E 03	1.00E 03	1.00E 03
Cr-51	2.31E 04	3.88E 06	0.00E 00	0.00E 00	5.06E 03	1.28E 04	3.30E 04	0.00E 00
Mn-54	1.43E 06	1.48E 07	0.00E 00	7.20E 06	2.15E 06	0.00E 00	0.00E 00	0.00E 00
Fe-59	2.18E 07	1.34E 08	2.42E 07	5.65E 07	0.00E 00	0.00E 00	1.78E 07	0.00E 00
Co-58	8.70E 06	5.12E 07	0.00E 00	3.78E 06	0.00E 00	0.00E 00	0.00E 00	0.00E 00
Co-60	3.35E 07	1.94E 08	0.00E 00	1.49E 07	0.00E 00	0.00E 00	0.00E 00	0.00E 00
Zn-65	2.04E 09	1.85E 09	1.26E 09	4.38E 09	2.80E 09	0.00E 00	0.00E 00	0.00E 00
Sr-89	3.62E 07	1.50E 08	1.26E 09	0.00E 00	0.00E 00	0.00E 00	0.00E 00	0.00E 00
Sr-90	9.42E 09	1.07E 09	3.81E 10	0.00E 00	0.00E 00	0.00E 00	0.00E 00	0.00E 00
Zr-95	1.70E 02	5.70E 05	7.83E 02	2.47E 02	3.63E 02	0.00E 00	0.00E 00	0.00E 00
I-131	1.98E 08	7.31E 07	2.64E 08	3.69E 08	6.36E 08	1.08E 11	0.00E 00	0.00E 00
I-133	1.87E 06	4.64E 06	3.61E 06	6.13E 06	1.08E 07	8.56E 08	0.00E 00	0.00E 00
I-135	9.99E 03	2.99E 04	1.05E 04	2.70E 04	4.26E 04	1.74E 06	0.00E 00	0.00E 00
Cs-134	5.60E 09	1.50E 08	5.12E 09	1.21E 10	3.83E 09	0.00E 00	1.46E 09	0.00E 00
Cs-136	5.62E 08	6.73E 07	2.13E 08	8.37E 08	4.55E 08	0.00E 00	7.18E 07	0.00E 00
Cs-137	3.44E 09	1.40E 08	7.42E 09	9.87E 09	3.36E 09	0.00E 00	1.30E 09	0.00E 00
Ba-140	1.50E 06	3.58E 07	2.32E 07	2.84E 04	9.65E 03	0.00E 00	1.91E 04	0.00E 00
Ce-141	3.14E 02	7.83E 06	4.10E 03	2.74E 03	1.29E 03	0.00E 00	0.00E 00	0.00E 00
Ce-144	1.78E 04	8.33E 07	3.31E 05	1.37E 05	8.19E 04	0.00E 00	0.00E 00	0.00E 00
Nb-95	1.88E 04	1.46E 07	6.16E 04	3.42E 04	3.31E 04	0.00E 00	0.00E 00	0.00E 00
Ru-103	3.41E 02	6.67E 04	7.99E 02	0.00E 00	2.82E 03	0.00E 00	0.00E 00	0.00E 00

* R_i values are in units of mRem/yr per $\mu Ci/m^3$ for inhalation and tritium, and in units of m^2 mRem/yr per $\mu Ci/Sec$ for all others.

Table 16 R_i Values for the Monticello Nuclear Generating Plant Cow Milk Pathway Child Age Group

Nuclide	T. Body	GI Tract	Bone	Liver	Kidney	Thyroid	Lung	Skin
H-3	1.58E 03	1.58E 03	0.00E 00	1.58E 03	1.58E 03	1.58E 03	1.58E 03	1.58E 03
Cr-51	4.71E 04	2.50E 06	0.00E 00	0.00E 00	7.14E 03	2.61E 04	4.77E 04	0.00E 00
Mn-54	2.87E 06	9.04E 06	0.00E 00	1.08E 07	3.02E 06	0.00E 00	0.00E 00	0.00E 00
Fe-59	4.52E 07	9.45E 07	5.61E 07	9.08E 07	0.00E 00	0.00E 00	2.63E 07	0.00E 00
Co-58	1.77E 07	3.37E 07	0.00E 00	5.77E 06	0.00E 00	0.00E 00	0.00E 00	0.00E 00
Co-60	6.81E 07	1.28E 08	0.00E 00	2.31E 07	0.00E 00	0.00E 00	0.00E 00	0.00E 00
Zn-65	4.10E 09	1.16E 09	2.47E 09	6.59E 09	4.15E 09	0.00E 00	0.00E 00	0.00E 00
Sr-89	8.93E 07	1.21E 08	3.13E 09	0.00E 00	0.00E 00	0.00E 00	0.00E 00	0.00E 00
Sr-90	1.63E 10	8.68E 08	6.44E 10	0.00E 00	0.00E 00	0.00E 00	0.00E 00	0.00E 00
Zr-95	3.56E 02	4.17E 05	1.82E 03	4.00E 02	5.72E 02	0.00E 00	0.00E 00	0.00E 00
I-131	3.66E 08	5.73E 07	6.40E 08	6.44E 08	1.06E 09	2.13E 11	0.00E 00	0.00E 00
I-133	4.11E 06	4.38E 06	8.78E 06	1.09E 07	1.81E 07	2.02E 09	0.00E 00	0.00E 00
I-135	2.11E 04	3.40E 04	2.48E 04	4.46E 04	6.85E 04	3.95E 06	0.00E 00	0.00E 00
Cs-134	4.09E 09	1.05E 08	1.18E 10	1.94E 10	6.01E 09	0.00E 00	2.16E 09	0.00E 00
Cs-136	8.53E 08	4.63E 07	4.80E 08	1.32E 09	7.02E 08	0.00E 00	1.05E 08	0.00E 00
Cs-137	2.52E 09	1.07E 08	1.79E 10	1.71E 10	5.57E 09	0.00E 00	2.00E 09	0.00E 00
Ba-140	3.27E 06	2.84E 07	5.60E 07	4.91E 04	1.60E 04	0.00E 00	2.93E 04	0.00E 00
Ce-141	7.47E 02	6.28E 06	1.01E 04	5.03E 03	2.21E 03	0.00E 00	0.00E 00	0.00E 00
Ce-144	4.36E 04	6.68E 07	8.17E 05	2.56E 05	1.42E 05	0.00E 00	0.00E 00	0.00E 00
Nb-95	3.87E 04	1.00E 08	1.39E 05	5.41E 04	5.09E 04	0.00E 00	0.00E 00	0.00E 00
Ru-103	7.26E 02	4.88E 04	1.89E 03	0.00E 00	4.75E 03	0.00E 00	0.00E 00	0.00E 00

* R_i values are in units of mRem/yr per $\mu Ci/m^3$ for inhalation and tritium, and in units of m^2 mRem/yr per μCi/Sec for all others.

Table 17 R_i Values for the Monticello Nuclear Generating Plant Cow Milk Pathway Infant Age Group

Nuclide	T. Body	GI Tract	Bone	Liver	Kidney	Thyroid	Lung	Skin
H-3	2.40E 03	2.40E 03	0.00E 00	2.40E 03	2.40E 03	2.40E 03	2.40E 03	2.40E 03
Cr-51	7.46E 04	2.17E 06	0.00E 00	0.00E 00	1.06E 04	4.87E 04	9.47E 04	0.00E 00
Mn-54	4.54E 06	7.36E 06	0.00E 00	2.00E 07	4.44E 06	0.00E 00	0.00E 00	0.00E 00
Fe-59	7.21E 07	8.74E 07	1.05E 08	1.83E 08	0.00E 00	0.00E 00	5.41E 07	0.00E 00
Co-58	2.88E 07	2.88E 07	0.00E 00	1.15E 07	0.00E 00	0.00E 00	0.00E 00	0.00E 00
Co-60	1.11E 08	1.12E 08	0.00E 00	4.71E 07	0.00E 00	0.00E 00	0.00E 00	0.00E 00
Zn-65	5.26E 09	9.63E 09	3.32E 09	1.14E 10	5.53E 09	0.00E 00	0.00E 00	0.00E 00
Sr-89	1.70E 08	1.22E 08	5.94E 09	0.00E 00	0.00E 00	0.00E 00	0.00E 00	0.00E 00
Sr-90	1.79E 10	8.75E 08	7.01E 10	0.00E 00	0.00E 00	0.00E 00	0.00E 00	0.00E 00
Zr-95	5.58E 02	3.92E 05	3.23E 03	7.87E 02	8.48E 02	0.00E 00	0.00E 00	0.00E 00
I-131	6.92E 08	5.62E 07	1.34E 09	1.57E 09	1.84E 09	5.17E 11	0.00E 00	0.00E 00
I-133	7.91E 06	4.57E 06	1.85E 07	2.70E 07	3.17E 07	4.91E 09	0.00E 00	0.00E 00
I-135	3.74E 04	3.71E 04	5.16E 04	1.03E 05	1.14E 05	9.20E 06	0.00E 00	0.00E 00
Cs-134	3.59E 09	9.65E 07	1.90E 10	3.55E 10	9.14E 09	0.00E 00	3.75E 09	0.00E 00
Cs-136	1.03E 09	4.19E 07	9.37E 08	2.76E 09	1.10E 09	0.00E 00	2.25E 08	0.00E 00
Cs-137	2.37E 09	1.04E 08	2.85E 10	3.34E 10	8.96E 09	0.00E 00	3.63E 09	0.00E 00
Ba-140	5.94E 06	2.83E 07	1.15E 08	1.15E 05	2.74E 04	0.00E 00	7.08E 04	0.00E 00
Ce-141	1.44E 03	6.30E 06	2.00E 04	1.22E 04	3.76E 03	0.00E 00	0.00E 00	0.00E 00
Ce-144	6.56E 04	6.72E 07	1.17E 06	4.79E 05	1.94E 05	0.00E 00	0.00E 00	0.00E 00
Nb-95	6.18E 09	9.02E 07	2.59E 05	1.07E 05	7.66E 04	0.00E 00	0.00E 00	0.00E 00
Ru-103	1.28E 03	4.65E 04	3.82E 03	0.00E 00	7.96E 03	0.00E 00	0.00E 00	0.00E 00

* R_i values are in units of mRem/yr per $\mu Ci/m^3$ for inhalation and tritium, and in units of m^2 mRem/yr per $\mu Ci/Sec$ for all others.

Table 18 R_i Values for the Monticello Nuclear Generating Plant Goat Milk Pathway Adult Age Group

Nuclide	T. Body	GI Tract	Bone	Liver	Kidney	Thyroid	Lung	Skin
H-3	1.57E 03	1.57E 03	0.00E 00	1.57E 03	1.57E 03	1.57E 03	1.57E 03	1.57E 03
Cr-51	1.59E 03	3.99E 05	0.00E 00	0.00E 00	3.49E 02	9.48E 02	2.11E 03	0.00E 00
Mn-54	9.89E 04	1.59E 06	0.00E 00	0.00E 00	1.59E 05	9.48E 02	0.00E 00	0.00E 00
Fe-59	1.62E 05	1.41E 06	1.80E 05	4.23E 05	0.00E 00	0.00E 00	1.18E 05	0.00E 00
Co-58	6.03E 05	5.46E 06	0.00E 00	2.69E 05	0.00E 00	0.00E 00	0.00E 00	0.00E 00
Co-60	2.32E 06	1.98E 07	0.00E 00	1.05E 06	0.00E 00	0.00E 00	0.00E 00	0.00E 00
Zn-65	1.42E 08	1.97E 08	9.85E 07	3.14E 08	2.10E 08	0.00E 00	0.00E 00	0.00E 00
Sr-89	4.13E 07	2.31E 08	1.44E 09	0.00E 00	0.00E 00	0.00E 00	0.00E 00	0.00E 00
Sr-90	1.39E 10	1.64E 09	5.67E 10	0.00E 00	0.00E 00	0.00E 00	0.00E 00	0.00E 00
Zr-95	1.17E 01	5.46E 04	5.37E 01	1.72E 01	2.70E 01	0.00E 00	0.00E 00	0.00E 00
I-131	1.43E 08	6.59E 07	1.74E 08	2.50E 08	4.28E 08	8.18E 10	0.00E 00	0.00E 00
I-133	1.26E 06	3.71E 06	2.37E 06	4.13E 06	7.21E 06	6.07E 08	0.00E 00	0.00E 00
I-135	6.83E 03	2.09E 04	7.08E 03	1.85E 04	2.97E 04	1.22E 06	0.00E 00	0.00E 00
Cs-134	1.72E 10	3.69E 08	8.85E 09	2.11E 10	6.82E 09	0.00E 00	2.26E 09	0.00E 00
Cs-136	1.06E 09	1.68E 08	3.75E 08	1.48E 09	8.25E 08	0.00E 00	1.13E 08	0.00E 00
Cs-137	1.10E 10	3.25E 08	1.23E 10	1.68E 10	5.70E 09	0.00E 00	1.89E 09	0.00E 00
Ba-140	1.01E 05	3.18E 06	1.54E 06	1.94E 03	6.59E 02	0.00E 00	1.11E 03	0.00E 00
Ce-141	2.06E 01	6.94E 05	2.68E 02	1.81E 02	8.43E 01	0.00E 00	0.00E 00	0.00E 00
Ce-144	0.00E 00	0.00E 00	0.00E 00	0.00E 00	0.00E 00	0.00E 00	0.00E 00	0.00E 00
Nb-95	0.00E 00	0.00E 00	0.00E 00	0.00E 00	0.00E 00	0.00E 00	0.00E 00	0.00E 00
Ru-103	0.00E 00	0.00E 00	0.00E 00	0.00E 00	0.00E 00	0.00E 00	0.00E 00	0.00E 00

* R_i values are in units of mRem/yr per $\mu Ci/m^3$ for inhalation and tritium, and in units of m^2 mRem/yr per $\mu Ci/Sec$ for all others.

Table 19 R_i Values for the Monticello Nuclear Generating Plant Goat Milk Pathway Teen Age Group

Nuclide	T. Body	GI Tract	Bone	Liver	Kidney	Thyroid	Lung	Skin
H-3	2.04E 03	2.04E 03	0.00E 00	2.04E 03	2.04E 03	2.04E 03	2.04E 03	2.04E 03
Cr-51	2.77E 03	4.66E 05	0.00E 00	0.00E 00	6.07E 02	1.54E 02	3.95E 03	0.00E 00
Mn-54	1.71E 05	1.77E 06	0.00E 00	8.64E 05	2.58E 05	0.00E 00	0.00E 00	0.00E 00
Fe-59	2.83E 05	1.74E 06	3.14E 05	7.34E 05	0.00E 00	0.00E 00	2.31E 05	0.00E 00
Co-58	1.04E 06	6.25E 06	0.00E 00	4.53E 05	0.00E 00	0.00E 00	0.00E 00	0.00E 00
Co-60	4.02E 06	2.32E 07	0.00E 00	1.78E 06	0.00E 00	0.00E 00	0.00E 00	0.00E 00
Zn-65	2.45E 08	2.22E 08	1.51E 08	5.25E 08	3.36E 08	0.00E 00	0.00E 00	0.00E 00
Sr-89	7.59E 07	3.16E 08	2.65E 09	0.00E 00	0.00E 00	0.00E 00	0.00E 00	0.00E 00
Sr-90	1.98E 10	2.25E 09	8.01E 10	0.00E 00	0.00E 00	0.00E 00	0.00E 00	0.00E 00
Zr-95	2.04E 01	6.84E 04	9.40E 01	2.97E 01	4.36E 01	0.00E 00	0.00E 00	0.00E 00
I-131	2.38E 08	8.77E 07	3.17E 08	4.43E 08	7.63E 08	1.29E 11	0.00E 00	0.00E 00
I-133	2.24E 06	5.57E 06	4.34E 06	7.36E 06	1.29E 07	1.03E 09	0.00E 00	0.00E 00
I-135	1.20E 04	3.59E 04	1.26E 04	3.24E 04	5.11E 04	2.08E 06	0.00E 00	0.00E 00
Cs-134	1.68E 10	4.50E 08	1.54E 10	3.62E 10	1.15E 10	0.00E 00	4.39E 09	0.00E 00
Cs-136	1.69E 09	2.02E 08	6.38E 08	2.51E 09	1.37E 09	0.00E 00	2.15E 08	0.00E 00
Cs-137	1.03E 10	4.21E 08	2.22E 10	2.96E 10	1.01E 01	0.00E 00	3.91E 09	0.00E 00
Ba-140	1.80E 05	4.30E 06	2.79E 06	3.41E 03	1.16E 03	0.00E 00	2.30E 03	0.00E 00
Ce-141	3.77E 01	9.39E 05	4.92E 02	3.28E 02	1.55E 02	0.00E 00	0.00E 00	0.00E 00
Ce-144	0.00E 00	0.00E 00	0.00E 00	0.00E 00	0.00E 00	0.00E 00	0.00E 00	0.00E 00
Nb-95	0.00E 00	0.00E 00	0.00E 00	0.00E 00	0.00E 00	0.00E 00	0.00E 00	0.00E 00
Ru-103	0.00E 00	0.00E 00	0.00E 00	0.00E 00	0.00E 00	0.00E 00	0.00E 00	0.00E 00

* R_i values are in units of mRem/yr per $\mu Ci/m^3$ for inhalation and tritium, and in units of m^2 mRem/yr per $\mu Ci/Sec$ for all others.

Table 20 R_i Values for the Monticello Nuclear Generating Plant Goat Milk Pathway Child Age Group

Nuclide	T. Body	GI Tract	Bone	Liver	Kidney	Thyroid	Lung	Skin
H-3	3.23E 03	3.23E 03	0.00E 00	3.23E 03	3.23E 03	3.23E 03	3.23E 03	3.23E 03
Cr-51	5.65E 03	3.00E 05	0.00E 00	0.00E 00	8.57E 02	3.14E 03	5.73E 03	0.00E 00
Mn-54	3.44E 05	1.08E 06	0.00E 00	1.29E 06	3.62E 05	0.00E 00	0.00E 00	0.00E 00
Fe-59	5.88E 05	1.23E 06	7.29E 05	1.18E 05	0.00E 00	0.00E 00	3.42E 05	0.00E 00
Co-58	2.12E 06	4.04E 06	0.00E 00	6.92E 05	0.00E 00	0.00E 00	0.00E 00	0.00E 00
Co-60	8.17E 06	1.53E 07	0.00E 00	2.77E 06	0.00E 00	0.00E 00	0.00E 00	0.00E 00
Zn-65	4.92E 08	1.39E 08	2.97E 08	7.19E 08	4.98E 08	0.00E 00	0.00E 00	0.00E 00
Sr-89	1.87E 08	2.54E 08	6.56E 09	0.00E 00	0.00E 00	0.00E 00	0.00E 00	0.00E 00
Sr-90	3.43E 10	1.82E 09	1.35E 11	0.00E 00	0.00E 00	0.00E 00	0.00E 00	0.00E 00
Zr-95	4.27E 01	5.01E 04	2.18E 02	4.80E 01	6.87E 01	0.00E 00	0.00E 00	0.00E 00
I-131	4.39E 08	6.88E 07	7.68E 08	7.72E 08	1.27E 09	2.55E 11	0.00E 00	0.00E 00
I-133	4.93E 06	5.25E 06	1.05E 07	1.30E 07	2.17E 07	2.42E 09	0.00E 00	0.00E 00
I-135	2.53E 04	4.08E 04	2.98E 04	5.36E 04	8.22E 04	4.74E 06	0.00E 00	0.00E 00
Cs-134	1.23E 10	3.14E 08	3.55E 10	5.82E 10	1.80E 10	0.00E 00	6.47E 09	0.00E 00
Cs-136	2.56E 09	1.39E 08	1.44E 09	3.96E 09	2.11E 09	0.00E 00	3.14E 08	0.00E 00
Cs-137	7.57E 09	3.21E 08	5.36E 10	5.13E 10	1.67E 10	0.00E 00	6.01E 09	0.00E 00
Ba-140	3.92E 05	3.41E 06	6.72E 06	5.89E 03	1.92E 03	0.00E 00	3.51E 03	0.00E 00
Ce-141	8.97E 01	7.45E 05	1.21E 03	6.04E 02	2.65E 02	0.00E 00	0.00E 00	0.00E 00
Ce-144	0.00E 00	0.00E 00	0.00E 00	0.00E 00	0.00E 00	0.00E 00	0.00E 00	0.00E 00
Nb-95	0.00E 00	0.00E 00	0.00E 00	0.00E 00	0.00E 00	0.00E 00	0.00E 00	0.00E 00
Ru-103	0.00E 00	0.00E 00	0.00E 00	0.00E 00	0.00E 00	0.00E 00	0.00E 00	0.00E 00

* R_i values are in units of mRem/yr per $\mu Ci/m^3$ for inhalation and tritium, and in units of m^2 mRem/yr per $\mu Ci/Sec$ for all others.

Table 21 R_i Values for the Monticello Nuclear Generating Plant Goat Milk Pathway Infant Age Group

Nuclide	T. Body	GI Tract	Bone	Liver	Kidney	Thyroid	Lung	Skin
H-3	4.90E 03	4.90E 03	0.00E 00	4.90E 03	4.90E 03	4.90E 03	4.90E 03	4.90E 03
Cr-51	8.95E 03	2.61E 05	0.00E 00	0.00E 00	1.28E 03	5.84E 03	1.14E 04	0.00E 00
Mn-54	5.45E 05	8.83E 06	0.00E 00	2.40E 06	5.33E 05	0.00E 00	0.00E 00	0.00E 00
Fe-59	9.37E 05	1.14E 06	1.36E 06	2.38E 06	0.00E 00	0.00E 00	7.03E 05	0.00E 00
Co-58	3.45E 06	3.45E 06	0.00E 00	1.38E 06	0.00E 00	0.00E 00	0.00E 00	0.00E 00
Co-60	1.34E 07	1.35E 07	0.00E 00	5.65E 06	0.00E 00	0.00E 00	0.00E 00	0.00E 00
Zn-65	6.31E 08	1.16E 09	3.99E 08	1.37E 09	6.63E 08	0.00E 00	0.00E 00	0.00E 00
Sr-89	3.58E 08	2.57E 08	1.25E 10	0.00E 00	0.00E 00	0.00E 00	0.00E 00	0.00E 00
Sr-90	3.75E 10	1.84E 09	1.47E 11	0.00E 00	0.00E 00	0.00E 00	0.00E 00	0.00E 00
Zr-95	6.70E 01	4.70E 04	3.88E 02	9.45E 01	1.02E 02	0.00E 00	0.00E 00	0.00E 00
I-131	8.31E 08	6.74E 07	1.60E 09	1.89E 09	2.21E 09	6.21E 11	0.00E 00	0.00E 00
I-133	9.49E 06	5.48E 06	2.23E 07	3.24E 07	3.81E 07	5.89E 09	0.00E 00	0.00E 00
I-135	4.49E 04	4.46E 04	6.19E 04	1.23E 05	1.37E 05	1.10E 07	0.00E 00	0.00E 00
Cs-134	1.08E 10	2.89E 08	5.71E 10	1.07E 11	2.74E 10	0.00E 00	1.12E 10	0.00E 00
Cs-136	3.09E 09	1.26E 08	2.81E 09	8.27E 09	3.30E 09	0.00E 00	6.74E 08	0.00E 00
Cs-137	7.10E 09	3.13E 08	8.55E 10	1.00E 11	2.69E 10	0.00E 00	1.09E 10	0.00E 00
Ba-140	7.13E 05	3.40E 06	1.38E 04	1.38E 07	3.29E 03	0.00E 00	8.50E 03	0.00E 00
Ce-141	1.72E 02	7.57E 05	2.40E 03	1.46E 03	4.52E 02	0.00E 00	0.00E 00	0.00E 00
Ce-144	0.00E 00	0.00E 00	0.00E 00	0.00E 00	0.00E 00	0.00E 00	0.00E 00	0.00E 00
Nb-95	0.00E 00	0.00E 00	0.00E 00	0.00E 00	0.00E 00	0.00E 00	0.00E 00	0.00E 00
Ru-103	0.00E 00	0.00E 00	0.00E 00	0.00E 00	0.00E 00	0.00E 00	0.00E 00	0.00E 00

* R_i values are in units of mRem/yr per $\mu Ci/m^3$ for inhalation and tritium, and in units of m^2 mRem/yr per $\mu Ci/Sec$ for all others.

Table 22 R_i Values for the Monticello Nuclear Generating Plant Inhalation Pathway Adult Age Group

Nuclide	T. Body	GI Tract	Bone	Liver	Kidney	Thyroid	Lung	Skin
H-3	1.26E 03	1.26E 03	0.00E 00	1.26E 03	1.26E 03	1.26E 03	1.26E 03	1.26E 03
Cr-51	9.99E 01	3.32E 03	0.00E 00	0.00E 00	2.28E 01	5.94E 01	1.44E 04	0.00E 00
Mn-54	6.29E 03	7.72E 04	0.00E 00	3.95E 04	9.83E 03	0.00E 00	4.10E 06	0.00E 00
Fe-59	1.05E 04	1.88E 05	1.17E 04	2.77E 04	0.00E 00	0.00E 00	1.01E 06	0.00E 00
Co-58	2.07E 03	1.06E 05	0.00E 00	1.58E 03	0.00E 00	0.00E 00	9.27E 05	0.00E 00
Co-60	1.48E 04	2.84E 05	0.00E 00	1.15E 04	0.00E 00	0.00E 00	5.96E 06	0.00E 00
Zn-65	4.65E 04	5.34E 04	3.24E 04	1.03E 05	6.89E 04	0.00E 00	8.63E 05	0.00E 00
Sr-89	8.71E 03	3.49E 05	3.04E 05	0.00E 00	0.00E 00	0.00E 00	1.40E 06	0.00E 00
Sr-90	6.09E 06	7.21E 05	9.91E 07	0.00E 00	0.00E 00	0.00E 00	9.59E 06	0.00E 00
Zr-95	2.32E 04	1.50E 05	1.07E 05	3.44E 04	5.41E 04	0.00E 00	1.77E 06	0.00E 00
I-131	2.05E 04	6.27E 03	2.52E 04	3.57E 04	6.12E 04	1.19E 07	0.00E 00	0.00E 00
I-133	4.51E 03	8.87E 03	8.63E 03	1.48E 04	2.58E 04	2.15E 06	0.00E 00	0.00E 00
I-135	2.57E 03	5.25E 03	2.68E 03	6.98E 03	1.11E 04	4.48E 05	0.00E 00	0.00E 00
Cs-134	7.27E 05	1.04E 04	3.72E 05	8.47E 05	2.87E 05	0.00E 00	9.75E 04	0.00E 00
Cs-136	1.10E 05	1.17E 04	3.90E 04	1.46E 05	8.55E 04	0.00E 00	1.20E 04	0.00E 00
Cs-137	4.27E 05	8.39E 03	4.78E 05	6.20E 05	2.22E 05	0.00E 00	7.51E 04	0.00E 00
Ba-140	2.56E 03	2.18E 05	3.90E 04	4.90E 01	1.67E 01	0.00E 00	1.27E 06	0.00E 00
Ce-141	1.53E 03	1.20E 05	1.99E 04	1.35E 04	6.25E 03	0.00E 00	3.61E 05	0.00E 00
Ce-144	1.84E 05	8.16E 05	3.43E 06	1.43E 06	8.48E 05	0.00E 00	7.78E 06	0.00E 00
Nb-95	4.21E 03	1.04E 05	1.41E 03	7.82E 03	7.72E 03	0.00E 00	5.05E 05	0.00E 00
Ru-103	6.58E 02	1.10E 05	1.53E 03	0.00E 00	5.83E 03	0.00E 00	5.05E 05	0.00E 00

* R_i values are in units of mRem/yr per $\mu Ci/m^3$ for inhalation and tritium, and in units of m^2 mRem/yr per $\mu Ci/Sec$ for all others.

Table 23 R_i Values for the Monticello Nuclear Generating Plant Inhalation Pathway Teen Age Group

Nuclide	T. Body	GI Tract	Bone	Liver	Kidney	Thyroid	Lung	Skin
H-3	1.27E 03	1.27E 03	0.00E 00	1.27E 03	1.27E 03	1.27E 03	1.27E 03	1.27E 03
Cr-51	1.35E 02	3.00E 03	0.00E 00	0.00E 00	3.07E 01	7.49E 01	2.09E 04	0.00E 00
Mn-54	8.39E 03	6.67E 04	0.00E 00	5.10E 04	1.27E 04	0.00E 00	1.98E 06	0.00E 00
Fe-59	1.43E 04	1.78E 05	1.59E 04	3.69E 04	0.00E 00	0.00E 00	1.53E 06	0.00E 00
Co-58	2.77E 03	9.51E 04	0.00E 00	2.07E 03	0.00E 00	0.00E 00	1.34E 06	0.00E 00
Co-60	1.98E 04	2.59E 05	0.00E 00	1.51E 04	0.00E 00	0.00E 00	8.71E 06	0.00E 00
Zn-65	6.23E 04	4.66E 04	3.85E 04	1.33E 05	8.63E 04	0.00E 00	1.24E 06	0.00E 00
Sr-89	1.25E 04	3.71E 05	4.34E 05	0.00E 00	0.00E 00	0.00E 00	2.41E 06	0.00E 00
Sr-90	6.67E 06	7.64E 05	1.08E 08	0.00E 00	0.00E 00	0.00E 00	1.65E 07	0.00E 00
Zr-95	3.15E 04	1.49E 05	1.45E 05	4.58E 04	6.73E 04	0.00E 00	2.68E 06	0.00E 00
I-131	2.64E 04	6.48E 03	3.54E 04	4.90E 04	8.39E 04	1.46E 07	0.00E 00	0.00E 00
I-133	6.21E 03	1.03E 04	1.21E 04	2.05E 04	3.59E 04	2.92E 06	0.00E 00	0.00E 00
I-135	3.49E 03	6.95E 03	3.70E 03	9.44E 03	1.49E 04	6.21E 05	0.00E 00	0.00E 00
Cs-134	5.48E 05	9.75E 03	5.02E 05	1.13E 05	3.75E 05	0.00E 00	1.46E 05	0.00E 00
Cs-136	1.37E 05	1.09E 04	5.14E 04	1.93E 05	1.10E 05	0.00E 00	1.77E 04	0.00E 00
Cs-137	3.11E 05	8.47E 03	6.69E 05	8.47E 05	3.04E 05	0.00E 00	1.21E 05	0.00E 00
Ba-140	3.51E 03	2.28E 05	5.46E 04	6.69E 01	2.28E 01	0.00E 00	2.03E 06	0.00E 00
Ce-141	2.16E 03	1.26E 05	2.84E 04	1.89E 04	8.87E 03	0.00E 00	6.13E 05	0.00E 00
Ce-144	2.62E 05	8.64E 05	4.89E 06	2.02E 06	1.21E 06	0.00E 00	1.34E 07	0.00E 00
Nb-95	5.66E 03	9.68E 04	1.86E 04	1.03E 04	1.00E 04	0.00E 00	7.51E 05	0.00E 00
Ru-103	8.96E 02	1.09E 05	2.10E 03	0.00E 00	7.43E 03	0.00E 00	7.83E 05	0.00E 00

* R_i values are in units of mRem/yr per µCi/m^3 for inhalation and tritium, and in units of m^2 mRem/yr per µCi/Sec for all others.

Table 24 R_i Values for the Monticello Nuclear Generating Plant Inhalation Pathway Child Age Group

Nuclide	T. Body	GI Tract	Bone	Liver	Kidney	Thyroid	Lung	Skin
H-3	1.21E 03	1.12E 03	0.00E 00	1.12E 03	1.12E 03	1.12E 03	1.12E 03	1.12E 03
Cr-51	1.54E 02	1.08E 03	0.00E 00	0.00E 00	2.43E 01	8.53E 01	1.70E 04	0.00E 00
Mn-54	9.50E 03	2.29E 04	0.00E 00	4.29E 04	1.00E 04	0.00E 00	1.57E 06	0.00E 00
Fe-59	1.67E 04	7.06E 04	2.07E 04	3.34E 04	0.00E 00	0.00E 00	1.27E 06	0.00E 00
Co-58	3.16E 03	3.43E 04	0.00E 00	1.77E 03	0.00E 00	0.00E 00	1.10E 06	0.00E 00
Co-60	2.26E 04	9.61E 04	0.00E 00	1.31E 04	0.00E 00	0.00E 00	7.06E 06	0.00E 00
Zn-65	7.02E 04	1.63E 04	4.25E 04	1.13E 05	7.13E 04	0.00E 00	9.94E 05	0.00E 00
Sr-89	1.72E 04	1.67E 05	5.99E 05	0.00E 00	0.00E 00	0.00E 00	2.15E 06	0.00E 00
Sr-90	6.43E 06	3.43E 05	1.01E 08	0.00E 00	0.00E 00	0.00E 00	1.47E 07	0.00E 00
Zr-95	3.69E 04	6.10E 04	1.90E 05	4.17E 04	5.95E 04	0.00E 00	2.23E 06	0.00E 00
I-131	2.72E 04	2.84E 03	4.80E 04	4.80E 04	7.87E 04	1.62E 07	0.00E 00	0.00E 00
I-133	7.68E 03	5.47E 03	1.66E 04	2.03E 04	3.37E 04	3.84E 06	0.00E 00	0.00E 00
I-135	4.14E 03	4.44E 03	4.92E 03	8.73E 03	1.34E 04	7.92E 05	0.00E 00	0.00E 00
Cs-134	2.24E 05	3.84E 03	6.50E 05	1.01E 05	3.30E 05	0.00E 00	1.21E 05	0.00E 00
Cs-136	1.16E 05	4.17E 03	6.50E 04	1.71E 05	9.53E 04	0.00E 00	1.45E 04	0.00E 00
Cs-137	1.28E 05	3.61E 03	9.05E 05	8.24E 05	2.82E 05	0.00E 00	1.04E 05	0.00E 00
Ba-140	4.32E 03	1.02E 05	7.39E 04	6.47E 01	2.11E 01	0.00E 00	1.74E 06	0.00E 00
Ce-141	2.89E 03	5.65E 04	3.92E 04	1.95E 04	8.53E 03	0.00E 00	5.43E 05	0.00E 00
Ce-144	3.61E 05	3.88E 05	6.77E 06	2.12E 06	1.17E 06	0.00E 00	1.19E 07	0.00E 00
Nb-95	6.55E 03	3.70E 04	2.35E 04	9.18E 03	8.62E 03	0.00E 00	6.14E 05	0.00E 00
Ru-103	1.07E 03	4.48E 04	2.79E 03	0.00E 00	7.03E 03	0.00E 00	6.62E 05	0.00E 00

* R_i values are in units of mRem/yr per µCi/m^3 for inhalation and tritium, and in units of m^2 mRem/yr per µCi/Sec for all others.

Table 25 R_i Values for the Monticello Nuclear Generating Plant Inhalation Pathway Infant Age Group

Nuclide	T. Body	GI Tract	Bone	Liver	Kidney	Thyroid	Lung	Skin
H-3	6.46E 02	6.46E 02	0.00E 00	6.46E 02	6.46E 02	6.46E 02	6.46E 02	6.46E 02
Cr-51	8.93E 01	3.56E 02	0.00E 00	0.00E 00	1.32E 01	5.75E 01	1.28E 04	0.00E 00
Mn-54	4.98E 03	7.05E 03	0.00E 00	2.53E 04	4.98E 03	0.00E 00	9.98E 05	0.00E 00
Fe-59	9.46E 03	2.47E 04	1.35E 04	2.35E 04	0.00E 00	0.00E 00	1.01E 06	0.00E 00
Co-58	1.82E 03	1.11E 04	0.00E 00	1.22E 03	0.00E 00	0.00E 00	7.76E 05	0.00E 00
Co-60	1.18E 04	3.19E 04	0.00E 00	8.01E 03	0.00E 00	0.00E 00	4.50E 06	0.00E 00
Zn-65	3.10E 04	5.13E 04	1.93E 04	6.25E 04	3.24E 04	0.00E 00	6.46E 05	0.00E 00
Sr-89	1.14E 04	6.39E 05	3.97E 05	0.00E 00	0.00E 00	0.00E 00	2.03E 06	0.00E 00
Sr-90	2.59E 06	1.31E 05	4.08E 07	0.00E 00	0.00E 00	0.00E 00	1.12E 07	0.00E 00
Zr-95	2.03E 04	2.17E 04	1.15E 05	2.78E 04	3.10E 00	0.00E 00	1.75E 06	0.00E 00
I-131	1.96E 04	1.06E 03	3.79E 04	4.43E 04	5.17E 04	1.48E 07	0.00E 00	0.00E 00
I-133	5.59E 03	2.15E 03	1.32E 04	1.92E 04	2.24E 04	3.55E 06	0.00E 00	0.00E 00
I-135	2.27E 03	1.83E 03	3.86E 03	7.60E 03	8.47E 03	6.96E 05	0.00E 00	0.00E 00
Cs-134	7.44E 04	1.33E 03	3.96E 05	7.02E 05	1.90E 05	0.00E 00	7.95E 04	0.00E 00
Cs-136	5.28E 04	1.43E 03	4.82E 04	1.34E 05	5.63E 04	0.00E 00	1.17E 04	0.00E 00
Cs-137	4.54E 04	1.33E 03	5.48E 05	6.11E 05	1.72E 05	0.00E 00	7.12E 04	0.00E 00
Ba-140	2.89E 03	3.83E 04	5.59E 04	5.59E 01	1.34E 01	0.00E 00	1.59E 06	0.00E 00
Ce-141	1.99E 03	2.15E 04	2.77E 04	1.66E 04	5.24E 03	0.00E 00	5.16E 05	0.00E 00
Ce-144	1.76E 05	1.48E 05	3.19E 06	1.21E 06	5.38E 06	0.00E 00	9.84E 06	0.00E 00
Nb-95	3.78E 03	1.27E 04	1.57E 04	4.79E 05	4.72E 03	0.00E 00	4.79E 05	0.00E 00
Ru-103	6.79E 02	1.61E 04	2.02E 03	0.00E 00	4.24E 03	0.00E 00	5.52E 05	0.00E 00

* R_i values are in units of mRem/yr per $\mu Ci/m^3$ for inhalation and tritium, and in units of m^2 mRem/yr per $\mu Ci/Sec$ for all others.

Table 26 Table of Radioisotope Constants Used by EBARR

i	Isotope	Fission Yield	Decay Constant
1	Xe-133	0.0669	0.00000152
2	Xe-135	0.0630	0.0000210
3	Kr-85m	0.0130	0.0000438
3	Kr-88	0.0356	0.00000690
4	Kr-87	0.0253	0.000152
5	Xe-138	0.0590	0.000814
6	Kr-90	0.0500	0.0210
7	Xe-139	0.0540	0.0169
8	Kr-89	0.0459	0.00361
10	Xe-137	0.0600	0.00296
11	Xe-135m	0.00720	0.000722
12	Kr-83m	0.00520	0.000103
13	Xe-133m	0.00160	0.00000348
14	Xe-131m	0.000170	0.000000668
15	Kr-85	0.00271	0.00000000204

OFFSITE DOSE CALCULATION MANUAL - TABLE OF CONTENTS

SECTION		PAGE
1.0	RECORD OF REVISION	2
2.0	DOSE FROM ALL URANIUM FUEL CYCLE SOURCES	3
2.1	Dose Commitment	3
2.2	Bases	5

Prepared By:	
Reviewed By:	
OC Final Review Meeting:	Date:
Approved By Plant Manager:	Date:

FOR ADMINISTRATIVE USE ONLY			
3087 (DOCUMENT CHANGE, HOLD, AND COMMENT FORM) incorporated:_____			
Resp Supv: CHEM	Assoc Ref: CHEM-I	SR: N	Freq: 2 yrs
ARMS: ODCM-06.01	Doc Type: 7030	Admin Initials:	Date:

l/plr

1.0 RECORD OF REVISION

Revision No.	Date	Reason for Revision
1	October - 2000	Moved previous ODCM-04.01 (INFORMATION RELATED TO 40CFR190 and 40CFR141) into this document, changed the title to "DOSE FROM ALL URANIUM FUEL CYCLE SOURCES" and incorporated Tech Specs section 3.8.D and 4.8.D into document.
2	June - 2005	Incorporated changes made during the conversion of the Current Technical Specifications to the Improved Technical Specifications. This includes dual step annotation.

GENERAL NOTE: This procedure includes Improved Technical Specifications ([ITS]) information that is NOT applicable to Current Technical Specifications ([CTS]) and [CTS] information that will change when [ITS] is implemented. The [ITS] information *SHALL NOT* be used prior to the [ITS] effective date. On and after the [ITS] effective date, the [ITS] information *SHALL* be used in lieu of the corresponding [CTS] information.

2.0 DOSE FROM ALL URANIUM FUEL CYCLE SOURCES

2.1 Dose Commitment

2.1.1 Controls

A. **[CTS]** In accordance with T.S.6.8.D.10, the dose or dose commitment to any member of the public from all uranium fuel cycle sources is limited to less than or equal to 25 mrem to the total body or any organ, except for the thyroid, which ***SHALL*** be limited to less than or equal to 75 mrem over a period of 12 consecutive months.

[ITS] In accordance with Tech Spec 5.5.3.j., the dose or dose commitment to any member of the public from all uranium fuel cycle sources is limited to less than or equal to 25 mrem to the total body or any organ, except for the thyroid, which ***SHALL*** be limited to less than or equal to 75 mrem over a period of 12 consecutive months.

2.1.2 Applicability

At all times

2.1.3 Action

A. With the calculated dose from the release of radioactive materials in liquid or gaseous effluents exceeding twice the limits of Controls ODCM-02.01 Section 2.2.1, ODCM-03.01 Section 2.2.1 or ODCM-03.01 Section 2.3.1, prepare and submit within 30 days a special report to the Commission which includes the following:

1. Defines corrective actions and calculates the highest radiation exposure to any member of the general public from all uranium fuel cycle sources (including all effluent pathways and direct radiation).

2. Unless this report shows that exposures are less than the 40CFR Part 190 standard, either apply to the Commission for a variance to continue releases which exceed the 40CFR Part 190 standard or reduce subsequent releases to permit the standard to be met.

2.1.4 Surveillance Requirements

A. Cumulative dose contributions from all liquid and gaseous effluents ***SHALL*** be determined in accordance with surveillance requirements ODCM-02.01 Section 2.2.4, ODCM-03.01 Section 2.2.4, and ODCM-03.01 Section 2.3.4 and in accordance with the ODCM.

2.2 Bases

2.2.1 Dose From All Uranium Fuel Cycle Sources

A. Dose Commitment

Control 2.1.1.A. is provided to meet the dose limitations of 40CFR190. The specification requires the preparation and submittal of a special report whenever the calculated doses from plant radioactive effluents exceed twice the design objective doses of Appendix I. Submittal of the report is considered a timely request and a variance is granted until Staff action on the request is complete. For sites containing up to 4 reactors, it is highly unlikely that the resultant dose to a real individual will exceed 40CFR190 if the individual reactors remain with the reporting requirement level. For the purpose of the special report it may be assumed that the dose commitment to the real individual from other uranium fuel cycle source is negligible, with the exception that dose contributions from other nuclear fuel cycle facilities at the same site or within a radius of 5 miles must be considered.

OFFSITE DOSE CALCULATION MANUAL - TABLE OF CONTENTS

SECTION		PAGE
1.0	RECORD OF REVISION	2
2.0	RADIOLOGICAL ENVIRONMENTAL MONITORING PROGRAM	3
2.1	Monitoring Program	3
2.2	Land Use Census	5
2.3	Sampling	6
2.4	Interlaboratory Comparison Program	7
2.5	Bases	8
Figure 1	Radiation Environmental Monitoring Program Sampling Locations	9
Figure 2	4 - 5 Mile Ring, Control and Special Interest TLD Locations	10
Figure 3	Site Boundary TLD Locations	11
Table 1	Monticello Nuclear Generating Plant Radiological Environmental Monitoring Program Sample Collection and Analysis	12
Table 2	Reporting Levels for Radioactivity Concentrations in Environmental Samples (Reporting Levels)	17
Table 3	Maximum Values for the Lower Limits of Detection (LLD)	18
Table 4	Monticello Nuclear Generating Plant Radiological Environmental Monitoring Program Sampling Locations	20

Approval: PCR 01061011

1.0 RECORD OF REVISION

Revision No.	Date	Reason for Revision
1	October - 2000	Moved previous ODCM-05.01 (RADIATION ENVIRONMENTAL MONITORING PROGRAM) into this document, changed the title to "RADIOLOGICAL ENVIRONMENTAL MONITORING PROGRAM" and incorporated Tech Spec section 4.16 "Radiation Environmental Monitoring Program" into this document.
2	November - 2001	Deleted incorrect reference in section 2.1.3.C.
3	November - 2002	Table 4, page 22, TLD M02S from Edgar Klucas Res., 1.1, 148, SE to Krone Residence, 0.5, 223, SW.
4	April - 2003	Table 4, page 20, TLD M-10_c from Goenner Farm, 12.4, 322, NW to Campbell Farm, 10.6, 357, N.
5	October - 2003	Change in the Critical Garden location.
6	November - 2003	Updated sampling locations on Figures 1, 2 and 3.
7	September - 2004	Change in the Critical Garden location. Change 2.4.1.A. to require cross check program to be NIST traceable. NRC no longer approves cross check programs.
8	June - 2005	Incorporated changes made during the conversion of the Current Technical Specifications to the Improved Technical Specifications. This includes dual step annotation.
9	January - 2006	Updated all sample locations with GPS. Corrected inconsistencies between location on map and actual location with GPS.
10	November - 2006	Incorporated changes suggested by NRC IP 71122.01 sections 02.01.d and 02.02.e as requested in GAR 01055347. Removed references to Current Technical Specifications.

2.0 RADIOLOGICAL ENVIRONMENTAL MONITORING PROGRAM

2.1 Monitoring Program

2.1.1 Controls

A. In accordance with Tech Spec 5.5.1, the Radiological Environmental Monitoring Program (REMP) ***SHALL*** be conducted as specified in Table 1.

B. Radioanalysis ***SHALL*** be conducted meeting the requirements of Table 3.

2.1.2 Applicability

At all times.

2.1.3 Action

A. Whenever the Radiological Environmental Monitoring Program is not being conducted as specified in Table 1 the Annual Radiological Environmental Operating Report ***SHALL*** include a description of the reasons for not conducting the program as required and plans for preventing a recurrence.

B. Deviations are permitted from the required sampling schedule if samples are unobtainable due to hazardous conditions, seasonable unavailability, or to malfunctions of automatic sampling equipment. If the latter occurs, every effort ***SHALL*** be made to complete corrective action prior to the end of the next sampling period.

C. With the level of radioactivity in an environmental sampling medium exceeding the reporting levels of Table 2 when averaged over any calendar quarter, submit a special report to the Commission within 30 days from the end of the affected calendar quarter. When more than one of the radionuclides in Table 2 are detected in the sampling medium, this report ***SHALL*** be submitted if:

$$\frac{\text{concentration (1)}}{\text{limit level (1)}} + \frac{\text{concentration (2)}}{\text{limit level (2)}} + \ldots > 1.0$$

When radionuclides other than those in Table 2 are detected and are the result of plant effluents, this report ***SHALL*** be submitted if the potential annual dose to an individual is equal to or greater than the calendar year limits of ODCM-02.01 (LIQUID EFFLUENTS) Control 1.2.1.A, ODC-M-03.01 (GASEOUS EFFLUENTS) Control 1.2.1.A, or ODCM-03.01 Control 1.3.1.A. This report is not required if the measured level of radioactivity was not the result of plant effluents; however, in such an event, the condition ***SHALL*** be reported and described in the Annual Radiological Environmental Operating Report.

D. Although deviations from the sampling schedule are permitted under Paragraph B. above, whenever milk or broad leaf vegetation samples can no longer be obtained from the designated sample locations required by Table 1, the Annual Radiological Environmental Operating Report ***SHALL*** explain why the samples can no longer be obtained and identify the new locations which have been or will be added to and deleted from the monitoring program.

2.1.4 Surveillance Requirements

The radiological environmental monitoring samples ***SHALL*** be collected pursuant to Table 1 from the specific locations in Table 4 and ***SHALL*** be analyzed pursuant to the requirements of Table 1 and the detection capabilities required by Table 3.

2.2 Land Use Census

2.2.1 Controls

A Land Use Census ***SHALL*** be conducted and ***SHALL*** identify:

A. The location of the nearest milk animal, the nearest residence, and the nearest garden of greater than 500 ft^2 producing broad leaf vegetables in each of the 16 meteorological sectors within a distance of 5 miles.

B. The location of ALL milk animals and ALL 500 ft^2 or greater gardens producing broad leaf vegetables in each of the meteorological sectors within a distance of 3 miles.

2.2.2 Applicability

At all times.

2.2.3 Action

A. With a Land Use Census identifying a location which yields a calculated dose or dose commitment (via the same exposure pathway) 20 percent greater than at a location from which samples are currently being obtained in accordance with Controls 2.1.1.A., the Annual Radioactive Effluent Release Report for this period ***SHALL*** identify the new location. The new location ***SHALL*** be added to the Radiological Environmental Monitoring Program within 30 days. The sampling location, excluding the control station location, having the lowest calculated dose or dose commitment (via the same exposure pathway) may be deleted from this monitoring program after October 31 of the year in which this Land Use Census was conducted.

2.2.4 Surveillance Requirements

A. The Land Use Census ***SHALL*** be conducted at least once per year between the dates of May 1 and October 31 by door to door survey, aerial survey, or by consulting local agricultural associations.

2.3 Sampling

Table 1 and Figure 1 specify the current sampling locations for the radiological environmental monitoring program. These sampling locations are based on the latest land use census and the Site Groundwater Characterization Study.

2.3.1 Land Use Census

A. If it is learned from an annual census that milk animals or gardens are present at the location which yields a calculated thyroid dose greater than those locations previously sampled, the new milk animal or garden locations resulting in the higher calculated doses ***SHALL*** be added to the surveillance program as soon as practicable. Sample locations (except the control) having lower calculated doses may be dropped from the program at the end of the grazing or growing season (October 31) to keep the total number of sample locations constant.

B. If the plant begins routine discharges of liquid radioactive effluent into the Mississippi River, a land use survey will be conducted to determine whether any crops are irrigated with water taken from the Mississippi River between the plant discharge canal and a point 5 miles downstream. If edible crops are being irrigated from Mississippi River water, appropriate samples will be collected and analyzed per Table 1.

2.3.2 Site Groundwater Characterization Study

Review of the available groundwater piezometric data shows that shallow groundwater generally flows toward the Mississippi River, and possible upward flow gradients are present from the deep groundwater aquifer toward the shallow groundwater at the MNGP site. Therefore, any tritium releases into the subsoil environment should move towards the Mississippi River in the shallow groundwater without potentially impacting the deeper groundwater in rock. The average velocity of shallow groundwater flow is estimated at approximately 3 feet per day.

A system of five additional shallow groundwater monitoring wells was recommended to complement existing groundwater monitoring wells identified as M-33, M-34 and M-35. This monitoring system will effectively confirm the shallow groundwater flow directions during the year and will help to demonstrate that the potential impact of any releases within the plant area on groundwater inland of the plant is negligible. When the additional wells are installed, they will be added to the sampling locations listed in Table 4.

2.4 Interlaboratory Comparison Program

2.4.1 Controls

A. Analyses ***SHALL*** be performed on radioactive materials supplied as part of a NIST traceable cross-check program. This program involves the analyses of samples provided by a control laboratory and comparison of results with those of the control laboratory as well as with other laboratories which receive portions of the same samples. Media used in this program (air, milk, water, etc.) ***SHALL*** be limited to those found in the Radiological Environmental Monitoring Program.

2.4.2 Applicability

At all times.

2.4.3 Action

A. When required analyses are not performed, corrective action ***SHALL*** be reported in the Annual Radiological Environmental Operating Report.

2.4.4 Surveillance Requirements

A. The summary results of analyses performed as part of the above required program ***SHALL*** be included in the Annual Radiological Environmental Operating Report.

2.5 Bases

2.5.1 Monitoring Program

Control 2.1.1 provides measurements of radiation and radioactive materials in those exposure pathways and for those radionuclides which lead to the highest potential radiation exposures of individuals resulting from the plant operation. This program thereby supplements the radiological effluent monitoring by verifying that the measurable concentrations of radioactive materials and levels of radiation are not higher than expected on the basis of the effluent measurements and modeling of the environmental exposure pathways. After a specific program has been in effect for at least 3 years of operation, program changes may be initiated based on this experience.

The detection capabilities required by Table 1 are state-of-the art for routine environmental measurements in industrial laboratories. The LLDs for drinking water meet the requirement of 40CFR Part 141.

2.5.2 Land Use Census

Control 2.2.1 is provided to ensure that changes in the use of off-site areas are identified and that modifications to the monitoring program are made if required by the results of this census. The best survey information from door-to-door, aerial or consulting with local agricultural associations ***SHALL*** be used. This census satisfies the requirements of Section IV.B.3 of Appendix I to 10CFR Part 50. Restricting the census to gardens of greater than 500 square feet provides assurance that significant exposure pathways via broad leaf vegetables will be identified and monitored since a garden of this size is the minimum required to produce the quantity (26 kg/year) of broad leaf vegetables assumed in Regulatory Guide 1.109 for consumption by a child. To determine this minimum garden size, the following assumptions were used: 1) that 20% of the garden was used for growing broad leaf vegetables (i.e., similar to lettuce and cabbage), and 2) a vegetation yield of 2 kg/square meter.

2.5.3 Sampling

Section 2.3.1.B. is worded to conform to LAR-39 and its associated NRC Safety Evaluation (SER).

2.5.4 Interlaboratory Comparison Program

The requirement for participation in an interlaboratory comparison program is provided to ensure that independent checks on the precision and accuracy of the measurements of radioactive material in environmental sample matrices are performed as part of a quality assurance program for environmental monitoring in order to demonstrate that the results are reasonably valid.

Figure 1 Radiation Environmental Monitoring Program Sampling Locations

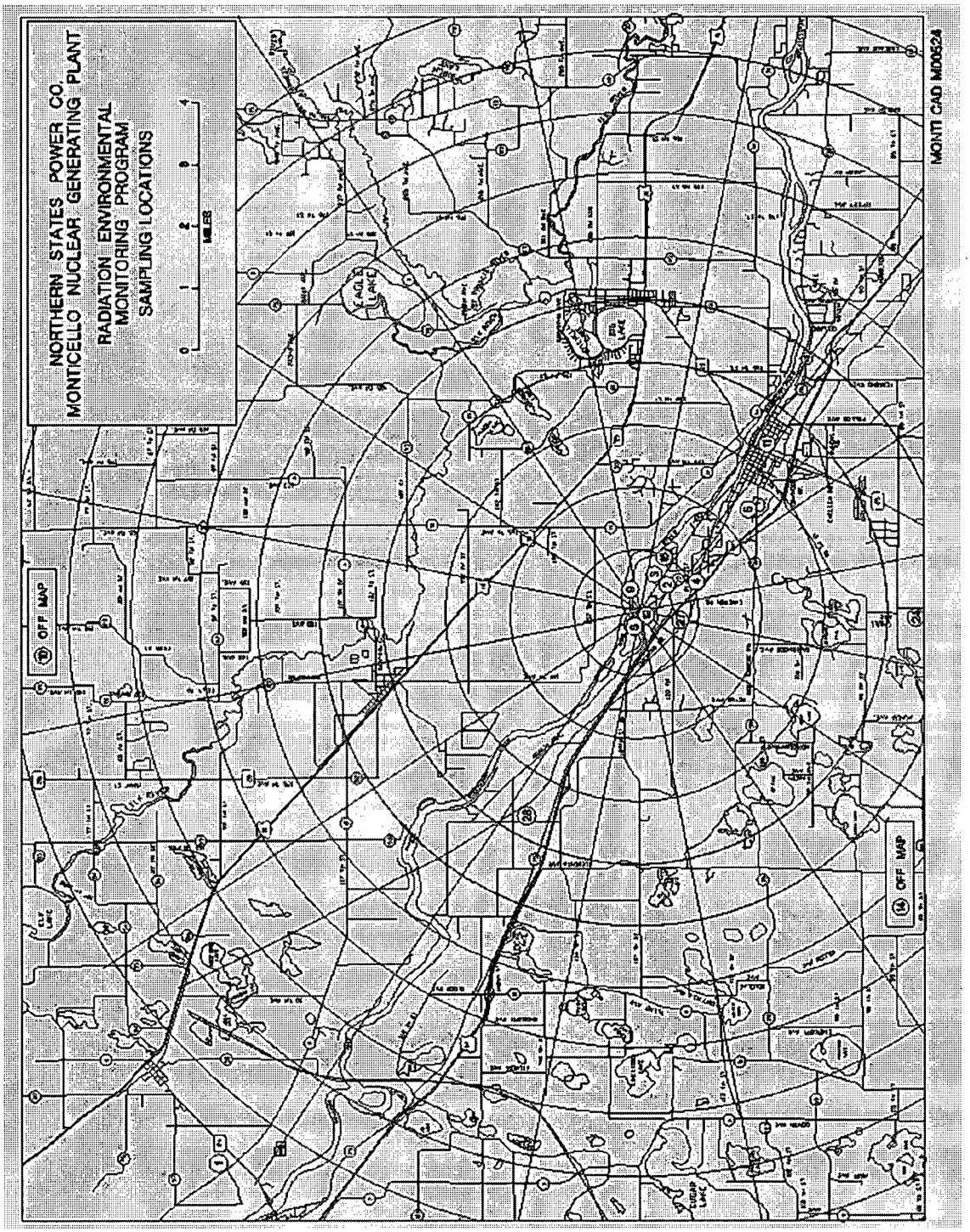

Figure 2 4 - 5 Mile Ring, Control and Special Interest TLD Locations

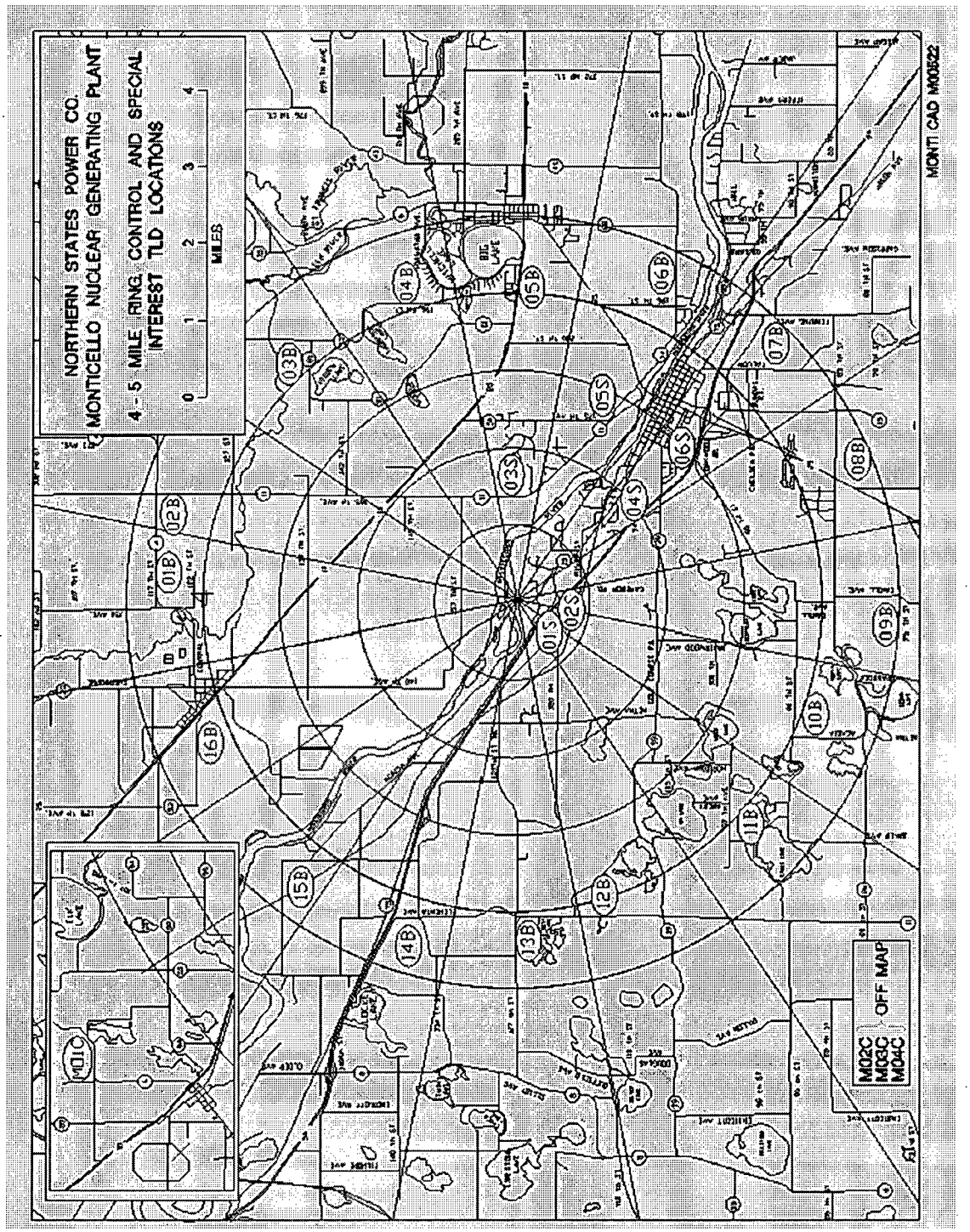

Figure 3 Site Boundary TLD Locations

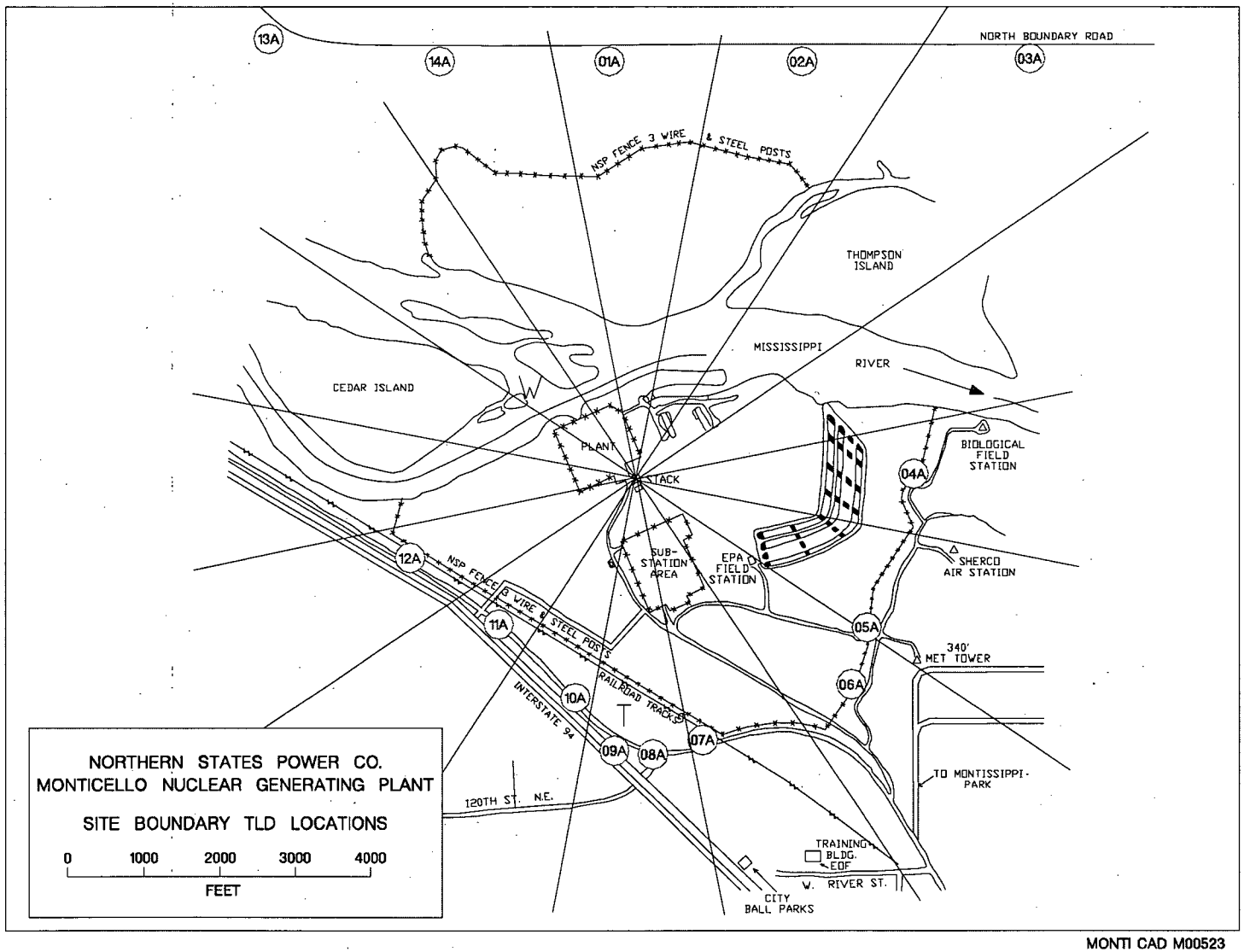

MONTI CAD M00523

Table 1 Monticello Nuclear Generating Plant Radiological Environmental Monitoring Program
Sample Collection and Analysis

Exposure Pathway and/or Sample	Number of Samples and Sample Locations**	Sampling and Collection Frequency	Type and Frequency of Analysis
1. Airborne Radioiodine & Particulates	Samples from 5 locations: 3 samples from offsite locations (in different sectors) of the highest calculated annual average ground level D/Q, 1 sample from the vicinity of a community having the highest calculated annual average ground-level D/Q, and 1 sample from a control location specified in Table 4.	Continuous Sampler operation with sample collection weekly.	Radioiodine analysis Weekly for I-131 Particulate: Gross beta activity on each filter weekly*. Analysis ***SHALL*** be performed more than 24 hours following filter change. Perform gamma isotopic analysis on composite (by location) sample quarterly.
2. Direct Radiation	40 TLD stations established with duplicate dosimeters placed at the following locations:****	Quarterly	Gamma Dose quarterly

* If gross beta activity in any indication sample exceeds 10 times the yearly average of the control sample, a gamma isotopic analysis is required.

** Sample locations are further described in Table 4.

**** Three control TLD locations have only one dosimeter.

Table 1 Monticello Nuclear Generating Plant Radiological Environmental Monitoring Program
Sample Collection and Analysis (cont'd)

Exposure Pathway and/or Sample	Number of Samples and Sample Locations**	Sampling and Collection Frequency	Type and Frequency of Analysis
2. Direct Radiation (cont'd)	1. Using the 16 meterological sectors as guidelines, an inner ring of stations in the general area of the site boundary is established and an outer ring of stations at 4 to 5 mile distance from the plant site is established. Because of inaccessibility, two sectors in the inner ring are not covered. 2. Ten dosimeters are established at special interest areas and four control stations.		
3. Waterborne a. Surface	Upstream & downstream locations.	Monthly composite of weekly samples (water & ice conditions permitting)	Gamma Isotopic analysis of each monthly composite Tritium analysis of quarterly composites of monthly composites

** Sample locations are further described in Table 4.

Table 1 Monticello Nuclear Generating Plant Radiological Environmental Monitoring Program Sample Collection and Analysis (cont'd)

Exposure Pathway and/or Sample	Number of Samples and Sample Locations**	Sampling and Collection Frequency	Type and Frequency of Analysis
3. Waterborne (cont'd)			
b. Ground	Samples from one or two sources.	Quarterly	Gamma isotopic and tritium analysis of each sample
c. Drinking	Three samples from wells within 5 miles of the plant site and one sample from a well greater than 10 miles from the plant site.	Quarterly	Gamma Isotopic and tritium analyses of each sample
	One sample from the City of Minneapolis water supply.	Monthly composite of weekly samples	I-131 Analysis and Gross beta and Gamma isotopic analysis of each monthly composite Tritium analysis of quarterly composites of monthly composites
d. Sediment from Shoreline	One sample upstream of plant, one sample downstream of plant, and one sample from shoreline of recreational area.	Semiannually	Gamma isotopic analysis of each sample

** Sample locations are further described in Table 4.

Table 1 Monticello Nuclear Generating Plant Radiological Environmental Monitoring Program
Sample Collection and Analysis (cont'd)

Exposure Pathway and/or Sample	Number of Samples and Sample Locations**	Sampling and Collection Frequency	Type and Frequency of Analysis
4. Ingestion			
a. Milk	One sample from dairy farm having highest D/Q, one sample from each of three dairy farms (if available) calculated to have doses from I-131 >1 mrem/yr,and one sample from 10-20 miles.	Monthly or biweekly if animals are on pasture	Gamma isotopic and I-131 analysis of each sample
b. Fish and Invertebrates	One sample of one game specie of fish located upstream and downstream of the plant site. One sample of Invertebrates upstream and downstream of the plant site.	Samples collected semi-annually	Gamma isotopic analysis on each sample (edible portion only on fish).

** Sample locations are further described in Table 4.

Table 1 Monticello Nuclear Generating Plant Radiological Environmental Monitoring Program
Sample Collection and Analysis (cont'd)

Exposure Pathway and/or Sample	Number of Samples and Sample Locations**	Sampling and Collection Frequency	Type and Frequency of Analysis
4. Ingestion (cont'd)			
c. Food Products	One sample of corn and potatoes from any area that is irrigated by water in which liquid radioactive effluent has been discharged.***	At time of harvest	Gamma isotopic analysis of edible portion of each sample
	One sample of broad leaf vegetable from highest D/Q garden and one sample from 10-20 miles.	At time of harvest	I-131 analysis of edible portion of each sample

** Sample locations are further described by in Table 4.

*** As determined by methods outlined in section 2.3.

Table 2 Reporting Levels for Radioactivity Concentrations in Environmental Samples (Reporting Levels)

Analysis	Water (pCi/l)	Airborne Particulate or Gas (pCi/m^3)	Fish (pCi/kg, wet)	Milk (pCi/l)	Vegetables (pCi/kg, wet)
H-3	2×10^4 [a]				
Mn-54	1×10^3		3×10^4		
Fe-59	4×10^2		1×10^4		
Co-58	1×10^3		3×10^4		
Co-60	3×10^2		1×10^4		
Zn-65	3×10^2		2×10^4		
Zr-Nb-95	4×10^2 [b]				
I-131	2 [c]	0.9		3	1×10^2
Cs-134	30	10	1×10^3	60	1×10^3
Cs-137	50	20	2×10^3	70	2×10^3
Ba-La-140	2×10^2 [b]			3×10^2 [b]	

a - For drinking water samples
b - Total for parent and daughter
c - If no drinking water pathways exist, a value of 20 pCi/l may be used.

Table 3 Maximum Values for the Lower Limits of Detection (LLD)

Analysis	Water (pCi/l)	Airborne Particulate or Gas (pCi/m^3)	Fish (pCi/kg, wet)	Milk (pCi/l)	Food Products (pCi/kg, wet)	Sediment (pCi/kg, dry)
gross beta	4[b]	1×10^{-2}				
^{3}H	2000(1000[b])					
^{54}Mn	15		130			
^{59}Fe	30		260			
$^{58,60}Co$	15		130			
^{65}Zn	30		260			
$^{95}Zr\text{-}Nb$	15[c]					
^{131}I[d]	1[b]	7×10^{-2}		1	60	
$^{134,137}Cs$	15(10[b]), 18	1×10^{-2}	130	15	60	150
$^{140}Ba\text{-}La$	15[c]			15[c]		

Table 3 Maximum Values for the Lower Limits of Detection (LLD) (cont'd)

TABLE NOTATION

a - The LLD is the smallest concentration of radioactive material in a sample that will be detected with 95% probability with 5% probability of falsely concluding that a blank observation represents a "real" signal.

For a particular measurement system (which may include radiochemical separation):

$$LLD = \frac{4.66\, s_b}{E \cdot V \cdot 2.22 \cdot Y \cdot \exp(-\lambda\, \Delta t)}$$

where:

LLD is the apriori lower limit of detection as defined above (as picocurie per unit mass or volume),

s_b is the standard deviation of the background counting rate or of the counting rate of a blank sample as appropriate (as counts per minute). Typical values of E, V, Y and Δt ***SHALL*** be used in the calculations.

E is the counting efficiency (as counts per transformation)

V is the sample size (in units of mass or volume)

2.22 is the number of transformations per minute per picocurie

Y is the fraction radiochemical yield (when applicable)

λ is the radioactive decay constant for the particular radionuclide

Δt is the elapsed time between sample collection (or end the sample collection period) and time of counting

b - LLD for drinking water.

c - Total for parent and daughter

d - These LLDs apply only where "I-131 analysis" is specified.

e - Where "Gamma Isotopic Analysis" is specified, the LLD specifications applies to the following radionuclides: H-3, Mn-54, Fe-59, Co-58, Co-60, Zn-65, Zr-Nb-95, Cs-134, Cs-137 and Ba-La-140. Other peaks which are measurable and identifiable, together with the above nuclides ***SHALL*** be identified and reported.

Table 4 Monticello Nuclear Generating Plant Radiological Environmental Monitoring Program Sampling Locations

			Location		
Type of Sample	Code	Collection Site	Distance Miles	Compass Heading	Sector
River water	M-8c	Upstream of plant	w/in 1000 ft upstream of plant intake		
River water	M-9	Downstream of plant	w/in 1000 ft downstream of plant discharge		
Drinking water	M-14	City of Minneapolis	37.0	132	SE
Drinking water	M-10c	Campbell Farm	10.6	357	N
Drinking water	M-11	City of Monticello	3.3	127	SE
Drinking water	M-12	Plant Well No. 11	0.26	252	WSW
Drinking water	M-27	Wise Residence	0.64	207	SSW
Ground water	M-33	Monitoring Well No. 1	0.11	299	WNW
Ground water	M-34	Monitoring Well No. 2	0.14	301	WNW
Ground water	M-35	Monitoring Well No. 3	0.15	305	NW
Sediment-River	M-8c	Upstream of plant	w/in 1000 ft upstream of plant intake		
Sediment-River	M-9	Downstream of plant	w/in 1000 ft downstream of plant discharge		
Sediment-Shoreline	M-15	Montissippi Park	1.27	114	ESE
Periphyton or Macroinvertebrates	M-8c	Upstream of plant	w/in 1000 ft upstream of plant intake		
	M-9	Downstream of plant	w/in 1000 ft downstream of plant discharge		
Fish	M-8c	Upstream of plant	w/in 1000 ft upstream of plant intake		
Fish	M-9	Downstream of plant	w/in 1000 ft downstream of plant discharge		

Table 4 Monticello Nuclear Generating Plant Radiological Environmental Monitoring Program Sampling Locations (cont'd)

			Location		
Type of Sample	Code	Collection Site	Distance Miles	Compass Heading	Sector
Milk	M-10c	Campbell Farm	10.6	357	N
Milk	M-24	Weinand Farm	4.7	180	S
Milk	M-28	Hoglund Farm	3.8	300	WNW
Cultivated crops (broad leaf vegetables)					
	a,c	Available Producer	>10.0		
	M-27	Highest D/Q Garden**	0.64	207	SSW
(corn)*					
(potatoes)*					
Particulates and Radio-iodine					
(air)	M-1c	Air Station M-1	11.0	307	NW
(air)	M-2	Air Station M-2	0.8	140	SE
(air)	M-3	Air Station M-3	0.6	104	ESE
(air)	M-4	Air Station M-4	0.8	146	SSE
(air)	M-5	Air Station M-5	2.6	134	SE
Direct Radiation - (general area of the site boundary)					
(TLD)	M01A	Sherburne Ave. So.	0.75	353	N
(TLD)	M02A	Sherburne Ave. So.	0.79	23	NNE
(TLD)	M03A	Sherburne Ave. So.	1.29	55	NE
(TLD)	M04A	Biology Station Rd.	0.5	86	E
(TLD)	M05A	Biology Station Rd.	0.48	118	ESE
(TLD)	M06A	Biology Station Rd.	0.54	135	SE
(TLD)	M07A	County Road 75	0.5	155	SSE
(TLD)	M08A	County Road 75	0.48	172	S
(TLD)	M09A	County Road 75	0.38	209	SSW

* Collected only if plant discharges radioactive effluent into the river, then only from river irrigated fields. (See Section 2.1)

** As determined by Annual Land Use Census.

Table 4 Monticello Nuclear Generating Plant Radiological Environmental Monitoring Program Sampling Locations (cont'd)

			Location		
Type of Sample	Code	Collection Site	Distance Miles	Compass Heading	Sector
(TLD)	M10A	County Road 75	0.38	226	SW
(TLD)	M11A	County Road 75	0.4	239	WSW
(TLD)	M12A	County Road 75	0.5	262	W
(TLD)	M13A	North Boundary Rd.	0.89	324	NW
(TLD)	M14A	North Boundary Rd.	0.78	334	NNW
Direct Radiation - (about 4 to 5 miles distant from the plant)					
(TLD)	M01B	Sherco No. 1 Air Sta.	4.66	2	N
(TLD)	M02B	County Road 11	4.4	18	NNE
(TLD)	M03B	County Rd. 73 & 81	4.3	51	NE
(TLD)	M04B	County Rd. 73 (196th Street)	4.2	67	ENE
(TLD)	M05B	City of Big Lake	4.3	89	E
(TLD)	M06B	County Rd 14 & 196th Street	4.3	117	ESE
(TLD)	M07B	Monticello Industrial Dr.	4.3	136	SE
(TLD)	M08B	Residence Hwy 25 & Davidson Ave	4.6	162	SSE
(TLD)	M09B	Weinand Farm	4.7	178	S
(TLD)	M10B	Reisewitz Farm - Acacia Ave	4.2	204	SSW
(TLD)	M11B	Vanlith Farm - 97th Ave	4.0	228	SW
(TLD)	M12B	Lake Maria St. Park	4.2	254	WSW
(TLD)	M13B	Bridgewater Sta.	4.1	270	W
(TLD)	M14B	Anderson Res. - Cty Rd 111	4.3	289	WNW
(TLD)	M15B	Red Oak Wild Bird Farm	4.3	309	NW
(TLD)	M16B	Sand Plain Research Farm	4.4	341	NNW

Table 4 Monticello Nuclear Generating Plant Radiological Environmental Monitoring Program Sampling Locations (cont'd)

			Location		
Type of Sample	Code	Collection Site	Distance Miles	Compass Heading	Sector
Direct Radiation - (special interest locations)					
(TLD)	M01S	Osowski Fun Market	0.66	242	WSW
(TLD)	M02S	Krone Residence	0.5	224	SW
(TLD)	M03S	Big Oaks Park	1.53	102	ESE
(TLD)	M04S	Pinewood School	2.3	131	SE
(TLD)	M05S	Rivercrest Christian Academy	3.0	118	ESE
(TLD)	M06S	Monticello Public Works	2.6	134	SE
(TLD)	M01C	Kirchenbauer Farm	11.5	323	NW
(TLD)	M02C	Cty Rd 4 & 15	11.2	47	NE
(TLD)	M03C	Cty Rd 19 & Jason Ave	11.6	130	SE
(TLD)	M04C	Maple Lake Water Tower	10.3	226	SW

Notes on Table 4:

"c" denotes control locations. All other locations are indicator locations.
"a" Control "broad leaf" vegetable will be taken in locations as available outside 10 mi. EPZ.

The letters after TLD code numbers have the following meanings:

A Locations in the general area of the site boundary;
B Locations about 4 to 5 miles distant from the plant;
S Special interest locations.

OFFSITE DOSE CALCULATION MANUAL - TABLE OF CONTENTS

SECTION		PAGE
1.0	RECORD OF REVISION	2
2.0	RADIOLOGICAL ENVIRONMENTAL MONITORING PROGRAM	4
2.1	Monitoring Program	4
2.2	Land Use Census	6
2.3	Sampling	7
2.4	Interlaboratory Comparison Program	8
2.5	Bases	9
Figure 1	Radiation Environmental Monitoring Program Sampling Locations	10
Figure 2	4 - 5 Mile Ring, Control and Special Interest TLD Locations	11
Figure 3	Site Boundary TLD Locations	12
Table 1	Monticello Nuclear Generating Plant Radiological Environmental Monitoring Program Sample Collection and Analysis	13
Table 2	Reporting Levels for Radioactivity Concentrations in Environmental Samples (Reporting Levels)	18
Table 3	Maximum Values for the Lower Limits of Detection (LLD)	19
Table 4	Monticello Nuclear Generating Plant Radiological Environmental Monitoring Program Sampling Locations	21

Approval: PCR 01101052

l/plr

1.0 RECORD OF REVISION

Revision No.	Date	Reason for Revision
1	October - 2000	Moved previous ODCM-05.01 (RADIATION ENVIRONMENTAL MONITORING PROGRAM) into this document, changed the title to "RADIOLOGICAL ENVIRONMENTAL MONITORING PROGRAM" and incorporated Tech Spec section 4.16 "Radiation Environmental Monitoring Program" into this document.
2	November - 2001	Deleted incorrect reference in section 2.1.3.C.
3	November - 2002	Table 4, page 22, TLD M02S from Edgar Klucas Res., 1.1, 148, SE to Krone Residence, 0.5, 223, SW.
4	April - 2003	Table 4, page 20, TLD M-10_c from Goenner Farm, 12.4, 322, NW to Campbell Farm, 10.6, 357, N.
5	October - 2003	Change in the Critical Garden location.
6	November - 2003	Updated sampling locations on Figures 1, 2 and 3.
7	September - 2004	Change in the Critical Garden location. Change 2.4.1.A. to require cross check program to be NIST traceable. NRC no longer approves cross check programs.
8	June - 2005	Incorporated changes made during the conversion of the Current Technical Specifications to the Improved Technical Specifications. This includes dual step annotation.
9	January - 2006	Updated all sample locations with GPS. Corrected inconsistencies between location on map and actual location with GPS.
10	November - 2006	Incorporated changes suggested by NRC IP 71122.01 sections 02.01.d and 02.02.e as requested in GAR 01055347. Removed references to Current Technical Specifications.

Revision No.	Date	Reason for Revision
11	August 2007	Corrected location of air sampler M-4 to correct sector.

l/plr

2.0 RADIOLOGICAL ENVIRONMENTAL MONITORING PROGRAM

2.1 Monitoring Program

2.1.1 Controls

A. In accordance with Tech Spec 5.5.1, the Radiological Environmental Monitoring Program (REMP) ***SHALL*** be conducted as specified in Table 1.

B. Radioanalysis ***SHALL*** be conducted meeting the requirements of Table 3.

2.1.2 Applicability

At all times.

2.1.3 Action

A. Whenever the Radiological Environmental Monitoring Program is not being conducted as specified in Table 1 the Annual Radiological Environmental Operating Report ***SHALL*** include a description of the reasons for not conducting the program as required and plans for preventing a recurrence.

B. Deviations are permitted from the required sampling schedule if samples are unobtainable due to hazardous conditions, seasonable unavailability, or to malfunctions of automatic sampling equipment. If the latter occurs, every effort ***SHALL*** be made to complete corrective action prior to the end of the next sampling period.

C. With the level of radioactivity in an environmental sampling medium exceeding the reporting levels of Table 2 when averaged over any calendar quarter, submit a special report to the Commission within 30 days from the end of the affected calendar quarter. When more than one of the radionuclides in Table 2 are detected in the sampling medium, this report ***SHALL*** be submitted if:

$$\frac{\text{concentration (1)}}{\text{limit level (1)}} + \frac{\text{concentration (2)}}{\text{limit level (2)}} + \ldots > 1.0$$

When radionuclides other than those in Table 2 are detected and are the result of plant effluents, this report ***SHALL*** be submitted if the potential annual dose to an individual is equal to or greater than the calendar year limits of ODCM-02.01 (LIQUID EFFLUENTS) Control 1.2.1.A, ODC-M-03.01 (GASEOUS EFFLUENTS) Control 1.2.1.A, or ODCM-03.01 Control 1.3.1.A. This report is not required if the measured level of radioactivity was not the result of plant effluents; however, in such an event, the condition ***SHALL*** be reported and described in the Annual Radiological Environmental Operating Report.

D. Although deviations from the sampling schedule are permitted under Paragraph B. above, whenever milk or broad leaf vegetation samples can no longer be obtained from the designated sample locations required by Table 1, the Annual Radiological Environmental Operating Report ***SHALL*** explain why the samples can no longer be obtained and identify the new locations which have been or will be added to and deleted from the monitoring program.

2.1.4 Surveillance Requirements

The radiological environmental monitoring samples ***SHALL*** be collected pursuant to Table 1 from the specific locations in Table 4 and ***SHALL*** be analyzed pursuant to the requirements of Table 1 and the detection capabilities required by Table 3.

2.2 Land Use Census

2.2.1 Controls

A Land Use Census ***SHALL*** be conducted and ***SHALL*** identify:

A. The location of the nearest milk animal, the nearest residence, and the nearest garden of greater than 500 ft^2 producing broad leaf vegetables in each of the 16 meteorological sectors within a distance of 5 miles.

B. The location of ALL milk animals and ALL 500 ft^2 or greater gardens producing broad leaf vegetables in each of the meteorological sectors within a distance of 3 miles.

2.2.2 Applicability

At all times.

2.2.3 Action

A. With a Land Use Census identifying a location which yields a calculated dose or dose commitment (via the same exposure pathway) 20 percent greater than at a location from which samples are currently being obtained in accordance with Controls 2.1.1.A., the Annual Radioactive Effluent Release Report for this period ***SHALL*** identify the new location. The new location ***SHALL*** be added to the Radiological Environmental Monitoring Program within 30 days. The sampling location, excluding the control station location, having the lowest calculated dose or dose commitment (via the same exposure pathway) may be deleted from this monitoring program after October 31 of the year in which this Land Use Census was conducted.

2.2.4 Surveillance Requirements

A. The Land Use Census ***SHALL*** be conducted at least once per year between the dates of May 1 and October 31 by door to door survey, aerial survey, or by consulting local agricultural associations.

2.3 Sampling

Table 1 and Figure 1 specify the current sampling locations for the radiological environmental monitoring program. These sampling locations are based on the latest land use census and the Site Groundwater Characterization Study.

2.3.1 Land Use Census

A. If it is learned from an annual census that milk animals or gardens are present at the location which yields a calculated thyroid dose greater than those locations previously sampled, the new milk animal or garden locations resulting in the higher calculated doses ***SHALL*** be added to the surveillance program as soon as practicable. Sample locations (except the control) having lower calculated doses may be dropped from the program at the end of the grazing or growing season (October 31) to keep the total number of sample locations constant.

B. If the plant begins routine discharges of liquid radioactive effluent into the Mississippi River, a land use survey will be conducted to determine whether any crops are irrigated with water taken from the Mississippi River between the plant discharge canal and a point 5 miles downstream. If edible crops are being irrigated from Mississippi River water, appropriate samples will be collected and analyzed per Table 1.

2.3.2 Site Groundwater Characterization Study

Review of the available groundwater piezometric data shows that shallow groundwater generally flows toward the Mississippi River, and possible upward flow gradients are present from the deep groundwater aquifer toward the shallow groundwater at the MNGP site. Therefore, any tritium releases into the subsoil environment should move towards the Mississippi River in the shallow groundwater without potentially impacting the deeper groundwater in rock. The average velocity of shallow groundwater flow is estimated at approximately 3 feet per day.

A system of five additional shallow groundwater monitoring wells was recommended to complement existing groundwater monitoring wells identified as M-33, M-34 and M-35. This monitoring system will effectively confirm the shallow groundwater flow directions during the year and will help to demonstrate that the potential impact of any releases within the plant area on groundwater inland of the plant is negligible. When the additional wells are installed, they will be added to the sampling locations listed in Table 4.

2.4 Interlaboratory Comparison Program

2.4.1 Controls

A. Analyses ***SHALL*** be performed on radioactive materials supplied as part of a NIST traceable cross-check program. This program involves the analyses of samples provided by a control laboratory and comparison of results with those of the control laboratory as well as with other laboratories which receive portions of the same samples. Media used in this program (air, milk, water, etc.) ***SHALL*** be limited to those found in the Radiological Environmental Monitoring Program.

2.4.2 Applicability

At all times.

2.4.3 Action

A. When required analyses are not performed, corrective action ***SHALL*** be reported in the Annual Radiological Environmental Operating Report.

2.4.4 Surveillance Requirements

A. The summary results of analyses performed as part of the above required program ***SHALL*** be included in the Annual Radiological Environmental Operating Report.

2.5 Bases

2.5.1 Monitoring Program

Control 2.1.1 provides measurements of radiation and radioactive materials in those exposure pathways and for those radionuclides which lead to the highest potential radiation exposures of individuals resulting from the plant operation. This program thereby supplements the radiological effluent monitoring by verifying that the measurable concentrations of radioactive materials and levels of radiation are not higher than expected on the basis of the effluent measurements and modeling of the environmental exposure pathways. After a specific program has been in effect for at least 3 years of operation, program changes may be initiated based on this experience.

The detection capabilities required by Table 1 are state-of-the art for routine environmental measurements in industrial laboratories. The LLDs for drinking water meet the requirement of 40CFR Part 141.

2.5.2 Land Use Census

Control 2.2.1 is provided to ensure that changes in the use of off-site areas are identified and that modifications to the monitoring program are made if required by the results of this census. The best survey information from door-to-door, aerial or consulting with local agricultural associations ***SHALL*** be used. This census satisfies the requirements of Section IV.B.3 of Appendix I to 10CFR Part 50. Restricting the census to gardens of greater than 500 square feet provides assurance that significant exposure pathways via broad leaf vegetables will be identified and monitored since a garden of this size is the minimum required to produce the quantity (26 kg/year) of broad leaf vegetables assumed in Regulatory Guide 1.109 for consumption by a child. To determine this minimum garden size, the following assumptions were used: 1) that 20% of the garden was used for growing broad leaf vegetables (i.e., similar to lettuce and cabbage), and 2) a vegetation yield of 2 kg/square meter.

2.5.3 Sampling

Section 2.3.1.B. is worded to conform to LAR-39 and its associated NRC Safety Evaluation (SER).

2.5.4 Interlaboratory Comparison Program

The requirement for participation in an interlaboratory comparison program is provided to ensure that independent checks on the precision and accuracy of the measurements of radioactive material in environmental sample matrices are performed as part of a quality assurance program for environmental monitoring in order to demonstrate that the results are reasonably valid.

Figure 1 Radiation Environmental Monitoring Program Sampling Locations

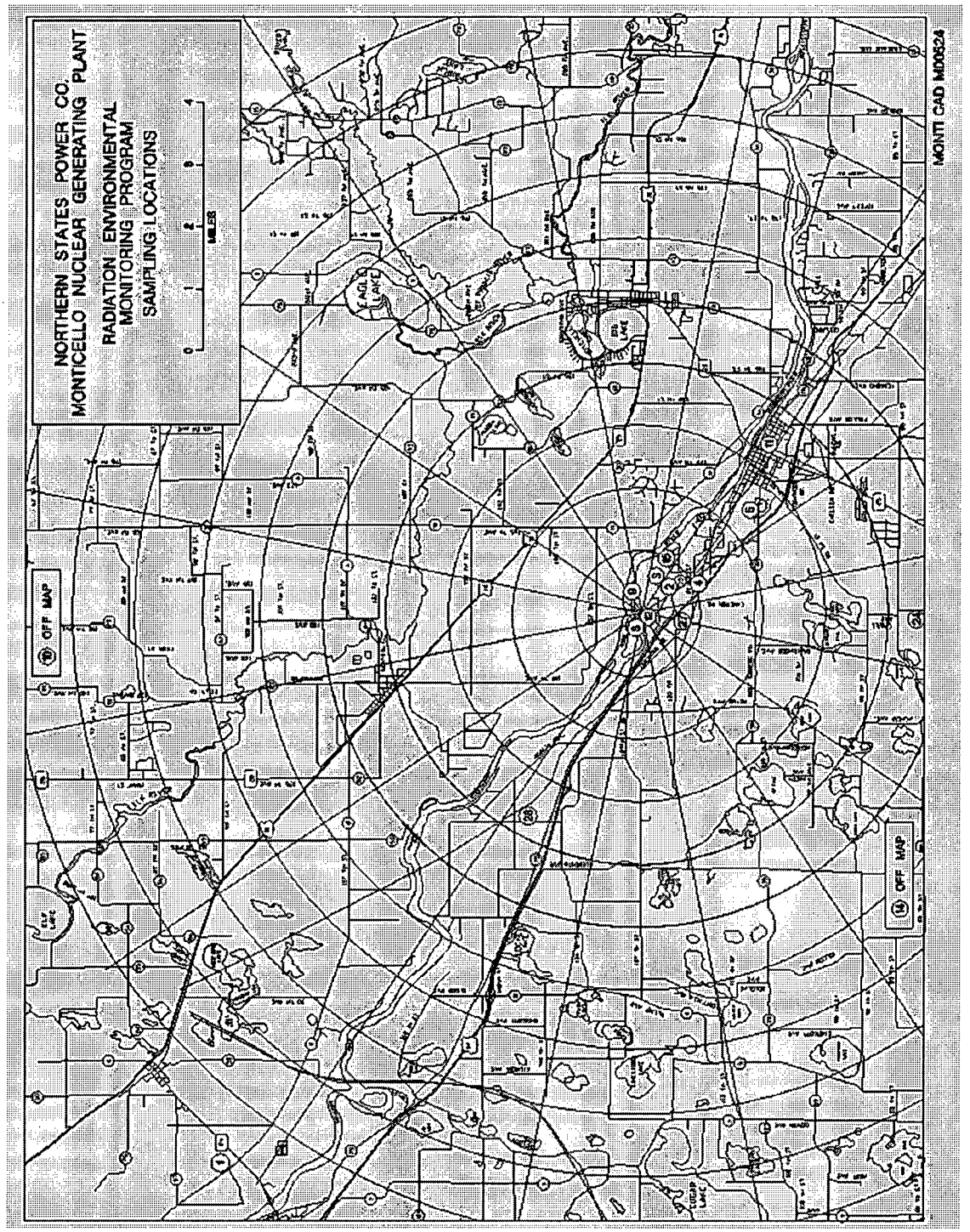

Figure 2 4 - 5 Mile Ring, Control and Special Interest TLD Locations

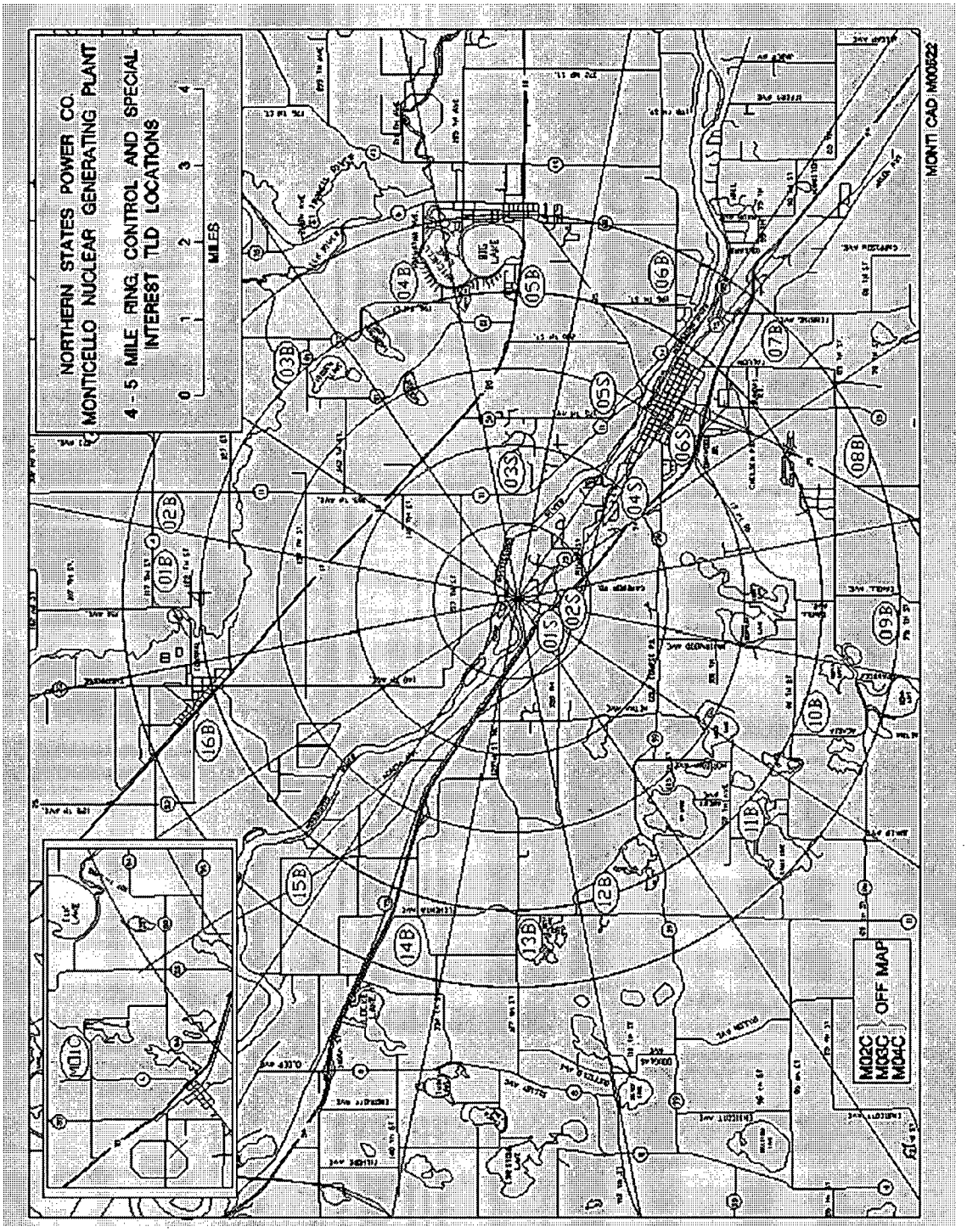

l/plr

Figure 3 Site Boundary TLD Locations

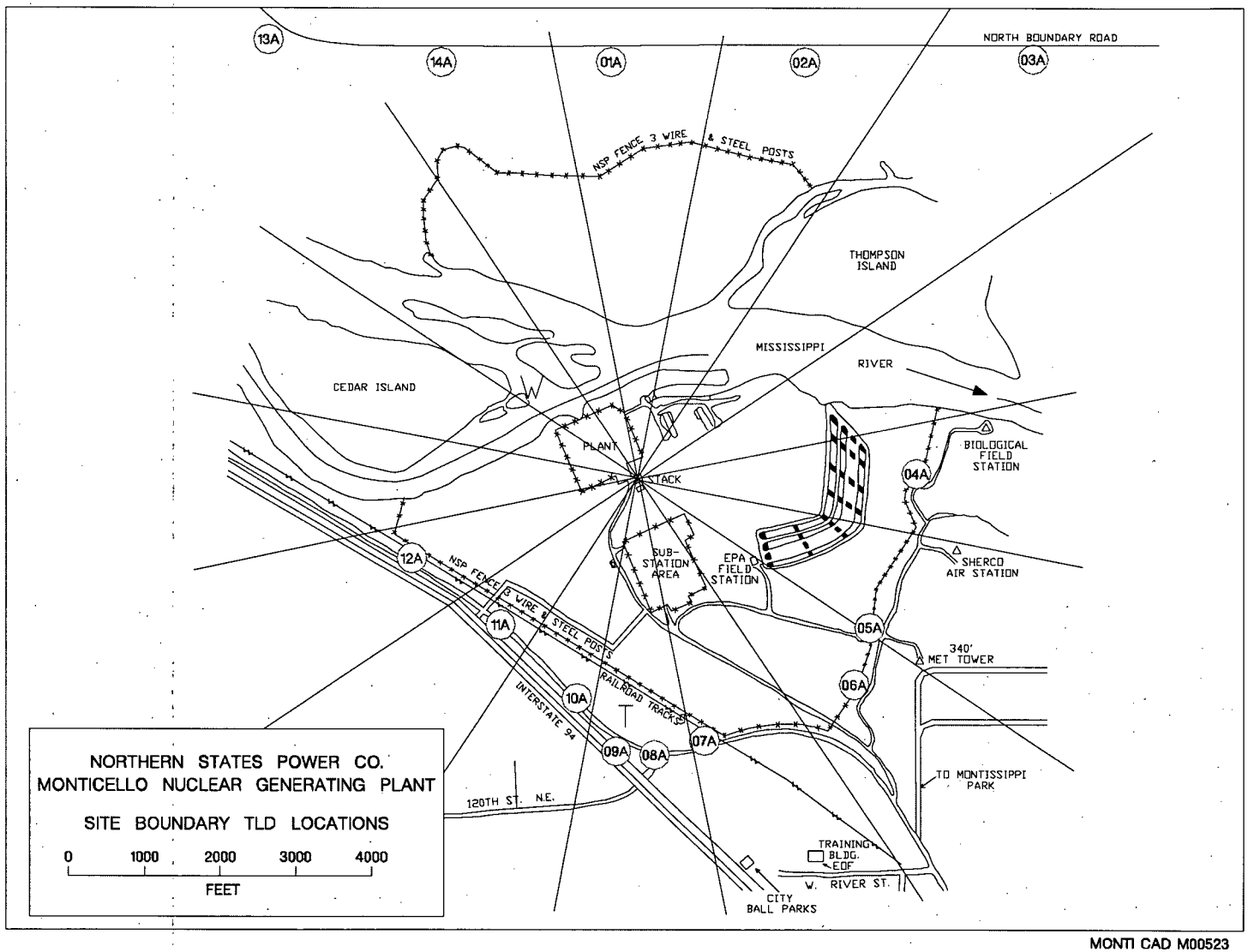

MONTI CAD M00523

Table 1 Monticello Nuclear Generating Plant Radiological Environmental Monitoring Program
Sample Collection and Analysis

Exposure Pathway and/or Sample	Number of Samples and Sample Locations**	Sampling and Collection Frequency	Type and Frequency of Analysis
1. Airborne Radioiodine & Particulates	Samples from 5 locations: 3 samples from offsite locations (in different sectors) of the highest calculated annual average ground level D/Q, 1 sample from the vicinity of a community having the highest calculated annual average ground-level D/Q, and 1 sample from a control location specified in Table 4.	Continuous Sampler operation with sample collection weekly.	Radioiodine analysis Weekly for I-131 Particulate: Gross beta activity on each filter weekly*. Analysis ***SHALL*** be performed more than 24 hours following filter change. Perform gamma isotopic analysis on composite (by location) sample quarterly.
2. Direct Radiation	40 TLD stations established with duplicate dosimeters placed at the following locations:****	Quarterly	Gamma Dose quarterly

* If gross beta activity in any indication sample exceeds 10 times the yearly average of the control sample, a gamma isotopic analysis is required.

** Sample locations are further described in Table 4.

**** Three control TLD locations have only one dosimeter.

Table 1 Monticello Nuclear Generating Plant Radiological Environmental Monitoring Program
Sample Collection and Analysis (cont'd)

Exposure Pathway and/or Sample	Number of Samples and Sample Locations**	Sampling and Collection Frequency	Type and Frequency of Analysis
2. Direct Radiation (cont'd)	1. Using the 16 meterological sectors as guidelines, an inner ring of stations in the general area of the site boundary is established and an outer ring of stations at 4 to 5 mile distance from the plant site is established. Because of inaccessibility, two sectors in the inner ring are not covered. 2. Ten dosimeters are established at special interest areas and four control stations.		
3. Waterborne a. Surface	Upstream & downstream locations.	Monthly composite of weekly samples (water & ice conditions permitting)	Gamma Isotopic analysis of each monthly composite Tritium analysis of quarterly composites of monthly composites

** Sample locations are further described in Table 4.

Table 1 Monticello Nuclear Generating Plant Radiological Environmental Monitoring Program
Sample Collection and Analysis (cont'd)

Exposure Pathway and/or Sample	Number of Samples and Sample Locations**	Sampling and Collection Frequency	Type and Frequency of Analysis
3. Waterborne (cont'd)			
b. Ground	Samples from one or two sources.	Quarterly	Gamma isotopic and tritium analysis of each sample
c. Drinking	Three samples from wells within 5 miles of the plant site and one sample from a well greater than 10 miles from the plant site.	Quarterly	Gamma Isotopic and tritium analyses of each sample
	One sample from the City of Minneapolis water supply.	Monthly composite of weekly samples	I-131 Analysis and Gross beta and Gamma isotopic analysis of each monthly composite Tritium analysis of quarterly composites of monthly composites
d. Sediment from Shoreline	One sample upstream of plant, one sample downstream of plant, and one sample from shoreline of recreational area.	Semiannually	Gamma isotopic analysis of each sample

** Sample locations are further described in Table 4.

Table 1 Monticello Nuclear Generating Plant Radiological Environmental Monitoring Program
Sample Collection and Analysis (cont'd)

Exposure Pathway and/or Sample	Number of Samples and Sample Locations**	Sampling and Collection Frequency	Type and Frequency of Analysis
4. Ingestion			
a. Milk	One sample from dairy farm having highest D/Q, one sample from each of three dairy farms (if available) calculated to have doses from I-131 >1 mrem/yr,and one sample from 10-20 miles.	Monthly or biweekly if animals are on pasture	Gamma isotopic and I-131 analysis of each sample
b. Fish and Invertebrates	One sample of one game specie of fish located upstream and downstream of the plant site. One sample of Invertebrates upstream and downstream of the plant site.	Samples collected semi-annually	Gamma isotopic analysis on each sample (edible portion only on fish).

** Sample locations are further described in Table 4.

Table 1 Monticello Nuclear Generating Plant Radiological Environmental Monitoring Program
Sample Collection and Analysis (cont'd)

Exposure Pathway and/or Sample	Number of Samples and Sample Locations**	Sampling and Collection Frequency	Type and Frequency of Analysis
4. Ingestion (cont'd)			
c. Food Products	One sample of corn and potatoes from any area that is irrigated by water in which liquid radioactive effluent has been discharged.***	At time of harvest	Gamma isotopic analysis of edible portion of each sample
	One sample of broad leaf vegetable from highest D/Q garden and one sample from 10-20 miles.	At time of harvest	I-131 analysis of edible portion of each sample

** Sample locations are further described by in Table 4.

*** As determined by methods outlined in section 2.3.

Table 2 Reporting Levels for Radioactivity Concentrations in Environmental Samples (Reporting Levels)

Analysis	Water (pCi/l)	Airborne Particulate or Gas (pCi/m^3)	Fish (pCi/kg, wet)	Milk (pCi/l)	Vegetables (pCi/kg, wet)
H-3	2×10^4 [a]				
Mn-54	1×10^3		3×10^4		
Fe-59	4×10^2		1×10^4		
Co-58	1×10^3		3×10^4		
Co-60	3×10^2		1×10^4		
Zn-65	3×10^2		2×10^4		
Zr-Nb-95	4×10^2 [b]				
I-131	2 [c]	0.9		3	1×10^2
Cs-134	30	10	1×10^3	60	1×10^3
Cs-137	50	20	2×10^3	70	2×10^3
Ba-La-140	2×10^2 [b]			3×10^2 [b]	

a - For drinking water samples
b - Total for parent and daughter
c - If no drinking water pathways exist, a value of 20 pCi/l may be used.

Table 3 Maximum Values for the Lower Limits of Detection (LLD)

Analysis	Water (pCi/l)	Airborne Particulate or Gas (pCi/m^3)	Fish (pCi/kg, wet)	Milk (pCi/l)	Food Products (pCi/kg, wet)	Sediment (pCi/kg, dry)
gross beta	4[b]	1×10^{-2}				
^{3}H	2000(1000[b])					
^{54}Mn	15		130			
^{59}Fe	30		260			
$^{58,60}Co$	15		130			
^{65}Zn	30		260			
$^{95}Zr\text{-}Nb$	15[c]					
^{131}I[d]	1[b]	7×10^{-2}		1	60	
$^{134,137}Cs$	15(10[b]), 18	1×10^{-2}	130	15	60	150
$^{140}Ba\text{-}La$	15[c]			15[c]		

Table 3 Maximum Values for the Lower Limits of Detection (LLD) (cont'd)

TABLE NOTATION

a - The LLD is the smallest concentration of radioactive material in a sample that will be detected with 95% probability with 5% probability of falsely concluding that a blank observation represents a "real" signal.

For a particular measurement system (which may include radiochemical separation):

$$LLD = \frac{4.66\ s_b}{E \cdot V \cdot 2.22 \cdot Y \cdot \exp(-\lambda\ \Delta\ t)}$$

where:

LLD is the apriori lower limit of detection as defined above (as picocurie per unit mass or volume),

s_b is the standard deviation of the background counting rate or of the counting rate of a blank sample as appropriate (as counts per minute). Typical values of E, V, Y and Δt ***SHALL*** be used in the calculations.

E is the counting efficiency (as counts per transformation)

V is the sample size (in units of mass or volume)

2.22 is the number of transformations per minute per picocurie

Y is the fraction radiochemical yield (when applicable)

λ is the radioactive decay constant for the particular radionuclide

Δ t is the elapsed time between sample collection (or end the sample collection period) and time of counting

b - LLD for drinking water.

c - Total for parent and daughter

d - These LLDs apply only where "I-131 analysis" is specified.

e - Where "Gamma Isotopic Analysis" is specified, the LLD specifications applies to the following radionuclides: H-3, Mn-54, Fe-59, Co-58, Co-60, Zn-65, Zr-Nb-95, Cs-134, Cs-137 and Ba-La-140. Other peaks which are measurable and identifiable, together with the above nuclides ***SHALL*** be identified and reported.

Table 4 Monticello Nuclear Generating Plant Radiological Environmental Monitoring Program Sampling Locations

			Location		
Type of Sample	Code	Collection Site	Distance Miles	Compass Heading	Sector
River water	M-8c	Upstream of plant	w/in 1000 ft upstream of plant intake		
River water	M-9	Downstream of plant	w/in 1000 ft downstream of plant discharge		
Drinking water	M-14	City of Minneapolis	37.0	132	SE
Drinking water	M-10c	Campbell Farm	10.6	357	N
Drinking water	M-11	City of Monticello	3.3	127	SE
Drinking water	M-12	Plant Well No. 11	0.26	252	WSW
Drinking water	M-27	Wise Residence	0.64	207	SSW
Ground water	M-33	Monitoring Well No. 1	0.11	299	WNW
Ground water	M-34	Monitoring Well No. 2	0.14	301	WNW
Ground water	M-35	Monitoring Well No. 3	0.15	305	NW
Sediment-River	M-8c	Upstream of plant	w/in 1000 ft upstream of plant intake		
Sediment-River	M-9	Downstream of plant	w/in 1000 ft downstream of plant discharge		
Sediment-Shoreline	M-15	Montissippi Park	1.27	114	ESE
Periphyton or Macroinvertebrates	M-8c	Upstream of plant	w/in 1000 ft upstream of plant intake		
	M-9	Downstream of plant	w/in 1000 ft downstream of plant discharge		
Fish	M-8c	Upstream of plant	w/in 1000 ft upstream of plant intake		
Fish	M-9	Downstream of plant	w/in 1000 ft downstream of plant discharge		

Table 4 Monticello Nuclear Generating Plant Radiological Environmental Monitoring Program Sampling Locations (cont'd)

			Location		
Type of Sample	Code	Collection Site	Distance Miles	Compass Heading	Sector
Milk	M-10c	Campbell Farm	10.6	357	N
Milk	M-24	Weinand Farm	4.7	180	S
Milk	M-28	Hoglund Farm	3.8	300	WNW
Cultivated crops					
(broad leaf vegetables)					
	a,c	Available Producer	>10.0		
	M-27	Highest D/Q Garden**	0.64	207	SSW
(corn)*					
(potatoes)*					
Particulates and Radio-iodine					
(air)	M-1c	Air Station M-1	11.0	307	NW
(air)	M-2	Air Station M-2	0.8	140	SE
(air)	M-3	Air Station M-3	0.6	104	ESE
(air)	M-4	Air Station M-4	0.8	147	SSE
(air)	M-5	Air Station M-5	2.6	134	SE
Direct Radiation - (general area of the site boundary)					
(TLD)	M01A	Sherburne Ave. So.	0.75	353	N
(TLD)	M02A	Sherburne Ave. So.	0.79	23	NNE
(TLD)	M03A	Sherburne Ave. So.	1.29	55	NE
(TLD)	M04A	Biology Station Rd.	0.5	86	E
(TLD)	M05A	Biology Station Rd.	0.48	118	ESE
(TLD)	M06A	Biology Station Rd.	0.54	135	SE
(TLD)	M07A	County Road 75	0.5	155	SSE
(TLD)	M08A	County Road 75	0.48	172	S
(TLD)	M09A	County Road 75	0.38	209	SSW

* Collected only if plant discharges radioactive effluent into the river, then only from river irrigated fields. (See Section 2.1)

** As determined by Annual Land Use Census.

Table 4 Monticello Nuclear Generating Plant Radiological Environmental Monitoring Program Sampling Locations (cont'd)

			Location		
Type of Sample	Code	Collection Site	Distance Miles	Compass Heading	Sector
(TLD)	M10A	County Road 75	0.38	226	SW
(TLD)	M11A	County Road 75	0.4	239	WSW
(TLD)	M12A	County Road 75	0.5	262	W
(TLD)	M13A	North Boundary Rd.	0.89	324	NW
(TLD)	M14A	North Boundary Rd.	0.78	334	NNW
Direct Radiation - (about 4 to 5 miles distant from the plant)					
(TLD)	M01B	Sherco No. 1 Air Sta.	4.66	2	N
(TLD)	M02B	County Road 11	4.4	18	NNE
(TLD)	M03B	County Rd. 73 & 81	4.3	51	NE
(TLD)	M04B	County Rd. 73 (196th Street)	4.2	67	ENE
(TLD)	M05B	City of Big Lake	4.3	89	E
(TLD)	M06B	County Rd 14 & 196th Street	4.3	117	ESE
(TLD)	M07B	Monticello Industrial Dr.	4.3	136	SE
(TLD)	M08B	Residence Hwy 25 & Davidson Ave	4.6	162	SSE
(TLD)	M09B	Weinand Farm	4.7	178	S
(TLD)	M10B	Reisewitz Farm - Acacia Ave	4.2	204	SSW
(TLD)	M11B	Vanlith Farm - 97th Ave	4.0	228	SW
(TLD)	M12B	Lake Maria St. Park	4.2	254	WSW
(TLD)	M13B	Bridgewater Sta.	4.1	270	W
(TLD)	M14B	Anderson Res. - Cty Rd 111	4.3	289	WNW
(TLD)	M15B	Red Oak Wild Bird Farm	4.3	309	NW
(TLD)	M16B	Sand Plain Research Farm	4.4	341	NNW

Table 4 Monticello Nuclear Generating Plant Radiological Environmental Monitoring Program Sampling Locations (cont'd)

			Location		
Type of Sample	Code	Collection Site	Distance Miles	Compass Heading	Sector
Direct Radiation - (special interest locations)					
(TLD)	M01S	Osowski Fun Market	0.66	242	WSW
(TLD)	M02S	Krone Residence	0.5	224	SW
(TLD)	M03S	Big Oaks Park	1.53	102	ESE
(TLD)	M04S	Pinewood School	2.3	131	SE
(TLD)	M05S	Rivercrest Christian Academy	3.0	118	ESE
(TLD)	M06S	Monticello Public Works	2.6	134	SE
(TLD)	M01C	Kirchenbauer Farm	11.5	323	NW
(TLD)	M02C	Cty Rd 4 & 15	11.2	47	NE
(TLD)	M03C	Cty Rd 19 & Jason Ave	11.6	130	SE
(TLD)	M04C	Maple Lake Water Tower	10.3	226	SW

Notes on Table 4:

"c" denotes control locations. All other locations are indicator locations.
"a" Control "broad leaf" vegetable will be taken in locations as available outside 10 mi. EPZ.

The letters after TLD code numbers have the following meanings:

A Locations in the general area of the site boundary;
B Locations about 4 to 5 miles distant from the plant;
S Special interest locations.

OFFSITE DOSE CALCULATION MANUAL - TABLE OF CONTENTS

SECTION		PAGE
1.0	RECORD OF REVISION	2
2.0	REPORTING REQUIREMENTS	3
2.1	Radioactive Effluent Release Report	3
2.2	Radiological Environmental Operating Report	4
2.3	Annual Summary of Meteorological Data	5
2.4	Industry Initiative on Groundwater Protection	6
2.5	Record Retention	7

Approval: PCR 01073390

l/plr

1.0 RECORD OF REVISION

Revision No.	Date	Reason for Revision
1	October - 2000	Moved previous ODCM-08.01 contents to ODCM-APP-B, Rev 0. Changed this section name to "REPORTING REQUIREMENTS" and incorporated applicable sections of T.S. sections 6.6.A, 6.6.B, 6.7.A.4, 6.7.A.5, and 6.7.C into this document.
2	February - 2005	Corrected above revision number to Revision 1. Changed 2.5.1. from T.S.6.6.A to OQAP, section 19.12.1. Changed 2.5.2. from T.S.6.6.B to OQAP, section 19.12.2.
3	June - 2005	Incorporated changes made during the conversion of the the Current Technical Specifications to the Improved Technical Specifications. This includes dual step annotation.
4.	January - 2007	Incorporated NEI Enhanced Groundwater Protection initiative reporting requirements. Changed 2.5.1 to remove reference to OQAP and refer to Fleet Procedure FP-G-RM-01 (RECORDS MANAGEMENT). Incorporated 2.5.2 into 2.5.1.

2.0 REPORTING REQUIREMENTS

2.1 Radioactive Effluent Release Report

In accordance with Tech Spec 5.6.2, the Radioactive Effluent Release Report covering the operation of the unit ***SHALL*** be submitted in accordance with 10CFR 50.36A.

2.1.1 The Radioactive Effluent Release Report covering the operation of the unit during the previous calendar year ***SHALL*** be submitted prior to May 15 of each calendar year.

2.1.2 The Radioactive Effluent Release Report ***SHALL*** include a summary of the quantities of radioactive liquid and gaseous effluents and solid waste released as outlined in Appendix B of Regulatory Guide 1.21, Revision 1, June, 1974, with the data summarized on a quarterly basis. In the event that some results are not available for inclusion with the report, the report ***SHALL*** be submitted noting and explaining the reasons for the missing results. The missing data ***SHALL*** be submitted as soon as possible in a supplementary report.

2.1.3 The Radioactive Effluent Release Report ***SHALL*** include an assessment of the radiation doses from radioactive effluents released from the unit during the previous calendar year. This report ***SHALL*** also include an assessment of the radiation doses from radioactive liquid and gaseous effluents to the individuals due to their activities inside the site boundary (ODCM-02.01 Figure 1 and ODCM-03.01 Figure 1) during the report period. All assumptions used in making these assessments (i.e., specific activity, exposure time and location) ***SHALL*** be included in the reports. The assessment of radiation doses ***SHALL*** be performed in accordance with the ODCM or standard NRC computer codes.

2.1.4 The Radioactive Effluent Release Report ***SHALL*** also include an assessment of radiation doses to the most likely exposed member of the public from reactor releases and other nearby uranium fuel cycle sources (including doses from primary effluent pathways and direct radiation) for the previous 12 consecutive months to show compliance with 40CFR190, Environmental Radiation Protection Standards for Nuclear Power Operation.

2.1.5 The Radioactive Effluent Release Report ***SHALL*** include the following information for solid waste shipped off-site during the report period.

A. Container volume

B. Total curie quantity (specify whether determined by measurements or estimate),

C. Principal radionuclides (specify whether determined by measurement or estimate),

D. Type of waste (e.g., spent resin, compacted dry waste),

E. Type of container (e.g., LSA, Type A, Type B, Large Quantity), and

F. Solidification agent (e.g., cement, urea formaldehyde).

2.1.6 The Radioactive Effluent Release Report ***SHALL*** include unplanned releases from the site of radioactive materials in gaseous and liquid effluents on a quarterly basis.

2.1.7 The Radioactive Effluent Release Report ***SHALL*** include a description of changes to the PCP.

2.1.8 The Radioactive Effluent Release Report ***SHALL*** contain a report of when milk or leafy green vegetable samples specified in ODCM-07.01 Table 1 cannot be obtained from the designated sample locations, and identify the new locations added to and deleted from the monitoring program.

2.1.9 The Radioactive Effluent Release Report ***SHALL*** identify Land Use Census identified locations which yield a calculated dose or dose commitment (via the same exposure pathway) 20 percent greater than at a location from which samples are currently being obtained in accordance with ODCM-07.01 Control 2.1.1.

2.1.10 The Radioactive Effluent Release Report ***SHALL*** include all on-site and off-site groundwater sample results taken in support of the Industry Initiative unless they will be documented in the Annual Radiological Environmental Operating Report.

2.1.11 The Radioactive Effluent Release Report ***SHALL*** include a description of all leaks or spills that are communicated per section 2.4.2.

2.2 Radiological Environmental Operating Report

In accordance with Tech Spec 5.6.1, the Annual Radiological Environmental Operating Report covering the operation of the off-site monitoring program ***SHALL*** be submitted and ***SHALL*** include:

2.2.1 The Annual Radiological Environmental Operating Report covering the operation of the site during the previous calendar year ***SHALL*** be submitted by May 15 of each year. The report ***SHALL*** include summaries, interpretations, and analyses of trends of the results of the Radiological Environmental Monitoring Program for the reporting period. The material provided ***SHALL*** be consistent with the objectives outlined in the Offsite Dose Calculation Manual (ODCM), and in 10CFR50, Appendix I, Sections IV.B.2, IV.B.3, and IV.C.

2.2.2 The Annual Radiological Environmental Operating Report ***SHALL*** include the results of analyses of all radiological environmental samples and of all environmental radiation measurements taken during the period pursuant to the locations specified in the table and figures in the ODCM, as well as summarized and tabulated results of these analyses and measurements in the format of the table in the Radiological Assessment Branch Technical Position, Revision 1, November 1979. In the event that some individual results are not available for inclusion with the report, the report ***SHALL*** be submitted noting and explaining the reasons for the missing results. The missing data ***SHALL*** be submitted in a supplementary report as soon as possible.

2.2.3 The report ***SHALL*** also include the results of the land use census required by ODCM-07.01 Control 2.2.1. If harmful effects or evidence of irreversible damage are detected by the monitoring, the report ***SHALL*** provide an analysis of the problem and a planned course of action to alleviate the problem.

2.2.4 The Radiological Environmental Operating Report ***SHALL*** include the following: a summary description of the Radiological Environmental Monitoring Program; a map of sampling locations keyed to a table giving distances and directions from the reactor; and the results of licensee participation in the Interlaboratory Comparison Program, required by ODCM-07.01 Control 2.4.1.A.

2.2.5 The Radiological Environmental Operating Report ***SHALL*** include reasons for all deviations from the REMP sampling program as specified in ODCM-07.01 Table 1 and plans for the prevention of a recurrence, if applicable.

2.2.6 If the level of radioactivity in an environmental sampling medium at a specified location exceeds the reporting levels of ODCM-07.01 Table 2 for the sample type specified in ODCM-07.01 Table 1 and is NOT the result of plant effluents, the condition ***SHALL*** be reported in the Radiological Environmental Operating Report.

2.2.7 A summary of the Interlaboratory Comparison Program ***SHALL*** be included in the Radiological Environmental Operating Report. If the required Interlaboratory Comparison Program analyses are NOT performed, corrective action ***SHALL*** be reported in the Radiological Environmental Operating Report.

2.2.8 The Radiological Environmental Operating Report ***SHALL NOT*** include the complete analysis data tables. These tables contain the results of each sample analysis and ***SHALL*** be maintained by the licensee.

2.3 Annual Summary of Meteorological Data

The annual summary of meteorological data ***SHALL*** be submitted for the previous calendar year in the form of joint frequency tables of wind speed, wind direction, and atmospheric stability at the request of the Nuclear Regulatory Commission.

2.4 Industry Initiative on Groundwater Protection

NOTE: For purposes of this section, groundwater is defined as any subsurface moisture or water, regardless of where it is located beneath the earths surface; any water located in wells, regardless of depth, type, or whether it is potable; water in storm drains, unless it has been demonstrated that the storm drains do not leak to ground; and water in sumps that communicate with subsurface water.

2.4.1 30-day report to NRC

A. Submit the NRC within 30 days, a special report for any on-site or off-site groundwater sample that:

1. Exceeds the ODCM criteria for 30-day reporting for off-site samples; and

2. Could potentially reach groundwater that is or could be used in the future as a source of drinking water. Any groundwater that is potable should be considered as a potential source of drinking water.

B. Include the following items in the report:

1. A statement that the report is being submitted as part of NEI Enhanced Groundwater Protection Initiative;

2. Level and nature of the contaminant;

3. Actions taken and related sample results to date;

4. Determination of potential or bounding annual dose to a member of the public; and

5. Any necessary corrective actions to be taken to reduce the potential annual dose to a member of the public to less than the calendar year limits of the ODCM.

C. Concurrently, provide copies of the 30-day written report to the designated State and Local Officials.

2.4.2 Voluntary Communications to State and Local Officials

A. Make informal communications by end of next business day to the designated State and Local Officials for the following events:

1. An inadvertent unmonitored on-site spill or leak from a radiologically contaminated source to the environment that has or can potentially get into the groundwater and exceeds 100 gallons or volume cannot be qualified;

2. Any leak from higher risk systems (e.g., spent fuel pool) that can potentially get into the groundwater;

3. An off-site groundwater or surface water sample exceeds the reporting criteria in the Radiological Environmental Monitoring Program (REMP);

4. A sample of on-site groundwater or surface water, which is hydrologically connected to a current or future source of drinking water, exceeds the reporting criteria in the REMP.

B. When communicating with State and Local officials, be clear and precise when quantifying the release and how it applies to regulatory criteria. Ensure the following items are included in the communication:

1. That the communication is being made as part of the NEI Enhanced Groundwater Protection Initiative;

2. Date and time of the spill, leak, or sample result;

3. Whether or not the spill or leak has been stopped;

4. Level and nature of the contaminant;

5. Location and volume of the spill/leak if known, or sample result location, as applicable;

6. Source, if known;

7. Actions taken and related sample results to date; and

8. Potential or bounding annual dose to a member of the public; if applicable.

C. Following communication with State/Local officials, complete a 4-hour 10CFR50.72 NRC notification.

2.5 Record Retention

2.5.1 The following records ***SHALL*** be maintained in accordance with FP-G-RM-01 (RECORDS MANAGEMENT) for the life of the corporation plus 10 years:

A. Periodic checks, inspections, tests and calibrations of components and systems as related to the specifications and treatment systems defined in the ODCM.

B. Records of wind speed and direction.

C. Records of reviews performed for changes made to the Offsite Dose Calculation Manual.

D. Liquid and gaseous radioactive releases to the environs.

E. Off-site environmental surveys

F. Radioactive shipments

OFFSITE DOSE CALCULATION MANUAL - TABLE OF CONTENTS

SECTION		PAGE
1.0	RECORD OF REVISION	2
2.0	SUMMARY OF DISPERSION CALCULATION PROCEDURES	3
2.1	References	4
Table 1	Monticello Release Conditions	5
Table 2	Distances to Controlling Unrestricted Area Boundary Locations	6
Table 3	Monticello Reactor Vent Dispersion Parameters for Long Term Mixed Mode Releases >500 Hrs /Yr or >150 Hrs / Qtr	7
Table 4	Monticello Reactor Vent Dispersion Parameters for Long Term Mixed Mode Releases >500 Hrs/Yr or >150 Hrs/Qtr	8
Table 5	Monticello Reactor Vent Dispersion Parameters for Long Term Mixed Mode Releases >500 Hrs/Yr or >150 Hrs/Qtr	16
Table 6	Monticello Offgas Stack Dispersion Parameters for Long Term Elevated Releases >500 Hrs/Yr or >150 Hrs/Qtr	24
Table 7	Monticello Offgas Stack Dispersion Parameters for Long Term Elevated Releases >500 Hrs/Yr or >150 Hrs/Qtr	25
Table 8	Monticello Offgas Stack Dispersion Parameters for Long Term Elevated Releases >500 Hrs/Yr or >150 Hrs/Qtr	33
Table 9	Monticello Offgas Stack Dispersion Parameters for Short Term Elevated Releases ≤500 Hrs/Yr or ≤150 Hrs/Qtr	41
Table 10	Monticello Offgas Stack Dispersion Parameters for Short Term Elevated Releases ≤500 Hrs/Yr or ≤150 Hrs/Qtr	42
Table 11	Monticello Offgas Stack Dispersion Parameters for Short Term Elevated Releases ≤500 HrsYr or ≤150 Hrs/Qtr	50
Table 12	Monticello Reactor Building Vent Dispersion Parameters for Short Term Elevated Releases ≤500 Hrs/Yr or ≤150 Hrs/Qtr	58
Table 13	Reactor Building Vent Dispersion Parameters for Short Term Elevated Releases ≤500 Hrs/Yr or ≤150 Hrs/Qtr	59
Table 14	Reactor Building Vent Dispersion Parameters for Short Term Elevated Releases ≤500 Hrs/Yr or ≤150 Hrs/Qtr	67

Prepared By:	
Reviewed By:	
OC Final Review Meeting:	Date:
Approved By Plant Manager:	Date:

FOR ADMINISTRATIVE USE ONLY			
3087 (DOCUMENT CHANGE, HOLD, AND COMMENT FORM) incorporated:_____			
Resp Supv: CHEM	Assoc Ref: CHEM-I	SR: N	Freq: 2 yrs
ARMS: ODCM-APP-A	Doc Type: 7030	Admin Initials:	Date:

l/plr

1.0 RECORD OF REVISION

Revision No.	Date	Reason for Revision
0	October - 2000	Moved previous ODCM-06.01 tables into this Appendix to make the ODCM easier to use.

2.0 SUMMARY OF DISPERSION CALCULATION PROCEDURES

Updepleted, undecayed dispersion parameters were computed using the computer program XOQDOQ (Sagendorf and Goll, 1977). Specifically, sector average χ/Q and D/Q values were obtained for a sector width of 22.5 degrees. Credit was taken for momentum plume rise and effective plume height was adjusted for local terrain height for elevated releases. Building wake corrections were used to adjust calculations for ground-level releases. Standard open terrain recirculation correction factors were also applied as available as default values in XOQDOQ.

Dispersion calculations were based on mixed mode releases for the reactor vent and on elevated releases for the offgas stack. A summary of release conditions used as input to XOQDOQ is presented in Table 1 and controlling site boundary distances are defined in Table 2. Computed χ/Q and D/Q values for unrestricted area boundary locations (relative to release points) and for standard distances (to five miles from the source in 0.1 mile increments) are presented in Tables 3 through 11.

For certain meteorological and release conditions, the enveloping interpolation routines in XOQDOQ used to compute short-term χ/Q and D/Q values do not provide reasonable results. Because of this, results were reviewed for consistency and where possible, the distributions of calculated χ/Q values were enveloped and interpolated by hand.

In some cases, use of the NRC methodology is implemented in XOQDOQ for estimating short term dispersion values results in values which are lower than the annual values. For these cases, the annual average χ/Q and D/Q values are used to conservatively represent short-term values. χ/Q and D/Q values for on-site EPA locations were adjusted (multiplied by a factor of 0.238) to account for limited daily exposure of workers in accordance with NUREG-0473[2].

On-site meteorological data for the period September 1, 1976 through August 31,1978 (as presented in Appendix B) were used as input to XOQDOQ. Data were collected and ΔT stability classes were defined in conformance with NRC Regulatory Guide 1.23[3]. Dispersion calculations for the reactor vent were based on $\Delta T_{42.7\text{-}10m}$ and 10 meter wind data (joint data recovery of 94 percent). Dispersion calculations for the offgas stack were based on $\Delta T_{100\text{-}10m}$ and 100 meter wind data (joint data recovery of 95 percent).

2.1 References

1. Sagendorf, J. F. and Goll, J. T., XOQDOQ Program for the Evaluation of Routine Effluent Releases at Nuclear Power Stations. NUREG 0324, U.S. Nuclear Regulatory Commission, September 1977.

2. NUREG-0473

3. USNRC Regulatory Guide 1.23

Table 1 Monticello Release Conditions

	Reactor Vent	Off-Gas Stack
Release Type	Mixed mode (Long and short-term)	Elevated (Long and short-term)
Release point height, m	42	100
Adjacent building height, m	42	42
Relative location to adjacent structures	Adjacent to Turbine Building	400′ SE of Reactor Building
Exit velocity, m/Sec	6.1	19.0
Internal stack diameter, m	2.41	0.36
Building cross-sectional area*, m^2	1480	N/A
Purge frequency**, times per year	6	6
Purge duration**, hours/release	24	24

* Applied to ground level releases.

** Applied to short-term calculations only.

Table 2 Distances to Controlling Unrestricted Area Boundary Locations

Miles

Column 1 As measured from Reactor Vent		Column 2* As Measured from Offgas Stack	
Sector	Distance	Sector	Distance
N	0.51	N	0.59
NNE	0.58	N	0.63
NE	0.65	NNE	0.65
ENE	0.83	ENE	0.78
E	0.59	E	0.50
ESE	0.59	E	0.50
SE	0.61	SSE	0.51
SSE	0.43	S	0.36
S	0.34	SSW	0.31
SSW	0.32	SW	0.33
SW	0.32	SW	0.33
WSW	0.35	WSW	0.38
W	0.48	W	0.56
WNW	0.68	NW	0.78
NW	0.43	NW	0.53
NNW	0.53	NNW	0.61

* Locations specified in Column 2 are the same geographic points as specified in Column 1 although the reference points are different.

Table 3 Monticello Reactor Vent Dispersion Parameters for Long Term Mixed Mode Releases >500 Hrs /Yr or >150 Hrs / Qtr

Site Boundary Sector*	χ/Q (sec/m^3)	D/Q (m^{-2})
N	2.09E-06	2.89E-08
NNE	1.29E-06	1.82E-08
NE	7.76E-07	9.42E-09
ENE	6.11E-07	5.62E-09
E	1.38E-06	1.45E-08
ESE	2.42E-06	3.15E-08
SE	2.53E-06	3.30E-08
SSE	4.08E-06	5.95E-08
S	2.30E-06	3.08E-08
SSW	1.80E-06	2.13E-08
SW	1.96E-06	2.54E-08
WSW	1.54E-06	1.72E-08
W	1.10E-06	1.23E-08
WNW	1.22E-06	1.19E-08
NW	2.11E-06	2.61E-08
NNW	1.87E-06	2.55E-08

Period of record: 9-1-76 to 8-31-78

* Measured relevant to the Reactor Vent.

Table 4 Monticello Reactor Vent Dispersion Parameters for Long Term Mixed Mode Releases >500 Hrs/Yr or >150 Hrs/Qtr

For Standard Distances (As Measured from the Reactor Vent) (χ/Q), sec/m^3

Miles

Sector*	0.1	0.2	0.3	0.4	0.5	0.6	0.7
N	2.94E-05	8.91E-06	4.59E-06	2.98E-06	2.17E-06	1.74E-06	1.46E-06
NNE	1.98E-05	6.24E-06	3.25E-06	2.11E-06	1.55E-06	1.25E-06	1.06E-06
NE	1.22E-05	3.84E-06	2.02E-06	1.33E-06	9.98E-07	8.21E-07	7.09E-07
ENE	1.25E-05	3.91E-06	2.05E-06	1.35E-06	1.01E-06	8.46E-07	7.44E-07
E	1.97E-05	6.02E-06	3.20E-06	2.16E-06	1.64E-06	1.36E-06	1.19E-06
ESE	3.48E-05	1.05E-05	5.71E-06	3.89E-06	2.94E-06	2.40E-06	2.04E-06
SE	3.91E-05	1.17E-05	6.34E-06	4.28E-06	3.20E-06	2.57E-06	2.15E-06
SSE	4.15E-05	1.26E-05	6.78E-06	4.52E-06	3.35E-06	2.70E-06	2.28E-06
S	1.60E-05	4.95E-06	2.69E-06	1.82E-06	1.39E-06	1.16E-06	1.02E-06
SSW	1.14E-05	3.54E-06	1.97E-06	1.39E-06	1.11E-06	9.79E-07	8.94E-07
SW	1.28E-05	3.85E-06	2.15E-06	1.51E-06	1.21E-06	1.06E-06	9.58E-07
WSW	1.08E-05	3.29E-06	1.85E-06	1.32E-06	1.06E-06	9.52E-07	8.89E-07
W	1.21E-05	3.73E-06	2.01E-06	1.37E-06	1.07E-06	9.24E-07	8.42E-07
WNW	1.96E-05	6.01E-06	3.24E-06	2.17E-06	1.64E-06	1.37E-06	1.19E-06
NW	2.15E-05	6.49E-06	3.45E-06	2.32E-06	1.76E-06	1.45E-06	1.25E-06
NNW	2.71E-05	8.24E-06	4.24E-06	2.74E-06	2.00E-06	1.61E-06	1.36E-06

Period of Record: 9-1-76 to 8-31-78

* Measured relevant to the Reactor Vent.

Table 4 Monticello Reactor Vent Dispersion Parameters for Long Term Mixed Mode Releases >500 Hrs/Yr or >150 Hrs/Qtr (cont'd)

For Standard Distances (As Measured from the Reactor Vent) (χ/Q), sec/m^3

Miles

Sector*	0.8	0.9	1.0	1.1	1.2	1.3	1.4
N	1.21E-06	9.77E-07	8.18E-07	7.00E-07	6.10E-07	5.39E-07	4.82E-07
NNE	8.85E-07	7.19E-07	6.07E-07	5.24E-07	4.59E-07	4.08E-07	3.66E-07
NE	6.02E-07	4.94E-07	4.19E-07	3.61E-07	3.16E-07	2.80E-07	2.50E-07
ENE	6.46E-07	5.41E-07	4.69E-07	4.13E-07	3.69E-07	3.32E-07	3.02E-07
E	1.02E-06	8.42E-07	7.16E-07	6.20E-07	5.45E-07	4.85E-07	4.35E-07
ESE	1.69E-06	1.35E-06	1.11E-06	9.35E-07	7.99E-07	6.92E-07	6.06E-07
SE	1.76E-06	1.39E-06	1.13E-06	9.46E-07	8.03E-07	6.93E-07	6.04E-07
SSE	1.89E-06	1.51E-06	1.25E-06	1.06E-06	9.14E-07	7.98E-07	7.06E-07
S	8.69E-07	7.17E-07	6.09E-07	5.27E-07	4.63E-07	4.12E-07	3.71E-07
SSW	7.94E-07	6.74E-07	5.85E-07	5.14E-07	4.57E-07	4.10E-07	3.70E-07
SW	8.43E-07	7.09E-07	6.09E-07	5.31E-07	4.68E-07	4.16E-07	3.73E-07
WSW	8.07E-07	6.97E-07	6.12E-07	5.44E-07	4.87E-07	4.39E-07	3.99E-07
W	7.50E-07	6.40E-07	5.59E-07	4.95E-07	4.42E-07	3.99E-07	3.63E-07
WNW	1.02E-06	8.42E-07	7.17E-07	6.22E-07	5.47E-07	4.87E-07	4.38E-07
NW	1.05E-06	8.55E-07	7.15E-07	6.10E-07	5.29E-07	4.64E-07	4.11E-07
NNW	1.13E-06	9.14E-07	7.68E-07	6.60E-07	5.76E-07	5.10E-07	4.57E-07

Period of Record: 9-1-76 to 8-31-78

* Measured relevant to the Reactor Vent.

Table 4 Monticello Reactor Vent Dispersion Parameters for Long Term Mixed Mode Releases >500 Hrs/Yr or >150 Hrs/Qtr (cont'd)

For Standard Distances (As Measured from the Reactor Vent) (χ/Q), sec/m^3

Miles

Sector*	1.5	1.6	1.7	1.8	1.9	2.0	2.1
N	4.35E-07	3.91E-07	3.54E-07	3.23E-07	2.96E-07	2.72E-07	2.52E-07
NNE	3.32E-07	3.00E-07	2.72E-07	2.49E-07	2.28E-07	2.11E-07	1.95E-07
NE	2.25E-07	2.07E-07	1.92E-07	1.78E-07	1.67E-07	1.57E-07	1.48E-07
ENE	2.77E-07	2.56E-07	2.37E-07	2.21E-07	2.07E-07	1.94E-07	1.83E-07
E	3.94E-07	3.57E-07	3.25E-07	2.97E-07	2.73E-07	2.53E-07	2.34E-07
ESE	5.36E-07	4.78E-07	4.29E-07	3.88E-07	3.53E-07	3.23E-07	2.97E-07
SE	5.33E-07	4.80E-07	4.35E-07	3.97E-07	3.65E-07	3.37E-07	3.12E-07
SSE	6.31E-07	5.63E-07	5.05E-07	4.57E-07	4.16E-07	3.80E-07	3.49E-07
S	3.36E-07	3.03E-07	2.74E-07	2.49E-07	2.28E-07	2.10E-07	1.94E-07
SSW	3.37E-07	3.20E-07	3.05E-07	2.92E-07	2.81E-07	2.71E-07	2.62E-07
SW	3.37E-07	3.17E-07	2.99E-07	2.83E-07	2.70E-07	2.58E-07	2.47E-07
WSW	3.64E-07	3.44E-07	3.26E-07	3.10E-07	2.95E-07	2.82E-07	2.71E-07
W	3.32E-07	3.16E-07	3.01E-07	2.89E-07	2.78E-07	2.69E-07	2.61E-07
WNW	3.97E-07	3.74E-07	3.54E-07	3.37E-07	3.23E-07	3.12E-07	3.02E-07
NW	3.68E-07	3.33E-07	3.03E-07	2.78E-07	2.57E-07	2.38E-07	2.21E-07
NNW	4.13E-07	3.73E-07	3.39E-07	3.10E-07	2.85E-07	2.63E-07	2.44E-07

Period of Record: 9-1-76 to 8-31-78

* Measured relevant to the Reactor Vent.

Table 4 Monticello Reactor Vent Dispersion Parameters for Long Term Mixed Mode Releases >500 Hrs/Yr or >150 Hrs/Qtr (cont'd)

For Standard Distances (As Measured from the Reactor Vent) (χ/Q), sec/m^3

Miles

Sector*	2.2	2.3	2.4	2.5	2.6	2.7	2.8
N	2.34E-07	2.18E-07	2.04E-07	1.92E-07	1.83E-07	1.75E-07	1.68E-07
NNE	1.82E-07	1.70E-07	1.59E-07	1.50E-07	1.41E-07	1.33E-07	1.26E-07
NE	1.40E-07	1.32E-07	1.26E-07	1.20E-07	1.13E-07	1.07E-07	1.02E-07
ENE	1.73E-07	1.64E-07	1.56E-07	1.49E-07	1.41E-07	1.34E-07	1.27E-07
E	2.18E-07	2.04E-07	1.91E-07	1.80E-07	1.69E-07	1.60E-07	1.51E-07
ESE	2.74E-07	2.53E-07	2.36E-07	2.20E-07	2.05E-07	1.93E-07	1.81E-07
SE	2.91E-07	2.73E-07	2.56E-07	2.41E-07	2.26E-07	2.12E-07	1.99E-07
SSE	2.22E-07	2.99E-07	2.78E-07	2.59E-07	2.43E-07	2.29E-07	2.15E-07
S	1.80E-07	1.68E-07	1.57E-07	1.47E-07	1.42E-07	1.37E-07	1.33E-07
SSW	2.55E-07	2.48E-07	2.41E-07	2.35E-07	2.20E-07	2.06E-07	1.94E-07
SW	2.38E-07	2.30E-07	2.22E-07	2.15E-07	2.04E-07	1.93E-07	1.83E-07
WSW	2.60E-07	2.51E-07	2.42E-07	2.34E-07	2.18E-07	2.04E-07	1.92E-07
W	2.54E-07	2.48E-07	2.42E-07	2.37E-07	2.25E-07	2.14E-07	2.04E-07
WNW	2.93E-07	2.85E-07	2.79E-07	2.73E-07	2.64E-07	2.55E-07	2.47E-07
NW	2.07E-07	1.94E-07	1.82E-07	1.72E-07	1.66E-07	1.60E-07	1.55E-07
NNW	2.28E-07	2.13E-07	2.00E-07	1.88E-07	1.78E-07	1.68E-07	1.60E-07

Period of Record: 9-1-76 to 8-31-78

* Measured relevant to the Reactor Vent.

Table 4 Monticello Reactor Vent Dispersion Parameters for Long Term Mixed Mode Releases >500 Hrs/Yr or >150 Hrs/Qtr (cont'd)

For Standard Distances (As Measured from the Reactor Vent) (χ/Q), sec/m^3

Sector*	Miles 2.9	3.0	3.1	3.2	3.3	3.4	3.5
N	1.62E-07	1.56E-07	1.51E-07	1.46E-07	1.41E-07	1.37E-07	1.33E-07
NNE	1.20E-07	1.14E-07	1.09E-07	1.04E-07	9.91E-08	9.49E-08	9.10E-08
NE	9.64E-08	9.16E-08	8.73E-08	8.33E-07	7.96E-08	7.62E-08	7.30E-08
ENE	1.21E-07	1.16E-07	1.11E-07	1.06E-07	1.02E-07	9.75E-08	9.37E-08
E	1.44E-07	1.36E-07	1.30E-07	1.24E-07	1.18E-07	1.13E-07	1.09E-07
ESE	1.71E-07	1.61E-07	1.53E-07	1.45E-07	1.38E-07	1.31E-07	1.25E-07
SE	1.88E-07	1.77E-07	1.68E-07	1.59E-07	1.51E-07	1.44E-07	1.37E-07
SSE	2.04E-07	1.93E-07	1.83E-07	1.74E-07	1.66E-07	1.58E-07	1.51E-07
S	1.29E-07	1.26E-07	1.22E-07	1.19E-07	1.17E-07	1.14E-07	1.12E-07
SSW	1.83E-07	1.73E-07	1.63E-07	1.55E-07	1.47E-07	1.40E-07	1.33E-07
SW	1.75E-07	1.67E-07	1.59E-07	1.52E-07	1.46E-07	1.40E-07	1.34E-07
WSW	1.80E-07	1.70E-07	1.60E-07	1.52E-07	1.44E-07	1.37E-07	1.30E-07
W	1.95E-07	1.87E-07	1.79E-07	1.72E-07	1.65E-07	1.59E-07	1.53E-07
WNW	2.40E-07	2.33E-07	2.26E-07	2.19E-07	2.13E-07	2.07E-07	2.01E-07
NW	1.50E-07	1.46E-07	1.42E-07	1.39E-07	1.36E-07	1.33E-07	1.31E-07
NNW	1.52E-07	1.45E-07	1.38E-07	1.32E-07	1.26E-07	1.21E-07	1.17E-07

Period of Record: 9-1-76 to 8-31-78

* Measured relevant to the Reactor Vent.

Table 4 Monticello Reactor Vent Dispersion Parameters for Long Term Mixed Mode Releases >500 Hrs/Yr or >150 Hrs/Qtr (cont'd)

For Standard Distances (As Measured from the Reactor Vent) (χ/Q), sec/m^3

Miles

Sector*	3.6	3.7	3.8	3.9	4.0	4.1	4.2
N	1.28E-07	1.23E-07	1.18E-07	1.14E-07	1.10E-07	1.06E-07	1.02E-07
NNE	8.74E-08	8.40E-08	8.09E-08	7.80E-08	7.52E-08	7.26E-08	7.02E-08
NE	7.01E-08	6.74E-08	6.48E-08	6.24E-08	6.02E-08	5.81E-08	5.61E-08
ENE	9.02E-08	8.69E-08	8.38E-08	8.10E-08	7.82E-08	7.57E-08	7.33E-08
E	1.04E-07	1.00E-07	9.62E-08	9.26E-08	8.92E-08	8.61E-08	8.31E-08
ESE	1.19E-07	1.14E-07	1.09E-07	1.05E-07	1.01E-07	9.66E-07	9.29E-08
SE	1.31E-07	1.25E-07	1.20E-07	1.15E-07	1.10E-07	1.06E-07	1.02E-07
SSE	1.45E-07	1.40E-07	1.36E-07	1.31E-07	1.27E-07	1.23E-07	1.19E-07
S	1.08E-07	1.05E-07	1.02E-07	9.95E-08	9.69E-08	9.44E-08	9.20E-08
SSW	1.29E-07	1.25E-07	1.21E-07	1.17E-07	1.13E-07	1.10E-07	1.07E-07
SW	1.31E-07	1.27E-07	1.24E-07	1.20E-07	1.17E-07	1.14E-07	1.11E-07
WSW	1.27E-07	1.23E-07	1.20E-07	1.17E-07	1.14E-07	1.11E-07	1.09E-07
W	1.46E-07	1.39E-07	1.33E-07	1.28E-07	1.22E-07	1.17E-07	1.13E-07
WNW	1.91E-07	1.82E-07	1.74E-07	1.66E-07	1.59E-07	1.52E-07	1.46E-07
NW	1.26E-07	1.23E-07	1.19E-07	1.16E-07	1.13E-07	1.10E-07	1.07E-07
NNW	1.12E-07	1.08E-07	1.04E-07	1.01E-07	9.73E-08	9.41E-08	9.11E-08

Period of Record: 9-1-76 to 8-31-78

* Measured relevant to the Reactor Vent.

Table 4 Monticello Reactor Vent Dispersion Parameters for Long Term Mixed Mode Releases >500 Hrs/Yr or >150 Hrs/Qtr (cont'd)

For Standard Distances (As Measured from the Reactor Vent) (χ/Q), sec/m^3

Miles

Sector*	4.3	4.4	4.5	4.6	4.7	4.8	4.9
N	9.86E-08	9.54E-08	9.23E-08	8.95E-08	8.68E-08	8.42E-08	8.18E-08
NNE	6.79E-08	6.57E-08	6.37E-08	6.18E-08	6.00E-08	5.83E-08	5.66E-08
NE	5.43E-08	5.25E-08	5.09E-08	4.93E-08	4.78E-08	4.65E-08	4.51E-08
ENE	7.10E-08	6.89E-08	6.68E-08	6.49E-08	6.31E-08	6.14E-08	5.97E-08
E	8.09E-08	7.77E-08	7.53E-08	7.29E-08	7.07E-08	6.87E-08	6.67E-08
ESE	8.05E-08	8.63E-08	8.33E-08	8.04E-08	7.78E-08	7.52E-08	7.28E-08
SE	9.84E-08	9.48E-08	9.15E-08	8.84E-08	8.55E-08	8.27E-08	8.01E-08
SSE	1.16E-07	1.13E-07	1.10E-07	1.06E-07	1.03E-07	9.92E-08	9.61E-08
S	8.98E-08	8.77E-08	8.57E-08	8.28E-08	8.00E-08	7.74E-08	7.50E-08
SSW	1.04E-07	1.01E-07	9.84E-08	9.49E-08	9.16E-08	8.85E-08	8.55E-08
SW	1.08E-07	1.05E-07	1.02E-07	9.82E-08	9.46E-08	9.12E-08	8.79E-08
WSW	1.06E-07	1.03E-07	1.01E-07	9.72E-08	9.36E-08	9.03E-08	8.72E-08
W	1.08E-07	1.04E-07	1.00E-07	9.69E-08	9.36E-08	9.04E-08	8.74E-08
WNW	1.40E-07	1.35E-07	1.30E-07	1.25E-07	1.20E-07	1.16E-07	1.12E-07
NW	1.04E-07	1.02E-07	9.92E-08	9.58E-08	9.26E-08	8.95E-08	8.67E-08
NNW	8.83E-08	8.57E-08	8.32E-08	8.07E-08	7.82E-08	7.60E-08	7.38E-08

Period of Record: 9-1-76 to 8-31-78

* Measured relevant to the Reactor Vent.

Table 4 Monticello Reactor Vent Dispersion Parameters for Long Term Mixed Mode Releases >500 Hrs/Yr or >150 Hrs/Qtr (cont'd)

For Standard Distances (As Measured from the Reactor Vent) (χ/Q), sec/m^3

Sector*	Miles 5.0
N	7.94E-08
NNE	5.51E-08
NE	4.39E-08
ENE	5.82E-08
E	6.48E-08
ESE	7.06E-08
SE	7.76E-08
SSE	9.31E-08
S	7.26E-08
SSW	8.28E-08
SW	8.49E-08
WSW	8.42E-08
W	8.46E-08
WNW	1.08E-07
NW	8.40E-08
NNW	7.18E-08

Period of Record: 9-1-76 to 8-31-78

* Measured relevant to the Reactor Vent.

Table 5 Monticello Reactor Vent Dispersion Parameters for Long Term Mixed Mode Releases >500 Hrs/Yr or >150 Hrs/Qtr

For Standard Distances (As Measured from the Reactor Vent) (D/Q), /m²

Miles

Sector*	0.1	0.2	0.3	0.4	0.5	0.6	0.7
N	2.75E-07	1.10E-07	6.31E-08	4.18E-08	3.01E-08	2.28E-08	1.80E-08
NNE	1.89E-07	7.89E-08	4.70E-08	3.17E-08	2.30E-08	1.74E-08	1.37E-08
NE	1.11E-07	4.68E-08	2.81E-08	1.91E-08	1.39E-08	1.06E-08	8.41E-09
ENE	1.03E-07	4.32E-08	2.61E-08	1.78E-08	1.31E-08	1.00E-08	7.94E-09
E	1.58E-07	6.46E-08	3.08E-08	2.56E-08	1.87E-08	1.42E-08	1.13E-08
ESE	3.79E-07	1.49E-07	8.53E-08	5.66E-08	4.09E-08	3.11E-08	2.46E-08
SE	4.31E-07	1.67E-07	9.41E-08	6.19E-08	4.43E-08	3.36E-08	2.65E-08
SSE	4.49E-07	1.77E-07	1.01E-07	6.65E-08	4.78E-08	3.62E-08	2.86E-08
S	1.47E-07	6.03E-08	3.58E-08	2.43E-08	1.79E-08	1.38E-08	1.10E-08
SSW	9.22E-08	3.85E-08	2.33E-08	1.62E-08	1.21E-08	9.50E-09	7.72E-09
SW	1.21E-07	4.80E-08	2.79E-08	1.90E-08	1.41E-08	1.10E-08	8.89E-09
WSW	8.33E-08	3.44E-08	2.07E-08	1.44E-08	1.09E-08	8.57E-09	7.01E-09
W	9.09E-08	3.80E-08	2.29E-08	1.58E-08	1.18E-08	9.18E-09	7.41E-09
WNW	1.51E-07	6.14E-08	3.65E-08	2.49E-08	1.83E-08	1.41E-08	1.13E-08
NW	1.86E-07	7.43E-08	4.30E-08	2.89E-08	2.11E-08	1.62E-08	1.29E-08
NNW	2.45E-07	9.85E-08	5.73E-08	3.82E-08	2.76E-08	2.10E-08	1.66E-08

Period of Record: 9-1-76 to 8-31-78

* Measured relevant to the Reactor Vent.

Table 5 Monticello Reactor Vent Dispersion Parameters for Long Term Mixed Mode Releases >500 Hrs/Yr or >150 Hrs/Qtr (cont'd)

For Standard Distances (As Measured from the Reactor Vent) (D/Q), /m²

Miles

Sector*	0.8	0.9	1.0	1.1	1.2	1.3	1.4
N	1.38E-08	1.02E-08	7.88E-09	6.23E-09	5.03E-09	4.14E-09	3.55E-09
NNE	1.05E-08	7.83E-09	6.02E-09	4.76E-09	3.85E-09	3.17E-09	2.72E-09
NE	6.48E-09	4.84E-09	3.74E-09	2.96E-09	2.40E-09	1.98E-09	1.66E-09
ENE	6.14E-09	4.60E-09	3.56E-09	2.83E-09	2.30E-09	1.90E-09	1.60E-09
E	8.71E-09	6.51E-09	5.04E-09	4.00E-09	3.24E-09	2.68E-09	2.24E-09
ESE	1.89E-08	1.41E-09	1.09E-08	8.64E-09	7.00E-09	5.77E-09	4.83E-09
SE	2.03E-08	1.51E-08	1.17E-08	9.22E-09	7.45E-09	6.14E-09	5.13E-09
SSE	2.19E-08	1.63E-08	1.26E-08	9.93E-09	8.03E-09	6.61E-09	5.75E-09
S	8.57E-09	6.44E-09	5.01E-09	3.99E-09	3.46E-09	2.85E-09	2.38E-09
SSW	6.08E-09	4.63E-09	3.63E-09	2.92E-09	2.39E-09	2.09E-09	1.76E-09
SW	6.99E-09	5.31E-09	4.16E-09	3.34E-09	2.73E-09	2.41E-09	2.02E-09
WSW	5.56E-09	4.86E-09	3.36E-09	2.71E-09	2.23E-09	1.86E-09	1.63E-09
W	5.81E-09	4.41E-09	3.45E-09	2.77E-09	2.27E-09	1.89E-09	1.65E-09
WNW	8.82E-09	7.50E-09	5.17E-09	4.13E-09	3.76E-09	2.79E-09	2.48E-09
NW	9.99E-09	7.50E-09	5.82E-09	4.63E-09	3.76E-09	3.11E-09	2.61E-09
NNW	1.27E-08	9.47E-09	7.30E-09	5.78E-09	4.67E-09	3.85E-09	3.32E-09

Period of Record: 9-1-76 to 8-31-78

* Measured relevant to the Reactor Vent.

Table 5 Monticello Reactor Vent Dispersion Parameters for Long Term Mixed Mode Releases >500 Hrs/Yr or >150 Hrs/Qtr (cont'd)

For Standard Distances (As Measured from the Reactor Vent) (D/Q), /m²

Miles

Sector*	1.5	1.6	1.7	1.8	1.9	2.0	2.1
N	3.00E-09	2.57E-09	2.22E-09	1.93E-09	1.70E-09	1.51E-09	1.34E-09
NNE	2.30E-09	1.97E-09	1.71E-09	1.49E-09	1.31E-09	1.16E-09	1.04E-09
NE	1.41E-09	1.21E-09	1.05E-09	9.18E-10	8.12E-10	7.20E-10	6.44E-10
ENE	1.36E-09	1.17E-09	1.01E-09	8.84E-10	7.81E-10	6.94E-10	6.20E-10
E	1.91E-09	1.64E-09	1.42E-09	1.24E-09	1.09E-09	9.71E-10	8.67E-10
ESE	4.09E-09	3.51E-09	3.04E-09	2.65E-09	2.34E-09	2.07E-09	1.85E-09
SE	4.34E-09	3.72E-09	3.22E-09	2.81E-09	2.48E-09	2.19E-09	1.96E-09
SSE	4.86E-09	4.16E-09	3.59E-09	3.13E-09	2.75E-09	2.43E-09	2.17E-09
S	2.03E-09	1.74E-09	1.50E-09	1.31E-09	1.16E-09	1.02E-09	9.13E-10
SSW	1.50E-09	1.33E-09	1.15E-09	1.01E-09	9.52E-10	8.43E-10	7.52E-10
SW	1.72E-09	1.52E-09	1.32E-09	1.15E-09	1.08E-09	9.53E-10	8.49E-10
WSW	1.39E-09	1.25E-09	1.09E-09	9.54E-10	9.16E-10	8.11E-10	7.23E-10
W	1.40E-09	1.24E-09	1.08E-09	9.44E-10	8.93E-10	7.91E-10	7.05E-10
WNW	2.10E-09	1.84E-09	1.59E-09	1.39E-09	1.28E-09	1.13E-09	1.01E-09
NW	2.22E-09	1.91E-09	1.65E-09	1.45E-09	1.28E-09	1.13E-09	1.01E-09
NNW	2.81E-09	2.40E-09	2.08E-09	1.81E-09	1.59E-09	1.42E-09	1.27E-09

Period of Record: 9-1-76 to 8-31-78

* Measured relevant to the Reactor Vent.

Table 5 Monticello Reactor Vent Dispersion Parameters for Long Term Mixed Mode Releases >500 Hrs/Yr or >150 Hrs/Qtr (cont'd)

For Standard Distances (As Measured from the Reactor Vent) (D/Q), /m²

Miles

Sector*	2.2	2.3	2.4	2.5	2.6	2.7	2.8
N	1.21E-09	1.09E-09	9.85E-10	8.97E-10	8.29E-10	7.64E-10	7.05E-10
NNE	9.29E-10	8.38E-10	7.60E-10	6.92E-10	6.33E-10	5.81E-10	5.35E-10
NE	5.78E-10	5.23E-10	4.83E-10	4.40E-10	4.03E-10	3.70E-10	3.41E-10
ENE	5.70E-10	5.14E-10	4.67E-10	4.25E-10	3.89E-10	3.57E-10	3.29E-10
E	7.79E-10	7.03E-10	6.38E-10	5.82E-10	5.32E-10	4.89E-10	4.51E-10
ESE	1.66E-09	1.50E-09	1.36E-09	1.24E-09	1.13E-09	1.04E-09	9.56E-10
SE	1.81E-09	1.63E-09	1.47E-09	1.35E-09	1.23E-09	1.13E-09	1.04E-09
SSE	1.94E-09	1.75E-09	1.59E-09	1.44E-09	1.32E-09	1.21E-09	1.11E-09
S	8.91E-10	7.38E-10	6.69E-10	6.09E-10	5.59E-10	5.16E-10	4.76E-10
SSW	6.74E-10	6.08E-10	5.51E-10	5.02E-10	4.60E-10	4.22E-10	3.90E-10
SW	7.61E-10	6.86E-10	6.22E-10	5.66E-10	5.18E-10	4.75E-10	4.38E-10
WSW	6.49E-10	5.85E-10	5.30E-10	4.83E-10	4.42E-10	4.07E-10	3.75E-10
W	6.33E-10	5.71E-10	5.18E-10	4.72E-10	4.32E-10	3.98E-10	3.67E-10
WNW	9.02E-10	8.14E-10	7.38E-10	6.72E-10	6.15E-10	5.66E-10	5.22E-10
NW	9.09E-10	8.48E-10	7.69E-10	7.00E-10	6.48E-10	5.95E-10	5.52E-10
NNW	1.14E-09	1.03E-09	9.29E-10	8.46E-10	7.77E-10	7.14E-10	6.59E-10

Period of Record: 9-1-76 to 8-31-78

* Measured relevant to the Reactor Vent.

Table 5 Monticello Reactor Vent Dispersion Parameters for Long Term Mixed Mode Releases >500 Hrs/Yr or >150 Hrs/Qtr (cont'd)

For Standard Distances (As Measured from the Reactor Vent) (D/Q), /m²

Miles

Sector*	2.9	3.0	3.1	3.2	3.3	3.4	3.5
N	6.52E-10	6.09E-10	5.67E-10	5.30E-10	5.00E-10	4.71E-10	4.46E-10
NNE	4.95E-10	4.59E-10	4.26E-10	3.97E-10	3.71E-10	3.48E-10	3.27E-10
NE	3.15E-10	2.92E-10	2.72E-10	2.53E-10	2.37E-10	2.22E-10	2.08E-10
ENE	3.04E-10	2.82E-10	2.62E-10	2.44E-10	2.28E-10	2.14E-10	2.01E-10
E	4.16E-10	3.86E-10	3.59E-10	3.34E-10	3.12E-10	2.93E-10	2.75E-10
ESE	8.83E-10	8.18E-10	7.60E-10	7.08E-10	6.61E-10	6.19E-10	5.80E-10
SE	9.59E-10	8.88E-10	8.25E-10	7.68E-10	7.17E-10	6.71E-10	6.30E-10
SSE	1.03E-09	9.56E-10	8.89E-10	8.28E-10	7.73E-10	7.24E-10	6.79E-10
S	4.42E-10	4.12E-10	3.93E-10	3.68E-10	3.44E-10	3.24E-10	3.05E-10
SSW	3.61E-10	3.35E-10	3.13E-10	2.92E-10	2.74E-10	2.58E-10	2.43E-10
SW	4.05E-10	3.76E-10	3.50E-10	3.27E-10	3.06E-10	2.87E-10	2.71E-10
WSW	3.47E-10	3.23E-10	3.01E-10	2.81E-10	2.64E-10	2.48E-10	2.34E-10
W	3.40E-10	3.16E-10	2.95E-10	2.76E-10	2.60E-10	2.44E-10	2.31E-10
WNW	4.83E-10	4.49E-10	4.19E-10	3.91E-10	3.68E-10	3.90E-10	3.98E-10
NW	5.13E-10	4.78E-10	4.54E-10	4.25E-10	3.99E-10	3.75E-10	3.53E-10
NNW	6.10E-10	5.66E-10	5.27E-10	4.92E-10	4.61E-10	4.33E-10	4.08E-10

Period of Record: 9-1-76 to 8-31-78

* Measured relevant to the Reactor Vent.

Table 5 Monticello Reactor Vent Dispersion Parameters for Long Term Mixed Mode Releases >500 Hrs/Yr or >150 Hrs/Qtr (cont'd)

For Standard Distances (As Measured from the Reactor Vent) (D/Q), /m²

Miles

Sector*	3.6	3.7	3.8	3.9	4.0	4.1	4.2
N	4.22E-10	4.00E-10	3.80E-10	3.62E-10	3.45E-10	3.30E-10	3.16E-10
NNE	3.08E-10	2.90E-10	2.74E-10	2.59E-10	2.46E-10	2.34E-10	2.22E-10
NE	1.96E-10	1.87E-10	1.75E-10	1.65E-10	1.57E-10	1.49E-10	1.41E-10
ENE	1.89E-10	1.78E-10	1.68E-10	1.59E-10	1.51E-10	1.43E-10	1.36E-10
E	2.58E-10	2.43E-10	2.29E-10	2.17E-10	2.05E-10	1.95E-10	1.85E-10
ESE	5.45E-10	5.13E-10	4.84E-10	4.57E-10	4.33E-10	4.10E-10	3.89E-10
SE	5.93E-10	5.58E-10	5.27E-10	4.98E-10	4.72E-10	4.48E-10	4.26E-10
SSE	6.46E-10	6.09E-10	5.76E-10	5.55E-10	5.27E-10	5.02E-10	4.79E-10
S	2.88E-10	2.73E-10	2.59E-10	2.46E-10	2.35E-10	2.24E-10	2.14E-10
SSW	2.30E-10	2.18E-10	2.07E-10	1.97E-10	1.88E-10	1.80E-10	1.72E-10
SW	2.55E-10	2.42E-10	2.29E-10	2.18E-10	2.28E-10	2.33E-10	2.22E-10
WSW	2.21E-10	2.10E-10	1.99E-10	1.90E-10	1.81E-10	1.73E-10	1.66E-10
W	2.19E-10	2.08E-10	1.98E-10	1.88E-10	1.80E-10	1.72E-10	1.65E-10
WNW	3.75E-10	3.55E-10	3.36E-10	3.19E-10	3.04E-10	2.89E-10	2.76E-10
NW	3.34E-10	3.17E-10	3.01E-10	2.86E-10	2.73E-10	2.61E-10	2.50E-10
NNW	3.85E-10	3.64E-10	3.45E-10	3.28E-10	3.12E-10	3.04E-10	2.90E-10

Period of Record: 9-1-76 to 8-31-78

* Measured relevant to the Reactor Vent.

Table 5 Monticello Reactor Vent Dispersion Parameters for Long Term Mixed Mode Releases >500 Hrs/Yr or >150 Hrs/Qtr (cont'd)

For Standard Distances (As Measured from the Reactor Vent) (D/Q), /m²

Miles

Sector*	4.3	4.4	4.5	4.6	4.7	4.8	4.9
N	3.03E-10	2.91E-10	2.80E-10	2.70E-10	2.61E-10	2.52E-10	2.44E-10
NNE	2.12E-10	2.02E-10	1.93E-10	1.84E-10	1.76E-10	1.69E-10	1.62E-10
NE	1.35E-10	1.28E-10	1.23E-10	1.17E-10	1.12E-10	1.07E-10	1.03E-10
ENE	1.29E-10	1.23E-10	1.18E-10	1.12E-10	1.08E-10	1.03E-10	9.88E-11
E	1.76E-10	1.67E-10	1.59E-10	1.52E-10	1.45E-10	1.39E-10	1.33E-10
ESE	3.70E-10	3.52E-10	3.35E-10	3.20E-10	3.05E-10	2.92E-10	2.79E-10
SE	4.05E-10	3.87E-10	3.69E-10	3.53E-10	3.38E-10	3.24E-10	3.11E-10
SSE	4.61E-10	4.41E-10	4.26E-10	4.09E-10	3.94E-10	3.80E-10	3.66E-10
S	2.05E-10	1.97E-10	1.90E-10	1.83E-10	1.76E-10	1.70E-10	1.65E-10
SSW	1.65E-10	1.59E-10	1.53E-10	1.48E-10	1.43E-10	1.38E-10	1.34E-10
SW	2.42E-10	2.42E-10	2.41E-10	2.30E-10	2.20E-10	2.10E-10	2.01E-10
WSW	1.59E-10	1.53E-10	1.58E-10	1.52E-10	1.47E-10	1.42E-10	1.37E-10
W	1.59E-10	1.53E-10	1.48E-10	1.43E-10	1.38E-10	1.34E-10	1.30E-10
WNW	2.64E-10	2.53E-10	2.42E-10	2.33E-10	2.24E-10	2.16E-10	2.08E-10
NW	2.39E-10	2.30E-10	2.22E-10	2.14E-10	2.07E-10	2.00E-10	1.93E-10
NNW	2.78E-10	2.67E-10	2.57E-10	2.47E-10	2.38E-10	2.30E-10	2.22E-10

Period of Record: 9-1-76 to 8-31-78

* Measured relevant to the Reactor Vent.

Table 5 Monticello Reactor Vent Dispersion Parameters for Long Term Mixed Mode Releases >500 Hrs/Yr or >150 Hrs/Qtr (cont'd)

For Standard Distances (As Measured from the Reactor Vent) (D/Q), /m²

Sector*	Miles 5.0
N	2.36E-10
NNE	1.56E-10
NE	9.90E-11
ENE	9.49E-11
E	1.27E-10
ESE	2.68E-10
SE	2.99E-10
SSE	3.54E-10
S	1.60E-10
SSW	1.30E-10
SW	1.93E-10
WSW	1.33E-10
W	1.27E-10
WNW	2.01E-10
NW	1.87E-10
NNW	2.15E-10

Period of Record: 9-1-76 to 8-31-78

* Measured relevant to the Reactor Vent.

Table 6 Monticello Offgas Stack Dispersion Parameters for Long Term Elevated Releases >500 Hrs/Yr or >150 Hrs/Qtr

Site Boundary Sector*	χ/Q (Sec/m^3)	D/Q (m^{-2})
N	7.04E-08	4.51E-09
NNE	7.06E-08	4.30E-09
NE	1.00E-07	6.18E-09
ENE	6.20E-08	2.34E-09
E	4.46E-08	2.77E-09
ESE	5.28E-08	3.93E-09
SE	5.50E-08	4.98E-09
SSE	3.99E-08	4.20E-09
S	1.83E-08	2.63E-09
SSW	1.17E-08	1.46E-09
SW	1.17E-08	1.46E-09
WSW	1.34E-08	1.34E-09
W	3.42E-08	1.67E-09
WNW	7.22E-08	2.43E-09
NW	5.67E-08	2.82E-09
NNW	1.08E-07	5.80E-09

Period of record: 9-1-76 to 8-31-78.

* Measured relevant to the Reactor Vent.

Table 7 Monticello Offgas Stack Dispersion Parameters for Long Term Elevated Releases >500 Hrs/Yr or >150 Hrs/Qtr

For Standard Distances (As Measured from the Offgas Stack) (χ/Q), sec/m^3

Miles

Sector*	0.1	0.2	0.3	0.4	0.5	0.6	0.7
N	2.39E-11	4.33E-08	6.96E-08	7.18E-08	7.08E-08	7.05E-08	7.15E-08
NNE	3.93E-11	6.93E-08	1.04E-07	1.03E-07	1.02E-07	1.01E-07	9.96E-08
NE	1.15E-11	2.27E-08	4.42E-08	5.50E-08	6.09E-08	6.34E-08	6.46E-08
ENE	1.00E-11	1.96E-08	3.74E-08	4.75E-08	5.48E-08	5.94E-08	6.22E-08
E	3.09E-12	7.35E-09	2.33E-08	3.64E-08	4.44E-08	4.93E-08	5.30E-08
ESE	2.80E-12	7.63E-09	2.67E-08	4.30E-08	5.31E-08	5.99E-08	6.61E-08
SE	5.57E-12	1.31E-08	3.90E-08	5.97E-08	7.41E-08	8.66E-08	9.91E-08
SSE	6.56E-12	1.40E-08	3.27E-08	4.50E-08	5.37E-08	6.41E-08	7.81E-08
S	4.93E-12	1.23E-08	3.06E-08	4.42E-08	5.35E-08	6.15E-08	6.95E-08
SSW	1.62E-12	4.83E-09	1.73E-08	2.93E-08	3.77E-08	4.45E-08	5.11E-08
SW	5.96E-13	2.06E-09	9.62E-09	1.69E-08	2.21E-08	2.73E-08	3.37E-08
WSW	3.07E-13	1.30E-09	7.80E-09	1.43E-08	1.87E-08	2.33E-08	2.94E-08
W	1.87E-12	6.43E-09	1.74E-08	2.59E-08	3.15E-08	3.63E-08	4.14E-08
WNW	1.56E-12	5.49E-09	2.06E-08	3.41E-08	4.21E-08	4.76E-08	5.27E-08
NW	5.29E-12	1.20E-08	3.15E-08	4.53E-08	5.46E-08	6.24E-08	6.92E-08
NNW	3.03E-11	5.55E-08	9.01E-08	9.73E-08	1.02E-07	1.07E-07	1.11E-07

Period of Record: 9-1-76 to 8-31-78

* Measured relevant to the Offgas Stack.

Table 7 Monticello Offgas Stack Dispersion Parameters for Long Term Elevated Releases >500 Hrs/Yr or >150 Hrs/Qtr (cont'd)

For Standard Distances (As Measured from the Offgas Stack) (χ/Q), sec/m^3

Sector*	Miles 0.8	0.9	1.0	1.1	1.2	1.3	1.4
N	7.07E-08	6.72E-08	6.55E-08	6.42E-08	6.30E-08	6.18E-08	6.05E-08
NNE	9.48E-08	8.63E-08	8.08E-08	7.65E-08	7.29E-08	6.97E-08	6.67E-08
NE	6.26E-08	5.76E-08	5.41E-08	5.13E-08	4.89E-08	4.69E-08	4.50E-08
ENE	6.13E-08	5.70E-08	5.38E-08	5.12E-08	4.89E-08	4.67E-08	4.47E-08
E	5.36E-08	5.10E-08	4.91E-08	4.74E-08	4.58E-08	4.43E-08	4.27E-08
ESE	6.89E-08	6.75E-08	6.63E-08	6.51E-08	6.36E-08	6.19E-08	6.00E-08
SE	1.06E-07	1.05E-07	1.04E-07	1.02E-07	9.96E-08	9.66E-08	9.32E-08
SSE	9.01E-08	9.61E-08	1.01E-07	1.04E-07	1.06E-07	1.06E-07	1.05E-07
S	7.41E-08	7.41E-08	7.42E-08	7.39E-08	7.31E-08	7.19E-08	7.04E-08
SSW	5.49E-08	5.49E-08	5.49E-08	5.44E-08	5.37E-08	5.26E-08	5.13E-08
SW	3.88E-08	4.13E-08	4.31E-08	4.43E-08	4.49E-08	4.49E-08	4.45E-08
WSW	3.49E-08	3.82E-08	4.10E-08	4.32E-08	4.46E-08	4.55E-08	4.58E-08
W	4.50E-08	4.59E-08	4.69E-08	4.77E-08	4.80E-08	4.80E-08	4.77E-08
WNW	5.52E-08	5.45E-08	5.42E-08	5.39E-08	5.33E-08	5.26E-08	5.16E-08
NW	7.18E-08	6.96E-08	6.77E-08	6.59E-08	6.40E-08	6.21E-08	6.01E-08
NNW	1.08E-07	9.96E-08	9.36E-08	8.85E-08	8.40E-08	8.00E-08	7.63E-08

Period of Record: 9-1-76 to 8-31-78

* Measured relevant to the Offgas Stack.

Table 7 Monticello Offgas Stack Dispersion Parameters for Long Term Elevated Releases >500 Hrs/Yr or >150 Hrs/Qtr (cont'd)

For Standard Distances (As Measured from the Offgas Stack) (χ/Q), sec/m^3

Sector*	Miles 1.5	1.6	1.7	1.8	1.9	2.0	2.1
N	5.91E-08	5.66E-08	5.43E-08	5.20E-08	4.99E-08	4.78E-08	4.59E-08
NNE	6.40E-08	6.06E-08	5.74E-08	5.45E-08	5.17E-08	4.92E-08	4.69E-08
NE	4.33E-08	4.23E-08	4.14E-08	4.06E-08	3.96E-08	3.88E-08	3.79E-08
ENE	4.28E-08	4.10E-08	3.93E-08	3.77E-08	3.62E-08	3.47E-08	3.34E-08
E	4.12E-08	3.94E-08	3.76E-08	3.60E-08	3.44E-08	3.29E-08	3.15E-08
ESE	5.80E-08	5.59E-08	5.39E-08	5.18E-08	4.98E-08	4.78E-08	4.60E-08
SE	8.97E-08	8.77E-08	8.55E-08	8.32E-08	8.07E-08	7.83E-08	7.59E-08
SSE	1.04E-08	9.98E-08	9.58E-08	9.19E-08	8.80E-08	8.42E-08	8.06E-08
S	6.85E-08	6.54E-08	6.23E-08	5.93E-08	5.65E-08	5.39E-08	5.14E-08
SSW	4.99E-08	5.03E-08	5.04E-08	5.04E-08	5.02E-08	4.99E-08	4.95E-08
SW	4.37E-08	4.46E-08	4.51E-08	4.54E-08	4.55E-08	4.54E-08	4.52E-08
WSW	4.57E-08	4.71E-08	4.81E-08	4.88E-08	4.92E-08	4.94E-08	4.95E-08
W	4.71E-08	4.79E-08	4.85E-08	4.89E-08	4.90E-08	4.90E-08	4.89E-08
WNW	5.05E-08	5.10E-08	5.12E-08	5.13E-08	5.12E-08	5.11E-08	5.08E-08
NW	5.81E-08	5.64E-08	5.47E-08	5.30E-08	5.13E-08	4.97E-08	4.82E-08
NNW	7.29E-08	6.89E-08	6.52E-08	6.18E-08	5.87E-08	5.58E-08	5.31E-08

Period of Record: 9-1-76 to 8-31-7

* Measured relevant to the Offgas Stack.

Table 7 Monticello Offgas Stack Dispersion Parameters for Long Term Elevated Releases >500 Hrs/Yr or >150 Hrs/Qtr (cont'd)

For Standard Distances (As Measured from the Offgas Stack) (χ/Q), sec/m^3

Miles

Sector*	2.2	2.3	2.4	2.5	2.6	2.7	2.8
N	4.41E-08	4.23E-08	4.07E-08	3.92E-08	3.82E-08	3.73E-08	3.64E-08
NNE	4.48E-08	4.28E-08	4.09E-08	3.92E-08	3.76E-08	3.61E-08	3.47E-08
NE	3.71E-08	3.63E-08	3.53E-08	3.47E-08	3.35E-08	3.24E-08	3.13E-08
ENE	3.21E-08	3.09E-08	2.98E-08	2.87E-08	2.76E-08	2.65E-08	2.55E-08
E	3.02E-08	2.90E-08	2.78E-08	2.67E-08	2.57E-08	2.47E-08	2.38E-08
ESE	4.42E-08	4.25E-08	4.09E-08	3.94E-08	3.79E-08	3.66E-08	3.53E-08
SE	7.35E-08	7.12E-08	6.89E-08	6.68E-08	6.38E-08	6.11E-08	5.85E-08
SSE	7.72E-08	7.39E-08	7.08E-08	6.79E-08	6.53E-08	6.28E-08	6.05E-08
S	4.91E-08	4.69E-08	4.48E-08	4.29E-08	4.20E-08	4.11E-08	4.03E-08
SSW	4.90E-08	4.85E-08	4.79E-08	4.73E-08	4.51E-08	4.30E-08	4.11E-08
SW	4.49E-08	4.46E-08	4.42E-08	4.38E-08	4.23E-08	4.09E-08	3.96E-08
WSW	4.93E-08	4.91E-08	4.88E-08	4.84E-08	4.63E-08	4.42E-08	4.24E-08
W	4.86E-08	4.83E-08	4.79E-08	4.75E-08	4.59E-08	4.44E-08	4.30E-08
WNW	5.05E-08	5.01E-08	4.97E-08	4.93E-08	4.84E-08	4.75E-08	4.66E-08
NW	4.67E-08	4.52E-08	4.38E-08	4.25E-08	4.19E-08	4.14E-08	4.08E-08
NNW	5.06E-08	4.83E-08	4.62E-08	4.42E-08	4.24E-08	4.07E-08	3.91E-08

Period of Record: 9-1-76 to 8-31-78

* Measured relevant to the Offgas Stack.

Table 7 Monticello Offgas Stack Dispersion Parameters for Long Term Elevated Releases >500 Hrs/Yr or >150 Hrs/Qtr (cont'd)

For Standard Distances (As Measured from the Offgas Stack) (χ/Q), sec/m^3

Miles

Sector*	2.9	3.0	3.1	3.2	3.3	3.4	3.5
N	3.55E-08	3.47E-08	3.39E-08	3.31E-08	3.24E-08	3.17E-08	3.10E-08
NNE	3.34E-08	3.22E-08	3.11E-08	3.00E-08	2.90E-08	2.80E-08	2.71E-08
NE	3.03E-08	2.93E-08	2.84E-08	2.76E-08	2.67E-08	2.60E-08	2.52E-08
ENE	2.46E-08	2.37E-08	2.29E-08	2.21E-08	2.14E-08	2.07E-08	2.00E-08
E	2.30E-08	2.22E-08	2.14E-08	2.07E-08	2.00E-08	1.94E-08	1.88E-08
ESE	3.41E-08	3.29E-08	3.18E-08	3.08E-08	2.98E-08	2.89E-08	2.80E-08
SE	5.62E-08	5.39E-08	5.18E-08	4.98E-08	4.80E-08	4.62E-08	4.46E-08
SSE	5.83E-08	5.62E-08	5.42E-08	5.23E-08	5.05E-08	4.89E-08	4.73E-08
S	3.94E-08	3.86E-08	3.78E-08	3.70E-08	3.63E-08	3.55E-08	3.49E-08
SSW	3.93E-08	3.77E-08	3.61E-08	3.47E-08	3.34E-08	3.21E-08	3.09E-08
SW	3.84E-08	3.72E-08	3.61E-08	3.51E-08	3.41E-08	3.32E-08	3.23E-08
WSW	4.06E-08	3.90E-08	3.74E-08	3.60E-08	3.47E-08	3.34E-08	3.22E-08
W	4.17E-08	4.04E-08	3.93E-08	3.81E-08	3.70E-08	3.60E-08	3.50E-08
WNW	4.58E-08	4.50E-08	4.42E-08	4.34E-08	4.27E-08	4.20E-08	4.14E-08
NW	4.02E-08	3.96E-08	3.90E-08	3.85E-08	3.79E-08	3.74E-08	3.68E-08
NNW	3.76E-08	3.62E-08	3.49E-08	3.36E-08	3.25E-08	3.14E-08	3.03E-08

Period of Record: 9-1-76 to 8-31-78

* Measured relevant to the Offgas Stack.

Table 7 Monticello Offgas Stack Dispersion Parameters for Long Term Elevated Releases >500 Hrs/Yr or >150 Hrs/Qtr (cont'd)

For Standard Distances (As Measured from the Offgas Stack) (χ/Q), sec/m^3

Sector*	Miles 3.6	3.7	3.8	3.9	4.0	4.1	4.2
N	3.00E-08	2.91E-08	2.82E-08	2.74E-08	2.66E-08	2.59E-08	2.51E-08
NNE	2.63E-08	2.54E-08	2.47E-08	2.40E-08	2.33E-08	2.26E-08	2.20E-08
NE	2.45E-08	2.39E-08	2.32E-08	2.26E-08	2.20E-08	2.15E-08	2.09E-08
ENE	1.94E-08	1.88E-08	1.83E-08	1.77E-08	1.73E-08	1.68E-08	1.63E-08
E	1.82E-08	1.77E-08	1.71E-08	1.66E-08	1.62E-08	1.57E-08	1.53E-08
ESE	2.72E-08	2.64E-08	2.56E-08	2.49E-08	2.42E-08	2.35E-08	2.29E-08
SE	4.30E-08	4.16E-08	4.02E-08	3.89E-08	3.77E-08	3.65E-08	3.54E-08
SSE	4.60E-08	4.49E-08	4.37E-08	4.27E-08	4.16E-08	4.06E-08	3.97E-08
S	3.39E-08	3.30E-08	3.22E-08	3.14E-08	3.06E-08	2.99E-08	2.92E-08
SSW	3.01E-08	2.93E-08	2.86E-08	2.79E-08	2.72E-08	2.65E-08	2.59E-08
SW	3.17E-08	3.12E-08	3.07E-08	3.02E-08	2.98E-08	2.93E-08	2.89E-08
WSW	3.17E-08	3.12E-08	3.07E-08	3.03E-08	2.98E-08	2.94E-08	2.89E-08
W	3.38E-08	3.26E-08	3.15E-08	3.05E-08	2.95E-08	2.86E-08	2.77E-08
WNW	3.99E-08	3.84E-08	3.71E-08	3.58E-08	3.46E-08	3.35E-08	3.24E-08
NW	3.60E-08	3.51E-08	3.43E-08	3.35E-08	3.28E-08	3.20E-08	3.13E-08
NNW	2.94E-08	2.84E-08	2.76E-08	2.67E-08	2.60E-08	2.52E-08	2.45E-08

Period of Record: 9-1-76 to 8-31-78

* Measured relevant to the Offgas Stack.

Table 7 Monticello Offgas Stack Dispersion Parameters for Long Term Elevated Releases >500 Hrs/Yr or >150 Hrs/Qtr (cont'd)

For Standard Distances (As Measured from the Offgas Stack) (χ/Q), sec/m^3

Sector*	Miles 4.3	4.4	4.5	4.6	4.7	4.8	4.9
N	2.45E-08	2.38E-08	2.32E-08	2.26E-08	2.20E-08	2.15E-08	2.10E-08
NNE	2.14E-08	2.08E-08	2.03E-08	1.98E-08	1.93E-08	1.88E-08	1.84E-08
NE	2.04E-08	1.99E-08	1.95E-08	1.90E-08	1.86E-08	1.82E-08	1.78E-08
ENE	1.59E-08	1.55E-08	1.51E-08	1.47E-08	1.44E-08	1.40E-08	1.37E-08
E	1.49E-08	1.45E-08	1.42E-08	1.38E-08	1.35E-08	1.31E-08	1.28E-08
ESE	2.23E-08	2.18E-08	2.12E-08	2.07E-08	2.02E-08	1.97E-08	1.93E-08
SE	3.43E-08	3.33E-08	3.24E-08	3.15E-08	3.06E-08	2.98E-08	2.90E-08
SSE	3.88E-08	3.79E-08	3.71E-08	3.60E-08	3.50E-08	3.41E-08	3.32E-08
S	2.85E-08	2.79E-08	2.73E-08	2.65E-08	2.57E-08	2.50E-08	2.43E-08
SSW	2.53E-08	2.48E-08	2.42E-08	2.35E-08	2.28E-08	2.22E-08	2.16E-08
SW	2.85E-08	2.81E-08	2.77E-08	2.69E-08	2.61E-08	2.53E-08	2.46E-08
WSW	2.85E-08	2.81E-08	2.77E-08	2.69E-08	2.61E-08	2.53E-08	2.46E-08
W	2.68E-08	2.60E-08	2.53E-08	2.46E-08	2.39E-08	2.33E-08	2.26E-08
WNW	3.14E-08	3.05E-08	2.95E-08	2.87E-08	2.79E-08	2.71E-08	2.64E-08
NW	3.07E-08	3.00E-08	2.94E-08	2.86E-08	2.78E-08	2.70E-08	2.63E-08
NNW	2.38E-08	2.32E-08	2.26E-08	2.20E-08	2.14E-08	2.08E-08	2.03E-08

Period of Record: 9-1-76 to 8-31-78

Measured relevant to the Offgas Stack.

Table 7 Monticello Offgas Stack Dispersion Parameters for Long Term Elevated Releases >500 Hrs/Yr or >150 Hrs/Qtr (cont'd)

For Standard Distances (As Measured from the Offgas Stack) (χ/Q), sec/m^3

Sector*	Miles 5.0
N	2.05E-08
NNE	1.79E-08
NE	1.74E-08
ENE	1.34E-08
E	1.25E-08
ESE	1.88E-08
SE	2.82E-08
SSE	3.23E-08
S	2.36E-08
SSW	2.10E-08
SW	2.39E-08
WSW	2.39E-08
W	2.21E-08
WNW	2.57E-08
NW	2.57E-08
NNW	1.98E-08

Period of Record: 9-1-76 to 8-31-78

* Measured relevant to the Offgas Stack.

Table 8 Monticello Offgas Stack Dispersion Parameters for Long Term Elevated Releases >500 Hrs/Yr or >150 Hrs/Qtr

For Standard Distances (As Measured from the Offgas Stack) (D/Q), m^{-2}

Miles

Sector*	0.1	0.2	0.3	0.4	0.5	0.6	0.7
N	1.44E-09	4.89E-09	6.31E-09	5.66E-09	5.00E-09	4.44E-09	4.00E-09
NNE	2.25E-09	7.63E-09	9.79E-09	8.72E-09	7.59E-09	6.61E-09	5.82E-09
NE	1.06E-09	3.60E-09	4.65E-09	4.17E-09	3.68E-09	3.27E-09	2.94E-09
ENE	9.73E-10	3.30E-09	4.25E-09	3.81E-09	3.34E-09	2.95E-09	2.64E-09
E	7.84E-10	2.67E-09	3.45E-09	3.11E-09	2.77E-09	2.49E-09	2.27E-09
ESE	1.06E-09	3.61E-09	4.70E-09	4.31E-09	3.92E-09	3.63E-09	3.42E-09
SE	1.42E-09	4.87E-09	6.41E-09	6.00E-09	5.64E-09	5.40E-09	5.30E-09
SSE	1.19E-09	4.11E-09	5.46E-09	5.20E-09	5.00E-09	4.92E-09	4.96E-09
S	9.90E-10	3.38E-09	4.42E-09	4.08E-09	3.75E-09	3.50E-09	3.34E-09
SSW	5.92E-10	2.02E-09	2.65E-09	2.45E-09	2.25E-09	2.11E-09	2.03E-09
SW	3.23E-10	1.11E-09	1.48E-09	1.41E-09	1.35E-09	1.33E-09	1.34E-09
WSW	2.97E-10	1.03E-09	1.38E-09	1.33E-09	1.31E-09	1.32E-09	1.36E-09
W	4.41E-10	1.51E-09	1.98E-09	1.85E-09	1.72E-09	1.64E-09	1.59E-09
WNW	6.23E-10	2.13E-09	1.78E-09	2.56E-09	2.35E-09	2.20E-09	2.10E-09
NW	7.59E-10	2.59E-09	3.39E-09	3.13E-09	2.87E-09	2.69E-09	2.57E-09
NNW	1.94E-09	6.59E-09	8.48E-09	7.59E-09	6.66E-09	5.88E-09	5.25E-09

Period of Record: 9-1-76 to 8-31-78

* Measured relevant to the Offgas Stack.

Table 8 Monticello Offgas Stack Dispersion Parameters for Long Term Elevated Releases >500 Hrs/Yr or >150 Hrs/Qtr (cont'd)

For Standard Distances (As Measured from the Offgas Stack) (D/Q), m^{-2}

Sector*	Miles 0.8	0.9	1.0	1.1	1.2	1.3	1.4
N	3.47E-09	2.90E-09	2.39E-09	1.98E-09	1.67E-09	1.42E-09	1.23E-09
NNE	4.93E-09	4.00E-09	3.24E-09	2.65E-09	2.20E-09	1.85E-09	1.58E-09
NE	2.56E-09	2.13E-09	1.76E-09	1.46E-09	1.23E-09	1.05E-09	9.02E-10
ENE	2.27E-09	1.88E-09	1.54E-09	1.27E-09	1.06E-09	9.03E-10	7.75E-10
E	2.01E-09	1.70E-09	1.41E-09	1.18E-09	1.00E-09	8.59E-10	7.45E-10
ESE	3.12E-09	2.74E-09	2.32E-09	1.97E-09	1.69E-09	1.47E-09	1.29E-09
SE	5.02E-09	4.56E-09	3.94E-09	3.38E-09	2.94E-09	2.58E-09	2.29E-09
SSE	4.81E-09	4.46E-09	3.89E-09	3.37E-09	2.95E-09	2.61E-09	2.32E-09
S	3.09E-09	2.74E-09	2.34E-09	1.99E-09	1.72E-09	1.50E-09	1.32E-09
SSW	1.88E-09	1.67E-09	1.43E-09	1.22E-09	1.05E-09	9.18E-10	8.09E-10
SW	1.30E-09	1.21E-09	1.05E-09	9.14E-10	8.00E-10	7.06E-10	6.29E-10
WSW	1.35E-09	1.27E-09	1.12E-09	9.76E-10	8.59E-10	7.62E-10	6.81E-10
W	1.49E-09	1.35E-09	1.16E-09	9.93E-10	8.61E-10	7.54E-10	6.66E-10
WNW	1.93E-09	1.71E-09	1.46E-09	1.24E-09	1.07E-09	9.35E-10	8.22E-10
NW	2.37E-09	2.10E-09	1.80E-09	1.53E-09	1.32E-09	1.15E-09	1.01E-09
NNW	4.52E-09	3.73E-09	3.06E-09	2.53E-09	2.12E-09	1.80E-09	1.54E-09

Period of Record: 9-1-76 to 8-31-78

* Measured relevant to the Offgas Stack.

Table 8 Monticello Offgas Stack Dispersion Parameters for Long Term Elevated Releases >500 Hrs/Yr or >150 Hrs/Qtr (cont'd)

For Standard Distances (As Measured from the Offgas Stack) (D/Q), m^{-2}

Miles

Sector*	1.5	1.6	1.7	1.8	1.9	2.0	2.1
N	1.07E-09	9.36E-10	8.27E-10	7.36E-10	6.92E-10	6.30E-10	5.75E-10
NNE	1.36E-09	1.18E-09	1.03E-09	9.08E-10	8.58E-10	7.77E-10	7.07E-10
NE	7.84E-10	6.88E-10	6.08E-10	5.41E-10	5.09E-10	4.63E-10	4.23E-10
ENE	6.72E-10	5.88E-10	5.18E-10	4.59E-10	4.32E-10	3.93E-10	3.58E-10
E	6.51E-10	5.75E-10	5.10E-10	4.56E-10	4.28E-10	3.90E-10	3.57E-10
ESE	1.14E-09	1.01E-09	9.06E-10	8.16E-10	7.64E-10	6.99E-10	6.43E-10
SE	2.04E-09	1.83E-09	1.65E-09	1.50E-09	1.40E-09	1.28E-09	1.18E-09
SSE	2.08E-09	1.87E-09	1.70E-09	1.54E-09	1.44E-09	1.32E-09	1.22E-09
S	1.17E-09	1.04E-09	9.35E-10	8.44E-10	7.89E-10	7.23E-10	6.66E-10
SSW	7.17E-10	6.41E-10	5.76E-10	5.20E-10	4.86E-10	4.46E-10	4.10E-10
SW	5.63E-10	5.08E-10	4.60E-10	4.18E-10	3.90E-10	3.59E-10	3.31E-10
WSW	6.12E-10	5.53E-10	5.02E-10	4.58E-10	4.26E-10	3.93E-10	3.63E-10
W	5.93E-10	5.32E-10	4.79E-10	4.34E-10	4.05E-10	3.72E-10	3.42E-10
WNW	7.28E-10	6.50E-10	5.84E-10	5.27E-10	4.92E-10	4.51E-10	4.15E-10
NW	8.97E-10	8.01E-10	7.20E-10	6.50E-10	6.07E-10	5.57E-10	5.12E-10
NNW	1.34E-09	1.17E-09	1.03E-09	9.12E-10	8.59E-10	7.81E-10	7.12E-10

Period of Record: 9-1-76 to 8-31-78

* Measured relevant to the Offgas Stack.

Table 8 Monticello Offgas Stack Dispersion Parameters for Long Term Elevated Releases >500 Hrs/Yr or >150 Hrs/Qtr (cont'd)

For Standard Distances (As Measured from the Offgas Stack) (D/Q), m^{-2}

Miles

Sector*	2.2	2.3	2.4	2.5	2.6	2.7	2.8
N	5.28E-10	4.86E-10	4.49E-10	4.17E-10	3.87E-10	3.61E-10	3.37E-10
NNE	6.46E-10	5.93E-10	5.46E-10	5.05E-10	4.68E-10	4.35E-10	4.06E-10
NE	3.88E-10	3.58E-10	3.30E-10	3.06E-10	2.85E-10	2.65E-10	2.48E-10
ENE	3.28E-10	3.02E-10	2.79E-10	2.58E-10	2.40E-10	2.24E-10	2.09E-10
E	3.28E-10	3.03E-10	2.80E-10	2.60E-10	2.42E-10	2.26E-10	2.11E-10
ESE	5.93E-10	5.48E-10	5.09E-10	4.73E-10	4.41E-10	4.12E-10	3.86E-10
SE	1.09E-09	1.01E-09	9.43E-10	8.78E-10	8.21E-10	7.68E-10	7.20E-10
SSE	1.13E-09	1.05E-09	9.78E-10	9.12E-10	8.52E-10	7.98E-10	7.48E-10
S	6.14E-10	5.69E-10	5.28E-10	4.92E-10	4.59E-10	4.29E-10	4.02E-10
SSW	3.79E-10	3.76E-10	3.90E-10	3.92E-10	3.62E-10	3.34E-10	3.10E-10
SW	3.07E-10	2.98E-10	3.09E-10	3.18E-10	2.93E-10	2.71E-10	2.51E-10
WSW	3.36E-10	3.41E-10	3.44E-10	3.58E-10	3.30E-10	3.05E-10	2.83E-10
W	3.17E-10	3.11E-10	3.09E-10	3.19E-10	2.94E-10	2.72E-10	2.53E-10
WNW	3.83E-10	3.86E-10	3.86E-10	3.89E-10	3.59E-10	3.45E-10	3.20E-10
NW	4.73E-10	4.38E-10	4.07E-10	3.78E-10	3.53E-10	3.30E-10	3.09E-10
NNW	6.53E-10	6.01E-10	5.55E-10	5.14E-10	4.77E-10	4.44E-10	4.15E-10

Period of Record: 9-1-76 to 8-31-78

* Measured relevant to the Offgas Stack.

Table 8 Monticello Offgas Stack Dispersion Parameters for Long Term Elevated Releases >500 Hrs/Yr or >150 Hrs/Qtr (cont'd)

For Standard Distances (As Measured from the Offgas Stack) (D/Q), m^{-2}

	Miles						
Sector*	2.9	3.0	3.1	3.2	3.3	3.4	3.5
N	3.16E-10	2.96E-10	2.78E-10	2.62E-10	2.47E-10	2.33E-10	2.20E-10
NNE	3.79E-10	3.55E-10	3.33E-10	3.13E-10	2.95E-10	2.78E-10	2.63E-10
NE	2.32E-10	2.18E-10	2.04E-10	1.92E-10	1.81E-10	1.71E-10	1.62E-10
ENE	1.95E-10	1.83E-10	1.72E-10	1.62E-10	1.52E-10	1.44E-10	1.36E-10
E	1.98E-10	1.86E-10	1.75E-10	1.64E-10	1.55E-10	1.46E-10	1.39E-10
ESE	3.62E-10	3.40E-10	3.20E-10	3.02E-10	2.85E-10	2.69E-10	2.55E-10
SE	6.76E-10	6.35E-10	5.98E-10	5.64E-10	5.33E-10	5.04E-10	4.77E-10
SSE	7.03E-10	6.62E-10	6.23E-10	5.88E-10	5.56E-10	5.26E-10	4.98E-10
S	3.77E-10	3.54E-10	3.33E-10	3.14E-10	2.97E-10	2.81E-10	2.66E-10
SSW	2.88E-10	2.68E-10	2.50E-10	2.34E-10	2.20E-10	2.06E-10	1.94E-10
SW	2.44E-10	2.27E-10	2.12E-10	1.98E-10	1.86E-10	1.75E-10	1.64E-10
WSW	2.63E-10	2.45E-10	2.29E-10	2.14E-10	2.01E-10	1.89E-10	1.78E-10
W	2.47E-10	2.30E-10	2.15E-10	2.01E-10	1.88E-10	1.77E-10	1.66E-10
WNW	2.97E-10	2.76E-10	2.58E-10	2.41E-10	2.26E-10	2.12E-10	2.00E-10
NW	2.90E-10	2.73E-10	2.57E-10	2.42E-10	2.26E-10	2.16E-10	2.04E-10
NNW	3.88E-10	3.64E-10	3.41E-10	3.21E-10	3.03E-10	2.86E-10	2.70E-10

Period of Record: 9-1-76 to 8-31-78

* Measured relevant to the Offgas Stack.

Table 8 Monticello Offgas Stack Dispersion Parameters for Long Term Elevated Releases >500 Hrs/Yr or >150 Hrs/Qtr (cont'd)

For Standard Distances (As Measured from the Offgas Stack) (D/Q), m^{-2}

Miles

Sector*	3.6	3.7	3.8	3.9	4.0	4.1	4.2
N	2.09E-10	1.98E-10	1.88E-10	1.78E-10	1.70E-10	1.62E-10	1.54E-10
NNE	2.49E-10	2.36E-10	2.24E-10	2.13E-10	2.02E-10	1.93E-10	1.84E-10
NE	1.53E-10	1.45E-10	1.38E-10	1.31E-10	1.25E-10	1.19E-10	1.13E-10
ENE	1.29E-10	1.22E-10	1.16E-10	1.10E-10	1.05E-10	9.98E-11	9.51E-11
E	1.31E-10	1.24E-10	1.18E-10	1.12E-10	1.07E-10	1.02E-10	9.71E-11
ESE	2.42E-10	2.29E-10	2.18E-10	2.07E-10	1.97E-10	1.88E-10	1.79E-10
SE	4.53E-10	4.30E-10	4.08E-10	3.88E-10	3.69E-10	3.52E-10	3.36E-10
SSE	4.72E-10	4.48E-10	4.26E-10	4.05E-10	3.85E-10	3.67E-10	3.50E-10
S	2.52E-10	2.46E-10	2.34E-10	2.32E-10	2.34E-10	2.23E-10	2.12E-10
SSW	1.83E-10	1.73E-10	1.64E-10	1.59E-10	1.51E-10	1.43E-10	1.36E-10
SW	1.55E-10	1.46E-10	1.38E-10	1.31E-10	1.24E-10	1.18E-10	1.12E-10
WSW	1.68E-10	1.62E-10	1.54E-10	1.46E-10	1.38E-10	1.31E-10	1.25E-10
W	1.57E-10	1.48E-10	1.40E-10	1.33E-10	1.26E-10	1.20E-10	1.14E-10
WNW	1.88E-10	1.78E-10	1.68E-10	1.59E-10	1.51E-10	1.44E-10	1.37E-10
NW	1.94E-10	1.86E-10	1.77E-10	1.73E-10	1.76E-10	1.67E-10	1.59E-10
NNW	2.56E-10	2.43E-10	2.30E-10	2.19E-10	2.08E-10	1.98E-10	1.89E-10

Period of Record: 9-1-76 to 8-31-78

* Measured relevant to the Offgas Stack.

Table 8 Monticello Offgas Stack Dispersion Parameters for Long Term Elevated Releases >500 Hrs/Yr or >150 Hrs/Qtr (cont'd)

For Standard Distances (As Measured from the Offgas Stack) (D/Q), m^{-2}

Miles

Sector*	4.3	4.4	4.5	4.6	4.7	4.8	4.9
N	1.47E-10	1.41E-10	1.34E-10	1.29E-10	1.23E-10	1.18E-10	1.13E-10
NNE	1.75E-10	1.67E-10	1.60E-10	1.53E-10	1.47E-10	1.41E-10	1.35E-10
NE	1.08E-10	1.03E-10	9.88E-11	9.45E-11	9.05E-11	8.68E-11	8.32E-11
ENE	9.08E-11	8.67E-11	8.29E-11	7.94E-11	7.60E-11	7.28E-11	6.99E-11
E	9.26E-11	8.85E-11	8.46E-11	8.10E-11	7.75E-11	7.43E-11	7.13E-11
ESE	1.71E-10	1.63E-10	1.56E-10	1.49E-10	1.43E-10	1.37E-10	1.31E-10
SE	3.20E-10	3.06E-10	2.92E-10	2.80E-10	2.68E-10	2.57E-10	2.46E-10
SSE	3.34E-10	3.19E-10	3.05E-10	2.92E-10	2.80E-10	2.68E-10	2.57E-10
S	2.08E-10	1.98E-10	1.89E-10	1.81E-10	1.73E-10	1.66E-10	1.59E-10
SSW	1.30E-10	1.24E-10	1.18E-10	1.13E-10	1.08E-10	1.03E-10	9.90E-11
SW	1.08E-10	1.03E-10	9.82E-11	9.39E-11	8.98E-11	8.59E-11	8.24E-11
WSW	1.19E-10	1.13E-10	1.08E-10	1.03E-10	9.88E-11	9.46E-11	9.06E-11
W	1.08E-10	1.03E-10	9.87E-11	9.43E-11	9.02E-11	8.64E-11	8.28E-11
WNW	1.30E-10	1.24E-10	1.18E-10	1.13E-10	1.08E-10	1.04E-10	9.94E-11
NW	1.58E-10	1.51E-10	1.44E-10	1.38E-10	1.32E-10	1.26E-10	1.21E-10
NNW	1.80E-10	1.72E-10	1.65E-10	1.58E-10	1.51E-10	1.45E-10	1.39E-10

Period of Record: 9-1-76 to 8-31-78

* Measured relevant to the Offgas Stack.

Table 8 Monticello Offgas Stack Dispersion Parameters for Long Term Elevated Releases >500 Hrs/Yr or >150 Hrs/Qtr (cont'd)

For Standard Distances (As Measured from the Offgas Stack) (D/Q), m^{-2}

Sector*	Miles 5.0
N	1.09E-10
NNE	1.30E-10
NE	7.99E11
ENE	6.71E-11
E	6.84E-11
ESE	1.26E-10
SE	2.36E-10
SSE	2.46E-10
S	1.52E-10
SSW	9.49E-11
SW	7.90E-11
WSW	8.69E-11
W	7.94E-11
WNW	9.53E-11
NW	1.16E-10
NNW	1.33E-10

Period of Record: 9-1-76 to 8-31-78

* Measured relevant to the Offgas Stack.

Table 9 Monticello Offgas Stack Dispersion Parameters for Short Term Elevated Releases ≤500 Hrs/Yr or ≤150 Hrs/Qtr

Site Boundary Sector*	χ/Q (sec/m^3)	D/q (m^{-2})
N	1.55E-07	9.93E-09
NNE	1.41E-07	8.59E-09
NE	1.88E-07	1.16E-08
ENE	1.60E-07	6.04E-09
E	1.47E-07	9.15E-09
ESE	***	***
SE	***	***
SSE	***	***
S	***	***
SSW	***	***
SW	***	***
WSW	***	***
W	5.95E-08	2.91E-09
WNW	1.39E-07	4.68E-09
NW	***	***
NNW	2.33E-07	1.25E-08

Period of record: 9-1-76 to 8-31-78

* Measured relevant to the Offgas Stack.

*** See appropriate offgas stack long term elevated release values.

Table 10 Monticello Offgas Stack Dispersion Parameters for Short Term Elevated Releases
≤500 Hrs/Yr or ≤150 Hrs/Qtr

For Standard Distances (As Measured from the Offgas Stack) (χ/q), sec/m^3

	Miles						
Sector*	0.1	0.2	0.3	0.4	0.5	0.6	0.7
N	**	**	**	1.67E-07	1.85E-07	1.50E-07	1.18E-07
NNE	**	**	**	2.82E-07	2.50E-07	2.12E-07	1.69E-07
NE	**	**	**	7.93E-08	1.29E-07	1.21E-07	1.08E-07
ENE	**	**	**	1.63E-07	1.87E-07	1.77E-07	1.46E-07
E	**	**	**	8.63E-08	1.47E-07	1.29E-07	1.07E-07
ESE	**	**	**	***	***	6.17E-08	1.02E-07
SE	**	**	**	***	***	***	1.17E-07
SSE	**	**	**	***	***	***	1.04E-07
S	**	**	**	***	***	7.75E-08	1.13E-07
SSW	**	**	**	***	***	7.15E-08	1.03E-07
SW	**	**	**	***	***	4.73E-08	8.22E-08
WSW	**	**	**	***	***	3.82E-08	6.85E-08
W	**	**	**	***	4.06E-08	7.49E-08	8.73E-08
WNW	**	**	**	***	4.56E-08	8.41E-08	9.88E-08
NW	**	**	**	***	***	7.36E-08	1.08E-07
NNW	**	**	**	2.73E-07	2.57E-07	2.37E-07	1.94E-07

Period of Record: 9-1-76 to 8-31-78

* Measured relevant to the Offgas Stack.

** Values less than the value for 0.4 miles.

*** See appropriate offgas stack long term elevated release values.

Table 10 Monticello Offgas Stack Dispersion Parameters for Short Term Elevated Releases ≤500 Hrs/Yr or ≤150 Hrs/Qtr (cont'd)

For Standard Distances (As Measured from the Offgas Stack) (χ/q), sec/m^3

Sector*	Miles 0.8	0.9	1.0	1.1	1.2	1.3	1.4
N	1.52E-07	1.77E-07	1.94E-07	1.82E-07	1.96E-07	1.87E-07	2.07E-07
NNE	1.83E-07	2.05E-07	2.18E-07	2.30E-07	2.15E-07	1.99E-07	2.13E-07
NE	1.30E-07	1.60E-07	1.67E-07	1.75E-07	1.76E-07	1.61E-07	1.55E-07
ENE	1.62E-07	1.80E-07	1.75E-07	1.84E-07	1.96E-07	1.94E-07	1.91E-07
E	1.38E-07	1.62E-07	1.65E-07	1.75E-07	1.72E-07	1.59E-07	1.77E-07
ESE	1.36E-07	1.62E-07	1.71E-07	1.57E-07	1.62E-07	1.64E-07	1.70E-07
SE	1.56E-07	1.84E-07	1.98E-07	1.93E-07	2.02E-07	2.06E-07	2.46E-07
SSE	1.42E-07	1.78E-07	1.97E-07	2.50E-07	2.26E-07	2.35E-07	2.77E-07
S	1.55E-07	1.86E-07	2.07E-07	1.92E-07	2.08E-07	2.01E-07	2.71E-07
SSW	1.43E-07	1.64E-07	1.81E-07	1.86E-07	1.83E-07	1.79E-07	2.01E-07
SW	1.17E-07	1.45E-07	1.63E-07	1.77E-07	1.70E-07	1.74E-07	2.58E-07
WSW	9.91E-07	1.25E-07	1.31E-07	1.43E-07	1.62E-07	1.59E-07	2.45E-07
W	1.25E-07	1.56E-07	1.76E-07	1.86E-07	2.00E-07	2.04E-07	2.77E-07
WNW	1.39E-07	1.71E-07	1.89E-07	1.96E-07	2.04E-07	2.12E-07	2.79E-07
NNW	2.00E-07	2.24E-07	2.43E-07	2.48E-07	2.36E-07	2.14E-07	3.06E-07

Period of Record: 9-1-76 to 8-31-78

* Measured relevant to the Offgas Stack.

** Values less than the value for 0.4 miles.

*** See appropriate offgas stack long term elevated release values.

Table 10 Monticello Offgas Stack Dispersion Parameters for Short Term Elevated Releases ≤500 Hrs/Yr or ≤150 Hrs/Qtr (cont'd)

For Standard Distances (As Measured from the Offgas Stack) (χ/q), sec/m^3

Miles

Sector*	1.5	1.6	1.7	1.8	1.9	2.0	2.1
N	2.56E-07	1.89E-07	2.10E-07	2.05E-07	1.94E-07	1.88E-07	1.79E-07
NNE	2.59E-07	1.97E-07	2.23E-07	2.13E-07	1.97E-07	1.87E-07	1.77E-07
NE	1.71E-07	1.63E-07	1.55E-07	1.86E-07	1.77E-07	1.74E-07	1.66E-07
ENE	1.82E-07	1.67E-07	2.13E-07	1.89E-07	1.74E-07	1.69E-07	1.64E-07
E	1.73E-07	1.61E-07	1.51E-07	1.88E-07	1.75E-07	1.66E-07	1.59E-07
ESE	1.84E-07	1.77E-07	1.70E-07	***	1.55E-07	1.52E-07	1.50E-07
SE	2.06E-07	2.05E-07	1.90E-07	2.00E-07	2.01E-07	1.89E-07	1.77E-07
SSE	2.25E-07	2.10E-07	2.01E-07	2.21E-07	1.77E-07	1.78E-07	1.78E-07
S	2.10E-07	***	2.38E-07	2.35E-07	2.18E-07	2.04E-07	2.97E-07
SSW	1.90E-07	1.84E-07	2.46E-07	2.34E-07	2.24E-07	2.20E-07	2.17E-07
SW	1.80E-07	1.74E-07	1.69E-07	1.87E-07	2.01E-07	1.99E-07	1.91E-07
WSW	1.78E-07	1.76E-07	1.72E-07	1.89E-07	2.00E-07	1.99E-07	1.94E-07
W	2.14E-07	2.22E-07	2.50E-07	2.50E-07	2.32E-07	2.31E-07	2.23E-07
WNW	1.96E-07	1.87E-07	1.81E-07	1.97E-07	2.11E-07	2.09E-07	2.01E-07
NW	2.00E-07	1.90E-07	2.59E-07	2.40E-07	2.28E-07	2.10E-07	2.01E-07
NNW	2.28E-07	2.01E-07	1.96E-07	1.92E-07	1.87E-07	1.81E-07	1.74E-07

Period of Record: 9-1-76 to 8-31-78

* Measured relevant to the Offgas Stack.

** Values less than the value for 0.4 miles.

*** See appropriate offgas stack long term elevated release values.

Table 10 Monticello Offgas Stack Dispersion Parameters for Short Term Elevated Releases ≤500 Hrs/Yr or ≤150 Hrs/Qtr (cont'd)

For Standard Distances (As Measured from the Offgas Stack) (χ/q), sec/m^3

Miles

Sector*	2.2	2.3	2.4	2.5	2.6	2.7	2.8
N	1.70E-07	1.66E-07	1.58E-07	1.54E-07	1.51E-07	1.47E-07	1.37E-07
NNE	1.70E-07	1.62E-07	1.57E-07	1.51E-07	1.46E-07	1.44E-07	1.38E-07
NE	1.60E-07	1.53E-07	1.53E-07	1.47E-07	1.40E-07	1.36E-07	1.30E-07
ENE	1.57E-07	1.50E-07	1.47E-07	1.44E-07	1.36E-07	1.33E-07	1.28E-07
E	1.49E-07	1.44E-07	1.36E-07	1.33E-07	1.27E-07	1.23E-07	1.17E-07
ESE	1.48E-07	1.46E-07	1.43E-07	1.38E-07	1.33E-07	1.28E-07	1.23E-07
SE	1.95E-07	1.68E-07	1.64E-07	1.61E-07	1.55E-07	1.66E-07	1.60E-07
SSE	1.69E-07	1.58E-07	1.58E-07	1.50E-07	1.42E-07	1.35E-07	1.60E-07
S	1.65E-07	1.58E-07	1.51E-07	1.46E-07	1.41E-07	1.40E-07	1.65E-07
SSW	2.10E-07	2.11E-07	2.12E-07	1.89E-07	1.82E-07	1.76E-07	1.71E-07
SW	1.81E-07	1.90E-07	1.93E-07	1.93E-07	2.32E-07	2.23E-07	2.11E-07
WSW	1.82E-07	1.86E-07	1.79E-07	1.72E07	1.90E-07	1.84E-07	2.12E-07
W	2.15E-07	2.18E-07	2.20E-07	2.19E-07	2.10E-07	2.08E-07	2.05E-07
WNW	1.89E-07	1.89E-07	1.90E-07	1.93E-07	2.26E-07	2.18E-07	2.11E-07
NW	1.91E-07	1.86E-07	1.80E-07	1.76E-07	1.72E-07	1.69E-07	1.64E-07
NNW	1.72E-07	1.68E-07	1.68E-07	1.59E-07	1.54E-07	1.45E-07	1.36E-07

Period of Record: 9-1-76 to 8-31-78

* Measured relevant to the Offgas Stack.

** Values less than the value for 0.4 miles.

*** See appropriate offgas stack long term elevated release values.

Table 10 Monticello Offgas Stack Dispersion Parameters for Short Term Elevated Releases ≤500 Hrs/Yr or ≤150 Hrs/Qtr (cont'd)

For Standard Distances (As Measured from the Offgas Stack) (χ/q), sec/m^3

Miles

Sector*	2.9	3.0	3.1	3.2	3.3	3.4	3.5
N	1.35E-07	1.34E-07	1.32E-07	1.30E-07	1.28E-07	1.25E-07	1.23E-07
NNE	1.30E-07	1.26E-07	1.22E-07	1.19E-07	1.15E-07	1.12E-07	1.09E-07
NE	1.22E-07	1.20E-07	1.16E-07	1.14E-07	1.11E-07	1.09E-07	1.06E-07
ENE	1.21E-07	1.81E-07	1.15E-07	1.13E-07	1.10E-07	1.07E-07	1.04E-07
E	1.13E-07	1.10E-07	1.05E-07	1.03E-07	1.01E-07	1.01E-07	9.17E-08
ESE	1.19E-07	1.14E-07	1.08E-07	1.06E-07	1.03E-07	9.93E-08	9.89E-08
SE	1.31E-07	1.33E-07	1.35E-07	1.32E-07	1.26E-07	1.20E-07	1.15E-07
SSE	1.30E-07	1.32E-07	1.34E-07	1.35E-07	1.31E-07	1.26E-07	1.22E-07
S	1.63E-07	1.54E-07	1.46E-07	1.42E-07	1.34E-07	1.33E-07	1.32E-07
SSW	1.66E-07	1.57E-07	1.51E-07	1.46E-07	1.39E-07	1.34E-07	1.31E-07
SW	1.97E-07	1.82E-07	1.79E-07	1.71E-07	1.64E-07	1.59E-07	1.54E-07
WSW	2.02E-07	1.95E-07	1.85E-07	1.77E-07	1.69E-07	1.62E-07	1.54E-07
W	2.01E-07	1.92E-07	1.90E-07	1.84E-07	1.82E-07	1.78E-07	1.71E-07
WNW	2.02E-07	1.96E-07	1.92E-07	1.90E-07	1.85E-07	1.78E-07	1.75E-07
NW	1.70E-07	1.50E-07	1.48E-07	1.47E-07	1.39E-07	1.37E-07	1.38E-07
NNW	1.31E-07	1.30E-07	1.27E-07	1.22E-07	1.19E-07	1.16E-07	1.13E-07

Period of Record: 9-1-76 to 8-31-78

* Measured relevant to the Offgas Stack.

** Values less than the value for 0.4 miles.

*** See appropriate offgas stack long term elevated release values.

Table 10 Monticello Offgas Stack Dispersion Parameters for Short Term Elevated Releases ≤500 Hrs/Yr or ≤150 Hrs/Qtr (cont'd)

For Standard Distances (As Measured from the Offgas Stack) (χ/q), sec/m^3

Miles

Sector*	3.6	3.7	3.8	3.9	4.0	4.1	4.2
N	1.18E-07	1.15E-07	1.14E-07	1.11E-07	1.08E-07	1.06E-07	1.05E-07
NNE	1.07E-07	1.05E-07	1.01E-07	9.83E-08	9.61E-08	9.38E-08	9.04E-08
NE	1.03E-07	1.01E-07	9.84E-08	9.65E-08	9.20E-08	9.00E-08	8.81E-08
ENE	1.03E-07	1.01E-07	9.56E-08	9.34E-08	9.07E-08	8.79E-08	8.58E-08
E	9.00E-08	8.74E-08	8.37E-08	8.17E-08	7.94E-08	7.80E-08	7.64E-08
ESE	9.67E-08	9.46E-08	8.97E-08	8.91E-08	8.79E-08	8.64E-08	8.45E-08
SE	1.10E-07	1.06E-07	1.06E-07	1.02E-07	9.89E-08	1.03E-07	9.99E-08
SSE	1.18E-07	1.15E-07	1.11E-07	1.08E-07	1.12E-07	1.10E-07	1.08E-07
S	1.27E-07	1.23E-07	1.21E-07	1.17E-07	1.13E-07	1.10E-07	1.10E-07
SSW	1.27E-07	1.24E-07	1.21E-07	1.17E-07	1.15E-07	1.13E-07	1.08E-07
SW	1.52E-07	1.46E-07	1.43E-07	1.43E-07	1.41E-07	1.40E-07	1.38E-07
WSW	1.49E-07	1.43E-07	1.44E-07	1.43E-07	1.34E-07	1.33E-07	1.34E-07
W	1.66E-07	1.61E-07	1.56E-07	1.49E-07	1.42E-07	1.39E-07	1.35E-07
WNW	1.73E-07	1.67E-07	1.63E-07	1.58E-07	1.54E-07	1.49E-07	1.45E-07
NW	1.34E-07	1.27E-07	1.25E-07	1.24E-07	1.21E-07	1.19E-07	1.17E-07
NNW	1.10E-07	1.07E-07	1.02E-07	1.00E-07	9.75E-08	9.52E-08	9.37E-08

Period of Record: 9-1-76 to 8-31-78

* Measured relevant to the Offgas Stack.

** Values less than the value for 0.4 miles.

*** See appropriate offgas stack long term elevated release values.

Table 10 Monticello Offgas Stack Dispersion Parameters for Short Term Elevated Releases ≤500 Hrs/Yr or ≤150 Hrs/Qtr (cont'd)

For Standard Distances (As Measured from the Offgas Stack) (χ/q), sec/m^3

Miles

Sector*	4.3	4.4	4.5	4.6	4.7	4.8	4.9
N	1.01E-07	9.83E-08	9.37E-08	9.14E-08	8.97E-08	8.80E-08	8.61E-08
NNE	8.88E-08	8.71E-08	8.63E-08	8.42E-08	8.14E-08	8.00E-08	7.84E-08
NE	8.69E-08	8.53E-08	8.40E-08	8.25E-08	8.19E-08	8.02E-08	7.81E-08
ENE	8.42E-08	8.26E-08	8.09E-08	7.87E-08	7.69E-08	7.55E-08	7.38E-08
E	7.33E-08	7.27E-08	7.02E-08	6.85E-08	6.71E-08	6.56E-08	6.40E-08
ESE	8.27E-08	8.10E-08	7.40E-08	7.77E-08	7.61E-08	7.46E-08	7.32E-08
SE	9.71E-08	9.47E-08	9.24E-08	9.01E-08	8.78E-08	8.56E-08	8.18E-08
SSE	1.07E-07	1.02E-07	1.02E-07	9.90E-08	9.66E-08	9.41E-08	1.19E-07
S	1.06E-07	1.04E-07	1.02E-07	9.72E-08	9.63E-08	9.35E-08	9.03E-08
SSW	1.05E-07	1.03E-07	1.01E-07	9.78E-08	9.46E-08	9.20E-08	9.00E-08
SW	1.38E-07	1.37E-07	1.34E-07	1.30E-07	1.26E-07	1.24E-07	1.22E-07
WSW	1.31E-07	1.28E-07	1.28E-07	1.22E-07	1.20E-07	1.19E-07	1.18E-07
W	1.33E-07	1.28E-07	1.25E-07	1.24E-07	1.20E-07	1.17E-07	1.15E-07
WNW	1.43E-07	1.38E-07	1.35E-07	1.33E-07	1.33E-07	1.27E-07	1.25E-07
NW	1.14E-07	1.12E-07	1.11E-07	1.07E-07	1.04E-07	1.01E-07	9.74E-08
NNW	9.12E-08	8.89E-08	8.64E-08	8.31E-08	8.26E-08	8.08E-08	7.72E-08

Period of Record: 9-1-76 to 8-31-78

* Measured relevant to the Offgas Stack.

** Values less than the value for 0.4 miles.

*** See appropriate offgas stack long term elevated release values.

Table 10 Monticello Offgas Stack Dispersion Parameters for Short Term Elevated Releases ≤500 Hrs/Yr or ≤150 Hrs/Qtr (cont'd)

For Standard Distances (As Measured from the Offgas Stack) (χ/q), sec/m^3

Sector*	Miles 5.0
N	8.28E-08
NNE	7.56E-08
NE	7.58E-08
ENE	7.11E-08
E	6.33E-08
ESE	7.16E-08
SE	8.10E-08
SSE	1.11E-07
S	8.84E-08
SSW	8.80E-08
SW	1.19E-07
WSW	1.13E-07
W	1.13E-07
WNW	1.21E-07
NW	9.51E-08
NNW	7.53E-08

Period of Record: 9-1-76 to 8-31-78

* Measured relevant to the Offgas Stack.

** Values less than the value for 0.4 miles.

*** See appropriate offgas stack long term elevated release values.

Table 11 Monticello Offgas Stack Dispersion Parameters for Short Term Elevated Releases ≤500 HrsYr or ≤150 Hrs/Qtr

For Standard Distances (As Measured from the Offgas Stack) (D/q), m^{-2}

Miles

Sector*	0.1	0.2	0.3	0.4	0.5	0.6	0.7
N	**	**	**	1.32E-08	1.31E-08	9.45E-09	6.60E-09
NNE	**	**	**	2.39E-08	1.86E-08	1.39E-09	9.88E-09
NE	**	**	**	6.01E-09	7.80E-09	6.24E-09	4.92E-09
ENE	**	**	**	1.31E-08	1.14E-08	8.79E-09	6.20E-09
E	**	**	**	7.37E-09	9.17E-09	6.52E-09	4.58E-09
ESE	**	**	**	***	***	3.74E-09	5.28E-09
SE	**	**	**	***	***	***	6.26E-09
SSE	**	**	**	***	***	***	6.60E-09
S	**	**	**	***	***	4.41E-09	5.43E-09
SSW	**	**	**	***	***	3.39E-09	4.09E-09
SW	**	**	**	***	***	2.30E-09	3.34E-09
WSW	**	**	**	***	***	2.16E-09	3.17E-09
W	**	**	**	***	2.22E-09	3.38E-09	3.35E-09
WNW	**	**	**	***	2.55E-09	3.89E-09	3.94E-09
NW	**	**	**	***	***	3.17E-09	4.01E-09
NNW	**	**	**	2.13E-08	1.68E-08	1.30E-08	9.18E-09

Period of Record: 9-1-76 to 8-31-78

* Measured relevant to the Offgas Stack.

Table 11 Monticello Offgas Stack Dispersion Parameters for Short Term Elevated Releases ≤500 HrsYr or ≤150 Hrs/Qtr (cont'd)

For Standard Distances (As Measured from the Offgas Stack) (D/q), m^{-2}

Miles

Sector*	0.8	0.9	1.0	1.1	1.2	1.3	1.4
N	7.46E-09	7.64E-09	7.08E-09	5.61E-09	5.20E-09	4.30E-09	4.21E-09
NNE	9.52E-09	9.50E-09	8.74E-09	7.97E-09	6.49E-09	5.28E-09	5.05E-09
NE	5.32E-09	5.92E-09	5.43E-09	4.98E-09	4.43E-09	3.60E-09	3.11E-09
ENE	6.00E-09	5.94E-09	5.01E-09	4.56E-09	4.25E-09	3.75E-09	3.31E-09
E	5.18E-09	5.40E-09	4.74E-09	4.36E-09	3.76E-09	3.08E-09	3.09E-09
ESE	6.16E-09	6.58E-09	5.98E-09	4.72E-09	4.30E-09	3.89E-09	3.66E-09
SE	7.39E-09	7.99E-09	7.50E-09	6.40E-09	5.96E-09	5.50E-09	6.04E-09
SSE	7.58E-09	8.26E-09	7.59E-09	6.02E-09	6.29E-09	5.79E-09	6.12E-09
S	6.46E-09	6.88E-09	6.53E-09	5.17E-09	4.89E-09	4.19E-09	5.08E-09
SSW	4.90E-09	4.99E-09	4.71E-09	4.17E-09	3.58E-09	3.12E-09	3.17E-09
SW	5.67E-09	4.25E-09	3.97E-09	3.65E-09	3.03E-09	2.74E-09	3.65E-09
WSW	3.83E-09	4.16E-09	3.58E-09	3.23E-09	3.12E-09	2.66E-09	3.64E-09
W	4.14E-09	4.59E-09	4.35E-09	3.87E-09	3.59E-09	3.20E-09	3.87E-09
WNW	4.86E-09	5.37E-09	5.09E-09	4.51E-09	4.10E-09	3.77E-09	4.44E-09
NW	4.75E-09	5.16E-09	5.03E-09	4.25E-09	3.55E-09	3.43E-09	3.86E-09
NNW	8.37E-09	8.39E-09	7.94E-09	7.09E-09	5.96E-09	4.82E-09	6.18E-09

Period of Record: 9-1-76 to 8-31-78

* Measured relevant to the Offgas Stack.

Table 11 Monticello Offgas Stack Dispersion Parameters for Short Term Elevated Releases ≤500 HrsYr or ≤150 Hrs/Qtr (cont'd)

For Standard Distances (As Measured from the Offgas Stack) (D/q), m^{-2}

Miles

Sector*	1.5	1.6	1.7	1.8	1.9	2.0	2.1
N	4.63E-09	3.13E-09	3.20E-09	2.90E-09	2.69E-09	2.48E-09	2.24E-09
NNE	5.50E-09	3.78E-09	4.02E-09	3.56E-09	3.27E-09	2.95E-09	2.66E-09
NE	3.10E-09	2.65E-09	2.28E-09	2.48E-09	2.27E-09	2.08E-09	1.85E-09
ENE	2.86E-09	2.40E-09	2.81E-09	2.31E-09	2.08E-09	1.91E-09	1.76E-09
E	2.73E-09	2.35E-09	2.05E-09	2.39E-09	2.18E-09	1.96E-09	1.81E-09
ESE	3.62E-09	3.20E-09	2.86E-09	***	2.38E-09	2.22E-09	2.10E-09
SE	4.68E-09	4.28E-09	3.67E-09	3.61E-09	3.49E-09	3.09E-09	2.75E-09
SSE	4.50E-09	3.93E-09	3.57E-09	3.70E-09	2.90E-09	2.79E-09	2.69E-09
S	3.59E-09	***	3.58E-09	3.34E-09	3.04E-09	2.74E-09	2.55E-09
SSW	2.73E-09	2.34E-09	2.81E-09	2.42E-09	2.17E-09	1.97E-09	1.80E-09
SW	2.32E-09	1.98E-09	1.72E-09	1.72E-09	1.72E-09	1.57E-09	1.40E-09
WSW	2.38E-09	2.07E-09	1.80E-09	1.77E-09	1.73E-09	1.58E-09	1.42E-09
W	2.70E-09	2.47E-09	2.47E-09	2.22E-09	1.92E-09	1.75E-09	1.57E-09
WNW	2.83E-09	2.38E-09	2.06E-09	2.02E-09	2.03E-09	1.84E-09	1.64E-09
NW	3.09E-09	2.70E-09	3.41E-09	2.94E-09	2.70E-09	2.35E-09	2.13E-09
NNW	4.19E-09	3.41E-09	3.09E-09	2.84E-09	2.74E-09	2.54E-09	2.33E-09

Period of Record: 9-1-76 to 8-31-78

* Measured relevant to the Offgas Stack.

*** See appropriate long term values.

Table 11 Monticello Offgas Stack Dispersion Parameters for Short Term Elevated Releases ≤500 HrsYr or ≤150 Hrs/Qtr (cont'd)

For Standard Distances (As Measured from the Offgas Stack) (D/q), m^{-2}

Miles

Sector*	2.2	2.3	2.4	2.5	2.6	2.7	2.8
N	2.04E-09	1.90E-09	1.75E-09	1.64E-09	1.53E-09	1.42E-09	1.27E-09
NNE	2.45E-09	2.25E-09	2.10E-09	1.95E-09	1.82E-09	1.73E-09	1.61E-09
NE	1.67E-09	1.51E-09	1.42E-09	1.30E-09	1.19E-09	1.11E-09	1.03E-09
ENE	1.61E-09	1.47E-09	1.38E-09	1.29E-09	1.18E-09	1.12E-09	1.04E-09
E	1.62E-09	1.51E-09	1.37E-09	1.30E-09	1.20E-09	1.12E-09	1.04E-09
ESE	1.99E-09	1.88E-09	1.78E-09	1.66E-09	1.55E-09	1.44E-09	1.34E-09
SE	2.89E-09	2.38E-09	2.24E-09	2.12E-09	1.97E-09	2.09E-09	1.97E-09
SSE	2.47E-09	2.24E-09	2.18E-09	2.01E-09	1.85E-09	1.72E-09	1.98E-09
S	2.06E-09	1.92E-09	1.80E-09	1.67E-09	1.54E-09	1.46E-09	1.64E-09
SSW	1.62E-09	1.64E-09	1.73E-09	1.57E-09	1.46E-09	1.37E-09	1.29E-09
SW	1.24E-09	1.27E-09	1.35E-09	1.40E-09	1.60E-09	1.48E-09	1.34E-09
WSW	1.24E-09	1.29E-09	1.26E-09	1.27E-09	1.35E-09	1.27E-09	1.42E-09
W	1.40E-09	1.40E-09	1.42E-09	1.47E-09	1.35E-09	1.27E-09	1.20E-09
WNW	1.43E-09	1.46E-09	1.48E-09	1.52E-09	1.68E-09	1.58E-09	1.44E-09
NW	1.93E-09	1.80E-09	1.67E-09	1.57E-09	1.45E-09	1.35E-09	1.25E-09
NNW	2.22E-09	2.09E-09	2.02E-09	1.85E-09	1.74E-09	1.58E-09	1.44E-09

Period of Record: 9-1-76 to 8-31-78

* Measured relevant to the Offgas Stack.

Table 11 Monticello Offgas Stack Dispersion Parameters for Short Term Elevated Releases ≤500 HrsYr or ≤150 Hrs/Qtr (cont'd)

For Standard Distances (As Measured from the Offgas Stack) (D/q), m^{-2}

Miles

Sector*	2.9	3.0	3.1	3.2	3.3	3.4	3.5
N	1.20E-09	1.15E-09	1.08E-09	1.03E-09	9.77E-10	9.22E-10	8.74E-10
NNE	1.47E-09	1.39E-09	1.31E-09	1.25E-09	1.17E-09	1.11E-09	1.06E-09
NE	9.37E-10	8.90E-10	8.37E-10	7.98E-10	7.54E-10	7.19E-10	6.82E10
ENE	9.64E-10	9.11E-10	8.65E-10	8.28E-10	7.85E-10	7.41E-10	7.09E-10
E	9.72E-10	9.18E-10	8.55E-10	8.15E-10	7.80E-10	7.63E-10	6.77E-10
ESE	1.26E-09	1.18E-09	1.09E-09	1.04E-09	9.85E-10	9.24E-10	9.01E-10
SE	1.58E-09	1.57E-09	1.56E-09	1.49E-09	1.40E-09	1.31E-09	1.23E-09
SSE	1.57E-09	1.55E-09	1.54E-09	1.52E-09	1.44E-09	1.36E-09	1.28E-09
S	1.56E-09	1.41E-09	1.29E-09	1.21E-09	1.10E-09	1.05E-09	1.01E-09
SSW	1.22E-09	1.12E-09	1.04E-09	9.83E-10	9.12E-10	8.63E-10	8.24E-10
SW	1.25E-09	1.11E-09	1.05E-09	9.69E-10	8.96E-10	8.36E-10	7.83E-10
WSW	1.31E-09	1.22E-09	1.13E-09	1.05E-09	9.80E-10	9.14E-10	8.49E-10
W	1.19E-09	1.09E-09	1.04E-09	9.69E-10	9.26E-10	8.75E-10	8.11E-10
WNW	1.31E-09	1.21E-09	1.12E-09	1.06E-09	9.78E-10	9.00E-10	8.43E-10
NW	1.23E-09	1.03E09	9.72E-10	9.26E-10	8.37E-10	7.94E-10	7.63E-10
NNW	1.35E-09	1.30E-09	1.25E-09	1.17E-09	1.11E-09	1.06E-09	1.44E-09

Period of Record: 9-1-76 to 8-31-78

* Measured relevant to the Offgas Stack.

Table 11 Monticello Offgas Stack Dispersion Parameters for Short Term Elevated Releases ≤500 HrsYr or ≤150 Hrs/Qtr (cont'd)

For Standard Distances (As Measured from the Offgas Stack) (D/q), m^{-2}

Miles

Sector*	3.6	3.7	3.8	3.9	4.0	4.1	4.2
N	8.20E-10	7.85E-10	7.57E-10	7.26E-10	6.90E-10	6.64E-10	6.42E-10
NNE	1.01E-09	9.76E-10	9.14E-10	8.72E-10	8.35E-10	7.98E-10	7.55E-10
NE	6.45E-10	6.15E-10	5.85E-10	5.60E-10	5.22E-10	4.99E-10	4.77E-10
ENE	6.83E-10	6.52E-10	6.06E-10	5.79E-10	5.51E-10	5.22E-10	5.00E-10
E	6.49E-10	6.16E-10	5.77E-10	5.51E-10	5.25E-10	5.05E-10	4.85E-10
ESE	8.60E-10	8.21E-10	7.64E-10	7.41E-10	7.16E-10	6.91E-10	6.61E-10
SE	1.16E-09	1.10E-09	1.08E-09	1.02E-09	9.68E-10	9.93E-10	9.48E-10
SSE	1.21E-09	1.15E-09	1.08E-09	1.02E-09	1.04E-09	9.94E-10	9.52E-10
S	9.44E-10	9.15E-10	8.76E-10	8.65E-10	8.63E-10	8.23E-10	7.95E-10
SSW	7.76E-10	7.35E-10	6.96E-10	6.69E-10	6.35E-10	6.08E-10	5.70E-10
SW	7.42E-10	6.82E-10	6.45E-10	6.21E-10	5.90E-10	5.64E-10	5.37E-10
WSW	7.90E-10	7.45E-10	7.21E-10	6.88E-10	6.21E-10	5.94E-10	5.78E-10
W	7.69E-10	7.29E-10	6.93E-10	6.50E-10	6.08E-10	5.83E-10	5.56E-10
WNW	8.16E-10	7.73E-10	7.41E-10	7.05E-10	6.72E-10	6.38E-10	6.11E-10
NW	7.24E-10	6.75E-10	6.45E-10	6.43E-10	6.48E-10	6.19E-10	5.95E-10
NNW	9.60E-10	9.10E-10	8.53E-10	8.18E-10	7.82E-10	7.49E-10	7.22E-10

Period of Record: 9-1-76 to 8-31-78

* Measured relevant to the Offgas Stack.

Table 11 Monticello Offgas Stack Dispersion Parameters for Short Term Elevated Releases ≤500 HrsYr or ≤150 Hrs/Qtr (cont'd)

For Standard Distances (As Measured from the Offgas Stack) (D/q), m^{-2}

Miles

Sector*	4.3	4.4	4.5	4.6	4.7	4.8	4.9
N	6.07E-10	5.80E-10	5.43E-10	5.20E-10	5.01E-10	4.83E-10	4.65E-10
NNE	7.27E-10	7.00E-10	6.81E-10	6.52E-10	6.20E-10	5.98E-10	5.76E-10
NE	4.61E-10	4.42E-10	4.27E-10	4.10E-10	3.99E-10	3.83E-10	3.66E-10
ENE	4.81E-10	4.63E-10	4.45E-10	4.24E-10	4.07E-10	3.92E-10	3.76E-10
E	4.55E-10	4.43E-10	4.19E-10	4.02E-10	3.86E-10	3.71E-10	3.55E-10
ESE	6.34E-10	6.06E-10	5.45E-10	5.59E-10	5.39E-10	5.19E-10	4.97E-10
SE	9.05E-10	8.70E-10	8.33E-10	8.01E-10	7.69E-10	7.38E-10	6.94E-10
SSE	9.43E-10	8.59E-10	8.39E-10	8.03E-10	7.73E-10	7.40E-10	9.18E-10
S	7.75E-10	7.42E-10	7.10E-10	6.65E-10	6.49E-10	6.21E-10	5.91E-10
SSW	5.39E-10	5.15E-10	4.91E-10	4.69E-10	4.47E-10	4.28E-10	4.13E-10
SW	5.23E-10	5.02E-10	4.74E-10	4.53E-10	4.35E-10	4.22E-10	4.08E-10
WSW	5.46E-10	5.16E-10	4.98E-10	4.69E-10	4.55E-10	4.45E-10	4.34E-10
W	5.35E-10	5.09E-10	4.89E-10	4.77E-10	4.53E-10	4.36E-10	4.20E-10
WNW	5.91E-10	5.61E-10	5.41E-10	5.24E-10	5.16E-10	4.87E-10	4.69E-10
NW	5.88E-10	5.66E-10	5.44E-10	5.17E-10	4.96E-10	4.72E-10	4.48E-10
NNW	6.90E-10	6.60E-10	6.30E-10	5.96E-10	5.83E-10	5.61E-10	5.28E-10

Period of Record: 9-1-76 to 8-31-78

* Measured relevant to the Offgas Stack.

Table 1.1 Monticello Offgas Stack Dispersion Parameters for Short Term Elevated Releases ≤500 HrsYr or ≤150 Hrs/Qtr (cont'd)

For Standard Distances (As Measured from the Offgas Stack) (D/q), m^{-2}

Sector*	Miles 5.0
N	4.39E-10
NNE	5.46E-10
NE	3.48E-10
ENE	3.56E-10
E	3.45E-10
ESE	4.80E-10
SE	6.78E-10
SSE	8.45E-10
S	5.70E-10
SSW	3.98E-10
SW	3.92E-10
WSW	4.12E-10
W	4.05E-10
WNW	4.48E-10
NW	4.31E-10
NNW	5.06E-10

Period of Record: 9-1-76 to 8-31-78

* Measured relevant to the Offgas Stack.

Table 12 Monticello Reactor Building Vent Dispersion Parameters for Short Term Elevated Releases ≤500 Hrs/Yr or ≤150 Hrs/Qtr

Sector*	Distance Miles	Distance Meters	χ/q (sec/m)^3 No Decay Undepleted	D/q (m^{-2})
N	0.51	821.	5.18E-06	7.19E-08
NNE	0.58	933.	3.51E-06	5.02E-08
NE	0.65	1046.	2.33E-06	2.93E-08
ENE	0.83	1336.	1.82E-06	1.69E-08
E	0.59	950.	3.67E-06	3.90E-08
ESE	0.59	950.	4.95E-06	6.51E-08
SE	0.61	982.	4.96E-06	6.49E-08
SSE	0.43	692.	8.06E-06	1.18E-07
S	0.34	547.	6.92E-06	9.30E-08
SSW	0.32	515.	5.92E-06	7.04E-08
SW	0.32	515.	6.31E-06	8.24E-08
WSW	0.35	563.	4.91E-06	5.50E-08
W	0.48	772.	3.38E-06	3.82E-08
WNW	0.68	1094.	2.94E-06	2.88E-08
NW	0.43	692.	5.70E-06	7.09E-08
NNW	0.53	853.	4.44E-06	6.09E-08

Period of Record: 9-1-76 to 8-31-78

* Measured relevant to the Reactor Vent.

Table 13 Reactor Building Vent Dispersion Parameters for Short Term Elevated Releases ≤500 Hrs/Yr or ≤150 Hrs/Qtr

For Standard Distances (As Measured from the Offgas Stack) (χ/q), sec/m^3

Miles

Sector*	0.1	0.2	0.3	0.4	0.5	0.6	0.7
N	7.30E-05	2.19E-05	1.10E-05	7.14E-06	5.28E-06	4.19E-06	3.46E-06
NNE	5.81E-05	1.77E-05	8.96E-06	5.84E-06	4.23E-06	3.34E-06	2.79E-06
NE	4.26E-05	1.29E-05	6.69E-06	4.33E-06	3.19E-06	2.54E-06	2.16E-06
ENE	4.27E-05	1.29E-05	6.65E-06	4.32E-06	3.15E-06	2.53E-06	2.16E-06
E	5.76E-05	1.73E-05	9.22E-06	6.20E-06	4.51E-06	3.63E-06	3.04E-06
ESE	7.80E-05	2.30E-05	1.24E-05	8.28E-06	6.16E-06	4.84E-06	4.01E-06
SE	8.52E-05	2.48E-05	1.31E-05	8.85E-06	6.46E-06	5.08E-06	4.18E-06
SSE	8.87E-05	2.60E-05	1.36E-05	8.91E-06	6.53E-06	5.15E-06	4.22E-06
S	4.89E-05	1.47E-05	7.95E-06	5.35E-06	3.95E-06	3.17E-06	2.63E-06
SSW	4.04E-05	1.19E-05	6.58E-06	4.38E-06	3.34E-06	2.80E-06	2.46E-06
SW	4.37E-05	1.34E-05	7.26E-06	4.76E-06	3.62E-06	2.97E-06	2.62E-06
WSW	3.65E-05	1.09E-05	6.13E-06	4.11E-06	3.17E-06	2.70E-06	2.43E-06
W	4.07E-05	1.23E-05	6.47E-06	4.32E-06	3.19E-06	2.67E-06	2.35E-06
WNW	5.53E-05	1.65E-05	8.74E-06	5.74E-06	4.22E-06	3.37E-06	2.85E-06
NW	6.25E-05	1.85E-05	9.62E-06	6.32E-06	4.65E-06	3.76E-06	3.15E-06
NNW	7.11E-05	2.11E-05	1.04E-05	6.70E-06	4.78E-06	3.76E-06	3.15E-06

Period of Record: 9-1-76 to 8-31-78

* Measured relevant to the Reactor Vent.

Table 13 Reactor Building Vent Dispersion Parameters for Short Term Elevated Releases ≤500 Hrs/Yr or ≤150 Hrs/Qtr (cont'd)

For Standard Distances (As Measured from the Offgas Stack) (χ/q), sec/m^3

Miles

Sector*	0.8	0.9	1.0	1.1	1.2	1.3	1.4
N	2.84E-06	2.43E-06	2.05E-06	1.79E-06	1.61E-06	1.46E-06	1.31E-06
NNE	2.33E-06	2.02E-06	1.71E-06	1.51E-06	1.37E-06	1.24E-06	1.12E-06
NE	1.83E-06	1.58E-06	1.37E-06	1.21E-06	1.11E-06	9.99E-06	9.23E-06
ENE	1.87E-06	1.64E-06	1.46E-06	1.31E-06	1.20E-06	1.11E-06	1.04E-06
E	2.51E-06	2.18E-06	1.87E-06	1.64E-06	1.50E-06	1.38E-06	1.26E-06
ESE	3.34E-06	2.77E-06	2.38E-06	2.07E-06	1.80E-06	1.59E-06	1.44E-06
SE	3.42E-06	2.82E-06	2.39E-06	2.07E-06	1.78E-06	1.57E-06	1.40E-06
SSE	3.47E-06	2.89E-06	2.43E-06	2.12E-06	1.86E-06	1.64E-06	1.47E-06
S	2.27E-06	1.96E-06	1.70E-06	1.51E-06	1.38E-06	1.27E-06	1.15E-06
SSW	2.18E-06	1.93E-06	1.74E-06	1.52E-06	1.48E-06	1.33E-06	1.21E-06
SW	2.26E-06	1.99E-06	1.81E-06	1.58E-06	1.44E-06	1.32E-06	1.21E-06
WSW	2.18E-06	1.94E-06	1.82E-06	1.63E-06	1.48E-06	1.39E-06	1.29E-06
W	2.07E-06	1.87E-06	1.67E-06	1.52E-06	1.41E-06	1.29E-06	1.19E-06
WNW	2.47E-06	2.15E-06	1.86E-06	1.68E-06	1.52E-06	1.37E-06	1.26E-06
NW	2.60E-06	2.22E-06	1.89E-06	1.64E-06	1.49E-06	1.34E-06	1.22E-06
NNW	2.64E-06	2.25E-06	1.90E-06	1.68E-06	1.50E-06	1.37E-06	1.25E-06

Period of Record: 9-1-76 to 8-31-78

* Measured relevant to the Reactor Vent.

Table 13 Reactor Building Vent Dispersion Parameters for Short Term Elevated Releases ≤500 Hrs/Yr or ≤150 Hrs/Qtr (cont'd)

For Standard Distances (As Measured from the Offgas Stack) (χ/q), sec/m^3

Sector*	Miles 1.5	1.6	1.7	1.8	1.9	2.0	2.1
N	1.28E-06	1.15E-06	1.05E-06	9.60E-07	9.00E-07	8.28E-07	7.67E-07
NNE	1.11E-06	9.94E-07	9.14E-07	8.44E-07	7.91E-07	7.31E-07	6.94E-07
NE	8.63E-07	7.69E-07	7.26E-07	7.09E-07	6.71E-07	6.31E-07	6.08E-07
ENE	9.50E-07	9.08E-07	8.65E-07	8.22E-07	7.80E-07	7.31E-07	7.00E-07
E	1.15E-06	1.06E-06	1.02E-06	9.40E-07	8.72E-07	8.20E-07	7.72E-07
ESE	1.31E-06	1.16E-06	1.07E-06	1.03E-06	9.41E-07	8.73E-07	8.08E-07
SE	1.26E-06	1.15E-06	1.06E-06	1.01E-06	9.48E-07	8.74E-07	8.19E-07
SSE	1.33E-06	1.17E-06	1.09E-06	1.05E-06	9.69E-07	9.01E-07	8.34E-07
S	1.13E-06	1.00E-06	9.21E-07	8.55E-07	7.94E-07	7.33E-07	6.96E-07
SSW	1.19E-06	1.12E-06	1.08E-06	1.04E-06	1.02E-06	1.02E-06	9.95E-07
SW	1.18E-06	1.09E-06	1.06E-06	1.01E-06	9.62E-07	9.53E-07	9.34E-07
WSW	1.27E-06	1.21E-06	1.16E-06	1.09E-06	1.05E-06	1.04E-06	1.02E-06
W	1.19E-06	1.12E-06	1.06E-06	1.02E-06	1.01E-06	9.95E-07	9.91E-07
WNW	1.25E-06	1.16E-06	1.11E-06	1.06E-06	1.02E-06	1.01E-06	9.90E-07
NW	1.09E-06	9.91E-07	9.57E-07	8.87E-07	8.18E-07	7.65E-07	7.25E-07
NNW	1.24E-06	1.12E-06	1.03E-06	9.46E-07	8.85E-07	8.17E-07	7.74E-07

Period of Record: 9-1-76 to 8-31-78

* Measured relevant to the Reactor Vent.

Table 13 Reactor Building Vent Dispersion Parameters for Short Term Elevated Releases ≤500 Hrs/Yr or ≤150 Hrs/Qtr (cont'd)

For Standard Distances (As Measured from the Offgas Stack) (χ/q), sec/m^3

Miles

Sector*	2.2	2.3	2.4	2.5	2.6	2.7	2.8
N	7.21E-07	6.79E-07	6.38E-07	6.10E-07	5.92E-07	5.77E-07	5.62E-07
NNE	6.47E-07	6.14E-07	5.79E-07	5.45E-07	5.26E-07	4.99E-07	4.80E-07
NE	5.81E-07	5.55E-07	5.23E-07	5.11E-07	4.86E-07	4.63E-07	4.47E-07
ENE	6.68E-07	6.41E-07	6.10E-07	5.90E-07	5.62E-07	5.41E-07	5.22E-07
E	7.25E-07	6.92E-07	6.51E-07	6.19E-07	5.74E-07	5.53E-07	5.35E-07
ESE	7.53E-07	7.07E-07	6.62E-07	6.25E-07	5.91E-07	5.56E-07	5.28E-07
SE	7.76E-07	7.36E-07	7.02E-07	6.75E-07	6.37E-07	6.04E-07	5.74E-07
SSE	7.74E-07	7.28E-07	6.87E-07	6.46E-07	6.10E-07	5.77E-07	5.51E-07
S	6.44E-07	6.08E-07	5.80E-07	5.54E-07	5.40E-07	5.25E-07	5.14E-07
SSW	9.71E-07	9.89E-07	9.88E-07	9.58E-07	9.03E-07	8.47E-07	8.10E-07
SW	9.09E-07	9.03E-07	8.97E-07	8.65E-07	8.24E-07	7.90E-07	7.65E-07
WSW	9.86E-07	9.81E-07	9.76E-07	9.48E-07	8.87E-07	8.35E-07	7.92E-07
W	9.66E-07	9.80E-07	9.78E-07	9.56E-07	9.12E-07	8.87E-07	8.66E-07
WNW	9.90E-07	9.88E-07	9.97E-07	9.75E-07	9.54E-07	9.43E-07	9.29E-07
NW	6.91E-07	6.47E-07	6.07E-07	5.89E-07	5.72E-07	5.60E-07	5.51E-07
NNW	7.27E-07	6.76E-07	6.47E-07	6.28E-07	5.95E-07	5.74E-07	5.52E-07

Period of Record: 9-1-76 to 8-31-78

* Measured relevant to the Reactor Vent.

Table 13 Reactor Building Vent Dispersion Parameters for Short Term Elevated Releases ≤500 Hrs/Yr or ≤150 Hrs/Qtr (cont'd)

For Standard Distances (As Measured from the Offgas Stack) (χ/q), sec/m³

Miles

Sector*	2.9	3.0	3.1	3.2	3.3	3.4	3.5
N	5.48E-07	5.29E-07	5.16E-07	5.02E-07	4.91E-07	4.99E-07	4.82E-07
NNE	4.65E-07	4.49E-07	4.30E-07	4.15E-07	3.98E-07	3.83E-07	3.71E-07
NE	4.31E-07	4.13E-07	3.96E-07	3.82E-07	3.66E-07	3.51E-07	3.39E-07
ENE	5.06E-07	4.87E-07	4.64E-07	4.52E-07	4.36E-07	4.25E-07	4.14E-07
E	5.13E-07	5.00E-07	4.80E-07	4.62E-07	4.45E-07	4.27E-07	4.09E-07
ESE	5.01E-07	4.74E-07	4.57E-07	4.36E-07	4.15E-07	3.99E-07	3.83E-07
SE	5.51E-07	5.28E-07	5.05E-07	4.78E-07	4.55E-07	4.35E-07	4.16E-07
SSE	5.27E-07	5.06E-07	4.85E-07	4.59E-07	4.44E-07	4.26E-07	4.10E-07
S	5.03E-07	4.91E-07	5.05E-07	4.93E-07	4.96E-07	4.76E-07	4.67E-07
SSW	7.70E-07	7.34E-07	7.03E-07	6.76E-07	6.48E-07	6.25E-07	5.97E-07
SW	7.38E-07	7.09E-07	6.87E-07	6.61E-07	6.43E-07	6.16E-07	5.94E-07
WSW	7.52E-07	7.13E-07	6.84E-07	6.52E-07	6.24E-07	6.02E-07	5.73E-07
W	8.43E-07	8.16E-07	7.91E-07	7.64E-07	7.44E-07	7.09E-07	6.90E-07
WNW	9.07E-07	8.94E-07	8.62E-07	8.44E-07	8.18E-07	8.00E-07	7.84E-07
NW	5.34E-07	5.22E-07	5.28E-07	5.15E-07	5.16E-07	5.04E-07	4.97E-07
NNW	5.28E-07	5.08E-07	4.93E-07	4.74E-07	4.55E-07	4.35E-07	4.20E-07

Period of Record: 9-1-76 to 8-31-78

* Measured relevant to the Reactor Vent.

Table 13 Reactor Building Vent Dispersion Parameters for Short Term Elevated Releases ≤500 Hrs/Yr or ≤150 Hrs/Qtr (cont'd)

For Standard Distances (As Measured from the Offgas Stack) (χ/q), sec/m^3

Miles

Sector*	3.6	3.7	3.8	3.9	4.0	4.1	4.2
N	4.65E-07	4.49E-07	4.32E-07	4.19E-07	4.06E-07	3.95E-07	3.83E-07
NNE	3.58E-07	3.47E-07	3.37E-07	3.25E-07	3.16E-07	3.18E-07	3.08E-07
NE	3.29E-07	3.18E-07	3.10E-07	3.01E-07	2.93E-07	2.90E-07	2.77E-07
ENE	4.02E-07	3.90E-07	3.80E-07	3.72E-07	3.60E-07	3.55E-07	3.46E-07
E	3.97E-07	3.83E-07	3.72E-07	3.74E-07	3.66E-07	3.55E-07	3.44E-07
ESE	3.71E-07	3.57E-07	3.42E-07	3.37E-07	3.28E-07	3.17E-07	3.06E-07
SE	4.01E-07	3.86E-07	3.70E-07	3.61E-07	3.48E-07	3.44E-07	3.42E-07
SSE	3.92E-07	3.78E-07	3.68E-07	3.66E-07	3.52E-07	3.41E-07	3.29E-07
S	4.49E-07	4.43E-07	4.36E-07	4.29E-07	4.22E-07	4.16E-07	4.12E-07
SSW	5.79E-07	5.58E-07	5.49E-07	5.38E-07	5.25E-07	5.14E-07	5.02E-07
SW	5.80E-07	5.64E-07	5.48E-07	5.28E-07	5.15E-07	5.04E-07	4.94E-07
WSW	5.61E-07	5.59E-07	5.50E-07	5.35E-07	5.23E-07	5.13E-07	4.90E-07
W	6.66E-07	6.40E-07	6.16E-07	5.94E-07	5.73E-07	5.54E-07	5.36E-07
WNW	7.52E-07	7.22E-07	6.90E-07	6.65E-07	6.37E-07	6.19E-07	5.97E-07
NW	4.79E-07	4.71E-07	4.66E-07	4.57E-07	4.49E-07	4.41E-07	4.38E-07
NNW	4.07E-07	3.95E-07	3.86E-07	3.72E-07	3.68E-07	3.57E-07	3.51E-07

Period of Record: 9-1-76 to 8-31-78

* Measured relevant to the Reactor Vent.

Table 13 Reactor Building Vent Dispersion Parameters for Short Term Elevated Releases ≤500 Hrs/Yr or ≤150 Hrs/Qtr (cont'd)

For Standard Distances (As Measured from the Offgas Stack) (χ/q), sec/m^3

Miles

Sector*	4.3	4.4	4.5	4.6	4.7	4.8	4.9
N	3.65E-07	3.55E-07	3.41E-07	3.33E-07	3.25E-07	3.20E-07	3.12E-07
NNE	3.08E-07	3.00E-07	2.85E-07	2.79E-07	2.72E-07	2.66E-07	2.59E-07
NE	2.79E-07	2.69E-07	2.53E-07	2.53E-07	2.48E-07	2.41E-07	2.36E-07
ENE	3.36E-07	3.29E-07	3.12E-07	3.07E-07	3.00E-07	2.98E-07	2.91E-07
E	3.37E-07	3.28E-07	3.19E-07	3.11E-07	3.02E-07	2.95E-07	2.85E-07
ESE	2.98E-07	2.89E-07	2.80E-07	2.71E-07	2.63E-07	2.56E-07	2.48E-07
SE	3.32E-07	3.20E-07	3.10E-07	3.01E-07	2.92E-07	2.83E-07	2.75E-07
SSE	3.21E-07	3.11E-07	3.02E-07	2.92E-07	2.84E-07	2.75E-07	2.68E-07
S	4.03E-07	3.94E-07	3.87E-07	3.76E-07	3.65E-07	3.53E-07	3.43E-07
SSW	4.92E-07	4.81E-07	4.71E-07	4.57E-07	4.39E-07	4.26E-07	4.11E-07
SW	4.84E-07	4.79E-07	4.69E-07	4.54E-07	4.39E-07	4.25E-07	4.12E-07
WSW	4.89E-07	4.77E-07	4.66E-07	4.50E-07	4.35E-07	4.24E-07	4.11E-07
W	5.19E-07	5.03E-07	4.87E-07	4.73E-07	4.56E-07	4.43E-07	4.25E-07
WNW	5.78E-07	5.59E-07	5.41E-07	5.25E-07	5.09E-07	4.92E-07	4.78E-07
NW	4.29E-07	4.20E-07	4.11E-07	4.00E-07	3.88E-07	3.77E-07	3.66E-07
NNW	3.45E-07	3.32E-07	3.22E-07	3.15E-07	3.07E-07	2.98E-07	2.91E-07

Period of Record: 9-1-76 to 8-31-78

* Measured relevant to the Reactor Vent.

Table 13 Reactor Building Vent Dispersion Parameters for Short Term Elevated Releases ≤500 Hrs/Yr or ≤150 Hrs/Qtr (cont'd)

For Standard Distances (As Measured from the Offgas Stack) (χ/q), sec/m^3

Sector*	Miles 5.0
N	3.03E-07
NNE	2.52E-07
NE	2.30E-07
ENE	2.84E-07
E	2.82E-07
ESE	2.41E-07
SE	2.67E-07
SSE	2.62E-07
S	4.67E-07
SSW	4.00E-07
SW	3.99E-07
WSW	3.99E-07
W	4.12E-07
WNW	4.66E-07
NW	3.52E-07
NNW	2.78E-07

Period of Record: 9-1-76 to 8-31-78

* Measured relevant to the Reactor Vent.

Table 14 Reactor Building Vent Dispersion Parameters for Short Term Elevated Releases ≤500 Hrs/Yr or ≤150 Hrs/Qtr

For Standard Distances (As Measured from the Offgas Stack) (D/q), m^{-2}

Miles

Sector*	0.1	0.2	0.3	0.4	0.5	0.6	0.7
N	6.91E-07	2.69E-07	1.52E-07	1.01E-07	7.36E-08	5.53E-08	4.28E-08
NNE	5.55E-07	2.24E-07	1.30E-07	8.81E-08	6.33E-08	4.71E-08	3.65E-08
NE	3.90E-07	1.58E-07	9.37E-08	6.24E-08	4.48E-08	3.32E-08	2.59E-08
ENE	3.50E-07	1.43E-07	8.49E-08	5.71E-08	4.08E-08	3.02E-08	2.33E-08
E	4.63E-07	1.86E-07	1.10E-07	7.39E-08	5.16E-08	3.82E-08	2.91E-08
ESE	8.49E-07	3.27E-07	1.86E-07	1.21E-07	8.62E-08	6.33E-08	4.88E-08
SE	9.41E-07	3.56E-07	1.96E-07	1.29E-07	9.01E-08	6.69E-08	5.19E-08
SSE	9.60E-07	3.67E-07	2.02E-07	1.32E-07	9.36E-08	6.99E-08	5.40E-08
S	4.50E-07	1.79E-07	1.06E-07	7.18E-08	5.11E-08	3.80E-08	2.88E-08
SSW	3.27E-07	1.30E-07	7.81E-08	5.13E-08	3.67E-08	2.75E-08	2.15E-08
SW	4.13E-07	1.67E-07	9.51E-08	6.02E-08	4.24E-08	3.12E-08	2.46E-08
WSW	2.82E-07	1.14E-07	6.90E-08	4.53E-08	3.27E-08	2.46E-08	1.94E-08
W	3.06E-07	1.25E-07	7.41E-08	5.02E-08	3.55E-08	2.68E-08	2.10E-08
WNW	4.25E-07	1.69E-07	9.89E-08	6.61E-08	4.73E-08	3.52E-08	2.73E-08
NW	5.40E-07	2.12E-07	1.21E-07	7.91E-08	5.61E-08	4.23E-08	3.28E-08
NNW	6.42E-07	2.53E-07	1.42E-07	9.39E-08	6.65E-08	4.95E-08	3.87E-08

Period of Record: 9-1-76 to 8-31-78

* Measured relevant to the Offgas Stack.

Table 14 Reactor Building Vent Dispersion Parameters for Short Term Elevated Releases ≤500 Hrs/Yr or ≤150 Hrs/Qtr (cont'd)

For Standard Distances (As Measured from the Offgas Stack) (D/q), m^{-2}

Miles

Sector*	0.8	0.9	1.0	1.1	1.2	1.3	1.4
N	3.25E-08	2.57E-08	1.99E-08	1.61E-08	1.34E-08	1.13E-08	9.77E-09
NNE	2.79E-08	2.22E-08	1.71E-08	1.39E-08	1.16E-08	9.77E-09	8.45E-09
NE	1.99E-08	1.56E-08	1.23E-08	1.00E-08	8.52E-09	7.15E-09	6.20E-09
ENE	1.80E-08	1.41E-08	1.12E-08	9.11E-09	7.57E-09	6.45E-09	5.55E09
E	2.17E-08	1.70E-08	1.33E-08	1.07E-08	9.01E-09	7.69E-09	6.56E-09
ESE	3.78E-08	2.92E-08	2.35E-08	1.93E-08	1.59E-08	1.34E-08	1.16E-08
SE	3.99E-08	3.10E-08	2.48E-08	2.04E-08	1.67E-08	1.40E-08	1.20E-08
SSE	4.16E-08	3.26E-08	2.57E-08	2.12E-08	1.76E-08	1.48E-08	1.27E-08
S	2.26E-08	1.78E-08	1.41E-08	1.16E-08	9.75E-09	8.85E-09	7.48E-09
SSW	1.69E-08	1.34E-08	1.10E-08	9.02E-09	7.60E-09	6.52E-09	5.84E-09
SW	1.89E-08	1.51E-08	1.25E-08	1.01E-08	8.52E-09	7.27E-09	6.61E-09
WSW	1.52E-08	1.20E-08	1.01E-08	8.20E-09	6.85E-09	5.94E-09	5.35E-09
W	1.62E-08	1.31E-08	1.04E-08	8.64E-09	7.29E-09	6.19E-09	5.49E-09
WNW	2.16E-08	1.72E-08	1.36E-08	1.12E-08	9.47E-09	7.95E-09	7.18E-09
NW	2.49E-08	1.97E-08	1.55E-08	1.26E-08	1.07E-08	9.05E-09	7.82E-09
NNW	3.00E-08	2.36E-08	1.82E-08	1.49E-08	1.22E-08	1.05E-08	9.21E-09

Period of Record: 9-1-76 to 8-31-78

* Measured relevant to the Offgas Stack.

Table 14 Reactor Building Vent Dispersion Parameters for Short Term Elevated Releases ≤500 Hrs/Yr or ≤150 Hrs/Qtr (cont'd)

For Standard Distances (As Measured from the Offgas Stack) (D/q), m^{-2}

Miles

Sector*	1.5	1.6	1.7	1.8	1.9	2.0	2.1
N	8.90E-09	7.61E-09	6.62E-09	5.81E-09	5.23E-09	4.63E-09	4.13E-09
NNE	7.75E-09	6.61E-09	5.79E-09	5.10E-09	4.56E-09	4.07E-09	3.71E-09
NE	5.46E-09	4.54E-09	4.02E-09	3.69E-09	3.30E-09	2.93E-09	2.48E-09
ENE	4.71E-09	4.19E-09	3.73E-09	3.33E-09	2.98E-09	2.64E-09	2.40E-09
E	5.63E-09	4.93E-09	4.49E-09	3.96E-09	3.53E-09	3.18E-09	2.88E-09
ESE	1.01E-08	8.60E-09	7.60E-09	7.07E-09	6.28E-09	5.64E-09	5.07E-09
SE	1.03E-08	9.00E-09	7.94E-09	7.17E-09	6.48E-09	5.74E-09	5.17E-09
SSE	1.10E-08	9.30E-09	8.32E-09	7.72E-09	6.89E-09	6.20E-09	5.56E-09
S	6.89E-09	5.81E-09	5.11E-09	4.54E-09	4.06E-09	3.61E-09	3.30E-09
SSW	5.34E-09	4.70E-09	4.14E-09	3.63E-09	3.26E-09	3.21E-09	2.88E-09
SW	6.60E-09	5.31E-09	4.72E-09	4.14E-09	3.66E-09	3.56E-09	3.24E-09
WSW	4.91E-09	4.44E-09	3.92E-09	3.40E-09	3.03E-09	3.03E-09	2.76E-09
W	5.07E-09	4.44E-09	3.82E-09	3.36E-09	3.07E-09	2.96E-09	2.71E-09
WNW	6.67E-09	5.78E-09	5.06E-09	4.43E-09	3.92E-09	3.71E-09	3.34E-09
NW	6.67E-09	5.73E-09	5.26E-09	4.65E-09	4.11E-09	3.68E-09	3.35E-09
NNW	8.53E-09	7.30E-09	6.36E-09	5.58E-09	5.00E-09	4.42E-09	4.03E-09

Period of Record: 9-1-76 to 8-31-78

* Measured relevant to the Offgas Stack.

Table 14 Reactor Building Vent Dispersion Parameters for Short Term Elevated Releases ≤500 Hrs/Yr or ≤150 Hrs/Qtr (cont'd)

For Standard Distances (As Measured from the Offgas Stack) (D/q), m^{-2}

Miles

Sector*	2.2	2.3	2.4	2.5	2.6	2.7	2.8
N	3.75E-09	3.42E-09	3.11E-09	2.88E-09	2.68E-09	2.53E-09	2.38E-09
NNE	3.34E-09	3.06E-09	2.79E-09	2.55E-09	2.38E-09	2.20E-09	2.06E-09
NE	2.43E-09	2.21E-09	2.02E-09	1.89E-09	1.74E-09	1.61E-09	1.51E-09
ENE	2.18E-09	2.03E-09	1.85E-09	1.70E-09	1.57E-09	1.46E-09	1.36E-09
E	2.61E-09	2.41E-09	2.20E-09	2.02E-09	1.82E-09	1.71E-09	1.61E-09
ESE	4.60E-09	4.21E-09	3.84E-09	3.54E-09	3.28E-09	3.01E-09	2.80E-09
SE	4.71E-09	4.43E-09	4.07E-09	3.79E-09	3.49E-09	3.24E-09	3.02E-09
SSE	5.01E-09	4.58E-09	4.21E-09	3.86E-09	3.55E-09	3.28E-09	3.06E-09
S	2.95E-09	2.70E-09	2.50E-09	2.32E-09	2.15E-09	2.00E-09	1.86E-09
SSW	2.60E-09	2.45E-09	2.28E-09	2.06E-09	1.90E-09	1.75E-09	1.64E-09
SW	2.93E-09	2.72E-09	2.53E-09	2.29E-09	2.11E-09	1.96E-09	1.84E-09
WSW	2.48E-09	2.31E-09	2.16E-09	1.98E-09	1.81E-09	1.68E-09	1.56E-09
W	2.44E-09	2.29E-09	2.12E-09	1.93E-09	1.77E-09	1.66E-09	1.57E-09
WNW	3.09E-09	2.85E-09	2.67E-09	2.43E-09	2.25E-09	2.11E-09	1.98E-09
NW	3.06E-09	2.76E-09	2.58E-09	2.41E-09	2.25E-09	2.10E-09	1.98E-09
NNW	3.64E-09	3.26E-09	3.04E-09	2.85E-09	2.62E-09	2.45E-09	2.29E-09

Period of Record: 9-1-76 to 8-31-78

* Measured relevant to the Offgas Stack.

Table 14 Reactor Building Vent Dispersion Parameters for Short Term Elevated Releases ≤500 Hrs/Yr or ≤150 Hrs/Qtr (cont'd)

For Standard Distances (As Measured from the Offgas Stack) (D/q), m^{-2}

Miles

Sector*	2.9	3.0	3.1	3.2	3.3	3.4	3.5
N	2.23E-09	2.09E-09	1.96E-09	1.84E-09	1.74E-09	1.73E-09	1.63E-09
NNE	1.94E-09	1.82E-09	1.71E-09	1.61E-09	1.51E-09	1.42E-09	1.35E-09
NE	1.42E-09	1.33E-09	1.25E-09	1.17E-09	1.10E-09	1.03E-09	9.77E-10
ENE	1.28E-09	1.20E-09	1.11E-09	1.05E-09	9.92E-10	9.42E-10	8.97E-10
E	1.50E-09	1.43E-09	1.34E-09	1.26E-09	1.19E-09	1.11E-09	1.04E-10
ESE	2.60E-09	2.42E-09	2.29E-09	2.15E-09	2.00E-09	1.90E-09	1.79E-09
SE	2.84E-09	2.67E-09	2.50E-09	2.32E-09	2.18E-09	2.05E-09	1.93E-09
SSE	2.86E-09	2.69E-09	2.53E-09	2.34E-09	2.23E-09	2.10E-09	1.98E-09
S	1.74E-09	1.63E-09	1.64E-09	1.54E-09	1.48E-09	1.36E-09	1.29E-09
SSW	1.53E-09	1.44E-09	1.36E-09	1.29E-09	1.22E-09	1.16E-09	1.10E-09
SW	1.73E-09	1.61E-09	1.52E-09	1.43E-09	1.36E-09	1.27E-09	1.21E-09
WSW	1.46E-09	1.37E-09	1.29E-09	1.22E-09	1.15E-09	1.10E-09	1.04E-09
W	1.48E-09	1.40E-09	1.32E-09	1.24E-09	1.18E-09	1.10E-09	1.05E-09
WNW	1.84E-09	1.74E-09	1.61E-09	1.52E-09	1.42E-09	1.52E-09	1.56E-09
NW	1.83E-09	1.72E-09	1.67E-09	1.59E-09	1.53E-09	1.42E-09	1.36E-09
NNW	2.13E-09	2.01E-09	1.90E-09	1.79E-09	1.67E-09	1.57E-09	1.49E-09

Period of Record: 9-1-76 to 8-31-78

* Measured relevant to the Offgas Stack.

Table 14 Reactor Building Vent Dispersion Parameters for Short Term Elevated Releases ≤500 Hrs/Yr or ≤150 Hrs/Qtr (cont'd)

For Standard Distances (As Measured from the Offgas Stack) (D/q), m^{-2}

Miles

Sector*	3.6	3.7	3.8	3.9	4.0	4.1	4.2
N	1.55E-09	1.47E-09	1.40E-09	1.34E-09	1.29E-09	1.24E-09	1.20E-09
NNE	1.27E-09	1.21E-09	1.16E-09	1.09E-09	1.04E-09	1.03E-09	9.85E-10
NE	9.27E-10	8.82E-10	8.44E-10	8.04E-10	7.68E-10	7.48E-10	7.05E-10
ENE	8.50E-10	8.08E-10	7.71E-10	7.38E-10	7.01E-10	6.78E-10	6.48E-10
E	9.92E-10	9.39E-10	8.94E-10	8.83E-10	8.48E-10	8.09E-10	7.71E-10
ESE	1.71E-09	1.61E-09	1.53E-09	1.48E-09	1.42E-09	1.35E-09	1.29E-09
SE	1.83E-09	1.73E-09	1.64E-09	1.57E-09	1.50E-09	1.46E-09	1.44E-09
SSE	1.86E-09	1.76E-09	1.69E-09	1.65E-09	1.56E-09	1.49E-09	1.42E-09
S	1.20E-09	1.16E-09	1.11E-09	1.07E-09	1.03E-09	9.96E-10	9.67E-10
SSW	1.04E-09	9.85E-10	9.51E-10	9.16E-10	8.78E-10	8.46E-10	8.15E-10
SW	1.14E-09	1.08E-09	1.02E-09	9.62E-10	1.01E-09	9.88E-10	9.93E-10
WSW	9.89E-10	9.58E-10	9.19E-10	8.74E-10	8.35E-10	8.03E-10	7.53E-10
W	1.01E-09	9.61E-10	9.21E-10	8.85E-10	8.52E-10	8.21E-10	7.93E-10
WNW	1.49E-09	1.42E-09	1.34E-09	1.29E-09	1.23E-09	1.18E-09	1.14E-09
NW	1.28E-09	1.23E-09	1.19E-09	1.14E-09	1.10E-09	1.06E-09	1.03E-09
NNW	1.41E-09	1.34E-09	1.29E-09	1.22E-09	1.19E-09	1.14E-09	1.10E-09

Period of Record: 9-1-76 to 8-31-78

* Measured relevant to the Offgas Stack.

Table 14 Reactor Building Vent Dispersion Parameters for Short Term Elevated Releases ≤500 Hrs/Yr or ≤150 Hrs/Qtr (cont'd)

For Standard Distances (As Measured from the Offgas Stack) (D/q), m^{-2}

Miles

Sector*	4.3	4.4	4.5	4.6	4.7	4.8	4.9
N	1.13E-09	1.09E-09	1.05E-09	1.02E-09	9.85E-10	9.67E-10	9.40E-10
NNE	9.68E-10	9.29E-10	8.71E-10	8.40E-10	8.07E-10	7.79E-10	7.49E-10
NE	6.98E-10	6.63E-10	6.16E-10	6.06E-10	5.87E-10	5.62E-10	5.45E-10
ENE	6.19E-10	5.96E-10	5.55E-10	5.37E-10	5.17E-10	5.06E-10	4.86E-10
E	7.43E-10	7.10E-10	6.81E-10	6.53E-10	6.25E-10	6.01E-10	5.72E-10
ESE	1.24E-09	1.18E-09	1.13E-09	1.08E-09	1.04E-09	9.99E-10	9.57E-10
SE	1.38E-09	1.31E-09	1.26E-09	1.21E-09	1.16E-09	1.12E-09	1.07E-09
SSE	1.36E-09	1.30E-09	1.25E-09	1.18E-09	1.14E-09	1.09E-09	1.05E-09
S	9.28E-10	8.94E-10	8.64E-10	8.38E-10	8.12E-10	7.83E-10	7.60E-10
SSW	7.88E-10	7.61E-10	7.38E-10	7.17E-10	6.89E-10	6.70E-10	6.49E-10
SW	1.09E-09	1.06E-09	1.11E-09	1.07E-09	1.02E-09	9.83E-10	9.46E-10
WSW	7.39E-10	7.09E-10	7.33E-10	7.08E-10	6.86E-10	6.70E-10	6.50E-10
W	7.67E-10	7.44E-10	7.22E-10	7.02E-10	6.79E-10	6.61E-10	6.36E-10
WNW	1.10E-09	1.06E-09	1.02E-09	9.86E-10	9.55E-10	9.22E-10	8.94E-10
NW	9.96E-10	9.60E-10	9.27E-10	9.00E-10	8.73E-10	8.48E-10	8.24E-10
NNW	1.07E-09	1.02E-09	1.01E-09	9.77E-10	9.43E-10	9.13E-10	8.84E-10

Period of Record: 9-1-76 to 8-31-78

* Measured relevant to the Offgas Stack.

Table 14 Reactor Building Vent Dispersion Parameters for Short Term Elevated Releases ≤500 Hrs/Yr or ≤150 Hrs/Qtr (cont'd)

For Standard Distances (As Measured from the Offgas Stack) (D/q), m^{-2}

Sector*	Miles 5.0
N	9.09E-10
NNE	7.21E-10
NE	5.24E-10
ENE	4.68E-10
E	5.58E-10
ESE	9.19E-10
SE	1.04E-09
SSE	1.01E-09
S	1.29E-09
SSW	6.32E-10
SW	9.10E-10
WSW	6.32E-10
W	6.21E-10
WNW	8.70E-10
NW	7.93E-10
NNW	8.42E-10

Period of Record: 9-1-76 to 8-31-78

* Measured relevant to the Offgas Stack.

OFFSITE DOSE CALCULATION MANUAL - TABLE OF CONTENTS

SECTION		PAGE
1.0	RECORD OF REVISION	4
Table 1	Monticello Nuclear Generating Plant Site Meteorology - Stability Class A, Elevation 10 Meters	5
Table 2	Monticello Nuclear Generating Plant Site Meteorology - Stability Class B, Elevation 10 Meters	6
Table 3	Monticello Nuclear Generating Plant Site Meteorology - Stability Class C, Elevation 10 Meters	7
Table 4	Monticello Nuclear Generating Plant Site Meteorology - Stability Class D, Elevation 10 Meters	8
Table 5	Monticello Nuclear Generating Plant Site Meteorology - Stability Class E, Elevation 10 Meters	9
Table 6	Monticello Nuclear Generating Plant Site Meteorology - Stability Class F, Elevation 10 Meters	10
Table 7	Monticello Nuclear Generating Plant Site Meteorology - Stability Class G, Elevation 10 Meters	11
Table 8	Monticello Nuclear Generating Plant Site Meteorology - All Classes Combined Elevation 10 Meters	12
Table 9	Monticello Nuclear Generating Plant Site Meteorology - Stability Class A, Elevation 100 Meters	14
Table 10	Monticello Nuclear Generating Plant Site Meteorology - Stability Class B, Elevation 100 Meters	15
Table 11	Monticello Nuclear Generating Plant Site Meteorology - Stability Class C, Elevation 100 Meters	16
Table 12	Monticello Nuclear Generating Plant Site Meteorology - Stability Class D, Elevation 100 Meters	17

Prepared By:	
Reviewed By:	
OC Final Review Meeting:	Date:
Approved By Plant Manager:	Date:

FOR ADMINISTRATIVE USE ONLY			
3087 (DOCUMENT CHANGE, HOLD, AND COMMENT FORM) incorporated:_____			
Resp Supv: CHEM	Assoc Ref: CHEM-I	SR: N	Freq: 2 yrs
ARMS: ODCM-APP-B	Doc Type: 7030	Admin Initials:	Date:

l/plr

SECTION **PAGE**

Table 13 Monticello Nuclear Generating Plant Site Meteorology - Stability Class E, Elevation 100 Meters 18

Table 14 Monticello Nuclear Generating Plant Site Meteorology - Stability Class F, Elevation 100 Meters 19

Table 15 Monticello Nuclear Generating Plant Site Meteorology - Stability Class G, Elevation 100 Meters 20

Table 16 Monticello Nuclear Generating Plant Site Meteorology - All Classes Combined Elevation 100 Meters 21

1.0 RECORD OF REVISION

Revision No.	Date	Reason for Revision
0	October - 2000	Moved previous ODCM-07.01 and ODCM-08.01 tables of meterological data to this document.
1	November - 2001	Typo, replaced missing M in Monticello on Page 1 of Table of Content.

Table 1 Monticello Nuclear Generating Plant Site Meteorology - Stability Class A, Elevation 10 Meters

Frequency Distribution Tables, Hours at each Wind Speed and Direction

Period of record: 9-1-76 through 8-31-78

	Wind Speed (mph) at 10 Meter Level						
Direction	1 to 3	4 to 7	8 to 12	13 to 18	19 to 24	Above 24	Total
N	4	18	63	30	7	0	122
NNE	2	20	30	14	2	0	68
NE	1	13	21	26	2	2	65
NNE	1	14	16	4	0	0	35
E	0	28	40	12	0	0	80
ESE	3	33	50	5	6	0	97
SE	2	26	50	35	12	3	128
SSE	8	46	96	122	11	0	283
S	9	36	68	117	42	3	275
SSW	5	63	94	58	20	4	244
SW	4	35	64	32	5	3	143
WSW	3	25	74	26	0	0	128
W	0	29	47	18	1	0	95
WNW	4	34	73	79	14	0	204
NW	3	29	58	61	3	0	154
NNW	6	29	109	67	13	0	224
VAR	0	0	0	0	0	0	0

Total Hours This Class: 2350
Hours of Calm This Class: 5
Percent of All Data This Class: 14.27

Table 2 Monticello Nuclear Generating Plant Site Meteorology - Stability Class B, Elevation 10 Meters

Frequency Distribution Tables, Hours at each Wind Speed and Direction

Period of record: 9-1-76 through 8-31-78

	Wind Speed (mph) at 10 Meter Level						
Direction	1 to 3	4 to 7	8 to 12	13 to 18	19 to 24	Above 24	Total
N	2	14	19	4	0	1	40
NNE	4	10	8	5	0	0	27
NE	0	6	3	2	0	0	11
ENE	1	11	7	2	0	0	21
E	0	13	4	0	0	0	17
ESE	1	15	10	3	3	0	32
SE	0	9	9	9	0	0	27
SSE	2	12	9	9	0	0	32
S	2	13	21	7	1	0	44
SSW	1	22	19	4	0	0	46
SW	0	11	10	3	0	0	24
WSW	1	12	11	3	0	0	27
W	0	12	19	8	2	1	42
WNW	0	11	20	21	5	1	58
NW	1	8	22	13	3	0	47
NNW	1	8	40	26	4	1	80
VAR	0	0	0	0	0	0	0

Total Hours This Class: 575
Hours of Calm This Class: 0
Percent of All Data This Class: 3.49

Table 3 Monticello Nuclear Generating Plant Site Meteorology - Stability Class C, Elevation 10 Meters

Frequency Distribution Tables, Hours at each Wind Speed and Direction

Period of record: 9-1-76 through 8-31-78

	Wind Speed (mph) at 10 Meter Level						
Direction	1 to 3	4 to 7	8 to 12	13 to 18	19 to 24	Above 24	Total
N	0	12	16	8	0	0	36
NNE	3	13	13	4	1	0	34
NE	2	10	11	5	2	0	30
ENE	1	19	4	2	0	0	26
E	0	8	10	2	0	0	20
ESE	2	14	12	5	2	0	35
SE	0	12	16	9	0	0	37
SSE	0	10	21	8	0	0	39
S	6	12	28	18	3	0	67
SSW	3	16	12	3	2	1	37
SW	3	11	14	3	1	0	32
WSW	2	5	11	2	0	0	20
W	4	22	19	5	1	0	51
WNW	4	23	38	19	3	0	87
NW	3	17	18	30	4	0	72
NNW	2	22	40	27	5	1	97
VAR	0	0	0	0	0	0	0

Total Hours This Class: 720
Hours of Calm This Class: 0
Percent of All Data This Class: 4.37

Table 4 Monticello Nuclear Generating Plant Site Meteorology - Stability Class D, Elevation 10 Meters

Frequency Distribution Tables, Hours at each Wind Speed and Direction

Period of record: 9-1-76 through 8-31-78

	Wind Speed (mph) at 10 Meter Level						
Direction	1 to 3	4 to 7	8 to 12	13 to 18	19 to 24	Above 24	Total
N	9	107	135	39	1	0	291
NNE	32	132	87	18	1	0	270
NE	37	129	116	50	3	0	335
ENE	43	153	66	30	1	0	293
E	29	125	64	27	0	0	245
ESE	28	107	148	60	4	0	347
SE	16	103	153	36	2	0	310
SSE	13	97	103	35	2	0	250
S	19	84	96	33	1	0	233
SSW	16	73	70	19	6	1	185
SW	19	58	52	10	4	0	143
WSW	14	69	63	14	2	1	163
W	16	79	98	33	3	5	234
WNW	13	112	262	159	25	2	573
NW	17	82	255	232	61	3	650
NNW	19	104	247	246	49	1	666
VAR	0	0	0	0	0	0	0

Total Hours This Class: 5198
Hours of Calm This Class: 10
Percent of All Data This Class: 31.56

Table 5 Monticello Nuclear Generating Plant Site Meteorology - Stability Class E, Elevation 10 Meters

Frequency Distribution Tables, Hours at each Wind Speed and Direction

Period of record: 9-1-76 through 8-31-78

	Wind Speed (mph) at 10 Meter Level						
Direction	1 to 3	4 to 7	8 to 12	13 to 18	19 to 24	Above 24	Total
N	20	98	57	6	0	0	181
NNE	43	81	35	2	0	0	161
NE	35	94	41	6	2	0	178
ENE	50	122	29	10	0	0	211
E	36	109	40	2	0	0	187
ESE	26	117	46	6	0	0	195
SE	19	111	136	18	2	0	286
SSE	20	95	116	33	1	0	265
S	22	84	144	43	1	0	294
SSW	22	72	99	25	9	0	227
SW	23	84	57	10	2	0	176
WSW	37	86	44	4	0	0	171
W	30	156	123	12	4	0	325
WNW	24	195	233	41	2	0	495
NW	20	133	247	84	0	0	484
NNW	25	145	217	38	1	0	426
VAR	0	0	0	0	0	0	0

Total Hours This Class:	4269
Hours of Calm This Class:	7
Percent of All Data This Class:	25.92

Table 6 Monticello Nuclear Generating Plant Site Meteorology - Stability Class F, Elevation 10 Meters

Frequency Distribution Tables, Hours at each Wind Speed and Direction

Period of record: 9-1-76 through 8-31-78

	Wind Speed (mph) at 10 Meter Level						
Direction	1 to 3	4 to 7	8 to 12	13 to 18	19 to 24	Above 24	Total
N	30	62	3	0	0	0	95
NNE	37	54	0	0	0	0	91
NE	29	29	0	0	0	0	58
ENE	32	28	0	0	0	0	60
E	32	59	5	0	0	0	96
ESE	25	97	11	0	0	0	133
SE	22	83	19	0	0	0	124
SSE	16	122	12	0	0	0	150
S	24	93	31	3	0	0	151
SSW	27	67	14	0	0	0	108
SW	27	52	7	0	0	0	86
WSW	52	68	8	0	0	0	128
W	51	91	14	0	0	0	156
WNW	28	68	9	0	0	0	105
NW	36	67	12	0	0	0	115
NNW	30	119	29	0	0	0	178
VAR	0	0	0	0	0	0	0

Total Hours This Class:	1847
Hours of Calm This Class:	13
Percent of All Data This Class:	11.21

Table 7 Monticello Nuclear Generating Plant Site Meteorology - Stability Class G, Elevation 10 Meters

Frequency Distribution Tables, Hours at each Wind Speed and Direction

Period of record: 9-1-76 through 8-31-78

	Wind Speed (mph) at 10 Meter Level						
Direction	1 to 3	4 to 7	8 to 12	13 to 18	19 to 24	Above 24	Total
N	45	31	0	0	0	0	76
NNE	40	16	0	0	0	0	56
NE	33	12	0	0	0	0	45
ENE	31	5	0	0	0	0	36
E	46	18	0	0	0	0	64
ESE	47	54	2	0	0	0	103
SE	52	34	1	1	0	0	88
SSE	67	111	3	6	0	0	187
S	64	109	23	2	0	0	198
SSW	61	65	10	2	0	0	138
SW	43	32	1	0	0	0	76
WSW	77	37	0	0	0	0	114
W	53	31	0	0	0	0	84
WNW	37	13	2	0	0	0	52
NW	49	15	3	4	0	0	71
NNW	47	48	2	0	0	0	97
VAR	0	0	0	0	0	0	0

Total Hours This Class: 1512
Hours of Calm This Class: 27
Percent of All Data This Class: 9.18

Table 8 Monticello Nuclear Generating Plant Site Meteorology - All Classes Combined
Elevation 10 Meters

Frequency Distribution Tables, Hours at each Wind Speed and Direction

Period of record: 9-1-76 through 8-31-78

	Wind Speed (mph) at 10 Meter Level						
Direction	1 to 3	4 to 7	8 to 12	13 to 18	19 to 24	Above 24	Total
N	110	342	293	87	8	1	841
NNE	161	326	173	43	4	0	707
NE	137	293	192	89	9	2	722
ENE	159	352	122	48	1	0	682
E	143	360	163	43	0	0	709
ESE	132	437	279	79	15	0	942
SE	111	378	384	108	16	3	1000
SSE	126	493	360	213	14	0	1206
S	146	431	411	223	48	3	1262
SSW	135	378	318	111	37	6	985
SW	119	283	205	58	12	3	680
WSW	186	302	211	49	2	1	751
W	154	420	320	76	11	6	987
WNW	110	456	637	319	49	3	1574
NW	129	351	615	424	71	3	1593
NNW	130	475	684	404	72	3	1768
VAR	0	0	0	0	0	0	0

Table 8 Monticello Nuclear Generating Plant Site Meteorology - All Classes Combined
Elevation 10 Meters (cont'd)

Frequency Distribution Tables, Hours at each Wind Speed and Direction

Period of record: 9-1-76 through 8-31-78

Data Recovery for the Period

Total Hours:	17520
Hours of Calm:	62
Hours of Bad Data:	1049
Percent Data Recovery:	94.01

Percent Acceptable Observations in each Stability Class

Class A	14.27
Class B	3.49
Class C	4.37
Class D	31.56
Class E	25.92
Class F	11.21
Class G	9.18

Average Wind Speed for each Wind Category

1 to 3 MPH	2.5
4 to 7 MPH	5.5
8 to 12 MPH	9.7
13 to 18 MPH	14.7
19 to 24 MPH	20.6
Above 24 MPH	27.2

Table 9 Monticello Nuclear Generating Plant Site Meteorology - Stability Class A, Elevation 100 Meters

Frequency Distribution Tables, Hours at each Wind Speed and Direction

Period of record: 9-1-76 through 8-31-78

	Wind Speed (mph) at 100 Meter Level						
Direction	1 to 3	4 to 7	8 to 12	13 to 18	19 to 24	Above 24	Total
N	0	1	2	10	1	0	14
NNE	0	1	1	1	0	0	3
NE	0	0	1	0	0	0	1
ENE	0	0	0	0	1	0	1
E	0	1	4	0	0	0	5
ESE	0	0	4	0	0	0	4
SE	0	0	4	8	0	6	18
SSE	0	1	5	42	36	15	99
S	0	1	3	28	35	12	79
SSW	0	1	10	37	53	39	140
SW	0	0	4	19	6	5	36
WSW	0	0	3	16	10	1	30
W	0	0	0	7	2	0	9
WNW	0	0	2	4	1	2	9
NW	0	0	3	6	6	3	18
NNW	0	0	1	14	4	0	19
VAR	0	0	0	0	0	0	0

Total Hours This Class: 489
Hours of Calm This Class: 4
Percent of All Data This Class: 2.95

Table 10 Monticello Nuclear Generating Plant Site Meteorology - Stability Class B, Elevation 100 Meters

Frequency Distribution Tables, Hours at each Wind Speed and Direction

Period of record: 9-1-76 through 8-31-78

	Wind Speed (mph) at 100 Meter Level						
Direction	1 to 3	4 to 7	8 to 12	13 to 18	19 to 24	Above 24	Total
N	0	3	13	18	3	0	37
NNE	0	6	3	9	2	2	22
NE	0	1	7	6	0	0	14
ENE	0	2	3	7	2	0	14
E	0	2	15	1	0	0	18
ESE	0	5	17	3	0	2	27
SE	1	7	15	9	2	2	36
SSE	1	9	28	12	8	2	60
S	0	5	23	18	3	0	49
SSW	0	8	23	17	5	2	60
SW	0	7	18	8	5	1	39
WSW	0	7	8	14	2	1	32
W	0	4	8	18	5	0	35
WNW	0	4	12	17	7	6	46
NW	1	5	14	23	12	5	60
NNW	0	1	8	25	11	2	47
VAR	0	0	0	0	0	0	0

Total Hours This Class: 602
Hours of Calm This Class: 6
Percent of All Data This Class: 3.64

Table 11 Monticello Nuclear Generating Plant Site Meteorology - Stability Class C, Elevation 100 Meters

Frequency Distribution Tables, Hours at each Wind Speed and Direction

Period of record: 9-1-76 through 8-31-78

	Wind Speed (mph) at 100 Meter Level						
Direction	1 to 3	4 to 7	8 to 12	13 to 18	19 to 24	Above 24	Total
N	3	9	26	25	13	2	78
NNE	2	12	14	14	8	2	52
NE	1	7	9	8	2	0	27
ENE	0	5	12	6	1	0	24
E	0	13	19	1	2	0	35
ESE	0	13	25	11	1	1	51
SE	2	17	12	8	4	0	43
SSE	0	26	38	19	10	2	95
S	0	15	23	13	7	4	62
SSW	0	28	33	23	11	2	97
SW	0	20	24	17	4	0	65
WSW	3	17	27	14	3	1	65
W	3	10	20	14	8	3	58
WNW	3	10	16	27	18	9	83
NW	2	8	22	38	26	10	106
NNW	2	3	16	42	19	8	90
VAR	0	0	0	0	0	0	0

Total Hours This Class: 1041
Hours of Calm This Class: 10
Percent of All Data This Class: 4.29

Table 12 Monticello Nuclear Generating Plant Site Meteorology - Stability Class D, Elevation 100 Meters

Frequency Distribution Tables, Hours at each Wind Speed and Direction

Period of record: 9-1-76 through 8-31-78

	Wind Speed (mph) at 100 Meter Level						
Direction	1 to 3	4 to 7	8 to 12	13 to 18	19 to 24	Above 24	Total
N	11	51		95	181	130	82
NNE	11	41	106	120	50	12	340
NE	15	53	105	93	25	8	299
ENE	14	41	131	83	59	12	340
E	18	61	103	62	38	6	288
ESE	17	55	101	85	47	31	336
SE	13	57	108	152	68	23	421
SSE	9	63	119	148	71	17	427
S	16	61	95	122	61	8	363
SSW	14	61	85	120	46	34	360
SW	14	54	80	74	32	11	265
WSW	13	52	69	44	21	11	210
W	8	45	89	59	29	17	247
WNW	14	51	141	165	77	62	510
NW	7	50	170	366	312	143	1048
NNW	12	52	176	312	350	229	1131
VAR	0	0	0	0	0	0	0

Total Hours This Class: 7264
Hours of Calm This Class: 129
Percent of All Data This Class: 43.87

Table 13 Monticello Nuclear Generating Plant Site Meteorology - Stability Class E, Elevation 100 Meters

Frequency Distribution Tables, Hours at each Wind Speed and Direction

Period of record: 9-1-76 through 8-31-78

	Wind Speed (mph) at 100 Meter Level						
Direction	1 to 3	4 to 7	8 to 12	13 to 18	19 to 24	Above 24	Total
N	4	17	59	99	82	11	272
NNE	7	18	37	68	32	3	165
NE	4	16	47	58	20	2	147
ENE	4	33	68	93	27	9	234
E	4	27	64	75	15	2	187
ESE	5	20	46	74	37	11	193
SE	10	23	63	97	58	3	254
SSE	5	22	58	94	105	16	300
S	5	13	57	140	97	20	332
SSW	2	25	49	115	125	22	338
SW	7	24	67	102	84	18	302
WSW	3	19	42	73	37	8	182
W	5	20	47	55	35	2	164
WNW	4	18	63	136	93	13	327
NW	6	15	71	172	141	12	417
NNW	3	27	86	244	198	17	575
VAR	0	0	0	0	0	0	0

Total Hours This Class: 4433
Hours of Calm This Class: 44
Percent of All Data This Class: 26.77

Table 14 Monticello Nuclear Generating Plant Site Meteorology - Stability Class F, Elevation 100 Meters

Frequency Distribution Tables, Hours at each Wind Speed and Direction

Period of record: 9-1-76 through 8-31-78

	Wind Speed (mph) at 100 Meter Level						
Direction	1 to 3	4 to 7	8 to 12	13 to 18	19 to 24	Above 24	Total
N	3	12	28	45	28	0	116
NNE	2	4	15	39	16	1	77
NE	4	7	23	49	17	1	101
ENE	1	7	19	40	6	3	76
E	4	10	26	15	3	0	58
ESE	8	16	28	31	14	2	99
SE	2	7	28	46	19	5	107
SSE	2	8	25	62	40	1	138
S	1	12	30	60	36	1	140
SSW	1	11	28	58	57	4	159
SW	3	14	19	75	33	2	146
WSW	5	6	22	28	29	0	90
W	1	14	22	27	16	0	80
WNW	4	10	44	49	27	1	135
NW	4	12	37	87	29	0	169
NNW	4	14	38	51	21	1	129
VAR	0	0	0	0	0	0	0

Total Hours This Class: 1826
Hours of Calm This Class: 6
Percent of All Data This Class: 11.03

Table 15 Monticello Nuclear Generating Plant Site Meteorology - Stability Class G, Elevation 100 Meters

Frequency Distribution Tables, Hours at each Wind Speed and Direction

Period of record: 9-1-76 through 8-31-78

	Wind Speed (mph) at 100 Meter Level						
Direction	1 to 3	4 to 7	8 to 12	13 to 18	19 to 24	Above 24	Total
N	6	8	16	9	0	0	39
NNE	3	12	15	8	1	0	39
NE	4	6	11	16	4	0	41
ENE	6	11	15	11	3	1	47
E	8	7	11	11	1	0	38
ESE	1	12	9	16	2	0	40
SE	5	9	10	5	9	1	39
SSE	6	6	12	8	11	1	44
S	2	6	13	30	12	1	64
SSW	1	14	26	55	21	0	117
SW	1	9	21	26	25	3	85
WSW	5	16	29	16	14	0	80
W	3	14	8	16	18	2	61
WNW	5	15	23	21	9	0	73
NW	2	7	14	17	1	0	41
NNW	8	13	21	7	5	0	54
VAR	0	0	0	0	0	0	0

Total Hours This Class:	904
Hours of Calm This Class:	2
Percent of All Data This Class:	5.46

Table 16 Monticello Nuclear Generating Plant Site Meteorology - All Classes Combined
Elevation 100 Meters

Frequency Distribution Tables, Hours at each Wind Speed and Direction

Period of record: 9-1-76 through 8-31-78

	Wind Speed (mph) at 100 Meter Level						
Direction	1 to 3	4 to 7	8 to 12	13 to 18	19 to 24	Above 24	Total
N	27	101	239	387	257	95	1106
NNE	25	94	191	259	109	20	698
NE	28	90	203	230	68	11	630
ENE	25	99	248	240	99	25	736
E	34	121	242	165	59	8	629
ESE	31	121	230	220	101	47	750
SE	33	120	240	325	160	40	918
SSE	23	135	285	385	281	54	1163
S	24	113	244	411	251	46	1089
SSW	18	148	259	425	318	103	1271
SW	25	128	233	321	191	40	938
WSW	29	117	200	205	116	22	689
W	20	107	194	196	113	24	654
WNW	30	108	301	419	232	93	1183
NW	22	97	331	709	527	173	1859
NNW	29	110	346	695	608	257	2045
VAR	0	0	0	0	0	0	0

Table 16 Monticello Nuclear Generating Plant Site Meteorology - All Classes Combined Elevation 100 Meters (cont'd)

Frequency Distribution Tables, Hours at each Wind Speed and Direction

Period of record: 9-1-76 through 8-31-78

Data Recovery for the Period

Total Hours:	17520
Hours of Calm:	201
Hours of Bad Data:	961
Percent Data Recovery:	94.51

Percent Acceptable Observations in each Stability Class

Class A	2.95
Class B	3.64
Class C	6.29
Class D	43.87
Class E	26.77
Class F	11.03
Class G	5.46

Average Wind Speed for each Wind Category

1 to 3 MPH	2.5
4 to 7 MPH	5.8
8 to 12 MPH	10.1
13 to 18 MPH	15.4
19 to 24 MPH	20.9
Above 24 MPH	28.1

OFFSITE DOSE CALCULATION MANUAL - TABLE OF CONTENTS

SECTION		PAGE
1.0	RECORD OF REVISION	2
Table 1	Parameters for Cow and Goat Milk Pathways	3
Table 2	Parameters for the Cow Meat Pathway	4
Table 3	Parameters for the Vegetable Pathway	5

Prepared By:	
Reviewed By:	
OC Final Review Meeting:	Date:
Approved By Plant Manager:	Date:

FOR ADMINISTRATIVE USE ONLY			
3087 (DOCUMENT CHANGE, HOLD, AND COMMENT FORM) incorporated:_____			
Resp Supv: CHEM	Assoc Ref: CHEM-I	SR: N	Freq: 2 yrs
ARMS: ODCM-APP-C	Doc Type: 7030	Admin Initials:	Date:

l/plr

1.0 RECORD OF REVISION

Revision No.	Date	Reason for Revision
0	October - 2000	Moved previous ODCM-10.01 tables of parameters to this document.

Table 1 Parameters for Cow and Goat Milk Pathways

Parameter	Value	Reference in Reg. Guide 1.109 Rev. 1
Q_F (kg/day)	50 (cow) 6 (goat)	Table E-3 Table E-3
t_f (seconds)	1.73×10^5 (2 days)	Table E-15
r	1.0 (radioiodines) 0.2 (particulates)	Table E-15 Table E-15
$(DFL_i)_a$ (mrem/pCi)	Each radionuclide	Table E-11 to E-14
F_m (pCi/day per pCi/liter)	Each stable element	Table E-1 (cow) Table E-2 (goat)
t_b (seconds)	4.73×10^8 (15 yr)	Table E-15
Y_s(kg/m^2)	2.0	Table E-15
Y_p (kg/m^2)	.75	Table E-15
t_h (seconds)	7.78×10^6 (90 days)	Table E-15
U_{ap} (liters/yr)	330 infant 330 child 400 teen 310 adult	Table E-5 Table E-5 Table E-5 Table E-5
t_{ep} (seconds)	2.59×10^6 (pasture)	Table E-15
t_{es} (seconds)	5.18×10^6 (stored feed)	Table E-15
B_{iv} (pCi/kg (wet weight) per pCi/kg (dry soil))	Each stable element	Table E-1
P (kg dry soil/m^2)	240	Table E-15

Table 2 Parameters for the Cow Meat Pathway

Parameter	Value	Reference in Reg. Guide 1.109 Rev. 1
r	1.0 (radioiodines) 0.2 (particulates)	Table E-15 Table E-15
F_f (pCi/kg per pCi/day)	Each stable element	Table E-1
U_{ap} (kg/yr)	0 infant 41 child 65 teen 110 adult	Table E-5 Table E-5 Table E-5 Table E-5
$(DFL_i)_a$ (mrem/pCi)	Each radionuclide	Table E-11 to E-14
Y_p (kg/m^2)	0.7	Table E-15
Y_s(kg/m^2)	2.0	Table E-15
t_b (seconds)	4.73×10^8 (15 yr)	Table E-15
t_s (seconds)	1.73×10^6 (20 days)	Table E-15
t_h (seconds)	7.78×10^6 (90 days)	Table E-15
t_{ep} (seconds)	2.59×10^6 (pasture)	Table E-15
t_{es} (seconds)	5.18×10^6 (stored feed)	Table E-15
Q_F (kg/day)	50	Table E-3
B_{iv} (pCi/kg (wet weight) per pCi/kg (dry soil))	Each stable element	Table E-1
P (kg dry soil/m^2)	240	Table E-15

Table 3 Parameters for the Vegetable Pathway

Parameter	Value	Reference in Reg. Guide 1.109 Rev. 1
r (dimensionless)	1.0 (radioiodines) 0.2 (particulates)	Table E-1 Table E-1
$(DFL_i)_a$ (mrem/Ci)	Each radionuclide	Tables E-11 to E-14
U^L_a (kg/yr)	0 Infant 26 Child 42 Teen 64 Adult	Table E-5 Table E-5 Table E-5 Table E-5
U^s_a (kg/yr)	0 Infant 520 Child 630 Teen 520 Adult	Table E-5 Table E-5 Table E-5 Table E-5
t_L (seconds)	8.6×10^4 (1 day)	Table E-15
t_h (seconds)	5.18×10^6 (60 days)	Table E-15
Y_v (kg/m2)	2.0	Table E-15
t_e (seconds)	5.18×10^6 (60 days)	Table E-15
t_b (seconds)	4.73×10^8 (15 yr)	Table E-15
P (kg/(dry soil)/m2)	240	Table E-15
B_{iv} (pCi/kg(wet weight) per pCi/kg (dry soil))	Each stable element	Table E-1

RECORD OF REVISION

Revision No.	Date	Reason for Revision
0	May 2, 1979	Original.
1	February 29, 1980	Incorporation of NRC Staff comments and correction of miscellaneous errors.
2	July 23, 1982	Incorporation of NRC Staff comments, addition of short term vent dispersion parameters, and addition of Appendices D and E.
3	March 24, 1983	Change in milk sampling location.
4	December 12, 1983	Change in milk sampling locations and remove formula for converting µCi/sec to mrad/hr for stack and vent wide range gas monitors.
5	March 27, 1984	Change Table 3.2-1
6	January - 1988	Incorporation of MIDAS and complete retyping.
7	January - 1990	Incorporation of NRC staff comments, correction of miscellaneous errors, clarification of term abnormal release and addition of references to MNGP ODCM computer program.
0	November - 1993	Complete rewrite of ODCM creating modular format allowing changes of a section rather than the whole document.

"Record of Revision" is now incorporated into each individual procedure.

Prepared By:	
Reviewed By:	
OC Final Review Meeting:	Date:
Approved By Plant Manager:	Date:

FOR ADMINISTRATIVE USE ONLY			
3087 (DOCUMENT CHANGE, HOLD, AND COMMENT FORM) incorporated:_____			
Resp Supv: CHEM	Assoc Ref: CHEM-I	SR: N	Freq: 2 yrs
ARMS: ODCM-HISTORY	Doc Type: 7030	Admin Initials:	Date:

l/plr