(7) CASx (CASA or CASB) accident signal (after 5 second delay via BBRX relay) — -122" RxVL OR 2.45 DWP AND < 450# RPV

I. 4kV Shutdown Boards (Normal Power Seeking) — Refer to prints 15E-500 series Key Diagram of STDBY Aux. Power System Obj. V.B.6.c Obj. V.C.1.c Obj. V.D.6.c

1. Power sources

a. 4kV supplies to each U1/2 Shutdown Board: are as follows:

Board	NORMAL Supply
A	Shutdown Bus 1
B	Shutdown Bus 1
C	Shutdown Bus 2
D	Shutdown Bus 2

The first alternate is from the other Shutdown Bus. The second alternate is from the diesel generator. The third alternate is from the U3 diesel generators via a U3 Shutdown Board.

SBO
3 ½ via bustie board
½ ½ via other SD Bus

b. There are two possible 4kV supplies to each U3 Shutdown Board:

Board	NORMAL Supply
3EA	Unit Board 3A
3EB	Unit Board 3A
3EC	Unit Board 3B
3ED	Unit Board 3B

(1) The first alternate is from the diesel generators. The U1/2 diesel generators cannot supply power to the U3 Shutdown Boards alone. They may, however, be paralleled with the U3 diesel generators for backfeed operation. The tie breaker off the unit 3 Shutdown Board is interlocked as follows:

7. Shutdown Board Transfer Scheme

a. The only automatic transfer of power on a shutdown board is a delayed (slow) transfer. In order for the transfer to take place, the bus transfer control switch (43Sx) must be in AUTOMATIC.

Obj. V.B.8.c
Obj. V.C.2.c
Obj. V.D.8.c
Procedural Adherence when transferring boards

(1) Undervoltage is sensed on the line side of the normal feeder breaker.

(2) Voltage is available on the line side of the alternate feeder breaker.

(3) The normal feeder breaker then receives a trip signal.

(4) A 52b contact on the normal supply breaker shuts in the close circuit of the alternate feeder breaker, indicating that the normal breaker is open.

(5) A residual voltage relay shuts in the close circuit of the alternate supply breaker, indicating that board voltage has decayed to less than 30 percent of normal.

(6) The alternate supply breaker then closes.
The shutdown board transfer scheme is NORMAL seeking. If power is restored to the line side of the normal feeder breaker, and if the 43Sx switch is still in AUTOMATIC, then a "slow" transfer back to the normal supply will occur. This will cause momentary power loss to loads on the bus and ESF actuations are possible.

**b Manual High Speed (Fast Transfer)

Obj. V.B.8.c
Obj. V.C.2.c
Review INPO SOER 83-06

To fast transfer a shutdown board perform the following:

(1)	Ensure voltage is available from the alternate source.	Procedural Adherence
(2)	Place 43Sx switch to MANUAL.	
(3)	Place alternate breaker SYNC switch to ON.	Self Check
(4)	Place alternate supply breaker switch in CLOSE.	
(5)	Place normal supply breaker switch in TRIP.	
(6)	Alternate breaker closes when 52b contact from normal breaker closes, indicating that breaker has opened. If the Alternate Supply from SD Bus is closed to a Unit 1/2 S/D Board, an Accident Signal will trip it open.	Alternate supply is not a qualified Off-site supply
(7)	Turn off SYNC switch.	
(8)	DO NOT place 43Sx switch back to AUTOMATIC (Transfer back to normal supply would occur).	
Note:	If the SYNC SW was not ON for the alternate breaker, a delayed transfer would occur when the normal breaker opens and the board residual voltage relay detects less than 30% voltage, assuming the alternate breaker's control switch is held in the CLOSE position.	Self Check

c. Conditions which automatically trip the board transfer control switch (43Sx) to MANUAL:

(1)	Normal Feeder Lockout Relay (86-xxx)	
(2)	Alternate Feeder Lockout Relay (86-xxx)	
(3)	Normal Feeder Control Transfer Switch in EMERGENCY	
(4)	Alternate Feeder Control Transfer Switch in EMERGENCY	-122" RxVL <u>OR</u> 2.45 DWP <u>AND</u> < 450# RPV
(5)	CASx accident signal	

20. RO 262002A1.02 001/C/A/T2/G1/UNIT PREFFERRED/C/A 2.5/2.9/262002AA1.02/BF05301/RO/SRO/10/27/2007

Given the following plant conditions:

- Unit 3 is in a normal lineup.
- The following alarm is received:

  - UNIT PFD SUPPLY ABNORMAL

- It is determined that the alarm is due to the Unit-3 Unit Preferred AC Generator Overvoltage condition

Which ONE of the following describes the correct result of this condition? Assume NO Operator actions.

A. Unit 3 bkr 1001 trips open; Unit 2 bkr 1003 interlocked open; the MMG set automatically shuts down.

B. Unit 3 bkr 1001 interlocked open; Unit 2 bkr 1003 trips open; the MMG set automatically shuts down.

C. Unit 3 bkr 1001 trips open; Unit 2 bkr 1003 interlocked open; the MMG set continues to run without excitation.

D. Unit 3 bkr 1001 interlocked open; Unit 2 bkr 1003 trips open; the MMG set continues to run without excitation.

K/A Statement:
262002 UPS (AC/DC)
K/A: A1.02 Ability to predict and/or monitor changes in parameters associated with operating the UNINTERRUPTABLE POWER SUPPLY (A.C./D.C.) controls including: Motor generator outputs.

K/A Justification: This question satisfies the K/A statement by requiring the candidate to correctly apply a specific operating condition of the UPS MMG Set to the correct response of the system to that condition.

References: OPL171.102, Rev.6, pg 20 & 21, 3-ARP-9-8B, Rev.9, tile 35

Level of Knowledge Justification: This question is rated as C/A due to the requirement to assemble, sort, and integrate the parts of the question to solve a problem. This requires mentally using this knowledge and its meaning to resolve the problem.

0610 NRC Exam

REFERENCE PROVIDED: None

Plausibility Analysis:

In order to answer this question correctly the candidate must determine the following:

1. The 1001 and 1003 breakers from an MMG set will trip on overvoltage or underfrequency at the output of the MMG.
2. Unit 2 MMG Breakers are interlocked to prevent alternate power to unit 1 and 3 at the same time.
3. When an overvoltage condition exists at the Generator Output, the 1001 breaker from the MMG Set trips.
4. Excitation is lost and the MMG Set continues to run.
5. The *Hold to build up voltage* switch must be depressed to restore voltage.Also

A is incorrect. The MMG set does not automatically shut down. This is plausible because the breaker lineup is correct.

B is incorrect. The MMG set does not automatically shut down. This is plausible although the breaker lineup is backwards.

C is correct.

D is incorrect. The breaker lineup is backwards. This is plausible because the MMG Set will continue to run without excitation.

UNIT PFD SUPPLY ABNORMAL	35

(Page 1 of 1)

Sensor/Trip Point:

Relay SE - loss of normal DC power source.
Relay TS - DC Xfer switch transfers to Emergency DC Power Source.
Regulating Transformer Common Alarm.
1-INV-252-001, INVT-1 System Common Alarm.

Sensor Location: EL 593' 250V DC Battery Board 2

Probable Cause:

A. Loss of normal DC power source
B. DC power transfer.
C. Relay failure
D. INVT-1 System Common Alarms
   1. Fan Failure Rectifier
   2. Over temperature Rectifier
   3. AC Power Failure to Rectifier
   4. Low DC Voltage
   5. High DC Voltage
   6. Low DC Disconnect
   7. Fan Failure Inverter
   8. Alternate Source Failure
   9. :Low AC Output Voltage
   10. High Output Voltage
   11. Inverter Fuse Blown
   12. Static Switch Fuse Blown
   13. Over Temperature Inverter

E. PFD Regulating XFMR Common Alarms
   1. Transformer Over temperature
   2. Fan Failure
   3. CB1 Breaker Trip
   4. CB2 Breaker Trip

Automatic Action:

A. Auto transfer to DC Power Source on Rectifier failure.
B. Auto transfer to Alternate AC supply (Regulated Transformer) on Inverter failure.

Operator Action:

A. **IF** 120V AC Unit Preferred is lost, **THEN**
   REFER TO 1-AOI-57-4, Loss of Unit Preferred. ☐
B. **REFER TO** appropriate portion of 0-OI-57C, 208V/120V AC Electrical System. ☐

References:

0-45E641-2	1-45E620-11	1-3300D15A4585-1
10-100467	0-20-100756	20-110437

(d) Another Unit's MMG set

The second alternate is from another unit's MMG set output. Unit 2 MMG is the second alternate for either Unit 1 or Unit 3; Unit 3 is the second alternate for Unit 2. Transfers to this source are done manually at Battery Board 2 panel 11.

b. MMG Sets (Unit 2&3)

Obj. V.B.2.b
TP-11
Obj.V.D.2.c
Obj.V.D.2.d/j
Obj V.E.2.c
Obj.V.E.2.d/i
Obj V.B.2.h
Obj.V.C.3.e
Obj.V.D.2.j
Obj.V.E.2.i

(1) The MMG is normally driven By the AC motor, powered from 480V Shutdown Board A. Should this supply fail, the AC motor is automatically disconnected and the DC motor starts, powered from 250V Battery Board. The DC motor has an alternate power supply from another 250V Battery Board. Transfer to the alternate DC source is manual. Underfrequency on the generator output will trip the DC motor. Transfer of the MMG set back to the AC motor is manual.

(2) The 1001 and 1003 breakers from an MMG set will trip on overvoltage or underfrequency at the output of the MMG. Also Unit 2 MMG Breakers are interlocked to prevent alternate power to unit 1 and 3 at the same time.

(3) When an under frequency or overvoltage condition exists at the Generator Output the following occurs

Obj. V.B.2.h
Obj. V.C.3.e
Obj. V.D.2.j
Obj. V.E.2.i

(a) BB panel 10 breakers from the MMG Set trip.

U2	1001 (U2)	1003 (U1&3)
U3	1001 (U3)	1003 (U2)

(b) Excitation is lost and the MMG Set continues to run. (The Hold to build up voltage switch must be depressed to restore voltage.)

21. RO 263000K1.02 001/MEM/T2G1/250VDC/3/263000K1.02//RO/SRO/

Which ONE of the following statements describes the operation of 250 VDC Battery Charger 2B?

A. The normal power supply to Battery Charger 2B is 480V Common Board 1.

B. Battery Charger 2B can supply, directly from unit 2 Battery Board room, any of the six Unit & Plant 250VDC battery boards.

C. Battery Charger 2B is capable of supplying two Battery Boards simultaneously.

D.✔ Load shedding of the battery charger can be bypassed by placing the Emergency ON select switch in the Emergency ON Position.

K/A Statement:
263000 DC Electrical Distribution
K1.02 - Knowledge of the physical connections and/or cause- effect relationships between D.C. ELECTRICAL DISTRIBUTION and the following: Battery charger and battery

K/A Justification: This question satisfies the K/A statement by requiring the candidate to use specific knowledge of battery charger operation.

References: OPL171.037

Level of Knowledge Justification: This question is rated as MEM due to the requirement to recall or recognize discrete bits of information.

0610 NRC Exam
REFERENCE PROVIDED: None

Plausibility Analysis:

In order to answer this question correctly the candidate must determine the following:

1. Normal and Alternate power to Battery Charger 2B.
2. Loads capable of being supplied by Battery Charger 2B.
3. Load Shedding logic and bypass capability.

A is incorrect. This is plausible because 480V Common Board 1 is the Alternate supply to Battery Charger 2B.

B is incorrect. This is plausible because Battery Charger 2B is capable of supplying any of the six 250V Battery Boards, but NOT directly from Unit 2 Battery Board Room.

C is incorrect. This is plausible because Battery Charger 2B is sufficiently large enough to support the loads, but mechanical interlocks prevent closing more than one output feeder breaker.

D is correct.

(2) The Plant/Station Batteries (4, 5, and 6) are Class Non-1E and are utilized primarily for U-2, U-1, and U-3 respectively --for normal loads — Obj V.B.1, Obj. V.C.1, Obj. V.D.1

(3) Battery (4) Room is located on Unit 3 in the Turbine Building on Elev. 586

(4) Battery (5 & 6) Rooms are located on the Turbine Floor, Elev. 617

(5) The boards and chargers for the Unit Batteries are located in Battery Board Rooms adjacent to the batteries they serve, with the spare charger being in the Unit 2 Battery Board room. (Battery Boards 5 & 6 and their associated chargers are located adjacent to the batteries, but are in the open space of the turbine floor.)

c. 250V Plant DC components

(1) Battery charger

(a) The battery chargers are of the solid state rectifier type. They normally supply loads on the 250V Plant DC Distribution System. Upon loss of power to the charger, the battery supplies the loads.

(b) The main bank chargers only provide float and equalize charge when tied to their loads. The chargers **are not** placed on fast charge (high voltage equalize) with any loads attached.

(c) They can recharge a fully discharged battery in 12 hours while supplying normal loads.

(d) Battery charger power supplies are manual transfer only. — Follow Procedure

250V Battery Charger	Normal Source	Alternate Source (Charger Service bus)
1	480V SD Bd 1A Comp 6D	480V Common Bd 1 Comp 3A
2A	480V SD Bd 2A Comp 6D	480V Common Bd 1 Comp 3A
2B	480V SD Bd 2B Comp 6D	480V Common Bd 1 Comp 3A
3	480V SD Bd 3A Comp 6D	480V Common Bd 1 Comp 3A

Obj. V.B.2
Obj. V.C.2
Obj .V.D.2

4	480V SD Bd 3B Comp 6D	480V Common Bd 1 Comp 3A
5	480V Com Bd 1 Comp 5C	(no alternate)
6	480V Com Bd 3 Comp 3D	(no alternate)
2B spare charger DC output can be directed to any of four feeders. Three DC outputs can be connected to battery board 1, 2, or 3. The fourth output is connected to a new output transfer switch (located in battery board room 4) which charges batteries 4, 5, or 6 plant batteries. A mechanical interlock permits closing only one output feeder at a time. (A slide bar is utilized in battery board room 2 and a Kirk key interlock is used in battery board room 4)		

TP-2 & TP-7

Attention to Detail

XI. Summary

We have discussed in detail the DC Power Systems at BFN. The electrical design and operation which makes these systems so reliable has been explained. The various systems have been described with reference to function, components, locations, and electrical loads. Power sources have been identified, and instrumentation has been noted. Significant control and alarm aspects have also been pointed out.

250V Battery Charger	Normal Source	Alternate Source (Charger Service bus)
1	480V SD Bd 1A, Comp 6D	480V Common Bd 1, Comp 3A
2A	480V SD Bd 2A Comp 6D	480V Common Bd 1, Comp 3A
2B	480V SD Bd 2B, Comp 6D	480V Common Bd 1, Comp 3A
3	480V SD Bd 3A, Comp 6D	480V Common Bd 1, Comp 3A
4	480V SD Bd 3B, Comp 6D	480V Common Bd 1, Comp 3A
5	480V Com Bd 1 Comp 5C	(no alternate)
6	480V Com Bd 3 Comp 3D	(no alternate)

The 2B spare charger DC output can be directed to any of four feeders. Three DC outputs can be connected to battery board 1, 2, or 3. The fourth DC output is connected to output transfer switch (BBR 4) to batteries 4, 5, or 6. Mechanical interlock permits closing only one output feeder at a time. (A slide bar is utilized in battery board room 2 and a Kirk key interlock is used in battery board room 4.)

250V DC battery chargers 1, 2A and 2B will load shed upon receipt of a Unit 1 or Unit 2 accident signal and any Unit 1/2 shutdown board being supplied by its respective diesel generator or cross tied to a Unit 3 shutdown board and a unit three Diesel Generator. 250 VDC Battery Charger 3 will load shed on a unit 3 load shed signal. The load shedding feature can be bypassed by placing the "Emergency" switch on the charger to the "EMERG" position.

Station Battery charger 4 does not have load shed logic; however, battery charger 4 will deenergize when 3B 480 S/D Board deenergizes and will return when the 480V S/D Board voltage returns.

They also supply alternate control power for Units 1 and 2 4kV Shutdown Boards; however, on Unit 3, the A, C, and D 4kV Shutdown Boards receive both normal and alternate control power from the 250V DC Unit Systems. (3EB receives alternate control power only.) The 250V DC RMOV Boards are supplied from the Unit Battery Board as follows:
BB-1 supplies 250V RMOV Boards 1A, 2C, 3B.
BB-2 supplies 250V RMOV Bds 2A, 1C, 3C.

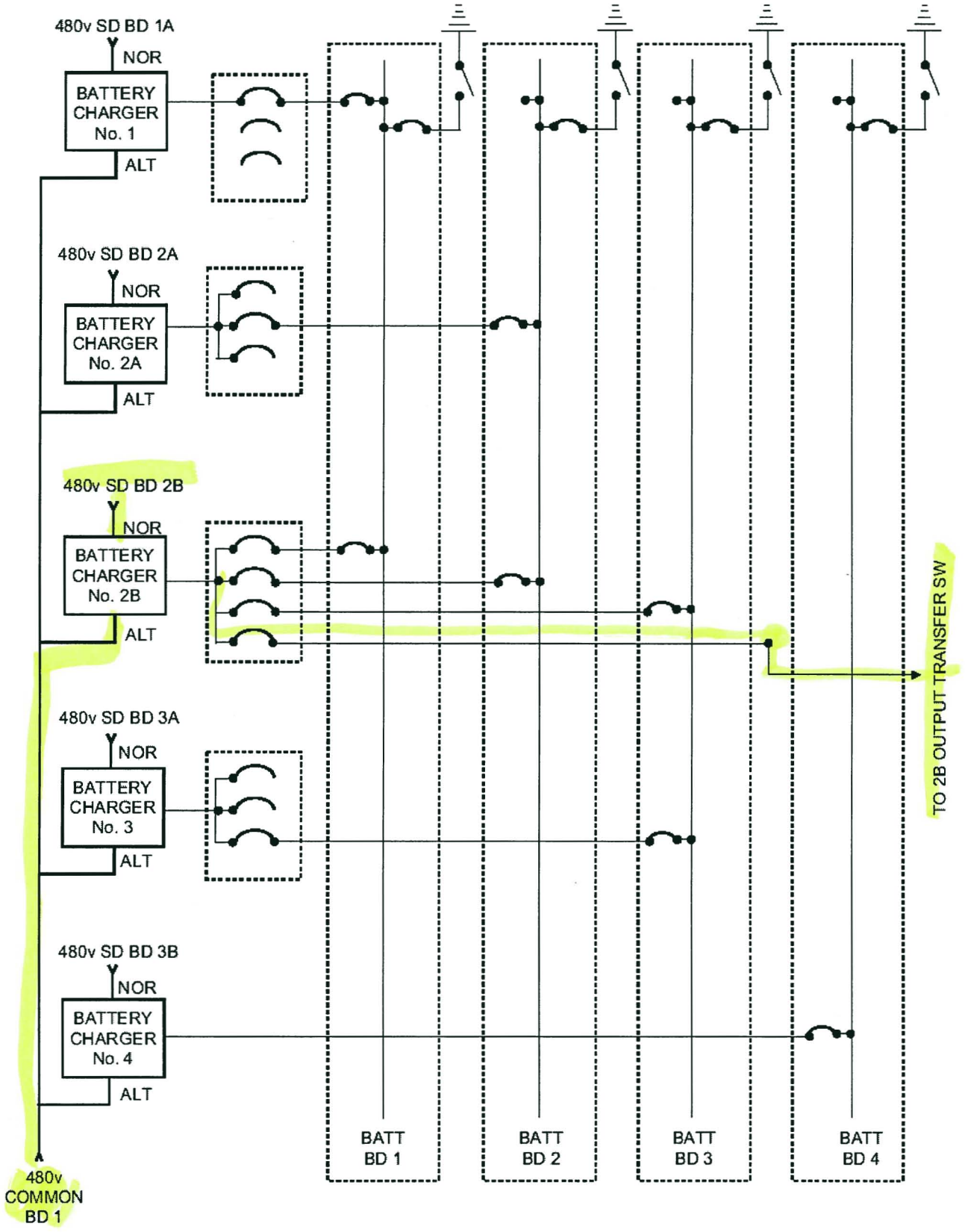

TP-2 250V DC Power Distribution

22. RO 264000K5.06 001/C/A/T2G1/82 - DG/9/264000K5.06//RO/SRO/

Given the following plant conditions:

- Unit 2 is operating at Full Power.
- No Equipment is Out of Service.
- A large leak occurs in the drywell and the following conditions exist:
  - Drywell Pressure peaked at 28 psig and is currently at 20 psig.
  - Reactor Pressure is at 110 psig.
  - Reactor Water Level is at -120 inches
  - Offsite power is available.

Which ONE of the following describes the proper loading sequence and associated equipment?

A.✔ 2B RHR and 2B Core Spray pumps start at 7 seconds after the accident signal is received.

B. RHRSW pumps lined up for EECW start at 14 seconds after the accident signal is received.

C. Core Spray pumps (2A, 2B, 2C, 2D) start immediately when voltage is available on the respective shutdown board.

D. 2C RHR and 2C Core Spray pumps start at 7 seconds after the accident signal is received.

K/A Statement:
264000 EDGs
K5.06 - Knowledge of the operational implications of the following concepts as they apply to EMERGENCY GENERATORS (DIESEL/JET) : Load sequencing

K/A Justification: This question satisfies the K/A statement by requiring the candidate to use specific plant conditions and times to correctly determine the effect of load sequencing on plant equipment supplied by the Emergency Generators.

References:

Level of Knowledge Justification: This question is rated as C/A due to the requirement to assemble, sort, and integrate the parts of the question to predict an outcome. This requires mentally using this knowledge and its meaning to predict the correct outcome.

0610 NRC Exam

REFERENCE PROVIDED: None

Plausibility Analysis:

In order to answer this question correctly the candidate must determine the following:

1. Load Sequencing is NVA (Normal Voltage Available) and **NOT** DGVA (D/G Voltage Available).
2. Based on Item 1 above, theproper load sequencing with a Common Accident Signal (CAS) on Unit-2 alone and **NOT** in addition to a CAS on Unit 1.

A is correct.

B is incorrect. This is plusible because RHRSW pumps all start at 14 seconds if load sequencing is DGVA.

C is incorrect. This is plausible based on Load Sequencing logic prior to a modification for Unit 1 restart activities.

D is incorrect. This is plausible because 2-OI-74 P&L 3.2.B defines the start time as 7 second ***"intervals"***.

INSTRUCTOR NOTES

(2) Opens diesel output breakers if shut. Obj.V.B.9

b. If normal voltage is available, load will sequence on as follows: (**NVA**) Obj.V.C.6 Obj.V.D.15 Obj.V.E. 15

Time After Accident	S/D Board A	S/D Board C	S/D Board B	S/D Board D
0	RHR/CS A			
7		RHR/CS B		
14			RHR/CS C	
21				RHR/CS D
28	RHRSW*	RHRSW*	RHRSW*	RHRSW*

*RHRSW pumps assigned for EECW automatic start

c. **If normal voltage is <u>NOT</u> available: (DGVA)** Obj.V.B.9 Obj.V.C.6

(1) After 5-second time delay, all 4kV Shutdown Board loads except 4160/480V transformer breakers are automatically tripped.

(2) Diesel generator output breaker closes when diesel is at speed.

(3) Loads sequence as indicated below

Time After Accident	S/D Board A	S/D Board B	S/D Board C	S/D Board D
0	RHR A	RHR C	RHR B	RHR D
7	CS A	CS C	CS B	CS D
14	RHRSW *	RHRSW *	RHRSW *	RHRSW *

*RHRSW pumps assigned for EECW automatic start

d. Certain 480V loads are shed whenever an accident signal is received in conjunction with the diesel generator tied to the board. (see OPL171.072)

3.2 LPCI (continued)

B. Upon an automatic LPCI initiation with normal power available, RHR Pump 2A starts immediately and 2B, 2C, 2D sequentially start at 7 second intervals. Otherwise, all RHR pumps start immediately once diesel power is available (and normal power unavailable).

C. Manually stopping an RHR pump after LPCI initiation disables automatic restart of that pump until the initiation signal is reset. The affected RHR pump can still be started manually.

3.3 Shutdown Cooling

A. Prior to initiating Shutdown Cooling, RHR should be flushed to Radwaste until conductivity is less than 2.0 micromho/cm with less than 0.1 ppm chlorides (unless directed otherwise by 2-AOI-74-1, Loss of Shutdown Cooling). If CS&S has been aligned as the keep fill source for two days or more a chemistry sample should be requested and results analyzed to determine if flushing is required.

B. When in Shutdown Cooling, reactor temperature should be maintained greater than 72°F and only be controlled by throttling RHRSW flow. This is to assure adequate mixing of reactor water.

1. [NER/C] Reactor vessel water temperatures below 68°F exceed the temperature reactivity assumed in the criticality analysis. [INPO SER 90-017]

2. [NER/C] Maintaining water temperature below 100°F minimizes the release of soluble activity. [GE SIL 541]

C. Shutdown Cooling operation at saturated conditions (212°F) with 2 RHR pumps operating at or near combined maximum flow (20,000 gpm) could cause Jet Pump Cavitation. Indications of Jet Pump Cavitation are as follows:

1. Rise in RHR System flow without a corresponding rise in Jet Pump flow.

2. Fluctuation of Jet Pump flow.

3. Louder "Rumbling" noise heard when vessel head is off.

Corrective action for any of these symptoms would be to reduce RHR flow until the symptom is corrected.

23. RO 300000K2.02 001/MEM/T2G1/CA//300000K2.02/2.8/2.8/RO/SRO/11/16/07 RMS

Which ONE of the following describes the power supplies to the Control and Service Air Compressor motors?

A. "A" and "B" are fed from the 480V Common Bd. #1
"C" and "D" from 480V S/D Bd. 1B & 2B, respectively
"G" from 4KV S/D Bd. B and 480 SD Bd. 2A
"E" from the 480V Common Bd. #1

B. "A" and "D" from 480V Common Bd. 1
"B" and "C" from 480V S/D Bd. 1B & 2B, respectively
"G" from 4KV S/D Bd. B and 480V RMOV Bd. 2A
"F" from 480V Common Bd. #3

C. "A" from 480V S/D Bd. 1B
"B" and "F" from 480V Common Bd. #3
"C" from 480V S/D Bd. 1A
"D" from 480V S/D Bd. 2A
"G" from 4KV Common Bd.#2

D.✔ "A" from 480V S/D Bd. 1B
"B" and "C" from 480V Common Bd. #1
"D" from 480V S/D Bd. 2A
"G" from 4KV S/D Bd. B and 480V RMOV Bd. 2A
"E" from 480V Common Bd. #3

K/A Statement:
300000 Instrument Air
K2.02 - Knowledge of electrical power supplies to the following: Emergency air compressor

K/A Justification: This question satisfies the K/A statement by requiring the candidate to use specific knowledge of the power supplies of ALL air compressors.

References:

Level of Knowledge Justification: This question is rated as MEM due to the requirement to recall or recognize discrete bits of information.

0610 NRC Exam

REFERENCE PROVIDED: None

Plausibility Analysis:

In order to answer this question correctly the candidate must determine the following:

1. Power supplies to six air compressors.

NOTE: Regarding plausibility, all the power supplies listed in the distractors are capable of supplying power to each air compressor.

A is incorrect. B, G & E are correct. A, C & D are incorrect.

B is incorrect. F & G are correct. A, B, C, & D are incorrect.

C is incorrect. A, D & F are correct. B, C & G are incorrect

D is correct.

X. Lesson Body

A. Control Air System

1. **The purpose of the Control Air System is to process and distribute oil-free control air, dried to a low dew point and free of foreign materials. This high-quality air is required throughout the plant and yard to ensure the proper functioning of pneumatically operated instruments, valves, and final operators. — ** SOER 88-1 Obj. V.E.1

2. Basic Description of Flow Path — TP-1

   a. The station control air system has 5 air compressors, each designed for continuous operation. — Obj. V.E.3 Obj. V.D.1

   b. Common header (fed by air compressors **A-D** and **G**)

      (1) The control air system is normally aligned with the **G** air compressor running and loaded. The existing **A-D** air compressors are aligned with one in second lead, one in third lead, and at least one compressor in standby. — The **G** air compressor will be discussed later in this section of the lesson plan.

      (2) 3 control air receivers

      (3) 4 dual dryers One for each unit's control air header (units 1, 2 & 3 through their 4-inch headers) and One standby dryer supplies the standby, 3- inch common control air header for all three units — normally aligned to all three units

      (4) Outlet from large service air receiver is connected to the control air receivers through a pressure control valve 0-FCV-33-1, which will automatically open to supply service air to the control air header if control air pressure falls to 85 psig.

   c. 4-inch control air header (1 per unit) is supplied from each unit dryer and backed up by a common, 3-inch standby header. — TP-1

3. Control Air System Component Description

   a. Four Reciprocating Air Compressors **A-D** (2-stage, double acting, Y-type) are located El 565, U-1 Turbine Building.

      (1) Supply air to the control air receivers at 610 scfm each at a normal operating pressure of 90 - 101 psig.

      (2) 480V, 60 Hz, 3-phase, drive motors

      (3) Power supplies

         A from **480V Shutdown Board 1B**

D from **480V Shutdown Board 2A**

B from **480V Common Board 1**

C from **480V Common Board 1**

(a) Control air compressors which are powered from the 480 VAC shutdown boards are tripped automatically due to: — Obj. V.B.1. Obj. V.C.1.

i. under voltage on the shutdown board.

ii. load shed logic during an accident signal concurrent with a loss of offsite power.

NOTE: The compressors must be restarted manually after power is restored to the board.

(b) Units powered from common boards also trip due to under voltage.

(4) Lubrication provided from attached oil system via gear-type oil pump

(a) Compressor trips on lube oil pressure < 10 psig or lube oil temperature >180 °F — Obj. V.B.2. Obj. V.C.2. Obj. V.E.12 Obj. V.D.10

(b) Compressor cylinder is a non lubricated type

(5) Cooling water is from the Raw Cooling Water system with backup from EECW

(a) Compressor oil cooler, compressor inter-cooler, after cooler and cylinder water jackets

(b) Compressor inter-cooler and after cooler moisture traps drain moisture to the Unit 1 station sump.

NOTE: Cooling water flows to the compressors are regulated such that the RCW outlet temperature is maintained between 70° F and 100° F. Outlet temperatures should be adjusted low in the band (high flow rates) during warm seasons (river temps. ≥ 70°F). Outlet temperatures should be adjusted high in the band during the cooler seasons (river temps ≤ 70°F) to reduce condensation in the cylinders. — Obj. V.B.2. Obj. V.C.2. Obj. V.E.12

(c) Compressor auto trips if discharge temperature of air > 310° F.

b. Unloaders — Obj. V.D.10

(b) Should both the primary and the backup controllers fail, all four compressors will come on line at full load until these pressure switches cause the compressors to unload at 112 psig.

Cutout switch setpoints are set at 112 psig to prevent spurious operation when **G** air compressor running

(c) When air pressure drops below the high pressure cutoff setpoint (110.8 psig), the compressors will again come on line at full load until the high pressure cutoff switches cause the compressors to unload.

d. Relief valves on the compressors discharge set at 120 psig protects the compressor and piping.

e. **G** Air Compressor - centrifugal type, two stage

(1) Located 565' EL Turbine Bldg., Unit 1 end. Control Air Compressor **G** is the primary control air compressor and provides most of the control air needed for normal plant operation.

(2) Rated at 1440 SCFM @ 105 psig.

(3) Power Supply

(a) **4 kV Shutdown Board B** supplies power to the compressor motor.

(b) **480 V RMOV Bd. 2A** Supplies the following:

- Pre lube pump
- Oil reservoir heater
- Cooling water pumps
- Panel(s) control power
- Auto Restart circuit

(c) Except for short power interruptions on the **480v RMOV Bd**, Loss of <u>either</u> of these two power supplies will result in a shutdown of the **G** air compressor.

(4) A complete description of the **G** Air compressor controls and indications can be found in 0-OI-32. (The **G** and the **F** air compressor indications and Microcontrollers are similar).

Cover OI illustrations

(a) **UNLOAD MODULATE AUTO DUAL** handswitch is used to select the mode of operation for the compressor

TP-8

3. Component Description	Obj. V.E.6
a. Compressors **E** and **F** (EL 565, U-3 Turbine Building) are designated for service air.	Obj. V.D.4
b. The **F** air compressor is rated for approximately 630 SCFM @ 105 psig, centrifugal type, 2 stages	
c. The power supply for both compressors is **480VAC Common Board 3**.	
d. **F/G** air compressor comparison	
(1) Controls are similar to that of the **G** air compressor. There is no 4KV breaker control on the **F** air compressor control panel.	TP-16 Obj.V.E.7 Obj. V.D.5
(2) Control system modulates discharge air pressure in the same manner as is done on the **G** air compressor.	Set to control at approx. 95 psig - Relief Valve is set to lift at ≈ 115 psig.
(3) Air system is similar to the **G** air compressor. A difference is that the 2 stages of compression are driven by one shaft for the **F** air compressor. On the **G** air compressor, there is a separate drives; one for each of 3 compression stages.	TP-17
(4) Oil system similar to that on the **G** air compressor with exception of location of components and capacity. **E** compressor has an electric oil pump that runs whenever control power is on.	TP-18
(5) Cooling system is similar to that on the **G** air compressor with exception of flow rate, location, and capacity of components.	TP-19
(6) Loss of power will result in **F** air compressor trip, loss of the pre lube pump, and the cooling water pumps.	
(7) Restart of the compressor can be accomplished once the compressor has come to a full stop and any trip conditions cleared and reset.	
e. Alarms/Trips	
(1) The Alert and Shutdown setpoints for the **F** air compressor are listed in 0-OI-33.	See for latest setpoints

24. RO 300000K3.01 001/C/A/T2G1/SGT/B10B/300000K3.01/3.2/3.4/RO/SRO/11/16/07 RMS

A LOCA has occurred on Unit 1 and the drywell is being vented to SBGT, when a loss of the Control Air system occurs.

Which ONE of the following describes the operation of vent valves 1-FCV-64-29, DRYWELL VENT INBD ISOL VALVE and 1-FCV-84-19, PATH B VENT FLOW CONT?

A. Both vent valves 1-FCV-64-29 & 1-FCV-84-19 will fail close and can not be operated.

B. Both vent valves 1-FCV-64-29 & 1-FCV-84-19 will auto swap to control from the CAD supply line with no operator action required.

C.✔ Both vent valves 1-FCV-64-29 & 1-FCV-84-19 will auto swap to control from the CAD supply line, however CAD supply must be manually aligned from the control room.

D. The CAD system must be manually initiated and then vent valves 1-FCV-64-29 & 1-FCV-84-19 may be realigned to the CAD supply.

K/A Statement:
300000 Instrument Air
K3.01 - Knowledge of the effect that a loss or malfunction of the (INSTRUMENT AIR SYSTEM) will have on the following: Containment air system

K/A Justification: This question satisfies the K/A statement by requiring the candidate to use specific plant conditions to determine the effect on the containment air system due to a loss of Control Air.

References: 1-EOI Appendicies 8G and 12, 1-AOI-32-2

Level of Knowledge Justification: This question is rated as C/A due to the requirement to assemble, sort, and integrate the parts of the question to predict an outcome. This requires mentally using this knowledge and its meaning to predict the correct outcome.

0610 NRC Exam

REFERENCE PROVIDED: None

Plausibility Analysis:

In order to answer this question correctly the candidate must determine the following:

1. Whether the vent valves automatically swap to be supplied by CAD or must be manually aligned.
2. Whether CAD supply to DW Control Air automatically swaps or must be manually aligned.

A is incorrect. This is plausible because the vent valves DO fail closed, however, they can be operated with manual alignment of the CAD Tanks.

B is incorrect. This is plausible because the vent valves will auto swap to control from the CAD supply line, however the CAD tanks must be manually aligned.

C is correct.

D is incorrect. This is plausible becase the CAD system must be manually initiated, however once this is accomplished, no further alignment is necessary.

f. **VERIFY** 1-FIC-84-20, PATH A VENT FLOW CONT, is indicating approximately 100 scfm. _____

g. **CONTINUE** in this procedure at step 12. _____

10. **VENT** the Drywell using 1-FIC-84-19, PATH B VENT FLOW CONT, as follows:

a. **VERIFY CLOSED** 1-FCV-64-141, DRYWELL DP COMP BYPASS VALVE (Panel 1-9-3). _____

b. **PLACE** keylock switch 1-HS-84-36, SUPPR CHBR/DW VENT ISOL BYP SELECT, to DRYWELL position (Panel 1-9-54). _____

c. **VERIFY OPEN** 1-FCV-64-29, DRYWELL VENT INBD ISOL VALVE (Panel 1-9-54). _____

d. **PLACE** 1-FIC-84-19, PATH B VENT FLOW CONT, in AUTO with setpoint at 100 scfm (Panel 1-9-55). _____

e. **PLACE** keylock switch 1-HS-84-19, 1-FCV-84-19 CONTROL, in OPEN (Panel 1-9-55). _____

f. **VERIFY** 1-FIC-84-19, PATH B VENT FLOW CONT, is indicating approximately 100 scfm. _____

g. **CONTINUE** in this procedure at step 12. _____

11. **VENT** the Drywell using 1-FIC-84-20, PATH A VENT FLOW CONT, as follows:

a. **VERIFY CLOSED** 1-FCV-64-141, DRYWELL DP COMP BYPASS VALVE (Panel 1-9-3). _____

b. **PLACE** keylock switch 1-HS-84-35, SUPPR CHBR / DW VENT ISOL BYP SELECT, to DRYWELL position (Panel 1-9-54). _____

c. **VERIFY OPEN** 1-FCV-64-31, DRYWELL INBD ISOL VALVE (Panel 1-9-54). _____

d. **VERIFY** 1-FIC-84-20, PATH A VENT FLOW CONT, in AUTO with setpoint at 100 scfm (Panel 1-9-55). _____

e. **PLACE** keylock switch 1-HS-84-20, 1-FCV-84-20 ISOLATION BYPASS, in BYPASS (Panel 1-9-55). _____

f. **VERIFY** 1-FIC-84-20, PATH A VENT FLOW CONT, is indicating approximately 100 scfm. _____

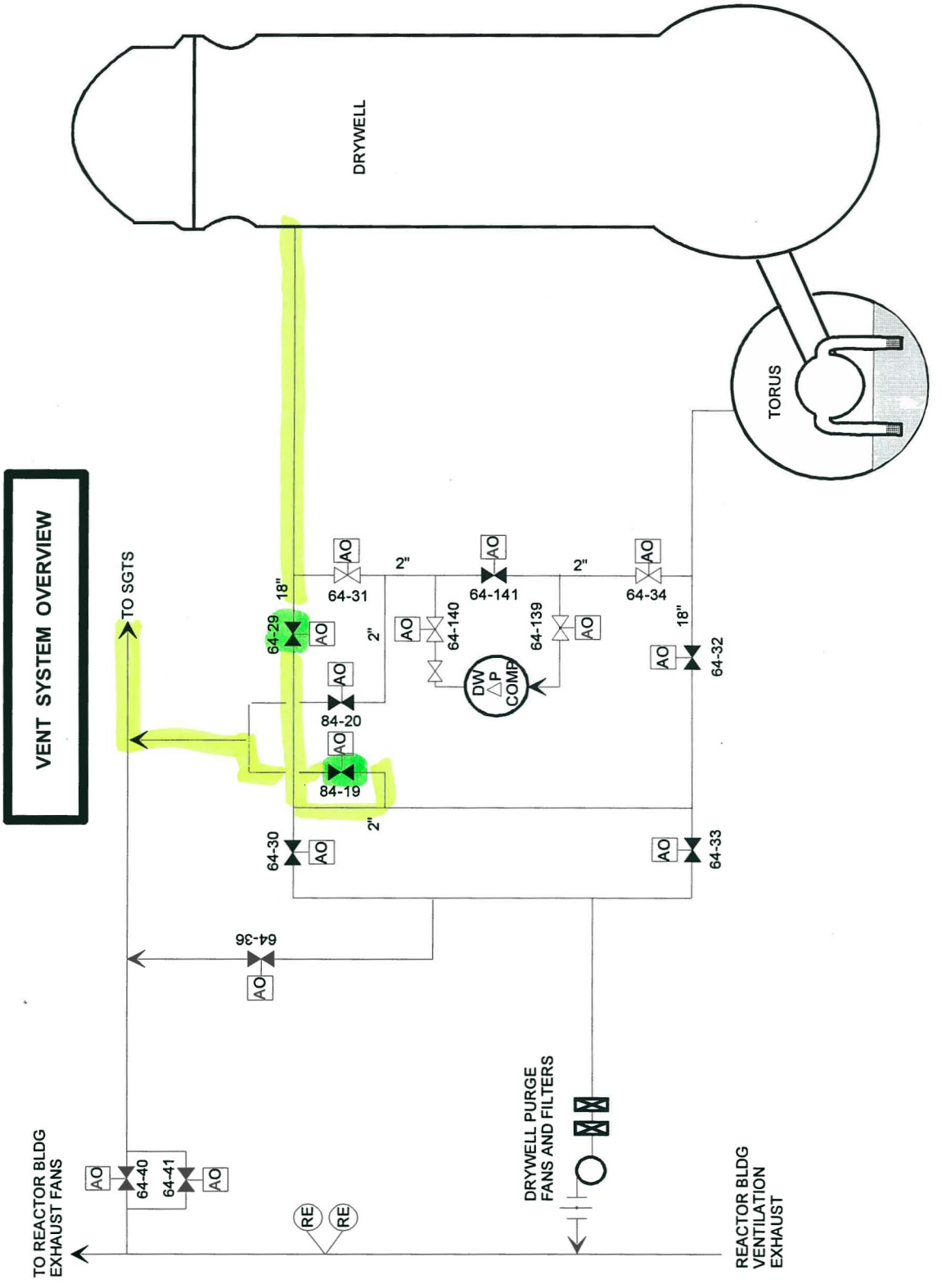
VENT SYSTEM OVERVIEW
DRYWELL
TORUS
TO SGTS
18"
64-29
AO
64-31
2"
84-20
84-19
64-30
64-36
64-140
64-141
64-139
DW ΔP COMP
64-34
64-32
64-33
TO REACTOR BLDG EXHAUST FANS
64-40
64-41
RE
DRYWELL PURGE FANS AND FILTERS
REACTOR BLDG VENTILATION EXHAUST

LOCATION:	Unit 1 Control Room
ATTACHMENTS:	None (✓)

1. **OPEN** the following valves:
   - 0-FCV-84-5, CAD A TANK N2 OUTLET VALVE (Unit 1, Panel 1-9-54) _____
   - 0-FCV-84-16, CAD B TANK N2 OUTLET VALVE (Unit 1, Panel 1-9-55). _____
2. **VERIFY** 0-PI-84-6, VAPOR A OUTLET PRESS, and 0-PI-84-17, VAPOR B OUTLET PRESS, indicate approximately 100 psig Panel 1-9-54 and Panel 1-9-55). _____
3. **PLACE** keylock switch 1-HS-84-48, CAD A CROSS TIE TO DW CONTROL AIR, in OPEN (Panel 1-9-54). _____
4. **CHECK OPEN** 1-FSV-84-48, CAD A CROSS TIE TO DW CONTROL AIR, (Panel 1-9-54). _____
5. **PLACE** keylock switch 1-HS-84-49, CAD B CROSS TIE TO DW CONTROL AIR, in OPEN (Panel 1-9-55). _____
6. **CHECK OPEN** 1-FSV-84-49, CAD B CROSS TIE TO DW CONTROL AIR (Panel 1-9-55). _____
7. **CHECK** MAIN STEAM RELIEF VLV AIR ACCUM PRESS LOW, 1-PA-32-31, alarm cleared (1-XA-55-3D, Window 18). _____
8. IF ..... MAIN STEAM RELIEF VLV AIR ACCUM PRESS LOW, 1-PA-32-31, annunciator is or remains in alarm (1-XA-55-3D, Window 18),

   THEN..... **DETERMINE** which Drywell Control Air header is depressurized as follows:

   a. **DISPATCH** personnel to Unit 1, RB, El 565 ft, to **MONITOR** the following indications for low pressure:
      - 1-PI-084-0051, DW CONT AIR N2 SUPPLY PRESS indicator, for CAD A (RB, El. 565, by Drywell Access Door), _____
      - 1-PI-084-0050, DW CONT AIR N2 SUPPLY PRESS indicator, for CAD B (RB, El. 565, left side of 480V RB Vent Board 1B). _____

2.0 SYMPTOMS (continued)

- REACTOR CHANNEL A(B) AUTO SCRAM annunciator, (1-XA-55-5B, Window 1(2)) in alarm.
- MAIN STEAM RELIEF VLV AIR ACCUM PRESS LOW annunciator, (1-XA-55-3D, Window 18) in alarm.

3.0 AUTOMATIC ACTIONS

A. U-1 TO U-2 CONT AIR CROSSTIE, 1-PCV-032-3901, will CLOSE to separate Units 1 & 2 when control Air Header Control Air Header pressure reaches 65 psig lowering at the valve.

B. UNIT 2 TO UNIT 3 CONTROL AIR CROSSTIE, 2-PCV-032-3901, will CLOSE to separate Units 2 and 3 when Control Air Header pressure reaches 65 psig lowering at the valve.

C. CAD SUPPLY PRESS REGULATOR, 1-PCV-084-0706, will select nitrogen from CAD Tank A at ≤ 75 psig Control Air pressure to supply the following:

1. SUPPR CHBR VAC RELIEF VALVE, 1-FSV-064-0020
2. SUPPR CHBR VAC RELIEF VALVE, 1-FSV-064-0021

D. INST GAS SELECTOR VALVE, 1-PCV-084-0033, will select nitrogen from CAD Tank A to supply the following:

1. DRYWELL OR SUPPRESS CHMBR EXHAUST TO SGTS, 1-FSV-084-0019
2. DRYWELL VENT INBD ISOL VALVE, 1-FSV-064-0029
3. SUPPR CHMBR VENT INBD ISOL VALVE, 1-FSV-064-0032

E. INST GAS SELECTOR VALVE, 1-PCV-084-0034, will select nitrogen from CAD Tank B to supply the following:

1. DRYWELL OR SUPPRESS CHMBR EXHAUST TO SGTS, 1-FSV-084-0020
2. DRYWELL INBD ISOLATION VLV, 1-FSV-064-0031
3. SUPPR CHBR INBD ISOLATION VLV, 1-FSV-064-0034.

4.2 Subsequent Actions (continued)

NOTE

CNDS BSTR PMPS DISCH BYPASS TO COND 1C, 1-FCV-002-0029A and CNDS BSTR PMPS DISCH BYPASS TO COND 1B, 1-FCV-002-0029B both fail CLOSED on a loss of control air.

[3] **IF** there is **NOT** a flow path for Condensate system, **THEN**

STOP the Condensate Pumps and Condensate Booster Pumps. **REFER TO** 1-OI-2. ☐

[4] **IF** any Outboard MSIV closes, **THEN**

PLACE the associated handswitch on Panel 1-9-3 in the CLOSE position. ☐

NOTE

RSW STRG TNK ISOLATION, 0-FCV-25-32, fails CLOSED on loss of control air.

[5] **START** a High Pressure Fire Pump. **REFER TO** 0-OI-26. ☐

[6] **OPEN** CAD SYSTEM A N2 SHUTOFF VALVE, 0-FCV-84-5, at Panel 1-9-54. ☐

[7] **OPEN** CAD SYSTEM B N2 SHUTOFF VALVE, 0-FCV-84-16, at Panel 1-9-55. ☐

[8] **CHECK** RCW pump motor amps and **PERFORM** Steps 4.2[8.1] through 4.2[8.5]to reduce RCW flow:

25. RO 400000A2.02 001/C/A/T2G1/RBCCW//400000A2.02/3.8/4.1/RO/SRO/11/16/07 RMS

With Unit 2 operating at power, the following changes are observed:

- RBCCW Temperature lower than normal.
- Annunciator 2-XA-55-4C-6 RBCCW Surge Tank High Level is in alarm.

Which ONE of the following describes a cause for these indications and the corrective action required?

A. Reactor Recirculation Pump seal cooler leak into RBCCW. Trip and isolate the Recirculation Pump.

B.✔ RCW leak in the RBCCW heat exchanger(s). Remove RBCCW from service following unit shutdown.

C. RWCU leak into RBCCW via non-regenerative heat exchanger. Isolate RWCU.

D. Drywell equipment drain sump heat exchanger leak into RBCCW. Isolate DW Equipment Drain Sump heat exchanger.

K/A Statement:
400000 Component Cooling Water
A2.02 - Ability to (a) predict the impacts of the following on the CCWS and (b) based on those predictions, use procedures to correct, control, or mitigate the consequences of those abnormal operation: High/low surge tank level

K/A Justification: This question satisfies the K/A statement by requiring the candidate to use specific plant conditions to determine the effect of a leak into the RBCCW system and determine which procedure addresses this condition.

References:

Level of Knowledge Justification: This question is rated as C/A due to the requirement to assemble, sort, and integrate the parts of the question to predict an outcome. This requires mentally using this knowledge and its meaning to predict the correct outcome.

0610 NRC Exam

REFERENCE PROVIDED: None

Plausibility Analysis:

In order to answer this question correctly the candidate must determine the following:

1. Which leak path would provide the indications given in the question stem.
2. What actions would be required to mitigate the problem.

NOTE: All distractors are plausible leak paths into RBCCW but would indicate higher temperatures.

A is incorrect. A Reactor Recirculation Pump seal cooler leak would cause RBCCW temperature to rise.

B is Correct.

C is incorrect. A RWCU leak would cause RBCCW temperature to rise.

D is incorrect. A DW Equipment Drain Sump HX leak would cause RBCCW temperature to rise.

RBCCW SURGE TANK LEVEL HIGH 1-LA-70-2A	6

(Page 1 of 2)

Sensor/Trip Point:

1-LS-070-0002A 4 Inches Above Center Line of Tank

Sensor Location: RBCCW surge tank on the fourth floor in the M-G set room.

Probable Cause:
A. Makeup valve 1-FCV-70-1 open.
B. Bypass valve 1-2-1369 leaking.
C. Leak into the system.

Automatic Action: None

Operator Action:
A. **VERIFY** make-up valve 1-FCV-70-1 closed, using RBCCW SYS SURGE TANK FILL VALVE, 1-HS-70-1, on Panel 1-9-4. ☐
B. **CHECK** RBCCW PUMP SUCTION HDR TEMP, 1-TIS-70-3, indicates water temperature is 100°F or less, on Panel 1-9-4. ☐
C. **DISPATCH** personnel to verify high level, ensure bypass valve, 1-2-1369, is closed and observe sight glass level. ☐
D. **OPEN** surge tank drain valve, 1-70-609, then **CLOSE** valve when desired level is obtained. ☐
E. **REQUEST** Chemistry to pull and analyze a sample for total gamma activity and attempt to qualify source of leak. ☐
F. **CHECK** activity reading on RM-90-131D. ☐

Continued on Next Page

RBCCW SURGE TANK LEVEL HIGH 1-LA-70-2A, Window 6
(Page 2 of 2)

Operator Action: (Continued)

NOTE
[NER/C] Reactor Recirculation Pump seal cooler leakage may be indicated by a rise in 1-RM-90-131 (Panel 1-9-10) activity (1-RR-90-131/132 Panel 1-9-2) or 1-TE-68-54 or 67 temperature (Panel 1-9-21) or lowering of any Recirc pump seal pressure.

G. **IF** it is suspected that the Reactor Recirculation Pump seal cooler is leaking, **THEN**
PERFORM the following:
- **DETERMINE** which Reactor Recirculation loop is leaking and at the discretion of the Unit Supervisor, **ISOLATE**. **REFER TO** 1-OI-68 Section 7.1 or 8.2 as applicable. **COOLDOWN** is required to prevent hanger or shock suppressors from exceeding their maximum travel range. ☐
- **WHEN** primary system pressure is below 125 psig and at the discretion of the Unit Supervisor, **THEN**
ISOLATE the RBCCW System to preclude damage to the RBCCW PIPING.[IEN 89-054, GE SIL-459] ☐

H. **START** selective valving to determine in-leakage source, if present. ☐

References: 1-45E620-4 1-47E610-70-1
FSAR Section 10.6.4 and 13.6.2

26. RO 400000G2.4.31 001/C/A/T2G1/RBCCW//4000002.4.30//RO/SRO/NO

Unit 3 is at 100% rated power with the following indications:

- RECIRC PUMP MTR B TEMP HIGH (3-ARP-9-4B W13) in alarm.
- RBCCW EFFLUENT RADIATION HIGH (3-ARP-9-3A W17) in alarm.
- RBCCW SURGE TANK LEVEL HIGH (3-ARP-9-4C W6) in alarm.
- RX BLDG AREA RADIATION HIGH (3-ARP-9-3A W22) in alarm.
- RECIRC PMP MTR 3B WINDING AND BRG TEMP recorder 3-TR-68-84 is reading 170 ^{o}F and rising.
- RBCCW PUMP SUCTION HDR TEMP 3-TIS-70-3 is reading 140 ^{o}F and rising.
- RWCU NON-REGENERATIVE HX DISCH TEMP HIGH in alarm.
- AREA RADIATION MONITOR RE-90-13 and RE-90-14 are in alarm reading 55 mr/hr and rising.

Which ONE of the following describes the action(s) that should be taken?

REFERENCE PROVIDED

A.✔ Enter 3-EOI-3, Secondary Containment Control. Trip and isolate 3B Recirc Pump. Commence a normal shutdown and cooldown in accordance with 3-GOI-100-12A, Unit Shutdown.

B. Enter 3-EOI-3, Secondary Containment Control. Trip and isolate 3B Recirc Pump. Enter 3-EOI-1, RPV Control at Step RC-1.

C. Trip RWCU pumps and isolate RWCU system. Close RBCCW Sectionalizing Valve 3-FCV-70-48 to isolate non-essential loads and maximize cooling to 3B Recirc. Pump. EOI entry is not required.

D. Enter 3-EOI-3, Secondary Containment Control. Trip RWCU pumps and isolate RWCU system. Commence a normal shutdown in accordance with 3-GOI-100-12A, Unit Shutdown.

K/A Statement:
400000 Component Cooling Water
2.4.31 - Emergency Procedures / Plan Knowledge of annunciators alarms and indications, and use of the response instructions.

K/A Justification: This question satisfies the K/A statement by requiring the candidate to use specific plant conditions to determine the corrective actions required due to an emergency involving RBCCW based on annunciators and indications.

References: 3-EOI-3 flowchart, 3-ARP 9-3 and 3-ARP-9-4

Level of Knowledge Justification: This question is rated as C/A due to the requirement to assemble, sort, and integrate the parts of the question to predict an outcome. This requires mentally using this knowledge and its meaning to predict the correct outcome.

0610 NRC Exam

REFERENCE PROVIDED: 3-EOI-3 flowchart

Plausibility Analysis:

In order to answer this question correctly the candidate must determine the following:

1. EOI Entry is required solely based on ARM alarms.
2. Location of the leak is from the 3B Recic Pump.
3. RWCU temperature indications are due to insufficient cooling by RBCCW, not a RWCU leak.
4. Appropriate actions per 3-EOI-3 are to isolate the leak and monitor radiation levels.
5. Justification for Unit Shudwon and Cooldown are due to the Recirc Loop being isolated at rated temperature and pressure (pipe hanger and support issue), and NOT Directed by 3-EOI-3.

A is correct.

B is incorrect. Entering 3-EOI-1 to initiate a scram is NOT required until radiation levels approach 1000 mr/hr in any area. This is plausible becuase the location of the leak and required isolation are correct.

C is incorrect. This is plausible if the candidate incorrectly determines that RWCU is causing the temperature issues with 3B Recirc Pump and not vice versa. If RWCU was the leak location, the RBCCW temperature would not be high enough to provide the given indications. The leak would have to have occurred in the NRHX which is below the indicated RBCCW temperature.

D is incorrect. This is plausible if the candidate incorrectly determines that RWCU is causing the temperature issues with 3B Recirc Pump and not vice versa. In addition to the justification above, commencing a shutdown in accordance with 3-EOI-3 is not appropriate until ARMs indicate greater than 1000 mr/hr.

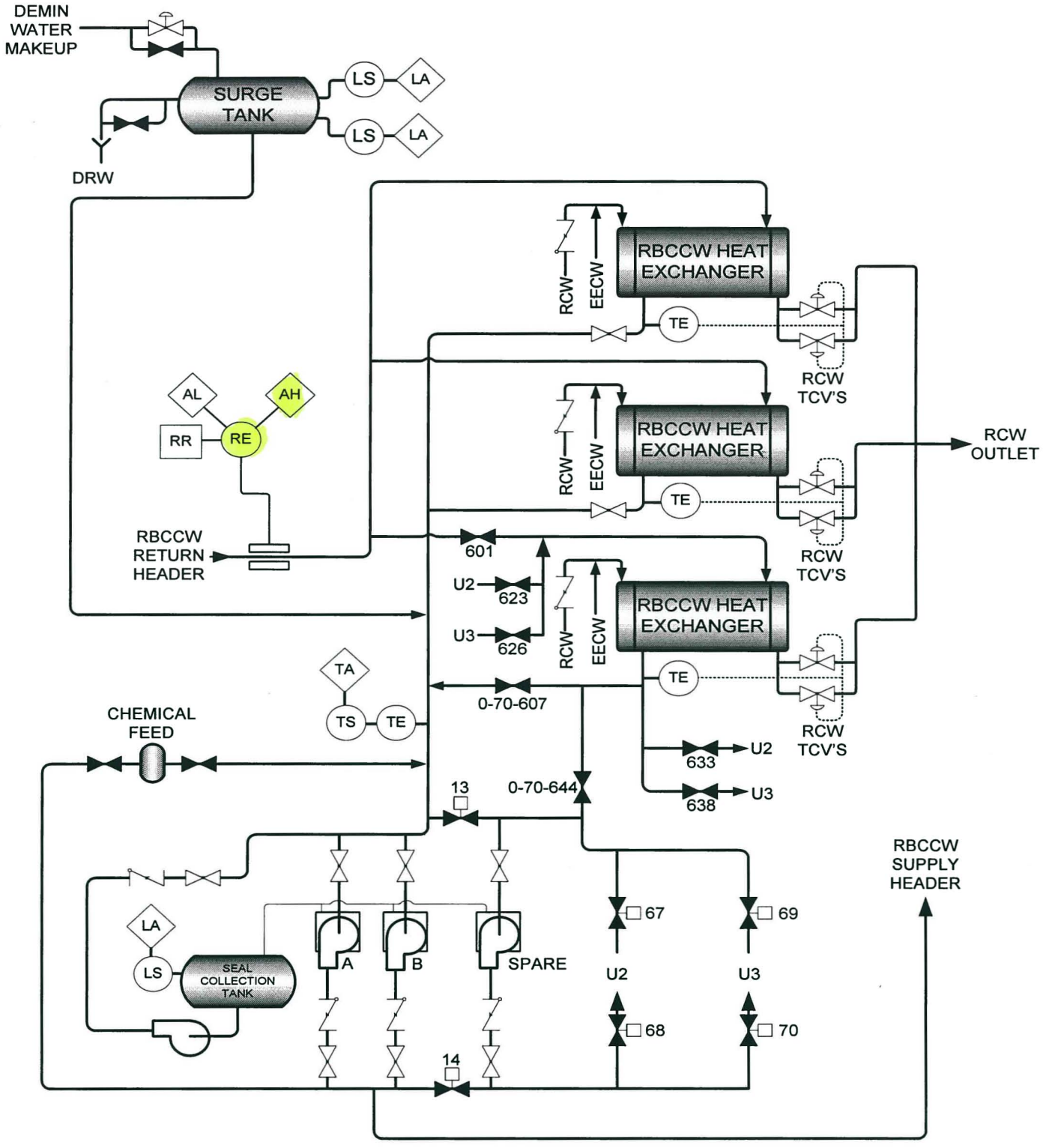

TP-1: RBCCW SYSTEM FLOW DIAGRAM

RECIRC PUMP MTR B TEMP HIGH 3-TA-68-84	13

(Page 1 of 1)

Sensor/Trip Point: Alarm is from 3-TR-68-84, Panel 3-9-2

3-TE-68-73A RECIRC PMP MTR 3B-THR BRG UPPER FACE (190°F)
3-TE-68-73C RECIRC PMP MTR 3B-THR BRG LOWER FACE (190°F)
3-TE-68-73E RECIRC PMP MTR 3B-UPPER GUIDE BRG (190°F)
3-TE-68-73N RECIRC PMP MTR 3B-LOWER GUIDE BRG (190°F)
3-TE-68-73G RECIRC PMP MTR 3B-MOTOR WINDING A (216°F)
3-TE-68-73J RECIRC PMP MTR 3B-MOTOR WINDING B (216°F)
3-TE-68-73L RECIRC PMP MTR 3B-MOTOR WINDING C (216°F)
3-TE-68-73T RECIRC PMP MTR 3B-SEAL NO. 2 CAVITY(180°F)
3-TE-68-73U RECIRC PMP MTR 3B-SEAL NO. 1 CAVITY(180°F)
3-TE-68-67 RECIRC PMP MTR 3B-CLG WTR FROM SEAL CLG (140°F)
3-TE-68-70 RECIRC PMP MTR 3B-CLG WTR FROM BRG (140°F)

Sensor Location: Temperature elements are located on recirculation pump motor, Elevation 563.12, Unit 3 drywell.

Probable Cause:
A. Possible bearing failure.
B. Possible motor overload.
C. Insufficient cooling water.
D. Possible seal failure.
E. High drywell temperature.

Automatic Action: None

Operator Action:

A. **CHECK** following on Panel 3-9-4: ☐
- RBCCW PUMP SUCTION HDR TEMP temperature indicating switch, 3-TIS-70-3 normal (summer 70-95°F, winter 60-80°F). ☐
- RBCCW PRI CTMT OUTLET handswitch, 3-HS-70-47A (3-FCV-70-47) OPEN. ☐

B. **CHECK** the temperature of the cooling water leaving the seal and bearing coolers < 140°F on RECIRC PMP MTR 3B WINDING AND BRG TEMP temperature recorder, 3-TR-68-84 on Panel 3-9-21. ☐

C. **LOWER** recirc pump speed until Bearing and/or Winding temperatures are below the alarm setpoint. ☐

D. **CONTACT** Site Engineering to PERFORM a complete assessment and monitoring of all seal conditions particularly seal leakage, temperature, and pressure of all stages for Recirc Pump seal temperatures in excess of 180°F. ☐

References:

3-45E620-5	3-47E610-68-1	Tech Spec 3.4.1
GE 731E320RE	3-SIMI-68B	FSAR Section 13.6.2

RBCCW EFFLUENT RADIATION HIGH 3-RA-90-131A	17

(Page 1 of 2)

Sensor/Trip Point:

	HI	HI-HI
RE-90-131D	(NOTE 2)	(NOTE 2)

Hi alarm from recorder
Hi-Hi alarm from drawer
(2) Chemlab should be contacted for current setpoints per 0-TI-45.

Sensor Location: RE-90-131A RBCCW HX Rx Bldg, El 593, R-20 S-LINE

Probable Cause: HX tube leak into RBCCW system.

Automatic Action: None

Operator Action:

A. **DETERMINE** cause of alarm by observing following:
   1. RBCCW and RCW EFFLUENT RADIATION recorder, 3-RR-90-131/132 Red pen on Panel 3-9-2. ☐
   2. RBCCW EFFLUENT OFFLINE RAD MON, 3-RM-90-131D on Panel 3-9-10. ☐

B. **NOTIFY** Chemistry to sample RBCCW for total gamma activity to verify condition. ☐

C. **START** an immediate investigation to determine if source of leak is RWCU Non-regenerative, Fuel Pool Cooling, Reactor Water Sample or RWCU Recirc Pump 3A or 3B Seal Water heat exchanger(s). ☐

D. [NER/C] **CHECK** Following for indication of Reactor Recirculation Pump Seal Heat Exchanger leak:
   1. LOWERING in reactor Recirculation pump 3A(3B) No. 1 or 2 SEAL, 3-PI-68-64A or 3-PI-68-63A (3-PI-68-76A or 3-PI-68-75A) on Panel 3-9-4. ☐
   2. Temperature rise on CLG WTR FROM SEAL CLG TE-68-54, on RECIRC PMP MTR 3A WINDING AND BRG TEMP temperature recorder, 3-TR-68-58, on Panel 3-9-21. ☐
   3. Temperature rise on CLG WTR FROM SEAL CLG TE-68-67, on RECIRC PMP MTR 3B WINDING AND BRG TEMP temperature recorder, 3-TR-68-84, on Panel 3-9-21. ☐

Continued on Next Page

RBCCW EFFLUENT RADIATION HIGH 3-RA-90-131A, Window 17
(Page 2 of 2)

Operator Action: (Continued)

E. **IF** it is determined the source of leakage is from Reactor Recirc Pump A(B), **THEN**
   1. **ISOLATE** Reactor Recirculation Loop A(B) per 3-OI-68, as applicable. ☐

NOTE
Cooldown is required to prevent hangers or shock suppressors from exceeding their maximum travel range.

   2. **WHEN** primary system pressure is less than 125 psig, **THEN** **ISOLATE** RBCCW System to preclude damage to RBCCW piping. [IEN 89-054, GE SIL-459] ☐

References: 3-45E620-3 3-47E610-90-3 GE 3-729E814-3

RX BLDG AREA RADIATION HIGH 3-RA-90-1D	22

(Page 1 of 2)

Sensor/Trip Point:

RI-90-4A	RI-90-23A	For setpoints **REFER TO** 3-SIMI-90B.
RI-90-8A	RI-90-24A	
RI-90-9A	RI-90-25A	
RI-90-13A	RI-90-26A	
RI-90-14A	RI-90-27A	
RI-90-20A	RI-90-28A	
RI-90-21A	RI-90-29A	
RI-90-22A		

Sensor Location:

RE-90-4	MG set area	Rx Bldg El. 639	R-17 Q-LINE
RE-90-8	Main Control Room	Rx Bldg El. 617	R-16 R-LINE
RE-90-9	Clean-up System	Rx Bldg El. 621	R-16 T-LINE
RE-90-13	North Clean-up Sys.	Rx Bldg El. 593	R-16 P-LINE
RE-90-14	South Clean-up Sys.	Rx Bldg El. 593	R-16 S-LINE
RE-90-20	CRD-HCU West	Rx Bldg El. 565	R-16 R-LINE
RE-90-21	CRD-HCU East	Rx Bldg El. 565	R-20 R-LINE
RE-90-22	Tip Room	Rx Bldg El. 565	R-19 P-LINE
RE-90-23	Tip Drive	Rx Bldg El. 565	R-19 P-LINE
RE-90-24	HPCI Room*	Rx Bldg El. 519	R-21 U-LINE
RE-90-25	RHR West	Rx Bldg El. 519	R-16 U-LINE
RE-90-26	Core Spray-RCIC	Rx Bldg El. 519	R-16 N-LINE
RE-90-27	Core Spray	Rx Bldg El. 519	R-20 N-LINE
RE-90-28	RHR East	Rx Bldg El. 519	R-20 U-LINE
RE-90-29	Suppression Pool	Rx Bldg El. 519	R-19 U-LINE

* Due to the location of the Rad Monitor in relation to the Test line in the HPCI Quad, the HPCI Room Rad Alarm may be received when the HPCI Flow test is in progress.

Probable Cause: Radiation levels have risen above alarm set point. HPCI Flow Rate Surveillance in Progress.

Automatic Action: None

Continued on Next Page

RX BLDG AREA RADIATION HIGH 3-RA-90-1D, Window 22
(Page 2 of 2)

Operator Action:

A. **DETERMINE** area with high radiation level on Panel 3-9-11. (Alarm on Panel 3-9-11 will automatically reset if radiation level lowers below setpoint.) ☐

B. **IF** the alarm is from the HPCI Room while Flow testing is being performed, **THEN**
REQUEST personnel at the HPCI Quad to validate conditions. ☐

C. **NOTIFY** RADCON. ☐

D. **IF** the TSC is **NOT** manned and a "VALID" radiological condition exists., **THEN**
USE public address system to evacuate area where high airborne conditions exist ☐

E. **IF** the TSC is manned and a "VALID" radiological condition exists, **THEN**
REQUEST the TSC to evacuate non-essential personnel from affected areas. ☐

F. **MONITOR** other parameters providing input to this annunciator frequently as these parameters will be masked from alarming while this alarm is sealed in. ☐

G. **IF** a CREV initiation is received, **THEN**
1. **VERIFY** CREV A(B) Flow is ≥ 2700 CFM, and ≤ 3300 CFM as indicated on 0-FI-031-7214(7213) within 5 hours of the CREV initiation. [BFPER 03-017922] ☐
2. **IF** CREV A(B) Flow is **NOT** ≥ 2700 CFM, and ≤ 3300 CFM as indicated on 0-FI-031-7214(7213) **THEN**
PERFORM the following: (Otherwise **N/A**)
[BFPER 03-017922]
   a. **STOP** the operating CREV per 0-OI-31. ☐
   b. **START** the standby CREV per 0-OI-31. ☐

H. **IF** alarm is due to malfunction, **THEN**
REFER TO 0-OI-55. ☐

I. **ENTER** 3-EOI-3 Flowchart. ☐

J. **REFER TO** 3-AOI-79-1 or 3-A01-79-2 if applicable. ☐

References: 3-45E620-3 3-45E610-90-1 GE 730E356-1

RBCCW SURGE TANK LEVEL HIGH 3-LA-70-2A	6

(Page 1 of 2)

Sensor/Trip Point:

3-LS-070-0002A 4 inches above center line of tank

Sensor Location: RBCCW surge tank in the MG set room El 639'.

Probable Cause:
A. Makeup valve, 3-FCV-70-1, open.
B. Bypass valve 3-BYV-002-1369 leaking.
C. Leak into the system.

Automatic Action: None

Operator Action:
A. **CHECK** make-up valve 3-FCV-70-1, 3-HS-70-1, CLOSED on Panel 3-9-4. ☐
B. **CHECK** RBCCW system water leaving the RBCCW system heat exchangers is 100°F or less on 3-TI-70-3, Panel 3-9-4. ☐
C. **DISPATCH** personnel to verify high level and to ensure 3-BYV-002-1369, FCV-70-1 BYPASS VALVE is CLOSED. **OBSERVE** sight glass level. ☐
D. **OPEN** surge tank drain valve, 3-DRV-070-0609. **CLOSE** valve when desired level is obtained. ☐
E. **REQUEST** Chemistry to pull and analyze a sample for total gamma activity and attempt to qualify source of leak. ☐
F. **CHECK** activity reading on 3-RM-90-131B and 3-RM-90-131D. ☐

Continued on Next Page

RBCCW SURGE TANK LEVEL HIGH 3-LA-70-2A, Window 6
(Page 2 of 2)

Operator Action: (Continued)

NOTE
[NER/C] Reactor Recirculation Pump seal cooler leakage may be indicated by a rise in 3-RM-90-131 (Panel 3-9-10) activity (3-RR-90-131/132, Panel 3-9-2 or 3-TE-68-54 or 67 temperature, Panel 3-9-21) or a lowering in any Recirc pump seal pressure.

G. **IF** it is suspected that the Reactor Recirculation Pump seal cooler is leaking, **THEN**
PERFORM the following:
- **DETERMINE** which Reactor Recirculation loop is leaking and **ISOLATE**. **REFER TO** 3-OI-68 Section 7.1 or 8.2 as applicable. Cooldown is required to prevent hangers or shock suppressors from exceeding their maximum travel range. ☐
- **WHEN** primary system pressure is below 125 psig, **THEN** **ISOLATE** the RBCCW System to preclude damage to the RBCCW piping. [IEN89-054, GE SIL-459] ☐

H. **START** selective valving to determine in-leakage source, if present.

References: 3-45N620-4 3-47E610-70-1 3-47E822-1
FSAR Sections 10.6.4 and 13.6.2

EOI - 3

TABLE 4
SECONDARY CONTAINMENT AREA RADIATION

AREA	APPLICABLE RADIATION INDICATORS	MAX NORMAL VALUE MR/HR	MAX SAFE VALUE MR/HR	POTENTIAL ISOLATION SOURCES
RHR SYS I PUMPS	90-25A	ALARMED	1000	FCV-74-47, 48
RHR SYS II PUMPS	90-28A	ALARMED	1000	FCV-74-47, 48
HPCI ROOM	90-24A	ALARMED	1000	FCV-73-2, 3, 81 FCV-73-44
CS SYS I PUMPS RCIC ROOM	90-26A	ALARMED	1000	FCV-71-2, 3, 39
CS SYS II PUMPS	90-27A	ALARMED	1000	NONE
TORUS GENERAL AREA	90-29A	ALARMED	1000	FCV-73-2, 3, 81 FCV-74-47, 48 FCV-71-2, 3
RB EL 565 W	90-20A	ALARMED	1000	FCV-69-1, 2, 12 SDV VENTS & DRAINS
RB EL 565 E	90-21A	ALARMED	1000	SDV VENTS & DRAINS
RB EL 565 NE	90-23A	ALARMED	1000	NONE
TIP ROOM	90-22A	ALARMED	100,000	TIP BALL VALVE
RB EL 593	90-13A, 14A	ALARMED	1000	FCV-74-47, 48
RB EL 621	90-9A	ALARMED	1000	FCV-43-13, 14
RECIRC MG SETS	90-4A	ALARMED	1000	NONE
REFUEL FLOOR	90-1A, 2A, 3A	ALARMED	1000	NONE

EXAMINATION REFERENCE PROVIDED TO CANDIDATE

EOI-3

UNIT 3

EOI-3

TABLE 3
SECONDARY CNTMT AREA TEMP

TABLE 4
SECONDARY CNTMT AREA RADIATION

WHILE EXECUTING THIS PROCEDURE:

IF

THEN

SG/T

SG/L

SG/R

CAUTIONS

CAUTION #1

CURVE 5
RPV SATURATION TEMP

TABLE 6
SECONDARY CONTMT INSTRUMENT RUNS

NOTES

EOI-3

SECONDARY CONTAINMENT CONTROL
UNIT 3
BROWNS FERRY
NUCLEAR PLANT

REV: 9

27. RO 201003K3.03 001/MEM/T2G2/85-3/B11/201003K3.03/3.6/3.7/RO/SRO/11/16/07 RMS

Given the following plant conditions:

- AOI 85-3, CRD System Failure, directs a manual scram based on low reactor pressure.

Which ONE of the following PROCEDURAL reactor pressure limits should be adhered to in this case and WHY?

A. 980 psig reactor pressure, because this would be the lowest pressure a scram can be ensured due to the loss of accumulators.

B.✔ 900 psig reactor pressure, because this would be the lowest pressure a scram can be ensured due to the loss of accumulators.

C. 445 psig reactor pressure, because this would be the lowest pressure required to lift a control rod blade.

D. 800 psig reactor pressure, because this is the Technical Specification pressure for scramming control rods for scram time testing.

K/A Statement:
201003 Control Rod and Drive Mechanism
K3.03 - Knowledge of the effect that a loss or malfunction of the CONTROL ROD AND DRIVE MECHANISM will have on following: Shutdown margin

K/A Justification: This question satisfies the K/A statement by requiring the candidate to use specific knowledge of CRD mechanism limitations and the basis for that limitation related to the ability to effect and maintain shutdown margin.

References: 1/2/3-AOI-85-3, OPL171.005, OPL171.006

Level of Knowledge Justification: This question is rated as MEM due to the requirement to recall or recognize discrete bits of information.

0610 NRC Exam

REFERENCE PROVIDED: None

Plausibility Analysis:

In order to answer this question correctly the candidate must determine the following:

1. The minimum pressure allowed by 1/2/3-AOI 85-3, CRD System Failure.
2. The basis for that minimum pressure.

A is incorrect. This is plausible because 980 psig is the setpoint for the Low Accumulator Pressure alarm.

B is correct.

C is incorrect. This is plausible because the entire statement is accurate, but is not the pressure specified by 1/2/3-AOI 85-3, CRD System Failure.

D is incorrect. This is plausible because the entire statement is accurate, but is not the pressure specified by 1/2/3-AOI 85-3, CRD System Failure.

(a) A specific pattern of control rod withdrawal or insertion

(b) Written step-by-step path used by the operator in establishing the expected rod pattern and flux shape at rated power

(c) Deviation from the established path could result in potentially high control rod worths

(9) Shutdown margin — OBJ. V.B.15.c

(a) Technical specifications of the plant require knowing whether the plant can be shutdown to a safe level

(b) Without the insertion capability of all control rods, shutdown margin will not be as great, thus closer to an inadvertent criticality — Obj. V.B.20.g

(10) Control Rod Worth variables

(a) Moderator temperature — OBJ. V.B.20.e

i. As temperature rises, slowing down length and thermal diffusion length increase — SER 3-05

ii. Rod worth increases with as moderator temperature increases

(b) Void effects on rod worth

i. As voids increase, average neutron flux energy increases

ii. U238 and Pu240 will capture more epithermal neutrons through resonance

4.1 Immediate Actions (continued)

[2] **IF** operating CRD PUMP has tripped **AND** backup CRD PUMP is **NOT** available, **THEN** (Otherwise **N/A**)

PERFORM the following at Panel 1-9-5:

[2.1] **PLACE** CRD SYSTEM FLOW CONTROL, 1-FIC-85-11, in MAN at minimum setting. ☐

[2.2] **ATTEMPT TO RESTART** tripped CRD Pump using one of the following:

- CRD PUMP 1B, using 1-HS-85-2A
- CRD Pump 1A, using 1-HS-85-1A ☐

[2.3] **ADJUST** CRD SYSTEM FLOW CONTROL, 1-FIC-85-11, to establish the following conditions:

- CRD CLG WTR HDR DP, 1-PDI-85-18A, approximately 20 psid. ☐
- CRD SYSTEM FLOW CONTROL, 1-FIC-85-11, between 40 and 65 gpm. ☐

[2.4] **BALANCE** CRD SYSTEM FLOW CONTROL, 1-FIC-85-11, and **PLACE** in AUTO or BALANCE. ☐

[3] **IF** Reactor Pressure is less than 900 psig **AND** either of the following conditions exists:

- In-service CRD Pump tripped and neither CRD Pump can be started, **OR**
- Charging Water Pressure can NOT be restored and maintained above 940 psig, **THEN**

PERFORM the following: (Otherwise **N/A**)

[3.1] **MANUALLY SCRAM** Reactor and **IMMEDIATELY PLACE** the Reactor Mode Switch in the SHUTDOWN position . ☐

[3.2] **REFER TO** 1-AOI-100-1. [Item D20] ☐

(6) The withdraw motion is terminated prior to reaching the desired position and the rod is settled as discussed earlier.

d. Cooling water is continuously supplied via the P-under port and insert header.

(1) Flow from plug type orifice in flange follows passage between outer tube and thermal sleeve to outer screen.

(2) Cooling water is required to protect the graphitar seals from high reactor temperatures. OBJ. V.B.18

(3) Long exposures at high temperatures will result in brittle, fast- wearing seals.

(4) Drive temperature should be maintained at <350°F and the cause should be investigated if it exceeds this value.

(5) Concern is that the high temperature may be caused by a leaking scram discharge valve.

(6) This problem should be corrected as soon as possible to prevent damage to the valve.

e. Scram function

(1) There are two sources of water that can be used to scram a drive: reactor water and accumulator water. OBJ. V.B/E.11, V.D.10

(2) Reactor water scram feature

(a) Reactor water, if at high enough pressure, is capable of scramming the drive without any accumulator assistance. More on required amount of pressure to lift drive and control rod later in LP.

(b) The over-piston area is opened to the scram discharge header.

(2) The primary effect is reduced ID of the inner tube just below the bottom of the collet piston.

(a) In serious overpressure situations, this squeezes the inner tube against the circumference of the index tube.

(b) The index tube is then held in the insert overtravel position and often cannot be withdrawn.

(3) Bulging of the index tube as described above also occurs.

b. Extensive procedural controls are specified to prevent improper valving of the hydraulic module.

c. Particular caution should be observed during the startup test program.

3. Scram Capability

a. Piston areas

(1) Under-piston area equals 4.0 in^2.

(2) Over-piston area equals 2.8 in^2.

b. Normal scram forces

(1) During a normal scram condition, the over-piston area is opened to the scram discharge volume which is initially at atmospheric pressure.

(2) Accumulator and/or reactor pressure is simultaneously applied to the under-piston area. The net initial force applied to the drive (taking no credit for the accumulator) can be calculated as follows.

F_{net} = (Forces Up) - (Forces Down)

F_{net} = (Rx Pressure x Under-Piston Area) - (Rx Pressure x Area of Index Tube + Weight of Blade + Friction)

Note: 4 in^2 upward force - 1.2 in^2 downward force = 2.8 in^2

F_{net} = (1000 psig x 4.0 in^2) - [1000 psig x (4.0 in^2 - 1.2 in^2)] - 255 lbs - ~ 500 lbs

F_{net} = 4000 - 2800 - 255 - 500

F_{net} = 445 lbs (Upward)

c. Single failure proof - There is no single-mode failure to the hydraulic system which would prevent the drive from scramming.

d. Accumulator versus reactor vessel pressure scrams

(1) TP-9 represents a plot of 90 percent scram times versus reactor pressure. TP-9

(a) Reactor pressure only

(b) Accumulator pressure only

(c) Combined reactor and accumulator pressure

(2) Scram times are measured for only the first 90% of the rod insertion since the buffer holes at the top end of the stroke slow the drive.

(3) Reactor-pressure-only scram

(a) As can be seen from TP-9, the drive cannot be scrammed with reactor pressure $\leq$ 400 psig.

(b) The net initial upward force available to scram the drive can be calculated as follows.

e. Average scram times (normal drive) — TP-9

(1) Technical Specifications state that scram times are to be obtained without reliance on the CRD pumps.

(2) Consequently, the charging water must be valved out on the drive to be tested.

(3) Maximum scram time for a typical drive occurs at 800 psig reactor pressure.

(4) This is why Technical Specifications specify that scram times are to be taken at 800 psig or greater reactor pressure.

f. Abnormal scram conditions

(1) Scram outlet valve failure to open

(2) Drive will slowly scram on seal leakage as long as accumulator charging water pressure stays greater than reactor pressure.

(3) If the accumulator is not available, the drive will not scram (this is a double failure).

g. Control Rods failure to Insert After Scram — Obj. V.D.11

(1) This condition could be due to hydraulic lock.

(2) Procedure has operator close the Withdraw Riser Isolation valve. Connect drain hose to Withdraw Riser Vent Test Connection on the affected HCU. Slowly open Withdraw Riser Vent. When inward motion has stopped, close Withdraw Riser Vent.

See 2-OI-85 & 2-EOI App-1E for detailed operations

Self Check
Peer Check

28. RO 201006K4.09 001/MEM/T2G2/RWM//201006K4.09/3.2/3.2/RO/SRO/11/16/07 RMS

The Rod Worth Minimizer must be INITIALIZED to properly determine rod position and sequence.

Which ONE of the following describes how RWM System INITIALIZATION is accomplished?

A. INITIALIZATION occurs automatically when the RWM is unbypassed.

B. INITIALIZATION occurs automatically every 5 seconds while in the transition zone.

C.✔ INITIALIZATION must be performed manually using the INITIALIZATION push-button when the RWM is unbypassed.

D. INITIALIZATION must be performed manually using the INITIALIZATION push-button when power drops below the LPSP.

K/A Statement:
201006 RWM
K4.09 - Knowledge of ROD WORTH MINIMIZER SYSTEM (RWM) (PLANT SPECIFIC) design feature(s) and/or interlocks which provide for the following: System initialization: P-Spec(Not-BWR6)

K/A Justification: This question satisfies the K/A statement by requiring the candidate to use specific of which plant condition would INITIALIZE the RWM.

References: 1/2/3-OI-85, OPL171.024

Level of Knowledge Justification: This question is rated as MEM due to the requirement to recall or recognize discrete bits of information.

0610 NRC Exam
REFERENCE PROVIDED: None

Plausibility Analysis:

In order to answer this question correctly the candidate must determine the following:

1. When RWM INITIALIZATION is required.
2. How RWM INITIALIZATION is accomplished.

A is incorrect. This is plausible because initialization is required when the RWM is unbypassed, but this must be done manually.

B is incorrect. This is plausible because the RWM automatically initiates a "scan/latch" to determine the correct latched rod group, but this is not the same as INITIALIZATION.

C is correct.

D is incorrect. This is plausible because the RWM must be manually INITIALIZED, but the RWM does not require initialization because the LPSP is reached. THe RWM will automatically perform a "scan/latch" at that point.

INSTRUCTOR NOTES

(2) The MANUAL indicator light will then be lit and all error and alarm indications that were on prior to bypass will be blanked out on the RWM system displays. Obj. V.B.6

(3) A manual bypass will also light the RWM and PROGR indicator on the RWM-COMP-PROGR-BUFF pushbutton.

f. SYSTEM INITIALIZE pushbutton switch/indicator

(1) The SYSTEM INITIALIZE switch is depressed to initialize the RWM system.

(2) Initialization must be performed whenever the RWM has been taken off line, as occurs whenever the RWM program is aborted or manually bypassed.

(3) Therefore, following any program abort or bypass, the SYSTEM INITIALIZE switch must be depressed before the program can be run again.

(4) The SYSTEM INITIALIZE window lights white while the switch is held down.

g. SYSTEM DIAGNOSTIC switch/indicator

(1) This switch can be pressed at any time after the system has been initialized to request that the system diagnostic routine be performed.

(2) The RWM program will thereupon be initiated and will perform the routine, which consists of applying and then removing in sequence the insert and withdraw blocks (nominal 10 second frequency).

(3) The operator can verify the operability of the rod block circuits by observing that the INSERT BLOCK and WITHDRAW BLOCK alarm lights come on and then go off as the blocks are

NOTE: Rod insert and withdrawal permit lights will go off when block is applied.

8.18 Reinitialization of the Rod Worth Minimizer

[1] **VERIFY** the following initial conditions are satisfied:

- The Rod Worth Minimizer is available to be placed in operation ☐
- Integrated Computer System (ICS) is available ☐
- The Shift Manager/Reactor Engineer has directed reinitialization of the Rod Worth Minimizer ☐

[2] **REVIEW** all Precautions and Limitations in Section 3.3. ☐

[3] **VERIFY** RWM SWITCH PANEL, 1-XS-85-9025 in NORMAL. ☐

[4] **CHECK** the Manual/Auto Bypass lights are extinguished. ☐

[5] **DEPRESS AND HOLD** INOP/RESET pushbutton. ☐

[6] **CHECK** all four lights (RWM/COMP/PROG/BUFF) are illuminated. ☐

[7] **RELEASE** INOP/RESET pushbutton and **CHECK** all four lights extinguished. ☐

[8] **SIMULTANEOUSLY DEPRESS** OUT OF SEQUENCE/SYSTEM INITIALIZE pushbutton and INOP/RESET pushbutton to place the Rod Worth Minimizer in service. ☐

[9] **IF** Rod Worth Minimizer will **NOT** initialize, **THEN**

DETERMINE alarms on RWM Display Screen and **CORRECT** problems. ☐

[10] **IF** unable to correct problems and initialize RWM, **THEN**

NOTIFY Reactor Engineer. ☐

3.3 Rod Worth Minimizer (RWM) (continued)

N. For group limits only, RWM recognizes the Nominal Limits only. The Nominal Limit is the insert or withdraw limit for the group assigned by RWM. The Alternate Limit is no longer recognized by the RWM as an Acceptable Group Limit.

O. During RWM latching, the latched group will be the highest numbered group with 2 or less insert errors and having at least 1 rod withdrawn past its insert limits.

1. With Sequence Control ON, latching occurs as follows: (Normally, startups will be performed with Sequence Control ON)

   a. RWM will latch down when all rods in the presently latched group have been inserted to the group insert limit and a rod in the next lower group is selected.

   b. RWM will latch up when a rod within the next higher group is selected, provided that no more than two insert errors result.

2. With Sequence Control OFF, latching occurs as follows:

   a. For non-repeating groups, latching occurs as described above, OR

   b. For repeating groups, latching occurs to the next setup or set down based on rod movement as opposed to rod selection.

P. Latching occurs at the following times:

1. System initialization.
2. Following a "System Diagnostic" request.
3. When operator demands entry or termination of "Rod Test."
4. When power drops below LPAP.
5. When power drops below LPSP.
6. Every five seconds in the transition zone.
7. Following any full control rod scan when power is below LPAP.
8. Upon demand by the Operator (Scan/Latch Request function).
9. Following correction of insert or withdraw errors.

29. RO 202001K6.09 001/C/A/T2G2/68 - RECIRC/24/202001K6.09//RO/SRO/

Given the following plant conditions:

- Unit 3 is operating at 55% power with Reactor Feed Pump (RFP) "A" & "C" running and RFP "B" idling.
- Both Recirculation Pump speeds are 53%.
- The "A" RFP trips, resulting in the following conditions:
  - Reactor Water level Abnormal alarm sealed in
  - Reactor Vessel Wtr Level Low Half Scram alarm sealed in
- Indicated Reactor Water Level drops to -10" before RFP "B" is brought on line to reverse the level trend and level is stabilized at 33".

Which ONE of the following describes the steady state condition of both Recirculation Pumps?

A. Running at 53% speed

B. Running at 45% speed

C. ✔ Running at 28% speed

D. Tripped on ATWS/RPT signal.

K/A Statement:
202001 Recirculation
K6.09 - Knowledge of the effect that a loss or malfunction of the following will have on the RECIRCULATION SYSTEM : Reactor water level

K/A Justification: This question satisfies the K/A statement by requiring the candidate to use specific plant conditions and times to determine the effect of a change in reactor water level on the Recirculation System.

References: 3-OI-68, OPL171.007, OPL171.012

Level of Knowledge Justification: This question is rated as C/A due to the requirement to assemble, sort, and integrate the parts of the question to predict an outcome. This requires mentally using this knowledge and its meaning to predict the correct outcome.

0610 NRC Exam

REFERENCE PROVIDED: None

Plausibility Analysis:

In order to answer this question correctly the candidate must determine the following:

1. Did plant conditions exceed the Recirc Runback setpoint.
2. Which Runback is appropriate for the given conditions.

A is incorrect. Total Feedflow would drop below 19% with only one RFP running at 55% rated power, thus initiating a Recirc Runback to 28%. This is plausible based on the initial power level being close enough to create doubt on total feedflow resulting from the trip of one RFP.

B is incorrect. This is plausible because a Recirc Runback DID occur, but the 45% speed given in the distractor is the typical speed the Recirc Pumps run at during startup, not following a RFP trip.

C is correct.

D is incorrect. This is plausible because ATWS/RPT signals are associated with low RPV level, however the setpoint is -45 inches and level only lowered to -10 inches.

3.0 PRECAUTIONS AND LIMITATIONS (continued)

10. The out of service pump may NOT be started unless the temperature of the coolant between the operating and idle Recirc loops are within 50°F of each other. This 50°F delta T limit is based on stress analysis for reactor nozzles, stress analysis for reactor recirculation components and piping, and fuel thermal limits. [GE SIL 517 Supplement 1]

11. The out of service pump may NOT be started unless the reactor is verified outside of regions 1, 2 and 3 of the Unit 3 Power to Flow Map (ICS or Station Reactor Engineering, 0-TI-248).

12. The temperature of the coolant between the dome and the idle Recirc loop should be maintained within 75°F of each other. If this limit cannot be maintained a plant cooldown should be initiated. Failure to maintain this limit and NOT cooldown could result in hangers and/or shock suppressers exceeding their maximum travel range. [GE SIL 251, 430 and 517]

M. Recirc Pump controller limits are as follows:

1. When any individual RFP flow is less than 19% and reactor water level is below 27 inches, speed limit is set to 75%(~1130 RPM speed) and if speed is greater than 75%(~1130 RPM speed), Recirc speed will run back to 75%(~1130 RPM speed).

2. When total feed water flow is less than 19% (15 sec TD) or Recirc Pump discharge valve is less than 90% open, speed limit is set to 28% (~480 RPM speed) and if speed is greater than 28%(~480 RPM speed), Recirc speed will run back to 28%(~480 RPM speed).

3.0 PRECAUTIONS AND LIMITATIONS (continued)

R. The power supplies to the MMR and DFR relays are listed below.

<u>VFD 3A</u>	
I&C BUS A (BKR 215)	3-RLY-068-MMR3/A & DFR3/A
ICS PNL 532 (BKR 30)	3-RLY-068-MMR2/A & DFR2/A
UNIT PFD (BKR 615)	3-RLY-068-MMR1/A & DFR1/A
<u>VFD 3B</u>	
I&C BUS B (BKR 315)	3-RLY-068-MMR3/B & DFR3/B
ICS PNL 532 (BKR 26)	3-RLY-068-MMR2/B & DFR2/B
UNIT PFD (BKR 616)	3-RLY-068-MMR1/B & DFR1/B

S. A complete list of Recirc System trip functions is provided in Illustration 4. The RPT breakers between the recirc drives and pump motors will open on any of the following:

1. Reactor dome Pressure ≥ 1148 psig (ATWS/RPT). (Both pressure switches in Logic A or both pressure switches in Logic B will cause RPT breakers to trip both pumps.) (2 out of 2 taken once logic)

2. Reactor Water Level ≤ -45" (ATWS/RPT). (Both level switches in Logic A or both level switches in Level B will cause RPT breakers to trip both pumps.) (2 out of 2 taken once logic)

3. Turbine trip or load reject condition, when ≥ 30% power by turbine first stage pressure (EOC/RPT).

T. The ATWS/RPT A(B) logic to trip the RPT breakers is defeated if the ATWS/RPT/ARI A(B) manual logic is armed using the arming collar on Panel 3-9-5. B(A) logic would still be functional and trip the RPT breakers if the setpoints are reached. If both manual push-buttons on 3-9-5 are armed, ATWS/RPT automatic logic is totally defeated (no RPT breaker trip will occur if the ATWS/RPT trip setpoints are reached). EOC/RPT logic and ATWS/ARI logic will function without regard to the position of the arming collars. ATWS/RPT/ARI logic can be reset 30 seconds after setpoints are reset.

30. RO 215001A1.01 001/MEM/T2G2/TIP//215001A1.01//RO/SRO/

Which ONE of the following describes the procedural requirements in accordance with 2-OI-94, Traversing In-Core Probe System while running TIP traces?

A. The TIP detector shall be withdrawn to the In-Shield position and the ball valve closed following each TIP trace.

B. Running a TIP trace while personnel are working inside the Drywell is prohibited.

C. ✔ The Radiation Protection Shift Supervisor is required to be notified prior to TIP System operation.

D. The TIP Machine will automatically withdraw to the in-shield position, then the ball valve will automatically close following a PCIS Group 6 isolation.

K/A Statement:
215001 Traversing In-core Probe
A1.01 - Ability to predict and/or monitor changes in parameters associated with operating the TRAVERSING IN-CORE PROBE controls including: Radiation levels: (Not-BWR1)

K/A Justification: This question satisfies the K/A statement by requiring the candidate to determine the operating limitations of the TIP system with respect to high radiation.

References: 2-OI-94 Precautions & Limitations

Level of Knowledge Justification: This question is rated as MEM due to the requirement to recall or recognize discrete bits of information.

0610 NRC Exam

REFERENCE PROVIDED: None

Plausibility Analysis:

In order to answer this question correctly the candidate must determine the following:

1. Limitations for running TIP traces with personnel in the Drywell.
2. Notification requirements prior to running TIPs.
3. Which PCIS Group will cause a TIP retraction and isolation.
4. Requirements for running multiple simultaneous TIP traces.

A is incorrect. This is plausible because that limitation is placed on TIP operation, but only when TIP operation is no longer required. The TIP detector can be stored in the Indexer in-between traces using the same TIP Machine for ALARA concerns.

B is incorrect. This is plausible because specific permission and controls are required to allow this condition, but it is allowable.

C is correct.

D is incorrect. This is plausible because the TIP response to a PCIS isolation is correct, but it is not a Group 6 isolation.

3.0 PRECAUTIONS AND LIMITATIONS

A. [NER/C] Verification of a digit in CORE LIMIT and DETECTOR POSITION windows prior to or during TIP insertion ensures TIPs retain the ability to determine its proper position. This will prevent malfunctions which could damage the TIP detector. [GE SIL-166]

B. To prevent accidental exposure to personnel, immediately evacuate the area if the TIP drive area radiation monitor alarms.

C. [NER/C] Always observe READY light illuminated prior to inserting detector. [GE SIL-166]

D. [NER/C] **DO NOT** move CHANNEL SELECT switch with detector inserted past Indexer position (0001). The common channel interlock can be defeated in this manner resulting in detector and equipment damage. [GE SIL-092]

E. [NER/C] Should detector fail to shift to slow speed when it enters the core, the LOW switch should be turned on, switched to manual mode, and the detector withdrawn. [GE SIL-166]

F. [NER/C] Length of time detector is left in core should be minimized to limit activation of detector and cable. [GE SIL-166]

G. [NER/C] When TIP System operation is not desired, detectors should be retracted and stored in chamber shield with ball valves closed. [GE SIL-166] Storage of detector in Indexer (0001) is allowed only for ALARA concerns and to prevent unnecessary masking of multiple inputs to annunciator RX BLDG AREA RADIATION HIGH 2-RA-90-1D (2-XA-55-3A, Window 22).

H. [NER/C] Upon receipt of a PCIS signal (low reactor water level or high drywell pressure), any detector inserted beyond its shield chamber should be verified to automatically shift to reverse mode and begin withdrawal. Once in shield, ball and purge valves close. [GE SIL-166] Ball valve cannot be reopened until PCIS is reset on Panel 2-9-4 and manual reset of TIP ISOLATION RESET pushbutton 2-HS-94-7D/S2 located on Panel 2-9-13.

I. A detector should not be abruptly stopped from fast speed to off without first switching to slow speed.

J. [NER/C] Drive Control Units (DCU) should be monitored during withdrawal to prevent any chamber shield withdrawal limit from being overrun. Detectors should be stopped manually at shield limit if auto stop limit switch should fail and verify ball valve closes. [GE SIL-166]

K. Only one TIP at a time should be operated when maintenance is being performed in TIP drive area.

3.0 PRECAUTIONS AND LIMITATIONS (continued)

L. [NRC/C] **DO NOT** operate TIPswith personnel inside TIP Room or in vicinity of TIP tubing and Indexers in Drywell. Requirement may be waived with approval of Shift Manager and site RADCON manager or designee. In this instance, RADCON is required to establish such controls as are necessary to prevent access to TIP tubing and Indexer areas to preclude unnecessary exposure to personnel working in Drywell. RADCON Field Operations Shift Supervisor is required to be notified prior to operation of TIP System. [NRC Information Notice 88-063, Supplement 2]

M. No channel should be indexed to common channel 10 unless all other channels are not indexed to channel 10 and all their READY lights are illuminated.

N. [NER/C] **DO NOT** turn MODE switch to OFF on Drive Control Unit if detector is outside shield chamber unless personnel safety requires it. [GE SIL-166] This removes power preventing automatic withdrawal on PCIS signal and causing ball valves to close on cable or detector. Tip Ball Valves CANNOT fully close and shear valves may have to be actuated.

O. CHANNEL SELECT switches on Drive Control Units should always be rotated in clockwise direction when selecting channels.

P. Connector on shear valve indicator circuit should not be removed while testing shear valve explosive charges or performing shear valve maintenance with detector inserted. This will cause an automatic detector withdrawal.

Q. Continuous voice communication should be maintained between TIP operator or maintenance personnel in control room and drive mechanism area while maintenance is being performed and TIP detector driving is necessary.

R. Each applicable ball valve should be opened prior to operating that TIP machine.

S. TIP Drive Mechanisms and Indexers should have continuous purge supply unless required to be removed from service for maintenance.

T. During outages when containment is deinerted for personnel access, TIP Indexer purge supply should be transferred from nitrogen to Control Air for personnel safety.

U. Detector damage is possible if TIP ball valve is left open, or is opened during DRYWELL PRESSURE TEST. (GE SIL-166)

31. RO 216000K1.10 001/MEM/T2G2/PR.INSTR/9/216000K1.10//RO/SRO/

Which ONE of the following indicates how raising recirculation flow affects the Emergency System Range indicators (3-58A -58B) and Narrow Range Indicators (e.g., LI-3-53) on Panel 9-5?

A. No effect on Emergency System Range; Narrow Range will indicate higher.

B. Emergency System Range will indicate higher; Narrow Range will not be affected.

C. Both Emergency System Range and Narrow Range will indicate lower.

D.✔ Emergency System Range will indicate lower and Narrow Range will not be affected.

K/A Statement:
216000 Nuclear Boiler Inst
K1.10 - Knowledge of the physical connections and/or cause- effect relationships between NUCLEAR BOILER INSTRUMENTATION and the following: Recirculation flow control system

K/A Justification: This question satisfies the K/A statement by requiring the candidate to use specific knowledge of the effect of changes in Recirculation flow on reactor water level instrumentation.

References: OPL171.003

Level of Knowledge Justification: This question is rated as MEM due to the requirement to recall or recognize discrete bits of information.

0610 NRC Exam

REFERENCE PROVIDED: None

Plausibility Analysis:

In order to answer this question correctly the candidate must determine the effect of raising Recirc flow on Normal Range and Emergency Systems Range level instrumentation.

A is incorrect. This is plausible because Narrow Range instruments may read slightly higher at colder conditions, but this does NOT apply to Recirc flow changes.

B is incorrect. This is plausible because Narrow Range instruments are not effected by Recirc Flow changes, but Emergency System Range isntruments will read lower.

C is incorrect. This is plausible because Emergency System Range instruments will read lower, but the Narrow Range instruments will not.

D is correct.

INSTRUCTOR NOTES

d. Four ranges of level indication

(1) Normal Control Range (Narrow Range) — Obj. V.B.5

(a) 0 to +60 inch range covering the normal operating range (analog) with +60" up to +70" digital and 0" down to – 10" digital readings. — Obj. V.B.6 TP-3 shows only analog scale

(b) Referenced to instrument zero

(c) Four of these instruments are used by Feedwater Level Control System (FWLCS). The level signal utilized by the FWLCS is not directed through the Analog Trip System.

i. Temperature compensated by a pressure signal — Obj. V.B.11. Obj. V.B.13.

ii. Most accurate level indication available to the operator

iii. Calibrated for normal operating pressure and temperature

(d) These indicators and a recorder point (average of the four) are located on Panel 9-5.

NOTE: An air bubble or leak in the reference leg can cause inaccurate readings in a non-conservative direction resulting in a mismatch between level indicators. — **LER 85-006-02** (See LP Folder) (Section X.C.1.j. provides more detail)

This problem is particularly prevalent after extended outages when starting up from cold shutdown conditions and at low reactor pressures.

INSTRUCTOR NOTES

(e) Four other narrow range instruments are located in the control room, two above the FWLCS level indicators on panel 9-5 (3-208A & D), one above HPCI (3-208B)and one above RCIC (3-208C)on panel 9-3.

Associated with RFPT/Main Turbine and HPCI/RCIC trip instruments

(2) Emergency Systems Range (Wide Range) 2 Analog meters and 2 Digital meters.

(a) -155 to +60 inches range covering normal operating range and down to the lower instrument nozzle return

(b) Referenced to instrument zero

(c) Four MCR indicators on Panel 9-5 monitor this range of level indication.

(d) Calibrated for normal operating pressure and temperature

(e) The level signal utilized by the Wide Range instruments have safety related functions and are directed through the Analog Trip System.

(f) Level indication for this range is also provided on the Backup Control Panel (25-32).

Obj. V.B.12.

(3) Shutdown Vessel Flood Range (Flood-up Range)

(a) 0 to +400 inches range covering upper portion of reactor vessel

(b) Referenced to instrument zero

Calibrated for cold conditions (<212°F, 0 psig)

(c) Provides level indication during vessel flooding or cool down.

INSTRUCTOR NOTES

Transient flashing effects can cause indicated level to oscillate or be erratic. As the reference leg refills, the indicated level approaches a more accurate water level indication. The RVLIS mod decreases the time necessary for this refill to occur

j. Normal Control Range (Narrow Range) and Emergency Systems Range (Wide Range) Level Discrepancies

(1) Narrow Range level instrumentation is calibrated to be most accurate at rated temperature and pressure (particularly the instruments for FWLCS, since they are temperature compensated). At cold conditions the non-FWLCS instruments read high (not temperature compensated).

(2) Wide Range instruments are also calibrated for rated temperature and pressure

(a) The indicated level on the Wide Range (9-5) is also affected by changes in the subcooling of recirculation water and the amount of flow at the lower (variable leg) tap. Obj. V.B.15

(b) At rated conditions with minimum recirculation flow the Wide Range instruments are accurate. As recirculation flow is increased past the lower tap it has a significant velocity head and some friction loss which reduces the pressure on the variable leg to the differential pressure instrument, resulting in an indicated level lower than actual. This could be as much as 10-15 inches error when at rated flow and power.

(c) Due to calibration for rated conditions and no density compensation at cold conditions these instruments read high.

32. RO 219000K2.02 001/C/A/T2G2/OI-74//219000K2.02//RO/SRO/NEW 10/16/07

Given the following plant conditions:

- Unit-2 is at 100% rated power with RHR Loop II in Suppression Pool Cooling mode to support a HPCI Full Flow test surveillance.
- Unit-1 experiences a LOCA which results in a CAS signal initiation on Unit-1.

Which ONE of the following describes the current status of Unit-2 RHR system and what actions must be taken to restore Suppression Pool Cooling on Unit-2?

A. 2A and 2C RHR Pumps are tripped. 2B and 2D pumps are unaffected. No additional action is required.

B. 2B and 2D RHR Pumps are tripped. 2A and 2C pumps are unaffected. Place RHR Loop I in Suppression Pool Cooling immediately.

C. All four RHR pumps receive a trip signal. Place RHR Loop II in Suppression Pool Cooling immediately.

D. All four RHR pumps receive a trip signal. Place RHR Loop II in Suppression Pool Cooling after a 60 second time delay.

K/A Statement:
219000 RHR/LPCI: Torus/Pool Cooling Mode
K2.02 - Knowledge of electrical power supplies to the following: Pumps

K/A Justification: This question satisfies the K/A statement by requiring the candidate to use specific plant conditions and times to determine which RHR pumps can be used for Suppression Pool Cooling.

References: 2-OI-74, OPL171.044

Level of Knowledge Justification: This question is rated as C/A due to the requirement to assemble, sort, and integrate the parts of the question to predict an outcome. This requires mentally using this knowledge and its meaning to predict the correct outcome.

0610 NRC Exam

REFERENCE PROVIDED: None

Plausibility Analysis:

In order to answer this question correctly the candidate must determine the following:

1. Response of Unit-2 RHR pumps due to a Unit 1 CAS initition.
2. Recognize the difference between a Single Unit CAS and Simultaneous Unit CAS.
3. Recognize that Preferred and Non-preferred ECCS pumps do NOT apply with the given conditions.

A is incorrect. This is plausible based on RHR Loop II being the Preferred pumps for Unit-2.

B is incorrect. This is plausible if taken from the perspective of Unit 1 operation, not Unit 2 operation.

C is incorrect. This is plausible because all four RHR pumps on Unit 2 will trip, but they are locked out from manual start for 60 seconds based on D/G and/or Shutdown Board loading concerns.

D is correct.

Appendix A
(Page 2 of 7)

Unit 1 & 2 Core Spray/RHR Logic Discussion

2.2 ECCS Preferred Pump Logic

Concurrent Accident Signals On Unit 1 and Unit 2

With normal power available, the starting and running of RHR pumps on a 4KV Shutdown Board already loaded by the opposite unit's Core Spray, RHR pumps, and RHRSW pumps could overload the affected 4KV Shutdown Boards and trip the normal feeder breaker. This would result in a temporary loss of power to the affected 4KV Shutdown Boards while the boards are being transferred to their diesels. To prevent this undesirable transient, Unit 2 RHR Pumps 2A and 2C are load shed on a Unit 1 accident signal and Unit 1 Pumps 1B and 1D will be load shed on a Unit 2 accident signal. Unit 2 Core Spray Pumps 2A and 2C are load shed on a Unit 1 accident signal and Unit 1 Core Spray Pumps 1B and 1D will be load shed on a Unit 2 accident signal. This makes the Preferred ECCS pumps Unit 1 Division I Core Spray and RHR Pumps and Unit 2 Division 2 Core Spray and RHR Pumps. Conversely, the Non-preferred ECCS pumps are Unit 1 Division 2 Core Spray and RHR Pumps and Unit 2 Division 1 Core Spray and RHR Pumps.

The preferred and non-preferred ECCS pumps are as follows:

UNIT 1 & 2

PREFERRED ECCS Pumps

CS 1A, CS 1C, RHR 1A, RHR 1C
CS 2B, CS 2D, RHR 2B, RHR 2D

NON-PREFERRED ECCS Pumps

CS 1B, CS 1D, RHR 1B, RHR 1D
CS 2A, CS 2C, RHR 2A, RHR 2C

UNIT 3

Unit 3 does not have ECCS Preferred/Non-Preferred Pump Logic.

Accident Signal On One Unit

With an accident on one unit, ECCS Preferred pump logic trips all running RHR and Core Spray pumps on the non-accident unit.

INSTRUCTOR NOTES

Note:

Presently Unit 1 Accident signal will not affect Unit 2 due to DCN H2735A that lifted wires from relays. Unit 2 will still affect Unit 1. However, the following represents modifications to the inter-tie logic as it will be upon Unit 1 recovery.

Obj. V.B.13.
Obj. V.C.3
Obj. V.C.7
Obj. V.D.6
Obj. V.E.II

(1) Unit 1 Preferred RHR pumps are **1A** and **1C**

(2) Unit 2 Preferred RHR pumps are **2B** and **2D**

(3) Unit 2 initiation logic is as follows:Div 1 RHR logic initiates Div 1 pumps (A and C), and Div 2 logic initiates Div 2 pumps (B and D)

f. Accident Signal

Obj. V.B.13.
Obj. V.C.3
Obj. V.C.7
Obj. V.D.6
Obj. V.E.II

(1) LOCA signals are divided into two separate signals, one referred to as a Pre Accident Signal (PAS) and the other referred to as a Common Accident Signal (CAS).

- PAS

  -122" Rx water level (Level 1)

  OR

  2.45 psig DW pressure

- CAS

  -122" Rx water level (Level 1)

  OR

  2.45 psig DW pressure **AND** <450 psig Rx pressure

Note:
It should be clear that the only difference between the two signals is the inclusion of Rx pressure in the CAS signal. The PAS signal is an anticipatory signal that allows the DG's to start on rising DW pressure and be ready should a CAS be received.

(2) If a unit receives an accident signal, then all its respective RHR and Core Spray pumps will sequence on based upon power source to the SD Boards.

(3) All RHR and Core Spray pumps on the non-affected unit will trip (if running) and will be blocked from **manual** starting for 60 seconds.

INSTRUCTOR NOTES

(4) After 60 seconds all RHR pumps on the **non-affected** unit may be **manually** started.

Operator diligence required to prevent overloading SD boards/DG's

(5) The **non-preferred** pumps on the **non-affected** unit are also prevented from **automatically** starting until the affected unit's accident signal is clear.

(6) The **preferred pumps** on the **non-affected** unit are locked out from automatically starting until the affected unit accident signal is clear **OR** the **non-affected** unit receives an accident signal.

g. 4KV Shutdown Board Load Shed

Obj. V.C.8.

(1) A stripping of motor loads on the 4KV boards occurs when the board experiences an undervoltage condition. This is referred to as a 4KV Load Shed. This shed prepares the board for the DG ensuring the DG will tie on to the bus unloaded and without faults.

(2) The Load Shed occurs when an undervoltage is experienced on the board i.e. or if the Diesel were tied to the board (only source) and one of the units experienced an accident signal which trips the Diesel output breaker.

(3) Then, when the Diesel output breaker interlocks are satisfied, the DG output breaker would close and, if an initiation signal is present (CAS) the RHR, CS, and RHRSW pumps would sequence on

(4) Following an initiation of a Common Accident Signal (which trips the diesel breaker), if a subsequent accident signal is received from another unit, a second diesel breaker trip on a "unit priority" basis is provided to ensure that the Shutdown boards are stripped prior to starting the RHR pumps and other ECCS loads

(5) When an accident signal trip of the diesel breakers is initiated from one unit (CASA or CASB), subsequent CAS trips of all eight diesel breakers are blocked.

Occurs due to actuation of the diesel breaker TSCRN relay

33. RO 226001A4.12 001/MEM/T2G2/PC/P//226001A4.12/3.8/3.9/RO/SRO/

Given the following plant conditions:

- A pipe break inside containment results in the below parameters:
  - Drywell pressure is 20 psig
  - Drywell temperature is 210°F
  - Suppression chamber pressure is 18 psig.
  - Suppression chamber temperature is 155°F.
  - Suppression pool level is +2 inches
  - Reactor water level is +30 inches

Which ONE list of parameters below must **ALWAYS** be addressed to determine when it is appropriate to spray the drywell?

A. -Suppression Chamber temperature
-Drywell pressure
-Drywell temperature

B. -Suppression Chamber pressure
-Drywell temperature
-Suppression Pool level

C.✔ -Drywell pressure
-Drywell temperature
-Reactor water level

D. -Reactor water level
-Suppression Chamber temperature
-Drywell pressure

K/A Statement:
226001 RHR/LPCI: CTMT Spray Mode
A4.12 - Ability to manually operate and/or monitor in the control room: Containment/drywell pressure

K/A Justification: This question satisfies the K/A statement by requiring the candidate to use specific knowledge of which containment parameters are used to determine when Containment Sprays can be used.

References: 1/2/3-EOI-2 Flowchart

Level of Knowledge Justification: This question is rated as MEM due to the requirement to recall or recognize discrete bits of information.

0610 NRC Exam

REFERENCE PROVIDED: None

Plausibility Analysis:

In order to answer this question correctly the candidate must determine the following:

1. Drywell temperature and pressure are always required to ensure Curve 5 limits are not exceeded.
2. RPV level is always required to verify adequate core cooling is assured prior to diverting RHR flow for Drywell sprays.
3. Suppression Pool level is always required to verify Suppression Chamber to Drywell vacuum breakers are uncovered.
4. Suppression Chamber pressure is ONLY required when initiating Drywell Sprays from flowpath PC/P.
5. Suppression Chamber temperature is NOT required to initiate Drywell Sprays.

A is incorrect. This is plausible because DW temp and press are required, but SC temp is not.

B is incorrect. This is plausible because DW temp and SP level are required, but SC press is ONLY required when initiating DW Sprays using PC/P.

C is correct.

D is incorrect. This is plausible because RPV level and DW press are required, but SC temp is not.

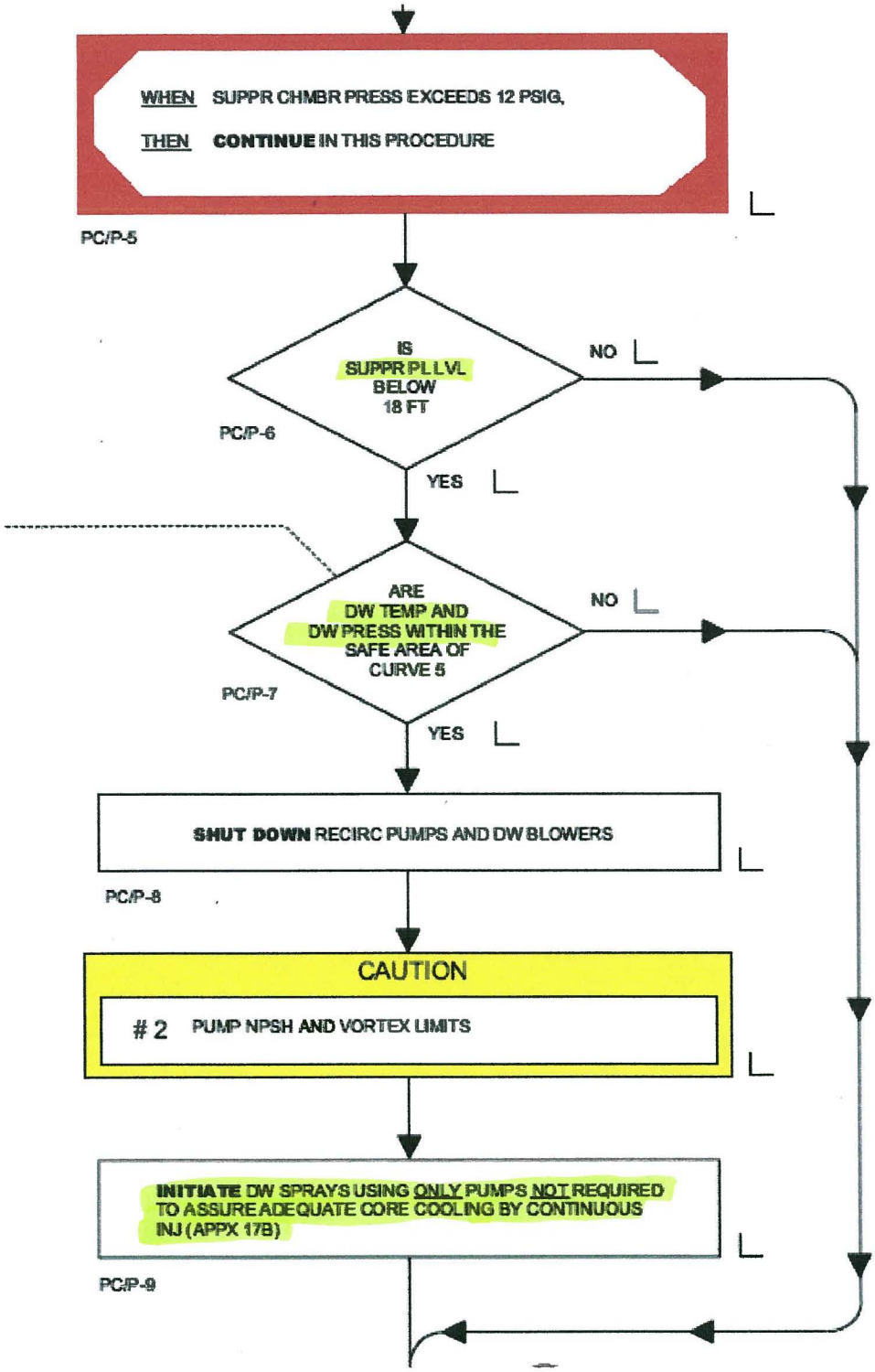
WHEN SUPPR CHMBR PRESS EXCEEDS 12 PSIG,
THEN CONTINUE IN THIS PROCEDURE
PC/P-5
IS SUPPR PL LVL BELOW 18 FT
PC/P-6
NO
YES
ARE DW TEMP AND DW PRESS WITHIN THE SAFE AREA OF CURVE 5
PC/P-7
NO
YES
SHUT DOWN RECIRC PUMPS AND DW BLOWERS
PC/P-8
CAUTION
2 PUMP NPSH AND VORTEX LIMITS
INITIATE DW SPRAYS USING ONLY PUMPS NOT REQUIRED TO ASSURE ADEQUATE CORE COOLING BY CONTINUOUS INJ (APPX 17B)
PC/P-9

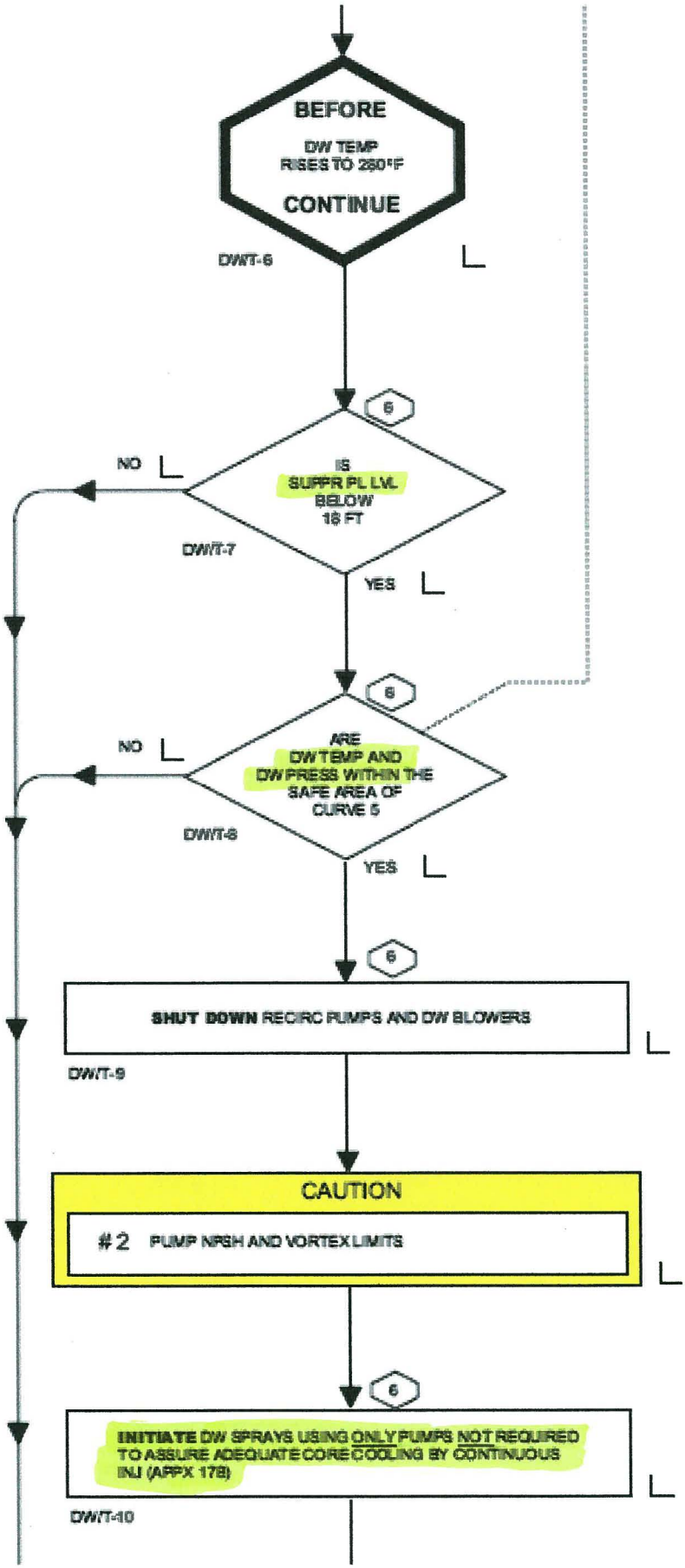
BEFORE
DW TEMP RISES TO 280°F
CONTINUE
DWT-6
6
IS SUPPR PL LVL BELOW 18 FT
NO
DWT-7
YES
6
ARE DW TEMP AND DW PRESS WITHIN THE SAFE AREA OF CURVE 5
NO
DWT-8
YES
6
SHUT DOWN RECIRC PUMPS AND DW BLOWERS
DWT-9
CAUTION
2 PUMP NPSH AND VORTEX LIMITS
6
INITIATE DW SPRAYS USING ONLY PUMPS NOT REQUIRED TO ASSURE ADEQUATE CORE COOLING BY CONTINUOUS INJ (APPX 17B)
DWT-10

34. RO 234000G2.4.50 001/C/A/T2G2///234000G2.4.50//RO/SRO/

Given the following plant conditions:

- Fuel movement is in progress for channel changeout activities in the Fuel Prep Machine.
- Gas bubbles are visible coming from the de-channeled bundle.
- An Area Radiation Monitor adjacent to the SFSP begins alarming.

Which ONE of the following describes the action (s) to take?

Immediately STOP fuel handling, then_____

A. notify RADCON to monitor & evaluate radiation levels.

B.✔ evacuate non-essential personnel from the RFF.

C. evacuate ALL personnel from the RFF.

D. obtain Reactor Engineering Supervisor's recommendation for movement and sipping of the damaged fuel assembly.

K/A Statement:
234000 Fuel Handling Equipment
2.4.50 - Emergency Procedures / Plan Ability to verify system alarm setpoints and operate controls identified in the alarm response manual

K/A Justification: This question satisfies the K/A statement by requiring the candidate to use specific plant conditions to determine the corrective actions involving Fuel Handling equipment under emergency conditions.

References: 1/2/3-AOI-79-1 & 79-2, 1/2/3-ARP-9-3A (W1)

Level of Knowledge Justification: This question is rated as C/A due to the requirement to assemble, sort, and integrate the parts of the question to predict an outcome. This requires mentally using this knowledge and its meaning to predict the correct outcome.

0610 NRC Exam

REFERENCE PROVIDED: None

Plausibility Analysis:

In order to answer this question correctly the candidate must determine the following:

1. Whether indications are consistent with fuel damage or inadvertant criticality.
2. Based on the answer to Item 1 above, enter the appropriate AOI.
3. Immediate Operator Actions for the selected procedure, AOI-70-1.

A is incorrect. This is plausible because RADCON notification is a subsequent action in AOI-70-1, however non-essential personnel evacuation is an IMMEDIATE action.

B is correct.

C is incorrect. This is plausible because evacuation of ALL personnel is an IMMEDIATE action in AOI-70-2, however non-essential personnel evacuation is an IMMEDIATE action in the appropriate AOI.

D is incorrect. This is plausible because RE recommendations are a subsequent action in AOI-70-1, however non-essential personnel evacuation is an IMMEDIATE action.

FUEL POOL FLOOR AREA RADIATION HIGH 2-RA-90-1A	1

(Page 1 of 1)

Sensor/Trip Point:

RI-90-1B
RI-90-2B
RI-90-3B

For setpoints **REFER TO** 2-SIMI-90B.

Sensor Location:	RE-90-1B	El 664'	R-11 P-LINE
	RE-90-2B	El 664'	R-10 U-LINE
	RE-90-3B	El 639'	R-10 Q-LINE

Probable Cause:

A. Change in general radiation levels.
B. Refueling accident.
C. Sensor malfunction.

Automatic Action: None

Operator Action:

A. **CHECK** 2-RI-90-1A, 2-RI-90-2A and 2-RI-90-3A on Panel 2-9-11. ☐
B. **NOTIFY** refuel floor personnel. ☐
C. **IF** Dry Cask loading/unloading activities are in progress, **THEN NOTIFY** Cask Supervisor. ☐
D. **IF** airborne levels rise by 100 DAC **AND** RADCON confirms, **THEN REFER TO** EPIP-1. ☐
E. **REFER TO** 2-AOI-79-1 or 2-AOI-79-2 as applicable. ☐
F. **IF** this alarm is not valid, **THEN REFER TO** 0-OI-55. ☐
G. **IF** this alarm is valid, **THEN**
MONITOR the other parameters that input to it frequently. These other parameters will be masked from alarming while this alarm is sealed in. ☐
H. **ENTER** 2-EOI-3 Flowchart. ☐

References:

0-47E600-13 2-47E610-90-1 2-45E620-3
GE 730E356 Series, TVA Calc NDQ00902005001/EDC63693

1.0 PURPOSE

This instruction provides the symptoms, automatic actions and operator actions for a fuel damage accident.

2.0 SYMPTOMS

A. Possible annunciators in alarm:

1. FUEL POOL FLOOR AREA RADIATION HIGH (2-XA-55-3A, window 1).
2. AIR PARTICULATE MONITOR RADIATION HIGH (2-XA-55-3A, window 2).
3. RX BLDG, TURB BLDG, RF ZONE EXH RADIATION HIGH (2-XA-55-3A, window 4).
4. REACTOR ZONE EXHAUST RADIATION HIGH (2-XA-55-3A, window 21).
5. RX BLDG AREA RADIATION HIGH (2-XA-55-3A, window 22).
6. REFUELING ZONE EXHAUST RADIATION HIGH (2-XA-55-3A, window 34).

B. Gas bubbles visible, in the Spent Fuel Storage Pool and/or Reactor Cavity, attributed to physical fuel damage.

C. Known dropped or physically damaged fuel bundle.

D. Portable CAM in alarm.

E. Radiation level on the Refuel Floor is greater than 25 mr/hr and cause is unknown.

4.0 OPERATOR ACTIONS

4.1 Immediate Actions

[1] **STOP** all fuel handling. ☐

[2] **EVACUATE** all non-essential personnel from Refuel Floor. ☐

4.2 Subsequent Actions

CAUTION

The release of iodine is of major concern. If gas bubbles are identified at any time, Iodine release should be assumed until RADCON determines otherwise.

[1] **VERIFY** secondary containment is intact.
(**REFER TO** Tech Spec 3.6.4.1) ☐

[2] **IF** any EOI entry condition is met, **THEN**

ENTER the appropriate EOI(s). ☐

[3] **VERIFY** automatic actions. ☐

[4] **NOTIFY** RADCON to perform the following:

- **EVALUATE** the radiation levels. ☐
- **MAKE** recommendation for personnel access. ☐
- **MONITOR** around the Reactor Building Equipment Hatch, at levels below the Refuel Floor, for possible spread of the release. ☐

[5] **REFER TO** EPIP-1 for proper notification. ☐

4.2 Subsequent Actions (continued)

[6] **MONITOR** radiation levels, for the affected areas, using the following radiation recorders and indicators:

A. 2-RR-90-1 (points 1 and 2), 2-MON-90-50 (Address 11), 2-RR-90-142 and 2-RR-90-140 (Panel 2-9-2). ☐

B. 2-RM-90-142, 2-RM-90-140, 2-RM-90-143 and 2-RM-90-141 Detectors A and B (Panel 2-9-10). ☐

C. 2-RI-90-1A and 2-RI-90-2A (Panel 2-9-11). ☐

D. 0-CONS-90-362A (Address 09, 10, 08) for Unit 1, 2, 3-RM-90-250, respectively (Panel 1-9-44). ☐

[7] **IF** possible, **MONITOR** portable CAMs & ARMs.

[8] **REQUEST** Chemistry to perform 0-SI-4.8.B.2-1 to determine if iodine concentration has risen. ☐

[9] **NOTIFY** Reactor Engineering Supervisor, or his designee, and **OBTAIN** recommendation for movement and sipping of the damaged fuel assembly. ☐

[10] **OBTAIN** Plant Managers approval prior to resuming any fuel transfer operations. ☐

[11] **WHEN** condition has cleared AND if required, **THEN**

RETURN ventilation systems, including SGTS, to normal. **REFER TO** 2-OI-30A, 2-OI-30B, 0-OI-30F, 0-OI-31, and 0-OI-65. ☐

4.0 OPERATOR ACTIONS

4.1 Immediate Actions

[1] **IF** unexpected criticality is observed following control rod withdrawal, **THEN**

REINSERT the control rod. ☐

[2] **IF** all control rods CANNOT be fully inserted, **THEN**

MANUALLY SCRAM the reactor. ☐

[3] **IF** unexpected criticality is observed following the insertion of a fuel assembly, **THEN**

PERFORM the following: ☐

[3.1] **VERIFY** fuel grapple latched onto the fuel assembly handle AND immediately **REMOVE** the fuel assembly from the reactor core. ☐

[3.2] **IF** the reactor can be determined to be subcritical **AND** no radiological hazard is apparent, **THEN**

PLACE the fuel assembly in a spent fuel storage pool location with the least possible number of surrounding fuel assemblies, leaving the fuel grapple latched to the fuel assembly handle. ☐

[3.3] **IF** the reactor CANNOT be determined to be subcritical **OR** adverse radiological conditions exist, **THEN**

TRAVERSE the refueling bridge and fuel assembly away from the reactor core, preferably to the area of the cattle chute, AND **CONTINUE** at Step 4.1[4]. ☐

[4] **IF** the reactor CANNOT be determined to be subcritical **OR** adverse radiological conditions exist, **THEN**

EVACUATE the refuel floor. ☐

35. RO 245000K6.04 001/C/A/T2G2/OI-35//245000K6.04//RO/SRO/11/28/07 RMS

Given the following plant conditions:

- Unit 2 is operating at 100% power.
- Main Generator is at 1150 MWe.
- The Chattanooga Load Coordinator requires a 0.95 lagging power factor.
- Generator hydrogen pressure is 65 psig.

Which ONE of the following describes the required action and reason if Generator hydrogen pressure drops to 45 psig?

REFERENCE PROVIDED

A. Reduce excitation to obtain a power factor of unity to maintain current generator load. Pole slippage will not occur at this power factor.

B.✓ Reduce generator load below 800 MWe. Sufficient cooling capability still exists at this hydrogen pressure.

C. Reduce generator load below 800 MWe. Pole slippage will not occur at this generator load.

D. Reduce excitation to obtain a power factor of unity to maintain current generator load. Sufficient cooling capability still exists at this hydrogen pressure.

K/A Statement:
245000 Main Turbine Gen. / Aux.
K6.04 - Knowledge of the effect that a loss or malfunction of the following will have on the MAIN TURBINE GENERATOR AND AUXILIARY SYSTEMS : Hydrogen cooling

K/A Justification: This question satisfies the K/A statement by requiring the candidate to use specific plant conditions to determine the effect of a loss of hydrogen cooling on Main Generator operation.

Reference Provided: Generator Capability Curve without axis labeled

Level of Knowledge Justification: This question is rated as C/A due to the requirement to assemble, sort, and integrate the parts of the question to predict an outcome. This requires mentally using this knowledge and its meaning to predict the correct outcome.

0610 NRC Exam

REFERENCE PROVIDED: Generator Capability Curve without the axis labeled.

Plausibility Analysis:

In order to answer this question correctly the candidate must determine the following:

1. Current operating point on the Generator Capability Curve based on given condiions.
2. Recognize that pole slippage is only a concern when operating with a significant leading power factor.
3. Recognize that pole slippage is a result of under excitation, not excessive generator load.
4. Recognize that generator hydrogen pressure is directly related to cooling capability.

A is incorrect. This is plausible because reducing excitation DOES reduce heat generation within the generator, but not sufficient enough to prevent generator damage. However, pole slippage is not a concern at a unity power factor.

B is correct.

C is incorrect. This is plausible because generator load is properly reduced, but the basis for the reduction is not related to slipping poles.

D is incorrect. This is plausible because reducing excitation DOES reduce heat generation within the generator, but not sufficient enough to prevent generator damage. In addition, insufficient hydrogen pressure exists at the current generator load even wih a power factor of unity.