Draft Submittal
(Pink Paper)

Reactor Operator Written Exam

BROWNS FERRY
2008-301

Browns Ferry Nuclear Plant
Operations Training Group

HLT Class 0610 NRC Exam
Reactor Operator

ANSWER KEY REPORT
for 0610 NRC RO Exam Test Form: 0

	ID	Answers
	RO 203000A1.01 1	B
2	RO 205000K4.02 1	C
3	RO 206000K6.09 1	C
4	RO 209001K5.04 1	B
5	RO 211000AK2.01 1	B
6	RO 212000K6.03 1	D
7	RO 215003A4.04 1	C
8	RO 215004A3.03 1	B
9	RO 215005A2.03 1	C
10	RO 217000K2.03 1	C
11	RO 218000K1.05 1	B
12	RO 218000G2.1.24 1	A
13	RO 223002A2.06 1	A
14	RO 223002A3.01 1	B
15	RO 239002A3.03 1	B
16	RO 239002A4.08 1	D
17	RO 259002A4.03 1	C
18	RO 261000K3.06 1	C
19	RO 262001K4.04 1	B
20	RO 262002A1.02 1	C
21	RO 263000K1.02 1	D
	RO 264000K5.06 1	A
	RO 300000K2.02 1	D
24	RO 300000K3.01 1	C
25	RO 400000A2.02 1	B
26	RO 400000G2.4.30 1	D
27	RO 201003K3.03 1	B
28	RO 201006K4.09 1	C
29	RO 202001K6.09 1	C
30	RO 215001A1.01 1	D
31	RO 216000K1.10 1	D
32	RO 219000K2.02 1	D
33	RO 226001A4.12 1	C
34	RO 234000G2.4.50 1	B
35	RO 245000K6.04 1	B
36	RO 268000A2.01 1	A
37	RO 272000K5.01 1	C
38	RO 290003A3.01 1	C
39	RO 295001AK3.01 1	B
40	RO 295001G2.1.14 1	B
41	RO 295003AA2.01 1	C
42	RO 295004AK1.03 1	A
43	RO 295005AA1.04 1	D
44	RO 295006AK3.05 1	B
	RO 295016AA2.04 1	D
46	RO 295018AK2.01 1	B

ANSWER KEY REPORT
for 0610 NRC RO Exam Test Form: 0

	ID	Answers
	RO 295019AA2.02 1	A
48	RO 295021G2.4.50 1	B
49	RO 295023AK1.02 1	C
50	RO 295024G2.1.33 1	A
51	RO 295025EK2.08 1	D
52	RO 295026EA2.01 1	A
53	RO 295028EK3.04 1	A
54	RO 295030EA1.06 1	D
55	RO 295031G2.4.6 1	A
56	RO 295037EK2.11 1	A
57	RO 295038EK1.01 1	C
58	RO 600000AA1.08 1	B
59	RO 295009AK2.01 1	B
60	RO 295012G2.2.22 1	C
61	RO 295015AK1.02 1	C
62	RO 295020AK3.08 1	C
63	RO 295032EA1.01 1	C
64	RO 295033EA2.01 1	B
65	RO 295035EA2.02 1	B
66	RO GENERIC 2.1.33 1	C
67	RO GENERIC 2.1.16 1	D
	RO GENERIC 2.1.18 1	C
	RO GENERIC 2.2.13 1	C
70	RO GENERIC 2.2.33 1	A
71	RO GENERIC 2.3.10 1	B
72	RO GENERIC 2.3.9 1	C
73	RO GENERIC 2.4.47 1	B
74	RO GENERIC 2.4.15 1	B
75	RO GENERIC 2.4.8 1	C

1. RO 203000A1.01 001/C/A/T2G1/RHR/DWSP/1/203000A1.01//RO/SRO/

Given the following conditions:

- Unit 2 has experienced a LOCA.
- Drywell sprays are required in accordance with 2-EOI-2 flowchart.

Which ONE of the following plant conditions must exist to open both the RHR SYS I INBOARD AND OUTBOARD DW SPRAY VALVES?

A. RPV level is < -183 inches (post accident range) with only the CONT SPRAY VLV SEL SWITCH IN SELECT.

B. ✔ RPV level is > -183 inches (post accident range) with only the CONT SPRAY VLV SEL SWITCH IN SELECT.

C. RPV level must be > -150 inches (wide range) with only the 2/3 CORE HEIGHT KEYLOCK BYPASS switch is BYPASS.

D. RPV level must be > -150 inches (post accident range) with only the 2/3 CORE HEIGHT KEYLOCK BYPASS switch is BYPASS.

K/A Statement:

203000 RHR/LPCI: Injection Mode
A1.01 - Ability to predict and/or monitor changes in parameters associated with operating the RHR/LPCI: INJECTION MODE (PLANT SPECIFIC) controls including: Reactor water level

K/A Justification: This question satisfies the K/A statement by requiring the candidate to use specific values of reactor water level to determine the conditions which allow diverting RHR from a LPCI Injection lineup to containment control.

References:

Level of Knowledge Justification: This question is rated as C/A due to the requirement to assemble, sort, and integrate the parts of the question to predict an outcome. This requires mentally using this knowledge and its meaning to predict the correct outcome.

0610 NRC Exam

REFERENCE PROVIDED:

Plausibility Analysis:

In order to answer this question correctly the candidate must determine the following:

1. Drywell sprays being required infers that DW pressure is >2.45 psig.
2. Based on the RPV level conditions given in the available answers, determine whether a CAS signal has been generated due to the LOCA.
3. Which switch(s) must be manipulated to override a CAS signal with the existing conditions.

NOTE: All of these answers are plausible based on minimal procedural guidance given in EOI Appendix 17B. Experience has shown that both switches are manipulated by novice operators regardless of conditions to facilitate Drywell sprays as required. This is not a procedure violation, but demonstrates a lack of specific knowledge of required conditions.

A is incorrect. With RPV level < -183 inches, both the CONT SPRAY VLV SEL SWITCH in SELECT and 2/3 CORE HEIGHT KEYLOCK BYPASS switch in BYPASS are required.

B is correct.

C is incorrect. With RPV level > -150 inches (wide range), only the CONT SPRAY VLV SEL SWITCH in SELECT is required.

D is incorrect. With RPV level < -150 inches (post accident range), only the CONT SPRAY VLV SEL SWITCH in SELECT is required.

3.5 INTERLOCKS (continued)

7. The RHR spray/cooling valves, 2-FCV-74-57(71), receive an auto closure signal in the presence of a LPCI initiation signal and they are interlocked to prevent opening if the in-line torus spray valve, 2-FCV-74-58(72), is not fully closed. The in-line valve interlock can be by-passed if the following conditions exist.

   (1) Reactor level is >2/3 core height and a LPCI initiation signal is present and the select reset switch is in the SELECT position.

   The requirements for >2/3 core height and a LPCI initiation signal may be by-passed using the keylock bypass switch, 2-XS-74-122/30.

8. If primary containment cooling is desired with reactor level at <2/3 core height, the keylock bypass switch is required to be placed in BYPASS before the select reset switch is placed in SELECT to ensure relay logic is made up.

9. The RHR torus spray valves, 2-FCV-74-58(72), have the same in-line valve interlocks as those outlined in Step 3.5A.8 for the torus spray/cooling valves. Additionally these valves have an interlock preventing opening unless drywell pressure is ≥1.96 psig which cannot be bypassed.

10. The RHR torus cooling/test valves, 2-FCV-74-59(73), receive an auto closure signal in the presence of a LPCI initiation signal. Auto closure may be bypassed by the same conditions/actions outlined in Step 3.5A.8.

11. The RHR containment spray valves, 2-FCV-74-60(74) and 61(75), have in-line valve interlocks similar to these described in Step 3.5A.8 through 3.5A.10 for the RHR torus spray valves 2-FCV-74-57(58) and 71(72).

12. If 2-FCV-74-59(73) LOCA CLOSURE TIME light (2-IL-74-59Y Loop I; 2-IL-74-73Y Loop II) on Panel 2-9-3 is extinguished due to its associated valve being opened, that Loop is inoperable for LPCI.

13. If 2-HS-74-148(149) RHR SYSTEM I (II) MIN FLOW INHIBIT switch is in the INHIBIT position, the pumps on that loop do not have automatic minimum flow protection.

6. **INITIATE** Drywell Sprays as follows:

a. **VERIFY** at least one RHRSW pump supplying each EECW header. ____

b. IF.....EITHER of the following exists:

- LPCI Initiation signal is NOT present,

OR

- Directed by SRO,

THEN...**PLACE** keylock switch 2-XS-74-122(130), RHR SYS I(II) LPCI 2/3 CORE HEIGHT OVRD, in MANUAL OVERRIDE. ____

c. **MOMENTARILY PLACE** 2-XS-74-121(129), RHR SYS I(II) CTMT SPRAY/CLG VLV SELECT, switch in SELECT. ____

d. IF.....2-FCV-74-53(67), RHR SYS I(II) LPCI INBD INJECT VALVE, is OPEN,
THEN...**VERIFY CLOSED** 2-FCV-74-52(66), RHR SYS I(II) LPCI OUTBD INJECT VALVE. ____

e. **VERIFY OPERATING** the desired System I(II) RHR pump(s) for Drywell Spray. ____

f. **OPEN** the following valves:

- 2-FCV-74-60(74), RHR SYS I(II) DW SPRAY OUTBD VLV ____
- 2-FCV-74-61(75), RHR SYS I(II) DW SPRAY INBD VLV. ____

g. **VERIFY CLOSED** 2-FCV-74-7(30), RHR SYSTEM I(II) MIN FLOW VALVE. ____

h. IF.....Additional Drywell Spray flow is necessary,
THEN...**PLACE** the second System I(II) RHR Pump in service. ____

i. **MONITOR** RHR Pump NPSH using Attachment 2. ____

j. **VERIFY** RHRSW pump supplying desired RHR Heat Exchanger(s). ____

2. RO 205000K4.02 001/MEM/SYS/RHR//205000K4.02//RO/SRO/11/27/07 RMS

Given the following conditions on Unit 2:

- Reactor level +20"
- Reactor pressure 90 psig
- Drywell pressure 1.7 psig

Which ONE of the following describes which modes of RHR are available for use (consider interlocks only)?

A. LPCI, Drywell Sprays, Shutdown Cooling

B. Suppression Pool Sprays, Shutdown Cooling, Suppression Pool Cooling

C.✔ LPCI, Suppression Pool Cooling, Shutdown Cooling

D. LPCI, Supplemental Fuel Pool Cooling, Drywell Sprays

K/A Statement:

205000 Shutdown Cooling
K4.02 - Knowledge of SHUTDOWN COOLING SYSTEM (RHR SHUTDOWN COOLING MODE) design feature(s) and/or interlocks which provide for the following: High pressure isolation: Plant-Specific

K/A Justification: This question satisfies the K/A statement by requiring the candidate to use specific plant conditions to determine which interlocks apply to those conditions including the High Pressure isolation of RHR SDC mode.

References:

Level of Knowledge Justification: This question is rated as MEM due to the requirement to recall or recognize discrete bits of information.

0610 NRC Exam
REFERENCE PROVIDED:

Plausibility Analysis:

In order to answer this question correctly the candidate must determine the following:

1. Drywell pressure < 1.96 psig prohibit use of containment sprays (DW and SP).
2. RPV Pressure <450 psig allow the use of LPCI Injection.
3. RPV pressure of 90 psig allows the use of Shutdown Cooling.

NOTE: All given answers are plausible since they all contain at least one acceptable lineup with the given conditions.

A is incorrect. Drywell Sprays will not function < 1.96 psig in the Drywell.

B is incorrect. Suppression Pool Sprays will not function < 1.96 psig in the Drywell.

C is correct.

D is incorrect. Supplemental Fuel Pool Cooling will not function based on RPV pressure and Drywell Sprays will not function < 1.96 psig in the Drywell.

INSTRUCTOR NOTES

(3) Can be opened when Rx press is ≤ 450 psig.

NOTE: Effect of Logic failure and valve operation

(4) Automatically opens on LPCI initiation signal when reactor pressure is < 450 psig.

(5) LPCI Injection Valve Open Signal Bypass Switch (Keylock switch on 9-3) can be utilized to bypass the open signal during execution of EOI's. Allows operator to manually (pnl 9-3) close the injection valve

NEW! 10A-S155A(B) Unit 1 and 2 ONLY at this time

(6) The normally open outboard injection valves (1-FCV-74-52,74-66;2-FCV-74-52, 74-66; 3-74-66) have added circuitry so that a fire cannot energize the closing coil and shut the valve (any close signal with the Control Room handswitch in NORMAL. Shorts out the closing coil and blows the control power fuses).

Modifications also disabled the local control "Close" pushbutton on 1-FCV-74-52/66, 2-FCV-74-52/66 and 3-FCV-74-66.

Indicating light informs operators when open signal logic is bypassed.

(7) Control Circuit

	1-74-52	1-74-66	2-74-52	2-74-66	3-74-52	3-74-66
Operate Interlock	74-53	74-67	74-53	74-67	74-53	74-67
Outgoing interlock	74-53	74-67	74-53	74-67	74-53	74-67
Normal/Emerg Sw		X	X		X	
Local Controls	X	X	X	X	X	X
Controls at Bkr		X	X		X	
Panel 9-3 controls	X	X	X	X	X	X
Local Indication lgts	X	X	X	X	X	X
Lights on Bkr		X	X		X	
Lights on Pnl 9-3	X	X	X	X	X	X

k. LPCI inboard injection valves

(74-53; 74-67)

Obj. V.C.5. TP-29, 30, and 31

(1) Normally closed - non-throttling

INSTRUCTOR NOTES

(2) Interlock prevents normal opening unless in-line valve (74-52; 74-66) is fully closed with reactor pressure > 450 psig

Operation of the valve at the breaker using the controls there will bypass the in-line and 450 psig interlock; prevents automatic opening and closure due to logic; and prevent any operation except from breaker

1-74-53 only
1-74-67 only
2-74-53 only
3-74-53 only

(3) Can be opened when Rx pressure is < 450 psig

NOTE: Effect of Logic failure and valve operation NEW! The Redundant logic has been removed.

(4) Automatically opens when Rx pressure < 450 psig with an LPCI initiation signal present and is interlocked open until LPCI initiation signal is cleared and reset.

(5) Only Respective Divisional LPCI Initiation logic will close the valve.

(6) Automatically close (both valves) if:

FCV 74-47 and 48 (S/D Cooling supply valves) open <u>and</u> a Group 2 isolation signal occurs

Automatic closure signal seals in (light indication). Can be reset (FCV 74-53/67 Shutdown Cooling isolation reset pushbuttons) when any of the conditions above are cleared.

Sys I-XS-74-126
Sys II-XS-74-132

Note that this closure signal will prevent opening if an LPCI signal is received.

(7) The normally closed inboard injection valves (2/3-FCV-74-53 and 74-67) have a new App 'R' Emergency Open Switch on the power supply board to bypass all interlocks and other circuitry (except the fully open limit switch) to open the valve.

INSTRUCTOR NOTES

(7) Separate bypass switch allows bypassing interlock from Valves 74-2/13 (74-25/36)

(8) Control Circuit

	1-74-57	1-74-71	2-74-57	2-74-71	3-74-57	3-74-71
Operate Interlock	74-58, 74-2/13	74-72, 74-25/36	74-58, 74-2/13	74-72, 74-25/36	74-58, 74-2/13	74-72, 74-25/36
Outgoing interlock	74-2/13	74-25/36	74-2/13	74-25/36	74-2/13	74-25/36
Normal/Emerg Sw		X	X		X	
Local Controls	X	X	X	X	X	X
Controls at Bkr		X	X		X	
Panel 9-3 controls	X	X	X	X	X	X
Local Indication lgts	X	X	X	X	X	X
Lights on Bkr		X	X		X	
Lights on Pnl 9-3	X	X	X	X	X	X
Bypass Switch	X	X	X	X	X	X

m. RHR Suppression Pool spray valves

(74-58; 74-72)
Obj. V.C.5.
TP-33, 36 and 37

(1) No automatic opening logic

(2) Interlock prevents normal opening if in-line valve not full closed (74-57; 74-71)

(3) Automatically closed and interlocked closed on LPCI initiation signal.

(4) The in-line valve interlock and/or the LPCI closure signal can be bypassed if the following exist:

(a) Reactor level ≥-183 inches and drywell pressure ≥ 1.96 psig and LPCI initiation signal and Select-Reset switch to SELECT position.

(b) Reactor level interlock and LPCI initiation signal may be bypassed by use of keylock bypass switch (XA 74-122/130)

INSTRUCTOR NOTES

(5) Amber light above the "SELECT" switch indicates:

Obj. V.B.11
Obj. V.C.6.

Switch in "Select or Normal after Select"

AND

DWP is ≥1.96 psig

AND

RPV level ≥-183" & have LPCI signal

OR

Keylock in Bypass position

(a) As long as the light remains "on", the valves may be opened and a LPCI signal will not close them.

(b) The in-line interlock valve does not have the DWP interlock, so it is possible to open the Spray valve (58/72) first and then open the in-line valve (57/71) without DWP being ≥1.96 psig

(6) Drywell pressure interlock prevents drawing vacuum on containment under accident condition.

This interlock cannot be bypassed.

(7) Control Circuit

	1-74-58	1-74-72	2-74-58	2-74-72	3-74-58	3-74-72
Operate Interlock	74-57	74-71	74-57	74-71	74-57	74-71
Outgoing interlock						
Normal/Emerg Sw						
Local Controls	X	X	X	X	X	X
Controls at Bkr						
Panel 9-3 controls	X	X	X	X	X	X
Local Indication lgts	X	X	X	X	X	X
Lights on Bkr						
Lights on Pnl 9-3	X	X	X	X	X	X

INSTRUCTOR NOTES

o. Containment Spray valves

(74-60/61; 74-74/75)
Obj. V.C.5
TP-33, 40, 41, 42, 43

(1) No automatic opening logic

(2) IN-line valve interlock prevents normal opening unless other valve fully closed

(3) Automatically closed/interlocked closed on LPCI signal

(4) Automatic closure signal and/or the in-line valve interlock may be bypassed if the following exist:

(a) Reactor level ≥-183 inches and drywell pressure ≥1.96 psig and LPCI initiation signal present and Select=Reset switch placed to SELECT position

(b) Reactor level interlock and LPCI initiation signal may be bypassed by use of keylock bypass switch (XS-74-122/130)

(5) Amber light above the "SELECT" switch indicates:

Obj. V.C.6

Switch in "Select or Normal after Select"

AND

DWP is ≥1.96 psig

AND

RPV level ≥-183" and have LPCI signal

OR

Keylock in Bypass position

(a) As long as the light remains "on", the valves may be opened and a LPCI signal will not close them.

(6) Drywell pressure interlock prevents drawing vacuum on containment under accident condition.

This interlock cannot by bypassed.

(7) Emergency position at breaker bypasses both of the normal control circuits (opening/closing/interlocks)

Obj. V.D.8
U2 & U3-74-60
U1-74-74

3. RO 206000K6.09 001/C/A/SYS/HPCI/4/206000K6.09//RO/SRO/11/27/07 RMS

Given the following plant conditions:

- Unit 2 reactor water level initially lowers to -69 inches.
- Conditions have required entry into EOI-1, RPV Control and EOI-2, Primary Containment Control .
- After water level recovery, the HPCI Pump Injection Valve (73-44) is manually closed and HPCI is placed in pressure control to remove decay heat.
- Subsequently, CST level drops below 6800 gallons.
- Drywell Pressure is now less than 2.45 psig.

Which ONE of the following describes the status of HPCI, assuming NO operator action has been taken other than the pressure control lineup?

A. HPCI would be operating in pressure control with suction from the CST.

B. The HPCI turbine would trip on overspeed due to loss of suction during the transfer.

C. ✔ HPCI would be operating at shutoff head with suction from the suppression pool.

D. HPCI would be pumping to the CST with suction from the suppression pool.

K/A Statement:

206000 HPCI
K6.09 - Knowledge of the effect that a loss or malfunction of the following will have on the HIGH PRESSURE COOLANT INJECTION SYSTEM : Condensate storage and transfer system: BWR-2,3,4

K/A Justification: This question satisfies the K/A statement by requiring the candidate to use specific plant conditions to determine the effect of low CST level on HPCI operation.

References: OPL171.042 Rev 19 Page 36

Level of Knowledge Justification: This question is rated as C/A due to the requirement to assemble, sort, and integrate the parts of the question to predict an outcome. This requires mentally using this knowledge and its meaning to predict the correct outcome.

0610 NRC Exam

REFERENCE PROVIDED: None

Plausibility Analysis:

In order to answer this question correctly the candidate must determine the following:

1. Recognize that the HPCI initiation signal is reset to allow HPCI to be placed in Pressure Control.
2. Recognize that the HPCI Pressure Control lineup if from the CST and back to the CST.
3. Recognize that the current CST level would initiate a suction swap to the SUppression Pool.
4. Recognize that HPCI would not receive a trip signal as the suction valves re-aligned.
5. Recognize that the CST Test Isolation Valve will auto close on low CST level.

A is incorrect. This assumes the low CST level has not initiated the suction swap. This is plausible since the specific level is given using both tank capacity and elevation above sea level.

B is incorrect. HPCI will not trip on low suction pressure under this specific condition. The SP suction valves begin to open before the CST suction valve closes. This is plausible since closure of the suction path to HPCI typically results in a low suction trip.

C is correct.

D is incorrect. This lineup would occur if the HPCI Test Isolation Valve did NOT receive a close signal following the suction swap logic initiation. This is plausible since the ONLY auto closure interlock of the HPCI Test Isolation Valve is under this specific condition.

INSTRUCTOR NOTES

2. If during HPCI operation, suppression pool water level increases to 7" (5.2" on Unit 3) above zero or if CST level drops to 552'6" above sea level (7000 gallons), then HPCI pump suction valves from the suppression pool (73-26 and 73-27) open. (This will then cause the CST suction valve to close once the SP suction valves get full open).

   NOTE: There are normally 300,000 gallons available in the CST for HPCI and RCIC use.

3. A flow switch tapped in parallel with the HPCI system flow controller closes the minimum flow bypass valve to suppression pool (73-30) at 1255 gpm increasing; and opens it at 900 gpm decreasing, only if an auto start signal is present. Minimum flow valve closes on a Turbine Trip signal.

4. If either of the suppression pool suction line isolation valves (73-26 or 73-27) are full open then the HPCI test line to the CST valves (73-35 and 73-36) will close. — Obj. V.B.4, Obj. V.C.4

5. If the HPCI turbine isolation valve (73-16) is fully closed, then gland seal condenser condensate pump discharge valves to clean radwaste (73-17A and 73-17B) will open if the gland seal condenser hotwell has high level.

6. If the HPCI turbine isolation valve (73-16) is fully closed, then HPCI turbine steam line drain pot discharge isolation valves to the main condenser (73-6A and 73-6B) will open.

7. If 73-16 is full closed, the auxiliary oil pump will not start from the control room. When 73-16 opens 10% and the control switch is in the start position, the auxiliary oil pump will run.

8. If the HPCI turbine steam line drain pot level reaches the high level setpoint, then the downstream trap bypass valve (73-5) will open. Unit 1 73-5 has been replaced with a manual valve. — DCN 51221, Unit difference

4. RO 209001K5.04 001/MEM/T2G1/BASIS//209001K5.04//RO/SRO/

During EOI execution when injection from low pressure systems is required to restore and maintain RPV level, Condensate, RHR LPCI Mode and Core Spray are preferred systems if all control rods are inserted. If all control rods are not inserted, Core Spray is not on the list of preferred systems for low pressure injection.

Which ONE of the following describes the basis for this difference?

A. Cold water from Core Spray creates a rapid pressure reduction and cooldown rates cannot be controlled.

B.✔ Core Spray injects directly on the fuel bundles inside the shroud which could damage fuel and cause a power excursion.

C. Core Spray injection creates a steam blanket at the top of the fuel which inhibits heat transfer via steam flow past the fuel.

D. Core Spray flow cannot be throttled for several minutes with an initiation signal present.

K/A Statement:

209001 LPCS
K5.04 - Knowledge of the operational implications of the following concepts as they apply to LOW PRESSURE CORE SPRAY SYSTEM : Heat removal (transfer) mechanisms

K/A Justification: This question satisfies the K/A statement by requiring the candidate to recall the unique heat removal mechanisms of Core Spray and recall a condition where that mechanism can result in unfavorable consequences.

References: EOIPM Section 0-V-K

Level of Knowledge Justification: This question is rated as MEM due to the requirement to recall or recognize discrete bits of information.

0610 NRC Exam

REFERENCE PROVIDED: None

Plausibility Analysis:

In order to answer this question correctly the candidate must determine the following:

1. The bases behind the restriction of Core Spray injection during an ATWS emergency.

A is incorrect. This is plausible since high volume Core Spray injection at close to the maximum injection pressure would cause a rapid pressure reduction, however this is of minor consequence.

B is correct.

C is incorrect. This phenomenom, referred to as Counter Current Flow Instability, is plausible but is only of significant concern with the core completely uncovered and is the basis for removing Spray Cooling from the EPG definition of Adequate Core Cooling.

D is incorrect. This is plausible since RHR LPCI injection valves cannot be throttled for several minutes following a CAS signal. However, Core Spray valves CAN be throttled immediately.

DISCUSSION: STEP C5-16 (Continued)

In comparison to Minimum Zero-Injection RPV Water Level (refer to the discussion of Step C3-3 in the C3, Steam Cooling, Bases), Minimum Steam Cooling RPV Water Level is slightly higher than Minimum Zero-Injection RPV Water Level. This is attributed to two key factors:

1. Injection of subcooled water requires that part of the energy that would be used to generate steam for cooling the uncovered portion of the core must now be expended in heating subcooled liquid to saturation temperature (Minimum Zero-Injection RPV Water Level is calculated assuming no injection into the RPV).

2. More steam is required to maintain clad temperature below 1500 °F as compared to the 1800 °F limit assumed for Minimum Zero-Injection RPV Water Level calculation.

The injection sources listed for use in controlling RPV water level comprise all of those that inject outside of the core shroud. These are used, preferentially, because the flowpath outside the core shroud mixes the relatively cold injected water with warmer water in the lower plenum prior to reaching the core. No priority between use of each listed system is intended, therefore the operator should use the most appropriate means available under current plant conditions.

EOI Appendices 5A, 5B, and 6A provide guidance to operate Condensate/Feedwater, CRD, and only Condensate respectively. These systems are preferred sources of injection since they are of high quality water and are used for RPV water level control during normal plant power operations. Feedwater and CRD both provide high pressure injection from either a steam or motor-driven supply, and Condensate by itself provides for low pressure injection.

EOI Appendices 5C and 5D provide guidance to operate RCIC and HPCI respectively. The operator is instructed to operate RCIC and HPCI with suction from the CST if available, to ensure that the highest quality water is used for injection into the RPV. The CST is the preferred suction source not only because of higher water quality, but also because the CST is not subjected to the temperature increase that the suppression pool is. For these reasons, defeating HPCI high suppression pool suction transfer logic in EOI Appendix 5D, allows the operator to maintain the CST as the suction source. EOI Appendix 5C provides direction to defeat the RCIC low RPV pressure isolation interlock, that allows operation of the RCIC turbine at low pressure. Even if RPV pressure is below the isolation setpoint, but above turbine stall pressure, RCIC can still provide some injection into the RPV.

EOI Appendices 6B and 6C provide guidance to operate LPCI Systems I and II respectively. The operator is instructed to only operate RHR in LPCI mode when suppression pool level is above <A.62>. Engineering calculations have determined that operation of RHR pumps below a suppression pool level of <A.62> may induce vortex formation at the system suction strainer.

DISCUSSION: STEP C5-30

This signal step informs the operator that actions to control RPV pressure control must immediately change because of present plant conditions.

When emergency RPV depressurization is required, the operator shall transfer RPV pressure control actions from the RC/P Section of EOI-1, RPV Control, to C2, Emergency RPV Depressurization.

This step has been reached in this procedure because previous attempts to maintain adequate core cooling have been unsuccessful, or plant conditions are such that emergency RPV depressurization is required, as indicated by a signal step in another EOI being concurrently executed.

If adequate core cooling cannot be assured, then plant conditions may be such that RPV water level is at or below TAF, and RPV pressure is high enough to prevent injection from low-head pumps. Therefore, emergency RPV depressurization is required for the purpose of maximizing injection flow from high-head pumps and to permit injection from low-head pumps.

Depressurizing the RPV is preferred over restoring RPV water level through the use of systems that inject inside the shroud because:

1. A large reactor power excursion may result from the in-shroud injection of relatively cold water.

2. Rapid depressurization, by itself, will shut down the reactor due to a substantial increase in voids.

3. Following the depressurization, reactor power will stabilize at a lower level.

DISCUSSION: STEP C5-38

Caution #5 applies throughout performance of Step C5-38. Caution #5 is identified at this step to highlight the potential for large power excursions and subsequent core damage if cold, unborated water is rapidly injected using injection sources within Step C5-38.

This action step directs the operator to use injection sources listed to restore and maintain RPV water level above <A.71>. System specific EOI Appendices provide step-by-step guidance for lining up and injecting into the RPV. Injection pressures (<A.1>) have also been provided as additional information to the operator.

Engineering calculations have determined that when RPV water level is at or above <A.71>, adequate core cooling is still assured. The value of <A.71> RPV water level is Minimum Steam Cooling RPV Water Level. Refer to discussion of Step C5-16 for more information on Minimum Steam Cooling RPV Water Level.

This step has been reached only when RPV water level cannot be restored and maintained above <A.71> using preferred systems. Therefore, use of additional systems is required that either inject inside the core shroud, are difficult to lineup, or take suction on sources of comparatively lower water quality. No priority between use of each listed system is intended, therefore, the operator should use the most appropriate means available under current plant conditions.

EOI Appendices 6D and 6E provide guidance to operate CS Systems I and II. CS provides relatively high quality water from the suppression pool and can provide injection into the RPV quicker than other sources listed in this step. However, reactor power excursions are more probable since CS injects directly into the core shroud at high flowrates. Therefore, extreme caution should be used for CS injection at this step.

Unlike directions given for use of motor driven pumps in EOI-1, RPV Control, CS System operation is not restricted by pump NPSH and Vortex limits (suppression pool level). Even though risk of equipment damage exists if NPSH and Vortex limits are exceeded, immediate and catastrophic pump failure is not expected should operation beyond these limits be required. Since prolonged operation under these conditions is most likely required before degraded system and pump performance may result, the undesirable consequences of uncovering the reactor core outweigh risk of equipment damage.

EOI Appendices 7C, 7E, and 7F provide guidance to inject RHR into the RPV from crossties to other units or through RHR Drain Pumps A and B. EOI Appendix 7G provides guidance to inject into the RPV with PSC Head Tank Pumps. All of these injection sources provide suppression pool water at low pressure, but are relatively complicated to line up.

5. RO 211000AK2.01 001/C/A/T2G1/3/06/63/V.B.5/211000AK2.01/2.9/3.1/RO/SRO/10/27/2007

Given the following plant conditions:

- Unit 1 is operating at 75% power.
- A fire is discovered inside 480V Shutdown Board 1B causing a loss of the 480v Shutdown Board 1B.
- Fire Protection reports that the fire cannot be extinguished.
- The US directs a manual scram.
- Not all control rods insert, and the following conditions are noted:
  - Reactor Power 15%
  - Suppression Pool Temperature 108°F and rising
- The "A" 4KV Shutdown Board deenergized when 1A RHR pump was started for pool cooling.

Which ONE of the following describes the action and method of injecting boron into the reactor?

A. Transfer 1B 480v Shutdown board and inject SLC using 1B SLC pump.

B.✓ Transfer 1A 480v Shutdown board and inject SLC using 1A SLC pump.

C. Transfer 1B 480v RMOV board and inject SLC using 1B SLC pump.

D. Transfer 1A 480v RMOV board and inject SLC using 1A SLC pump.

K/A Statement:

211000 SLC
K2.01 - Knowledge of electrical power supplies to the following: SBLC pumps

K/A Justification: This question satisfies the K/A statement by requiring the candidate to correctly identify the power supplies to the SLC pumps.

Level of Knowledge Justification: This question is rated as C/A due to the requirement to assemble, sort, and integrate the parts of the question to solve a problem. This requires mentally using this knowledge and its meaning to resolve the problem.

0610 NRC Exam

REFERENCE PROVIDED: None

Plausibility Justification:

Answer A is not correct. Due to the loss if "A" 4KV Shutdown Board, the 1A 480V Shutdown Board has lost power. This is plausible if the candidate is not aware that the 480V Shutdown Board does not automatically transfer to Alternate the same as the 4KV Shutdown Board.

Answer B is not correct because the B 480V Shutdown Board is unavailable due to a fire. This answer is plausible if the operator does not know the correct power supply to SLC pumps.

Answer C is the correct answer. Manually transferring 1A 480V Shutdown Board to Alternate will restore power to the board and allow starting 1A SLC pump.

Answer D is not correct because the power supply to 1A SLC is not 1A 480V RMOV Board. It is plausible because 1A 480V RMOV Board is safety related and powered from the same DG as 1A 480V Shutdown Board.

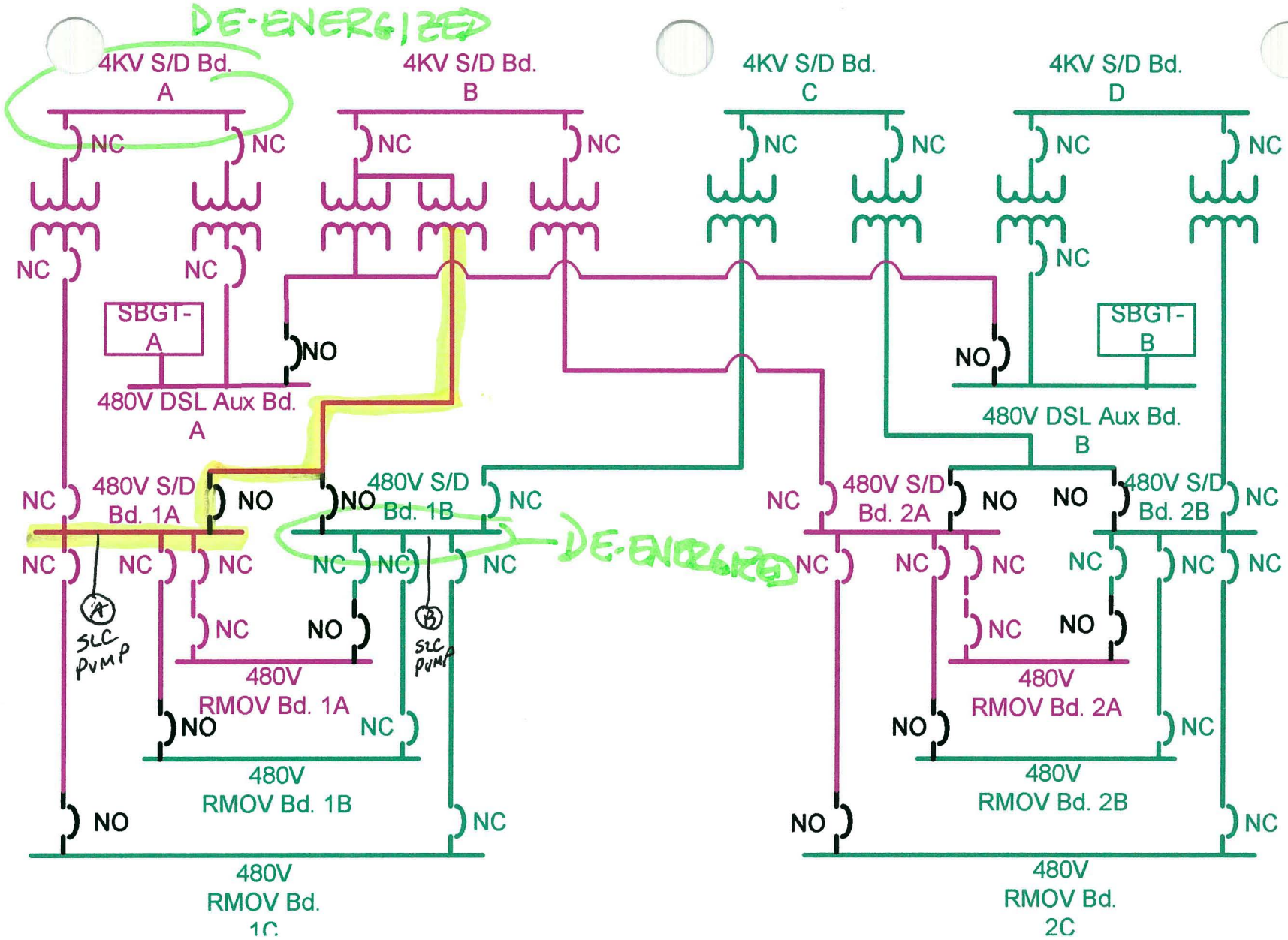

TP-1: Unit 1-2 480V Power Distribution

INSTRUCTOR NOTES

4. SLC Pumps

a) Two 100% capacity, triplex, positive displacement piston pumps are installed in parallel. — Obj. V.B.5.c, Obj. V.C.4.d, Obj. V.D.4, Obj. V.E.4

b) 'A' pump is powered from 480V Shutdown Board A. — Obj. V.B.5.c

c) 'B' pump is powered from 480V Shutdown Board B. — Obj. V.C.4.d

d) Electrically interlocked so that only one pump will run at a time. This prevents system overpressurization. — Obj. V.B.3.f, Obj. V.C.2.f

e) The pumps are manually started from the main control room using the key-lock switch on panel 9-5, or locally, using the Test Permissive Transfer Switch at Panel 25-19.

f) A control room start signal will fire the explosive valves. A local start will <u>not</u> fire the explosive valves.

g) Either pump is capable of supplying a system flow of approximately 50 gpm at a system pressure of 1275 psig. — Obj. V.D.3.d, Obj. V.E.3.d

h) Each pump discharge has a relief valve, set at 1425 ± 75 psig, to protect the pump and the system from overpressurization. — Obj. V.B.3.f, Obj. V.C.2.f, Obj. V.D.3.e, Obj. V.E.3.e

i) Each pump contains internal suction and discharge check valves, which open at approximately 5 psid, allowing only forward flow through an idle pump. (INPO O&MR 341).

j) Pump motors are protected by an undervoltage trip.

5. Accumulators

a) An accumulator is installed between each pump and its discharge check valve.

b) Dampens the pressure pulsations that are inherent with piston-type, positive-displacement pumps. — Obj. V.D.3.d, Obj. V.E.3.d

c) A steel vessel accumulator, containing a synthetic bladder, with one side charged to ~450 psig nitrogen gas and SLC solution on the other side.

6. RO 212000K6.03 001/MEM/T2G1/RPS//212000K6.03//RO/SRO/

Given the following plant conditions:

- Reactor water level instrument LIS-3-203A has failed downscale.

Which ONE of the following describes the Analog Trip System Response?

The trip relay will be _____ and the contact in the RPS logic will be _____.

A. energized, closed

B. energized, open

C. deenergized, closed

D.✔ deenergized, open

K/A Statement:

212000 RPS
K6.03 - Knowledge of the effect that a loss or malfunction of the following will have on the REACTOR PROTECTION SYSTEM : Nuclear boiler instrumentation

K/A Justification: This question satisfies the K/A statement by requiring the candidate to use specific plant conditions involving level instrumentation to determine the response of RPS logic components.

References:

Level of Knowledge Justification: This question is rated as C/A due to the requirement to assemble, sort, and integrate the parts of the question to predict an outcome. This requires mentally using this knowledge and its meaning to predict the correct outcome.

0610 NRC Exam
REFERENCE PROVIDED: None

Plausibility Analysis:

In order to answer this question correctly the candidate must determine the following:

1. Whether RPS relays are normally emergeized or de-energized.
2. Whether RPS contacts fed from relays are normally open or closed.
3. Recall which scram signal, if any, is fed from LIS-3-203A.

A is incorrect. This is plausible if the novice operator fails to recognize a valid trip has been generated by LIS-3-203A.

B is incorrect. This is plausible if the novice operator confuses PCIS logic relay response with RPS logic relay response.

C is incorrect. This is plausible if the novice operator confuses PCIS logic relay response with RPS logic relay response and fails to recognize a valid trip has been generated by LIS-3-203A..

D is correct.

RPS LOGIC

INSTRUCTOR NOTES

(2) The third is used to produce manual SCRAM trip signals (trip channel A3).

(3) The channels for trip system B are designated B1, B2 and B3.

c. Both of the automatic channels in each trip system monitor critical reactor parameters. — Obj. V.B.5.c, Obj. V.D.4

(1) At least four channels for each monitored parameter are required for the trip system logic. — TP-3, Drawing 2-730E915RF-11, 2-730E915RF-12

(2) If either of the two channels sense a parameter which exceeds a setpoint, then this would place the associated trip system (A or B) into a tripped condition.

(3) To produce a SCRAM, both trip systems must be tripped. This is called a "one-out-or-two-taken twice" arrangement.

d. Each trip system logic may also be manually tripped. — TP-4

(1) Each Trip system contains manual SCRAM switches on Panel 9-5 which cause a trip in the respective trip system when actuated. — Drawing 2-730E915RF-11, 2-730E915RF-12

(2) The Reactor mode switch has contacts in both the A3 and B3 channels. Placing the reactor mode switch in SHUTDOWN will result in a trip of both trip systems.

(3) A trip in both channels A3 and B3 initiates a reactor SCRAM.

e. During normal operation — SER 3-05 Operator fundamentals

(1) All sensor and trip contacts essential to safety are closed.

(2) Channels, logics, and actuators are energized.

RPS LOGIC

INSTRUCTOR NOTES

(3) When a SCRAM signal is received, the logic relays deenergize to cause a SCRAM.

Drawing 2-730E915-13

(4) Loss of power to one RPS bus will result in a half-SCRAM. Loss of power to both RPS buses will result in a full SCRAM.

Obj. V.B.3
Obj. V.C.3
Obj. V.D.8

4. Reactor SCRAM Signals and Arrangement
Refer to OI-99 for the setpoints for each SCRAM.

Obj. V.B.6
Obj. V.C.4
SER 3-05 Operator fundamentals

a. Channel test switch

(1) Allows for testing each channel's trip function.

Drawing
2-730E915RF-11
2-730E915RF-12

(2) Four, one per channel located on Panel 9-15 and 9-17 in Aux. Inst. Room.

REACTIVITY MANAGMENT
Discuss when switches can be used.

(3) Key-locked, two positions - NORMAL and TRIP

(4) TRIP de-energizes that channel's relays producing a half-SCRAM.

b. Turbine Stop Valves, 10 percent closure anticipates the pressure and neutron flux rise caused by the rapid closure of the Turbine Stop Valves.

TP-5
Drawing
2-730E915-9, 10
Obj. V.D.5

(1) Each of the four Turbine Stop Valves is equipped with two limit switches. One limit switch is assigned to RPS "A" and one to RPS "B".

(2) These switches will provide a valve-closed signal to the RPS trip logic.

(3) The position switch contacts are arranged so that any two Stop Valves can be closed causing no more than a half-SCRAM.

Drawing
2-730E915RF-11
2-730E915RF-12

(4) Closure (< 90% full open) of any combination of three Stop Valves will cause a full SCRAM in all cases.

PCIS LOGIC

C. Typical PCIS Isolation Logic

TP-1

1. A typical logic arrangement for the PCIS valves (except MSIVs) is shown in TP-1. This figure shows that two separate trip channels (A and B) are each provided with two sensor relay contacts (A/C and B/D).

PCIS de-energizes to isolate (except HPCI/RCIC)

Obj. V.B.1
Obj. V.C.1

a. This arrangement creates trip subchannels A1/A2 and B1/B2.

b. A trip of either sensor relay within a trip channel will cause opening of the associated contact and de-energization of the associated relay. This condition will create a "half isolation" signal within both logic channels but NO VALVE MOVEMENT.

HPCI/RCIC are energize to actuate

Obj. V.B.3
Obj. V.C.3

c. Should a trip of either sensor relay in the other trip channel occur, conditions will exist to de-energize the valve actuation relays in each logic channel, causing both isolation valves to close.

PCIS logic is arranged as follows:

A1 **OR** A2
AND
B1 **OR** B2

= **Inboard AND Outboard** valve closure

Note: Most PCIS logic is assembled as above. The MSL drains however are an exception.

The MSL drain logic is as follows:

A1 **AND** B1 = I/B valve closure

A2 **AND** B2 = O/B valve closure

7. RO 215003A4.04 001/MEM/SYS/IRM/B6/215003A4.04//RO/SRO/

Given the following plant conditions:

- Unit 1 reactor startup preparations are in progress with no rods withdrawn.
- Instrument Mechanics are performing the IRM functional surveillance.
- No IRMs are currently bypassed.
- The Instrument Mechanic Technician has depressed (and held) the "INOP INHIBIT" pushbutton for "H" Channel IRM.

Which ONE of the following describes the IRM trips that are bypassed as a result of this action, if any?

A. The IRM "Loff of ± 24 VDC" inop trip is bypassed.

B. IRM "High Voltage Low" trip is bypassed.

C. ✔ The IRM mode switch "out of operate" inop trip is bypassed.

D. The IRM "Module unplugged" inop trip is bypassed.

K/A Statement:

215003 IRM
A4.04 - Ability to manually operate and/or monitor in the control room: IRM back panel switches, meters, and indicating lights

K/A Justification: This question satisfies the K/A statement by requiring the candidate to use specific component manipulations to correctly determine the response of the IRM system.

References:

Level of Knowledge Justification: This question is rated as MEM due to the requirement to recall or recognize discrete bits of information.

0610 NRC Exam

REFERENCE PROVIDED: None

Plausibility Analysis:

In order to answer this question correctly the candidate must determine the following:

1. The function wich is bypassed by the INOP INHIBIT pushbutton.

NOTE: Each of the possible answers below will typically initiate an INOP trip of it's associated IRM channel, therefore each distractor is plausible.

A is incorrect. This INOP trip will still function.

B is incorrect. This INOP trip will still function.

C is correct.

D is incorrect. This INOP trip will still function.

INSTRUCTOR NOTES

E. Trips — TP-10

1. Rod blocks — Obj.V.D.7, V.B.5 Obj. V.C.3.,

Block	Setpoint	When Bypassed	
Downscale	≤ 7.5	Range 1 or RUN	
High	≥ 90	RUN Mode	Obj. V.B.6. Obj. V.C.4.
INOP	-HV low (<90v) -Module unplugged -Function switch not in OPERATE -Loss of ±24VDC	RUN Mode	Obj. V.B.5
Detector Wrong Position	Detector Not Full IN	RUN Mode	Obj.V.B.13

2. Scrams — TP-11

Scrams	Setpoint	When Bypassed	Obj. V.B.7. Obj. V.C.5. Obj.V.D.8
High-High	≥ 116.4	In RUN Mode	
INOP	-HV low (<90v) -Module unplugged -Function switch not in OPERATE -Loss of ±24VDC	In RUN Mode	

F. Controls Provided

1. Panel 9-5

a. Recorder switches switch between IRM channels and APRM/RBM channels

b. Range switches allow operator to select appropriate IRM range to maintain indications between 25 to 75 on 0-125 scale. 0-40 scale is no longer utilized.

INSTRUCTOR NOTES

(2) 'Standby' - same as operate, except gives Inop trip to yield maximum design protection before channel is removed from service.

(3) 'Zero 1' - Removes signal from output amplifier so that output amplifier, local meter and recorder can be zeroed.

(4) 'Zero 2' - Removes voltage from range switch. This deselects all ranges. This, in turn, causes no input to be sent to attenuator and allows setting the zero adjust on output amplifier.

(5) '125 '- Input is removed from attenuator same as Zero 2 position. A calibration signal is substituted which will yield 125 on the 125 scale. Used to set gain of output amplifier.

(6) '40' - Produces a 40 reading on the 125 scale.

c. INOP/INHIBIT Pushbuttons

Obj. V.B.6
Obj. V.C.4

(1) Pushed to bypass the INOP trip that results from taking mode switch S-1 out of "operate."

(2) Used to allow testing of other scram or rod block signals from the IRM drawer into RPS/RMCS without them being masked by the INOP trip.

DCN W18726A replaced the INOP/INHIBIT Pushbutton with a toggle switch for the U-3 IRM drawers. (UNIT DIFFERENCE)

8. RO 215004A3.03 001/C/A/T2G1/SRM/B8/215004A3.03//RO/SRO/

Given the following plant conditions:

- A reactor startup is in progress following refueling, with all RPS shorting links removed.
- The reactor is approaching criticality.
- A loss of the High Voltage power supply to the B SRM detector results in the INOP trip and Panel 9-5 alarm on SRM HIGH/INOP.

Which ONE of the following describes the plant response?

A. Alarms only.

B.✔ A Rod Out Block only.

C. A Rod Out Block and 1/2 Scram.

D. A Rod Out Block and Full Reactor Scram.

K/A Statement:

215004 Source Range Monitor
A3.03 - Ability to monitor automatic operations of the SOURCE RANGE MONITOR (SRM) SYSTEM including: RPS status

K/A Justification: This question satisfies the K/A statement by requiring the candidate to use specific plant conditions to correctly determine the response of the SRM with the shorting links removed.

References:

Level of Knowledge Justification: This question is rated as C/A due to the requirement to assemble, sort, and integrate the parts of the question to predict an outcome. This requires mentally using this knowledge and its meaning to predict the correct outcome.

0610 NRC Exam

REFERENCE PROVIDED: None

Plausibility Analysis:

In order to answer this question correctly the candidate must determine the following:

1. The IRM response to the high voltage power supply failure under typical conditions.
2. The IRM response to the same conditions with the shorting links removed.

NOTE: This question initially appears to have Low Discriminatory Value but received a 100% failure rate during validation. Every Licensed Operator chose Answer D, believing a scram signal was generated. However, I feel this question is appropriate for the K/A and SHOULD remain in the exam.

A is incorrect. A Control Rod Block is generated.

B is correct.

C is incorrect. This is plausible if the novice operator determines a scram signal is generated with the typical "1-out of-2 taken twice" logic. However, only SRM Hi-Hi generates an input to RPS.

D is incorrect. This is plausible if the novice operator determines a scram signal is generated. However, only SRM Hi-Hi generates an input to RPS.

3.0 PRECAUTIONS AND LIMITATIONS

A. To prevent a rod withdrawal block when withdrawing SRMs, SRM count rate is required to be above Retract Permit (145 counts per second) or all unbypassed IRM channels are set to Range 3 or above and indicating above their downscale trip point (7.5 on 125 scale).

B. Only one SRM channel can be bypassed at a time.

C. In order to prevent an inadvertent rod withdrawal block or Reactor scram (with shorting links removed) while operating the SRM BYPASS selector switch, 1-HS-92-7A/S3,

- Verify the previously bypassed channel returns to normal status by observing the applicable HIGH HIGH and HIGH or INOP status lights are extinguished prior to selecting any other channel to be bypassed.

- After bypassing a channel, the applicable BYPASSED status light should be illuminated prior to testing, operating, or working on that channel.

D. To prevent SRM detector drive damage, the CRD service platform should be locked in the stored position with key removed to allow free movement of SRMs.

E. In order to minimize their exposure, SRM detectors should be fully withdrawn from the core when IRMs are on range 3 or above and indicating above their downscale trip point.

F. Illustration 1 lists trip signals and associated actions for the Source Range Monitoring System.

G. The Reactor Protection System in conjunction with the Neutron Monitoring System (SRM and IRM) has non-coincident trip logic if all eight shorting links are removed. If only the yellow, green, and red shorting links (six total) are removed, the SRM High-High trips will be placed in a one-out-of-two taken twice logic.

H. The time required to drive a detector from full-out to full-in is approximately 3 minutes.

I. The INOP/INHIBIT switches, located on Panel 1-9-12 SRM drawers, bypass the SRM switch position out-of-operate trip. These switches are to be used only during testing of SRM channels.

J. [NRC/C] Upon return to service of 24 VDC Neutron Monitoring Battery A or B, Instrument Maintenance is required to perform functional tests on SRMs and IRMs that are powered from the affected battery board. [NRC IE Inspector Followup Item 86-40-03]

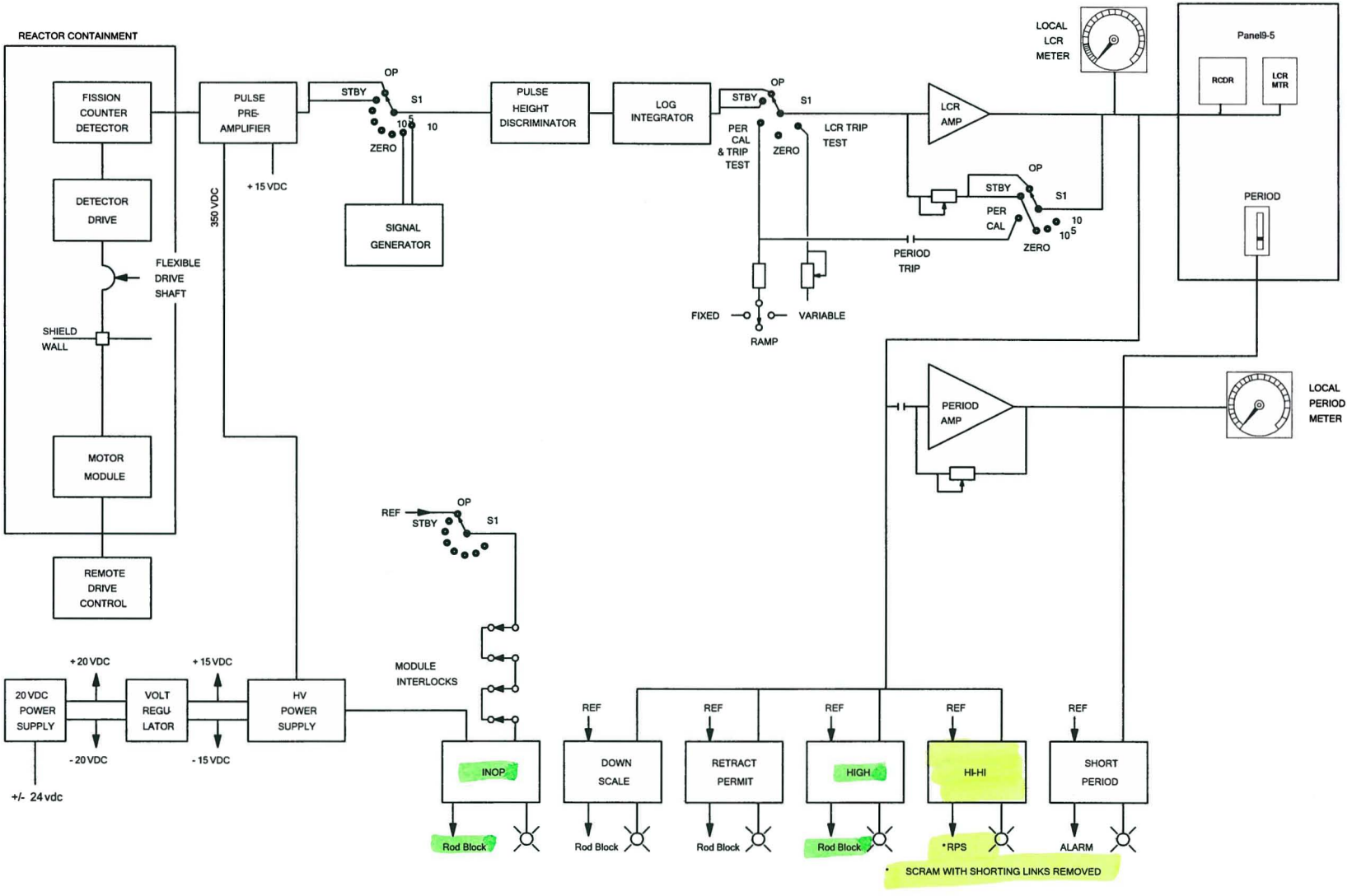

TP-1: SOURCE RANGE MONITORING CHANNEL FUNCTIONAL BLOCK DIAGRAM

9. RO 215005A2.03 001/C/A/T2G1/PRNM/APRM/B7/215005A2.03//RO/SRO/

Which ONE of the following describes the expected response due to a "FAULT" in an APRM channel and the required action(s), if any, to address this condition?

A. An APRM channel Non-critical Fault will result in an INOP trip input to all four 2/4 logic modules (voters). Bypass the APRM per OI-92C and continue operation.

B. An APRM channel Non-critical Fault will result in an INOP trip input to only the respective 2/4 logic module (voter). Bypassing the APRM is not required to continue operation.

C.✔ An APRM channel Critical Fault will result in an INOP trip input to all four 2/4 logic module (voters). Bypass the APRM per OI-92B and continue operation.

D. An APRM channel Critical Fault will result in an INOP trip input to only the respective 2/4 logic module (voter). Bypassing the APRM is not required to continue operation.

K/A Statement:

215005 APRM / LPRM
A2.03 - Ability to (a) predict the impacts of the following on the AVERAGE POWER RANGE MONITOR/LOCAL POWER RANGE MONITOR SYSTEM ; and (b) based on those predictions, use procedures to correct, control, or mitigate the consequences of those abnormal conditions Inoperative trip (all causes).

K/A Justification: This question satisfies the K/A statement by requiring the candidate to use specific plant conditions to correctly determine equipment response and the corrective actions due to an APRM INOP trip.

References: OI-92B Precautions and Limitations 3.0.I

Level of Knowledge Justification: This question is rated as C/A due to the requirement to assemble, sort, and integrate the parts of the question to predict an outcome. This requires mentally using this knowledge and its meaning to predict the correct outcome.

0610 NRC Exam

REFERENCE PROVIDED: None

Plausibility Analysis:

In order to answer this question correctly the candidate must determine the following:

1. The difference between a "Critical Fault" and "Non-critical Fault" with respect to PRNM response.
2. The operation of the 2/4 Logic Module Voter operation for each type of fault.
3. Based on the above, determine the appropriate course of action regarding the APRM cahnnel is question.

A is incorrect. A "Non-critical Fault" will not result in an INOP trip input. This is plausible because a "Non-critical Fault" generates a Trouble Alarm similar to a "Critical Fault". In addition, placing the APRM in BYPASS would be correct IF an INOP trip was geneated.

B is incorrect. A "Non-critical Fault" will not result in an INOP trip input. This is plausible because a "Non-critical Fault" generates a Trouble Alarm similar to a "Critical Fault". In addition, not placing the APRM in BYPASS because of a "Non-critical Fault" is appropriate.

C is correct.

D is incorrect. This is plausible because a "Critical Fault" generates an INOP trip input to the 2/4 Logic Module Voters, but to all four modules, not just two. In addition, not placing the APRM in BYPASS because of a "Critical Fault" is inappropriate since any additional equipment failure could result in an unnecessary scram.

b. Each LPRM instrument provides a brief description of the self-test faults which are divided into two categories, "**Critical**" and "**Non-Critical**" faults. Obj, V,D,4

(1) **Critical** faults are those that affect the instrument's capability to perform its intended function and will cause an instrument INOP trip and a Trouble Alarm indication. V.B.7 V.C.2 The Trouble Alarm is indicated in the Status Header for each instrument.

(2) **Non-critical** faults do not prevent the instrument from performing its intended function and will cause a Trouble Alarm indication only.

c. The LPRM instrument transmits its self-test status to its associated APRM and RBM instruments.

3.0 PRECAUTIONS AND LIMITATIONS (continued)

I. Each of the four APRM/OPRM channels input to the four Voters, such that when a signal is generated from an APRM/OPRM channel, all four Voters see and reflect that signal. Each Voter is directly associated with one RPS sub-channel.

When operating in a 2 out of 4 voting configuration, the first un-bypassed input will be seen as a single input with no trip outputs. When the second un-bypassed signal of the same type [The SAME TYPE inferring that one type is an APRM function and a different type is an OPRM function] is received it will also be seen by all four Voters resulting in a trip output from all four Voters consequently producing a full reactor scram.

J. Bypassing an APRM does not preclude testing a Voter, such that with an APRM in bypass, the Voters can still be tested and produce half scrams. Voters are not bypassed with the APRM joystick.

K. The Recirc Flow Indication and the Voters are never bypassed unless they are removed for testing. There is no bypass capability for the Recirc flow signal input or Voters.

L. A reactor scram will be produced when at least two of the SAME TYPE of trip inputs are received by the Voters:

Either: APRM HIGH/INOP {i.e., APRM High Flux/STP Flow Biased Scram/INOP}
OR: Any OPRM ABA, PBA, or GRBA algorithm trip conditions met.
The SAME TYPE inferring that one type is an APRM function and a different type is an OPRM function.

M. The new APRM modules contain an automatic power oscillation detection and suppression function (Oscillation Power Range Monitoring) which detects and protects against thermal hydraulic instabilities. OPRM monitors local cell area for thermal hydraulic core instabilities. There are 4 channels each containing 33 cells. Each cell contains up to 4 LPRM inputs per OPRM channel for power monitoring.

Oscillations are detected using any one of three algorithms; Period Based Algorithm, Growth Rate Based Algorithm, and, Amplitude Based Algorithm. When power oscillations are detected a trip signal inputs to the Voters which will in turn, send a trip output to the RPS sub-channels and will produce a trip signal. Two of these types of signals will produce a full reactor scram.

Illustration 1
(Page 1 of 6)

APRM/OPRM Trip Outputs and PRNMS Overview

APRM Trip Outputs

TRIP SIGNAL	SETPOINT	ACTION
APRM Downscale	5%	1. Rod Block if REACTOR MODE SWITCH in RUN.
APRM Inop	1. APRM Chassis Mode not in OPERATE (keylock to INOP). 2. Loss of Input Power to APRM. 3. Self Test detected Critical Fault in the APRM instrument. 4. Firmware Watchdog timer has timed out.	1. One Channel detected, no alarm or RPS output signal. 2. Two Channels detected, RPS output signal to all four Voters (Full Reactor Scram).
APRM Inop Condition	1. < 20 LPRMs in OPERATE, or < 3 LPRMs per level.	1. <20 LPRMs total or <3 per level results in a Rod Block and a trouble alarm on the display panel. This does not yield an automatic APRM trip, but does, however, make the associated APRM INOP.
APRM High	1. <u>DLO</u> ≤ (0.66W + 59%) <u>SLO</u> ≤ (0.66 (W-ΔW) + 59%) [W = Total Recirc drive flow in % rated]. 2. Neutron Flux Clamp Rod Block ≤ 113% 3. ≤ 10% APRM Flux.	1. Rod Block if REACTOR MODE SWITCH in RUN. 2. Rod Block if REACTOR MODE SWITCH in RUN. 3. Rod Block in all REACTOR MODE SWITCH positions except RUN.
APRM High High	1. a. <u>DLO</u> ≤ (0.66W + 65%) SLO ≤ (0.66(W-ΔW) + 65%) [W = Total Recirc drive in % rated]. b. ≤ 119% APRM FLUX. 2. ≤ 14% APRM FLUX.	1. Scram 2. Scram in all REACTOR MODE SWITCH positions except RUN.
Recirc Flow Compare Recirc Flow Upscale	1. ≤ 5% mismatch between APRM Channels. 2. 107% Flow Monitor upscale.	1. Flow compare inverse video alarm. 2. Rod Block.

10. RO 217000K2.03 001/C/A/T2G1/RCIC/7/217000K2.03//RO/SRO/

Given the following Unit 2 conditions:

- The Control Room has been evacuated.
- RCIC is controlling Reactor level.
- A loss of Div I ECCS inverter occurs.
- Assuming no further operator action...

Which ONE of the following describes the RCIC turbine speed control response?

A. Lowers to minimum in manual ONLY.

B. Raises to maximum in manual ONLY.

C. ✔ Lowers to minimum in either manual or auto mode.

D. Raises to maximum in either manual or auto mode.

K/A Statement:

217000 RCIC
K2.03 - Knowledge of electrical power supplies to the following: RCIC flow controller

K/A Justification: This question satisfies the K/A statement by requiring the candidate to use specific plant conditions to correctly determine a loss of the logic power supply to the controller has occurred and the RCIC system response to that loss.

References: 2-OI-71 Precautions and Limitations 3.0.W

Level of Knowledge Justification: This question is rated as C/A due to the requirement to assemble, sort, and integrate the parts of the question to predict an outcome. This requires mentally using this knowledge and its meaning to predict the correct outcome.

0610 NRC Exam

REFERENCE PROVIDED: None

Plausibility Analysis:

In order to answer this question correctly the candidate must determine the following:

1. The current power supply to the RCIC controller while being operated from Panel 25-32.
2. The Power Transfer Switch (XS-256-1) is NOT part of the RCIC initiation procedure in 2-AOI-100-2.
3. The failure mode of the Yokogawa Flow Controller used for RCIC while operating from Panel 25-32.

NOTE: Due to the wide spread use and various failure modes of Yokogawa Flow Controllers at BFN, each of the four answers become plausible for a novice operator. These controllers can be set to fail "as-is", "fail high" or "fail low" depending on the system and application.

A is incorrect. The RCIC controller at Panel 25-32 fails low in AUTO or MANUAL.

B is incorrect. The RCIC controller at Panel 25-32 fails low.

C is correct.

D is incorrect. The RCIC controller at Panel 25-32 fails low.

3.0 PRECAUTIONS AND LIMITATIONS (continued)

Q. Suppression pool water temperature should not exceed 95°F without suppression pool cooling in service to restore temperature to less than or equal to 95°F within 24 hours.

R. RCIC Testing is NOT permitted with suppression pool water temperature above 105°F.

S. After RCIC steam lines have been hydrostatically tested, leak tested, or exposed to other conditions which could fill the 2-FCV-71-2 valve bonnet with water, 2-FCV-71-2 should be cycled to prevent overpressurization.

T. [II/F] Prior to initiating any event which adds, or has the potential to add, heat energy to the suppression chamber, the Unit Supervisor will evaluate the necessity of placing suppression pool cooling in service. This is due to the potential of developing thermal stagnation during sustained heat additions. [II-B-91-129]

U. Calculations have shown that 16 min. of RCIC operation without RHR operating in the Suppression Pool Cooling Mode will result in a one deg F rise in bulk suppression pool temperature.

V. [NER/C] Extended RCIC System operation may raise suppression chamber O_2 concentration above TRM 3.6.2 limits because of air-inleakage from RCIC Turbine Gland Seal System. [GE SIL 548]

W. Whenever the 1E ECCS ATU Inverter (Division I) becomes INOP, RCIC Is considered INOP. DCN W17726B changed power supply for RCIC flow controller from 1E Unit Preferred MMG set busses to the Unit 2 1E ECCS ATU Inverter (Division I).

X. The RCIC STEAM LINE OUTBD ISOLATION VLV hand switch, 2-HS-71-3A, must be held in the OPEN position until 2-FCV-71-3 is fully open because the open seal-in circuit has been removed per ECN P0161.

Y. [INPO/C] A buildup of corrosion products in the RCIC TURBINE CONTROL VALVE stem packing could result in speed oscillations, failure to control at the desired speed, and mechanical overspeed of the RCIC Turbine. During operation, RCIC Turbine parameters such as time to reach operating speed, speed stability, and governor response should be monitored to identify possible corrosion product buildup in the RCIC TURBINE CONTROL VALVE. [INPO SER 95004]

Z. (II/C)During routine plant evolutions, notify RADCON prior to making changes in the RCIC System which could cause a rise in area radiation levels. Confirm RADCON has implemented appropriate radiological controls/barriers for the expected RCIC System alignment prior to performing the alignment. (BFPER961778)

RCIC PUMP SUCTION PRESSURE	PI-71-20A	0-50 psig	
RCIC TURBINE STEAM LINE PRESSURE	PI-71-4A	0-1500 psig	
RCIC TURBINE EXHAUST PRESSURE	PI-71-12A	0-50 psig	BFPER971133 Indicator could read from 0-200 rpm in standby readiness due to non-linearity in low RPM range
RCIC TURBINE SPEED	SI-71-42A	0-6000 rpm	
RCIC TURBINE STEAM FLOW	FI-71-1A FI-71-1B	0-80 lbm x1000	

2. Flow Controller (FIC-71-36A & B)

   a. One located on Panel 9-3 and one on Panel 25-32 (Remote Shutdown Panel).

   b. Power Supply to the Pnl 9-3 controller (FIC-71-36A) is the Div I ECCS Inverter — Obj. V.B.7.

   c. Power Supply to the Pnl 25-32 Controller (FIC-71-36B) is also the Div I ECCS Inverter.

   d. AT Pnl 25-32, there is a power transfer switch (XS-256-1) which, if placed in the Alternate position, will transfer both (36A & B) Flow Controller power supplies from the Div I ECCS Inverter to the Unit Preferred 120VAC Power Supply. — TP-13

3. Yokogawa Flow Controller

   a. AUTO - output signal is changed by changing the setpoint. Full Scale travel of setpoint is 40 seconds. Momentary depressing of either the raise or lower keys will cause ~0.7 gpm change (~1%).

4.2 Unit 2 Subsequent Actions (continued)

NOTES

1) Attachment 1 provides normal backup control stations and available communications.
2) Attachment 10 provides PAX extensions and locations.

[7] **ESTABLISH** communication with the following personnel and **DIRECT** attachments be completed as follows:

- U-2 Unit Operator complete Attachment 2, Part A. ☐
- U-2 Rx Bldg AUO complete Attachment 3, Part A. ☐
- U-2 Turb Bldg AUO complete Attachment 4, Part A. ☐

CAUTION

RCIC TURBINE STEAM SUPPLY VALVE, 2-FCV-71-8, transfer switch has been placed in EMERGENCY and will **NOT** trip on Reactor Water Level High (+51 inches). Failure to maintain level below this value may result in equipment damage.

RCIC will still trip on low suction pressure, high turbine exhaust pressure, mechanical overspeed, and trip push button on pnl 25-32.

[8] Upon completion of attachments, **RE-ESTABLISH** communication using the best available means and continue procedure. ☐

* NO REQUIREMENT TO TRANSFER RCIC CONTROLLER POWER SUPPLY.

[9] **INITIATE** RCIC as follows:

[9.1] At Panel 2-25-32, **CHECK OPEN** 2-FCV-71-9 (Red Light above switch) RCIC TURB TRIP/THROT VALVE RESET, 2-HS-71-9D. ☐

[9.2] At 250V DC RMOV Bd 2B, compt. 5D, **PLACE** RCIC PUMP MIN FLOW VALVE EMER HAND SWITCH, 2-HS-071-0034C, in OPEN. (Unit 2 Turbine Building AUO) ☐

[9.3] At 250V DC RMOV Bd 2C, compt. 4B, **PLACE** RCIC TURB STM SUPPLY VALVE EMER HAND SWITCH, 2-HS-071-0008C, in OPEN. (Unit 2 Reactor Building AUO) ☐

4.2 Unit 2 Subsequent Actions (continued)

NOTE

RCIC Turbine should start and flow should stabilize at 600 gpm.

[9.4] At Panel 2-25-32, **CHECK** turbine speed 2100 rpm or above using RCIC TURBINE SPEED, 2-SI-71-42B. ☐

[9.5] At 250V DC RMOV Bd 2B, compt. 5D, **PLACE** RCIC PUMP MIN FLOW VALVE EMER HAND SWITCH, 2-HS-071-0034C, in CLOSE. (Unit 2 Turbine Building AUO) ☐

[9.6] At Panel 2-25-32, **ADJUST** flowrate as necessary using RCIC SYSTEM FLOW/CONTROL, 2-FIC-71-36B. ☐

[9.7] At Panel 2-25-32, **MAINTAIN** Reactor Water Level between +2 and +50 inches using RX WATER LEVEL A & B, 2-LI-3-46A & B. ☐

NOTE

The following step prevents HPCI operation and automatic opening of HPCI MAIN PUMP MINIMUM FLOW VALVE, 2-FCV-73-30.

[10] At 250V Reactor MOV Bd 2A, **PERFORM** the following:

[10.1] Compt. 3D, **VERIFY CLOSED** HPCI STEAM SUPPLY VALVE TO TURB FCV-73-16 (MO 23-14). ☐

[10.2] Compt. 3D, **PLACE** HPCI TURBINE STEAM SUP VLV TRANS, 2-XS-73-16, in EMERG. ☐

[10.3] **IF** desired to verify HPCI MIN FLOW BYPASS TO SUPPRESSION CHAMBER VALVE, 2-FCV-73-30, closed prior to opening breaker, **THEN**

DIRECT operator to verify locally. ☐

[10.4] Compt. 8D, **PLACE** HPCI MAIN PUMP MIN FLOW VLV FCV-73-30, breaker in OFF. ☐

11. RO 218000K1.05 001/MEM/T2G1/100-2/5/218000K1.05//RO/SRO/

Given the following plant conditions:

- The Unit 1/2 control room has been abandoned.
- All MSRV transfer switches at panel 25-32 have been placed in EMERGENCY.
- All MSRV control switches at panel 25-32 have been checked in CLOSE.

Which ONE of the following describes the operation of the MSRVs?

A. The associated ADS valves will open upon receipt of an ADS initiation signal.

B.✔ The associated ADS valves will open if their respective pressure relief setpoints are exceeded.

C. The associated ADS valves will open if their respective control switches on Panel 9-3 are placed in OPEN.

D. Any associated ADS valve will open ONLY when its control switch is placed n OPEN.

K/A Statement:

218000 ADS
K1.05 - Knowledge of the physical connections and/or cause- effect relationships between AUTOMATIC DEPRESSURIZATION SYSTEM and the following: Remote shutdown system: Plant-Specific

K/A Justification: This question satisfies the K/A statement by requiring the candidate to use specific plant conditions to correctly determine their effect on MSRV operation during a Remote Shutdown condition.

References: OPL171.208 Rev. 5 page 8 and 2-AOI-100-2 page 8

Level of Knowledge Justification: This question is rated as MEM due to the requirement to recall or recognize discrete bits of information.

0610 NRC Exam

REFERENCE PROVIDED: None

Plausibility Analysis:

In order to answer this question correctly the candidate must determine the following:

1. Transferring the MSRV control to Panel 25-32 disables the ADS function.
2. Transferring the MSRV control to Panel 25-32 disables the Panel 9-3 control switch.
3. Transferring the MSRV control to Panel 25-32 does NOT disable the Pressure Relief function.

A is incorrect. Transferring the MSRV control to Panel 25-32 disables the ADS function.

B is correct.

C is incorrect. Transferring the MSRV control to Panel 25-32 disables the Panel 9-3 control switch.

D is incorrect. Transferring the MSRV control to Panel 25-32 does NOT disable the Pressure Relief function.

4.2 Unit 2 Subsequent Actions

[1] **IF** ALL control rods were **NOT** fully inserted **AND** RPS failed to deenergize, **THEN** (Otherwise N/A)

DIRECT an operator to Unit 2 Auxiliary Instrument Room to perform Attachment 11. ☐

NOTES

1) The following transfers Reactor Pressure Control to Panel 2-25-32 to allow for pressure control while completing the Panel Checklist.
2) Attachment 9, Alarm Response Procedure Panel 2-25-32, provides for any alarms associated with this instruction.

CAUTION

Failure to place control switch in desired position prior to transferring to emergency position may result in inadvertent actuation of the component.

[NER/C] Operation from Panel 2-25-32 bypasses logic and interlocks normally associated with the components. [GE SIL 326,S1]

[2] At Panel 2-25-32, **PLACE** the following MSRV control switches in CLOSE/AUTO:

Switch No.	Description	
2-HS-1-22C	MAIN STM LINE B RELIEF VALVE	☐
2-HS-1-5C	MAIN STM LINE A RELIEF VALVE	☐
2-HS-1-30C	MAIN STM LINE C RELIEF VALVE	☐
2-HS-1-34C	MAIN STM LINE C RELIEF VALVE	☐

INSTRUCTOR NOTES

9. Trip reactor feed pumps as necessary to prevent tripping on high water level. — Obj. V.B.8 Obj. V.C.5

10. Start the diesel generators. (9-8 Switch starts respective units D/G only)

11. Verify each EECW header has one pump in service.

12. Announce to all plant personnel that the Control Room is being evacuated and all operators are to report to their assigned backup control stations.

13. Obtain hand held radios from the control room.

14. Proceed to the Backup Control Panel (25-32)

F. Subsequent Actions — See AOI-100-2 for details for actions HU Tools: Procedure Use

1. If rods failed to fully insert and RPS did not deenergize, an operator is directed to pull RPS fuses. However, this is beyond the actual design bases. — Obj V.C.2 See AOI-100-2 Attachment 11

2. Transfer reactor pressure control to Panel 25-32 to allow for pressure control while the rest of the panel checklist is being completed. — Note: System Status prior to abandonment maintained by GOI-300-1 checklists.

3. Before any transfer switch is placed in EMERGENCY, its associated control switch must be verified to be in the proper position. Placing a transfer switch in the EMERGENCY position enables the local control switch, and the device will assume the condition called for by the local control switch. For example, if a transfer switch for an ADS valve is placed in EMERGENCY with the local control switch in OPEN, the ADS valve will open. — Obj. V.B.2 Obj. V.B.3.

   a. Place the transfer switches for the ADS valves, and the disconnect switches for the non-ADS valves in EMERGENCY after making sure the control switches are in the AUTO position. This action disables the Control Room hand switches and the ADS function and is performed to prevent spurious blowdown of the primary system. The other 3 SRVs are disabled by opening their breakers on 250VDC RMOV board 2B(3B). — TP-1 Obj. V.B.7

   Four ADS valves can be controlled from Panel 25-32. Six SRVs (Non-ADS) have only disconnect switches at Panel 25-32. — Obj. V.B.8 Obj. V.B.7

12. RO 218000G2.1.24 001/MEM/T2G1///218000G2.1.24//BOTH/12/17/2007 RMS

Given the following plant conditions:

- Unit-2 is at rated power.
- A loss of 2B 250 Volt RMOV Board has occurred.

Which ONE of the following describes the affect on the Unit 2 ADS valves and ADS logic? (Do not consider the mechanical relief function)

A. Both Div I & II ADS logic inoperable
No ADS valves will operate automatically
4 ADS valves can still be operated manually.

B. Div I ADS logic inoperable; Div II ADS logic operable
All ADS valves will still actuate automatically.
All ADS valves can still be operated manually.

C. Div I ADS logic operable, Div II ADS logic inoperable
ADS logic is only capable of opening 3 ADS valves automatically
4 ADS valves can still be operated manually.

D. Both Div I & II ADS logic is still operable
All ADS valves will operate automatically
All ADS valves can be manually operated.

K/A Statement:

218000 ADS
2.1.24 - Conduct of Operations Ability to obtain and interpret station electrical and mechanical drawings

K/A Justification: This question satisfies the K/A statement by requiring the candidate to recall and interpret the electrical logic drawing of the ADS system to determine the effect of a loss of power to that logic.

References: OPL171.043

Level of Knowledge Justification: This question is rated as MEM due to the requirement to recall or recognize discrete bits of information.

0610 NRC Exam

REFERENCE PROVIDED: None

Plausibility Analysis:

In order to answer this question correctly the candidate must determine the following:

1. 2B 250V RMOV Board supplies Div 1, 2A 250V RMOV Board supplies Div II. This is the opposite of conventional logic.
2. 2A 250V RMOV Board supplies only relay power and only in Div II.
3. 2B 250V RMOV Board supplies BOTH Div I and Div II logic.
4. Four ADS valves have an alternate power supply that is NOT 2B 250V RMOV Board.
5. Two ADS valves have no alternate power supply and ONLY powered from 2B 250V RMOV Board.

NOTE: Answers A & B are plausible since conventional logic on other ECCS systems is "cross-connected" to ensure initiation capability is maintained by either division being energized. Answer D is plausible if the novice operator uses conventional Division assignments. (A to Div 1 and B to Div II)

A is correct.

B is incorrect. Div II ADS logic is inoperable. No ADS logic is available and only four ADS valves have power.

C is incorrect. Div I ADS logic is inoperable. No ADS logic is available.

D is incorrect. Div I and Div II logic are inoperable. No ADS logic is available and only four ADS valves have power.

(i) When pressure has lowered to the valve reseat pressure (50 psig below setpoint), the pressure-sensing stabilizer disc will be unseated by the pilot disc via the setpoint adjust spring. This, in turn, causes main piston chamber repressurization, which results in closing of the main stage.

2) Pilot actuation

(a) DC solenoid admits air pressure to remote air actuator.

(b) This unseats the pilot valve disc which depressurizes the upper main piston chamber.

(c) This creates a ΔP across the main valve piston which causes it to move, against spring tension, opening the valve.

(d) The solenoid is actuated by:

i. Manual demand

(hand switch)

ii. Automatic blowdown demand (ADS) for 6 valves which are controlled by ADS.

iii. RPV high pressure

(e) The operating air is supplied from the drywell control air system.

(f) The SRV solenoids are powered from 250 VDC RMOV Boards or Battery Boards. Some SRV power supplies have relays in the bottom of panel 25-32 that allow them to swap to an alternate supply when the normal supply is lost.

(i) On Unit 1 , SRV's 1-5, 1-22,1-30, and 1-34 have auto transfer capabilities (for power supplies)

(ii) On Unit 2, SRV's 1-5, 1-22, 1-30, and 1-34 have auto transfer capabilities (for power supplies).

(iii) On Unit 3, SRV's 1-5, 1-22, 1-34, and 1-41 have auto transfer capabilities (for power supplies).

(g) Loss of air or power to an SRV would inhibit the relief function but not the safety function. Per TS 3.4.3 MSRV operability is based on the safety function (spring action) and not the 'relief' function

2. Vacuum breaker

a. Two check valves are provided in each SRV discharge line to prevent drawing water up into the line due to steam condensation following termination of valve operation

b. Without the vacuum breakers, water in the discharge lines above suppression pool water level could cause excessive hydraulic stresses to the T-quenchers and other torus structural components

3. Accumulator and check valve arrangement — TP-1

a. Only ADS valves are provided with the accumulator arrangement

b. Accumulators are provided to assure that the ADS valves can be held open for 30 minutes following a failure of the air supply to the accumulators — Obj. V.B.2, Obj. V.C.1, Obj. V.D.1, Obj. V.E.2

c. Accumulators are sized to contain sufficient air for that minimum of five valve operations following a loss of Drywell Control Air — A CAD supplies 3 valves; B CAD supplies 3 valves

d. 2/3-EOI Appendix 8G crossties CAD to DWCA — PROCEDURE USE

INSTRUCTOR NOTES

4) EOIs will direct the operator when this action is appropriate. Both keylocks must be placed in inhibit to prevent ADS blowdown — FLAGGING

5) ADS Logic can be inhibited by removing fuses in Panel 9-30 in Auxiliary Instrument Room.

6) The fuses for "A" logic are on terminal block "BB 104 & 105" (FU2-1-2EK3)

7) The "B" logic fuses are on terminal "AA94 & 95" (FU2-1-2EK13)

8) The time delay setting is chosen to be long enough so that HPCI has time to start and yet not so long that Core Spray and LPCI are unable to adequately cool the fuel if HPCI should fail to start — 3-WAY COMMUNICATIONS

e. The 100 psig and 185 psig ECCS interlocks are provided to ensure that there is a vessel level inventory medium available prior to initiating blowdown of steam from the vessel — Obj. V.B.4, Obj. V.C.3, Obj. V.C.4, Obj. V.D.3, Obj. V.E.4

6. ADS Trip Systems — Obj. V.B.4, Obj. V.C.5, Obj. V.D.5, Obj. V.E.4

a. Redundant trip systems from the same power supply

b. A/C interlock ensures ADS functions when needed

c. There are two channels in each trip system

1) A and C in System I

2) B and D in System II

d. Both channels of a trip system are required to function to initiate ADS from a given trip system

e. This two-channel interlock is called the A-C interlock and is provided to ensure that all signals to initiate ADS response are confirmed, thus preventing an ADS response from an erroneous or failed signal — Obj. V.B.5, Obj. V.C.5, Obj. V.D.5, Obj. V.E.5

INSTRUCTOR NOTES

f. The power supply for the LOGIC and the solenoid valves is 250VDC

g. 250V RMOV Bd B supplies LOGIC Power for both system I & II

h. A Loss of 250V RMOV Bd B would prevent actuation

All ADS valves with alternate power supplies can be manually operated from backup control panel (25-32)

i. 250V RMOV Bd A supplies Power for relays in system II of ADS Logic

j. A Loss of 250V RMOV Bd A would prevent system II actuation

k. PCV 1-22 is powered from 250V RMOV Board 2A with alternate supply from 250V RMOV Board 2B

See section F. Unit Differences for U-3 Power Supplies

l. PCVs 1-19, 1-31 are powered from 250V RMOV Board 2B. There is no alternate power to these valves

m. PCVs 1-5 and 1-34 are normally powered from 250V RMOV Board 2C with alternate power supply from Battery Board 1 panel

n. PCV 1-30 is normally powered from 250V RMOV Board 2A with a first alternate to 250V RMOV Board 2C and a second alternate to Battery Board 1 panel 7

o. Valves powered from 250V RMOV Bd 2C required alternate sources due to RMOV Board 2C not being environmentally qualified for a line break in secondary containment

p. The transfer occurs automatically when undervoltage relays (mounted on panel 2-25-32) sense a loss of power to 250V RMOV Bd B

DCN 51106

B. Instrumentation

1. SRV discharge piping temperatures are measured by a multipoint recorder in the Control Room located on Panel 9-47 (range 0-600°F)

13. RO 223002A2.06 001/C/A/T2G1/PCIS//223002A3.01//RO/SRO/

Given the following plant conditions:

- During performance of 2-SR-3.3.1.1.13(4A), Reactor Protection and Primary Containment Isolation Systems Low Reactor Water Level Instrument Channel A1 Calibration, 2-LIS-3-203A fails to actuate.
- It is determined that the failure is due to an inoperable switch and a replacement is not available for 4 days.
- The Shift Manager has determined that the proper action is to trip the inoperable channel, only.

Which ONE of the following describes how this is accomplished and the effect on Unit status?

A.✔ Remove fuse 2-FU1-3-203AA associated with 2-LIS-3-203A, a half scram will result and no PCIVs will realign.

B. Remove fuse 2-FU1-3-203AA associated with 2-LIS-3-203A, a half scram will result and PCIS Groups 2, 3 and 6 inboard isolation valves will close.

C. Place a trip into the ATU associated with 2-LIS-3-203A, no half scram will result and no PCIVs will realign.

D. Place a trip into the ATU associated with 2-LIS-3-203A, a half scram will result and PCIS Groups 2, 3 and 6 outboard isolation valves will close.

K/A Statement:

223002 PCIS/Nuclear Steam Supply Shutoff
A2.06 - Ability to (a) predict the impacts of the following on the PRIMARY CONTAINMENT ISOLATION SYSTEM/NUCLEAR STEAM SUPPLY SHUT-OFF ; and (b) based on those predictions, use procedures to correct, control, or mitigate the consequences of those abn cond or ops. Containment instrumentation failures

K/A Justification: This question satisfies the K/A statement by requiring the candidate to use specific plant conditions to determine the effect of an instrumentation failure and the corrective actions required as a result of that failure.

References: 2-OI-99 Illustration 3 (page 6 of 11)

Level of Knowledge Justification: This question is rated as C/A due to the requirement to assemble, sort, and integrate the parts of the question to predict an outcome. This requires mentally using this knowledge and its meaning to predict the correct outcome.

0610 NRC Exam

REFERENCE PROVIDED: None

Plausibility Analysis:

In order to answer this question correctly the candidate must determine the following:

1. Recognize the appropriate action is to ensure trip input by de-energizing the level switches.
2. Recognize the effect on RPS logic based on the trip input.
3. Recognize the effect on PCIS logic based on the trip input.

A is correct.

B is incorrect. PCIS logic cuases a "1/4-isolation" signal BUT no PCIV devices actuate. This is plausible because the action to ensure the trip input is correct. In addition, the "1/4-isolation" applies to the PCIS groups identified in the distractor.

C is incorrect. The method of inputting the trip is incorrect. Tripping an ATU cannot be ensured via a clearance. This is plausible because the RPS and PCIS response is correct.

D is incorrect. The method of inputting the trip is incorrect. Tripping an ATU cannot be ensured via a clearance. This is plausible because the "1/4-isolation" applies to the PCIS groups identified in the distractor. This distractor is also similar to answer "A" except it is applied to outboard PCIVs.

Illustration 3
(Page 6 of 11)

Actions to Place RPS Instruments in Tripped Conditions (TS Table 3.3.1.1-1)

DEVICE	FUSE	RELAY	PANEL	PRINT	ALARMS	REMARKS
2-LIS-3-203A RX WATER LEVEL LOW (Level 3) A1 CHANNEL Function: 4	2-FU1-3-203AA (5AF6A)	2-RLY-099-05AK06A 2-RLY-099-5A-K25A 2-RLY-064-16AK5A 2-RLY-064-16AK6A	9-15	2-730E915-9 2-730E927-7 2-45E671-26	2-XA-55-4A-2 RX VESSEL WTR LEVEL LOW HALF SCRAM 2-XA-55-5B-1 REACTOR CHANNEL A AUTO SCRAM	ALARMS AND 1/2 SCRAM IN CHANNEL A NO PCIS DEVICES ACTUATE. 1 channel actuated for secondary containment and CREV initiation
2-LIS-3-203B RX WATER LEVEL LOW (Level 3) B1 CHANNEL Function: 4	2-FU1-3-203BA (5AF6B)	2-RLY-099-05AK06B 2-RLY-099-5A-K25B 2-RLY-064-16AK5B 2-RLY-064-16AK6B	9-17	2-730E915-10 2-730E927-8 2-45E671-38	2-XA-55-4A-2 RX VESSEL WTR LEVEL LOW HALF SCRAM 2-XA-55-5B2 REACTOR CHANNEL B AUTO SCRAM	ALARMS AND 1/2 SCRAM IN CHANNEL B NO PCIS DEVICES ACTUATE. 1 channel actuated for secondary containment and CREV initiation
2-LIS-3-203C RX WATER LEVEL LOW (Level 3) A2 CHANNEL Function: 4	2-FU1-3-203CA (5AF6C)	2-RLY-099-05AK06C 2-RLY-099-5A-K25C 2-RLY-064-16AK5C 2-RLY-064-16AK6C	9-15	2-730E915-9 2-730E927-7 2-45E671-32	2-XA-55-4A-2 RX VESSEL WTR LEVEL LOW HALF SCRAM 2-XA-55-5B-1 REACTOR CHANNEL A AUTO SCRAM	ALARMS AND 1/2 SCRAM IN CHANNEL A NO PCIS DEVICES ACTUATE. 1 channel actuated for secondary containment and CREV initiation
2-LIS-3-203D RX WATER LEVEL LOW (Level 3) B2 CHANNEL Function: 4	2-FU1-3-203DA (5AF6D)	2-RLY-099-05AK06D 2-RLY-099-5A-K25D 2-RLY-064-16AK5D 2-RLY-064-16AK6D	9-17	2-730E915-10 2-730E927-8 2-45E671-44	2-XA-55-4A-2 RX VESSEL WTR LEVEL LOW HALF SCRAM 2-XA-55-5B2 REACTOR CHANNEL B AUTO SCRAM	ALARMS AND 1/2 SCRAM IN CHANNEL B NO PCIS DEVICES ACTUATE. 1 channel actuated for secondary containment and CREV initiation

NOTE:

Device Function corresponds to the TS Table 3.3.1.1 Functions.

Illustration 2
(Page 1 of 10)

Actions to Place PCIS in Tripped Condition

NOTE

Water level designators (1-8)are listed for relationship to the applicable device only.

(T.S. Tables 3.3.6.1-1,3.3.6.2-1, & 3.3.7.1-1)

DEVICE	FUSE	RELAY	PANEL	PRINT	ALARM	REMARKS
2-LIS-3-203A RX WATER LEVEL LOW (Level 3)	2-FU1-3-203AA (5A-F6A)	5AK6A 5AK25A 16AK5A 16A6A	9-15	2-730E915-9 2-730E927-7 2-45E671-26	2-XA-55-4A-2 RX VESSEL WTR LEVEL LOW HALF SCRAM 2-XA-55-5B-1 REACTOR CHANNEL A AUTO SCRAM	ALARMS AND 1/2 SCRAM IN CHANNEL A. CAUSES 1/4 ISOLATION IN PCIS GROUPS 2,3, 6 AND 8. NO PCIS DEVICES ACTUATE.
2-LIS-3-203B RX WATER LEVEL LOW (Level 3)	2-FU1-3-203BA (5A-F6B)	5AK6B 5AK25B 16AK5B 16AK6B	9-17	2-730E915-10 2-730E927-8 2-45E671-38	2-XA-55-4A-2 RX VESSEL WTR LEVEL LOW HALF SCRAM 2-XA-55-5B-2 REACTOR CHANNEL B AUTO SCRAM	ALARMS AND 1/2 SCRAM IN CHANNEL B. CAUSES 1/4 ISOLATION IN PCIS GROUPS 2,3, 6 AND 8. NO PCIS DEVICES ACTUATE.
2-LIS-3-203C RX WATER LEVEL LOW (Level 3)	2-FU1-3-203CA (5A F6C)	5AK6C 5AK25C 16AK5C 16AK6C	9-15	2-730E915-9 2-730E927-7 2-45E671-32	2-XA-55-4A-2 RX VESSEL WTR LEVEL LOW HALF SCRAM 2-XA-55-5B-1 REACTOR CHANNEL A AUTO SCRAM	ALARMS AND 1/2 SCRAM IN CHANNEL A. CAUSES 1/4 ISOLATION IN PCIS GROUPS 2,3, 6 AND 8. NO PCIS DEVICES ACTUATE.
2-LIS-3-203D RX WATER LEVEL LOW (Level 3)	2-FU1-3-203DA (5A-F6D)	5AK6D 5AK25D 16AK5D 16AK6D	9-17	2-730E915-10 2-730E927-8 2-45E671-44	2-XA-55-4A-2 RX VESSEL WTR LEVEL LOW HALF SCRAM 2-XA-55-5B-2 REACTOR CHANNEL B AUTO SCRAM	ALARMS AND 1/2 SCRAM IN CHANNEL B. CAUSES 1/4 ISOLATION IN PCIS GROUPS 2,3, 6 AND 8. NO PCIS DEVICES ACTUATE.

Table 3.3.6.1-1: Function 2a and 5h
Table 3.3.6.2-1: Function 1
Table 3.3.7.1-1: Function 1

14. RO 223002A3.01 001/C/A/T2G1/ADS/B5/223002A2.06//RO/SRO/

Given the following plant conditions:

- Unit 3 is in Mode 1 with 4 Bypass valves open.
- 3-SI-3.4.3.2 "Main Steam Relief Valve Manual Cycle Test" is in progress.
- The unit operator performing the test notices that the 3-FCV-1-5, which was just cycled 1 minute eariler, has lost it's indication lights.
- The outside US is dispatched and reports that the troubleshooting indicates that a ground in the normal feeder breaker from 250V RMOV Bd 3C to the 3-FCV-1-5 SRV is causing the breaker to trip, all other circuits associated with the SRV are functional and normal.

Regarding the 3-FCV-1-5, which ONE of the following statements describes the result of a loss of it's normal power source?

A. 3-FCV-1-5 cannot be controlled from 25-32 and will automatically transfer to an alternate power source but will NOT retain it's operability for SRV safety relief mode (non ADS).

B.✔ 3-FCV-1-5 can be controlled from panel 25-32 and auto transfers to an alternate power source and WILL retain it's operability for SRV safety relief mode (non ADS).

C. 3-FCV-1-5 can be controlled from panel 25-32 and can be manually transferred to an alternate power source but will NOT retain it's operability for SRV safety relief mode (non ADS).

D. 3-FCV-1-5 cannot be controlled from 25-32 but it can be manually transfered to an alternate power source and WILL retain it's operabity for SRV safety relief mode (non ADS).

K/A Statement:

223002 PCIS/Nuclear Steam Supply Shutoff
A3.01 - Ability to monitor automatic operations of the PRIMARY CONTAINMENT ISOLATION SYSTEM/NUCLEAR STEAM SUPPLY SHUT-OFF including: System indicating lights and alarms.

K/A Justification: This question satisfies the K/A statement by requiring the candidate to use specific plant conditions to correctly determine the effect a loss of indication has on MSRV operability.

References: 3-AOI-100-2, OPL171.043

Level of Knowledge Justification: This question is rated as C/A due to the requirement to assemble, sort, and integrate the parts of the question to predict an outcome. This requires mentally using this knowledge and its meaning to predict the correct outcome.

0610 NRC Exam

REFERENCE PROVIDED: None

Plausibility Analysis:

In order to answer this question correctly the candidate must determine the following:

1. Whether MSRV 1-5 can be controlled from Panel 25-32 on Unit-3.
2. Whether MSRV 1-5 has an alternate power supply available.
3. Whether MSRV 1-5 will AUTO transfer to Alternate or must be manually transferred.
4. Recognize that electrical power is sufficient for Safety Relief Mode OPERABILITY.

A is incorrect. 3-FCV-1-5 can be controlled from 25-32. In addition, the valve will retain it's operability for Safety Relief Mode. This is plausible because the valve automatically transfers to Alternate.

B is correct.

C is incorrect. 3-FCV-1-5 automatically transfers to alternate upon a loss of normal power. In addition, the valve will retain it's operability for Safety Relief Mode. This is plausible because the valve CAN be controlled from 25-32.

D is incorrect. 3-FCV-1-5 can be controlled from 25-32. In addition, the valve automatically transfers to alternate upon a loss of normal power. This is plausible because the valve will retain it's operability for Safety Relief Mode.

INSTRUCTOR NOTES

f. The power supply for the LOGIC and the solenoid valves is 250VDC

g. 250V RMOV Bd B supplies LOGIC Power for both system I & II

h. A Loss of 250V RMOV Bd B would prevent actuation

All ADS valves with alternate power supplies can be manually operated from backup control panel (25-32)

i. 250V RMOV Bd A supplies Power for relays in system II of ADS Logic

j. A Loss of 250V RMOV Bd A would prevent system II actuation

k. PCV 1-22 is powered from 250V RMOV Board 2A with alternate supply from 250V RMOV Board 2B

See section F. Unit Differences for U-3 Power Supplies

l. PCVs 1-19, 1-31 are powered from 250V RMOV Board 2B. There is no alternate power to these valves

m. PCVs 1-5 and 1-34 are normally powered from 250V RMOV Board 2C with alternate power supply from Battery Board 1 panel

n. PCV 1-30 is normally powered from 250V RMOV Board 2A with a first alternate to 250V RMOV Board 2C and a second alternate to Battery Board 1 panel 7

o. Valves powered from 250V RMOV Bd 2C required alternate sources due to RMOV Board 2C not being environmentally qualified for a line break in secondary containment

p. The transfer occurs automatically when undervoltage relays (mounted on panel 2-25-32) sense a loss of power to 250V RMOV Bd 2

DCN 51106

B. Instrumentation

1. SRV discharge piping temperatures are measured by a multipoint recorder in the Control Room located on Panel 9-47 (range 0-600°F)

Date _____

4.2 Unit 3 Subsequent Actions

[1] **IF** ALL control rods were **NOT** fully inserted **AND** RPS failed to deenergize, **THEN** (Otherwise N/A)

DIRECT an operator to Unit 3 Auxiliary Instrument Room to perform Attachment 9. ☐

CAUTIONS

1) Failure to place control switch in desired position prior to transferring to emergency position may result in inadvertent actuation of the component.
2) [NER/C] Operation from Panel 3-25-32 bypasses logic and interlocks normally associated with the components. [GE SIL 326, S1]

NOTES

1) The following transfers Reactor Pressure Control to Panel 3-25-32 to allow for pressure control while completing the Panel Checklist.
2) Attachment 7, Alarm Response Procedure Panel 3-25-32, provides for any alarms associated with this instruction.

[2] **PLACE** the following MSRV control switches in CLOSE/AUTO at Panel 3-25-32 : ☐

Switch No.	Description	(√)
3-HS-1-22C	MAIN STM LINE B RELIEF VALVE	☐
3-HS-1-5C	MAIN STM LINE A RELIEF VALVE	☐
3-HS-1-41C	MAIN STM LINE D RELIEF VALVE	☐
3-HS-1-34C	MAIN STM LINE C RELIEF VALVE	☐

Date _____

4.2 Unit 3 Subsequent Actions (continued)

[3] **PLACE** the following MSRV disconnect switches in DISCT at Panel 3-25-32: ☐

Switch No.	Description	(√)
3-XS-1-4	MAIN STM LINE A RELIEF VALVE DISCT	☐
3-XS-1-42	MAIN STM LINE D RELIEF VALVE DISCT	☐
3-XS-1-23	MAIN STM LINE B RELIEF VALVE DISCT	☐
3-XS-1-30	MAIN STM LINE C RELIEF VALVE DISCT	☐
3-XS-1-180	MAIN STM LINE D RELIEF VALVE DISCT	☐

[4] **PLACE** the following MSRV transfer switches in EMERG at Panel 3-25-32: ☐

Switch No.	Description	(√)
3-XS-1-22	MAIN STM LINE B RELIEF VALVE XFR	☐
3-XS-1-5	MAIN STM LINE A RELIEF VALVE XFR	☐
3-XS-1-41	MAIN STM LINE D RELIEF VALVE XFR	☐
3-XS-1-34	MAIN STM LINE C RELIEF VALVE XFR	☐

NOTE

Use of the following sequence when opening MSRVs should distribute heat evenly in the Suppression Pool.

[5] **MAINTAIN** Reactor Pressure between 800 and 1000 psig using the following sequence at Panel 3-25-32: ☐

A. 3-HS-1-22C, MAIN STM LINE B RELIEF VALVE ☐

B. 3-HS-1-5C, MAIN STM LINE A RELIEF VALVE ☐

C. 3-HS-1-41C, MAIN STM LINE D RELIEF VALVE ☐

D. 3-HS-1-34C, MAIN STM LINE C RELIEF VALVE ☐

15. RO 239002A3.03 001/C/A/T2G1/MAIN STEAM/C/A/239002A3.03//RO/SRO/

Given the following plant conditions:

- The reactor is operating at 100% power and 1000 psig.
- A turbine control valve malfunction resulted in reactor safety relief valve (SRV) 1-4 lifting and failing to reseat.

Which ONE of the following describes the expected SRV tailpipe temperature?

REFERENCE PROVIDED

A. 212°F

B.✔ 290°F

C. 345°F

D. 545°F

K/A Statement:

239002 SRVs
A3.03 - Ability to monitor automatic operations of the RELIEF/SAFETY VALVES including: Tail pipe temperatures

K/A Justification: This question satisfies the K/A statement by requiring the candidate to use specific plant conditions to determine the expected tailpipe temperature of an open MSRV using steam tables.

References: Steam Tables

Level of Knowledge Justification: This question is rated as C/A due to the requirement to assemble, sort, and integrate the parts of the question to predict an outcome. This requires mentally using this knowledge and its meaning to predict the correct outcome.

0610 NRC Exam

REFERENCE PROVIDED: Steam Tables

Plausibility Analysis:

In order to answer this question correctly the candidate must:

1. Use the Steam Table Mollier Diagram to determine the correct process and temperature for an open MSRV.

NOTE: This question is typical for a GFES examination, however the K/A provides little lattitude for a question with discriminatory value based on reading a multi-point recorder. In addition, with it's direct connection to an issue identified following the accident at TMI, the importance of understanding this process becomes self-evident.

A is incorrect. This temperature is indicative of saturation temperature for steam at tailpipe pressure (atmospheric).

B is correct. This is a throttling process and is therefore isoenthalpic.

C is incorrect. 340^0F would be incorrectly determined if the candidate considered the process to be isoenthalpic to the saturation line, then followed the constant superheat line to atmospheric pressure.

D is incorrect. This temperature is indicative of saturation temperature for reactor pressure.

EXAMINATION REFERENCE PROVIDED TO CANDIDATE

Combustion Engineering Steam Tables

16. RO 239002A4.08 001/C/A/T2G1/32A-1/4/239002A4.08//RO/SRO/

Given the following plant conditions:

- Unit 2 is operating at 100% power.
- A complete loss of Drywell Control Air occurs (both headers).
- NEITHER crosstie with CAD nor plant Control Air can restore system pressure.

Which ONE of the following statements describes the effect on pneumatically operated valves inside the Primary Containment in accordance with 2-AOI-32A-1, Loss of Drywell Control Air?

A. All inboard MSIVs can still be cycled once.

B. All MSRV's can still be cycled five times.

C. All inboard MSIVs can still be cycled with the test switch.

D.✔ ADS MSRVs can still be cycled five times.

K/A Statement:

239002 SRVs
A4.08 - Ability to manually operate and/or monitor in the control room: Plant air system pressure: Plant-Specific

K/A Justification: This question satisfies the K/A statement by requiring the candidate to use specific plant conditions to determine the operability of MSRVs following a loss of pneumatic supply.

References: 2-AOI-32A-1

Level of Knowledge Justification: This question is rated as C/A due to the requirement to assemble, sort, and integrate the parts of the question to predict an outcome. This requires mentally using this knowledge and its meaning to predict the correct outcome.

0610 NRC Exam

REFERENCE PROVIDED: None

Plausibility Analysis:

In order to answer this question correctly the candidate must determine the following:

1. Recognize that ADS MSRV accumulators allow for five cycle operations.
2. Recognize that Inboard MSIVs are capable of being CLOSED one time, but not CYCLED one time.
3. Recognize that using the TEST switch to close an MSIV has no impact on the AMOUNT of pneumatic pressure required.

A is incorrect. MSIVs can be CLOSED once, but not CYCLED. This is plausible because the accumulator does not fully discharge with one closure, but there is insufficient pressure remaining to overcome the spring pressure to open the MSIV.

B is incorrect. Only ADS MSRVs have accumulators sufficient to cycle five times. The remaining MSRVs will not function without a pneumatic supply.

C is incorrect. MSIVs can be CLOSED once, but not CYCLED. Using the TEST switch to close an MSIV has no impact on the AMOUNT of pneumatic pressure required.

D is correct.

4.0 OPERATOR ACTIONS

4.1 Immediate Actions

None

4.2 Subsequent Actions

[1] **IF** ANY EOI entry condition is met, **THEN**

ENTER the appropriate EOI(s). ☐

NOTES

1) The MSIV air accumulators are designed to provide for one closing actuation following loss of air supply. Once closed the valve is held closed by the springs.
2) The ADS MSRV air accumulators are provided to assure that the valves can be held open following failure of the air supply to the accumulators, and they are sized to contain sufficient air for a minimum of five valve operations. Operations of the ADS MSRV should be limited to 5 times.
3) Nitrogen Tanks supply pressurized nitrogen to the Drywell Control Air System via the DWCA SUPPLY REGULATORS 2-PREG-32-49A and 2-PREG-32-49A (lead regulator will be set at 100 psig and backup regulator set at 5-8 psig lower)
4) DWCA NITROGEN REG STATION BYPASS VLV, 2-BYV-032-0141 can be used to maintain approximately 98 psig in DWCA Receiver Tanks A & B when required by plant conditions

[2] **CHECK** Drywell Control Air System operating properly.

REFER TO 2-OI-32A. ☐

[3] **IF** Operation with DWCA Nitrogen Regulattion Bypass Valve Open/Throttled is required, **THEN**

REFER TO 2-OI-32A. ☐

17. RO 259002A4.03 001/C/A/T2G1/OI-3//259002A4.03//RO/SRO/11/28/07 RMS

In accordance with 1-GOI-100-1A, Unit Startup, the RFPT is not placed in AUTOMATIC control until _____ to prevent_____.

A. power is above 15%, RPV level oscillations due to low steam flow vs. feed flow error signals.

B. the Mode switch is in RUN, an uncontrolled reactivity insertion.

C✓ power is above 15%, an uncontrolled reactivity insertion.

D. the Mode switch is in RUN, RPV level oscillations due to low steam flow vs. feed flow error signals.

K/A Statement:

259002 Reactor Water Level Control
A4.03 - Ability to manually operate and/or monitor in the control room: All individual component controllers when transferring from manual to automatic modes

K/A Justification: This question satisfies the K/A statement by requiring the candidate to use specific plant conditions to determine the condition and basis for transferring reactor water level control to automatic operation.

References: 1-GOI-100-1A

Level of Knowledge Justification: This question is rated as C/A due to the requirement to assemble, sort, and integrate the parts of the question to predict an outcome. This requires mentally using this knowledge and its meaning to predict the correct outcome.

0610 NRC Exam

REFERENCE PROVIDED: None

Plausibility Analysis:

In order to answer this question correctly the candidate must determine the following:

1. Recognize the power level or plant condition when it is appropriate to place RFPs in AUTOMATIC.
2. The basis for establishing the required condition is a reactivity control issue.

A is incorrect. This is plausible because the procedural limit is correct. In addition, maintaining steady RPV level at low steam flows has been an issue prior to more advanced electronic control systems becoming available.

B is incorrect. The procedural limit is incorrect. This is plausible because the basis is correct. In addition, previous revisions to 1-GOI-100-1A had the RFPs placed in AUTOMATIC after placing the Mode Switch in RUN.

C is correct.

D is incorrect. The procedural limit is incorrect. This is plausible because the basis is correct. In addition, previous revisions to 1-GOI-100-1A had the RFPs placed in AUTOMATIC after placing the Mode Switch in RUN. In addition, maintaining steady RPV level at low steam flows has been an issue prior to more advanced electronic control systems becoming available.

5.0 INSTRUCTION STEPS (continued)

MODE/CONDITION CHANGE

NOTES

1) Drywell to Torus differential pressure must be established within 24 hours after reaching 15% RTP per Tech Specs Section 3.6.2.6. (1-OI-64).
2) Primary Containment must be inerted within 24 hours of reaching 15% RTP per Tech Specs Section 3.6.3.2. (1-OI-76).

[81] **WHEN** Reactor is at 15% RTP, **THEN**

- **RECORD** the time 15% RTP was obtained in the NOMS Narrative Log.

  (R) _____ _____ _____
  Initials Date Time

- **ENTER** 24 hour LCO for Drywell to Suppression Pool Differential Pressure. **REFER TO** Tech Specs LCO 3.6.2.6. (N/A if Drywell to Suppression Pool Differential Pressure already established)

  (R) _____ _____ _____
  Initials Date Time

- **ENTER** 24 hour LCO for Primary Containment Oxygen Concentration. **REFER TO** Tech Specs LCO 3.6.3.2. (N/A if Primary Containment is already inerted)

  (R) _____ _____ _____
  Initials Date Time

- **RECORD** Time LCO entered. (N/A if no LCO entry is required.)

  Date _____ Time _____

  (R) _____ _____ _____
  Initials Date Time

5.0 INSTRUCTION STEPS (continued)

CAUTIONS

1) Failure to monitor SJAE/OG CNDR CNDS FLOW, 1-FI-2-42, on Panel 1-9-6 for proper flow may result in SJAE isolation.
2) Changes in condensate system flow may require adjustment to SPE CNDS BYPASS, 1-FCV-002-0190, either in the Control Room or locally. Personnel adjusting this valve locally shall be in direct communication with the Control Room.

[82] **WHEN** stable operation can be maintained, **THEN**

PLACE operating RFPT in automatic operation. **REFER TO** 1-OI-3.

_____ Initials _____ Date _____ Time

[83] **PERFORM** the following for IRMs:

[83.1] **WITHDRAW** all operable IRMs.

(R) _____ Initials _____ Date _____ Time

[83.2] **PLACE** all range switches to a position such that associated alarms are reset.

(R) _____ Initials _____ Date _____ Time

[83.3] **VERIFY** all IRM upscale or downscale alarms are reset.

(R) _____ Initials _____ Date _____ Time

[83.4] **VERIFY** IRM recorder High Alarm setpoint programmed OFF.

_____ Initials _____ Date IM _____ Time

18. RO 261000K3.06 001/C/A/T2G1/CONT/PRI/V.B.8/261000K3.06//RO/SRO/

Unit-2 has experienced a LOCA with the following plant conditions:

- Drywell pressure is 50 psig and rising.
- Drywell O_2 concentration is 16%.
- Drywell H_2 concentration is 5%.
- The Drywell is being vented through SGT "A" train.
- SGT "B" and "C" are unavailable and INOP.

Which ONE of the following can be used to exhaust primary containment atmosphere if SGT "A" were to become INOPERABLE?

A.✔ Vent the Suppression Chamber via the HARDENED SUPPR CHBR VENT in accordance with 2-EOI Appendix 13, Emergency Venting Primary Containment.

B. Vent the Drywell in accordance with 2-EOI Appendix 13, Emergency Venting Primary Containment, allowing the primary containment vent ducts to fail.

C. Vent the Suppression Chamber in accordance with 2-EOI Appendix 13, Emergency Venting Primary Containment, allowing the primary containment vent ducts to fail.

D. Vent the Suppression Chamber in accordance with 2-AOI-64-1, Drywell Pressure and/or Temperature High, or Excessive Leakage into Drywell.

K/A Statement:

261000 SGTS
K3.06 - Knowledge of the effect that a loss or malfunction of the STANDBY GAS TREATMENT SYSTEM will have on following: Primary containment oxygen content: Mark-I&II

K/A Justification: This question satisfies the K/A statement by requiring the candidate to use specific knowledge of the relationship between SGT and the inerting process.

References: 2-OI-76, *Containment Inerting System*, 2-EOI Appendix 13, *Emergency Venting Primary Containment*

Level of Knowledge Justification: This question is rated as C/A due to the requirement to assemble, sort, and integrate the parts of the question to predict an outcome. This requires mentally using this knowledge and its meaning to predict the correct outcome.

0610 NRC Exam

REFERENCE PROVIDED: None

Plausibility Analysis:

In order to answer this question correctly the candidate must determine the following:

1. Drywell pressure is approaching the 55 psig pressure limit.
2. Hydrogen an oxygen have reached explosive concentrations.
3. Recognize which available vent path does NOT require SGT to be OPERABLE.
4. Recognize that venting the Suppression Chamber is preferred over the Drywell to facilitate scrubbing of radioactive fission products.

NOTE: The following distractors are plausible because the vent lineups are physically possible.

A is correct.

B is incorrect. Venting the Suppression Chamber is preferred over the Drywell to facilitate scrubbing of radioactive fission products. In addition, SGT is required for that vent path.

C is incorrect. Destructive venting of the Suppression Chamber is physically possible, but not procedurally authorized.

D is incorrect. Venting per 2-AOI-64-1 requires SGT Operability.

2-EOI APPENDIX-13

EMERGENCY VENTING PRIMARY CONTAINMENT

LOCATION: Unit 2 Control Room

ATTACHMENTS: 1.Tools and Equipment
2.Vent System Overview
3.Hardened Vent Flow Path

(√)

1. **NOTIFY** SHIFT MNGR./SED of the following:

   - Emergency Venting of Primary Containment is in progress. ____

   - Off-Gas Release Rate Limits will be exceeded. ____

2. **VENT** the Suppression Chamber as follows (Panel 9-3):

   a. IF .....EITHER of the following exists:

      - Suppression Pool water level CANNOT be determined to be below 20 ft,

      OR

      - Suppression Chamber CANNOT be vented,

      THEN .....**CONTINUE** in this procedure at Step 3. ____

   b. **PLACE** keylock switch 2-HS-64-222B, HARDENED SUPPR CHBR VENT OUTBD PERMISSIVE, in PERM. ____

   c. **CHECK** blue indicating light above 2-HS-64-222B, HARDENED SUPPR CHBR VENT OUTBD PERMISSIVE, illuminated. ____

   d. **OPEN** 2-FCV-64-222, HARDENED SUPPR CHBR VENT OUTBD ISOL VLV. ____

   e. **PLACE** keylock switch 2-HS-64-221B, HARDENED SUPPR CHBR VENT INBD PERMISSIVE, in PERM. ____

   f. **CHECK** blue indicating light above 2-HS-64-221B, HARDENED SUPPR CHBR VENT INBD PERMISSIVE, illuminated. ____

   g. **OPEN** 2-FCV-64-221, HARDENED SUPPR CHBR VENT INBD ISOL VLV. ____

2. (continued from previous page)

   h. **CHECK** Drywell and Suppression Chamber Pressure lowering. ____

   i. **MAINTAIN** Primary Containment Pressure below 55 psig using 2-FCV-64-222, HARDENED SUPR CHBR VENT OUTBD ISOL VLV, as directed by SRO. ____

3. IF ..... Suppression Chamber vent path is NOT available, THEN ... **VENT** the Drywell as follows:

   a. **NOTIFY** SHIFT MNGR./SED that Secondary Containment integrity failure is possible. ____

   b. **NOTIFY** RADCON that Reactor Building is being evacuated due to imminent failure of Primary Containment vent ducts. ____

   c. **EVACUATE** ALL Reactor Buildings using P.A. System. ____

   d. **START** ALL available SGTS trains. ____

   e. **VERIFY CLOSED** 2-FCV-64-36, DW/SUPPR CHBR VENT TO SGT (Panel 9-3). ____

   f. **VERIFY OPEN** the following dampers (Panel 9-25):

      - 2-FCO-64-40, REACTOR ZONE EXH TO SGTS ____
      - 2-FCO-64-41, REACTOR ZONE EXH TO SGTS. ____

   g. **VERIFY CLOSED** 2-FCV-64-29, DRYWELL VENT INBD ISOL VALVE (Panel 9-3 or Panel 9-54). ____

   h. **DISPATCH** personnel to Unit 2 Auxiliary Instrument Room to perform the following:

      1) **REFER TO** Attachment 1 and **OBTAIN** one 12-in. Banana Jack Jumper from EOI Equipment Storage Box. ____

      2) **LOCATE** terminal strip DD in Panel 9-43, Front. ____

      3) **JUMPER** DD-76 to DD-77 (Panel 9-43). ____

      4) **NOTIFY** Unit Operator that jumper for 2-FCV-64-30, DRYWELL VENT OUTBD ISOLATION VLV, is in place. ____

   i. **VERIFY OPEN** 2-FCV-64-30, DRYWELL VENT OUTBD SOLATION VLV (Panel 9-3). ____

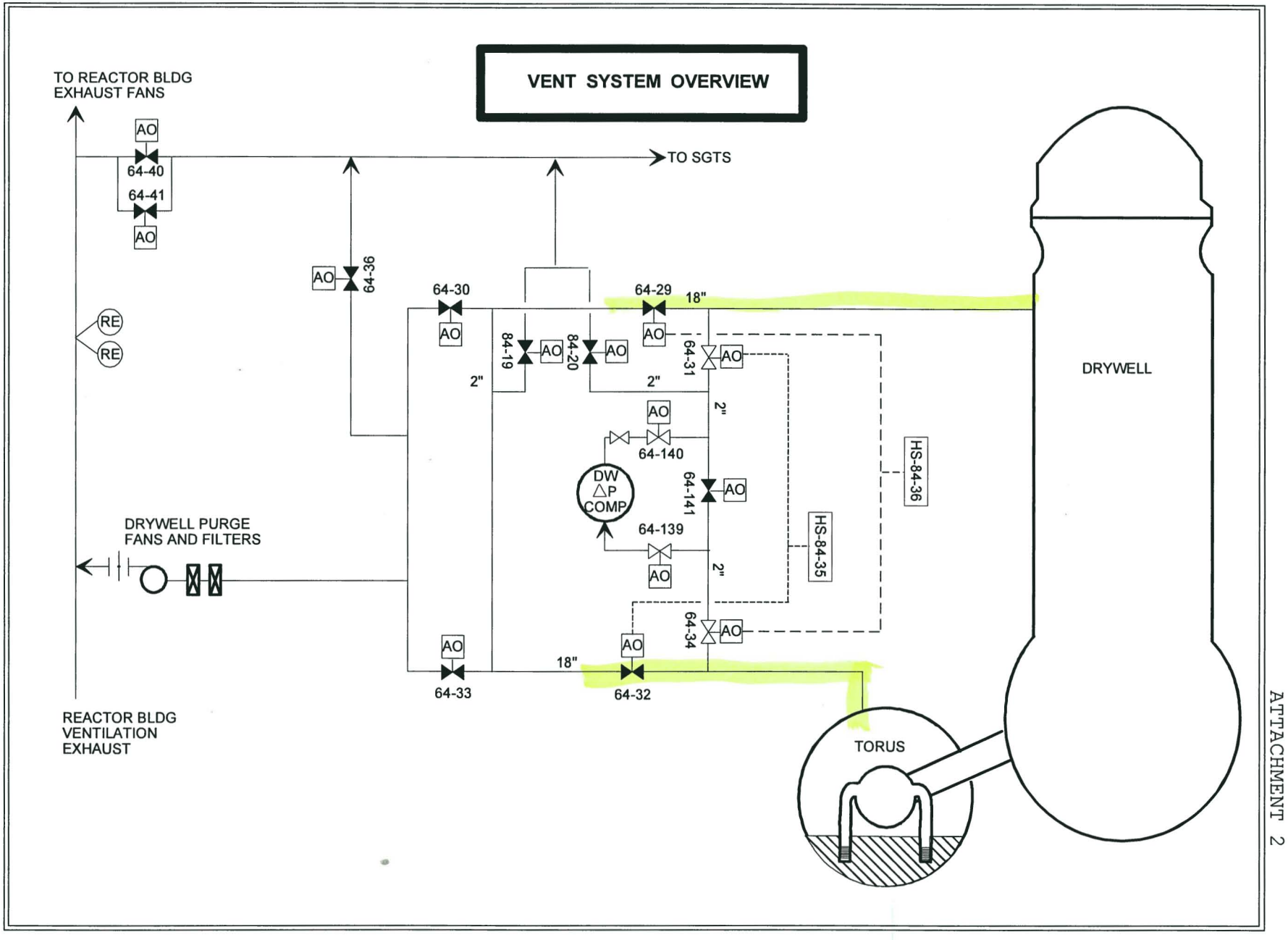
VENT SYSTEM OVERVIEW
TO REACTOR BLDG
EXHAUST FANS
TO SGTS
AO
64-40
64-41
64-36
RE
64-30
64-29
18"
84-19
84-20
64-31
2"
64-140
DW
ΔP
COMP
64-141
64-139
HS-84-36
HS-84-35
DRYWELL PURGE
FANS AND FILTERS
64-34
64-33
64-32
REACTOR BLDG
VENTILATION
EXHAUST
DRYWELL
TORUS

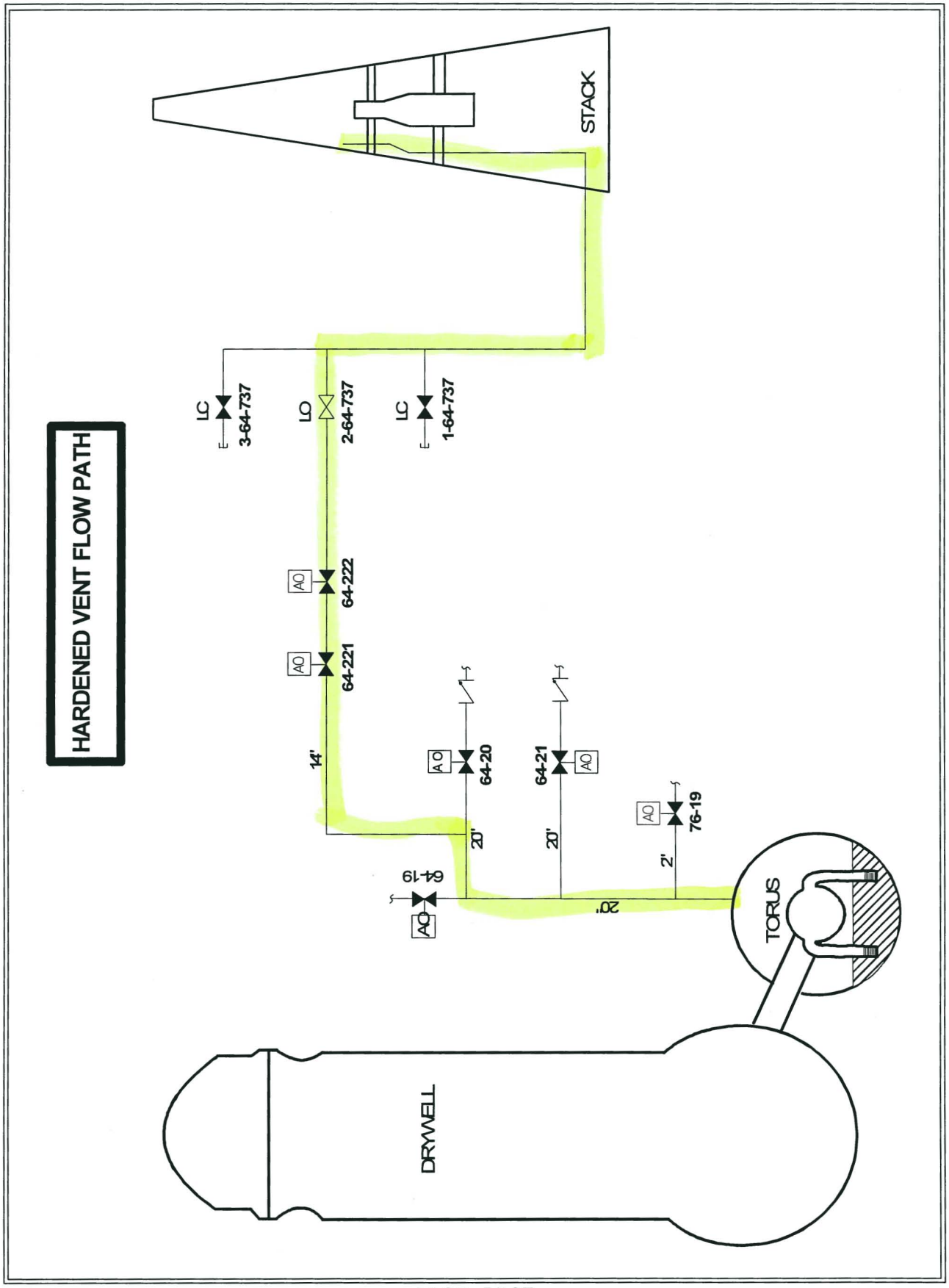
HARDENED VENT FLOW PATH
STACK
LC
3-64-737
LO
2-64-737
LC
1-64-737
AO
64-222
AO
64-221
14'
AO
64-20
20'
64-21
AO
20'
AO
76-19
2'
64-19
AO
20'
TORUS
DRYWELL

4.0 OPERATOR ACTIONS

NOTE

This procedure covers possible multiple symptoms of a problem within primary containment. Any or all of the symptoms may exist. The SRO will direct actions based on symptoms and experience.

4.1 Immediate Actions

None

4.2 Subsequent Actions

[1] **IF** any EOI entry condition is met, **THEN**

ENTER appropriate EOI(s). (Otherwise **N/A**) ☐

[2] **IF** Drywell Pressure is High, **THEN**

PERFORM the following: (Otherwise **N/A**)

[2.1] **CHECK** Drywell pressure using multiple indications. ☐

[2.2] **ALIGN and START** additional Drywell coolers and fans as necessary. **REFER TO** 2-OI-64. ☐

CAUTION

Stack release rates exceeding 1.4 X 10^7 µci/sec, or a SI-4.8.B.1.a.1 release fraction above one will result in ODCM release limits being exceeded.

[2.3] **VENT** Drywell as follows:

[2.3.1] **CLOSE** SUPPR CHBR INBD ISOLATION VLV 2-FCV-64-34 (Panel 2-9-3). ☐

[2.3.2] **VERIFY OPEN**, DRYWELL INBD ISOLATION VLV, 2-FCV-64-31 (Panel 2-9-3). ☐

[2.3.3] **VERIFY** 2-FIC-84-20 is in AUTO and SET at 100 scfm (Panel 2-9-55). ☐

4.2 Subsequent Actions (continued)

[2.3.4] **VERIFY RUNNING** a Standby Gas Treatment Fan STGTS TRAIN C(A)(B) (Panel 2-9-25). ☐

[2.3.5] **IF** required, **THEN**

REQUEST Unit 1 Operator to START Standby Gas Treatment Fans A or B. (Otherwise **N/A**) ☐

CAUTION

If 2-FCV-84-20 closes after 2-HS-64-35 is opened, the reason for valve closure must be cleared and 2-HS-64-35 must be returned to OPEN in order for 2-FCV-84-20 to re-open.

[2.3.6] **IF** required, **THEN**

RECORD venting data in 2-SI-4.7.A.2.a (Otherwise **N/A**) ☐

[2.3.7] **PLACE** 2-FCV-84-20 CONTROL DW/SUPPR CHBR VENT, 2-HS-64-35, in OPEN (Panel 2-9-3). ☐

[2.3.8] **MONITOR** stack release rates to prevent exceeding ODCM limits. ☐

[2.3.9] **WHEN** Drywell pressure has been reduced as required, **THEN**

STOP SGT Train(s). ☐

[2.3.10] **VERIFY** 2-HS-64-35, in AUTO and 2-FCV-84-20 CLOSED (Panel 2-9-3). ☐

[2.3.11] **OPEN** SUPPR CHBR INBD ISOLATION VLV 2-FCV-64-34 (Panel 2-9-3). ☐

[2.3.12] **VERIFY** Drywell DP compressor operates correctly to maintain required Drywell to Suppression Chamber DP. ☐

[2.3.13] **RECORD** SGTS Train(s) run time in appropriate Control Room Reactor narrative log for transfer to 1-SR-2. ☐

19. RO 262001K4.04 001/C/A/SYS/ACDIST/3/262001K4.04//RO/SRO/

Given the following plant alignment:

- 4KV Shutdown Bus 1 43S Switch in MANUAL.
- All 4KV Shutdown Board 43S Switches in AUTO.
- A fault on 4KV Unit Board 1A de-energizes Shutdown Bus 1 and 4KV Shutdown Boards A and B

Which ONE of the following describes the method of re-energizing 4KV Shutdown Board A?

A. 4KV Shutdown Board A alternate supply breaker will auto close (fast transfer) when 4KV Shutdown Board A voltage decays to <30%.

B. 4KV Shutdown Board A alternate supply breaker will auto close (slow transfer) when Shutdown Board A voltage decays to <30%.

C. 4KV Shutdown Board A alternate supply breaker will auto close (fast transfer) when Shutdown Bus 1 voltage decays to <30%.

D.✔ 4KV Shutdown Board A alternate supply breaker will auto close (slow transfer) when Shutdown Bus 1 voltage decays to <30%.

K/A Statement:

262001 AC Electrical Distribution
K4.04 - Knowledge of A.C. ELECTRICAL DISTRIBUTION design feature(s) and/or interlocks which provide for the following: Protective relaying

K/A Justification: This question satisfies the K/A statement by requiring the candidate to use specific plant conditions and times to correctly determine the response of the AC distribution system to a fault which initiates protective relaying.

References: OPL171.036

Level of Knowledge Justification: This question is rated as C/A due to the requirement to assemble, sort, and integrate the parts of the question to predict an outcome. This requires mentally using this knowledge and its meaning to predict the correct outcome.

0610 NRC Exam

REFERENCE PROVIDED: None

Plausibility Analysis:

In order to answer this question correctly the candidate must determine the following:

1. Whether the transfer is a fast transfer or slow transfer.
2. Whether the low voltage is sensed on the line side of the breaker or the load side of the breaker.

NOTE: The plausibility of the distractors is based on determining the answers to the above questions.

A is incorrect. Fast Transfers are MANUAL only. The undervoltage is sensed on the Shutdown BUS side of the breaker.

B is incorrect. The undervoltage is sensed on the Shutdown BUS side of the breaker. This is plausible because the transfer scheme is correct.

C is incorrect. Fast Transfers are MANUAL only. This is plausible because the undervoltage sensing location is correct.

D is correct.