Zion Station

Updated Final Safety Analysis Report

Volume 4

Commonwealth Edison Company

TABLE OF CONTENTS

TABLE OF CONTENTS

TABLE OF CONTENTS

TABLE OF CONTENTS

TABLE OF CONTENTS

TABLE OF CONTENTS

LIST OF TABLES

LIST OF FIGURES

LIST OF APPENDICES

6. ENGINEERED SAFETY FEATURES

6.0 GENERAL

The central objective in reactor design and operation is safe control of reactor fission products under both normal and abnormal circumstances. The methods used to assure this objective are:

1) Design of the reactor core in conjunction with the reactor control and protection systems to preclude release of fission products from the fuel by ensuring fuel clad integrity under normal operating conditions (Chapters 4 and 7).

2) Design of the Reactor Coolant System (RCS) for retention of fission products in the reactor coolant for whatever leakage of fission products to coolant occurs (Chapters 5 and 6).

3) Design of the Containment for retention of fission products for operational and accidental releases beyond the RCS boundary (Chapters 3 and 6).

4) Design of safeguard systems to limit fission product release and dispersal thereby minimizing population exposure for release beyond the Containment (Chapter 6).

The engineered safety features (ESF) are the provisions in the plant which are used to prevent the occurrence or to ameliorate the effects of serious accidents.

The ESFs in this plant are:

1. The Emergency Core Cooling System (ECCS), which provides borated water to cool the core in the event of an accidental depressurization of the RCS. The combination of the control rods and the boron in the injected water provides the necessary control of reactivity required, as described in Section 6.3.

2. The Containment Spray (CS) System, which is used to reduce containment pressure and remove iodine from the containment atmosphere is described in Section 6.5.2.

3. The Reactor Containment Fan Coolers (RCFCs), which are used to recirculate and cool the containment atmosphere in the event of a loss-of-coolant accident (LOCA), are described in Section 6.2.2.1.

4. The Isolation Valve Seal Water (IVSW) System, which acts to reduce the potential for fission product leakage through certain isolation valves, is described in Section 6.2.4.4.

5. The Weld Seam and Penetration Pressurization System which acts to reduce the potential for outleakage through welds in the steel containment liner, is described in Sections 6.2.4.5 and 6.2.4.6.9.

6. Evaluations of techniques and equipment used to accomplish the central objectives, including accident cases, are described in Chapters 3, 6 and 15.

7. The Auxiliary Feedwater (AFW) System, which is used to provide emergency cooldown capability on loss of normal feedwater, is described in Section 6.8.

8. The steel-lined, prestressed, posttensioned concrete Containment structure, as discussed in Chapter 3, which forms a virtually leaktight barrier to the escape of fission products should a LOCA occur.

The design philosophy, with respect to active components in the ESF Systems, is to provide duplicate equipment so that routine service and maintenance is possible during operation without impairment of the safety function of the systems. Major maintenance of equipment of this type would generally be scheduled for periods of refueling and maintenance outages.

Limitations on continued reactor operation during such outages that are provided in the Technical Specifications conform to reasonable, experienced judgment and industry practice and are verified by a reliability analysis.

6.0.1 Engineered Safety Features Criteria

Criteria applying in common to all ESFs are given in this section. Thereafter, criteria which are related to engineered safety features but are more specific to other plant features or systems are listed and cross-referenced in 6.3.1. Those criteria which are specific to one of the ESFs are discussed in the description of that system.

6.0.1.1 Engineered Safety Features Basis for Design

Criterion: Engineered safety features shall be provided in the facility to back up the safety provided by the core design, the reactor coolant pressure boundary, and their protection systems. Such engineered safety features shall be designed to cope with any size reactor coolant piping break up to and including the equivalent of a circumferential rupture of any pipe in that boundary, assuming unobstructed discharge from both ends.

The design, fabrication, testing, and inspection of the core, reactor coolant pressure boundary, and their protection systems give assurance of safe and reliable operation under all anticipated normal, transient, and

accident conditions. However, ESFs are provided in the facility to back up the safety provided by these components. These ESFs have been designed to cope with any size piping break up to and including the circumferential rupture of reactor coolant piping assuming unobstructed discharge from both ends, and to cope with any steam or feedwater line break. The reactor coolant pipe break is not assumed to be concurrent with a steam or feedwater line break inside the Containment.

The release of fission products from the reactor fuel is limited by the ECCS which keeps the fuel in place and substantially intact by cooling the core. The ECCS also limits the metal to water reaction to an insignificant amount.

The ECCS consists of high and low head centrifugal pumps and passive accumulator tanks. The pumps are driven by electric motors. The tanks are self energized and act independently of any actuation signal or power source.

The release of fission products from the Containment is limited in three ways:

1. Blocking the potential leakage paths from the Containment. This is accomplished by:

    a. A steel-lined concrete Reactor Containment with liner weld channels and double barrier piping penetrations either anchored or utilizing testable expansion bellows which are continuously pressurized to form a virtually leaktight barrier preventing the escape of fission products should a LOCA occur.

    b. Isolation of process lines by the Containment Isolation (CI) System and the IVSW System. The IVSW System imposes water sealed double barriers for selected lines which penetrate the Containment.

2. Reducing the fission product concentration in the containment atmosphere. This is accomplished by chemically treated spray which removes elemental iodine vapor from the containment atmosphere by washing action and keeps the iodine in solution in the containment sump.

3. Reducing the containment pressure and thereby limiting the driving potential for fission product leakage. This is accomplished by three independent and redundant CS Systems of equal heat-removal capacity which cool the containment atmosphere and by recirculation of the containment atmosphere through fan cooler units.

6.0.1.2 Reliability and Testability of Engineered Safety Features

Criterion: All engineered safety features shall be designed to provide such functional reliability and ready testability as is necessary to avoid undue risk to the health and safety of the public.

A comprehensive program of plant testing is formulated for all equipment systems and system controls vital to the functioning of ESFs. The program consists of performance tests of individual pieces of equipment in the manufacturer's shop, integrated tests of each system, and periodic tests of the activation circuitry and mechanical components to assure reliable performance, upon demand, throughout the plant lifetime.

The initial tests of individual components and the integrated test of each system complement each other to assure performance of the systems as designed and to prove proper operation of the actuation circuitry. These tests are detailed in Chapters 6 and 14.

Routine periodic testing of the ESF components is detailed in the Technical Specifications. In the event that one of two or more redundant components should require maintenance as a result of failure to perform during the test, the necessary repairs or adjustments are made and the unit is retested immediately. Satisfactory performance of the remaining redundant component(s) is proof of the availability of the ESF. It is not necessary to adjust plant load during the period that an ESF component may be out of service as long as redundant equipment is operable.

6.0.1.3 Missile Protection

Criterion: Adequate protection for those engineered safety features, the failure of which could cause an undue risk to the health and safety of the public, shall be provided against dynamic effects and missiles that might result from plant equipment failures.

A LOCA or other plant equipment failure might result in dynamic effects or missiles. For ESFs required to ensure safety in the event of such an accident or equipment failure, protection is provided primarily by provisions taken in the design to prevent the generation of missiles. Protection is also provided by the layout of plant equipment or by missile barriers in certain cases. Reference is made to Section 3.5 for a discussion of missile protection.

Injection paths leading to unbroken reactor coolant loops are protected against damage as a result of the maximum reactor coolant pipe rupture by layout and structural design considerations. Injection lines penetrate the main missile barrier, which is the loop compartment wall, and the injection headers are located in the missile-protected area between the loop

compartment wall and the containment wall. Individual injection lines, connected to the injection header, pass through the barrier and then connect to the loops.

Separation of the individual injection lines is provided to the maximum extent practicable. Movement of the injection line, associated with rupture of a reactor coolant loop, is accommodated by line flexibility and by the design of the pipe supports such that no damage outside the loop compartment is possible.

6.0.1.4 Engineered Safety Features Performance Capability

Criterion: Engineered safety features, such as the emergency core cooling system and the containment heat removal system, shall provide sufficient performance capability to accommodate the failure of any single active component without resulting in undue risk to the health and safety of the public.

Each ESF provides sufficient performance capability to accommodate any single failure of an active component and still function in a manner to avoid undue risk to the health and safety of the public.

Instrument control air is supplied to numerous components in the plant ESFs, however loss of instrument air will cause the component to fail to the safe position. The IVSW automatic valves require air for operation; their air supply is taken from the Seismic Class I penetration pressurization air compressors or, if air is not available, from a nitrogen backup supply.

During the injection phase, any single active failure will not prevent the accomplishment of the ECCS objectives as stated in Section 6.3.1.

During the recirculation phase, the ECCS is tolerant of one active or one passive failure, but not in addition to a single active failure in the injection phase. One active or one passive failure in the systems required for long-term ECCS operation will not prevent the accomplishment of the ECCS objectives as stated in Section 6.3.1, nor cause the total offsite dose to exceed 10CFR100 guidelines (see Reference 1), with credit for incident detection and operator action.

In the particular case of a system component being out for maintenance, an additional active or passive failure is not considered. The maximum period that operation would be continued with one component out for maintenance is specified in the Technical Specifications. For more information, see Section 6.2.

Since the design described in the PSAR, changes have been made to certain systems which are required to operate for long-term heat removal following

a LOCA. These changes mitigate the effects of leakage and increase redundancy. They are as follows:

1. Leaktight valve chambers have been provided for the first recirculation line suction valve to the Residual Heat Removal (RHR) System pumps;

2. Additional valving in the crossover piping in the RHR System to afford additional protection for postulated leakage;

3. RHR pumps are vertical type, and the RHR Pump Rooms are provided with a common leak collection sump with redundant sump pumps;

4. Additional loops and valving were provided in the Component Cooling Water (CCW) System to isolate for leakage;

5. Additional valves in the Service Water (SW) System were provided to isolate for leakage.

Section 5.2.5 of the UFSAR describes the leakage detection provisions provided for the RHR system along with the offsite dose considerations. The detection devices described in Section 5.2.5 are specifically designed to accommodate early detection of passive failures during recirculation following a LOCA. Leakage detection provisions for the SW System and CCW System are described in Sections 9.2.1.3.1 and 9.2.2.3.3, respectively.

The extreme upper limit of public exposure is taken as the levels and time periods presently outlined in 10CFR100, i.e., 300 rem to the thyroid in two hours at the exclusion radius and 300 rem to the thyroid over the duration of the accident at the low population zone distance (see Reference 1). The accident condition considered is the hypothetical case of a release of fission products as delineated in TID 14844 (see Reference 2). Also, the total loss of all offsite power is assumed concurrently with this accident.

The ECCS and related pumps, which must operate following the LOCA, include the RHR, safety injection (SI), CS, centrifugal charging, CCW, and SW pumps. During the injection phase of operation following a LOCA, all ECCS pumps (two centrifugal charging, two SI, and two RHR) and the CS pumps draw suction from the refueling water storage tank (RWST). During the recirculation phase, the RHR pumps take suction from the recirculation sump and supply flow to the CS header and the SI and charging pump suction headers. A single active failure cannot occur in the suction line from the RWST to the SI pumps due to valve MOV-SI8806 in the line or to the RHR suction line due to valves MOV-SI8812A and MOV-SI8812B. These valves are normally open and are not required to operate to permit the ECCS to perform its function.

Minimum available net positive suction head (NPSH) to the SI, centrifugal charging, and CS pumps occurs when these pumps are taking suction from the RWST during the injection phase immediately following the LOCA. Minimum available NPSH for the RHR pumps occurs during the postaccident recirculation phase when suction is taken from the recirculation sump. The required and minimum available NPSH to these pumps are shown in Table 6.0-1.

Since maximum required NPSH and minimum available NPSH occur at the runout flow for the pumps, this flow was assumed for calculation purposes. The temperature of the RWST water varies between 40° and 100°F.

Available NPSH at runout flow to these pumps at both the high and low temperatures was calculated. Suction line friction losses are higher at 40°F, but the higher vapor pressure of 100°F water leaves less available NPSH to the pumps. Friction losses were calculated using the pipe and fitting resistances given in the Crane Co. Technical Paper Number 410 (see Reference 3).

During the postaccident phase, the water in the recirculation sump is at a higher temperature than during injection. The elevated containment pressure following a LOCA somewhat offsets the higher vapor pressure of the water; however, no credit is taken for this. In addition, the piping to the RHR pump suctions is quite direct, hence friction losses are small.

The available NPSH for the injection mode was calculated as follows:

$$NPSH_{avail} = h_{el} + h_{subcooling} - h_{HL}$$

h_{el} elevation head for this case is defined as the difference in elevation between the bottom of the RWST and the pump center line.

$h_{subcooling}$ defined as the difference between atmospheric pressure and the vapor pressure of water in the RWST at 100°F.

h_{HL} head losses in the piping from the RWST to the pumps at maximum pump runout flows.

The available NPSH for the RHR pump during the recirculation mode was calculated as follows:

$$NPSH_{avail} = h_{el} + h_{subcooling} - h_{HL}$$

h_{el} elevation head for this case is defined as the difference in elevation between the water level in Containment and the pump centerline

h_{HL} head losses in the piping from the containment sump to the RHR pump at maximum pump runout flows.

$h_{subcooling}$ to conservatively conform to Standard Guide No. 1, the coolant inside Containment is assumed to be saturated and no credit is taken for subcooling (i.e., $h_{subcooling} = 0$).

The available NPSH as calculated for each pump is considered to be conservative for the following reasons:

1. The elevation head used is the differential between the bottom of the RWST and the pumps. Under actual conditions the injection phase is terminated at the RWST low low level alarm point, with 105,000 gal remaining in the tank, which would give an additional 10 ft of NPSH.

2. Credit is taken for subcooling only to 100°F. Actual temperatures of coolant in the RWST will be closer to 75°F.

3. No credit is taken for subcooling of fluid in the containment sump or for increased containment pressures following the LOCA.

Adequate NPSH is assured for all ECCS pumps during the injection phase following a LOCA by the RWST indicators and the low level alarm which signals the operator that the recirculation phase should be initiated. With the RWST depleted to approximately 145,000 gallons, sufficient water should be available on the containment floor and in the recirculation sump to provide the required NPSH for the RHR pumps. Sump level instrumentation is provided in the Control Room, and a comparison of the indicated level to the minimum RHR NPSH required will assure the operator that the transfer to recirculation can be accomplished without cavitation.

Adequate NPSH is assured for the RHR pump during recirculation with the recirculation sump full and the adjacent containment floor covered to a level of one foot.

Adequate NPSH is assured for the high head pumps by the fact that both the SI and centrifugal charging pump headers can be supplied from either RHR pump through a crosstie between the high head pump suction headers. One RHR pump has the capability of supplying the SI and centrifugal charging pump suction headers and delivering to the core through two RCS hot legs.

Inadvertent loss of NPSH to the high head pumps would result in pump cavitation and a reduction in delivery capabilities. However, the fact that either RHR pump is capable of supplying coolant to the high head pumps

at pressures well above the required NPSH, and the redundant piping systems from the RHR pumps to high head pumps, makes a loss of NPSH highly improbable.

The CS System is designed to spray borated water and sodium hydroxide (NaOH) into the containment atmosphere to reduce containment pressure and remove iodine from the Containment. The system will limit offsite and site boundary doses to within 10CFR100 limits (see Reference 1) with a single active failure at any time.

The AFW System is designed to provide a supply of feedwater to the steam generators in the event of a loss of offsite power, which would prevent operation of the main feedwater pumps. The system is designed to supply sufficient feedwater to prevent release of reactor coolant through the pressurizer safety valves with a single active failure.

The RCFC units are designed to remove heat from the Containment Building during both normal operation and in the event of a LOCA. The RCFC units are an ESF system. There are a total of five RCFC units per Containment operating in parallel. During normal operation, a maximum of four units are required to remove the design heat load. For postaccident operation, a minimum of three units must function to satisfy ESF requirements. Since the units are ESF, they are located outside of the missile shield.

6.0.1.5 Engineered Safety Features Components Capability

Criterion: Engineered safety features shall be designed so that the capability of these features to perform their required function is not impaired by the effects of a loss-of-coolant accident to the extent of causing undue risk to the health and safety of the public.

Active components of the ECCS (with the exception of injection line isolation valves) and the CS System are located outside the Containment and not subject to Containment accident conditions. The accumulators are located in a missile shielded area.

Safety-related electrical equipment (i.e., instrumentation, motors, cables, and penetrations) located inside the Containment are selected to meet the most adverse accident conditions to which they may be subjected. These items are either protected from Containment accident conditions or are designed to withstand, without failure, exposure to the worst combination of temperature, pressure, and humidity expected during the required operational period.

Zion Station has instituted an Environmental Qualification (EQ) program in response to and in compliance with 10CFR50.49 (see Reference 4). This program assures that specific critical components needed to function during

or after the design basis accidents will function despite exposure to harsh environmental conditions resulting from the accident.

The EQ program consists of two parts, initial qualification and ongoing qualification maintenance. The initial qualification includes review of the qualification test data provided by the equipment vendor and/or independent testing organizations, analysis of the applicability of the test data to the Zion Station accident and postaccident conditions, and inspection of the equipment installed to verify similarity and traceability of the qualified components. Ongoing qualification maintenance includes all the routine inspections, performance tests, and periodic inspection/maintenance required to maintain the equipment in the qualified state.

The EQ program is described in the Zion Station Environmental Qualification Report. Individual component EQ requirements are detailed in a set of environmental qualification documentation packages. These are controlled documents, updated as required, and maintained at both Zion Station and the Corporate Headquarters in accordance with applicable administrative procedures.

6.0.1.6 Accident Aggravation Prevention

Criterion: Protection against any action of the engineered safety features which would accentuate significantly the adverse after-effects of a loss of normal cooling shall be provided.

The reactor is maintained subcritical following a primary system pipe rupture accident. Introduction of borated cooling water into the core results in a net negative reactivity addition. The control rods insert and remain inserted.

The delivery of SI water to the reactor vessel following accidental expulsion of reactor coolant does not cause further loss of integrity of the RCS boundary.

Protection, in the form of barriers, restraints, supports, and physical separation has been provided to assure that in the unlikely event of an accident the following criteria will be met:

1. Containment integrity will be maintained throughout the accident.

2. A second accident will not occur as a result of the original accident.

3. Sufficient safety features will be available to control the accident and safely shut the plant down.

6.0.1.7 Sharing of Systems

Criterion: Reactor facilities may share systems or components if it can be shown that such sharing will not result in undue risk to the health and safety of the public.

ESFs are not shared between Units 1 and 2.

6.0.2 References, Section 6.0

1. 10CFR100, Reactor Site Criteria.

2. TID 14844, Atomic Energy Commission Report, Calculation of Distance Factors for Power and Test Reactor Sites, March 23, 1962.

3. Crane Co. Technical Paper Number 410.

4. 10CFR50.49, Environmental Qualification of Electric Equipment Important to Safety for Nuclear Power Plants.

TABLE 6.0-1

NET POSITIVE SUCTION HEADS FOR
POST-LOCA OPERATIONAL PUMPS

	Pump	Flow and Condition	Suction Source	Minimum Available NPSH	Required NPSH	Water Temp
1.	Safety Injection	650 gpm runout flow	Refueling Water Storage Tank	43.5* ft	22 ft	100°F max
2.	Centrifugal Charging	550 gpm runout flow	Refueling Water Storage Tank	25.6* ft	23 ft	100°F max
3.	Residual Heat Removal	4500 gpm runout flow	Refueling Water Storage Tank	50.6* ft	19 ft	100°F max
			Recirculation Sump	24.9** ft	19 ft	saturation at design pressure
4.	Containment Spray	4000 gpm runout flow	Refueling Water Storage Tank	41.2* ft	33 ft	100°F max
5.	Component Cooling	4600 gpm rated flow	Surge Tank @ 617' el.	74 ft	14 ft	135°F max
6.	Service Water	22,000 gpm rated flow	Plant Intake	44 ft	32 ft	80°F

* NPSH calculated with static head based on water level at bottom of Refueling Water Storage Tank

** NPSH calculated with static head based on water level 3.5 ft above containment floor.

6.1 ENGINEERED SAFETY FEATURE MATERIALS

6.1.1 Metallic Materials

Text relating to this information can be found in the UFSAR sections where the individual engineered safety feature (ESF) systems and components are discussed.

6.1.2 Organic Materials

Text relating to this information can be found in the UFSAR sections where the individual ESF systems and components are discussed.

6.2 CONTAINMENT SYSTEMS

6.2.1 Containment Functional Design

This information is covered in Chapter 3 and Section 15.6.

6.2.2 Containment Heat Removal Systems

6.2.2.1 Reactor Containment Fan Cooler System

6.2.2.1.1 Design Basis

The Reactor Containment Fan Cooler (RCFC) System is designed to cool the Reactor Containment environment during both normal and abnormal conditions. During normal operation, four out of the five individual cooler assemblies are designed to dissipate the total Containment maximum sensible heat gain of 15.7×10^6 Btu/hr. During postaccident conditions, three out of the five cooler assemblies will remove a total sensible plus latent heat load of 360×10^6 Btu/hr. The cooler assemblies are designed to operate at a maximum of 47 psig and 271°F and density of 0.172 lb/ft^3. The equipment is designed for a radiation exposure of 10^{-1} rads per hour during normal operation, resulting in an integrated dose of 4×10^4 rads over the 40-year plant life. For postaccident operation, the equipment is designed for 2×10^6 rads per hour during the first three hours and an integrated dose of 2.0×10^8 rads over the 40-year plant life.

Since the RCFC System is an engineered safety feature (ESF), it must withstand the adverse conditions occurring during and following a loss-of-coolant accident (LOCA). Equipment will be showered with a water spray of 0.15 gal/min - ft^2. The spray has a nominal chemical content of boric acid (H_3BO_3) solution equivalent to 2000 ppm boron adjusted to a pH of 10 with sodium hydroxide (NaOH). This spray could vary in chemical content during recirculation.

The following environmental description constitutes the design condition for postaccident operation:

1. Postaccident environment conditions for equipment design, pressure versus time (see Figure 6.2-1).
2. Postaccident environment conditions for equipment design, temperature versus time (see Figure 6.2-1).
3. Instantaneous gamma dose rate inside the Containment as a function of time after release (see Figure 6.2-2).
4. Integrated gamma dose level inside the Containment as a function of time after release (see Figure 6.2-2).

6.2.2.1.2 System Design and Operation

6.2.2.1.2.1 System Design

The RCFC units are designed to remove heat from the Containment Building during both normal operation and in the event of a LOCA. The RCFC units are an ESF system.

There are a total of five units per Containment operating in parallel. During normal operation, a maximum of four units are required to remove the design heat load. For postaccident operation, a minimum of three units must function to satisfy ESF requirements. Since the units are ESF Systems, they are located outside of the missile shield.

Each RCFC unit is composed of the following subassemblies:

1. Fan Assembly
2. Motor Assembly
3. Cooling Coil Assembly (Two banks of six coils)
4. Enclosure Module A
5. Enclosure Module B
6. Enclosure Module C
7. Control Dampers (Locked open)
8. Backdraft Dampers

The enclosure is shown on Figure 6.2-3 and the layout of the unit in the Containment is shown on Figure 6.2-4. The RCFC design characteristics are listed in Table 6.2-1. Table 16.3-4 contains a listing of the RCFC dampers and denotes the accident position of each required damper.

The RCFC System ducts in the Containment were designed to withstand a 1 g horizontal seismic acceleration. A review of the frequencies of this ductwork indicates that 1 g is a very conservative seismic force. The supports for all Seismic Class I ducts were designed by using a static seismic coefficient equal to the peak of the appropriate floor response spectra.

6.2.2.1.2.2 System Operation

During the normal and post-LOCA operating mode, the air flow is withdrawn from the Containment through the return air ductwork across the inlet flow damper and into Enclosure Module A. The air flow is then through and across the outlet flow damper into Enclosure Module B and into the two banks of coils. When a LOCA is sensed, the fan motors are automatically switched to low speed to provide proper flow of the steam-air mixture.

A gravity actuated backdraft damper is provided in the ventilation system discharge ductwork from each fan. These dampers serve to isolate units

from the ventilation system when the fan is not in use and to protect each unit from damage due to a reverse flow during a LOCA pressure transient.

The cooling coils remove heat from the air with the fan providing the required air flow rates. Cooling water is supplied by the Service Water (SW) System. Drain troughs and piping are provided to remove condensate from the cooling coils. The drain piping is routed to the containment sump.

6.2.2.1.2.3 Component Description

6.2.2.1.2.3.1 Fan-Motor

The centrifugal fan is directly driven by a two-speed, totally-enclosed motor which contains an integral air-to-water heat exchanger. Service water is the cooling media for the motor heat exchanger. The motor operates at the high speed during normal operation and at the low speed during postaccident operation. Fan-motor space heaters are provided to maintain favorable conditions of temperature and humidity in their environment during shutdowns. Table 6.2-1, Items 1 and 2, describes the fan and motor design.

6.2.2.1.2.3.2 Dampers

The inlet and outlet flow dampers are permanently fixed in the open direction. All air and electrical connections have been disconnected so that they may not be activated. The normal and post-LOCA flow path is always across these open dampers.

6.2.2.1.2.3.3 Cooling Coils

The plate-finned cooling coils remove heat from the containment air. During normal operation, the main mode of heat transfer is sensible cooling. During accident operation, cooling by condensation is dominant. Drain troughs are provided to collect and remove the condensate. Service water is the tube side cooling media.

The drain troughs on the cooling coils are $2^1/_2$ inches high by 6 inches wide. Each coil is provided with its own drain trough on the downstream side. Each drain trough has its own 2-inch-diameter downspout routed directly to the coil drain tank. Plugging of a downspout would cause the drain trough to overflow water onto the next horizontal adjacent coil drain trough where it would be routed directly to the cooling coil bank. The cooling coil bank has a total of 12 drain troughs and 10 downspouts (the bottom two coils drain directly into the cooling coil drain tank), and thus the coil bank design assures adequate drainage of the condensate to the main 8-inch coil bank drain.

Table 6.2-1, Item 3, describes the cooling coil assembly design.

6.2.2.1.2.3.4 Housing Relief Damper

Dampers are provided to relieve the pressure differential occurring across the housing during any initial accident pressure transient. The damper will open at a differential pressure of a few inches of H_2O and is sized to limit the differential pressure across the enclosure to 1.5 psi.

Table 6.2-1, Item 5, describes the housing relief damper design.

6.2.2.1.2.3.5 Backdraft Damper

The RCFC distribution ductwork discharges directly into the lower Containment area. Due to limited vent areas into the upper Containment volume, the lower areas will pressurize more rapidly than the upper volume.

To protect the RCFC fans and motors against the adverse effects of a LOCA transient induced reversed flow, backdraft dampers are provided in the discharge ductwork. The dampers are designed to close in 70 milliseconds.

The dampers are gravity actuated and are normally closed when the fan is not running. Dampers open under the fan discharge pressure but will close on any reverse flow to prevent backflow through the fan.

Table 6.2-1, Item 4, describes the backdraft damper design.

6.2.2.1.2.3.6 Control and Power Circuits

For each unit there are five 200/200-HP, 2-speed (1200/900 rpm) fan cooler units which are powered from the 480-Vac ESF system. Control power is provided by the 125-Vdc systems. Control of the units, which are normally run at high speed, is from separate control switches on the main control board, ESF Section. Abnormal motor or fan vibration indicating lights and reset switches, monitor lights for low-speed operation, and motor load current indicating ammeters are also located on the main control board. An accident signal will automatically start and/or switch all fan cooler units to low speed. The units are also interlocked with their respective service water discharge valve to ensure that the discharge valves are open whenever the unit is in operation.

Alarms include auto-start, auto-trip, out-of-service, and motor/fan high vibration. The fan coolers are testable while at power as part of the ESF Testing System.

6.2.2.1.3 Design Evaluation

6.2.2.1.3.1 Range of Containment Protection

The RCFC System provides the design heat removal capacity for the Containment following a LOCA assuming that the core residual heat is released to the Containment as steam. The system accomplishes this by continuously recirculating the air-steam mixture through coiling coils to transfer heat from Containment to service water.

The performance of the RCFC System in pressure reduction is discussed in Section 15.6.5.

Any three of the five fan cooler units will provide sufficient heat removal capability to maintain the postaccident containment pressure below the design value assuming that the core residual heat is released to the Containment as steam.

6.2.2.1.3.2 System Response

The starting sequence and timing for the fan cooler units following a LOCA with loss of offsite power are described in Chapter 8.

6.2.2.1.3.3 Single Failure Analysis

A failure analysis has been made on all active components of the system to show that the failure of any single active component will not prevent fulfilling the design function. This analysis shows that single active failure could prevent only one fan cooler unit from functioning. Since only three of the four remaining units are required, the cooling function is unimpaired.

6.2.2.1.3.4 Reliance on Interconnected Systems

The principal systems which are interconnected with the RCFC System are the SW System and the Electrical System. The service water supply to the fan coolers is a redundant system such that the failure of any one single component or pipe will not reduce the cooling capacity of the fan cooler units below that required for either accident or normal operational modes. The SW System is described in Section 9.2.1.

Upon loss of auxiliary electrical power, the RCFCs are supplied power from the diesel generators. The Electrical System is described in Chapter 8. The control and power circuits to the RCFCs is addressed in Section 6.2.2.1.2.3.6.

6.2.2.1.3.5 Reliability Evaluation of the Reactor Containment Fan Cooler Motor

The basic design of the motor and heat exchanger prevents the incident environment, in any major sense, from entering the motor winding. A limited amount of inleakage may occur due to equalization of motor interior pressure.

The inleakage is directed to the heat exchanger coils where the moisture is condensed. If some moisture should pass through the coil, the environment would "clean up" due to the continuous recirculation of the interior environment through the heat exchanger.

It will be noted that the motor insulation hot spot temperature will not exceed 150°C even under accident conditions. Normal life could be expected with a continuous temperature of 155°C, since Class F insulation is used.

During the lifetime of the plant, these motors perform the normal heat removal service and, as such, are only loaded to approximately 151 HP.

The bearings are designed to perform in the incident ambient temperature conditions. However, it will be noted that the interior bearing housing details are cooled by the heat exchanger. The bearing temperatures will not exceed 140°C under maximum accident conditions.

The insulation has high resistance to moisture, and tests performed indicate the insulation system would survive the incident ambient moisture condition without failure. The heat exchanger system of preventing moisture from reaching the winding keeps the winding in much more favorable conditions. It should be noted that, at the time of the postulated incident, the load on the fan motor would increase; therefore, internal motor temperature would increase and would tend to drive any moisture out of the winding. Additionally, the motors are furnished with insulation voltage margin beyond the operating voltage of 440 V.

Following the incident rise in pressure, it is not expected that there will be significant mixing of the motor (closed system) environment and the containment ambient.

The heat exchanger has been designed using a conservative 0.002 fouling factor.

To prove the effectiveness of the heat exchanger in inhibiting large quantities of the steam-air mixture from impinging on the winding and bearings, a full-scale motor and heat exchanger of the same type were subjected to prolonged exposure to simulated accident conditions. The test exposed the operating motor to a steam-air mixture as well as boric acid and alkaline spray at 80 psig and saturated temperature conditions.

Insulation resistance, winding and bearing temperature, relative humidity, voltage and current, as well as heat exchanger water temperature and flow were recorded periodically during the test.

Following the test, the motor was disassembled and inspected to further assure that the unit performed as designed. The post-testing inspection showed no degradation of the motor components.

A detailed description of the environmental tests performed on the motor unit is provided in Section 6.2.2.1.5.

6.2.2.1.4 Minimum Operating Conditions

The Technical Specifications establish limiting conditions and surveillance requirements for the RCFC units. RCFC dampers required by the Technical Specifications and their associated accident position are given in Table 16.3-4.

6.2.2.1.5 Inspection and Testing

6.2.2.1.5.1 Motor Unit Environmental Tests Summary

A fan cooler motor, similar to those installed at Zion, was subjected to a series of nine tests run under conditions more severe than expected in the LOCA or steam-break accidents. Approximately 100 hours of testing under load conditions have been completed on the motor at a pressure of 78 psig and a temperature of 290°F. Chemical spray consisting of 1.7 wt% boric acid adjusted to a pH of 9.5 (using sodium hydroxide) was injected during approximately 30% of the tests. The motor performed satisfactorily during the tests. It was then partially disassembled and visually inspected. The motor windings were found to be in virtually the same condition as in the pretest. The results of these tests may be found in Reference 1.

The motors were tested in accordance with the accident environment specified in IEEE Standard 334.

The motor tested was of different size and design than those installed at Zion. A discussion of the validity of this testing follows.

The 200-HP motor used at Zion has the same frame size (National Electrical Manufacturers Association (NEMA) 588.5) and associated parts as the 300-HP motor used in tests described above. However, it is recognized that winding differences merit consideration and the tested machine should have the most adverse parameters of any to be designed later. A new test was conducted in 1971 to remove all questions about adequacy in meeting IEEE Standard 334 and, in particular, to accentuate salient winding features:

Strength of end turns: A 300-HP winding has high stiffness against bending (cantilever) forces. The solution was to wind the test machine for 200 HP so that any higher horsepower would have more conservative stresses in the winding.

Number of windings: This question was answered by winding the test machine with two separate windings. Hundreds of transfers were made from high to low speed windings and back to remove all doubt about the adverse effect of voltage surges, excessive temperature rise during transfer, and the possibility of physical damage to these relatively flexible windings during "plugging" stresses and high thermal transients.

Thermal gradients: Since 2300-V insulation is thick and copper cross section falls with HP rating, it follows that the 200/200-HP winding had adverse (high) temperature gradients compared with higher horsepower ratings.

Attention is called to the fact that the worst case is proven for each parameter, so machine size is of no consequence. However, many prefer a "full-size" motor, so the large frame was used to make the "parametric modelling" concept applicable to all smaller motors.

The following are typical bearing temperatures for a heat exchanger motor of the type used on the Zion Plant.

	Bearing Temperature
Normal (27°C ambient)	30°C
Accident (80 psig - 323°F)	140° to 148°C
Postaccident (16 psig - 250°F)	100° to 105°C

Windings are designed for Class A temperatures or less in normal service to obtain 40-year thermal life. Typical accident temperatures are shown to be in the 140°C range at peak steam temperatures. The insulating hot spot temperature will be somewhat less for a two-speed motor designed not to increase HP during the accident and is expected to be about 120°C for Zion motors.

Visual inspection after the test showed the area between the plates was essentially free of any deposit that would reduce cooling passages. No boric acid crystals were found anywhere in the motor assembly. Attention is called to the fact that the heat exchanger check valves open only momentarily during pressure equalization, so only trace quantities of boric acid have been found by analysis of bearing grease, etc. No crystals were seen inside the motor assembly.

Tests with heat exchanger motors in simulated accident environments continue to reinforce the basic premise that both bearings and windings are

held in temperatures and humidities for which extensive field experience exists. This is supplemented by empirical data which shows the margins of safety to coolant and drying effect of the heat exchanger. Under these conditions, it seems entirely feasible to predict reliable, full-term postdesign basis event operation from short-term proof tests.

Component tests in simulated accident environments continue to show the marked advantage of sealed insulation systems such as "Thermalastic" (Westinghouse Electric Corporation Trademark) Epoxy, as compared with polyamide systems, when tested for stability in hot, moist environments.

Use of 2300-V, formwound insulation on 460-V motors cuts electrical stresses (volts per mil) to a fraction of that normally provided on 460-V machines. This sharp reduction in stress adds significantly to the feasibility and reliability of extended postaccident service.

6.2.2.1.5.2 Motor Insulation Irradiation Testing

The testing program has been completed on the effects of radiation on the WF-8AC "Thermalastic" Epoxy Insulation System used in the RCFC motor. Test descriptions and results are presented in Reference 2.

Irradiation of formwound motor coil sections was accomplished up to exposure levels exceeding that calculated for the design basis LOCA. Three coil samples received the following treatment sequence: irradiation, high-potential test, vibration test, and high-potential test and breakdown voltage test. Nine coil samples received an alternate treatment sequence: thermal aging, high-potential test, irradiation, high-potential test, vibration test, (six-of-nine coil samples), and high potential test and breakdown voltage test.

All coil samples passed the high-potential tests. The breakdown voltage levels of all coils were well in excess of those required by the design and clearly indicate that the RCFC Motor Insulation System will perform satisfactorily following exposure to the radiation levels calculated for the design basis accident (DBA).

6.2.2.1.5.3 Motor Lubricant Irradiation Testing

Tests were performed on samples of unirradiated and irradiated lubricant. The lubricant is used in the RCFC fan bearing as well as the motor bearing. The results of these tests indicate that the shear stability, or consistency, of the grease is increased by irradiation to levels anticipated in the Containment following a DBA. The consistency of the grease following irradiation remained within the most common recommended consistency for ball bearing application (NLGI #2).

The purpose of the test program was to establish the effect of irradiation on the bearing lubricant used on both the RCFC motor fan bearing and on the

motor bearing. The maximum calculated one-year integrated dose on the bearing lubricant, using the DBA (see Reference 3) with no credit for fission product removal from the containment atmosphere other than by natural decay, is 1.5 x 10^8 R and would be experienced by the fan bearings. The motor bearings would receive a lesser exposure due to self-shielding effects of the motor housings.

Samples of the lubricant were placed in a vented 1.5- x 12-inch aluminum tube. The tube was then placed adjacent to a 34 kilocurie cobalt 60 source and irradiated for a period of 79 hours. Dosimetry measurements were made at various locations in the tube using Dupont light blue calibration paper 300 MS-C, #CB-91639.

Following exposures to average levels of 1.2 x 10^8 R, 1.5 x 10^8 R, and 1.8 x 10^8 R, the irradiated grease, along with unirradiated grease taken from the same supply, were subjected to the Micro Cone Penetration Test using standard apparatus conforming to American Society for Testing and Materials (ASTM) D1403-56T.

The results of the penetration test are presented in Table 6.2-2. In general, it was found that as exposure was increased, the grease underwent a change in thickness to the point that, at 1.8 x 10^8 R, sufficient change had taken place to cause the grease to increase in consistency to an NLGI #2 rating as the grease was "worked" or sheared rather than decrease as in the unirradiated grease. The most commonly used greases for ball bearing applications, such as those in the RCFC, have consistencies ranging between NLGI #1 and #3.

Understanding of the data listed in Table 6.2-2 may be afforded by the listing of industry standards for lubricating greases in Table 6.2-3.

6.2.2.1.5.4 Operational Testing

The operational testing of the RCFC System will be as outlined in the Technical Specifications. Due to the fact that four of the five fan cooler units are normally in continuous service during reactor operation, a continuous verification of unit availability is achieved. The fan cooler units will be rotated in service to provide this verification for all five units.

6.2.2.2 Containment Spray System

This information is covered in Section 6.5.2.

6.2.3 Secondary Containment Functional Design

This section is not applicable to Zion Station.

6.2.4 Containment Isolation System

6.2.4.1 Design Basis

In the unlikely event of a LOCA, the containment atmosphere will be isolated from the environment by the use of isolation valves and other barriers for all pipelines which penetrate the Containment, unless such lines are required for service during the accident. All lines for which isolation is required are provided with two barriers so that no single failure will prevent isolation. No manual operation is required for immediate isolation. Automatic isolation is initiated by a signal derived from the safety injection (SI) signal.

In lines where two automatic isolation valves are required, each valve operator will be actuated by an independent signal. In the case of motor-operated valves, each valve operator is supplied from a separate emergency power supply.

6.2.4.2 System Design

Penetrations have been divided into seven classes. The following notes are applicable to the classifications described in Section 6.2.4.2.1:

1. The "missile protected" designation refers to lines that are protected throughout their length inside the Containment against missiles generated as the result of a LOCA. These lines, therefore, are not vulnerable to rupture as a result of a LOCA.

2. In order to qualify for containment isolation, valves inside the Containment are located behind the missile barrier for protection against loss of function following an accident.

3. The double-disk type of gate valve is used to isolate certain lines. When sealed by water injection, this valve provides both barriers against leakage of radioactive liquids or containment atmosphere and is equivalent to two isolation valves in series.

4. In lines isolated by globe valves and provided with seal water injection, the valves are installed so that the seal water wets the stem packing.

5. Isolated lines between the Containment and the first outside isolation valve are designed to the same seismic criteria as the Containment vessel and are considered as an extension of the Containment.

6.2.4.2.1 Penetration Classifications

6.2.4.2.1.1 Class 1 - Outgoing Lines, Reactor Coolant System

Normally operating outgoing lines connecting to the Reactor Coolant System (RCS) are provided with at least two automatic trip valves in series located outside the Containment. Automatic seal water injection is provided for lines in this classification.

6.2.4.2.1.2 Class 2 - Outgoing Lines

Normally operating outgoing lines not connected to the RCS, and not missile-protected or which can otherwise communicate with the Containment atmosphere following an accident, are provided at a minimum with two automatic trip valves in series outside the Containment. Automatic seal water injection or penetration pressurization air is provided for lines in this classification which are not vital to plant operation following an accident. Manual seal water injection is provided for lines which remain in service for a time, or are used periodically, subsequent to an accident (see item 3 of Section 6.2.4.2).

6.2.4.2.1.3 Class 3 - Incoming Lines

1. Incoming lines connected to open systems outside the Containment which are not missile-protected, or which can otherwise communicate with the containment atmosphere following an accident, are provided with one of the following arrangements outside the Containment:

   a. Two automatic trip valves in series with automatic seal water injection. This arrangement is provided for lines which are not necessary to plant operation after an accident.

   b. Two manual isolation valves in series with manual seal water injection. This arrangement is provided for lines which remain in service for a time, or are used periodically, subsequent to an accident.

2. Incoming lines connected to closed systems outside the Containment, which are not missile protected or which can otherwise communicate with the containment atmosphere, are provided, at a minimum, with one check valve or normally closed isolation valve located either inside or outside the Containment. The closed piping system outside the Containment provides the necessary isolation redundancy. Most lines in this category are provided with additional isolation valves which satisfy particular systems or ESF requirements. Seal water injection is provided for certain lines in this category.

6.2.4.2.1.4 Class 4 - Missile Protected

Incoming and outgoing lines which penetrate the Containment are connected to closed systems inside the Containment, are protected from missiles throughout their length and are provided with at least one manual isolation valve located outside the Containment. The closed piping system inside the Containment provides the necessary isolation redundancy. Seal water injection is not used for this class of penetration.

6.2.4.2.1.5 Class 5 - Normally Closed Lines Penetrating the Containment

Lines which penetrate the Containment and can be opened to containment atmosphere, but which are normally closed during reactor operation, are provided with two isolation valves in series either inside or outside the Containment. In certain cases a blind flange or closed system outside the Containment is utilized as the second barrier in lieu of an isolation valve.

6.2.4.2.1.6 Class 6 - Special Service

The ventilation purge duct penetrations, the Containment access openings, and the fuel transfer tube are special cases.

Each ventilation purge duct penetration is provided with two butterfly valves which are closed automatically upon a containment isolation or a containment high radiation signal. One valve is located inside and one valve is located outside the Containment at each penetration. The space between the butterfly valves, in both the purge supply and purge exhaust lines, is continuously pressurized to greater than or equal to 47 psig by the Penetration Pressurization (PP) System.

The Containment access openings consist of the equipment access closure and two personnel air locks. The equipment access closure is a bolted, gasketed closure which is sealed during reactor operation. The personnel air locks consist of two doors in series with mechanical interlocks to ensure that one door is closed at all times. Each air lock door and the equipment closure are provided with double gaskets to permit pressurization between the gaskets by the PP System.

The fuel transfer tube penetration inside the Containment is designed to present a missile-protected and pressurized double barrier between the containment atmosphere and the atmosphere outside the Containment. The penetration closure is treated in a manner similar to the equipment access hatch. A positive pressure is maintained between these gaskets to complete the double barrier between the containment atmosphere and the inside of the fuel transfer tube. The interior of the fuel transfer tube is not pressurized. Seal water injection is not used for this penetration.

6.2.4.2.1.7 Class 7 - Lines Required for Postaccident Service

Lines which are required for postaccident service have power-operated valves which are either normally open and must remain open during an accident or are normally closed and must be opened should an accident occur. For such lines, a minimum of one valve outside the Containment is provided for containment isolation when the system is no longer required.

6.2.4.3 System Operation and Surveillance

Automatic containment isolation is accomplished in two phases:

1. Phase A

   All automatic containment isolation (CI) valves, with the exception of the reactor coolant pump (RCP) cooling water line valves, are closed on an SI signal.

2. Phase B

   The RCP cooling water line valves are closed on a signal which is derived from high-high containment pressure.

Table 16.3-16 provides a list of containment isolation valves.

All automatic CI valves can be manually closed from the Control Room. Air-operated valves fail closed in the event of loss of air or loss of power. Position indication lights for all automatic CI valves are provided at the control board.

Power-operated isolation valves which are not closed automatically are operable from the Control Room. Control board position indication is also provided.

6.2.4.4 Isolation Valve Seal Water System

6.2.4.4.1 Design Basis

The Isolation Valve Seal Water (IVSW) System assures the effectiveness of certain CI valves, during any condition which requires containment isolation, by providing a water seal at the valves. These valves are located in lines that could be exposed to the containment atmosphere in the event of a LOCA. The system provides a simple and reliable means for injecting seal water between the seats and stem packing of globe and double-disk type isolation valves and into the piping between other types of valves (See Figure 6.2-5).

6.2.4.4.2 Design Criteria

Isolation and seal water injection are accomplished automatically for certain penetrating lines requiring early isolation and manually for others, depending on the status of the system being isolated and the potential for leakage in each case.

Automatic isolation and automatic seal water injection are used for lines which are connected to the RCS or that could communicate with the containment atmosphere and could be void of water immediately following a LOCA. These lines include:

1. RCP seal water return line;

2. Letdown line;

3. RCS sample lines; and

4. Service air.

Automatic isolation and automatic seal water injection are also provided for the following lines, which are not connected directly to the RCS, but terminate inside the Containment at certain components. These components can be exposed to the reactor coolant or containment atmosphere as the result of leakage or failure of a related line or component. The isolated lines are not required for postaccident service.

1. Pressurizer relief tank (PRT) gas analyzer line

2. PRT makeup line

3. Reactor coolant drain tank (RCDT) pump discharge line

4. Accumulator sample line

5. RCDT vent header

6. RCDT gas analyzer line

Manual isolation and manual seal water injection are provided for lines that are normally filled with water and will remain filled following a LOCA and for lines that must remain in service for a time following the accident. The manual seal water injection assures a long term seal. These lines include:

1. RCP cooling water supply and return lines;

2. RCP seal water supply lines; and

3. Charging line.

Seal water injection is not used to ensure the integrity of isolated lines in the following categories:

1. Lines that are connected to nonradioactive systems outside the Containment and in which a pressure gradient exists which opposes leakage from the Containment. These include the instrument air header, the weld channel pressurization air lines, and the nitrogen supply lines to the PRT, accumulators, and RCDT.

2. Lines that do not communicate with the RCS and are missile-protected throughout their length inside Containment. These lines are not postulated to be severed or otherwise opened to the containment atmosphere as a result of a LOCA. These include the steam and feedwater headers and the cooling water supply and return lines for the RCFC units and excess letdown heat exchangers.

3. Lines that are designed for postaccident service as part of the ESF. These include the SI line, containment spray headers, residual heat removal (RHR) pump suction and discharge lines, and the containment sump recirculation line. These lines are connected to closed systems outside Containment.

4. Special lines - fuel transfer tube and containment purge ducts. The zone between the two gaskets sealing the blind flange to the inner end of the fuel transfer tube is pressurized to prevent leakage from the Containment in the event of an accident. The zone between the two butterfly valves in each containment purge duct is pressurized above accident pressure while the valves are closed during power operation.

6.2.4.4.3 <u>System Design</u>

The IVSW System interposes water inside the penetrating line between two isolation points located outside the Containment. The water is introduced at a pressure of at least 52 psig which is 1.1 times the containment postaccident design pressure. The system is capable of maintaining this pressure for at least 30 days. The possibility of leakage from the Containment or RCS past the first isolation point is thus prevented by assuring that if leakage does exist, it will be from the IVSW System into the Containment.

The system includes one 160-gallon seal water tank for each unit which is capable of supplying the total requirements of the system. The tank is filled with water from the Primary Makeup Water System and pressurized with air or nitrogen. The tank is normally pressurized by the PP System; with backup pressurization provided by the Nitrogen System. If the pressure

decreases below 70 psig, the Standby Nitrogen System, which does not require any external power source, can be manually valved in and will maintain the required driving pressure on the seal water tank. With a loss of offsite power, the PP System compressors receive their electric supply from the essential service buses. A self-actuated pressure control valve maintains a preset supply pressure to the tank. Local pressure indication and a low pressure alarm in the Control Room are provided for the IVSW tank.

Water level in the IVSW tank is controlled by a pneumatic level controller which feeds primary water to the tank. A separate redundant pneumatic level controller is provided to feed service water to the tank in emergency situations. A low level alarm for the tank is provided in the Control Room; level indication is provided locally. The nitrogen, air, and makeup water lines for the tank on each unit can be isolated from the other unit by the operation of manual valves.

The IVSW Piping Distribution System consists of a main header with branch headers. One branch header contains the supply lines to all injection points that are manually actuated. The automatically actuated injection points are supplied from the other headers with all the systems supplied from one header being either radioactive or nonradioactive and having the same design pressure.

The automatic injection headers have a pair of solenoid, air-operated injection valves which will be automatically opened by the CI signal. Two valves in parallel are provided to ensure the opening of at least one if there is a failure of the other. Each of the two solenoid, air-operated valves in each branch are actuated from separate and independent signals. Local pressure indication is provided downstream of each pair of injection valves. Hand switches and position lights are provided in the Control Room to monitor and control the valves if necessary. Each manual injection supply line contains two manual valves and a check valve.

Each supply line to the individual injection points contains a manual shutoff valve at the injection point and a check valve. The piping system from the tank to the header automatic injection valves and to the manual injection valves is designed for 150 psig. This tank and piping are protected by a relief valve on the tank and an overpressure regulator which will bleed off any excess pressure that could occur if one of the injection valves leaks when the unit is operating. The injection valves and the piping downstream of the injection valves are designed for the design pressure and design temperature of the systems into which the seal water is being injected.

Reliable operation is assured by periodic testing of CI valves. Each automatic isolation valve can be tested for operability at times when the line is not required for normal service. Lines supplying automatic seal water injection can be similarly tested. The capacity of the system to

deliver water in accordance with the design was verified during the preoperational test period of plant construction and startup.

Table 6.2-4 is a list of lines penetrating Containment and the isolation methods employed, classification per Section 6.2.4.2.1, and the type of seal water injection, if applicable. Table 16.3-14 lists the IVSW System components associated with the Technical Specifications.

6.2.4.5 Containment Penetration and Weld Channel Pressurization System

6.2.4.5.1 Design Basis

The function of the PP System is to prevent leakage of containment air through penetrations and liner welds under all conditions by supplying air above the containment postaccident design pressure to the positive pressure zones incorporated in the penetration and weld channel design.

This system also provides a sensitive and accurate means of continuously monitoring the leakage status of the Containment.

6.2.4.5.2 System Operation

The PP System is shown on Figure 6.2-6. The system utilizes a regulated supply of clean and dry compressed air, normally taken from the Instrument Air (IA) System, to maintain pressure in all penetrations and weld channels whenever plant operating conditions require the Containment to be closed. The penetrations and weld channels are grouped in four independent zones; each is supplied by its own air receiver.

The air for the PP System is normally supplied from the IA System through filters and dryers. The instrument air is supplied by two 527 cfm, 110 psig air compressors, and one compressor which cycles between 104 psig and 112 psig with an average free air supply of 1050 cfm. The 1050 cfm compressor is normally the lead compressor with the two 527 cfm compressors operating in standby. These air compressors are not Seismic Class I and do not receive their power from the essential buses. In the event that these compressors are lost due to an earthquake or loss of offsite power, three 97 cfm, 105 psig PP air compressors will automatically start upon a decrease in the header pressure and will supply air directly to the PP System. Double check valves are provided in the IA lines normally supplying the air to the PP System to prevent the air from the Seismic Class I supply leaking back into the IA System.

The PP air compressors are Seismic Class I and each compressor is sized to provide several times the maximum allowable leakage from the pressurization systems on both units. The compressors discharge into a common header. Isolation valves are provided so that one compressor can be valved to supply its associated unit with the third compressor being capable of supplying either unit. Normally, the three compressors are aligned to discharge into a common header so that each compressor can supply either

unit. The compressors can be manually controlled from the Control Room or from a local panel. The following compressor interlocks are provided:

1. Low lube oil pressure cutout;
2. High air temperature compressor cutout;
3. Pressure switch which automatically starts the unit compressor on low penetration air receiver inlet pressure; and
4. Pressure switch which automatically starts the common compressor on low penetration air receiver inlet pressure, which is indicative of a unit compressor failure.

The discharge from the compressors is filtered and dried before it connects with the IA supply to the PP System. The filters and dryers are provided with a bypass to allow operation of the PP air compressors in the event of a filter dryer failure. The air dryers are provided with local indication of pressure and dew point. A high dew point alarm is also locally and remotely provided.

The PP System for each unit is divided into four zones, with each zone having its own air receiver and its own standby source of nitrogen. Air from the IA System or the PP air compressors will keep the air receiver in each zone charged to approximately 100 psig. Air receiver inlet pressure is provided in the Control Room for each Containment. Local pressure indication is provided for each receiver. Low compressor discharge pressure switches actuate the control room annunciator. If both of these sources of air are lost, then the air receivers themselves will be able to supply air to the penetrations for four hours at the rate of 117 cfh, which is the maximum allowable leakage rate of 0.1% of the containment volume per day, while the air receivers are being drawn down from 100 psig to 50 psig.

The pressurization air to each zone is reduced in pressure to 47 to 52 psig after it leaves the air receiver. Each of the four pressurization zones downstream of the reducing stations contains a pressure transmitter and a flow transmitter which provides a signal to pen recorders on the main control board. Bistable alarms actuate the control room annunciator on high or low pressure or high flow to any zone. Local pressure indication is also provided for each zone.

If the air in the air receivers is reduced in pressure to below 47 psig, then the Standby Nitrogen System is available to supply nitrogen to the zone whose air receiver is below 47 psig. The Standby Nitrogen System will provide nitrogen for 24 hours at 47 psig at the rate of 117 cfh which is equivalent to the maximum allowable leakage rate of 0.1% of the containment volume per day. All of these sources of pressure will maintain the weld channels and penetrations at a pressure higher than the postaccident design pressure for a time period far in excess of the peak pressure period. Therefore, there will be no out leakage of containment atmosphere from the Containment.

During normal operation, leakage from the PP System will be monitored by measuring and recording the air flow and pressure to each of the four zones in the Containment.

The exact location of a leak can be further pinpointed by checking the flows to the various penetrations and weld channels. Each zone is divided into nine or ten stations and approximately ten weld channels or penetrations are supplied from each station. A flow indicator is located in the supply to each station and these can be checked to determine the leakage through each station. By isolating the various weld channel and penetration supply lines coming from each station, an individual leak can be located.

The supply to each zone downstream of the PP air and the nitrogen pressure regulator is protected by a relief valve set at 53 psig and a rupture disk designed for 60 psig. The PP air compressors, the air receivers, the air and nitrogen regulators, the nitrogen bottles, the relief valves and rupture discs, and the flow and pressure recorders are all located outside of the Containment. Each of the forty penetration branches contains a local variable-area flow indicator for measuring air flow to the Containment. The station flow indicators and the individual isolation valves are located in the Containment in an accessible location.

In addition to the weld channels and the penetrations, the following gasketed or valved openings in the Containment will be pressurized from this system:

1. The double-gasketed space on each hatch of the personnel air lock;

2. The double-gasketed space on the interior hatch of the escape hatch;

3. The double-gasketed space on the equipment removal hatch flange; and

4. The space between the inner and outer pipe of the fuel transfer tube between the blanking flange and the isolation valve.

The electrical penetrations are pressurized from the Nitrogen System which backs up the PP System. The electrical penetration nitrogen is also backed up by penetration air. The following instrumentation is provided:

1. Local indicating flow switches are provided for each of the four electrical penetration zones. High flow signals initiate the control room annunciator. Meter bodies meet Class I barrier requirements.
2. Each zone has a high and low pressure alarm switch for initiation of the control room annunciator.
3. Local pressure indication is provided for each zone.
4. Seismic Class I pressure reducing stations are provided for each zone for regulation of bulk nitrogen, cylinder nitrogen, and backup air.

The PP System includes sufficient redundancy and is in compliance with the single failure criteria. PP System components are listed in Table 16.3-15.

In the event of continuous leakage into the Containment from the PP System, the Pressure and Vacuum Relief System will be used to keep the Containment pressure below the containment high pressure alarm setpoint of +15 inches H_2O.

6.2.4.6 Containment Penetrations

6.2.4.6.1 General

All containment penetrations (both electrical and piping) are double-barrier assemblies consisting of a closed sleeve, in most cases, or a double-gasketed closure for special penetrations such as the fuel transfer tube. The space between the double barriers will be continuously pressurized by the PP System to a pressure in excess of the containment design pressure.

All containment penetrations are designed Seismic Class I and are protected by structures that are designed to withstand the effect of tornado and tornado generated missiles.

6.2.4.6.2 Electrical Penetrations

Electrical penetration assemblies from Conax Buffalo Corporation and D.G. O'Brien, Incorporated, are used to extend electrical conductors through the containment structure penetration nozzles while providing a pressure barrier between the inside and outside of the containment structure. The D.G. O'Brien electrical penetrations are described in Subsection 6.2.4.6.2.1. The Conax Buffalo electrical penetration assemblies are described in Subsection 6.2.4.6.2.2.

6.2.4.6.2.1 D.G. O'Brien Electrical Penetrations

The D.G. O'Brien electrical penetration assemblies are designed, fabricated, tested, and installed in accordance with the requirements of the "IEEE Proposed Standard for Electrical Penetration Assemblies in Containment Structures for Nuclear Fueled Power Generating Stations", dated April 1970. Figure 3.8-2(1) shows a typical D.G. O'Brien electrical penetration assembly in place within a containment penetration nozzle. Hermetic seals between each conductor and the metallic canister end header plates are obtained by the use of high strength/temperature glass and ceramic materials.

There are five types of D.G. O'Brien electrical penetration assemblies classified by service and application as follows:

1. Type 1 - Medium voltage power service, rated 5 kV;
2. Type 2 - Low voltage power service, rated 600 V;
3. Type 3 - Control service, rated 600 V;
4. Type 4 - Shielded instrumentation service, rated 600 V; and
5. Type 5 - Triaxial instrumentation cable service.

Type 1 (medium voltage power service) penetration assemblies are used to extend power at 4160 V to the RCP motors. The design of the penetration canister body and its attachment to the containment nozzle is identical to that shown in Figure 3.8-2(1). The method of conductor insulation through the

canister end header plates differs in that fully insulated rigid ceramic bushings are provided for each of the phase conductors for the Type 1 penetration.

Type 2 (low voltage power service) penetrations are used to extend power through Containment for various systems equipment which includes the reactor control rod drive mechanisms, reactor pressurizer heaters, motor-operated valves, lighting systems, overhead crane, and the RCFCs.

Those penetrations associated with ESF within the Containment are fully rated for both normal and post-LOCA operation. The ratings of all penetrations have been verified through extensive prototype testing by the manufacturer.

Type 3 (control service) penetrations are used to extend control circuits at 120 Vac and 125 Vdc through Containment. Typically, this includes motor- and air-operated valve limit and position indication circuits, control valve solenoid control, and in general, all low voltage low-power circuit requirements. The penetration assembly construction is represented by Figure 3.8-2(1).

Those penetrations associated with ESF within the Containment are fully rated for both normal and post-LOCA operation. The ratings of all penetrations have been verified through extensive prototype testing by the manufacturer.

Type 4 (shielded instrumentation service) penetrations are used to extend process system transmitter outputs through Containment to process control equipment. In addition to shielded copper conductors, the penetrations are furnished with a sufficient quantity of chromel-constantan conductors for extension of the various pump and motor bearing temperature and ventilation system temperature signals through Containment to monitoring and control equipment within the Control Room complex. The penetration assembly construction is represented by Figure 3.8-2(1). The circuit shield is extended separately through the penetration assembly for each shielded pair and quad cable.

Those penetrations associated with ESF within the Containment are fully rated for both normal and post-LOCA operation. The ratings of all penetrations have been verified through extensive prototype testing by the manufacturer.

Type 5 (triaxial instrumentation cable service) penetrations are used exclusively for the Reactor Instrumentation System; i.e., the excore Neutron Monitoring System and the Movable Incore (flux mapping) System detector output signals. The D.G. O'Brien Electrical Penetrations and Conax Buffalo Electrical Penetration are shown in Figure 3.8-2(1) and 3.8-2(2) respectively. The penetration design differs from Figure 3.8-2(1) in that special hermetically sealed triaxial cable connectors which form an integral part of the penetration end header plates are provided. The

internal penetration conductors are continuous; i.e., no cable connectors are within the canister body.

Physical separation and electrical isolation between ESF systems circuits (RCFCs) and the reactor protection channels (Nuclear Instrumentation System) circuits are maintained at the penetration areas.

6.2.4.6.2.2 Conax Buffalo Electrical Penetration Assemblies

The Conax Buffalo containment electrical penetration assemblies (See Figure 3.8-2(2)) are used for instrumentation service. This service includes the neutron flux monitoring system utilized for Regulatory Guide 1.97 conformance. These penetration assemblies are classified as Safety Related, Class 1E, Seismic Category I, Quality Group Not Applicable (NA) components and conform to the requirements of IEEE-317-1983, Standard for Electrical Penetration Assemblies in Containment Structures for Nuclear Power Generating Stations, and the ASME Boiler and Pressure Vessel Code, Section III, Division 1, Subsection NE, Class MC, 1989 Edition and 1989 Addenda.

Each penetration assembly consists of end header plates, internal conductor support assembly, extension tubes, a leak chase channel, a containment end enclosure and uses the existing penetration pipe sleeve.

Each of the end header plates is welded to a carbon steel schedule 80 extension tube which is welded to the existing containment liner and the schedule 40 pipe sleeve penetrating the containment wall.

Inside containment, a leak chase channel is welded to the end header plate and to the containment liner to form a volume that can be pressurized for local leak rate tests. A stainless steel enclosure assembly, with removable covers and baffled drain holes on the bottom cover, is mounted on the end header plate inside containment.

6.2.4.6.3 Piping Penetrations

Double-barrier piping penetrations are provided for all piping which passes through the Containment as shown in Figure 3.8-3. The pipe is contained in a sleeve which is welded to the liner. Closure heads are welded to the sleeve and the pipe both inside and outside the Containment to form the double barriers. As stated in Section 6.2.4.6.1, the annulus between the pipe and sleeve is continuously pressurized by the PP System. Several pipes may pass through the same sleeve to minimize the number of penetrations required. In such cases, each pipe is welded to both closure heads.

Penetrations for main steam, feedwater, and steam generator blowdown are anchored outside the Containment in such a way to assure containment integrity should any one of these lines rupture. These penetrations are

provided with a bellows expansion joint on both the outside and inside of the Containment to allow for differential movement between the containment wall and the anchor. The inside joint will also take the differential movement of the hot pipe relative to the liner. The expansion joints have been designed so that, in the event of a pipe rupture within the sleeve, the inside joint will subsequently rupture and the outside joint will remain intact, thereby maintaining containment integrity.

Other hot penetrations which are not anchored outside the Containment for pipe rupture are, where required, provided with a single expansion joint, either inside or outside the Containment, to allow for thermal movement of the pipe relative to the anchor.

All expansion bellows have been designed to account for movement due to thermal expansion and contraction of the pipe and for building movement as a result of prestressing, creep, shrinkage, accident pressure, and seismic motion.

Piping penetrations which form a part of the containment secondary pressure barrier are located in an accessible area immediately inside or outside the Containment.

All containment penetrations are designed as Seismic Class I. Where external anchors have not been provided for pipe rupture, the pipes themselves are restrained both inside and outside the containment, so the penetrations will continue to provide containment integrity in the event of

a maximum credible earthquake. The seismic restraints allow normal pipe movement and building movement.

Normal pipeline operating temperatures have determined the need for insulation and external cooling. Should the normal operating temperature of a line be equal to or greater than 150°F, cooling water will be continuously circulated through coils located inside the penetration sleeves. Flow rates are sufficient to assure that the concrete temperature remains below 150°F. For assemblies where cooling water is used, metallic insulation will be provided. Calcium silicate will be used as insulation on certain penetrations where cooling water is not required.

6.2.4.6.4 Equipment and Personnel Access Hatches

An equipment hatch is provided as shown on Figure 3.8-5, which is fabricated from welded steel and furnished with a double-gasketed flange and bolted, dished door. Equipment up to and including the size of the reactor vessel O-ring seal can be transferred into and out of Containment via this hatch. The hatch barrel is welded to the liner. Provision is made to test pressurize the space between the double gaskets of the door flanges and the weld seam channels at the liner joint, hatch flanges, and dished door.

Two personnel locks are provided. One of these is for normal access and penetrates the dished door of the equipment hatch. The other is an emergency escape hatch placed on the side opposite the Containment at grade level. Each personnel lock is a double door, hydraulically-latched, welded steel assembly as shown in Figure 3.8-5. A quick-acting type equalizing valve connects the personnel lock with the interior of the containment vessel for the purpose of equalizing pressure in the two systems when entering or leaving the Containment.

The two doors in each personnel lock are interlocked to prevent both being opened simultaneously and to ensure that one door is completely closed before the opposite door can be opened. An emergency lighting and communication system operating from an external emergency supply is provided in the lock interior. The exterior emergency escape hatch door opens to a vestibule with a security door. Operation of the security door is monitored at the security control centers.

6.2.4.6.5 Special Penetrations

6.2.4.6.5.1 Fuel Transfer Penetrations

A fuel transfer penetration is provided (see Figure 6.2-7) for fuel movements between the refueling transfer canal in the Reactor Containment and the spent fuel pool. The penetration consists of a 20-inch pipe inside a 24-inch sleeve. The inner pipe acts as the transfer tube and is fitted

with a double-gasketed blind flange in the refueling canal. A seal plate is welded to the containment liner and also to the inside tube. This seal plate and the blind flange act as the containment boundary.

Bellows expansion joints have been provided at the sleeve diameter. These joints, which are welded to the sleeve and connected to the tube by welding to end plates, provide for normal and seismic differential building movements. The sleeve and expansion joints also serve to cover most of the welds on the tube inside the Containment. The annulus between the sleeve and tube is continuously pressurized to demonstrate containment integrity. The short length of tube between the containment end plate and the blind flange, which is not covered by the sleeve, has its welds covered by a channel. Pressurization is supplied inside the channel.

The innermost joint as shown on Figure 6.2-7 can be inspected during reactor shutdown by lowering personnel from the operating floor, while the second joint can easily be reached during operation from El 568'. The two outer bellows are not readily inspectable but neither form part of the containment boundary.

6.2.4.6.5.2 Sump Penetrations

Lines originating from the containment recirculation sumps penetrate the Containment through the slab below the containment walls. In this case, the pipe is contained in a sleeve which is buried in the slab. Both sleeve and pipe extend into the sump, where the sleeve is seal welded to both the pipe and the sump liner. The sleeve-to-liner weld is covered by a channel for continuous pressurization.

The sleeve and pipe also extend outside the Containment to an isolation valve which is completely enclosed in the valve enclosure assembly. The sleeve terminates at the entrance to the enclosure assembly where it is welded to the enclosure assembly. At the outlet of the enclosure assembly, the pipe is seal-welded to the enclosure assembly through an expansion joint which takes up the thermal expansion of the pipe.

The recirculation sump penetrations each have a minimum of one boundary, which is permitted for a Class 7 penetration. The boundary is the weld between the recirculation line and sleeve in the recirculation sump. This boundary is tested in Type A tests. The purpose of the valve enclosure assembly is to detect passive failures external to Containment and to control any subsequent water leakage. Leakage will be minimized such that a passive failure on one train will not render the sump and consequently the remaining RHR train inoperable. No special leak tests are required on the enclosure assemblies since they were not added to aid in the isolation of Containment and, therefore, are not considered containment boundaries. The valve enclosure is covered by ASME Section XI IWA 5243 testing requirements; therefore, a VT-2 examination will be performed following maintenance.

6.2.4.6.6 Penetration Design

6.2.4.6.6.1 Criteria

The Conax Buffalo electrical penetration assemblies conform to applicable sections of ASME Boiler and Pressure Vessel Code, Section III, Division 1, Subsection NE, Class MC, 1989 Edition and 1989 Addenda. All other penetrations conform to the applicable sections of American Standards Association (ASA) N6.2-1965, "Safety Standard for the Design, Fabrication and Maintenance of Steel Containment Structures for Stationary Nuclear Power Reactors." All penetrations which extend beyond the concrete shell conform to the requirements of Section III of the ASME Boiler and Pressure Vessel (B&PV) Code. Personnel locks and any portion of the equipment access door extending beyond the concrete conform in all respects to the requirements of paragraph N-1211, Sec. III, of ASME B&PV Code.

6.2.4.6.6.2 Materials

Materials for all penetrations are in accordance with Section III of the ASME B&PV Code. The Conax Buffalo electrical penetration assemblies have carbon steel material with a Charpy V-notch test temperature of 0°F. On all other penetrations, the carbon steel materials used meet the necessary Charpy V-notch impact values at a temperature 30°F below the lowest service temperature for the particular penetration.

The penetration nozzles to accommodate the electrical penetration assemblies consist of suitably sized, Schedule 40 carbon steel pipe. The penetration assemblies are field-welded by the use of weld rings to the penetration nozzles. All electrical penetration assembly weld seams which form the pressure-retaining boundary of the Containment are continuously pressurized with dry nitrogen to 49 psig.

Materials for Piping, Electrical, and Access Penetrations are listed in Table 6.2-5.

6.2.4.6.7 Leak-Testing of Penetration Assemblies

Leak-testing procedures were conducted in accordance with Appendix J of 10CFR50.

A construction proof test was applied to each penetration which pressurized the necessary areas to 54 psig. The pressure was maintained a sufficient time to allow soap bubble and Freon sniff tests of all welds and mating surfaces. Any leaks found were repaired and retested, and this procedure was repeated until no leaks existed.

6.2.4.6.8 Construction

The qualification of welding procedures and welders was in accordance with Section III of the ASME B&PV Code. The repair of defective welds was in accordance with paragraph N-528 of Section III of the B&PV Code.

For the Conax Buffalo electrical penetration assemblies, the following requirements apply: The qualification of welding procedures used and the qualifications of welders and welding operators comply with the requirements of the ASME Boiler and Pressure Vessel Code, Section IX and other governing codes. Nondestructive examination is in accordance with the examination procedures of Section V of the above code and is performed by qualified personnel. Nondestructive examination is performed as required by the governing codes and/or ASTM/ASME material specification. Welds made in structures and supports designed and fabricated to the requirements of AISC and AWS D1.1 and later welded in accordance with AWS D1.1 are visually inspected in accordance with NCIG-01 instead of AWS D1.1. Welds made using AWS D1.3 procedures meet the inspection requirements of AWS D1.3.

6.2.4.6.9 Pressurization of Penetrations and Weld Seams

All welded joints in the steel liner have steel channels welded over them on the inside of the lines. These welds are pressurized continuously at 49 psig.

The design leak rate of the pressurized penetrations is such that it will not exceed 0.1% of the total free containment volume in 24 hours.

6.2.4.6.10 Accessibility Criteria

Access to the Containment during normal operation is limited and will be controlled in compliance with the limits set forth on 10CFR20.

6.2.5 Combustible Gas Control in Containment

Hydrogen control system components associated with the Technical Specifications are listed in Table 16.3-13.

6.2.5.1 Recombiner

The Hydrogen Recombiner System employed at Zion is the licensing basis for combustible gas control inside Containment during a LOCA. This system removes the hydrogen and oxygen gases that accumulate in the containment atmosphere following a LOCA. This system consists of two portable skid

mounted electric recombiners, one acting as a backup for the other. The Hydrogen Control Purge System provides an additional backup to the redundant external recombiners. In the event of a LOCA, one recombiner is connected outside the affected Containment with no vent to the atmosphere.

A quality assurance manual that applies from initial design through shipment of components has been reviewed and approved. Design review, drawing checking, and design documentation are examples of quality assurance functions performed. Each recombiner is packaged on two separate welded metal skids, one containing the recombination equipment and the other containing the instrumentation, power control equipment, and the interconnection cables. The skid containing the recombination equipment is pictured in Figure 6.2-8.

In the event of a LOCA, one recombiner unit would be moved into place on the floor of the Auxiliary Building at El 617′ as shown in Figure 6.2-9. The recombiner will be moved by the 125-ton crane in the Auxiliary Building.

After the unit is in place, installation is accomplished by connecting the permanently installed inlet and outlet flanges from the Containment to their respective flanges on the recombiner package and plugging in the station signal and power cables to the control package. The hydrogen recombiner, as installed in the Containment Ventilation System, is shown in Figure 6.2-10.

The recombiner system is illustrated by the piping and instrumentation diagram, Figure 6.2-11. The process gas is drawn from the Containment into the recombiner by a blower with the flow fixed at 50 scfm or more from the Containment. The gas flows from the blower to the tube side of an economizer where it reaches a temperature of about 700°F. The gas then flows into an electric heater where it is heated to a preselected, automatically controlled temperature of 1100° to 1300°F. As the gas leaves the heater, it enters the reaction chamber where, at the temperatures present, the hydrogen reacts with the oxygen in the process gas. The exothermic reaction raises the gas temperature in direct proportion to the hydrogen concentration. As the gas exiting from the reaction chamber reaches 1300°F, the heater power is automatically reduced. When the hydrogen concentration reaches 3.5%, the heater exit temperature is reduced to about 900°F. If the reaction gas chamber temperature were to reach 1400°F, the heaters would shutoff automatically until the overtemperature was corrected. From the reaction chamber, the gas travels through the economizer and back into the Containment after it passes through a service water aftercooler in the discharge piping.

At the rated flow, the recombiner has the following ratios of uncombined hydrogen in effluent to uncombined hydrogen in the feed:

3% hydrogen in feed	less than 1/30
2% hydrogen in feed	less than 1/20
1% hydrogen in feed	less than 1/10

All of the above ratios are equivalent to less than 0.1% H_2 in the effluent.

The electrical wiring between the heater and terminal box and the blower motor and terminal box will be in rigid conduit with sealable fittings. Electrical power at 480 V, 3 phase, 60 hz is supplied to the recombiner. A transformer provides 120 Vac for the control panel.

The material used to fabricate the economizer, reaction chamber, heating elements, and piping internal to the recombiner package is Incoloy 800, annealed Grade 2. These components are fully encased in insulation with a painted plate steel outside shell. The support structure for the component is 310 stainless steel. The heaters do not come in contact with the gas, but they radiate to the pipe containing the gas and may be removed without disturbing the gas piping. There are 9 ($3^1/_2$ kW) electric first-stage heaters and 6 (1 kW) second-stage heaters.

The system is operated by opening the valves which isolate the recombiner system from the Containment and energizing the interlock or prestart switches. After all interlocks are satisfied, the manual actuation of start switches would energize the blower and heater. After this, the system comes up to temperature and operates automatically.

The recombiner has demonstrated that it can operate satisfactorily in a full-scale test at the Atomic International facilities near Canoga Park, California. The test report is included as Appendix 6A. This test included injecting hydrogen into the inlet and measuring the H_2 concentration in the heater inlet, heater exit, and reaction chamber exit gases. The same test facilities which were used for demonstration tests were used to test the two purchased recombination systems in a full flow and temperature test. Since a full-scale test has already demonstrated recombination, only a proof test, using no hydrogen, was performed prior to shipment.

Biannual checks will be made to assure continuity of heater elements and that switches, indicators, and annunciators are in proper working order. No hydrogen will be injected during these tests. If the heaters will bring the system to the proper temperature and the blower will work, then the recombiner will work.

6.2.5.2 Containment Hydrogen Monitoring System

The containment is monitored by a continuous Hydrogen Concentration Monitoring System. The system provides indication in the Control Room of

the containment hydrogen concentration. For further information on this subject, refer to Section 7.5.1.3.3.

6.2.6 Containment Leakage Testing

The Containment Leakage Testing Program complies with the requirements of 10CFR50, Appendix J, although the NRC has granted certain exceptions (see Reference 4). The Technical Specifications contain more details concerning this program.

Pneumatic leak tests are periodically performed on all CI valves in lines which are potential air leakage paths. Valves which, under postaccident containment isolation conditions, are expected to be maintained continually at a pressure equal to or greater than 1.1 times the containment peak accident pressure are not tested. Valves sealed with qualified seal water systems are also not tested.

By performing periodic leak tests on all but those valves mentioned above, the leaktightness of all valves which may be required to remain shut against peak containment pressure is demonstrated.

6.2.7 References, Section 6.2

1. WCAP-9003, C. V. Fields, "Fan Cooler Motor Unit Development and Test," WNES Proprietary Class 2.

2. WCAP-7343-L, "Topical Report - Reactor Containment Fan Cooler Motor Insulation Irradiation Testing," July 1969, WNES Proprietary Class 2.

3. TID 14844, Atomic Energy Commission Report, Calculation of Distance Factors for Power and Test Reactor Sites, March 23, 1962.

4. Correspondence from D.G. Eisenhut (NRC) to L.O. DelGeorge (CECo), dated September 30, 1981.

TABLE 6.2-1 (1 of 3)

RCFC DESIGN CHARACTERISTICS

1. Fan

Number of fans *	5
Fan type	Centrifugal
Bearing monitors	Vibration and temperature
Fan housing drain diameter (in.)	2
Flow adjustment mechanism	Inlet vane control

	Normal Mode Operation	Accident Mode Operation
Speed (rpm)	1200	900
Capacity (cfm)	85,000	53,000
Static pressure at .075 lb/ft^3 air density (in. wg.)	8	6.3
Containment atmosphere pressure (psig)	0	47
Containment atmosphere temperature (°F)	120	271
Containment atmosphere density (lb/ft^3)	0.0728	0.175
Brake horsepower at specified conditions	151	150.5
Max. fan brake horsepower	178	171

2. Motor

Number	5
Type	480 V, 3-phase, 60Hz, two speed
Bearing monitors	Vibration and temperature
Winding monitors	RTDs
Service factor	1.0
Heat Exchanger cooling media	Service water

	High Speed	Low Speed
Speed (rpm)	1200	900
Horsepower	200	200
Containment atmosphere temperature (°F)	120	271
Containment atmosphere pressure (psig)	0	47
Containment atmosphere density (lb/ft^3)	0.0728	0.175
Cooling water flow (gpm)	50	50
Cooling water temperature (°F)	78	80
Maximum allowable cooling water pressure loss (psi)	1.5	1.5

*Per containment

TABLE 6.2-1 (2 of 3)

RCFC DESIGN CHARACTERISTICS

3. Cooling Coil Assembly

Number	5
Type	Plate finned
Tube material	AL6X stainless
Fin material	Copper
Fins per inch	8.5
Tube thickness (in.)	0.035
Fin thickness (in.)	0.008
Tube nominal OD (in.)	5/8
Tube length (in.)	114
Vertical drain pan spacing (ft)	3.25
Pan drain diameter (in.)	2
Assembly drain diameter (in.)	8
Drain type (sch)	10
Assembly frame material	Stainless steel
Drain pan material	Stainless steel
Accident transient differential pressure loading on coil face (psi)	0.05
Total tube inside area per assembly(ft^2)	2149

	Normal Operation	Accident Operation
Heat removal (Btu/hr)	3.9×10^6	120×10^6
Steam-air flow (cfm)	87,500	66,000
Steam-air inlet temperature (°F)	120	271
Steam-air outlet temperature (°F)	78	262
Total pressure (psig)	0	47
Air density (lb/ft^3)	0.075	0.0708
Steam density (lb/ft^3)	0	0.1012
Condensate rate (gpm)	0	254
Static pressure drop at operating conditions (in. wg.)	2.2	3.43
Cooling water flow (gpm)	2200	2200*
Cooling water inlet temperature (°F)	78	80
Cooling water outlet temperature (°F)	81	189
Water pressure drop (ft)	11.4	10.3
Coil tube side fouling factor	0.0015	0.0015

* LOCA containment response analysis presented in Appendix 15D assumes 1500 gpm cooling water flow to bound the design value and minimum flow required by the Technical Specifications.

TABLE 6.2-1 (3 of 3)

RCFC DESIGN CHARACTERISTICS

4. Backdraft Dampers

	Normal Operation	Accident Operation
Maximum Back Pressure Across Damper	5" WG	12 psi
Operating Time		70 Milliseconds
Gas Density	0.068 lb/ft^3	0.175 lb/ft^3
Damper Size Inside Frame	47-1/2" wide x 63-7/8" high	47-1/2" wide x 63-7/8" high
Operator Type		Counter Balanced Failsafe Closed
Maximum Flow	87,500 CFM	

5. Housing Relief Dampers

Inside Frame Dimensions (in.)	30" x 30"	
	Enclosure Module B	Enclosure Module A
Vent Area (ft^2) - Full Open	4.25	4.25
Maximum Pressure Across Door Required to Begin Door Opening	4" H_2O	4" H_2O
Differential Pressure (psig)	3-1/2	3-1/2
Temperature (Normal)	120°F	120°F
Temperature (Incident)	271°F	271°F
Material	C.C. painted with corrosion resistant paint	

TABLE 6.2-2

MOTOR AND FAN BEARING LUBRICANT IRRADIATION TESTING

	Micro-Cone Penetration				
Sample	Unworked	60 Strokes	500 Strokes	1000 Strokes	50,000 Strokes
Unirradiated	308	320	368	370	400
Irradiated 1.2×10^8R	300	300	308	324	400
Irradiated 1.5×10^8R	308	288	292	298	364
Irradiated 1.8×10^8R	340	320	304	296	280

Based on the test results from irradiation and ASTM Micro-Cone penetration measurements, the RCFC bearing lubricant, W Style No. 773A773G05, undergoes no significant change in properties, as measured in terms of consistency.

TABLE 6.2-3

NLGI LUBRICATING GREASE CONSISTENCY CLASSIFICATION

Consistency Number	ASTM Worked Penetration at 77°F
0	355 to 385
1	310 to 340
2	265 to 295
3	220 to 250
4	175 to 205
5	130 to 160
6	85 to 115

A consistency of #0 implies a very soft semifluid grease, with numbers 1, 2, 3 etc., indicating progressively stiffer grease up to #6 which indicates a stiff, tacky water pump lubricant type material.

TABLE 6.2-4 (1 of 13)
CONTAINMENT ISOLATION AND ISOLATION VALVE SEAL WATER

Pen. No.	Sys.	Service	Inside Barrier[1]	1st Valve Inside	2nd Valve Inside	Isolation Signal[2]	Outside Barrier[1]	1st Valve Outside	2nd Valve Outside	Isolation Signal[2]	Pen. Class	Seal System[3]
1	FP	Fire Protection	Missile Protected	N/A	N/A	N/A	1 AOV	FCV-FP08	N/A	T	4	FP Sys.
2	SPARE											
3	SPARE											
4	SI	HPSI Cold Leg	1 Chk Vlv	SI9032	N/A	N/A	2 MOVs 2 AOVs	MOV-SI8803A/B AOV-SI8870A*	N/A AOV-SI8870B*	None SI(S)	7	None
5	MS	MSIV - Loop 1	Missile Protected/ Closed System	N/A	N/A	N/A	1 HOV 3 MOVs 5 Rlf Vlvs 2 Man Vlvs	HOV-MS0001 FCV-MS82 MOV-MS0005 MOV-MS0017 MS0014,15,16, 17,18 (MS0054 or MS0175)	N/A	P S	4	None
6	MS	MSIV - Loop 2	Missile Protected/ Closed System	N/A	N/A	N/A	1 HOV 2 MOVs 5 Rlf Vlvs 2 Man Vlvs	HOV-MS0002 MOV-MS0018 FCV-MS83 MS0019,20,21, 22,23 (MS0055 or MS0176)	N/A	P S	4	None
7	MS	MSIV - Loop 3	Missile Protected/ Closed System	N/A	N/A	N/A	1 HOV 3 MOVs 5 Rlf Vlvs 2 Man Vlvs	HOV-MS0003 FCV-MS84 MOV-MS0011 MOV-MS0019 MS0024,25,26, 27,28 (MS0056 or MS0177)	N/A	P S	4	None
8	MS	MSIV - Loop 4	Missile Protected/ Closed System	N/A	N/A	N/A	1 HOV 2 MOVs 5 Rlf Vlvs 2 Man Vlvs	HOV-MS0004 FCV-MS85 MOV-MS0020 MS0029,30,31, 32,33 (MS0057 or MS0178)	N/A	P S	4	None

TABLE 6.2-4 (2 of 13)
CONTAINMENT ISOLATION AND ISOLATION VALVE SEAL WATER

Pen. No.	Sys.	Service	Inside Barrier[1]	1st Valve Inside	2nd Valve Inside	Isolation Signal[2]	Outside Barrier[1]	1st Valve Outside	2nd Valve Outside	Isolation Signal[2]	Pen. Class	Seal System[3]
9	FW	Feedwater to S/G A	Missile Protected/ Closed System	N/A	N/A	N/A	1 MOV 1 Man Vlv	MOV-FW0018 CA0062	N/A	S	4	None
10	FW	Feedwater to S/G C	Missile Protected/ Closed System	N/A	N/A	N/A	1 MOV 1 Man Vlv	MOV-FW0017 CA0063	N/A	S	4	None
11	FW	Feedwater to S/G D	Missile Protected/ Closed System	N/A	N/A	N/A	1 MOV 1 Man Vlv	MOV-FW0019 CA0061	N/A	S	4	None
12	FW	Feedwater to S/G B	Missile Protected/ Closed System	N/A	N/A	N/A	1 MOV 1 Man Vlv	MOV-FW0016 CA0064	N/A	S	4	None
13	FW	Aux. Feedwater to S/G B	Missile Protected/ Closed System	N/A	N/A	N/A	1 MOV	MOV-FW0050,51	N/A	None	7	None
14	DT	N_2 to RCDT	Missile Protected	N/A	N/A	N/A	1 Chk Vlv 1 AOV	DT9158	AOV-DT9157	T	4	None
14	DT	PRT/RCDT Vent to WG Compressor	Missile Protected	N/A	N/A	N/A	2 AOVs	AOV-DT9160A	AOV-DT9160B	T	4	IVSW (Auto)
14	RC	N_2 to PRT	1 Chk Vlv	RC8047	N/A	N/A	1 AOV 1 NO Man Vlv	AOV-RC8033 RC-8045	N/A	T	4	None
14	SA	Service Air to Containment	None	N/A	N/A	N/A	2 AOVs	FCV-SA01A	FCV-SA01B	T	3A	IVSW (Auto)
15	PR	Cont. Air Sample to H_2 Mon.-Loop A	None	N/A	N/A	N/A	2 NC SOVs	SOV-PR26A	SOV-PR25A*	T	5	Pen. Press. Air
15	PR	Cont. Air Sample to H_2 Mon.-Loop B	None	N/A	N/A	N/A	2 NC SOVs	SOV-PR26B	SOV-PR25B*	T	5	Pen. Press. Air

TABLE 6.2-4 (3 of 13)
CONTAINMENT ISOLATION AND ISOLATION VALVE SEAL WATER

Pen. No.	Sys.	Service	Inside Barrier[1]	1st Valve Inside	2nd Valve Inside	Isolation Signal[2]	Outside Barrier[1]	1st Valve Outside	2nd Valve Outside	Isolation Signal[2]	Pen. Class	Seal System[3]
15	PR	Cont. Air Sample to H_2 Mon.-Loop C	None	N/A	N/A	N/A	2 NC SOVs	SOV-PR26C	SOV-PR25C*	T	5	Pen. Press. Air
15	PR	Cont. Air Sample to H_2 Mon.-Loop D	None	N/A	N/A	N/A	2 NC SOVs	SOV-PR26D	SOV-PR25D*	T	5	Pen. Press. Air
16	PR	Rx Vessel Leak Detection	None	N/A	N/A	N/A	2 AOVs	FCV-PR19A	FCV-PR19B	T	2	IVSW (Auto)
16	PR	Rx Vessel Leak Detection	None	N/A	N/A	N/A	2 AOVs	FCV-PR20A	FCV-PR20B	T	2	IVSW (Auto)
16	PR	Rx Vessel Leak Detection	None	N/A	N/A	N/A	2 AOVs	FCV-PR21A	FCV-PR21B	T	2	IVSW (Auto)
16	PR	Rx Vessel Leak Detection	None	N/A	N/A	N/A	2 AOVs	FCV-PR22A	FCV-PR22B	T	2	IVSW (Auto)
16	PR	Rx Vessel Leak Detection	None	N/A	N/A	N/A	2 AOVs	FCV-PR23A	FCV-PR23B	T	2	IVSW (Auto)
17	RH	RH Loop Inlet to RHR Pump Suction	1 NC MOV	MOV-RH8701*	N/A	None	Clsd Sys	N/A	N/A	N/A	5	RHR Sys.
18	SPARE											
19	CC	Component Cooling Water to RCPs	1 Chk Vlv	CC9486	N/A	N/A	2 MOVs	MOV-CC9413A	MOV-CC9413B	P	3	IVSW (Man)
20	SPARE											
21	SPARE											
22	RH	RHR Hot Leg SI From RHR Pump Discharge	None	N/A	N/A	N/A	1 NC MOV	MOV-RH9000	N/A	None	7	RHR Sys.

TABLE 6.2-4 (4 of 13)
CONTAINMENT ISOLATION AND ISOLATION VALVE SEAL WATER

Pen. No.	Sys.	Service	Inside Barrier[1]	1st Valve Inside	2nd Valve Inside	Isolation Signal[2]	Outside Barrier[1]	1st Valve Outside	2nd Valve Outside	Isolation Signal[2]	Pen. Class	Seal System[3]
23	CC	Component Cooling Return From RCP Oil Coolers	None	N/A	N/A	N/A	1 MOV (Dbl Dsk)	MOV-CC9414	N/A	P	2	IVSW (Man)
24	SI	Hot Leg SI From SI Pump A	None	N/A	N/A	N/A	1 MOV	MOV-SI9011A	N/A	None	7	SI Sys.
25	VC	RCP Seal Water Return	None	N/A	N/A	N/A	1 MOV (Dbl Dsk)	MOV-VC8100	N/A	T	2	IVSW (Auto)
26	SPARE											
28	CC	Component Cooling Supply to Excess Letdown Hx	1 Chk Vlv/ Missile Protected/ Closed System	CC9500	N/A	N/A	1 NC Man Vlv	CC9499	N/A	None	4	None
29	CC	Component Cooling Return From Excess Letdown Hx	Missile Protected/ Closed System	N/A	N/A	N/A	1 AOV	AOV-CC9437	N/A	T	4	None
30	DT	RCDT To Gas Analyzer	None	N/A	N/A	N/A	2 AOVs	AOV-DT9159A	AOV-DT9159B	T	2	IVSW (Auto)
31	CS	Containment Spray	None	N/A	N/A	N/A	Chk Vlv 2 MOVs 2 Man Vlvs 1 NO MOV	CS0005 MOV-CS0049 CS0037 CS0038 MOV-CS0003	MOV-CS0002	None	7	None
32	SW	Service Water Supply to RCFCs	Missile Protected/ Closed System	N/A	N/A	N/A	1 MOV	MOV-SW0002,3*	N/A	None	7	None
33	CC	Component Cooling Return From RCP Thermal Barriers	None	N/A	N/A	N/A	2 MOVs	FCV-CC685	MOV-CC9438	P	2	None
34	DW	Demin. Water to Containment	None	N/A	N/A	N/A	2 NC Man Vlvs	DW0030	DW0038	N/A	5	IVSW (Auto)

TABLE 6.2-4 (5 of 13)
CONTAINMENT ISOLATION AND ISOLATION VALVE SEAL WATER

Pen. No.	Sys.	Service	Inside Barrier[1]	1st Valve Inside	2nd Valve Inside	Isolation Signal[2]	Outside Barrier[1]	1st Valve Outside	2nd Valve Outside	Isolation Signal[2]	Pen. Class	Seal System[3]
35	SPARE											
38	CS	Containment Spray	None	N/A	N/A	N/A	Chk Vlv 1 MOV 2 Man Vlvs 1 NO MOV	CS0013 CS0043 CS0044 MOV-CS0007	MOV-CS0006	None	7	None
39	CS	Containment Spray	None	N/A	N/A	N/A	Chk Vlv 2 MOVs 2 Man Vlvs 1 NO MOV	CS0009 MOV-CS0050 CS0040 CS0041 MOV-CS0005	MOV-CS0004	None	7	None
40	SW	Service Water Return From RCFCs	Missile Protected/ Closed System	N/A	N/A	N/A	1 MOV	MOV-SW0011 (Unit 1) MOV-SW0007 (Unit 2)	N/A	None	7	None
41	CS	Containment Pressure Sensing	None	N/A	N/A	N/A	2 Man Vlvs Closed System	CS0052	CS0053	N/A	7	Pen. Press. Air
42	WD	Containment Sump Pump Discharge	None	N/A	N/A	N/A	2 AOVs	FCV-WD17A	FCV-WD17B	T	2	IVSW (Auto)
43	DT	RCDT Pump Discharge	None	N/A	N/A	N/A	2 AOVs	LCV-DT1003	AOV-DT9170	T	2	IVSW (Auto)
44	PR	Containment Air Monitoring Supply From Containment	None	N/A	N/A	N/A	2 AOVs	FCV-PR24A	FCV-PR24B	T	2	Pen. Press. Air
44	PR	Containment Air Monitoring Outlet to Containment	1 Chk Vlv	PR0029	N/A	N/A	1 Man Vlv	PR0030	N/A	N/A	3B	None
44	IA	Instrument Air Supply to Containment	None	N/A	N/A	N/A	2 AOVs	FCV-IA01A	FCV-IA01B	T	3A	Pen. Press. Air
47	SPARE											

TABLE 6.2-4 (6 of 13)
CONTAINMENT ISOLATION AND ISOLATION VALVE SEAL WATER

Pen. No.	Sys.	Service	Inside Barrier[1]	1st Valve Inside	2nd Valve Inside	Isolation Signal[2]	Outside Barrier[1]	1st Valve Outside	2nd Valve Outside	Isolation Signal[2]	Pen. Class	Seal System[3]
48	SW	Service Water to RCFCs	Missile Protected/ Closed System	N/A	N/A	N/A	1 MOV	MOV-SW0001* MOV-SW0006*	N/A	None	7	None
49	SF	Fuel Transfer Tube	Dbl Gasket Blind Flange	N/A	N/A	N/A	None	N/A	N/A	None	6	Pen. Press. Air
50	SPARE											
51	RV	Containment Purge Inlet	1 NC AOV	AOV-RV0001	N/A	T	1 NC AOV	AOV-RV0002	N/A	T	6	Pen. Press. Air
52	RV	Containment Purge Inlet	1 NC AOV	AOV-RV0003	N/A	T	1 NC AOV	AOV-RV0004	N/A	T	6	Pen. Press. Air
54	CS	Containment Pressure Sensing	None	N/A	N/A	N/A	2 Man Vlvs Closed System	CS0058	CS0059	N/A	7	Pen. Press. Air
56	RV	H_2 Recombiner Return to Containment	None	N/A	N/A	N/A	2 AOVs	FCV-VF01A	FCV-VF01B	T	2	IVSW (Auto)
60	RV	Containment Pressure and Vacuum Relief	None	N/A	N/A	N/A	2 AOVs	AOV-RV0005	AOV-RV0006	T	2	IVSW (Auto)
61	SPARE											
62	SPARE											
64	SPARE											
66	VC	RCP Seal Water Supply-Pump A	1 Chk Vlv	VC8368A	N/A	N/A	2 Man Vlvs	VC8372A	VC8369A	N/A	3A	IVSW (Man)/ VC System

TABLE 6.2-4 (7 of 13)
CONTAINMENT ISOLATION AND ISOLATION VALVE SEAL WATER

Pen. No.	Sys.	Service	Inside Barrier[1]	1st Valve Inside	2nd Valve Inside	Isolation Signal[2]	Outside Barrier[1]	1st Valve Outside	2nd Valve Outside	Isolation Signal[2]	Pen. Class	Seal System[3]
66	VC	RCP Seal Water Supply-Pump B	1 Chk Vlv	VC8368D	N/A	N/A	2 Man Vlvs	VC8372D	VC8369D	N/A	3A	IVSW (Man)/ VC System
66	VC	RCP Seal Water Supply-Pump C	1 Chk Vlv	VC8368B	N/A	N/A	2 Man Vlvs	VC8372B	VC8369B	N/A	3A	IVSW (Man)/ VC System
66	VC	RCP Seal Water Supply-Pump D	1 Chk Vlv	VC8368C	N/A	N/A	2 Man Vlvs	VC8372C	VC8369C	N/A	3A	IVSW (Man)/ VC System
67	SPARE											
68	FW	Aux. Feedwater to S/G C	Missile Protected/ Closed System	N/A	N/A	N/A	1 MOV	MOV-FW0052,53	N/A	None	7	None
69	FW	Aux. Feedwater to S/G A	Missile Protected/ Closed System	N/A	N/A	N/A	1 MOV	MOV-FW0054,55	N/A	None	7	None
70	SF	Refueling Cavity to Purification Pump	None	N/A	N/A	N/A	2 NC Man Vlvs	SF8767	0SF0011 (Unit 1) 0SF0012 (Unit 2)	N/A	5	IVSW (Auto)
71	BD	S/G Blowdown	Missile Protected/ Closed System	N/A	N/A	N/A	1 AOV	FCV-BD17	N/A	T	4	None
72	VC	Letdown From Regen Hx	None	N/A	N/A	N/A	2 AOVs	AOV-VC8152	AOV-VC8153	T	1	IVSW (Auto)
73	SPARE											
74	FW	Aux. Feedwater to S/G D	Missile Protected/ Closed System	N/A	N/A	N/A	1 MOV	MOV-FW0056,57	N/A	None	7	None

TABLE 6.2-4 (8 of 13)
CONTAINMENT ISOLATION AND ISOLATION VALVE SEAL WATER

Pen. No.	Sys.	Service	Inside Barrier[1]	1st Valve Inside	2nd Valve Inside	Isolation Signal[2]	Outside Barrier[1]	1st Valve Outside	2nd Valve Outside	Isolation Signal[2]	Pen. Class	Seal System[3]
75	VC	Charging to Regen Hx	1 Chk Vlv	VC8246	N/A	N/A	2 MOVs + Closed Sys 2 NO Man Vlvs 1 NO HCV Vlv 1 NC Man Vlv	MOV-VC8105 VC8402A/B HCV-VC0182 VC8403	MOV-VC8106	S	3B	IVSW (Man)/ VC Sys.
76	SS	Accumulator Tank Sample	None	N/A	N/A	N/A	2 AOVs	AOV-SS9357A	AOV-SS9357B	T	2	IVSW (Auto)
76	SI	N_2 Supply to Accumulators	1 Chk Vlv Missile Protected	SI8933	N/A	N/A	1 AOV 1 NO Man Vlv 1 Rlf Vlv	AOV-SI8880 SI0007 SI8857	N/A	T	5	None
76	SI	Accumulator Test Line	None	N/A	N/A	N/A	1 AOV 2 NC Man Vlvs	AOV-SI8888* SI0245	N/A SI8961	None	5	None
76	VC	Loop Fill Header	1 Chk Vlv	VC8224	N/A	N/A	2 NC Man Vlvs	VC8480A	VC8480B	N/A	5	IVSW (Auto)
77	PP	Penetration Pressurization - Zone 1	Missile Protected/ Closed System	N/A	N/A	N/A	1 Man Vlv	PP0104	N/A	N/A	7	Pen. Press. Air
77	PP	Penetration Pressurization - Zone 2	Missile Protected/ Closed System	N/A	N/A	N/A	1 Man Vlv	PP0103	N/A	N/A	7	Pen. Press. Air
77	PP	Penetration Pressurization - Zone 3	Missile Protected/ Closed System	N/A	N/A	N/A	1 Man Vlv	PP0102	N/A	N/A	7	Pen. Press. Air
77	PP	Penetration Pressurization - Zone 4	Missile Protected/ Closed System	N/A	N/A	N/A	1 Man Vlv	PP0101	N/A	N/A	7	Pen. Press. Air
78	CS	Containment Pressure Sensing	None	N/A	N/A	N/A	2 Man Vlvs Closed System	CS0054	CS0055	N/A	7	Pen. Press. Air
79	SW	Service Water Return From RCFCs	Missile Protected/ Closed System	N/A	N/A	N/A	1 MOV	MOV-SW0007 (Unit 1) MOV-SW0011 (Unit 2)	N/A	None	7	None

TABLE 6.2-4 (9 of 13)
CONTAINMENT ISOLATION AND ISOLATION VALVE SEAL WATER

Pen. No.	Sys.	Service	Inside Barrier[1]	1st Valve Inside	2nd Valve Inside	Isolation Signal[2]	Outside Barrier[1]	1st Valve Outside	2nd Valve Outside	Isolation Signal[2]	Pen. Class	Seal System[3]
80	RC	Relief Vlv Header to PRT	1 Chk Vlv	RC8079	N/A	N/A	None	N/A	N/A	N/A	3B	None
81	VN	Aux. Feed Pump Steam Line Drain	None	N/A	N/A	N/A	2 AOVs	FCV-VN02A	FCV-VN02B	T	2	IVSW (Auto)
82	CS	Containment Pressure Sensing	None	N/A	N/A	N/A	2 Man Vlvs Closed System	CS0056	CS0057	N/A	7	Pen. Press. Air
83	SPARE											
84	SPARE											
85	SPARE											
86	SS	Pressurizer Steam Sample	None	N/A	N/A	N/A	2 AOVs	AOV-SS9354A	AOV-SS9354B	T	1	IVSW (Auto)
86	SS	Pressurizer Liquid Sample	None	N/A	N/A	N/A	2 AOVs	AOV-SS9355A	AOV-SS9355B	T	1	IVSW (Auto)
86	SS	Reactor Coolant Sample	None	N/A	N/A	N/A	2 AOVs	AOV-SS9356A	AOV-SS9356B	T	1	IVSW (Auto)
86	SS	PRT to Auto Gas Analyzer	None	N/A	N/A	N/A	2 AOVs	AOV-RC8026	AOV-RC8025	T	1	IVSW (Auto)
86	SPARE											
86	SPARE											
87	SPARE											
88	RV	Containment Hot Water Supply	None	N/A	N/A	N/A	2 AOVs	FCV-RV112	FCV-RV111	T	5	IVSW (Auto)
89	RV	Containment Hot Water Return	None	N/A	N/A	N/A	2 AOVs	FCV-RV114	FCV-RV113	T	5	IVSW (Auto)
90	SPARE											

TABLE 6.2-4 (10 of 13)
CONTAINMENT ISOLATION AND ISOLATION VALVE SEAL WATER

Pen. No.	Sys.	Service	Inside Barrier[1]	1st Valve Inside	2nd Valve Inside	Isolation Signal[2]	Outside Barrier[1]	1st Valve Outside	2nd Valve Outside	Isolation Signal[2]	Pen. Class	Seal System[3]
91	BD	S/G A Blowdown	Missile Protected/ Closed System	N/A	N/A	N/A	2 Man Vlvs	BD0015,16	N/A	N/A	4	None
92	BD	S/G A Blowdown	Missile Protected/ Closed System	N/A	N/A	N/A	2 AOVs	AOV-BD0008 FCV-SS05	N/A	T	4	None
93	BD	S/G C Blowdown	Missile Protected/ Closed System	N/A	N/A	N/A	2 AOVs	AOV-BD0006 FCV-SS04	N/A	T	4	None
94	BD	S/G C Blowdown	Missile Protected/ Closed System	N/A	N/A	N/A	2 Man Vlvs	BD0013,14	N/A	N/A	4	None
95	BD	S/G A Blowdown	Missile Protected/ Closed System	N/A	N/A	N/A	1 AOV	AOV-BD0007	N/A	T	4	None
96	BD	S/G C Blowdown	Missile Protected/ Closed System	N/A	N/A	N/A	1 AOV	AOV-BD0005	N/A	T	4	None
97	BD	S/G D Blowdown	Missile Protected/ Closed System	N/A	N/A	N/A	1 AOV	AOV-BD0003	N/A	T	4	None
98	BD	S/G B Blowdown	Missile Protected/ Closed System	N/A	N/A	N/A	1 AOV	AOV-BD0001	N/A	T	4	None
99	SF	Purification Pump Return to Refueling Cavity	None	N/A	N/A	N/A	2 NC Man Vlvs	SF8787	SF0010	N/A	5	IVSW (Auto)
100	SPARE											
101	SPARE											
102	RC	Primary Water Supply to PRT	1 Chk Vlv	RC8046	N/A	N/A	2 AOVs	AOV-RC8029	AOV-RC8028	T	3A	IVSW (Auto)

TABLE 6.2-4 (11 of 13)
CONTAINMENT ISOLATION AND ISOLATION VALVE SEAL WATER

Pen. No.	Sys.	Service	Inside Barrier[1]	1st Valve Inside	2nd Valve Inside	Isolation Signal[2]	Outside Barrier[1]	1st Valve Outside	2nd Valve Outside	Isolation Signal[2]	Pen. Class	Seal System[3]
103	SPARE											
104	MS	Main Steam to Aux. Feed Pump	Missile Protected/ Closed System	N/A	N/A	N/A	1 MOV	MOV-MS0006	N/A	None	7	None
105	SPARE											
106	SPARE											
107	SPARE											
108	SI	RHR Supply to RCS - Hx A	1 Chk Vlv	SI8957A	N/A	N/A	1 MOV + Closed System	MOV-SI8809A	N/A	None	7	RHR Sys.
109	SPARE											
110	SI	RHR Supply to RCS - Hx B	1 Chk Vlv	SI8957B	N/A	N/A	1 MOV + Closed System	MOV-SI8809B	N/A	None	7	RHR Sys.
112	SPARE											
113	SPARE											
115	BD	S/G D Blowdown	Missile Protected/ Closed System	N/A	N/A	N/A	2 Man Vlvs	BD0011,12	N/A	N/A	4	None
116	BD	S/G D Blowdown	Missile Protected/ Closed System	N/A	N/A	N/A	2 AOVs	AOV-BD0004 FCV-SS03	N/A	T	4	None
117	BD	S/G B Blowdown	Missile Protected/ Closed System	N/A	N/A	N/A	2 AOVs	AOV-BD0002 FCV-SS02	N/A	T	4	None
118	BD	S/G B Blowdown	Missile Protected/ Closed System	N/A	N/A	N/A	2 Man Vlvs	BD0009,10	N/A	N/A	4	None
119	SW	Service Water Return From RCFCs	Missile Protected/ Closed System	N/A	N/A	N/A	1 MOV	MOV-SW0009	N/A	None	7	None

TABLE 6.2-4 (12 of 13)
CONTAINMENT ISOLATION AND ISOLATION VALVE SEAL WATER

Pen. No.	Sys.	Service	Inside Barrier[1]	1st Valve Inside	2nd Valve Inside	Isolation Signal[2]	Outside Barrier[1]	1st Valve Outside	2nd Valve Outside	Isolation Signal[2]	Pen. Class	Seal System[3]
120	SW	Service Water Return From RCFCs	Missile Protected/ Closed System	N/A	N/A	N/A	1 MOV	MOV-SW0008	N/A	None	7	None
121	SW	Service Water Supply to RCFCs	Missile Protected/ Closed System	N/A	N/A	N/A	1 MOV	MOV-SW0004.5*	N/A	None	7	None
122	SW	Service Water Return From RCFCs	Missile Protected/ Closed System	N/A	N/A	N/A	1 MOV	MOV-SW0010	N/A	None	7	None
123	SI	Containment Recirculation Sump to RHR		N/A	N/A	N/A	1 MOV + Closed System	MOV-SI8811A	N/A	None	7	None
124	SI	Containment Recirculation Sump to RHR		N/A	N/A	N/A	1 MOV + Closed System	MOV-SI8811B	N/A	None	7	None
125	SI	SI Cold Leg	None	N/A	N/A	N/A	1 MOV	MOV-SI8802	N/A	None	7	SI Sys.
126	SI	Hot Leg SI - Train B	None	N/A	N/A	N/A	1 MOV	MOV-SI9011B	N/A	None	7	SI Sys.
127	MS	Main Steam to Aux. Feed Pump Turbine - S/G A Supply	Missile Protected/ Closed System	N/A	N/A	N/A	1 MOV	MOV-MS0005	N/A	None	7	None
128	MS	Main Steam to Aux. Feed Pump Turbine - S/G D Supply	Missile Protected/ Closed System	N/A	N/A	N/A	1 MOV	MOV-MS0011	N/A	None	7	None

TABLE 6.2-4 (13 of 13)
CONTAINMENT ISOLATION AND ISOLATION VALVE SEAL WATER

1. Barrier Abbreviations

NO	Normally Open
NC	Normally Closed
MOV	Motor-Operated Valve
AOV	Air-Operated Valve
HCV	Hand Controlled Valve
HOV	Hydraulic-Operated Valve
SOV	Solenoid-Operated Valve
Man	Manual Operated Valve
Rlf	Relief Valve
Chk	Check Valve
Clsd Sys	Closed System
Dbl Dsk	Double Disk

2. Isolation Signal Abbreviations

Initiated by:		Action:
S	Safety Injection Signal	Actuates safety injection
T	Safety Injection Signal	Actuates containment isolation Phase A (all nonessential process lines)
P	2/4 Hi-Hi Containment Pressure	Actuates containment spray, steamlines isolation and Phase B containment isolation (remaining process lines)

3. Seal System: IVSW Abbreviations

Auto	Automatic Injection of IVSW
Man	Manual Injection of IVSW

* R.G. 1.97 and CIV

--- AOV-SI8870B is not a CIV and is not R.G. 1.97, since the check valve inside Containment and the first valve outside Containment is sufficient.

--- SOV-PR25A, SOV-PR25B, SOV-PR25C, and SOV-PR25D are administratively controlled closed and normally de-energized to satisfy the R.G. 1.97 requirement for positive valve position indication.

--- AOV-SI8888 is administratively controlled closed with air-isolated, normally, to satisfy R.G. 1.97.

--- MOV-RH8701 is administratively controlled closed and normally de-energized to satisfy R.G. 1.97.

--- MOV-SW0001, MOV-SW0002, MOV-SW0003, MOV-SW0004, MOV-SW0005, and MOV-SW0006 only have local indication and control. MOV-SW0001 and MOV-SW0002 are normally open, but get a signal to open during an accident event. Except for this open signal, these six SW valves are post-accident service valves which remain in the same position during an accident as normal operation unless there is a change for system use by local operation. A clarification to R.G. 1.97 was made for these six SW valves in the January 31, 1991 Commitment Letter from S. F. Stimac (NLA) to T. E. Murley (NRC) (see UFSAR Section 7.5.3, Reference 2). These SW valves are only rarely re-positioned and their position is known at any time by previous lineups. Any change to the normal lineup is administratively controlled.

TABLE 6.2-5

PENETRATION MATERIALS

Piping Penetrations:	
Closure Heads	SA-350 Grade LF-2 SA-182 Grade 304 SA-182 Grade 316 SA-516 Grade 55
Bellows Expansion Joints	ASTM A-240 Type 304 or 321
Sleeves	SA-333 Grade 1
D.G. O'Brien Electrical Penetrations:	
Plates	SA-442 Grade 60
Sleeves	SA-333 Grade 1
Structural Shapes	A-36
Conax Buffalo Electrical Penetration Assemblies:	
Plates	SA-442 gr 60
Sleeve	SA-333 gr 1
Structural Shapes	A-36
Extension Tubes, Schedule 80 (both ends)	SA-333 gr 6
Header Plates (both ends)	SA-240 304 SS
Leak Chase Channel (inside containment)	SA-105 (forged steel)
Access Penetrations:	
Plates	SA-516 Grade 60 Firebox quality to SA-300
Structural Shapes	A-36

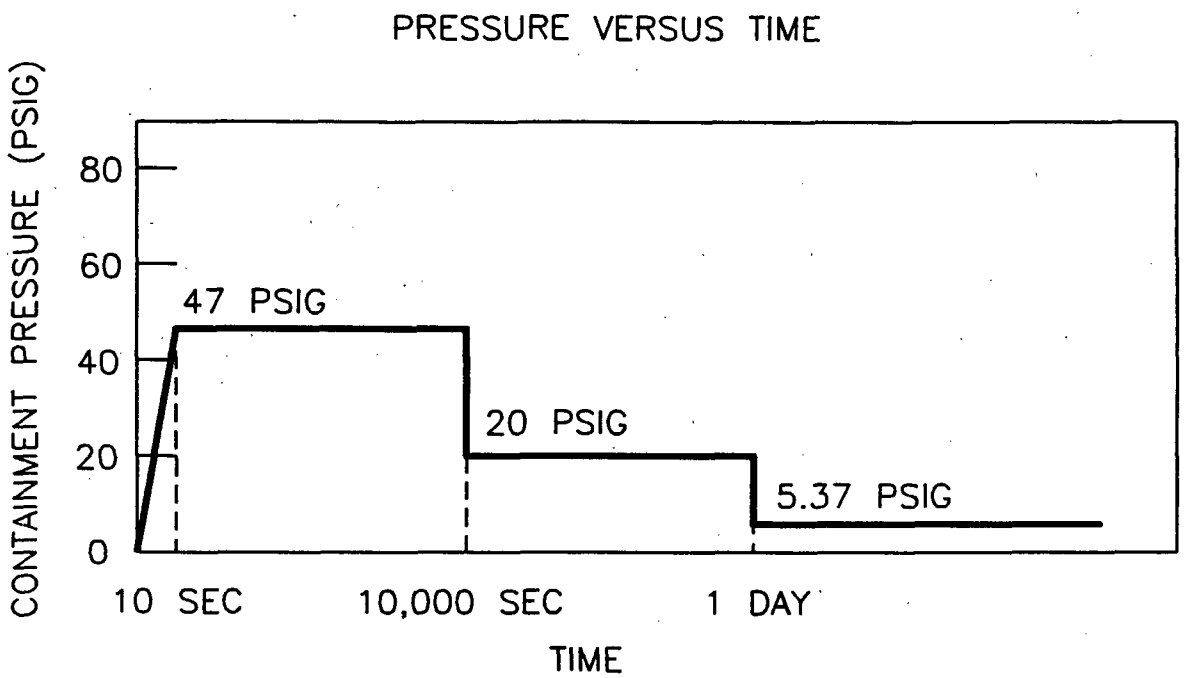

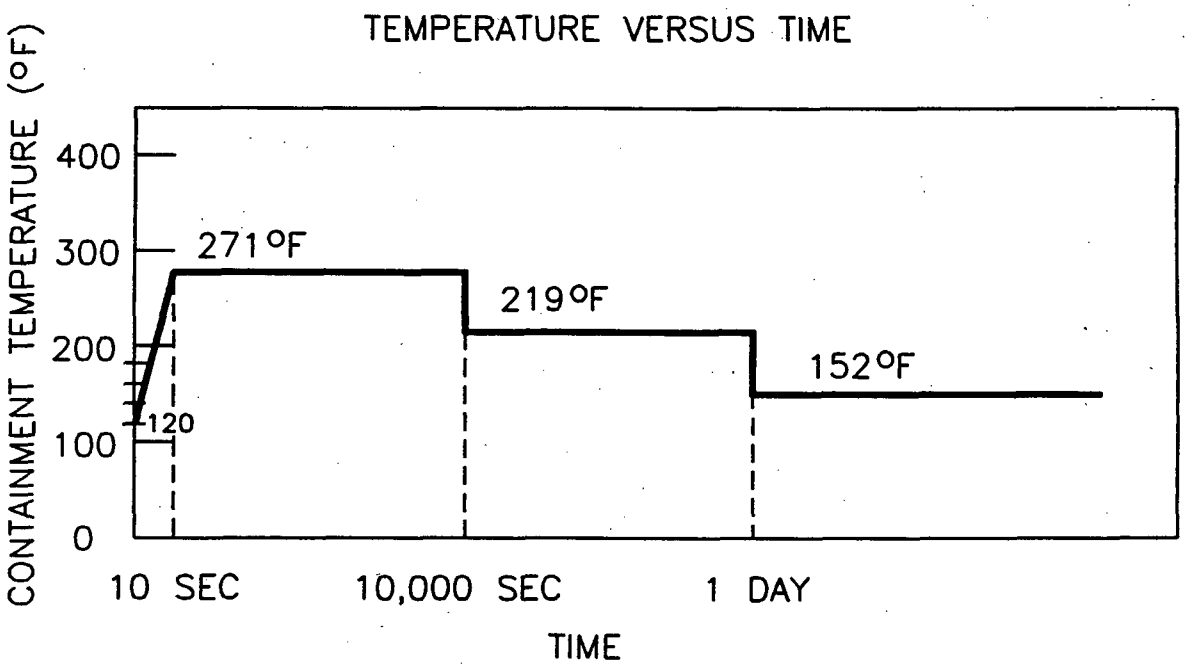

ZION STATION UFSAR

Figure 6.2-1

POST ACCIDENT ENVIRONMENT

MAY 1996

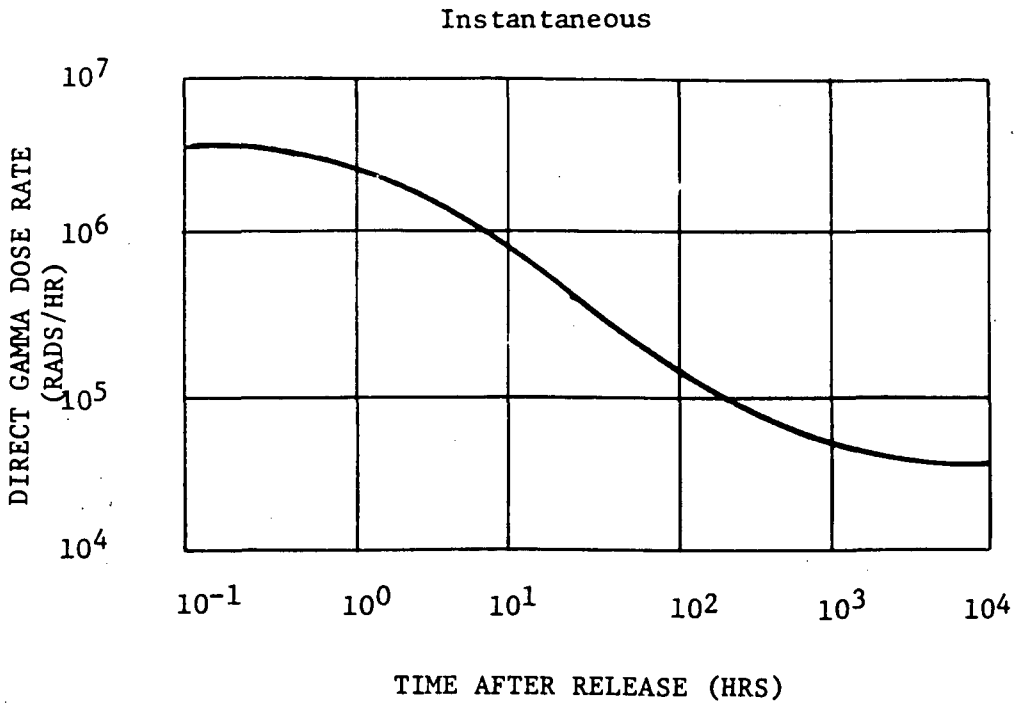

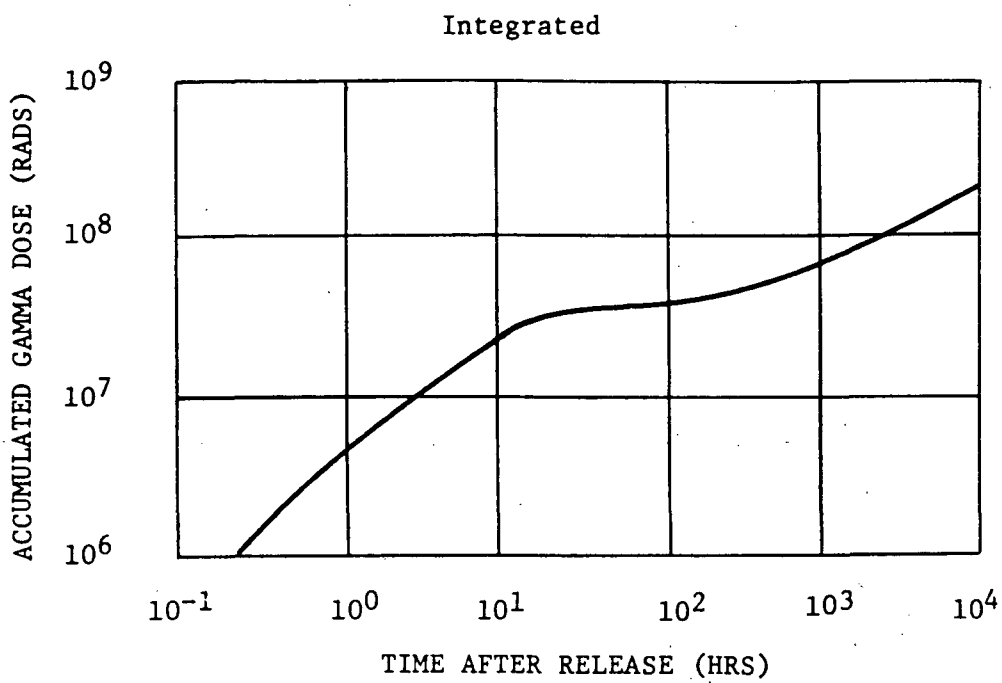

ZION STATION UFSAR

Figure 6.2-2

GAMMA DOSE INSIDE THE CONTAINMENT AS A FUNCTION OF TIME AFTER RELEASE

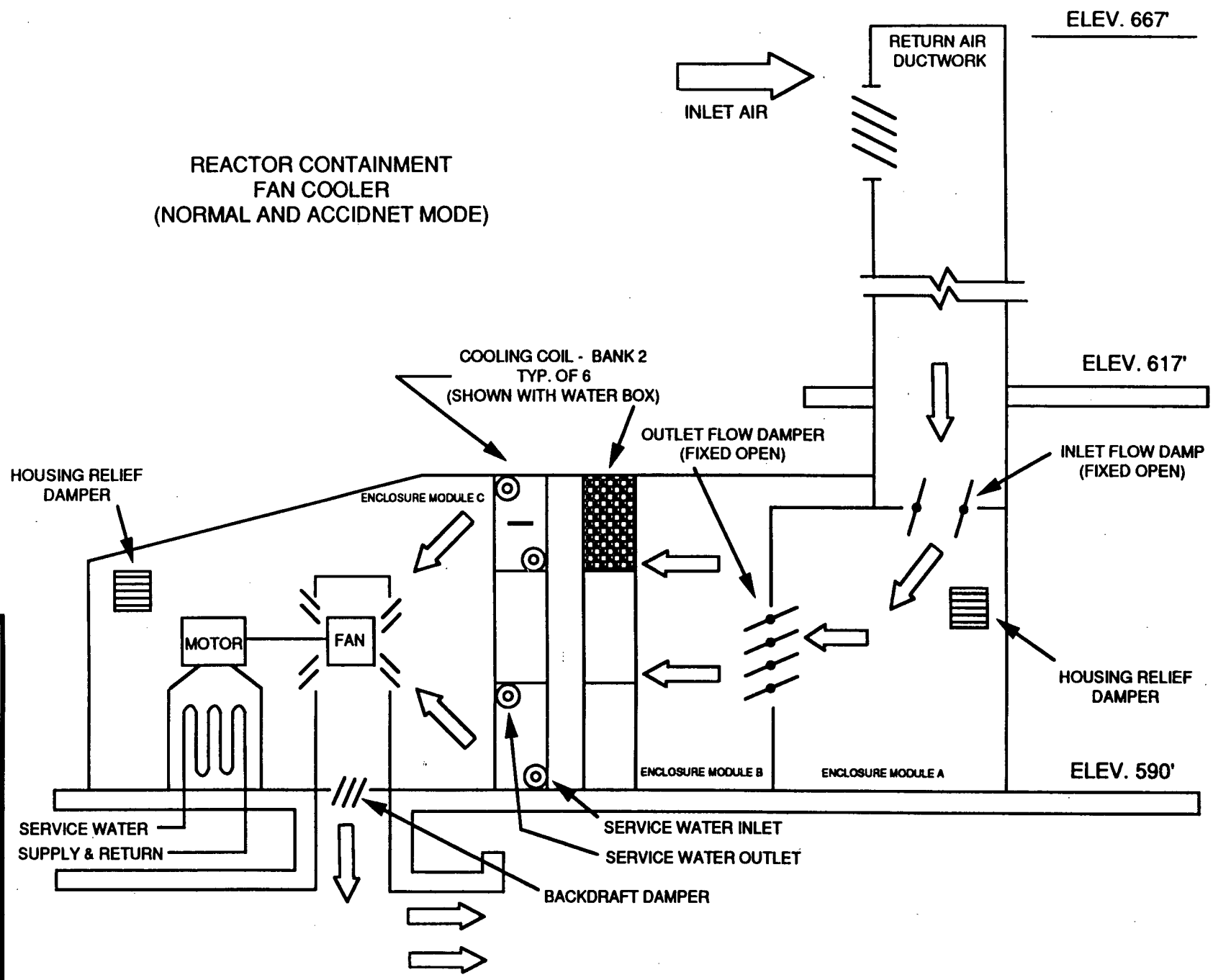

ZION STATION UFSAR

Figure 6.2-3

REACTOR CONTAINMENT FAN COOLER ENCLOSURE ASSEMBLY AND DETAILS

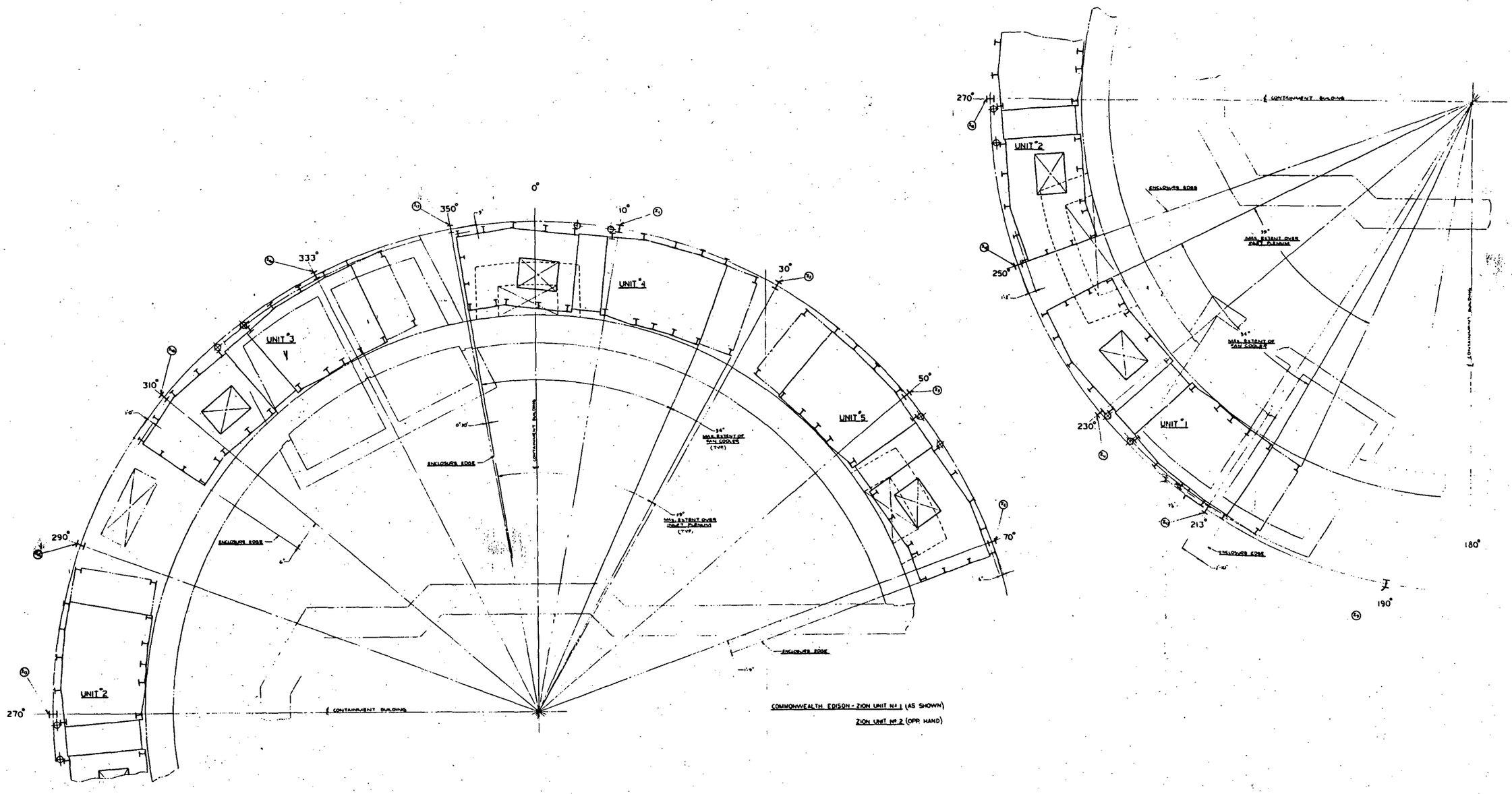

ZION STATION UFSAR

Figure 6.2-4

REACTOR CONTAINMENT FAN COOLER FOUNDATION KEY PLAN

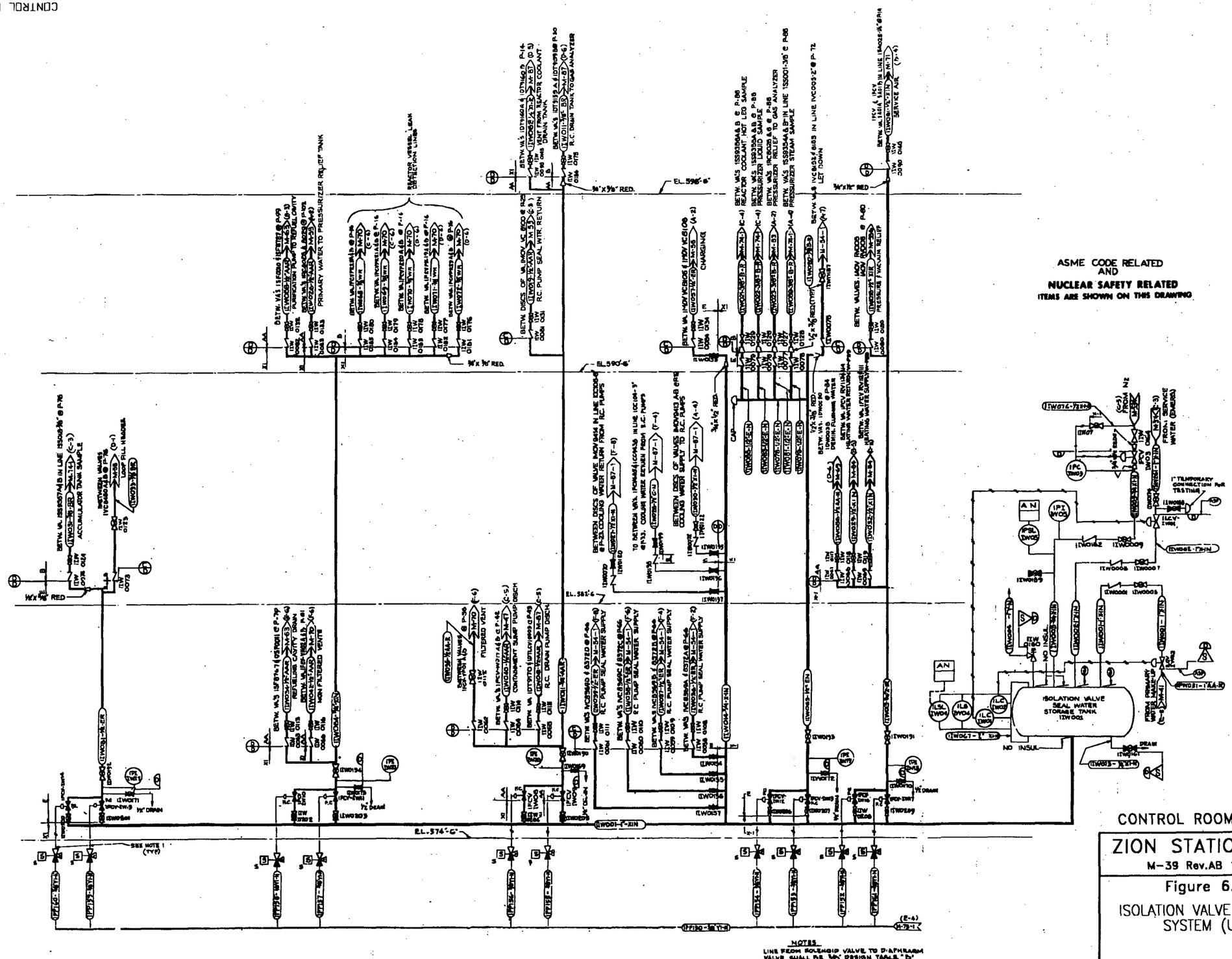

CONTROL ROOM DRAWING

ZION STATION UFSAR

M-39 Rev.AB 10/11/95

Figure 6.2-5

ISOLATION VALVE SEAL WATER SYSTEM (UNIT 1)

MAY 1996

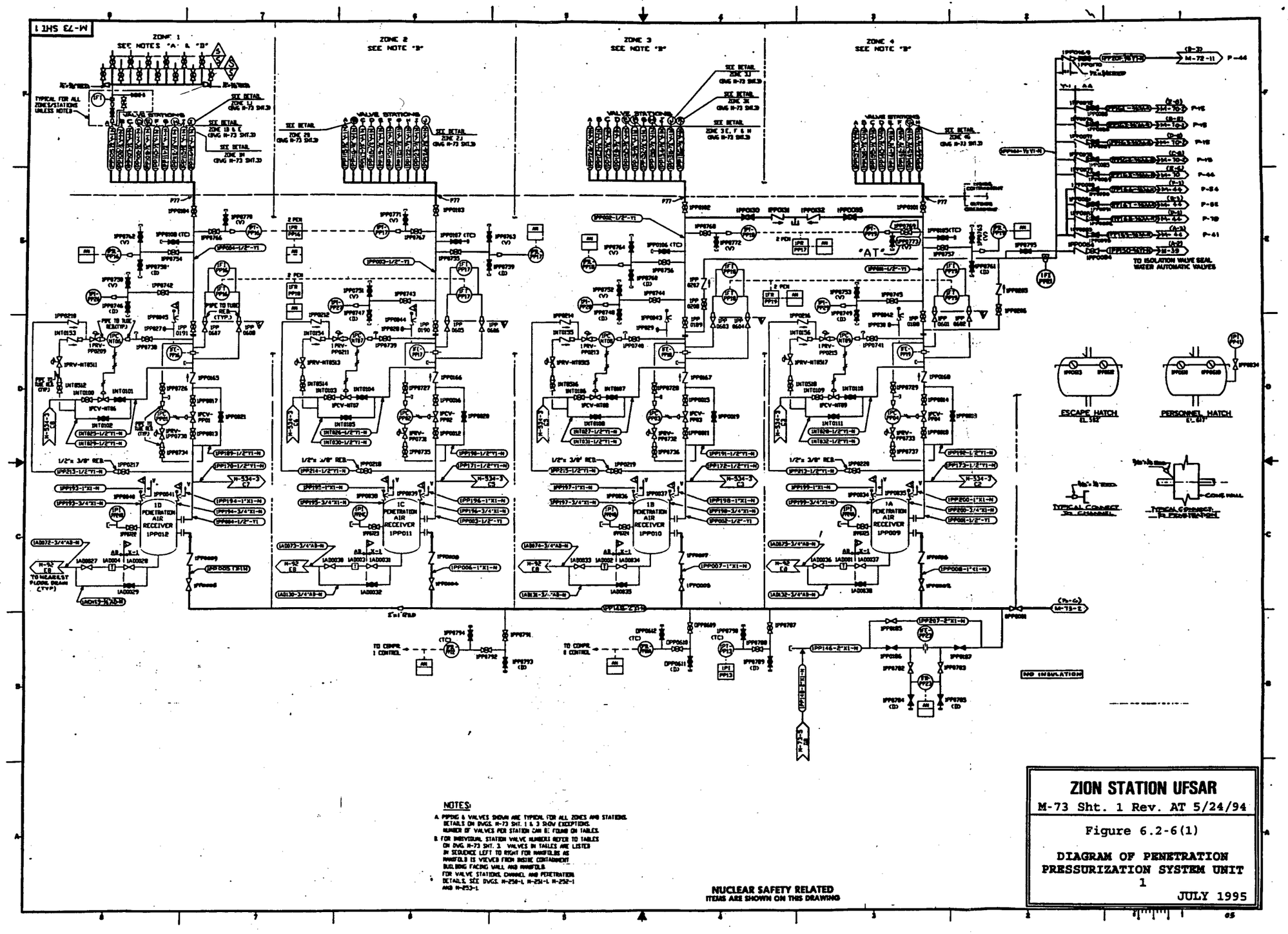

NOTES:

A. PIPING & VALVES SHOWN ARE TYPICAL FOR ALL ZONES AND STATIONS. DETAILS ON DWGS. M-73 SHT. 1 & 3 SHOW EXCEPTIONS. NUMBER OF VALVES PER STATION CAN BE FOUND ON TABLES.

B. FOR INDIVIDUAL STATION VALVE NUMBERS REFER TO TABLES ON DWG. M-73 SHT. 3. VALVES IN TABLES ARE LISTED IN SEQUENCE LEFT TO RIGHT FOR MANIFOLDS AS MANIFOLD IS VIEWED FROM INSIDE CONTAINMENT BUILDING FACING WALL AND MANIFOLD.

FOR VALVE STATIONS, CHANNEL AND PENETRATION DETAILS, SEE DWGS. M-250-1, M-251-1, M-252-1 AND M-253-1.

NUCLEAR SAFETY RELATED
ITEMS ARE SHOWN ON THIS DRAWING

ZION STATION UFSAR

M-73 Sht. 1 Rev. AT 5/24/94

Figure 6.2-6(1)

DIAGRAM OF PENETRATION PRESSURIZATION SYSTEM UNIT 1

JULY 1995

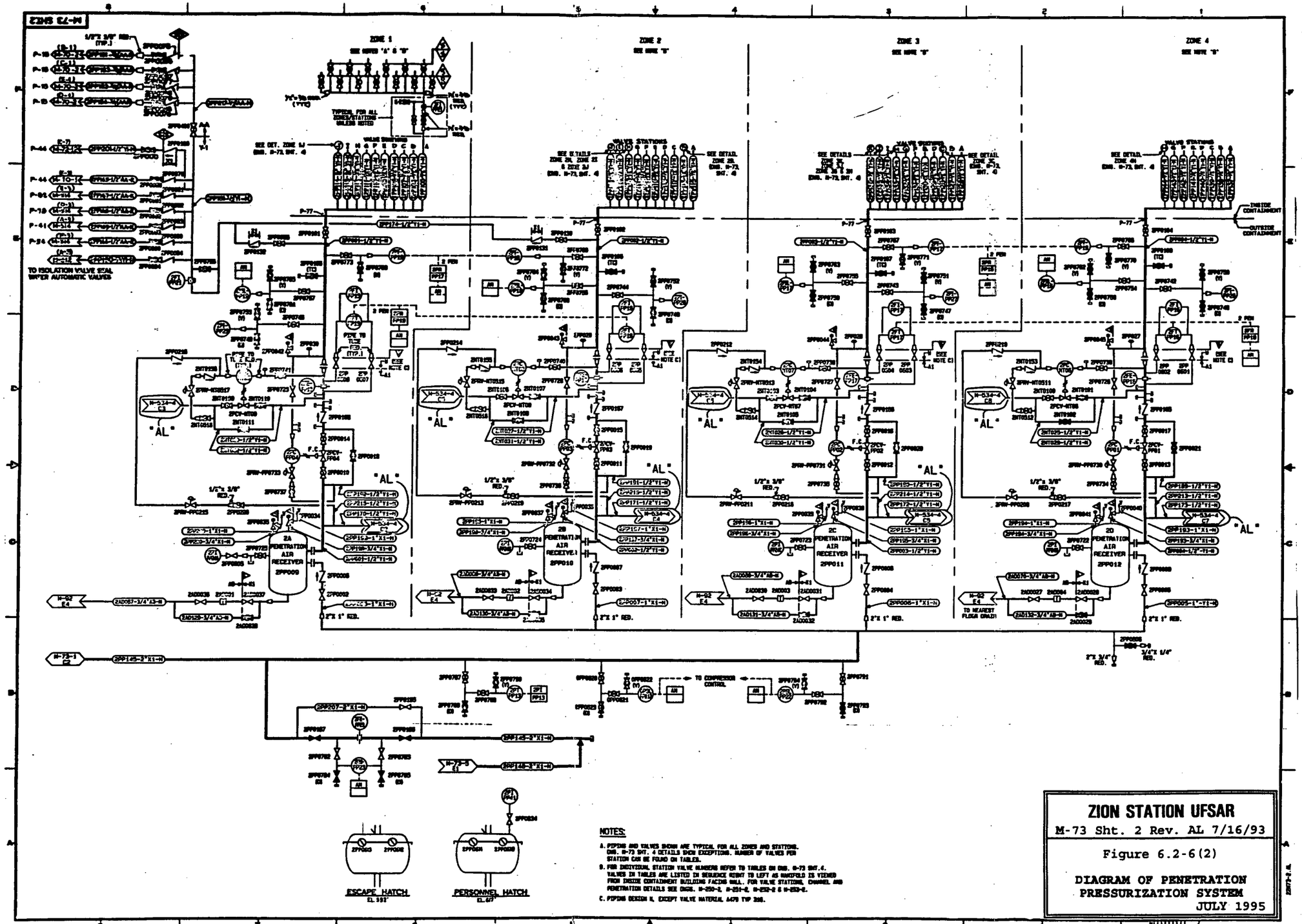

ZION STATION UFSAR

M-73 Sht. 2 Rev. AL 7/16/93

Figure 6.2-6(2)

DIAGRAM OF PENETRATION PRESSURIZATION SYSTEM

JULY 1995

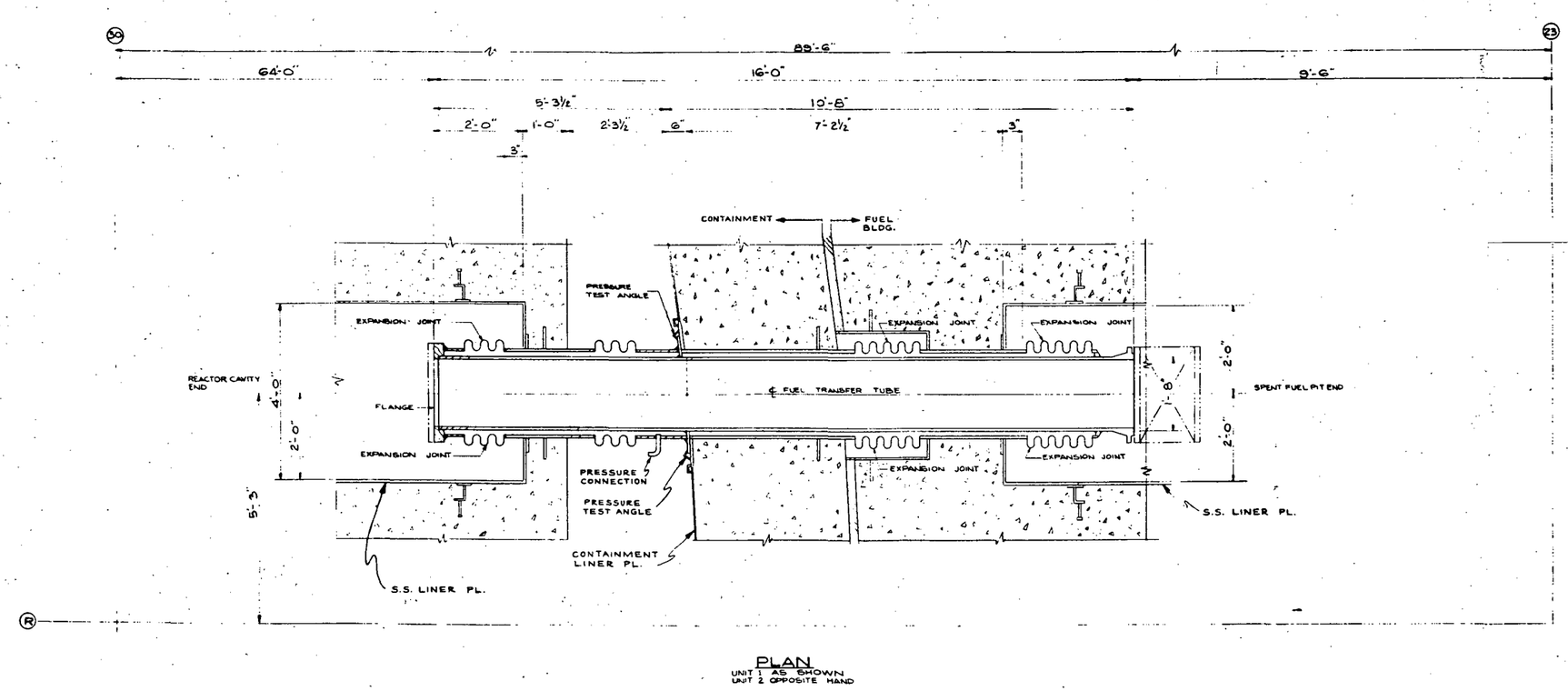

PLAN
UNIT 1 AS SHOWN
UNIT 2 OPPOSITE HAND

ZION STATION UFSAR

Figure 6.2-7
FUEL TRANSFER TUBE

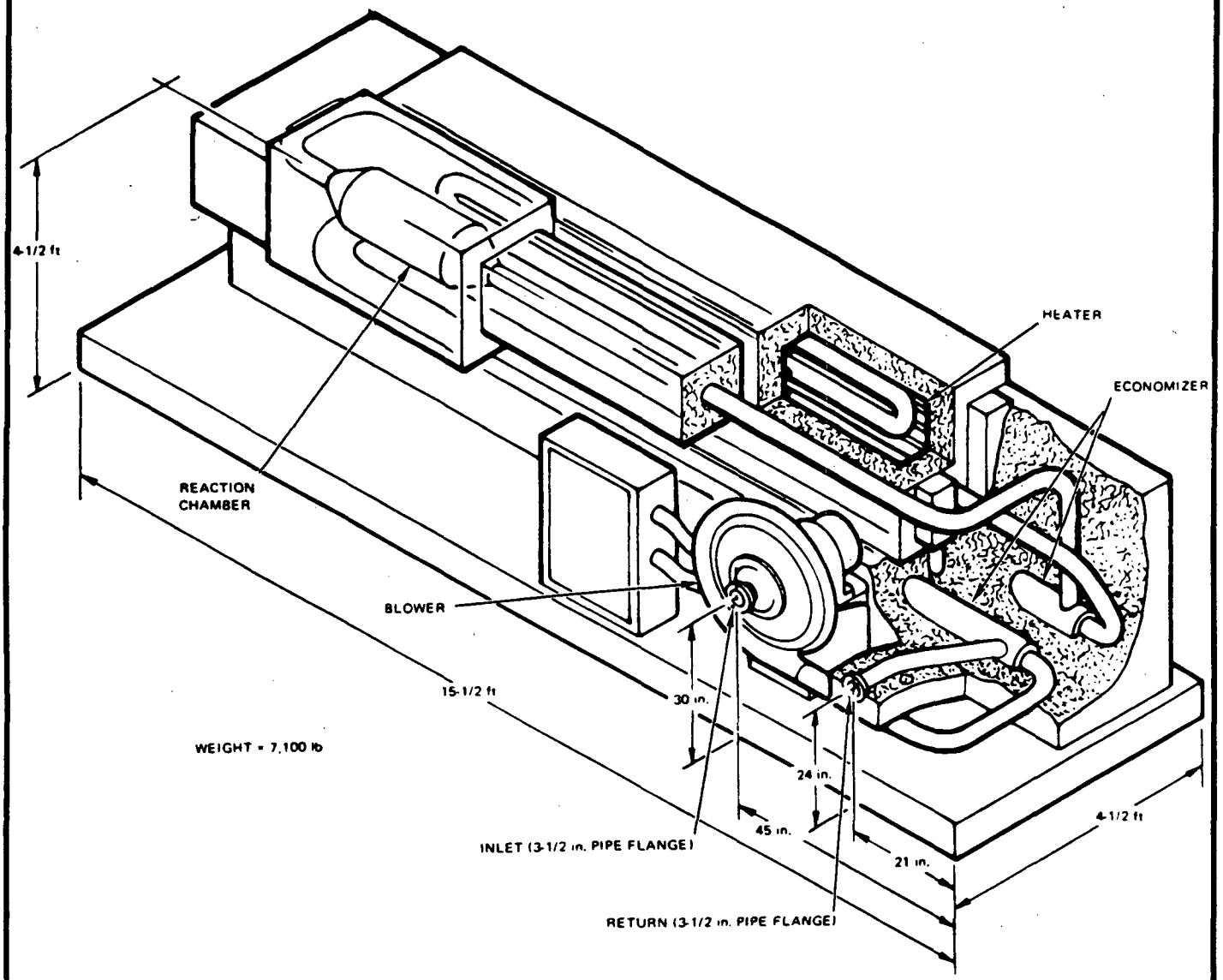

ZION STATION UFSAR

Figure 6.2-8
THERMAL RECOMBINER PACKAGE

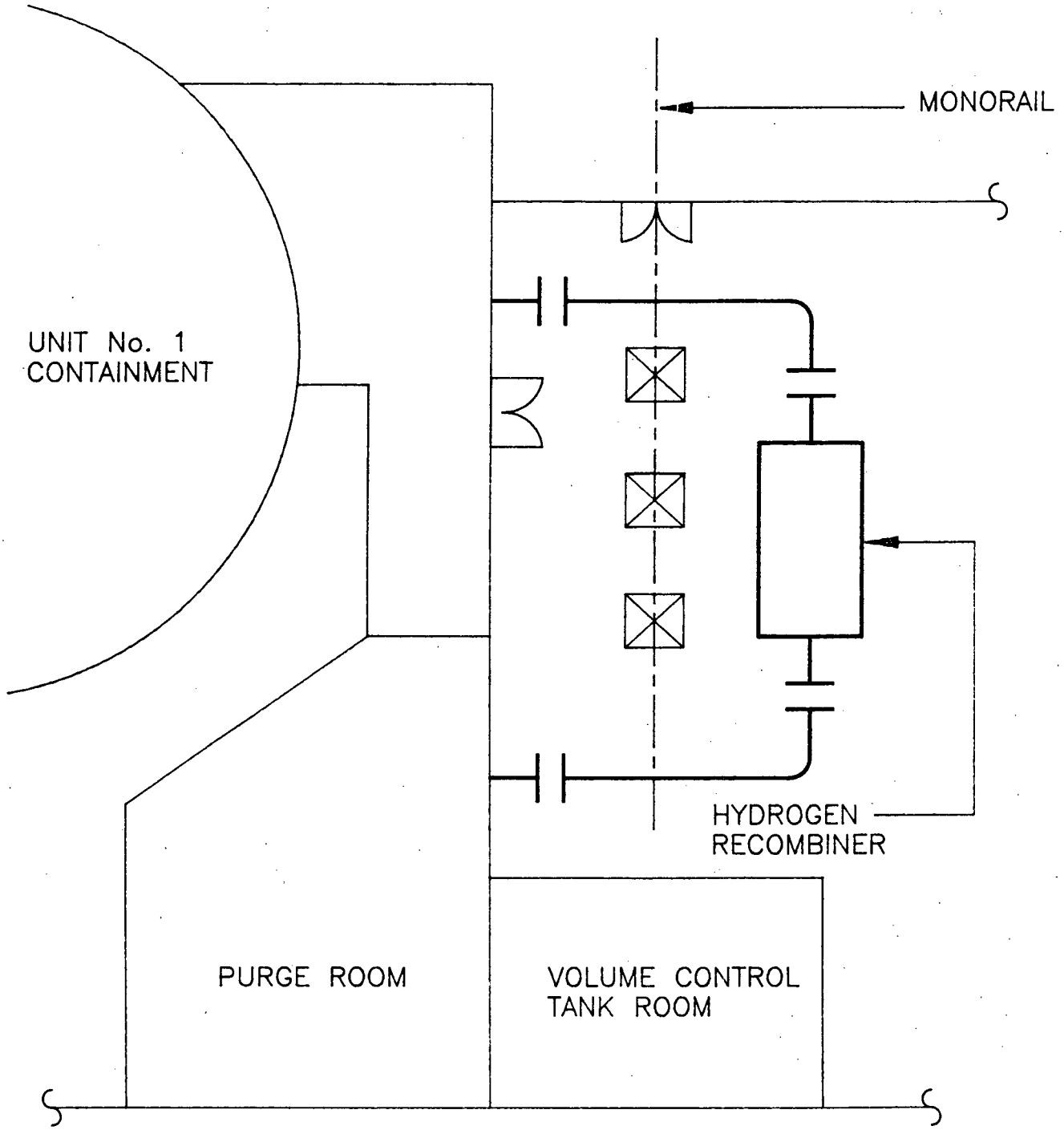

ZION STATION UFSAR

Figure 6.2-9
POST- LOCA LOCATION OF
HYDROGEN RECOMBINER AT EL. 617'
IN THE AUXILIARY BUILDING

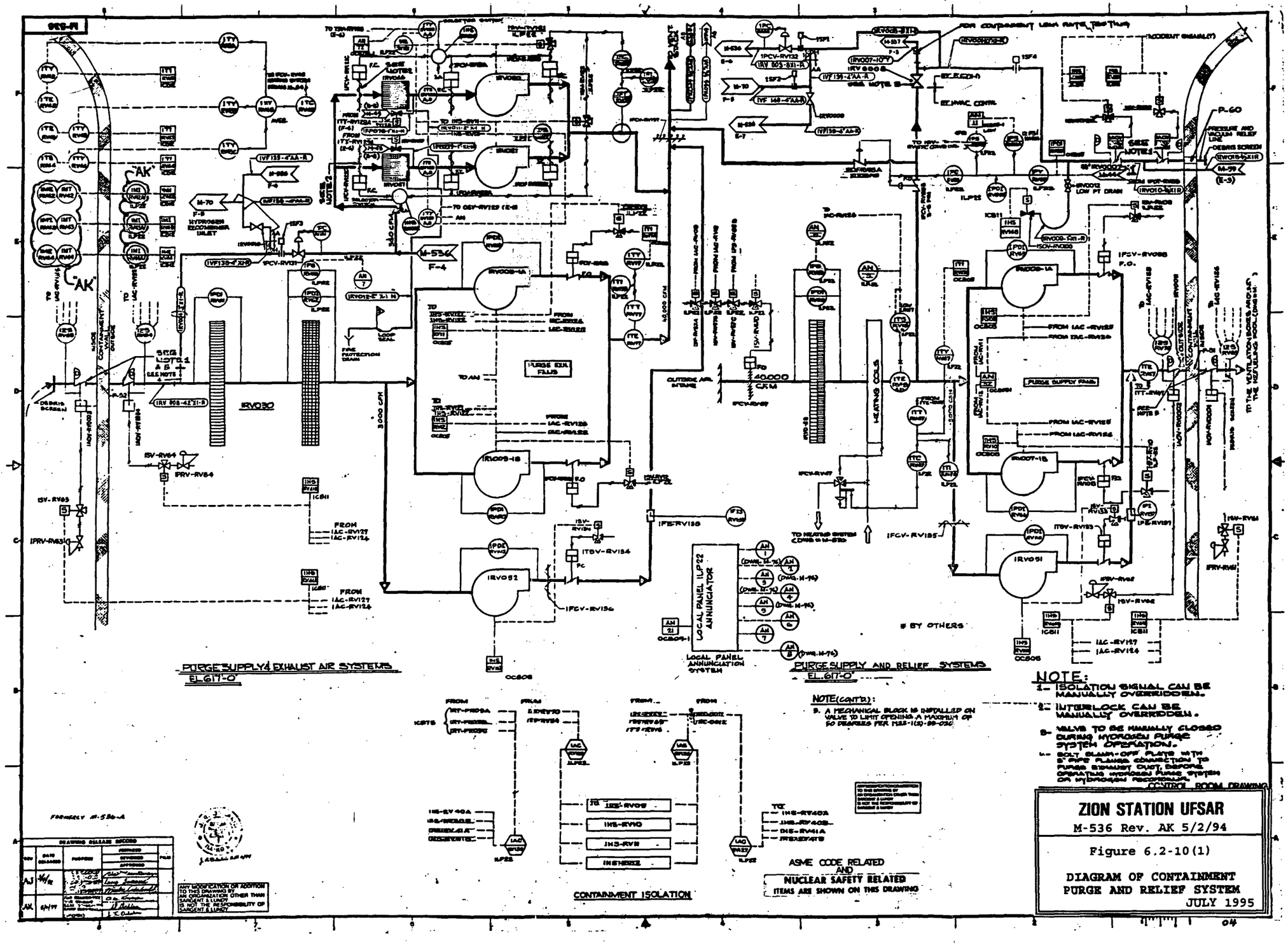
PURGE SUPPLY & EXHAUST AIR SYSTEMS
EL. 617'-0"
PURGE SUPPLY AND RELIEF SYSTEMS
EL. 617'-0"
CONTAINMENT ISOLATION
LOCAL PANEL ILP22 ANNUNCIATOR
LOCAL PANEL ANNUNCIATION SYSTEM
PURGE EXH FANS
PURGE SUPPLY FANS
HEATING COILS
40,000 CFM
3000 CFM
BY OTHERS
NOTE:
1- ISOLATION SIGNAL CAN BE MANUALLY OVERRIDDEN.
2- INTERLOCK CAN BE MANUALLY OVERRIDDEN.
3- VALVE TO BE MANUALLY CLOSED DURING HYDROGEN PURGE SYSTEM OPERATION.
4- BOLT BLANK-OFF PLATE WITH 8" PIPE FLANGE CONNECTION TO PURGE EXHAUST DUCT, BEFORE OPERATING HYDROGEN PURGE SYSTEM OR HYDROGEN RECOMBINER.
NOTE (CONT'D):
9. A MECHANICAL STOP IS INSTALLED ON VALVE TO LIMIT OPENING A MAXIMUM OF 50 DEGREES PER M22-1(3)-89-030
ASME CODE RELATED AND NUCLEAR SAFETY RELATED ITEMS ARE SHOWN ON THIS DRAWING
CONTROL ROOM DRAWING
ZION STATION UFSAR
M-536 Rev. AK 5/2/94
Figure 6.2-10(1)
DIAGRAM OF CONTAINMENT PURGE AND RELIEF SYSTEM
JULY 1995

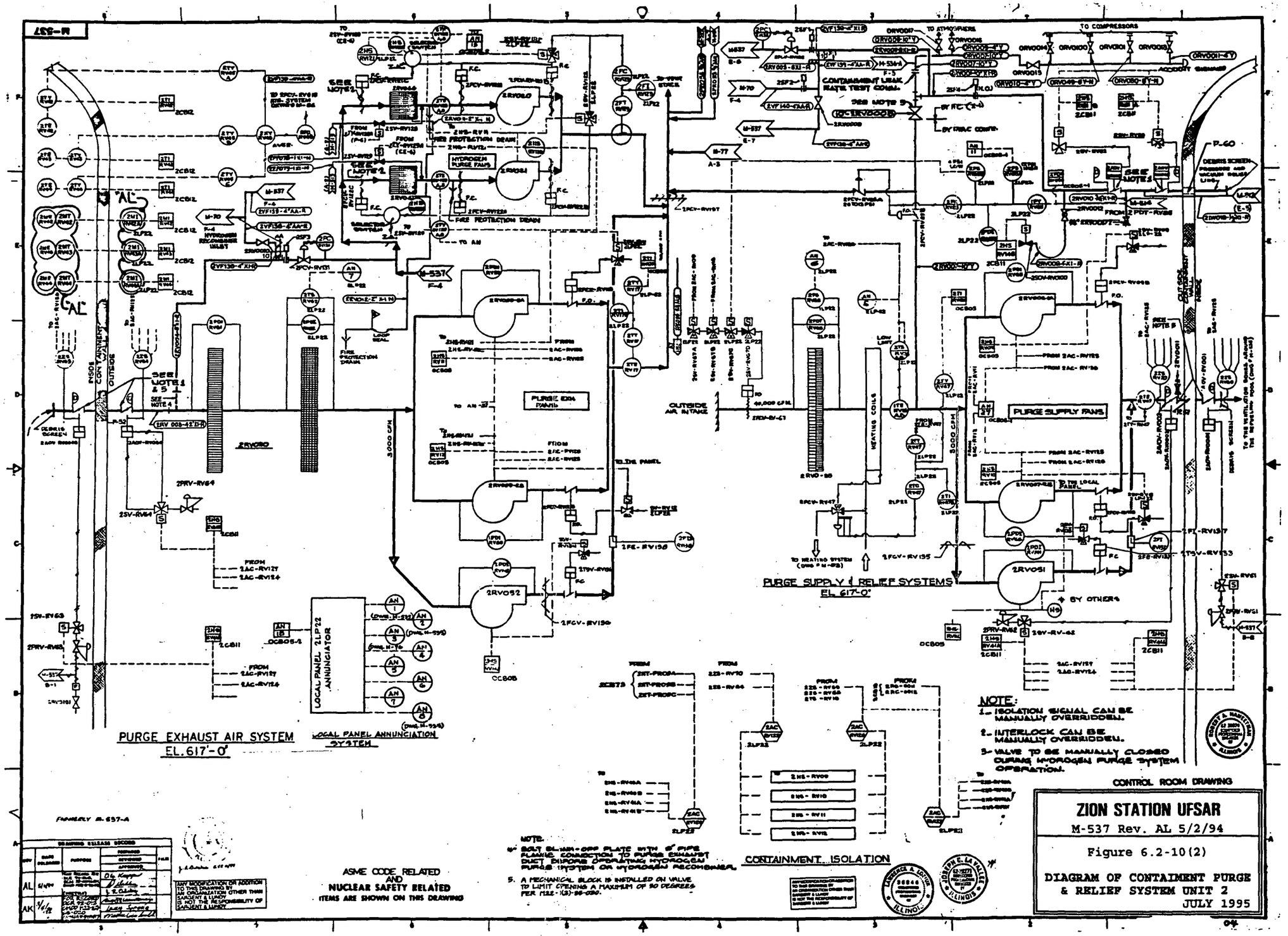
M-537
PURGE EXHAUST AIR SYSTEM
EL. 617'-0"
LOCAL PANEL ANNUNCIATION SYSTEM
LOCAL PANEL 2LP22 ANNUNCIATOR
PURGE SUPPLY & RELIEF SYSTEMS
EL. 617'-0"
PURGE SUPPLY FANS
CONTAINMENT ISOLATION
CONTAINMENT LEAK RATE TEST COND.
HYDROGEN PURGE FANS
OUTSIDE AIR INTAKE
HEATING COILS
NOTE:
1.- ISOLATION SIGNAL CAN BE MANUALLY OVERRIDDEN.
2.- INTERLOCK CAN BE MANUALLY OVERRIDDEN.
3.- VALVE TO BE MANUALLY CLOSED DURING HYDROGEN PURGE SYSTEM OPERATION.
ASME CODE RELATED AND NUCLEAR SAFETY RELATED ITEMS ARE SHOWN ON THIS DRAWING
CONTROL ROOM DRAWING
ZION STATION UFSAR
M-537 Rev. AL 5/2/94
Figure 6.2-10(2)
DIAGRAM OF CONTAIMENT PURGE & RELIEF SYSTEM UNIT 2
JULY 1995

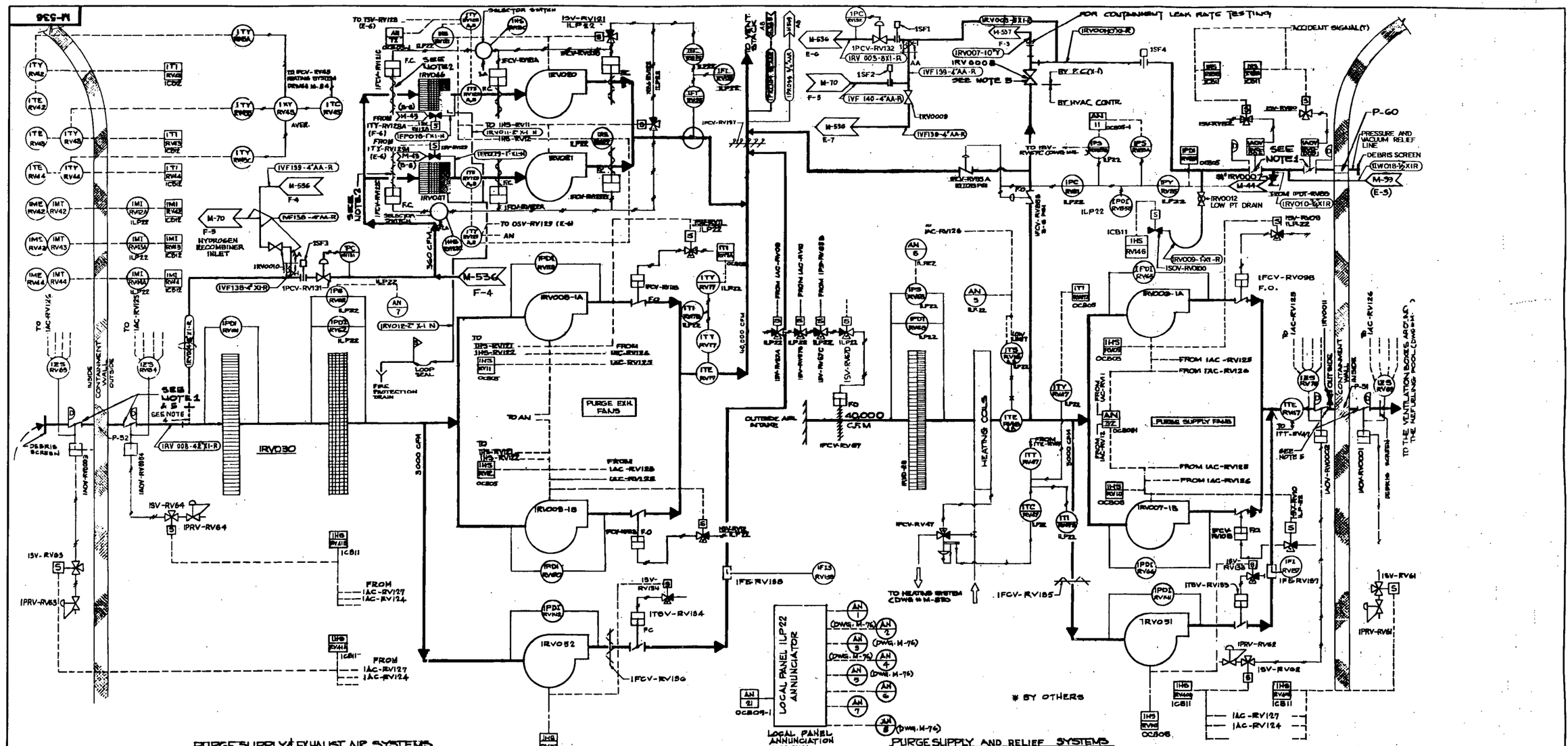

ZION STATION UFSAR

M-536 Rev. AL 08/23/95

Figure 6.2-10(1)

DIAGRAM OF CONTAINMENT PURGE AND RELIEF SYSTEM

MAY 1996

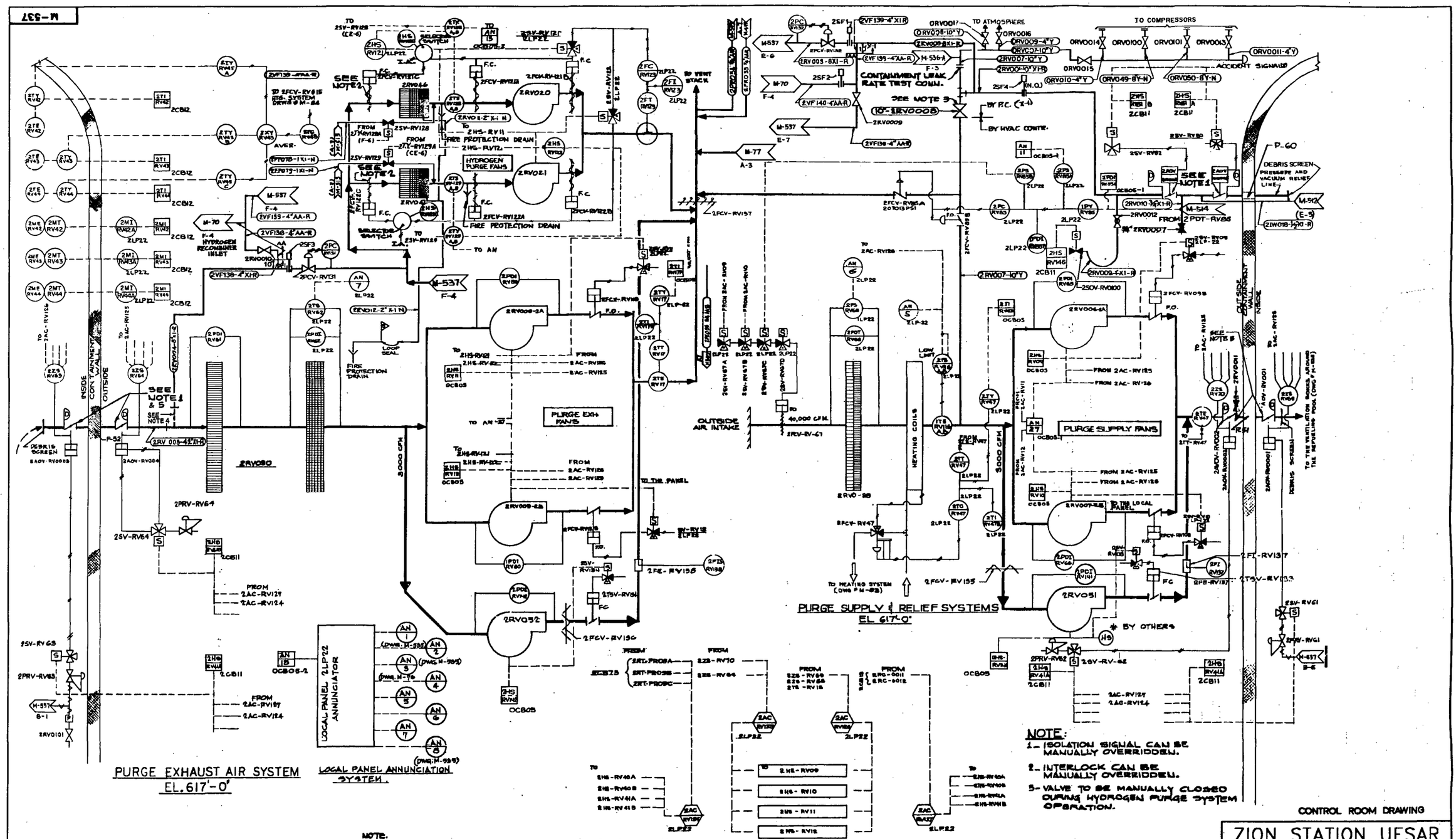
M-537
PURGE EXHAUST AIR SYSTEM
EL. 617'-0"
LOCAL PANEL ANNUNCIATION SYSTEM.
PURGE SUPPLY & RELIEF SYSTEMS
EL 617'-0"
CONTAINMENT ISOLATION
CONTAINMENT LEAK RATE TEST CONN.
PURGE EXH FANS
PURGE SUPPLY FANS
HYDROGEN PURGE FANS
OUTSIDE AIR INTAKE
HEATING COILS
TO COMPRESSORS
ACCIDENT SIGNALS
DEBRIS SCREEN
PRESSURE AND VACUUM RELIEF LINE
SEE NOTE 1
SEE NOTE 2
SEE NOTE 3
SEE NOTE 4
SEE NOTE 5
NOTE:
1- ISOLATION SIGNAL CAN BE MANUALLY OVERRIDDEN.
2- INTERLOCK CAN BE MANUALLY OVERRIDDEN.
3- VALVE TO BE MANUALLY CLOSED DURING HYDROGEN PURGE SYSTEM OPERATION.
NOTE:
4. BOLT BLANK-OFF PLATE WITH 6" PIPE FLANGE CONNECTION TO PURGE EXHAUST DUCT BEFORE OPERATING HYDROGEN PURGE SYSTEM OR HYDROGEN RECOMBINER.
5. A MECHANICAL BLOCK IS INSTALLED ON VALVE TO LIMIT OPENING A MAXIMUM OF 90 DEGREES PER M22-1(2)-85-030.
ASME CODE RELATED AND NUCLEAR SAFETY RELATED ITEMS ARE SHOWN ON THIS DRAWING
FORMERLY M-657-A
CONTROL ROOM DRAWING
ZION STATION UFSAR
M-537 Rev. AM 08/23/95
Figure 6.2-10(2)
DIAGRAM OF CONTAINMENT PURGE & RELIEF SYSTEM UNIT 2
MAY 1996

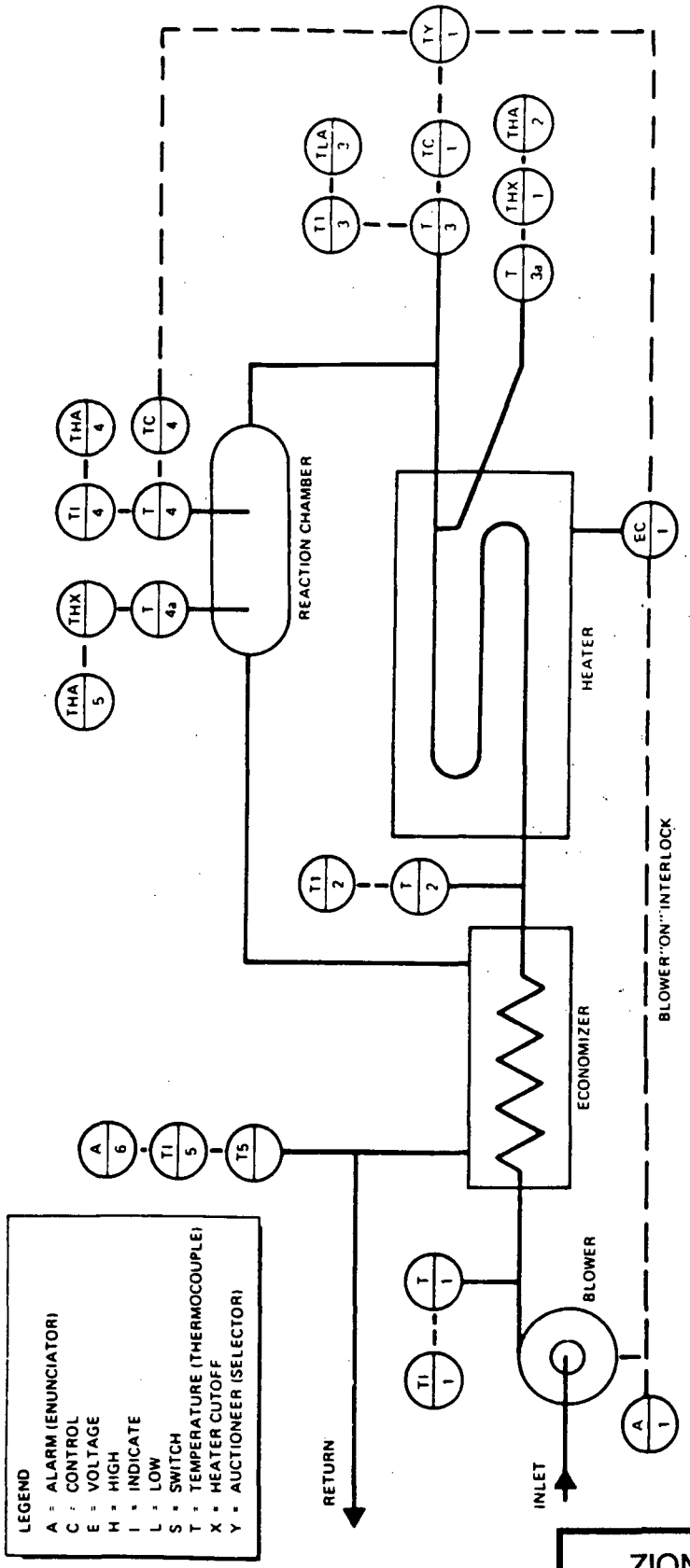

ZION STATION UFSAR

Figure 6.2-11

THERMAL RECOMBINER PIPING AND INSTRUMENTATION FLOW DIAGRAM

6.3 EMERGENCY CORE COOLING SYSTEM

6.3.1 Design Basis

6.3.1.1 Emergency Core Cooling System Capability

Criterion: An Emergency Core Cooling System with the capability for accomplishing adequate emergency core cooling shall be provided. This core cooling system and the core shall be designed to prevent fuel and clad damage that would interfere with the emergency core cooling function and to limit the clad metal-water reaction to acceptable amounts for all sizes of breaks in the reactor coolant piping up to the equivalent of a double-ended rupture of the largest pipe. The performance of such emergency core cooling system shall be evaluated conservatively in each area of uncertainty.

Adequate emergency core cooling is provided by the Emergency Core Cooling System (ECCS) whose components operate in three modes. These modes are delineated as passive accumulator injection, active pumped injection, and active pumped recirculation.

The primary purpose of the ECCS is to automatically deliver cooling water to the reactor core in the event of a loss-of-coolant accident (LOCA). This limits the fuel clad temperature and thereby ensures that the core will remain substantially intact and in place with its heat transfer geometry preserved. This protection is afforded for:

1. All pipe break sizes up to and including the hypothetical instantaneous circumferential rupture of a reactor coolant loop, assuming unobstructed discharge from both ends.

2. A loss of coolant associated with the rod ejection accident.

3. A steam generator tube rupture.

However, the ECCS is designed to meet the criteria provided in 10CFR50.46 (see Reference 1). Under these criteria, the performance of the ECCS is acceptable if the following design bases are met:

1. Peak clad temperatures (PCT) do not exceed 2200°F.

2. The amount of cladding that chemically reacts with the coolant does not exceed 1% of the total Zircaloy in the core.

3. Oxidation of the cladding does not exceed 17% of the original cladding thickness, which precludes embrittlement problems.

4. Calculated changes in core geometry shall be such that the core remains amenable to cooling.

5. After initial operation of the ECCS, core temperature shall be maintained at an acceptably low value and decay heat shall be removed for the extended period required by the long-lived isotopes remaining in the core.

For any rupture of a steam pipe and the associated uncontrolled heat removal from the core, the ECCS adds shutdown reactivity so that with a stuck rod, no offsite power and minimum engineered safety features (ESF), there is no consequential damage to the Reactor Coolant System (RCS) and the core remains in place and intact.

Redundancy, diversity, and segregation of instrumentation and components are incorporated to assure that postulated malfunctions will not impair the ability of the system to meet the design criteria. The system is effective in the event of loss of normal plant auxiliary power coincident with a LOCA and can accommodate the failure of any single component or instrument channel to respond actively in the system. During the recirculation phase of a LOCA, the system can accommodate a loss of any part of the flow path since backup alternative flow path capability is provided.

The ability of the ECCS to meet its design criteria is presented in Section 6.3.3. The analysis of the accidents is presented in Chapter 15.

6.3.1.2 Inspection of the Emergency Core Cooling System

Criterion: Design provisions shall, where practical, be made to facilitate inspection of physical parts of the Emergency Core Cooling System, including reactor vessel internals and water injection nozzles.

Design provisions are made to facilitate access to the critical parts of the reactor internals, injection nozzles, pipes, valves, and ECCS pumps. These provisions allow for visual or boroscopic inspection for erosion, corrosion, and vibration wear evidence and for nondestructive inspection where such techniques are desirable and appropriate.

6.3.1.3 Testing of Emergency Core Cooling System Components

Criterion: Design provisions shall be made so that components of the Emergency Core Cooling System can be tested periodically for operability and functional performance.

The design provides for periodic testing of active components of the ECCS for operability and functional performance.

The Safety Injection (SI) pumps can be tested periodically during plant operation using the minimum flow recirculation lines provided. A centrifugal charging pump is typically in use during normal plant operations. The Residual Heat Removal (RHR) pumps are used every time the RHR loop is put into operation. All remote-operated valves can be exercised and actuation circuits can be tested during routine plant operation.

6.3.1.4 Testing of the Emergency Core Cooling System

Criterion: Capability shall be provided to test periodically the operability of the Emergency Core Cooling System up to a location as close to the core as is practical.

The accumulator tank pressure and level are continuously monitored during plant operation and flow from the tanks can be checked at any time using test lines.

The accumulators and the SI piping up to the final isolation valve are charged with borated water at refueling water boron concentration while the plant is in operation. The accumulators and injection lines will be refilled with borated water as required by using the SI pumps to recirculate refueling water through the injection headers. A small bypass line and a return line are provided for this purpose.

Flows in each of the high head injection header lines and each of the RHR pump headers are monitored by flow indicators. Pressure instrumentation is also provided for the main flow paths of the high head and RHR pumps. Level and pressure instrumentation are provided for each accumulator tank.

6.3.1.5 Testing of Operational Sequence of Emergency Core Cooling System

Criterion: Capability shall be provided to test initially, under conditions as close as practical to design, the full operational sequence that would bring the Emergency Core Cooling System into action, including the transfer to alternate power sources.

The design provides for capability to test initially, to the extent practical, the full operational sequence up to the design conditions for the ECCS to demonstrate the state of readiness and capability of the system. Details of the operational sequence testing are presented in Section 6.3.4.

6.3.1.6 Codes and Classifications

Table 6.3-1 tabulates the codes and standards to which the ECCS components are designed.

6.3.1.7 Service Life Under Accident Conditions

All portions of the system located within the Containment are designed to operate under the most adverse accident conditions without benefit of maintenance and without loss of functional performance for the duration of time the component is required following the accident.

6.3.2 System Design and Operation

6.3.2.1 System Description

Adequate emergency core cooling is provided by the ECCS as shown in Figures 6.3-1 through 6.3-3. These figures illustrate redundancy of components and piping systems.

The operation of the ECCS, following a LOCA, can be divided into two distinct phases:

1. The injection or short term phase in which any reactivity increase attending the accident is terminated, initial cooling of the core is accomplished, and coolant lost from the primary system is replenished; and

2. The recirculation phase in which long term core cooling is provided during the accident recovery period.

A discussion of each phase is given below.

6.3.2.1.1 Injection Phase of Operation

The major equipment involved in the implementation of the injection phase functions are:

1. Two centrifugal charging pumps

2. Two medium head SI pumps

3. Two RHR pumps

4. Four accumulators (one for each loop)

5. Refueling Water Storage Tank (RWST)

The majority of equipment comprising the ECCS are active components which are actuated by any of the following safety injection signals:

1. Low pressurizer pressure

2. High containment pressure

3. High differential pressure between any two steamlines outside Containment

4. High steamline flow in two of four lines in coincidence with either low-low T_{avg} or low steamline pressure

5. Manual Actuation

The exact conditions required to actuate any of the above SI signals are given in the Zion Technical Specifications and are discussed in Section 7.3 of the UFSAR.

The SI signal initiates a reactor trip (this may have already occurred), starts the diesel generators (DGs), opens the charging pump to injection header isolation valves and the charging pump suction motor-operated valves from the RWST, closes the charging pump suction motor-operated valves from the volume control tank (VCT) and the motor-operated charging header isolation valves, and starts the centrifugal charging pumps, the medium head safety injection pumps, and the RHR pumps. The SI signal also produces a Phase A containment isolation (CI) signal which results in the closure of the majority of the automatic CI valves. An SI signal on either unit isolates the control room outside air intake and takes makeup air from the Turbine Room through HEPA filters and charcoal adsorbers.

The active components serve three functions during the injection phase:

1. Provide rapid injection of high concentration chemical poison.

2. Complete the reflooding process for large area ruptures where the initial refill is accomplished by the accumulators.

3. Provide injection for small area ruptures where the primary coolant pressure does not drop below the accumulator pressure for an extended period of time after the accident.

In accident analyses with coincident loss of offsite power, full flow from the active portion of the ECCS occurs at about 25 seconds following the SI signal. This delay time is independent of whether the accumulators have injected.

During the injection phase, the centrifugal charging pumps deliver borated water at the prevailing RCS pressure to the four cold legs of the RCS. The injection points are separate from those used by the accumulators.

The SI pumps take suction from the RWST and deliver borated water to the four cold leg connections via the RHR pump injection lines. These SI pumps develop a maximum discharge pressure of about 1500 psig at shutoff and, as

a result, deliver to the primary system only after its pressure is reduced below this value. Prior to this, they recirculate water back to the RWST.

In the injection mode, the RHR pumps take suction from the RWST and deliver borated water to four cold leg connections. The RHR pumps deliver only when the RCS is depressurized to below about 170 psig.

All active components of the ECCS which operate during the injection phase of a LOCA are located outside the containment system. The ECCS pumps discussed above are located in the Auxiliary Building.

The accumulators, utilizing the stored energy of compressed nitrogen, inject borated water into the cold legs of the RCS piping when the primary system pressure falls below that of the accumulators. One accumulator is provided for each cold leg of the RCS. They are located inside the Containment but outside the missile barrier and are, therefore, protected against possible missiles. Accumulator water level can be adjusted remotely during normal power operation. Borated makeup water from the RWST is added using an SI pump or charging pump. Water level is reduced by draining to the reactor coolant drain tank (RCDT) or a holdup tank. Samples of the solution in the accumulator tanks are taken in the sampling station for periodic checks of boron concentration. Provisions are also included for remote nitrogen makeup. The accumulators are passive components of the injection system because they require no external source of power or signal in order to function.

The relative importance of the various items of injection equipment is dependent upon the size and location of the primary system break. For a large break, the accumulators represent a principle injection mechanism in the sense that they are the first item of equipment to be effective (for a double ended cold leg break, they begin to inject approximately 12 seconds after the break; whereas, the remainder of the system has a time delay associated with it on the order of 25 seconds) and they deliver at a very high flow rate (approximately 15,000 gpm each maximum for a double-ended break).

6.3.2.1.2 Changeover from Injection Phase to Recirculation Phase

The sequence, from the time of the SI signal, for the changeover from the injection phase to the recirculation phase is as follows:

1. First, the low level alarm on the RWST sounds. The changeover from injection to recirculation is initiated at this time by the operator in the control room via a series of valve realignments. At this point, sufficient water has been delivered to the containment, from the containment spray (CS) system and through the RCS break, to provide at least one foot of water above the containment floor. One foot of water above the containment floor provides sufficient volume to sustain the required net positive suction head (NPSH) of the RHR pumps in the recirculation mode of operation.

2. Second, the low-low level alarm on the RWST sounds. At this point, all ECCS pumps that are still taking suction from the RWST, except for one high head pump, are stopped. Changeover from injection to recirculation is continued until a flow path from the recirculation sump to all the ECCS pumps is established. At this time, the ECCS pumps are restarted in the recirculation mode of operation.

Remote-operated valves for the injection phase of the ECCS, which are under manual control, (that is, valves which normally are in their ready position) have their positions indicated by lights on the ready status section of the control board. At any time during operation when one of these valves is not in the ready position for injection, it is shown visually on the board. These valves also receive a confirmatory SI signal, "S", to assure correct positioning for injection. The SI hot leg injection isolation valves (MOV-SI9011A/B) are provided with a three-position spring return to center switch. Therefore, when a switch is mispositioned it self-returns to the intermediate position and arms itself for returning the valve to the normally closed position upon SI actuation. The key lock switches previously installed were replaced because valve cycling would occur if a switch was in the open position during the time of an SI signal.

6.3.2.1.3 Recirculation Phase of Operation

Spilled coolant and injection water, which is collected in the recirculation sump following the injection phase, is recirculated back to the RCS by the RHR, centrifugal charging, and SI pumps. The CS System spray header can be supplied with recirculation water from either of the RHR pumps taking suction from the recirculation sump. A wire mesh over the sump is provided to help prevent material from entering the RHR pump suction. The RCS will be supplied directly from the effluent of the RHR heat exchangers and from each one of the heat exchanger outlets to the suction of the charging and SI pumps, which in turn pump it into the RCS. The water level in the Containment Building during the recirculation phase will be 5 feet 1 inch off the floor elevation (El 568') based on the volume of the RCS, accumulators, and the minimum required volume of the RWST.

The recirculation phase of operation has two modes, cold leg recirculation and simultaneous hot and cold leg recirculation. Initially, the discharge from the RHR pumps flows directly, and via the SI and charging pumps, to the same cold leg injection points used during the injection phase of operation. Later in recirculation, all but the charging pumps are realigned to deliver flow to the hot legs. The SI pumps deliver flow to all four hot legs and the RHR pumps deliver flow to loops A and D hot legs. Injection points into loop A and D hot legs are common to both the SI and RHR pumps. The switch to simultaneous hot and cold leg recirculation is made in order to replace in solution any boron which may have plated out

due to flow conditions existing during the cold leg recirculation phase of ECCS operation.

Since the recirculation phase of the accident begins before the RWST is completely emptied, all pipes are kept filled with water. Water level indication and alarms on the RWST inform the operator that sufficient water has been injected into the Containment to allow initiation of recirculation with the RHR pumps and to provide ample warning to terminate the injection phase while the operating pumps still have adequate NPSH. Two level indicators are provided in the recirculation sump to provide backup indication that injection can be terminated and recirculation initiated.

Redundancy in the external recirculation loop is provided for by the inclusion of duplicate centrifugal SI, RHR, and charging pumps, and RHR heat exchangers. Inside the Containment, the two high-pressure injection systems, the charging and SI System, inject at physically separate positions from each other into each of the four cold legs. The SI pumps also inject into each of the four hot legs. No common headers for either of these systems is located inside Containment.

The low head (RHR) pumps take suction through separate lines from the containment sump and discharge through separate paths to the RCS. This design provides sufficient flow area over the trash curb ahead of the sump and adequate NPSH for the RHR pumps to operate in the recirculation mode.

The lines from the recirculation sump to the suction of the RHR pumps are enclosed within a guardpipe up to the first isolation valve outside the Containment. The valve itself is enclosed in a container. Both the guardpipe and valve container have been designed in accordance with the ASME Boiler and Pressure Vessel (B&PV) Code, Section III (see Reference 2). In the event of a leak in the line, upstream of the valve or in the valve itself, during the recirculation phase of a LOCA, the water will be collected in the guardpipe or container and water will still be available for recirculation. Should a leak occur downstream of the valve, closing the valve will provide isolation.

All Containment painted surfaces are covered with a high quality paint, which will not flake off, go into solution, or otherwise provide interference with the CS System and its capability to maintain cooling of the core following a LOCA. The painted surfaces are covered with an inorganic primer and a modified phenolic finish, respectively $2^1/_2$ to $3^1/_2$ mils and 4 mils thick. Test results by the manufacturer confirm that blistering, flaking, or delamination is not a problem. The coating system meets all criteria of American National Standards Institute (ANSI) Standard N5.9 (see Reference 3) for evaluation of coating systems for nuclear facilities and also the criteria (proposed at the time of license) of ANSI Standard N101.2 (see Reference 4) for coating systems for nuclear

containment facilities, including performance under design basis accident (DBA) conditions.

6.3.2.1.4 Steam or Feedwater Line Break Protection

Following a steam or feedwater line break, the reactor control system, in response to the apparent load increase, would increase reactor power. For larger breaks, an overpower reactor trip would occur. Continued steam blowdown cools the reactor coolant causing a positive reactivity insertion. Analyses described in Chapter 15 indicate that breaks that are large enough to produce a reactivity insertion sufficient to cause a return to criticality produce a depressurization and shrinkage of the RCS coolant which initiates a safety injection. The high pressure delivery of concentrated boric acid by the centrifugal charging pumps would then reestablish adequate shutdown margin even for the case with the highest worth control rod stuck in the fully withdrawn position.

6.3.2.2 Components

See Table 6.3-2 for nondestructive testing of Seismic Class I components.

6.3.2.2.1 Accumulators

The Seismic Class I accumulators are pressure vessels filled with borated water and pressurized with nitrogen gas. During normal plant operation, each accumulator is isolated from the RCS by two check valves in series. Should the RCS pressure fall below the accumulator pressure, the check valves would open and borated water would flow into the RCS. Mechanical operation of the swing-disk check valves due to the pressure differential is the only action required to open the injection path from the accumulators to the core via the cold legs. One accumulator is attached to each of the cold legs of the RCS. Accumulator design parameters are described in Table 6.3-3.

The accumulators are passive engineered safety features because the nitrogen gas pressure forces injection; no external source of power or signal transmission is needed to obtain fast-acting, high-flow capability when the need arises.

The liquid capacity of the accumulators is based on the assumption that even with flow from one of the accumulators spilling onto the containment floor, sufficient water is available to fill the volume outside of the core barrel below the nozzles, the bottom plenum, and portions of the core.

The margin between the minimum operating pressure and design pressure provides a band of acceptable operating conditions within which the accumulator system meets its design core cooling objectives. The band is sufficiently wide to permit the operator to minimize the frequency of adjustments in the amount of contained gas or liquid to compensate for

leakage. Connections are provided for remotely draining or filling the fluid space during normal plant operation.

The accumulator tank discharge isolation valves are provided with red (open) and green (closed) position indicating lights at the control switch for each valve. These lights are powered by valve control power and actuated by valve motor operator limit switches. When the accumulator is required to be operable, the motor-operated valves are placed in the open position with power removed. Therefore, no position indicating light is lighted at the valve switch.

A monitor light is lighted when the valve is not fully open. This light is in an array of monitor lights that are all OFF when their respective valves are in the proper position enabling ESF operation. This grouping highlights a valve not properly lined up. This light is energized from a separate motor light power supply and actuated by a valve motor operator limit switch.

An alarm annunciator point is activated by a valve motor operator limit switch or a redundant valve position limit switch activated by stem travel whenever an accumulator valve is not fully open for any reason with the system at pressure (the pressure at which the SI signal block is unblocked). A separate annunciator point is used for each accumulator valve. This alarm will be recycled at approximately 60-minute intervals to realert the operator of the abnormal valve lineup.

In the event a valve is closed for accumulator or valve testing at the time injection is required, an SI signal is applied to open the valve, overriding the test closure.

6.3.2.2.2 Refueling Water Storage Tank

The Zion plant is equipped with two RWSTs, one for each unit. The RWSTs are reinforced concrete, stainless steel lined, Seismic Class I structures located between the Auxiliary Building and each Containment structure. The tanks are an integral part of the Auxiliary Building concrete structure and have been designed to withstand the dynamic forces of the Operating Basis Earthquake (OBE) and the Design Basis Earthquake (DBE). Under these conditions, there will be no loss of function of the tank or spillage of its contents. The effect of water sloshing within the tank has been considered in determining the seismic loads. Venting of the tanks is accomplished through a 10-inch connection to the atmosphere. The capacity of the RWST is 389,000 gallons. This is based on the requirement for filling the refueling canal and reactor refueling cavity. The minimum required volume of 350,000 gallons provides an ample supply of borated water for the ECCS and CS system during accident conditions and assures:

1. Adequate coolant during the injection phase to meet ECCS design objectives.

2. A sufficient volume of borated refueling water to increase the boron concentration of reactor coolant and recirculation water to a point that assures no return to criticality with the reactor at cold shutdown and all control rods, except the most reactive RCC assembly, inserted into the core.

The water in the tank is borated to a concentration of 2400 ppm to 2600 ppm which assures reactor shutdown by approximately 10% $\Delta k/k$ when all rod cluster control assemblies (RCCAs) are inserted and when the reactor is cooled down for refueling. Each tank is provided with a local sample connection for periodically verifying the concentration of the borated water. Additional borated water can be added to the tank via a connection from the boric acid blender.

Each RWST is provided with liquid level indicators and alarms in the Control Room to inform the operator of system status. An RWST makeup level alarm is actuated when the tank level falls below the normal water level to alert the operator that makeup water is required.

A low level alarm and a low-low level alarm are provided on each tank. The low level alarm alerts the control room that realignment of the ECCS to the recirculation mode of operation should be initiated. When the low-low level alarm is reached, all ECCS pumps taking suction from the RWST, except for one high head pump, are stopped. The borated water remaining in the RWST is used to supply the one running high head pump until it is aligned for cold leg recirculation, and the one running CS pump until the RWST is empty. This action provides assurance that the minimum required volume of NaOH will be sprayed into the containment and that ECCS flow will be maintained during the switchover to cold leg recirculation. The one high head ECCS pump that is left running at the RWST low-low level alarm is stopped when the RWST reaches a level of 5 feet.

The outlet valves on the RWSTs are provided with position indicating lights at the control switch for each valve, red for open and green for closed. These lights are powered by valve control power and actuated by valve motor operator limit switches. When ECCS is required to be operable, the RWST outlet valves to the SI and RHR pumps are placed in the open position with power removed. Therefore, no indicating light is lighted at the valve control switch.

A monitor light is provided for each valve which is on whenever the valve is not fully open. The monitor lights for the valves are provided in an array, thereby highlighting a valve which is in an improper position for ESF operation; i.e., one monitor light on while the rest are out.

An alarm annunciator is activated whenever a valve is not fully open for any reason with the system at pressure (the pressure at which the SI signal block is unblocked). This alarm will be recycled at approximately 60-minute intervals to realert the operator of the abnormal valve lineup. In the event that a valve is closed for tank or valve testing, an SI signal will override the testing signal to open the valve.

The design parameters of this tank are given in Table 6.3-4.

6.3.2.2.3 Emergency Core Cooling System Pumps

6.3.2.2.3.1 Centrifugal Charging Pumps

The two (Seismic Class I) centrifugal charging pumps are horizontal, electric motor, gear-driven, multistage pumps. All parts of the pump in contact with the pumped fluid are stainless steel or equivalent corrosion-resistant material.

A minimum flow bypass line is provided for the pumps to recirculate flow to the VCT or the pump suction manifold. The bypass line is manually isolated by the operator during accident conditions when RCS pressure is less than 1250 psig and RCS subcooling is less than 25°F. The bypass line is opened prior to RCS pressure exceeding 2000 psig.

6.3.2.2.3.2 Safety Injection Pumps

The two (Seismic Class I) SI pumps are horizontal, electric motor, direct-driven, multistage pumps. All parts of the pump in contact with the pumped fluid are stainless steel or equivalent corrosion-resistant material. A minimum flow bypass line is provided on each pump discharge to recirculate flow to the RWST in the event that the RCS pressure is above the shutoff head of the pumps. The minimum flow bypass line remains open during injection and is closed for recirculation.

6.3.2.2.3.3 Residual Heat Removal Pumps

The two (Seismic Class I) RHR pumps are vertical, electric motor-driven, single stage pumps. All parts of the pump in contact with the pumped fluid are stainless steel or equivalent corrosion-resistant material. Pump discharge bypass flow is directed through the RHR heat exchanger before returning to the pump suction.

6.3.2.2.3.4 Emergency Core Cooling System Pumps Design

Design parameters for the ECCS pumps are presented in Table 6.3-5.

The pressure-containing parts of the pumps are stainless steel castings conforming to American Society for Testing and Materials (ASTM) A351, Grade CF8 or CF8M; stainless steel forgings procured per ASTM A182, Grade F304 or F316; or carbon steel forgings to ASTM A181, Grade I, clad with austenitic steel. Parts fabricated of stainless plate are constructed to ASTM A240, Type 304 or 316. All bolting material conforms to ASTM A192 (see References 5 through 9).

Materials such as weld-deposited Stellite are used at points of close running clearances in the pumps to prevent galling and to ensure continued performance ability in high velocity areas subject to erosion. In other cases, wear points are of ASTM A420 grade stainless steel (see Reference 10), heat-treated to give the required antigalling properties.

All pressure-containing parts of the pumps are chemically and physically analyzed and the results are checked to assure conformance with the applicable ASTM specification. In addition, all pressure-containing parts of the pump are liquid penetrant inspected in accordance with the ASME B&PV Code, Section VIII, Appendix 8 (see Reference 11).

Pump design has been reviewed with special attention to the reliability and maintenance aspects of the working components. Specific areas include evaluation of the shaft seal and bearing design to determine that they are adequate for the specified service.

Where welding of pressure-containing parts is necessary, a welding procedure including joint detail is submitted for review and approval by Westinghouse. This procedure includes evidence of qualification necessary for compliance with the ASME B&PV, Section IX, Code Welding Qualifications (see Reference 12). This requirement also applies to any repair welding performed on pressure-containing parts.

The pressure-containing parts of the pump are assembled and hydrostatically tested to 1.5 times the design pressure for 30 minutes.

Each pump is given a complete shop performance test in accordance with Hydraulic Institute Standards. The pumps are run at design flow and head, shutoff head, and three additional points to verify performance characteristics. Where NPSH is critical, this value is established at design flow by means of adjusting suction pressure.

6.3.2.2.4 Residual Heat Removal Heat Exchangers

The two Seismic Class I RHR heat exchangers cool the recirculated sump water. Each heat exchanger is capable of cooldown of the RCS. Table 5.4-20 gives the design parameters of the heat exchangers.

The RHR heat exchangers are designed to the ASME B&PV Code (tube side Section III Class C, shell side Section VIII), and conform to the requirements of Tubular Exchanger Manufactures Association (TEMA) for Class R heat exchangers.

Additional design and inspection provisions include: confined-type gaskets, general construction and mounting brackets suitable for the plant seismic design requirements, tubes and tube sheet capable of withstanding full shell side pressure and temperature with atmospheric pressure on the tube side, ultrasonic inspection in accordance with the ASME B&PV Code,

Section III, Paragraph N-324.3 (see Reference 13) of all tubes before bending, penetrant inspection in accordance with the ASME B&PV Code, Section III, Paragraph N-627 (see Reference 14) of all welds and all hot- or cold-formed parts, a hydrostatic test duration of not less than 30 minutes, the witnessing of hydro and penetrant tests by a qualified inspector, a thorough final inspection of the unit for workmanship and the absence of any gouge marks or other scars that could act as stress concentration points, and a review of the radiographs and of the certified chemical and physical test reports for all materials used in the unit.

The RHR heat exchangers are conventional vertical shell and U-tube-type units. The tubes are seal-welded to the tube sheet. The shell connections are flanged to facilitate shell removal for inspection and cleaning of the tube bundle. Each unit has a SA-515, Grade 70 carbon steel shell; SA-213, Grade TP304, stainless steel tubes; SA-240, Type 304, stainless steel channel; SA-240, Type 304, stainless steel channel cover and a SA-240, Type 304, stainless steel support pad. Tube sheet is of forged steel SA-105, GR.II with 1/4-inch minimum TP-304 weld overlay (see References 15 through 18).

6.3.2.2.5 Emergency Core Cooling System Valves

All parts of valves used in the ECCS in contact with borated water are austenitic stainless steel or equivalent corrosion-resistant material. The motor operators on the injection line isolation valves are capable of rapid operation. All valves required for initiation of safety injection or isolation of the system have remote position indication in the Control Room.

Valving is specified for exceptional tightness and, where appropriate, packless diaphragm valves are used. All valves, except those which perform a control function, are provided with backseats which are capable of limiting leakage to less than 1.0 cc per hour per inch of stem diameter, assuming no credit taken for valve packing. Those valves that are normally open are backseated. Normally-closed globe valves are installed with recirculation flow under the seat to prevent leakage of recirculated water through the valve stem packing. Relief valves are totally enclosed. Control, manual, and motor-operated valves, 2 1/2 inches and above, which are exposed to recirculation flow, are provided with double-packed stuffing boxes and stem leakoff connections which are piped to the Waste Disposal System, or are equipped with a 5-ring set of packing and carbon spacer with the leakoff line removed. Valves with two-inch diameters and smaller in this classification are either globe-type or diaphragm-type, the latter type isolates the bonnet and stem precluding steam leakage. The globe valves backseat and have small stem areas which minimize or eliminate stem leakage. The environmental effect of leakage from valves with two-inch diameters and smaller is, therefore, considered to be inconsequential.

In the original design by Westinghouse, 8 ECCS valves were designed to operate under a differential pressure equal to the RCS pressure. These valves, located in the ECCS pump discharge headers between the CI check valves and the ECCS pumps, are not normally subjected to RCS pressure. Calculations were performed which developed the design basis differential pressures that all Generic Letter 89-10 valves would be required to operate against. These calculations reduced the differential pressures below RCS pressures by taking into account the redundant CI check valves, and expected system pressures. By reducing the differential pressures, the stresses being imposed on these valves by the motor operators were reduced. Although these valves are not currently required to operate under a differential pressure equal to the RCS, these valves continue to maintain their design conditions of full RCS pressure and temperature for pressure integrity. Information about these valves is contained in Table 6.3-11.

The check valves that isolate the ECCS from the RCS are installed near the RCS piping to reduce the probability of an injection line rupture causing a LOCA.

6.3.2.2.5.1 Relief Valves

The medium head SI piping is protected by two relief valves. The relieving capacity of these valves is based on a flow several times greater than the expected leakage rate through the check valves. These valves relieve to the pressurizer relief tank (PRT).

The RHR loop is protected by four relief valves which are relieved to the PRT:

1. one on the header from the RCS to the pumps;
2. two on the cold leg injection headers; and
3. one on the hot leg return header.

The accumulator relief valves protect them from pressures in excess of the design value.

The accumulator relief valves are sized to pass nitrogen gas at a rate in excess of the accumulator gas fill line delivery rate. The relief valves will also pass water in excess of the expected leak rate, but this is not necessary because the time required to fill the gas space gives the operator ample opportunity to correct the situation. For an inleakage rate 15 times the manufacturing test rate, there will be in excess of 1000 days before water will reach the relief valves. Prior to this, level and pressure alarms would have been actuated.

The SI test line relief valve is provided to relieve any pressure, above design, that might build up in the high head SI piping. The valve will pass a flow rate which is far in excess of the manufacturing design leak rate of 24 cc/hr.

6.3.2.2.5.2 Motor-Operated Valves

The pressure-containing parts (body, bonnet, and disks) of the motor-operated valves employed in the SI System are designed per criteria established by the ANSI B16.5 (see Reference 19) or Manufacturers Standardization Society (MSS) SP-66 (see Reference 20) specifications. The materials of construction for these parts are procured per References 5 and 6. All material in contact with the primary fluid, except the packing, is austenitic stainless steel or equivalent corrosion-resisting material. The pressure-containing cast components are radiographically inspected as outlined in ASTM E-71 Class 1 or Class 2 (see Reference 21). The body, bonnet, and disks are liquid penetrant inspected.

When a gasket is employed, the body-to-bonnet joint is designed per ASME B&PV Code, Section VIII or ANSI B16.5 (see References 22 and 19) with a fully trapped, controlled compression, spiral wound asbestos gasket or equivalent substitute with provisions for seal welding, or the pressure seal design with provisions for seal welding. The body-to-bonnet bolting

and nut materials are procured per ASTM A 193 and A 194, respectively (see References 9 and 23). The entire assembled unit is hydrotested as outlined in MSS SP-61 (see Reference 24) with the exception that the test is maintained for a minimum period of 30 minutes. Any leakage is cause for rejection.

The seating design is of the Darling parallel disk design, the Crane flexible wedge design, or the equivalent. These designs have the feature of releasing the mechanical holding force during the first increment of travel. Thus, the motor operator has to work only against the frictional component of the hydraulic unbalance on the disk and the packing box friction. The disks are guided throughout the full disk travel to prevent chattering and provide ease-of-gate movement. The seating surfaces are hard faced (Stellite No. 6 or equivalent) to prevent galling and reduce wear.

The stem material is ASTM A 276, Type 316 Condition B (see Reference 25) or precipitation-hardened 17-4 PH stainless, procured and heat-treated to Westinghouse specifications. These materials are selected because of their corrosion resistance, high tensile properties, and their resistance to surface scoring by the packing. The valve stuffing box of motor-operated valves having leakoff is designed with a lantern ring leakoff connection with a minimum of a full set of packing below the lantern ring; a full set of packing is defined as a depth of packing equal to $1^1/_2$ times the stem diameter. The experience with this stuffing box design and the selection of packing and stem materials have been very favorable in both conventional and nuclear power plants.

Limitorque motor operators are extremely rugged and are noted throughout the power industry for their reliability. The units incorporate a "hammer blow" feature that allows the motor to attain its operational speed before engagement between the worm gear and drive sleeve. The "hammer blow" feature allows the motor to impact the disks away from the fore or backseat upon opening or closing.

Each valve is assembled, hydrostatically tested, seat leakage tested (fore and back), operationally tested, cleaned, and packaged per specifications. All manufacturing procedures employed by the valve supplier, such as hard facing, welding, repair welding, and testing, are reviewed in accordance with Zion's Quality Assurance Program.

For fast-operated valves of sizes up to and including 8 inches, 10-second maximum (select valves have been evaluated to allow for stroke times of 12.5 seconds maximum) operators are provided. For all fast operated valves above 8 inches the operating speed is 49 inches/minute. For slow operators, 12 inches/minute is specified for valves up to and including 8-inch/size. For all slow valves above size 8 inches, 120 seconds maximum operating time is specified.

Valves which must function against system pressure are designed such that they function with a pressure drop equal to full system pressure across the valve disk.

6.3.2.2.5.3 Manual Valves

The stainless steel manual globe, gate, and check valves are designed and built in accordance with the requirements outlined in the motor-operated valve description above.

The carbon steel valves are built to conform with ANSI B16.5 (see Reference 19). The materials of construction of the body, bonnet, and disk conform to the requirements of ASTM A105 Grade II; A181, Grade II or A216, Grade WCB or WCC (see References 26, 27 and 28). The carbon steel valves pass only nonradioactive fluids and are subjected to hydrostatic test as outlined in MSS SP-61 except that the test pressure is maintained for at least 30 minutes. Since the fluid controlled by the carbon steel valves is not radioactive, the double packing and seal weld provisions are not provided.

6.3.2.2.5.4 Accumulator Check Valves

The pressure containing parts of these valve assemblies are designed in accordance with References 2 and 20. All parts in contact with the operating fluid are of austenitic stainless steel or of equivalent corrosion-resistant materials procured to applicable ASTM or WAPD specifications. The cast pressure-containing parts are radiographed in accordance with ASTM E-94 (see Reference 29) and the acceptance standard as outlined in ASTM E-71 (see Reference 21). The cast pressure-containing parts, machined surfaces, finished hard facings, and gasket bearing surfaces are liquid penetrant inspected per ASME Pump & Valve (P&V) Code and the acceptance standard is as outlined in the ASME P&V Code. The final valves are hydrotested per Reference 20 except that the test pressure is maintained for at least 30 minutes. The seat leakage shop test is conducted in accordance with the manner prescribed in Reference 24 except the acceptable leakage is 3 cc/hr/in. nominal pipe diameter. A field installed system is available to determine if gross leakage occurs.

The valves are designed with a low pressure drop configuration with all operating parts contained within the body, which eliminates those problems associated with packing glands exposed to boric acid. The clapper arm shaft is manufactured from 17-4 PH stainless steel heat treated to Westinghouse Specifications. The clapper arm shaft bushings are manufactured from Stellite No. 6 material. The various working parts are selected for their corrosion-resistant, tensile strength, and bearing properties.

The disk and seat rings are manufactured from forgings. The mating surfaces are hard faced with Stellite No. 6 to improve the valve seating

life. The disk is permitted to rotate, providing a new seating surface after each valve opening.

The valves are intended to be operated in the closed position with a normal differential pressure across the disk of approximately 1600 psi. The valves will remain in this position except for testing and safety injection. Normally, the valves will not be required to operate in the open condition and, hence, be subjected to impact loads caused by sudden flow reversal.

6.3.2.2.5.5 Leakage Limitations

The specified leakage across the valve disk during shop testing required to meet the equipment procurement specifications is as follows:

1. Conventional globe - 3 cc/hr/in. of nominal pipe size

2. Gate valves - 3 cc/hr/in. of nominal pipe size; 10 cc/hr/in. for 300 and 150 pound ANI Standard

3. Motor-operated gate valves - 3 cc/hr/in. of nominal pipe size; 10 cc/hr/in. for 300 and 150 pound ANI Standard

4. Check valves - 3 cc/hr/in. of nominal pipe size; 10 cc/hr/in. for 300 and 150 pound ANI Standard

6.3.2.2.6 Emergency Core Cooling System Piping

All ECCS piping in contact with borated water is austenitic stainless steel. All major piping joints are welded except for the flanged connections at pumps.

The piping beyond the accumulator stop valves is designed for RCS conditions.

The ECCS pump suction piping from the RWST is designed for low pressure losses to meet NPSH requirements of the pumps.

The SI high pressure branch lines are designed for high pressure losses to limit the flow rate out of the branch line in the event of rupture at the connection to the reactor coolant loop. The branch lines are sized so that a break will not result in a violation of the design criteria for the ECCS.

The piping is designed to meet the requirements set forth in (1) the ANSI B31.1 Code for Power Piping, (2) ANSI Standards B36.1 and B36.19 (see References 30, 31, and 32), and (3) ASTM Standards.

Pipe fittings materials are procured in conformance with all requirements of the latest ASTM and ANSI specifications at the time of construction.

All materials are verified for conformance to specifications and documented by certification of compliance to ASTM material requirements. Specifications impose additional quality control upon the suppliers of pipes and fittings as listed below.

1. Check analyses are performed on both the purchased pipe and fittings.

2. Pipe branch lines between the reactor coolant pipes and the isolation stop valves conform to ASTM A376 (see Reference 33) and meet the supplementary requirement S6 covering an ultrasonic test on 100% of the pipe wall volume.

3. Pipe fittings conform to the requirements of ASTM A403 (see Reference 34); fittings 3 inches and above have requirements for UT inspection similar to S6 of ASTM A376 (see Reference 33).

4. ECCS piping from the reactor coolant loops to the first valve has been radiographed in accordance with the ASME B&PV Code, Section VIII, Appendix 9 (see Reference 35). The remainder of the ECCS piping has been radiographed in accordance with the ASME B&PV Code, Section VIII, Paragraph UW-51 (see Reference 36).

Shop fabrication of piping subassemblies is performed by reputable suppliers in accordance with specifications which define and govern material procurement, detailed design, shop fabrication, cleaning, inspection, identification, packaging, and shipment.

Welds for pipes sized $2^1/_2$ inches and larger are of the full-penetration type. Reducing tees are used where the branch size exceeds $^1/_2$ of the header size. All welding is performed by welders and welding procedures qualified in accordance with the ASME B&PV Code Section IX, Welding Qualifications (see Reference 12).

All high-pressure piping butt welds containing radioactive fluid, at greater than 600°F temperature and 600 psig pressure or equivalent, are radiographed. The remaining piping butt welds are randomly radiographed. The technique and acceptance standards are those outlined in ASME B&PV Code, Section VIII, Paragraph UW-51 (see Reference 36). In addition, butt welds are liquid penetrant examined in accordance with the procedure of ASME B&PV Code, Section VIII, Appendix 8 (see Reference 11) and the acceptance standard as defined in the ANSI Nuclear Code Case N-10 (see Reference 37). Finished branch welds are liquid penetrant examined on the outside and, where size permits, on the inside root surfaces.

A postbending solution anneal heat treatment is performed on hot-formed stainless steel pipe bends. Completed bends are then completely cleaned of oxidation from all affected surfaces. The shop fabricator is required to

submit the bending, heat treatment, and cleanup procedures for review and approval prior to release for fabrication.

General cleaning of completed piping subassemblies (inside and outside surfaces) is governed by basic ground rules set forth in the specifications. For example, these specifications prohibit the use of hydrochloric acid and limit the chloride content of service water and demineralized water.

Packaging of the piping subassemblies for shipment is done so as to preclude damage during transit and storage. Openings are closed and sealed with tight-fitting covers to prevent entry of moisture and foreign material. Flange facings and weld end preparations are protected from damage by means of cover plates and securely fastened in position. The packing arrangement proposed by the shop fabricator is subject to approval.

6.3.2.2.7 Pump and Valve Motors

Motor electrical insulation systems are supplied in accordance with ANSI, IEEE, and National Electrical Manufacturers Association (NEMA) standards and are tested as required by such standards. Temperature rise design selection is such that normal long life is achieved even under accident loading conditions.

Criteria for motors of the ECCS require that, under normal conditions, the motors operate below their nameplate rated horsepower, i.e. below a 1.0 service factor. For other anticipated operating modes, the motors do not exceed the maximum rating allowed by the nameplate, including their specified 1.15 service factor.

6.3.2.2.8 Valve Motor Operators

Tests have been conducted which demonstrate the adequacy of valve motor operators to be functional after exposure to high temperatures, pressures, and radiation. The results of the tests are confirmed in WCAP-7744 (see Reference 38), which was filed with the AEC.

6.3.2.3 Protection Against the Dynamic Effects of An Accident

6.3.2.3.1 Criteria

Protection in the form of barriers, restraints, supports, and physical separation has been provided to assure that, in the unlikely event of an accident, the following criteria will be met:

1. Containment integrity will be maintained throughout the accident.

2. A second accident will not occur as a result of the original accident.

3. Sufficient ESF will be available to control the accident and safely shut the plant down.

For the purpose of the above criteria, an accident is defined as the rupture of a pipe in any one of the following systems:

1. RCS (LOCA).

2. Main steam system, from each steam generator up to and including the first isolation valve outside the Containment.

3. Feedwater system, from each steam generator up to and including the first isolation valve outside the Containment.

6.3.2.3.2 Dynamic Effects

Protection has been provided against the following dynamic effects:

1. Jet forces resulting from the release of high-pressure steam or water from a ruptured line.

2. Pipe whip caused by the formation of a plastic hinge in a pipe due to a rupture somewhere else in the same pipe.

3. Missiles which can be generated in coincidence with an accident.

Water hammer and valve closure analyses have not been performed for the following reasons:

1. Pump discharge lines on ECCS and other essential systems will be initially filled and will remain full. The water level in the RWST, being higher in elevation than the SI line check valves at the reactor coolant loops, makes it impossible to drain the lines back into the tank.

   Although the CS System pump discharge will be empty, this system has been successfully tested at full-flow with an empty discharge line.

2. The only valve closure forces significant enough to affect essential components are those associated with the main steam isolation check valves. These forces have been considered along with the pipe rupture forces in the design of the main steam containment penetration anchor.

6.3.2.3.3 Barriers

The polar crane wall serves as a barrier between the reactor coolant loops and the containment liner. In addition, the refueling cavity walls, various structural beams, the operating floor, and the crane wall enclose

each reactor coolant loop into a separate compartment, thereby preventing an accident in any loop from affecting another loop or the Containment.

The Seismic Class I portion of the steam and feedwater lines from each steam generator have been routed behind barriers which separate these lines from the steam and feedwater lines from all other steam generators, as well as from all reactor coolant piping.

The barriers described above will withstand loadings caused by jet forces, pipe whip impact forces, or the generation of all credible missiles coincident with an accident.

All equipment inside the Containment required for safe shutdown in the event of an accident has been located between the crane wall and the containment wall and is, thereby, protected from all dynamic effects of an accident. Section 3.5 contains a more detailed discussion on missile protection within the Containment structure.

6.3.2.3.4 Restraints

All lines connected to the reactor coolant loop which penetrate the containment wall have been anchored to the crane wall. Each anchor has been designed to be stronger than the pipe. Should a reactor coolant loop rupture occur, the resulting jet force will, therefore, not be transferred to the containment wall through any branch lines.

Main steam and feedwater lines have been anchored outside the Containment so that a rupture anywhere in the line will not affect containment integrity. These lines have also been restrained inside the Containment to prevent whipping.

6.3.2.3.5 Supports

Major components of the RCS (vessel, steam generators, pumps) have been supported to isolate the effects of an initial rupture so that a second accident cannot occur. These support systems have been described in detail in Section 5.4.

6.3.2.3.6 Physical Separation

Physical separation has been accomplished primarily by placing redundant essential equipment on either side of a barrier so that one, but not both items, may be vulnerable to missiles, jet forces, and pipe whip.

ESF lines serving the RCS have been routed so that main headers are located outside the crane wall and are not vulnerable to any dynamic effects. Branch lines serving an individual loop penetrate the crane wall as close to the loop as possible. In this manner, branch lines serving unaffected

loops will not be damaged by the loop in which an accident may have occurred.

6.3.2.3.7 Tornado Protection

All essential equipment has either been designed to withstand a credible tornado, including a single large missile generated thereby, or has been placed in a structure which will withstand the tornado and missile. If sufficient redundancy exists, equipment may be physically separated without protection against tornado missiles.

6.3.3 Performance Evaluation

6.3.3.1 Design Features

Specific design features of the ECCS assure its ability to meet single active or passive failures as discussed in Section 6.0.1 and to deliver borated cooled water rapidly to the reactor. These features include:

1. Two centrifugal charging pumps are included in the injection system to deliver into the four cold legs through 1.5-inch diameter lines. During recirculation, the two charging pumps will supply flow from the recirculation sump (via the RHR pumps) to the four cold legs through these same lines. Accumulator injection into the four cold legs is through piping and connections completely independent of the charging pumps.

2. Two SI pumps are included in the injection system to deliver to the four cold legs via the RHR injection lines during the injection phase and initial portion of the recirculation phase. Later, in the recirculation phase of operation, flow from each pump will be directed via a 4-inch header to two hot leg injection points (one per leg) in order that subcooling of the core can be completed. These two headers are redundant to assure at least one pump can deliver flow even in the case of a passive failure in one line. During recirculation operation, the SI pumps (as well as the charging pumps mentioned previously) take suction from the recirculation sump via the RHR pump discharge. A crosstie connection from the suction of the charging to the suction of the SI pumps is also available to ensure that during recirculation, with either a passive or an active failure, at least one charging and one SI pump will deliver and can be supplied from either RHR pump.

3. Two RHR pumps are included in the injection system to deliver flow to the four cold leg injection points (one on each loop) during the injection phase and initial portion of the recirculation phase of operation. During the initial recirculation phase, the RHR pumps take suction from the recirculation sump and provide flow to the core and

to the suction of the charging and SI pumps and the CS System. Later, in the recirculation period, the injection flow provided directly by the RHR pumps will be redirected from the cold legs to two hot leg connections in order to complete subcooling of the core.

Thus, injection flow of borated water from the RWST is provided to all four RCS cold legs from the three pumping systems. During the recirculation phase of the accident, all three pumping systems are capable of providing recirculation sump fluid flow to all four cold legs with the RHR pumps providing flow to the SI pumps and charging pumps. The capability of long term recirculation flow to the RCS hot legs is provided from both the RHR and the SI pumps.

6.3.3.2 Range of Core Protection

The measure of effectiveness of the ECCS is its ability to fulfill the clad temperature and metal-water reaction criteria discussed in Section 6.3.1.1 for any possible pipe break size at any location in the primary system. To demonstrate the adequacy of the system for this plant, a number of pipe break sizes and locations were analyzed and the results are discussed in Chapter 15. Simulation of a sufficient number of break sizes were performed to demonstrate that the ECCS components meet the emergency core cooling requirements.

6.3.3.3 System Response

To provide protection for large area ruptures of the RCS, the ECCS must respond to rapidly reflood the core following the depressurization and core voiding that is characteristic of large area ruptures. The accumulators act to perform the rapid reflooding function with no dependence on the normal or emergency power sources, and also with no dependence on the receipt of an actuation signal. With three of the four available accumulators delivering their contents to the RCS, the peak clad temperature is maintained $\leq$ 2200°F.

The function of the centrifugal charging, SI, or RHR pumps is to complete the refill of the vessel and ultimately return the core to a subcooled state. However, the starting sequence of the ECCS pumps and the related emergency power equipment is designed so that delivery of the required flow is reached by the time required per analysis.

For the large break LOCA analysis, delivery of pumped ECCS flow is assumed to occur 31 seconds after SI signal generation, including 15 seconds for startup of the diesel generator. For the small break LOCA analysis, delivery of pumped ECCS flow is assumed to occur 40 seconds after SI signal generation, including 25 seconds for startup of the diesel generator. For non-LOCA analysis, delivery of pumped ECCS flow is assumed to occur 47 seconds after SI signal generation, including 20 seconds for startup of the diesel generator.

The starting sequence is discussed in detail in Chapter 8.

The surveillance requirement to meet the large break LOCA analysis assumptions is for pumped ECCS to reach full flow 32 seconds after SI signal generation. The sequence resulting in full flow in 32 seconds is based on 2.0 seconds to electronically process the SI signal initiating the start of the diesel generators, 15 seconds assumed for diesel generators reaching speed and voltage to accept load, plus 5 seconds required for each pump to reach high enough speed to permit loading of the next pump or piece of electrical equipment. These timing assumptions are shown in Table 6.3-12. Credit for integrated delivery of flow from the charging and SI pumps prior to 32 seconds can be used to reduce the full flow start time in the LOCA analysis since the analysis does not model flow delivery until the full delay time has expired (Reference 39).

6.3.3.4 Failure Analysis

Separate single failure analyses were performed for both the injection and recirculation phases of an accident. Two basic types of failure were considered:

1. Active Failure - which is defined as the inability of any single dynamic component or instrument to perform its design function when called upon to do so by the proper actuation signal. Such functions include change of position of a valve or electrical breaker, operation of a pump, fan, or diesel generator, etc.

2. Passive Failure - which is defined as a failure affecting a device involved with the transport of fluid which limits its effectiveness in carrying out its design function. Most passive failures involve the development of abnormal leakage in valve stem packings, pump seals, etc., although passive failures concerned with abnormal flow restriction in lines are also considered.

Table 6.3-6 summarizes the results of the single failure analysis applied during the injection phase. All failures during this phase are assumed to be active failures. It is during this phase that the pumps are starting and automatic isolation valves are required to move. All credible active failures are considered and are included in the accident analyses described in Chapter 15.

The accumulators, which are a principle factor of the ECCS system, are not subject to active failure. The only moving parts in each accumulator injection train are the two check valves. The working parts of the check valves are exposed to fluid of relatively low boric acid concentration. Even if some unforseen deposition accumulated, calculations indicate that a reversed differential pressure of about 25 psi can shear any particles in the bearing surfaces that may tend to prevent valve functioning.

For each accumulator, one of the two check valves is maintained in the closed position by a nominal differential pressure across the disk of approximately 1600 psi. They remain in this position except when called upon to function. Since the valves normally operate in the closed position and are, therefore, not subject to the abuse of flowing operation or impact loads caused by sudden flow reversal and seating, their moving parts experience negligible wear and the valves can be expected to function as required.

When the RCS is being pressurized during the normal plant heatup operation following refueling, the check valves are tested for leakage. This test confirms the seating of the disk and provides a qualitative gross leakage indication. When this test is completed, the discharge line test valves are shut and the RCS pressure increase continued. There should be no increase in leakage from this point on since increasing reactor coolant pressure increases the seating force and decreases the probability of leakage. When RCS reaches normal operating pressure, the backup check valves are tested for backleakage.

The accumulators can accept some leakage from the RCS without compromising their availability. Table 6.3-7 indicates the frequency that the accumulator level would have to be readjusted as a function of leakage rate. An accumulator can be isolated with a motor-operated valve if leakage becomes excessive. This action restricts unit operation according to Technical Specifications.

Tables 6.3-6 and 6.3-8 summarize the single failure analyses of injection and recirculation phases.

Table 6.3-9 gives the leakage in the recirculation loop assumed for the analysis.

6.3.3.5 Emergency Flow to the Core

Special attention is given to factors that could adversely affect the accumulator and SI flow to the core. These factors are considered in Chapter 15.

6.3.3.6 Safety Limits and Conditions

6.3.3.6.1 Limiting Conditions for Operation

The limiting conditions for operation are detailed in the Technical Specifications. These conditions apply to both active components and coolant storage components of the ECCS.

The plant will not be operated at power with the isolation valves in the accumulator lines closed except for brief periods to test the seating effectiveness of the injection line check valve. This would be done on one accumulator at a time by depressurizing the pipe between the check valve and the accumulator and checking for gross leakage. This test will be routinely performed when the reactor is being returned to power after a refueling and the reactor pressure is raised above the accumulator pressure. If leakage through a check valve should become excessive, the isolation valve would be closed and an orderly shutdown initiated to repair the check valve. The performance of the check valves in this application has been carefully studied and it is concluded that it is highly unlikely that an accumulator line would have to be closed because of leakage. Operation performance has verified this.

6.3.4 Tests and Inspections

All active and passive components of the ECCS are inspected periodically to demonstrate system readiness.

The Technical Specifications establish limiting conditions for operation and surveillance requirements for ECCS components for the various modes of plant operation. Routine servicing and maintenance of ECCS equipment would generally be scheduled for periods of refueling and maintenance outages.

The pressure-containing systems are inspected for leaks from pump seals, valve packing, flanged joints, and safety valves during system testing. In addition, to the extent practical, the critical parts of the injection nozzles, pipes, valves, and SI pumps are inspected for erosion, corrosion, and vibration wear evidence.

See Section 6.6 for more information on the Inservice Inspection Program.

6.3.4.1 Components Testing

Performance tests of the components are performed in the manufacturer's shop. An initial system flow test demonstrates proper functioning of the system. Thereafter, periodic tests demonstrate that components are functioning properly.

Each active component of the ECCS may be actuated on the normal power source at any time during plant operation to demonstrate operability. The

Technical Specifications and UFSAR Chapter 16 outline the component test program for the ECCS. The test of the SI pumps employs the minimum flow recirculation test line which connects back to the RWST. Remote operated valves are exercised and actuation circuits tested. The automatic actuation circuitry, valves, and pump breakers also may be checked during integrated system tests performed when the plant is cooled down and the RHR loop is in operation.

Test lines are provided to periodically check for gross leakage back through the check valves and to ascertain that these valves seat whenever the RCS pressure is raised.

6.3.4.2 System Testing

Testing can be conducted during plant shutdown to demonstrate proper automatic operation of the ECCS. For such a test, a test signal is applied to initiate automatic action. The test demonstrates the operation of the valves, pump circuit breakers, and automatic circuitry. A flow balance test is also performed while the unit is shutdown for refueling in accordance with the requirements of the Technical Specifications.

The performance of the RHR pumps is verified by their operation each time the plant is cooled down. Performance of the centrifugal charging pumps is verified by their operation during normal plant operation and cooldown. Starting of these pumps by an SI signal can also be verified during plant shutdown.

Such tests are considered satisfactory if control board indication and visual observations indicate all components have operated and sequenced properly.

The periodic testing of pumps in the Emergency Core Cooling and Containment Spray Systems requires withdrawal of water from the RWST. Demonstration of proper operation of these pumps will also demonstrate the operability of the line from the RWST. Testing procedures will be employed to assure that the motor-operated isolation valves will function normally. Flushing procedures will be employed to preclude blockage.

The accumulator pressure and level are continuously monitored during plant operation. Flow from the tanks can be checked at any time using test lines.

The accumulators and the injection piping up to the final isolation valve are maintained full of borated water while the plant is in operation. The concentration is checked periodically by sampling. The accumulators and injection lines are refilled with borated water as required by using the SI pumps or charging pumps to recirculate refueling water through the injection lines. A small test line is provided for this purpose in each injection header.

Flows in each of the SI, centrifugal charging, and RHR pumps injection headers are monitored by flow instrumentation. Pressure instrumentation is also provided for the main flow paths of the SI and RHR pumps.

6.3.4.3 Full Flow Emergency Core Cooling System Test (Preoperational)

6.3.4.3.1 Scope of Test

The purpose of this test was to demonstrate that the ECCS, including the charging pumps, and the RHR System will properly function as designed.

6.3.4.3.2 Test Objectives

1. Determine the total integrated flow rate to the reactor vessel from the ECCS.

2. Verify the capability of the ECCS to operate over an extended period of time, as designed.

6.3.4.3.3 System Modifications for Test

Minor electrical modifications were required to allow the defeat of certain selected motor-operated valves and other motors in response to an SI signal. This defeat applied to those components not required for the ECCS test.

The refueling seal at the reactor flange had to be installed, and the blank flange on the buried pipe from the refueling cavity to the recirculation pump had to be removed and the appropriate pipe and valves added.

6.3.4.3.4 General Test Method

This test was performed after the initial system checkouts had been satisfactorily completed but prior to installation of the reactor vessel head. The RCS was filled to the level of the reactor vessel nozzles. The test was initiated by manually actuating an SI signal into the Reactor Protective System (RPS). The SI pumps, charging pumps, and RHR pumps operate in normal response to an SI signal. After the RWST was depleted, operation of the RHR System was continued in the recirculation mode for a period of eight hours to verify proper operation in this mode. The Boron Injection Tank (BIT) on the charging pump line was filled with demineralized water as was the RWST. Table 6.3-10 provides the historical BIT design parameters.

Flow rates and pump discharge pressures in the ECCS were determined. Pump, heat exchanger, and valve operation was monitored.

6.3.4.3.5 Test Results

The results of the ECCS Full Flow Preoperational Test were acceptable. The following items were checked for proper operation during the test:

ECCS pumps initiate from ESF signals
Valve alignment
Control room alarms
System interlocks

The total integrated flow rate to the reactor vessel was calculated for each active mode of ECCS operation and found to be within acceptable design limits.

The original preoperational test data is maintained in the Station's files.

6.3.5 References, Section 6.3

1. 10CFR50.46, Acceptance Criteria for Emergency Core Cooling Systems for Light Water Nuclear Power Reactors

2. ASME Boiler and Pressure Vessel Code, Section III, Rules for Construction of Nuclear Power Plant Components

3. ANSI Standard N5.9

4. ANSI Standard N101.2

5. ASTM A 351, Standard Specification for Castings, Austenitic, Austenitic-Ferritic (Duplex), for Pressure-Containing Parts

6. ASTM A 182, Standard Specification for Forged or Rolled Alloy-Steel Pipe Flanges, Forged Fittings, and Valves and Parts for High-Temperature Service

7. ASTM A 181, Standard Specification for Forgings, Carbon Steel, for General-Purpose Piping

8. ASTM A 240, Standard Specification for Heat-Resisting Chromium and Chromium-Nickel Stainless Steel Plate, Sheet, and Strip for Pressure Vessels

9. ASTM A 193, Standard Specification for Alloy-Steel and Stainless Steel Bolting Materials for High-Temperature Service

10. ASTM A 420, Standard Specification for Piping Fittings of Wrought Carbon Steel and Alloy Steel for Low-Temperature Service

11. ASME Boiler and Pressure Vessel Code, Section VIII, Appendix 8, Methods for Liquid Penetrant Examination (PT)

12. ASME Boiler and Pressure Vessel Code, Section IX, Welding and Brazing Qualifications

13. ASME Boiler and Pressure Vessel Code, Section III, Paragraph N-324.3, Ultrasonic Examination

14. ASME Boiler and Pressure Vessel Code, Section III, Paragraph N-627, Liquid Penetrant Examination

15. ASME Boiler and Pressure Vessel Code, Section II, Part A, SA-515, Specification for Pressure Vessel Plates, Carbon Steel, for Intermediate- and High-Temperature Service

16. ASME Boiler and Pressure Vessel Code, Section II, Part A, SA-213, Specification for Seamless Ferritic and Austenitic Alloy Steel Boiler, Superheater, and Heat Exchanger Tubes

17. ASME Boiler and Pressure Vessel Code, Section II, Part A, SA-240, Specification for Heat-Resisting Chromium and Chromium Nickel Stainless Steel Plate, Sheet, and Strip for Pressure Vessels

18. ASME Boiler and Pressure Vessel Code, Section II, Part A, SA-105, Specification for Forgings, Carbon Steel, for Piping Components

19. ANSI B16.5, Steel Pipe Flanges and Flanged Fittings

20. MSS SP-66, Pressure Temperature Ratings for Steel Butt-Welding End Valves

21. ASTM E-71, Reference Radiographs for Steel Castings up to 2 in. (51mm) in Thickness

22. ASME Boiler and Pressure Vessel Code, Section VIII, Pressure Vessels

23. ASTM A 194, Standard Specification for Carbon and Alloy Steel Nuts for Bolts for High-Pressure and High-Temperature Service

24. MSS SP-61, Pressure Testing of Steel Valves

25. ASTM A 276, Standard Specification for Stainless and Heat-Resisting Steel Bars and Shapes

26. ASTM A 105, Standard Specification for Forgings, Carbon Steel, for Piping Components

27. ASTM A 181, Standard Specification for Forgings, Carbon Steel, for General-Purpose Piping

28. ASTM A 216, Standard Specification for Steel Castings, Carbon, Suitable for Fusion Welding, for High Temperature Service

29. ASTM E-94, Guide for Radiographic Testing

30. ANSI B31.1, Power Piping

31. ANSI B36.1

32. ANSI B36.19, Stainless Steel Pipe

33. ASTM A 376, Supplementary Requirements for Piping Requiring Special Considerations

34. ASTM A 403, Standard Specification for Wrought Austenitic Stainless Steel Pipe Fittings

35. ASME Boiler and Pressure Vessel Code, Section VIII, Appendix 9, Jacketed Vessels

36. ASME Boiler and Pressure Vessel Code, Section VIII, Paragraph UW-51, Radiographic Examination of Welded Joints

37. ANSI Nuclear Code Case N-10, Time of Examination for Class 1, 2 and 3.

38. WCAP-7744, "Environmental Testing of Engineered Safety Features Related Equipment," J. Locante, September 1971.

39. Letter CWE-92-193 from B.S. Humphries to R.G. Mason, "Response Times - VANTAGE 5 Analysis Assumptions", May 6, 1992.

TABLE 6.3-1

EMERGENCY CORE COOLING SYSTEM - CODE REQUIREMENTS

Component	Code
Refueling Water Storage Tank	Not Applicable
Residual Heat Exchanger	
Tube Side	ASME B&PV Code, Section III, Class C
Shell Side	ASME B&PV Code, Section VIII
Accumulators	ASME B&PV Code, Section III Class C
Valves	ANSI B16.5 or MSS SP-66, and ASME B&PV Code, III, 1968 edition
Piping	ANSI B31.1

TABLE 6.3-2 (1 of 2)

NDT TESTING AND QUALITY STANDARDS FOR ECCS COMPONENTS

RESIDUAL HEAT EXCHANGER

A. Tests and Inspections

1. Hydrostatic Test
2. Radiograph of longitudinal and girth welds (tube side only)
3. UT of tubing or eddy current tests
4. Dye penetrant test of welds
5. Dye penetrant test of tube to tube sheet welds
6. Gas leak test of tube to tube sheet welds before hydro and expanding tubes

B. Special Manufacturing Process Control

1. Tube to tube sheet weld qualifications procedure
2. Welding and NDT and procedure review
3. Surveillance of supplier quality control and product

SAFETY INJECTION, AND RESIDUAL HEAT REMOVAL PUMPS

A. Tests and Inspections

1. Performance Test
2. Dye penetrant of pressure retaining parts
3. Hydrostatic test
4. Radiography of all accessible pressure containing parts

B. Special Manufacturing Process Control

1. Weld, NDT and inspection procedures for review
2. Surveillance of suppliers quality control system and product

TABLE 6.3-2 (2 of 2)

NDT TESTING AND QUALITY STANDARDS FOR ECCS COMPONENTS

ACCUMULATORS

A. Tests and Inspections

1. Hydrostatic test
2. Radiography of longitudinal and girth welds
3. Dye penetrant/magnetic particle of weld

B. Special Manufacturing Process Control

1. Weld, fabrication, NDT and inspection procedure review
2. Surveillance of suppliers quality control and product

VALVES

A. Tests and Inspections

(a) 200 psi and 212° or below (cast or bar stock)
   1. Dye Penetrant Test
   2. Hydrostatic Test
   3. Seat Leakage Test

(b) Above 200 psi and 212°
   (i) Forged Valves
      1. UT of billet prior to forging
      2. Dye penetrant 100% of accessible areas after forging
      3. Hydrostatic Test
      4. Seat Leakage Test

   (ii) Cast Valves
      1. Radiographic 100%*
      2. Dye Penetrant all accessible areas*
      3. Hydrostatic Test
      4. Seat Leakage Test

B. Special Manufacturing Process Control

1. Weld, NDT, performance testing, assembly and inspection procedure review
2. Surveillance of suppliers quality control and product
3. Special Weld process procedure qualification (e.g. hard facing)

* For valves in radioactive service only

TABLE 6.3-3

ACCUMULATOR DESIGN PARAMETERS

Number	4
Type	Carbon steel with stainless steel cladding
Design pressure, psig	700
Design temperature, °F	300
Operating temperature, °F	100 to 150
Normal pressure, psig	650
Minimum pressure, psig	600
Total volume, ft^3	1350
Minimum water volume at operating conditions, ft^3	818
Boron concentration (as boric acid), ppm	2300 to 2600
Code	ASME III Class C

TABLE 6.3-4

REFUELING WATER STORAGE TANK DESIGN PARAMETERS

Number	1
Useable Tank Capacity, gal.	389,000
Required Capacity, gal.	350,000
Operating pressure, psig	0
Operating temperature, °F	40 to 100
Material	Concrete with a Stainless Steel Liner
Design pressure, psig	Static head plus sloshing
Design temperature, °F	135

TABLE 6.3-5

DESIGN PARAMETERS - EMERGENCY CORE COOLING SYSTEM PUMPS

	Centrifugal Charging Pumps	Safety Injection Pumps	Residual Heat Removal Pumps
Number	2	2	2
Design pressure, psig	2800	1700	600
Design temperature, °F	300	300	400
Design flow rate, gpm	150	400	3000
Design head, ft	5800	2500	350
Max. flow rate, gpm	550	650	4500
Head at max. flow rate, ft	1300	1500	300
Discharge pressure at shutoff/psig	2670	1520	170
Motor horsepower, bhp	600	400	400
Type	Horizontal multistage centrifugal	Horizontal multistage centrifugal	Vertical single-stage centrifugal
Material	Stainless steel	Stainless steel	Stainless steel

TABLE 6.3-6 (1 of 5)

SINGLE ACTIVE FAILURE ANALYSIS - EMERGENCY CORE COOLING SYSTEM

INJECTION PHASE

	Component	Malfunction	Comments
A.	Accumulator	Deliver to broken loop	- Totally passive system with one accumulator per loop. Evaluation based on three accumulators delivering to the core and one spilling from ruptured loop.
B.	Pumps		
	1) Centrifugal Charging/Safety Injection	Fails to start	- Two provided. Evaluation based on operation of one.
	2) Safety Injection	Fails to start	- Two provided. Evaluation based on operation of one.
	3) Residual Heat Removal	Fails to start	- Two provided. Evaluation based on operation of one.
C.	Emergency Core Cooling System Automatically Operated Valves		
	1) Centrifugal Charging/Safety Injection pumps		
	a) suction line to RWST isolation	Fails to open	- Two parallel valves; only one valve in either line is required to open.
	b) discharge line to the normal charging path isolation*	Fails to close	- Two valves in series; only one valve required to close
	c) suction from volume control tank isolation	Fails to close	- Two valves in series; only one valve required to close
	d) discharge to injection header	Fails to open	- Two parallel valves; one valve in either line is required to open

TABLE 6.3-6 (2 of 5)

SINGLE ACTIVE FAILURE ANALYSIS - EMERGENCY CORE COOLING SYSTEM

	Component	Malfunction	Comments
D.	Emergency Core Cooling Normally Positioned Valves All remotely operated motor operated valves in the RHR, SI, and Charging/ SI Systems are positioned for ECCS operation before plant startup.	Valve not aligned correctly for proper operation of the ECCS	- Confirmatory "S" signal applied to all ECCS motor operated valves to assure correct position for safety injection.

* The reactor coolant pump seal water path is left open.

COLD LEG RECIRCULATION PHASE

A. Valves operated from Control Room for Cold Leg Recirculation:

1)	Containment sump recirculation isolation	Fails to open	- Two parallel lines; only one valve in either line is required to open.
2)	Residual heat removal pumps suction line to RWST isolation	Fails to close	- Check valves in series with two gate valves; operation of only one valve required.
3)	Safety injection pumps suction line to RWST	Fails to close	- Check valve in series with gate valve; operation of only one valve required.
4)	Centrifugal Charging/Safety pumps suction line to RWST isolation	Fails to close	- Check valve in series with two parallel gate valves. Operation of either the check valve or the gate valves required.

TABLE 6.3-6 (3 of 5)

SINGLE ACTIVE FAILURE ANALYSIS - EMERGENCY CORE COOLING SYSTEM

Component	Malfunction	Comments
5a) Charging pump suction line at discharge of residual HX No. 1	Fails to open	- Separate and independent high head injection path via the SI pumps taking suction from the discharge of residual HX No. 2. - An SI pump to charging pump suction header crosstie provides the capability to supply both sets of high head pumps from either RHR pump.
5b) Safety injection pump suction	Fails to open	- Separate and independent high head injection path via the centrifugal charging/SI pumps taking suction from discharge of residual HX No. 1.
6) RHR heat exchanger crosstie isolation	Fails to close	- Two valves in series, operation of only one valve required.

TABLE 6.3-6 (4 of 5)

SINGLE ACTIVE FAILURE ANALYSIS - EMERGENCY CORE COOLING SYSTEM

Component	Malfunction	Comments
B. Pumps		
1) Component cooling	Fails to start	- A total of five pumps are provided for the two units. The odd pump swings. Evaluation based on operation of one pump per unit. These pumps are running during normal operation.
2) Service water	Fails to start	- Three provided per unit. Evaluation based on operation of one pump per unit. These pumps are running during normal operation.
3) Residual Heat Removal Pump	Fails to start	- Two parallel and independent systems provided. Evaluation based on operation of one.
4) Charging pump	Fails to operate	- Two provided. Evaluation based on operation of one.
5) Safety Injection Pumps	Fails to operate	- Two provided. Evaluation based on operation of one.
Valves Operated from Control Room for Simultaneous Hot and Cold Leg Recirculation:		
1) RHR System		
a) Cold leg isolation	Fails to close	- Two parallel and independent systems. Evaluation based on operation of one.

TABLE 6.3-6 (5 of 5)

SINGLE ACTIVE FAILURE ANALYSIS - EMERGENCY CORE COOLING SYSTEM

Component	Malfunction	Comments
b) Hot leg injection	Fails to open	- Separate and independent high head SI path available for hot leg injection.
2) Safety Injection System		
a) SI pump crosstie isolation	Fails to close	- Two valves in series provided, operation of only one valve required.
b) Cold leg isolation	Fails to close	- Two valves in series provided, operation of only one valve required.
c) Hot leg isolation	Fails to open	- Two parallel and independent systems available. Evaluation based on operation of one.
3) Charging system	None	- Remains aligned as during the cold leg recirculation phase.

TABLE 6.3-7

ACCUMULATOR INLEAKAGE

Observed Leak Rate (cc/hr)	Time Period Between Level Adjustments	Ratio of Observed Leak Rate* to Max. Allowed Design Leak Rate **
2470	1 month	124.5
830	3 months	41.5
415	6 months	20.8
276	9 months	18.8
208	1 year	10.4

* A total of 63.4 cubic feet, added to the initial amount, can be accepted in each accumulator before an alarm is sounded.

** Max. allowed leak rate for manufactures acceptance test is 20 cc/hr (backleakage through check valves)

TABLE 6.3-8 (1 of 2)

SINGLE PASSIVE FAILURE ANALYSIS - ECCS
COLD LEG RECIRCULATION PHASE

Flow Path	Indication of Loss-of-Flow Path	Alternate Flow Path
Low Head Cold Leg Recirculation		
From containment sump to the low head injection headers via the residual heat removal pumps and the residual heat exchangers	Reduced flow in the discharge line from one of the residual heat exchangers (one flow monitor in each discharge line)	Via the independent identical low head cold leg flow path utilizing the second residual heat exchanger and RHR pump.
High Head Recirculation (Safety Injection)		
From containment sump to the high head cold leg injection header via residual heat removal pump No. 2, residual HX No. 2 to the SI pumps and through the common SI pump cold leg injection header to all four RCS cold legs.	Reduced flow in the discharge lines from the safety injection pump (a flow monitor in the discharge line)	From containment sump to the high head cold leg injection headers via residual heat removal pump No. 1, residual HX No. 1 and the centrifugal charging/SI pump crosstie with two parallel valves.

NOTE: As shown on Figure 6.3-2, there are two valves in series at all locations where alternate flow paths are provided.

High Head Recirculation (Charging) -		
From containment sump to the high head cold leg injection header via residual heat removal pump No. 1, residual HX No. 1 to the charging pump cold leg injection header to all four RCS cold legs.	Reduced flow in discharge lines from the charging pump. (a flow monitor in each injection line)	From containment sump to the high head cold leg injection headers via residual heat removal pump No. 2, residual HX No. 2 and the centrifugal charging/SI pump crosstie with two parallel valves.

TABLE 6.3-8 (2 of 2)

SINGLE PASSIVE FAILURE ANALYSIS - ECCS
SIMULTANEOUS HOT AND COLD LEG RECIRCULATION PHASE

Flow Path	Indication of Loss-of-Flow Path	Alternate Flow Path
Low Head Hot Leg Recirculation		
From containment sump to the low head hot leg injection header via RHR pump, RHR HX No. 1 and the RHR crosstie	Reduced flow in the discharge line from RHR pump (one flow monitor in each discharge line)	From containment sump to the high head hot leg headers via RHR pump No. 2 and the safety injection pumps.
High Head Hot Leg Recirculation		
From containment sump to the RCS hot legs via the RHR pump No. 2 and a safety injection pump	Reduced flow in the discharge line from the SI pump (one flow monitor in each discharge line)	Via the independent identical SI hot leg flow path utilizing the second SI pump

TABLE 6.3-9

RECIRCULATION LOOP LEAKAGE

	Items	No. of Units	Type of Leakage Control and Unit Leakage Rate Used in the Analysis	Leakage to Atmosphere (cc/hr)	Leakage to Drain Tank (cc/hr)
1.	Residual Heat Removal Pumps (Low Head Safety Injection)	2	Mechanical seal with leakoff - 1 drop/min	0	6
2.	Centrifugal Charging Pump	2	Same as residual heat removal pump	0	6
3.	High Head Safety	2	Same as residual heat removal pump	0	6
4.	Flanges:		Gasket - adjusted to zero leakage following any test - 10 drops/min/flange used in analysis		
	a. Pump	8		240	0
	b. Valves Bonnet Body (larger than 2")	40		1200	0
	c. Control Valves	6		180	0
5.	Valves - Stem Leakoffs	40	Backseated, double packing with leakoff - 1 cc/hr/in. stem diameter	0	40
6.	Misc., Small Valves	50	Flanged body packed stems - 1 drop/min used	150	0
			TOTALS	1770	58

TABLE 6.3-10

BORON INJECTION TANK DESIGN PARAMETERS*

Number	1
Total Volume, gal. (also useable volume)	900
Boron concentration, wt %	$11^1/_2$ to 13
Design pressure, psig	2735
Design temperature, °F	300
Operating pressure, psig	2340
Operating temperature, °F	165
Material	Stainless Steel
Code	ASME III Class C

* Original design parameters; NRC approval to remove the BIT from service was received per Technical Specification Amendment 114/103.

TABLE 6.3-11

ECCS ISOLATION VALVES

	LOCATION	NO. OF VALVES	NORMAL POSITION PRIOR TO "S"
1.	Charging Injection Header (SI8803A&B)	2 (in Parallel)	CLOSED
2.	SI Cold Leg Header (SI8802)	1	OPEN
3.	SI Hot Leg Recirc Headers (SI9011A&B)	2	CLOSED
4.	RHR Cold Leg Injection Headers (SI8809A&B)	2	OPEN
5.	RHR Hot Leg Injection Header (RH9000)	1	CLOSED

TABLE 6.3-12

ECCS STARTING SEQUENCE SUMMARY

Time (sec)	Action
0*	Initiation of SI signal.
0	Start DGs and attain rated speed and voltage.
12	Diesel up to speed, energize motor control centers and apply opening/closing signals to motor operated valves. Typical operating times for the larger valves are 10 seconds.
12	Start centrifugal charging pumps.
17	Start medium head SI pumps.
22	Start RHR pumps.

* Time Zero is receipt of process intelligence.

CONTROL ROOM DRAWING

M-64

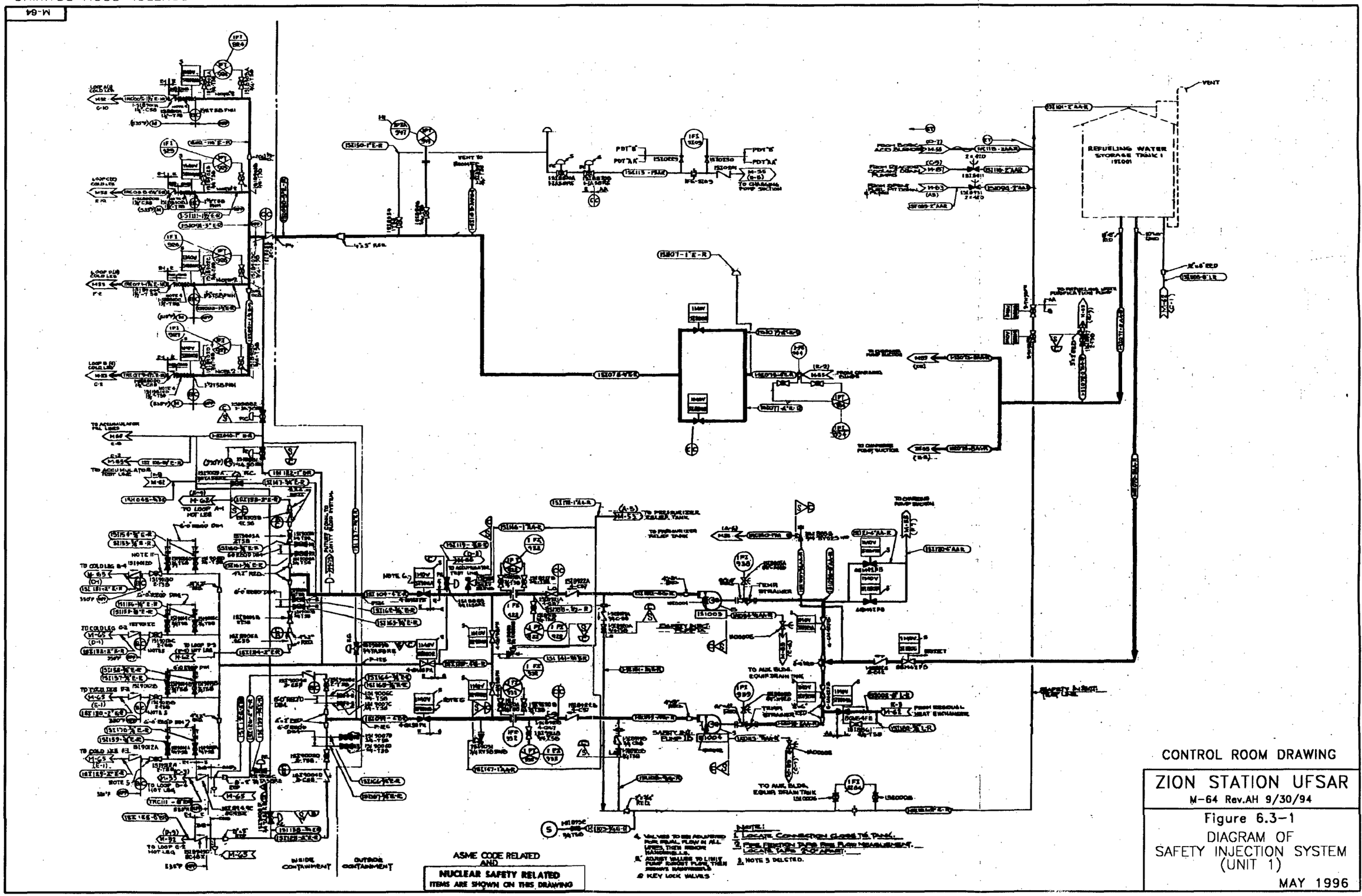

CONTROL ROOM DRAWING

ZION STATION UFSAR

M-64 Rev.AH 9/30/94

Figure 6.3-1

DIAGRAM OF SAFETY INJECTION SYSTEM (UNIT 1)

MAY 1996

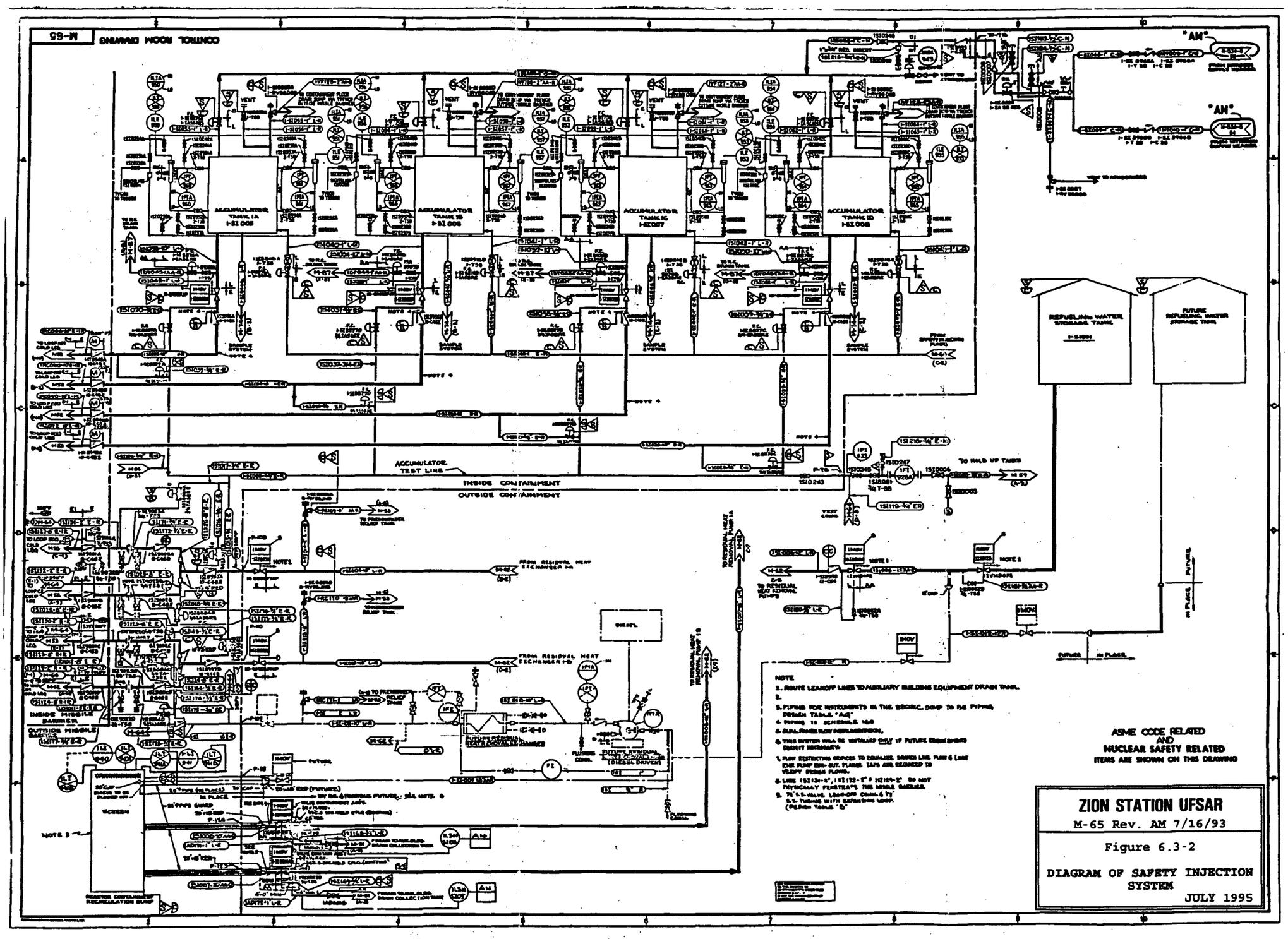
CONTROL ROOM DRAWING
M-65
ACCUMULATOR TANK 1A
ACCUMULATOR TANK 1B
ACCUMULATOR TANK 1C
ACCUMULATOR TANK 1D
REFUELING WATER STORAGE TANK
FUTURE REFUELING WATER STORAGE TANK
ACCUMULATOR TEST LINE
INSIDE CONTAINMENT
OUTSIDE CONTAINMENT
TO HOLD UP TANKS
FROM RESIDUAL HEAT EXCHANGER 1A
FROM RESIDUAL HEAT EXCHANGER 1B
TO RESIDUAL HEAT REMOVAL PUMP 1A
TO RESIDUAL HEAT REMOVAL PUMP 1B
TO RESIDUAL HEAT REMOVAL PUMPS
FUTURE
IN PLACE
"AM"
NOTE
1. ROUTE LEAKOFF LINES TO AUXILIARY BUILDING EQUIPMENT DRAIN TANK.
2.
3. PIPING FOR INSTRUMENTS IN THE RECIRC. SUMP TO BE PIPING DESIGN TABLE "A01"
4. PIPING IS SCHEDULE 160
5. DUAL RANGE FLOW INSTRUMENTATION.
6. THIS SYSTEM WILL BE INSTALLED ONLY IF FUTURE ENGINEERING DEMONSTRATES NECESSARY.
7. FLOW RESTRICTING ORIFICES TO EQUALIZE DISCHARGE LINE FLOW & LOAD ON PUMP DISCHARGE FLANGE. TAPS ARE DESIGNED TO VERIFY DESIGN FLOWS.
8. LINE 1S2134-2", 1S2132-2" & 1S2129-2" DO NOT PHYSICALLY PENETRATE THE MISSILE BARRIER.
9. 2" S.I. VALVE LEAK-OFF CONN. & 2" S.I. TUBING WITH SUPPORTS LOOP. (PIPING TABLE "B")
ASME CODE RELATED AND NUCLEAR SAFETY RELATED ITEMS ARE SHOWN ON THIS DRAWING
ZION STATION UFSAR
M-65 Rev. AM 7/16/93
Figure 6.3-2
DIAGRAM OF SAFETY INJECTION SYSTEM
JULY 1995

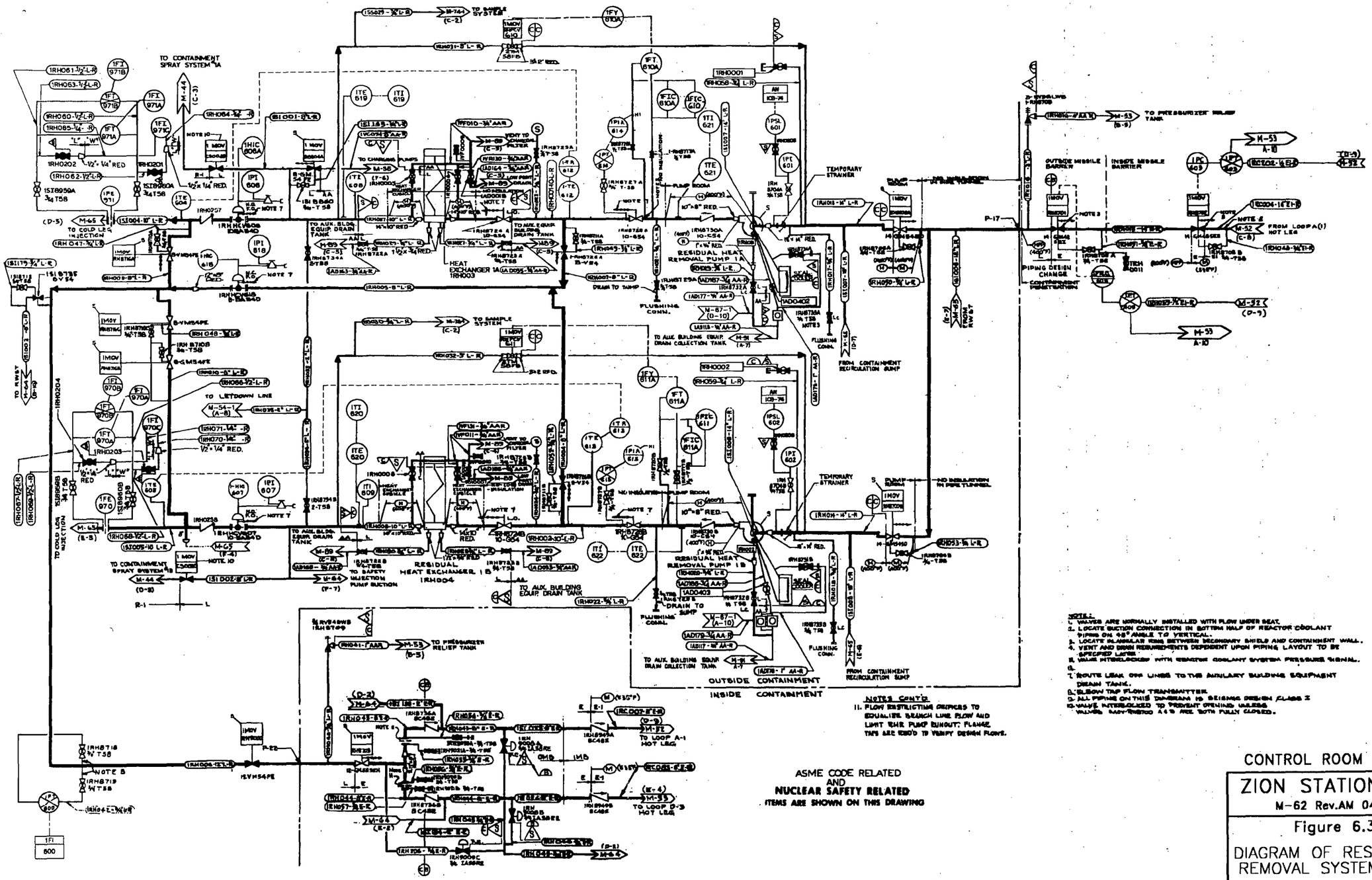

NOTES:
1. VALVES ARE NORMALLY INSTALLED WITH FLOW UNDER SEAT.
2. LOCATE SUCTION CONNECTION IN BOTTOM HALF OF REACTOR COOLANT PIPING ON 45° ANGLE TO VERTICAL.
3. LOCATE FLANGELAR RING BETWEEN SECONDARY SHIELD AND CONTAINMENT WALL.
4. VENT AND DRAIN REQUIREMENTS DEPENDENT UPON PIPING LAYOUT TO BE SPECIFIED LATER.
5. VALVE INTERLOCKED WITH REACTOR COOLANT SYSTEM PRESSURE SIGNAL.
6.
7. ROUTE LEAK OFF LINES TO THE AUXILIARY BUILDING EQUIPMENT DRAIN TANK.
8. ELBOW TAP FLOW TRANSMITTER.
9. ALL PIPING ON THIS DIAGRAM IS SEISMIC DESIGN CLASS I
10. VALVE INTERLOCKED TO PREVENT OPENING UNLESS VALVES MOV-1(8)00 A & B ARE BOTH FULLY CLOSED.

NOTES CONT'D
11. FLOW RESTRICTING ORIFICES TO EQUALIZE BRANCH LINE FLOW AND LIMIT THE PUMP RUNOUT. FLANGE TAPS ARE REQ'D TO VERIFY DESIGN FLOWS.

ASME CODE RELATED
AND
NUCLEAR SAFETY RELATED
ITEMS ARE SHOWN ON THIS DRAWING

CONTROL ROOM DRAWING

ZION STATION UFSAR

M-62 Rev.AM 04/11/96

Figure 6.3-3

DIAGRAM OF RESIDUAL HEAT REMOVAL SYSTEM (UNIT 1)

MAY 1996

6.4 HABITABILITY SYSTEMS

Habitability systems are provided to ensure that control room operators can remain in the Control Room under normal and accident conditions. Habitability systems are designed and operated such that the requirements of General Design Criterion 19, Appendix A, 10CFR Part 50 are fulfilled. UFSAR Section 3.1 should be consulted for the Zion response to Criterion 19. The habitability systems include equipment, supplies, and procedures to protect the control room operators against such postulated releases as radioactive material, toxic gases, smoke, and steam. Materials and facilities are included to permit control room operators to remain in the Control Room for an extended period. Currently, the Zion UFSAR contains information for the following three components of habitability systems:

1) Control Room Heating, Ventilation, and Air Conditioning (HVAC) System;

2) Shielding included in control room design; and

3) Radiation monitoring of control room air.

6.4.1 Design Basis

The Control Room HVAC System design basis is provided in Section 9.4.1.1. The control room shielding design basis is provided in Section 12.3.2.1.1. The Control Room Radiation Monitoring System design basis is included in Section 11.5.1.

6.4.2 System Design

6.4.2.1 Definition of Control Room Envelope

Since the Control Room has its own HVAC system, the control room envelope has been defined to include only the Control Room proper. All instrumentation, controls, and critical files which are essential for a safe plant shutdown are located in the Control Room.

6.4.2.2 Ventilation System Design

The Control Room is a tornado-proof, Seismic Class I structure with concrete shielding adequate for safe occupancy during all plant normal and accident conditions. The Control Room is air conditioned by two Class I full-capacity systems, one of which is a standby. This system is provided to supply the Control Room with the required air to maintain continuous room conditions at design values. Each system is fed from a different essential bus to ensure continuous operation under any conditions.

Provisions are made for shutting off outside makeup air in case of a high radiation level and taking makeup air from the Turbine Building through

particulate and charcoal filters. Radiation detectors monitor both the ventilation air intakes and the control room area.

The Control Room HVAC System description is provided in Section 9.4.1.2. The Control Room Radiation Monitoring System description is provided in Section 11.5.2.1.3.

6.4.2.3 Leaktightness

Positive pressure within the Control Room will prevent the inleakage of any airborne activity from outside the control room area. All cable, piping, and miscellaneous penetrations through the biological barrier are sealed to minimize the magnitude of leakage. Personnel doors will be tightfitting and gasketed.

6.4.2.4 Shielding Design

The Control Room is protected from external radiation by extensive concrete shielding as shown in Table 12.3-2. The Control Room was designed to minimize radiation streaming from penetrations, doors, ducts, and stairways, and to limit whole body doses for a design basis loss-of-coolant accident (LOCA). The control room shielding description is provided in Section 12.3.2.2.2.3.

6.4.3 System Operating Procedures

Under LOCA conditions the control room mode of operation will be as follows: upon receiving a safety injection signal or upon exceeding an alarm setpoint on one of the control room intake SPING air monitor channels, the control room outside air intake will be automatically isolated and one of the two 100% capacity fans of the makeup air filter unit will start and draw 2000 cfm of makeup air from the Turbine Building (El 592′). In all other respects, the system will operate as in the normal mode and control room pressurization will be maintained. The system would require manual resetting for return to the normal mode.

6.4.4 Design Evaluations

6.4.4.1 Radiological Protection

A radiation monitor in the outside air intake is set to sense an abnormal level of activity. On an increase in activity approximately 100 times above background, the Control Room HVAC System automatically isolates the normal intake, takes makeup air from the Turbine Building, starts one of two 100% capacity emergency filter makeup air fans, and routes the makeup air through a filter unit consisting of a HEPA filter bank and the charcoal adsorber banks in series. The minimum quantity of outdoor air introduced into the system under all conditions replaces air leakage for system pressurizing. The quantity of makeup air to the Control Room is more than

sufficient to satisfy personnel requirements. In all other respects, the system operates as for normal operation.

The guiding principle of this design is to have alternate fresh air intake points such that either intake point, but probably not both, could be contaminated by Containment leakage following a LOCA. Consequently, the outside air intake supplies makeup air under normal conditions, and during emergency operations, the Turbine Building is the source of makeup air. In either event, inlet filtration capability, in addition to the recirculation filters in normal use, is provided to ensure the system's capability to provide clean air.

The evaluation of the control room habitability following an accidental release of radioactive material considered the following release sources:

1. Design basis LOCA with ensuing Primary Containment leakage, and

2. Engineered safety feature (ESF) leakage.

The basic methodology and assumptions of the evaluation are discussed in detail in Section 15.6. The following is a brief summary of the evaluation results.

Atmospheric dispersion (χ/Q) parameters were determined for the makeup air intake from meteorological data collected onsite, Murphy and Campe's basic atmospheric dispersion equation, and the sector-dependent exceedance probability definition in Regulatory Guide 1.145. The χ/Q data for the duration of the accident are given in Section 15.6.

For a Containment leakage rate of 0.1% per day for the first day and 0.05% per day thereafter, 2000 cfm makeup air flow from the Turbine Building with a charcoal adsorber removal efficiency of 99% for all the halogen species (in accordance with Regulatory Guide 1.52), and $^1/_8$ inch H_2O positive pressure in the Control Room, exposures to control room personnel due to the combined post-LOCA Containment and ESF leakage are well within the General Design Criteria 19 limits. Therefore, the Control Room is habitable under the assumed design basis accident conditions. See Section 15.6 for the calculated doses to plant operators resulting from the design basis LOCA.

6.4.4.2 Toxic Gas Protection

6.4.4.2.1 Toxic Vapors

The impact of potential hazardous chemicals to the habitability of the Zion Station Control Room was carried out in accordance with the criteria in Regulatory Guides 1.78 and 1.95 and the methodology in NUREG-0570. The chemical releases considered were the following:

1. All potentially hazardous chemicals and asphyxiants stored onsite.

2. Offsite manufacturing, storage, and transportation facilities of hazardous chemicals within 5 miles of the Zion Station.

6.4.4.2.1.1 Onsite Toxic Chemicals and Asphyxiants

Because all storage areas are in the lower level of the Turbine Building, accidental releases of toxic fumes or asphyxiants under normal operating conditions would pose no threat to the control room personnel. This is because the outside air intake of the Control Room is at a location which is very unlikely to be reached by these gases without significant dilution. For analytical purposes, nonetheless, it was assumed that the Control Room would be on radiation alert at the time of the toxic chemical or asphyxiant accident with the Control Room HVAC System drawing air from the Turbine Building.

Sulfuric acid and the carbon dioxide in the Cardox Fire Protection System were the only hazardous chemicals and asphyxiants found to be in quantities large enough to warrant evaluation.

6.4.4.2.1.1.1 Sulfuric Acid

The sulfuric acid is used in the Makeup Demineralizer System. There are two sulfuric acid tanks at the Zion Station:

1. A 10,000 gallon bulk-storage tank in the Turbine Building at El 560′, and

2. A 300 gallon day tank at El 592′ in the Turbine Building.

The 10,000 gallon tank is located 84 feet laterally, and 42 feet vertically from the control room makeup air intake one level above. The tank has one pump located atop of the tank which fills the acid day tank periodically. The piping from the storage tank to the day tank contains acid only during transfer, with all acid draining back to the bulk storage tank. Concentration of the sulfuric acid ranges between 92% and 96%.

The acid day tank is on the same level as the control room makeup air intake and 96 feet away.

Should there be any acid spill on the concrete floor, a reaction would occur with the primary productions of sulfate salts (i.e., calcium sulfate, aluminum sulfate, etc. depending on the constituents of the concrete) and some sulfuric dioxides and trioxides. The reaction type and rates would be very dependent on cement H_2O content and environmental conditions. After an initial high reaction rate, attack on the concrete would slow down due to the formation of an insoluble layer of corrosion products. The bulk

storage tank, the day tank, and associated piping are lined. As such, the possibility of leakage is very small and any acid spill on the concrete floor would not pose a threat to the control room personnel due to the distance of the tanks to the makeup air intake.

A reaction between concentrated sulfuric acid and a large quantity of water could release sufficient heat to vaporize the acid as an aerosol (acid mists). This accident is not considered feasible since there are no large quantities of water adjacent to the tanks. In addition, should any acid mists be formed, control room personnel would be protected from these mists by the control room makeup air filter unit.

6.4.4.2.1.1.2 Cardox System

The Cardox fire protection bulk storage tank contains 10 tons of carbon dioxide. It is located in an area which is open and well ventilated in the Turbine Building at El 592′, approximately 165 feet from the control room makeup air intake and on the other side of a fire wall. There are six fire doors connecting the two sides. The makeup air intake is 23 feet above the floor. It was determined that, due to the presence of this fire wall, CO_2 releases from the Cardox System do not pose a threat to the control room personnel, even if the entire contents of the Cardox tank were to be released. The analysis was based on the following assumptions:

1. A design basis LOCA and tank rupture occur simultaneously.

2. The control room outside air intake will be isolated and makeup air will be taken from the Turbine Building.

3. The Cardox tank content will be released instantly and mix uniformly with the atmosphere in the two lower levels of the Turbine Building on the side of the fire walls containing the Cardox tank ($V = 1.25 \times 10^6$ ft^3).

4. Pressure relief will be through open hatches and staircases, and purging of the Turbine Building by natural convection will not take place.

5. Leakage through the fire doors will be at twice the 10 cfm per day rate given in Reg. Guide 1.78. With two single doors and two double doors connecting the two sides at El 592′, the total assumed leakage would be 120 cfm.

6. CO_2 leaking into the Turbine Building area containing the control room makeup air intake will mix uniformly within that area and be drawn by the Control Room HVAC System ($V = 3.3 \times 10^5$ ft^3).

7. Control room intake rate and exhaust = 2000 cfm.

8. Control room assumed free-air volume = 60,000 ft^3.

Despite the above conservative assumptions, it was determined that CO_2 buildup within the Control Room will not surpass the asphyxiant limit listed on Regulatory Guide 1.78.

Rupture of the Cardox tank or of the sulfuric acid tank during normal operation poses no threat to the control room personnel since the Control Room HVAC System will be drawing air from outdoors. The probability of tank rupture coincident with a design basis LOCA is considered to be extremely small.

6.4.4.2.1.2 Offsite Toxic Chemicals

Surveys related to offsite manufacturing and storage facilities of toxic chemicals and gases within five miles of the Zion Station have concluded that there is no threat to the habitability of the Zion Control Room.

Lake traffic of hazardous chemicals by barge is rarely closer than 5 miles (typically 12 miles) from the shore. The barge operates once every two weeks. In accordance with Regulatory Guide 1.78, this is not considered a hazard.

There are no major truck routes within five miles of the station. The closest route, Route 41, is about seven miles away at its closest point.

The Chicago and Northwestern Transportation Company rail tracks are within a mile of the station. The rail tracks are used for local traffic and commuter trains. Since there are not any businesses within a five-mile radius that have demands for large quantities of chemicals, shipments of hazardous chemicals by the rail track going near the Zion Station will be infrequent and will not present a major threat.

6.4.4.2.2 Toxic Gas Control

Although Section 6.4.4.2.1 has concluded that hazardous chemicals in and around Zion Station have no significant impact on control room habitability, the control room HVAC system makeup air filter units described in Section 9.4.1.2.2.5 have been designed to permit continued operation in the presence of chlorine and other toxic gases.

Based on the 2000 cfm minimum outdoor air flow, and the fact that charcoal filters can adsorb an average of 33.3% of its own weight of most odor causing substances and an average of 16.7% of chlorine and other toxic gases, the makeup charcoal filter has the capability of adsorbing 70 lbs of chlorine and other toxic gases (charcoal weight of 420 lbs). Assuming that

50% chlorine and 50% other gases would be adsorbed by the charcoal filter simultaneously, a total of 35 lbs of chlorine can be adsorbed. The charcoal filters would then be adequate for 12 hours of operation at an inlet chlorine concentration of 162 ppm.

As an additional precaution, there are five self-contained breathing apparatus in the Control Room. Masks are stored in the Turbine Building, just outside the south-hallway access doors. Also, a six-hour bottled air supply is located in the Turbine Building at El 617'.

6.4.4.3 Fire/Smoke Detection and Control

An equipment fire in the Control Room will not cause abandonment of the Control Room and will not prevent a safe shutdown of the plant. However, to demonstrate compliance with 10CFR50 Appendix R, a Safe Shutdown Analysis was performed to prove that safe shutdown could be achieved from outside the Control Room (see Zion Station Fire Protection Report).

Overload and short circuit protection is provided for the electrical control and instrumentation equipment within the Control Room. There are no power cables in the Control Room; therefore, the fire hazard due to electrical faults is minimized. All electrical wiring and equipment is surrounded by or mounted in metal enclosures. The redundance of the reactor trip, ESF systems control circuits, and the associated segregation and physical separation afforded for redundant channels (including wiring), allows only isolated damage to electrical equipment.

In the event of a fire, the operators have portable respiratory equipment and portable fire extinguishers available, which are located and used in accordance with National Fire Code and National Fire Protection Association specifications. The equipment provided is considered adequate to control any such fire that could possibly result and prevent a forced abandonment of the Control Room. The ability to achieve a safe shutdown condition during a fire is discussed in the Fire Protection Report.

To prevent the spread of fire behind the control boards and interconnected areas, the following provisions are made:

1. Cables used throughout the installation will have an exterior jacket that meets the IPCEA vertical flame test requirements. Power and control cables for application at 480 V and lower are rated at 600 V, insulated with oil-based high temperature rubber, and covered with a fire resistant jacket of similar material. Shielded instrumentation cables are insulated with fire resistant chlorosulfurated polyethylene and covered with a jacket of the same material.

2. Structural and finish materials (including furniture) for the Control Room and interconnecting areas have been selected on the basis of fire resistant characteristics. Structural floors and interior walls are

of reinforced concrete. Interior partitions incorporate metal, masonry, or gypsum dry walls on metal joints. The control room ceiling, door frames, and doors are metallic. Wood trim was not used.

The design of the Control Room HVAC System ensures a habitable environment, both during an outbreak of fires or smoke and during the period required to bring the condition under control. The system is arranged to establish a ventilation pattern which routes supply air first to the normally occupied spaces and then exhausts air through normally unoccupied areas into the return duct system. In the Control Room, conditioned air is supplied to the occupied spaces through a ceiling distribution system. Air is exhausted from the Control Room through openings in the control boards and up through exhaust ducts to a return header located above the ceiling.

The air outlets from the control boards are provided with dampers to regulate the distribution of air flow to each board section. Since the control boards are under negative pressure, any leakage through board cracks will be from the occupied area to the area behind the boards.

In the event of fire, smoke, or products of combustion in the control boards, smoke detectors will alert the operators and automatically position dampers to pass all of the supply air delivered to the conditioned spaces through a normally bypassed charcoal filter for smoke and odor adsorption. A manual override is also provided for this function. Also, a smoke detector is located in the makeup air supply from the Turbine Building. On sensing smoke, the detector will generate a signal which will divert all of the supply air delivered to the Control Room through the charcoal adsorbers.

6.4.4.4 Steam Protection

UFSAR Appendix 3A discusses the minimal impingement force resulting from a postulated break of main steam piping on El 642′ of the Turbine Building. It concludes that the Control Room will always be habitable under any postulated break of a main steam or steam generator feedwater line.

UFSAR Appendix 3B determines that the only high energy fluid line routed through El 642′ of the Auxiliary Building is part of the heating system and is located in the Auxiliary Building Ventilation System Equipment Room. It lists several barriers that separate this room from the Control Room and states that any break of a heating system line in the Auxiliary Building Ventilation System Equipment Room will not affect the habitability of the Control Room. It also concludes that, since the environmental control systems for the Control Room and its associated areas are completely independent of the systems provided for the rest of the Auxiliary Building, there is no pathway for steam/water released in the Auxiliary Building to enter the Control Room by way of the ventilation system.

6.4.5 Testing and Inspection

The Control Room HVAC System inspection and testing requirements are contained in Section 9.4.1.4.

6.4.6 Instrumentation Requirements

Control systems for control room habitability are discussed in Section 9.4.1.2.

6.5 FISSION PRODUCT REMOVAL AND CONTROL SYSTEMS

6.5.1 Engineered Safety Feature Filter Systems

This information is covered in Sections 6.4 and 9.4.

6.5.2 Containment Spray System

6.5.2.1 Design Basis

The Containment Spray (CS) System is designed to limit the pressure in the containment atmosphere to below the containment design pressure and to remove sufficient iodine from the containment atmosphere to limit the offsite and site boundary doses to values below those set by 10CFR100 (see Reference 1) in the unlikely event of a loss-of-coolant accident (LOCA).

The system is designed to deliver, with only one pump running, enough sodium hydroxide (NaOH) to the Containment to form an 8.8 pH solution when combined with the inventory of the Refueling Water Storage Tank (RWST) and the spilled reactor coolant water.

All components of the CS system are designed as Seismic Class I and are protected from missiles which could result from a LOCA or a tornado. All risers and rings have been supported to withstand loads resulting from the Design Basis Earthquake (DBE) as well as operating loads. A seismic dynamic analysis has been performed on the system.

6.5.2.2 System Design and Operation

The CS system has been divided into three independent 100% capacity subsystems with no common headers. A single active or passive failure in any of three subsystems (Table 6.5-1) will therefore not affect the operation of either of the other two subsystems. The system diagram (Figure 6.5-1) illustrates equipment redundancy, flowpaths, and system operation. Of the three containment spray pumps, two are motor-driven and the third is diesel engine-driven. In the unlikely event of a LOCA, a high-high containment pressure signal coincident with a safety injection signal will start all three containment spray pumps and open the normally closed motor-operated valves on the discharge of these pumps. All three pumps take suction from the RWST and discharge into the spray rings located around the inside of the containment dome. Each pump supplies two rings having a total of either 171 or 172 spray nozzles. A portion of the discharge flow from each spray pump is continuously diverted through a control valve, which is operated by a ratio controller (Figure 6.5-1), then into an eductor which draws NaOH from the spray additive tank. A normally closed motor-operated valve on each line from the spray additive tank to each eductor is opened by the spray initiation signal described above. The mixture of pump discharge flow and spray additive tank flow enters the pump suction line where it is mixed with flow from the RWST. The eductors have

been sized so that at least 2500 gallons will be drawn from the spray additive tank in the shortest possible time required for emptying the RWST. The pH of the fluid at the nozzles prior to mixing in the sump is 10.5. When the RWST has been emptied, the injection phase of the accident has been completed. As discussed in Section 6.3, the spray pumps will continue to operate until the low level alarm on the RWST annunciates, at which time all but one spray pump will be stopped. The remaining spray pump will be run until the RWST is empty.

Two of the three spray subsystems can be supplied with water from the containment sump using the residual heat removal pumps to deliver water to the discharge lines of the two motor-driven spray pumps. Spray pump operation is, therefore, not necessary during the recirculation phase. Containment spray, via the RHR pumps, is continued for at least four days after the event initiation to provide for continued iodine removal.

Both motor-driven pumps and all motor-operated valves can be supplied with power from the diesel generators in the event of a loss of offsite power. Failure of a single diesel or emergency bus will affect one subsystem only.

6.5.2.3 Component Description

6.5.2.3.1 Containment Spray Pumps

Design information for the containment spray pumps is given in Table 6.5-2.

The diesel engine-driven pump, although automatically started on a containment spray actuation signal, can be controlled manually by a 5-position (TEST, AUTO, OFF, MAN 1, MAN 2) switch on a local panel near the diesel engine. With the local 5-position switch in the "AUTO" position, the diesel engine may be controlled manually from a hand switch in the Control Room or automatically from a containment spray actuation signal. With the switch in either of the manual positions or auto, the engine is started from either of two 24-V battery networks maintained by an automatic float-equalize charger. Low lube oil pressure alarms and an engine overspeed trip are provided for protection of the diesel engine. When the engine is started, the service water supply for engine cooling is automatically initiated. Local service water flow indication is provided for the containment spray diesel engine coolers.

Each diesel engine-driven pump is fed from a 55 gallon diesel oil day tank. The day tanks are in turn fed from one common 5,000 gallon containment spray pump diesel oil storage tank. The 5,000 gallon tank is provided with local level indication. Each day tank is provided with an indicating level switch which actuates a control room annunciator on low level.

6.5.2.3.2 Spray Additive Tank

Table 6.5-3 provides the spray additive tank design information.

6.5.2.3.3 Eductors

Design information for the eductors is given in Table 6.5-4.

6.5.2.3.4 Spray Nozzles

Spray nozzle design information is provided in Table 6.5-5.

6.5.2.3.5 Piping

Eight-inch and smaller CS System piping is seamless austenitic steel per American Society for Testing and Materials (ASTM) A 312 (see Reference 2), Type 304, Schedule 40S per USA Standard (USAS) B36.19 (see Reference 3). Ten-inch and 14-inch piping are welded plate austenitic steel per ASTM A 358 (see Reference 4), Class I, Grade 304. They are Schedule 40S and standard weight respectively.

6.5.2.3.5.1 Nondestructive Testing

All CS System piping less than 4 inches has been radiographed in accordance with the applicable ASTM specification. Piping 4 inches and above have been 100% radiographed in accordance with the applicable ASTM specification. All CS System piping seams have been 100% radiographed in accordance with the applicable ASTM specification.

The root pass of CS System piping 4 inches and above, and the finish weld of piping less than 4 inches have been liquid penetrant tested in accordance with the ASME Boiler and Pressure Vessel (B&PV) Code, Section VIII, Appendix 8 (see Reference 5).

6.5.2.3.6 Fittings

All CS system fittings are buttweld, seamless, or welded austenitic steel per ASTM A 403 (see Reference 6), Grade WP 304, per USAS B16.9 (see Reference 7).

6.5.2.3.6.1 Nondestructive Testing

All seams are 100% radiographed in accordance with ASTM A 403 (see Reference 6).

6.5.2.3.7 Valves

CS system check valves and gate valves are cast alloy steel per ASTM A 351 (see Reference 8), Grade CF8 or CF8M, 150- or 300-lb valves with buttwelds conforming to the requirements of USAS B16.5 (see Reference 9). The CS system gate valves are outside screw and yoke type with a bolted bonnet, solid or flexible wedge disk, hardened stainless steel seating surfaces, and stainless steel trim. The check valves have a bolted cap, stainless

steel trim, and hardened stainless seating surfaces. Swing type check valves are used in the CS system except at pump discharge where nonslam types are used.

6.5.2.3.7.1 Nondestructive Testing

Castings have been 100% radiographed on all pressure containing parts and liquid penetrant tested on all accessible surfaces. Forgings have been ultrasonic and liquid penetrant tested on all accessible surfaces.

6.5.2.4 System Testing

6.5.2.4.1 Preoperational Testing

Test connections were provided inside the Containment on each of the three subsystems. These connections enabled the subsystems to be tested at full flow prior to plant startup. The containment spray full flow tests were performed in two parts; a full flow test through the ring headers and nozzles and a second full flow test of the remainder of the pumping trains was performed in conjunction with the full flow Emergency Core Cooling System (ECCS) test.

The results of the tests were acceptable. The following items were checked for proper operation during the test:

- Spray pump start
- Proper valve operation
- Spray pump flow rates, discharge pressure, and proper eductor flow rate
- Control room alarms
- System actuation by individual Train A and B engineered safety features (ESF) relays
- System interlocks
- Nozzle flow

The original preoperational test data is maintained in the station files.

6.5.2.4.2 Operational Testing

Test lines have been provided on each subsystem from a point upstream of the containment isolation valve to the RWST. This will permit testing of any pump during plant operation. All test connections and lines are shown on the system diagram (Figure 6.5-1). Inservice Inspection (ISI) is addressed in Section 6.6, Inservice Inspection of Class 2 & 3 Components.

An installed tee and spectacle flange in each containment spray riser allow connection of an air compressor hose to facilitate containment spray nozzle testing.

6.5.2.5 System Analysis

This analysis is provided in Appendix 6B.

6.5.3 Fission Product Control Systems

This information is covered in Section 15.6.5.

6.5.4 Ice Condenser as a Fission Product Cleanup System

This section is not applicable to Zion Station.

6.5.5 References, Section 6.5

1. 10CFR100, Reactor Site Criteria

2. ASTM A312, Standard Specification for Seamless and Welded Austenitic Stainless Steel Pipes

3. ANSI (USAS) B36.19, Stainless Steel Pipe

4. ASTM A358, Standard Specification for Electric-Fusion-Welded Austenitic Chromium-Nickel Alloy Steel Pipe for High Temperature Service

5. ASME Boiler and Pressure Vessel Code, Section VIII, Appendix 8, Methods for Liquid Penetrant Examination (PT)

6. ASTM A403, Standard Specification for Wrought Austenitic Stainless Steel Piping Fittings

7. ANSI (USAS) B16.9, Factory-Made Wrought Steel Butt Welding Fittings

8. ASTM A351, Standard Specification for Castings, Austenitic, Austenitic-Ferritic (Duplex), for Pressure-Containing Parts

9. ANSI (USAS) B16.5, Steel Pipe Flanges and Flanged Fittings

10. ASME Boiler and Pressure Vessel Code, Section VIII, Paragraph UW-51, Radiographic and Radioscopic Examination of Welded Joints

11. ASME Boiler and Pressure Vessel Code, Section VIII, Appendix 6, Methods for Magnetic Particle Examination (MT)

12. ASME Boiler and Pressure Vessel Code, Section VIII, Appendix 7, Examination of Steel Castings

TABLE 6.5-1 (1 of 2)

SINGLE ACTIVE FAILURE ANALYSIS
CONTAINMENT SPRAY SYSTEM

Component	Malfunction	Comments
A. Refueling Water Storage Tank	None	Passive component, active failure not credible.
B. Spray Additive Tank	Heater Failure	Redundant heaters supplied, each with a separate power supply.
C. Containment Spray Pump (Two Motor-Driven and One Diesel-Driven)	Failure to Start	Three provided, each with a separate power supply. Evaluation based on one or two depending on the number of fan coolers operating.
D. Eductors	None	Passive component, active failure not credible.
E. Automatically Operated Valves		
1. Spray additive tank outlet	Failure to Open	Three parallel lines; separate power supplies.
2. Spray pump discharge	Failure to Open	Three parallel lines; separate power supplies.

TABLE 6.5-1 (2 of 2)

SINGLE ACTIVE FAILURE ANALYSIS
CONTAINMENT SPRAY SYSTEM

Flow Path	Indication of Loss-of-Flow Path	Alternate Flow Path
From RHR connection on the Containment Spray System to the spray nozzles.	Radiation monitor in Class I pipe chase will detect leak.	Alternate spray header connected to the other RHR train.

TABLE 6.5-2

DESIGN PARAMETERS - CONTAINMENT SPRAY PUMPS

	Motor-Driven	Diesel Engine-Driven
Number per unit	2	1
Capacity, gpm (each)	3000	3000
Runout flow, gpm	4000	4000
Net Developed Head, ft	477	477
NPSH required, ft (at runout)	33	33
NPSH available, ft (at runout)	41.2	41.2
Type	Horizontal centrifugal dual volute with horizontally split case	Horizontal centrifugal dual volute with horizontally split case
Material	Type 316 Stainless Steel	Type 316 Stainless Steel
Motor/Diesel engine	600 hp, 4000 V, 3-phase, 60 Hz	480 bhp, 12 Cylinder, 1800 rpm, 4-Cycle

Radiography and magnetic particle testing of pressure containing welds was done in accordance with the ASME B&PV Code, Section VIII, Paragraph UW-51 (see Reference 10) and Appendices 6 (see Reference 11) and 7 (see Reference 12) respectively.

TABLE 6.5-3

SPRAY ADDITIVE TANK DESIGN PARAMETERS

Number per unit	1
Material	Type 304 Stainless Steel
Volume, gal.	5000
Fluid	30% NaOH in water
Design Pressure	Atmospheric
Design Temperature, °F	150

The spray additive tank has been 100% radiographed in accordance with the ASME B&PV Code, Section VIII, and liquid penetrant tested in accordance with the ASME B&PV Code, Section VIII, Appendix 8 (see Reference 5).

TABLE 6.5-4

EDUCTOR PARAMETERS

Number per unit	3
Material	Type 304 Stainless Steel
Type	Schutle and Koerting Company Type 266
Design Pressure, psig	400
Design Temperature, °F	400
Design Flow at pressure connection, gpm	260
Design Flow at suction connection, gpm	50

The eductors have been 100% radiographed in accordance with the ASME B&PV Code, Section VIII, Paragraph UW-51 (see Reference 10) and liquid penetrant tested in accordance with the ASME B&PV Code, Section VIII, Appendix 8 (see Reference 5).

TABLE 6.5-5

SPRAY NOZZLE PARAMETERS

Number per unit	171 or 172 per subsystem
Material	Type 304 Stainless Steel
Type	Spraco 1713, ramp bottom
Design Flow, gpm	15.2
Pressure drop at design flow, psi	40

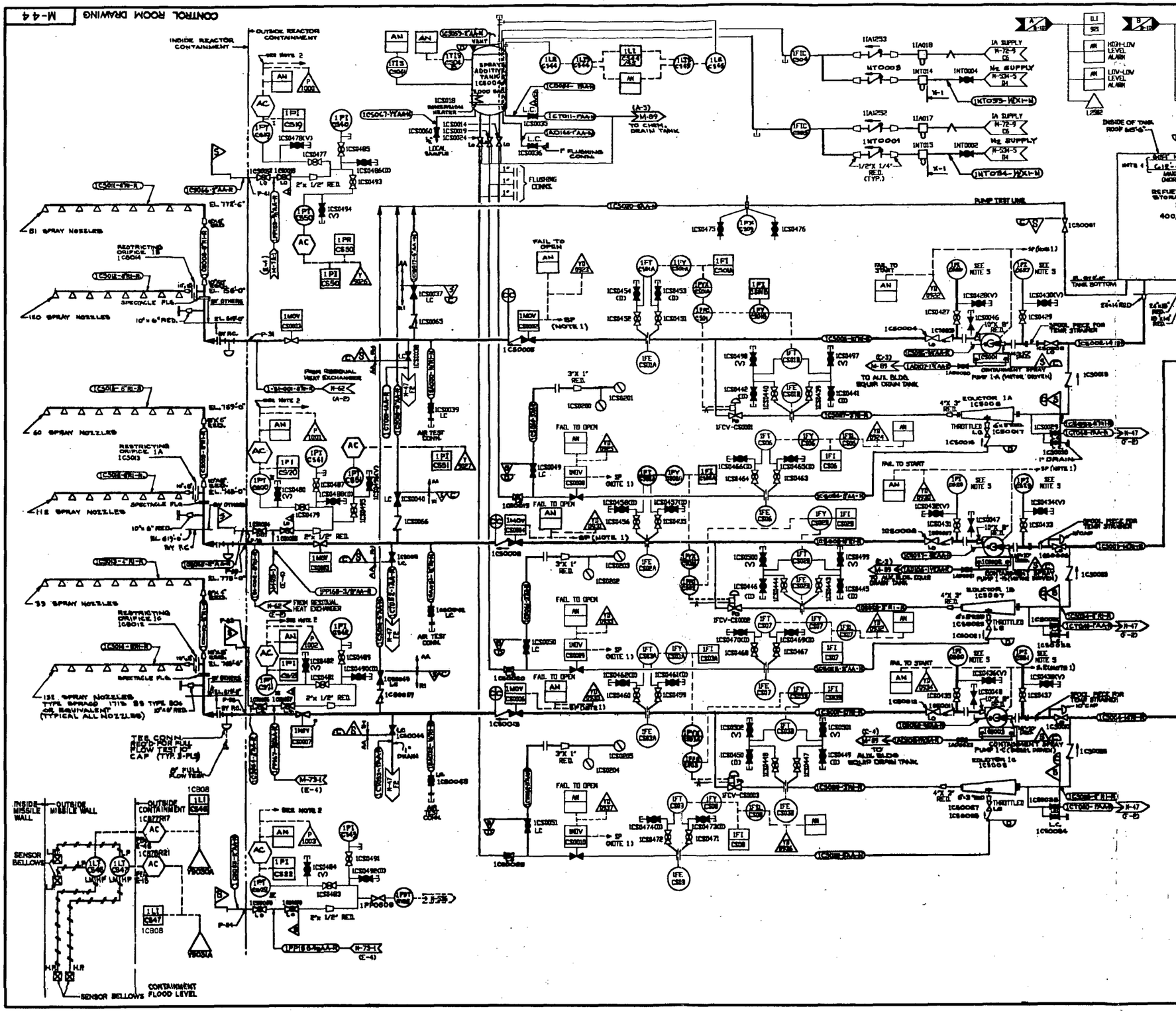

NOTES:

1. SP DENOTES ACTUATION BY COINCIDENCE OF SAFETY INJECTION & HIGH-HIGH CONTAINMENT PRESSURE.
2. TO HIGH CONTAINMENT PRESSURE SAFETY SIGNAL FOR CONTAINMENT SPRAY SYSTEM.
3. DELETED
4. NORMAL WATER LEVEL IS TO BE MAINTAINED BETWEEN THESE TWO SETTINGS.
5. THESE PRESSURE INDICATORS HAVE IN-LINE PRESSURE DAMPENING DEVICES.

ASME CODE RELATED AND NUCLEAR SAFETY RELATED ITEMS ARE SHOWN ON THIS DRAWING

CONTROL ROOM DRAWING

ZION STATION UFSAR

M-44 Rev.JQ 04/10/96

Figure 6.5-1

DIAGRAM OF CONTAINMENT SPRAY SYSTEM

MAY 1996

6.6 INSERVICE INSPECTION OF CLASS 2 AND 3 COMPONENTS

This section describes the Inservice Inspection (ISI) Program for Quality Group B and C components.

6.6.1 Components Subject to Examination

All Quality Group B and C components, including those listed in the ASME Boiler and Pressure Vessel (B&PV) Code, Section XI, Tables IWC-2500-1 and IWD-2500-1 (see References 1 and 2), are examined, to the fullest extent possible, in accordance with the code requirements. When specific exceptions are identified, applicable relief requests will be included in the ISI Program.

The ISI Program is in accordance with 10CFR50.55a(g).

6.6.2 Accessibility

Class 2 systems were designed and fabricated before the examination requirements of the ASME B&PV Code, Section XI were formalized. Therefore, some examinations for Class 2 components are limited due to geometric configuration or accessibility. The design arrangements of Class 3 system components provided, to the extent possible, adequate clearances to conduct code required examinations. When specific exceptions regarding the accessibility of either Class 2 or 3 components are identified, relief requests will be included in the ISI Program.

6.6.3 Examination Techniques and Procedures

The examination techniques and procedures described in the ASME B&PV Code, Section XI are used to the extent possible. When specific exceptions are identified, alternate techniques and procedures will be described and justified in the ISI Program.

6.6.4 Inspection Intervals

An inspection schedule for Class 2 and 3 system components has been developed with the guidance of 10CFR50.55a and the ASME B&PV Code, Section XI, Subarticles IWC-2400 and IWD-2400 (see References 1 and 2). Whenever these requirements cannot be met, the specific exception will be identified in a relief request and will be included in the ISI Program.

6.6.5 Examination Categories and Requirements

ISI categories for Class 2 and 3 system components are in agreement with the ASME B&PV Code, Section XI, Subarticles IWC-2500 and IWD-2500 (see References 1 and 2). Whenever the requirements cannot be met, the specific exception will be identified in a relief request and will be included in the ISI Program.

6.6.6 Evaluation of Examination Results

Evaluation of the examination results and repair procedures for Class 2 and 3 components complies with the requirements of the ASME B&PV Code, Section XI, Articles IWC and IWD-3000 and 4000 (see References 1 and 2).

6.6.7 System Pressure Tests

The program for Class 2 and 3 system pressure testing complies with the criteria of the ASME B&PV Code, Section XI, Articles IWC-5000 and IWD-5000 (see References 1 and 2). Whenever the requirements of these criteria cannot be met, the specific exception will be identified and a relief request will be included in the ISI Program.

6.6.8 Augmented Inservice Inspection to Protect Against Postulated Piping Failures

This subsection title has been created in order to implement the UFSAR format delineated by Regulatory Guide 1.70, Revision 3. However, the section is not used due to the level of detail required at the time of license application and subsequent revisions.

6.6.9 References, Section 6.6

1. ASME Boiler and Pressure Vessel Code, Section XI, Rules for Inservice Inspection of Nuclear Power Plant Components, Subsection IWC, Requirements for Class 2 Components of Light-Water Cooled Power Plants.

2. ASME Boiler and Pressure Vessel Code, Section XI, Rules for Inservice Inspection of Nuclear Power Plant Components, Subsection IWD, Requirements for Class 3 Components of Light-Water Cooled Power Plants.

6.7 MAIN STEAM ISOLATION VALVE LEAKAGE CONTROL SYSTEM

This section is not applicable to Zion Station.

6.8 AUXILIARY FEEDWATER SYSTEM

6.8.1 Design Basis

The function of the Auxiliary Feedwater (AFW) System is to provide adequate cooling water to the steam generators in the event of a unit trip coupled with a loss of offsite power. One of the two motor-driven AFW pumps supplying the four steam generators will provide enough feedwater to safely cool the unit down to the temperature at which the Residual Heat Removal (RHR) System can be utilized. The single turbine-driven AFW pump has twice the capacity of either motor-driven pump.

The AFW System has been designed as Seismic Class I with the exception of the suction supply from the condensate storage tank (CST). All components are protected from missiles which could result from a loss-of-coolant accident (LOCA) and all Seismic Class I components are protected from tornado damage. In the event of tornado damage to the condensate storage tank, the Seismic Class I Service Water (SW) System is available as a backup to provide suction to the AFW pumps. The SW System is protected from tornado damage.

6.8.2 System Design and Operation

The Auxiliary Feedwater (AFW) System consists of two subsystems, one of which utilizes a single turbine-driven pump, the other consisting of two motor-driven pumps. Each of the two subsystems can deliver feedwater to all four steam generators. Equipment redundancy, flow paths, Seismic Class I boundaries, and system operation are illustrated on the system diagrams (Figures 6.8-1(1) and 6.8-1(2)).

The motor-driven pumps are started on either a low-low level in any steam generator, any safety injection signal, manual start signal, associated engineered safety feature (ESF) bus second level undervoltage signal present for greater than a timed interval, anticipated transient without scram (ATWS) signal, or a blackout signal. The turbine-driven pump will start on either a low-low level in any two steam generators, any safety injection signal, manual start signal, ESF bus 149(249) second level undervoltage signal present for greater than a timed interval, blackout signal, ATWS signal, or undervoltage on two-of-four reactor coolant pump buses.

The motor-driven and turbine-driven pumps have selector switches on local subpanels near each AFW pump which permit transferring pump controls from remote to local. These selector switches are provided with pilot lights and an alarm is sounded in the control room when pump controls are transferred to local.

A motor-driven AFW pump and its suction valve motor-operator are supplied with power from the same essential service bus. Each pump and valve pair

are powered from different essential buses. Therefore, the loss of one bus will not cause the loss of all auxiliary feedwater supply.

Both motor-driven pumps and all motor-operated valves are supplied with emergency power from the diesel generators. The AFW System meets the control grade requirements of NUREG-0578 (see Reference 1). The turbine-driven pump can be operated independent of any alternating current power

source. All the pumps can be operated independent of their auxiliary lube oil pumps.

Steam for the turbine-drive can be taken from the Seismic Class I portion of either of two main steam lines. Exhaust from the turbine is discharged to the atmosphere. Steam from either line, at any pressure condition possible when feedwater is required, will be adequate for operation of the turbine drive. Auxiliary feedwater pump protection is provided by a low suction pressure trip. The turbine-driven auxiliary feedwater pumps are also provided with a lube oil pressure trip.

All three pumps have sufficient head to deliver their rated capacity to the steam generators at the safety valve setpoint. Steam generator J-tubes have been installed to minimize the potential for water hammers.

Auxiliary feedwater control is accomplished manually by means of throttling the motor-operated valves. The motor-operated valves can be operated from the main control board or from a local control panel. Each of the valves in the two AFW lines for one steam generator have power supplied from different essential buses.

Auxiliary feedwater flow and pressure and steam generator level are indicated on the main control board and the local control panel.

Suction to the pumps is provided by the CST or, as a backup, the SW System. A minimum of 170,000 gallons are required to provide for two hours at hot standby followed by four hours of cooldown at 50°F per hour. Adequate CST level indication and level alarms are provided on the CST to indicate the level and when makeup to the tank is required. This will assure that normal use of the tank does not encroach upon the requirements of the AFW System.

Operating procedures and valve lineup sheets require that manual valves that could interrupt normal flow to and from any AFW pump be locked open. The only exception is the manual valve in the turbine-driven pump's backup supply which is normally closed to prevent secondary system contamination. Procedures for transferring to alternate sources of AFW supply are available to plant operators. A procedure that outlines the actions to be taken in the event that auxiliary feedwater cannot be delivered to the steam generators is available to plant operators.

An endurance test was performed on each AFW pump and all parameters were within operating limits. All pumps successfully completed their endurance test. The maximum AFW pump area temperature is not high enough to degrade any equipment such that safe shutdown of the plant cannot be accomplished.

Appendix 6C is a list of changes performed on the AFW system to satisfy NRC requirements.

6.8.3 Component Description

6.8.3.1 Auxiliary Feedwater Pumps

The design information for the turbine-driven and motor-driven AFW pumps is given in Table 6.8-1. The turbine-driven AFW pump turbine drive and motor-driven AFW pump motor design information is given in Table 6.8-2.

6.8.3.1.1 Nondestructive Testing

All pressure-containing parts have been chemically and physically analyzed and the results checked to ensure conformance with the applicable American Society for Testing and Materials (ASTM) Specification. In addition to visual inspection, all rough cast surfaces and all finished machined surfaces of pressure-containing parts have been magnetic particle inspected in accordance with the ASME Boiler and Pressure Vessel (B&PV) Code, Section VIII, Appendix 7 (see Reference 2).

Pressure-containing welds have been radiographed in accordance with the ASME B&PV Code, Section VIII, Paragraph UW-51 (see Reference 3), and subsequently magnetic particle inspected in accordance with the ASME B&PV Code, Section VIII, Appendices 6 and 7 (see References 4 and 2). Nonpressure-containing welds have been magnetic particle inspected.

The pressure-containing parts have been hydrostatically tested for 30 minutes in accordance with the ASME B&PV Code, Section VIII, Paragraph UG-99 (see Reference 5).

Low pressure sections of the steam turbine drives have been hydrostatically tested to $1^1/_2$ times the maximum design pressure.

6.8.3.2 Condensate Storage Tank

The CST design information is given in Table 6.8-3.

6.8.3.2.1 Nondestructive Testing

The CST has been leak tested and all welded joints have been radiographed in accordance with the requirements of USA Standard (USAS) B96.1-1967 (see Reference 6). All nozzle welds have been liquid penetrant inspected.

6.8.3.3 Piping

The AFW pump discharge piping is seamless and conforms to the requirements of ASTM A333, Grade 6, Schedule 120 (see Reference 7). The seamless AFW

pump suction piping less than 10 inches in diameter conforms to the requirements of ASTM A106, Grade B, Schedule 40 (see Reference 8). Suction piping with a diameter greater than 10 inches has a 3/8-inch nominal wall thickness.

6.8.3.3.1 Nondestructive Testing

Buttwelded joints greater than 2 1/2 inches in the AFW pump discharge piping have been 100% radiographed in accordance with the ASME B&PV Code, Section I, Paragraph PW-51 (see Reference 9). The buttwelded joints greater than 2 1/2 inches in the Seismic Class I portion of the AFW pump suction piping have been 10% random radiographed in accordance with the ASME B&PV Code, Section I, Paragraph PW-51 (see Reference 9). In both the discharge and Seismic Class I portion of the suction piping, the finished weld of all buttwelds has been either liquid penetrant inspected or magnetic particle inspected in accordance with the ASME B&PV Code, Section VIII, Appendices 6 or 8 (see References 4 and 10).

For the Seismic Class III suction piping, nondestructive testing has been performed in accordance with USAS B31.1.0, 1967 (see Reference 11).

6.8.3.4 Fittings

The carbon steel fittings used for the AFW piping are buttwelded and conform to the requirements of ASTM A234, Grade WPB and USAS B16.9 (see References 12 and 13).

6.8.3.4.1 Nondestructive Testing

Fittings have been nondestructive tested to the same requirements as AFW piping given in Section 6.8.3.3.1.

6.8.3.5 Valves

The AFW pump normal path (Condensate System) suction valves are 150-pound, cast carbon steel gate valves conforming to the requirements of USAS B16.5 and ASTM A216, Grade WCB (see References 14 and 15). The valves are buttwelded to the AFW piping and use bolted bonnet, outside screw and yoke, and 11% to 13% chrome trim. These valves use solid or flexible wedge disk with renewable seat rings and seating surfaces that are a nickel alloy or hardened stainless steel.

The AFW back-up path (Service Water System) suction valves to the turbine-driven AFW pumps are 150-pound, carbon steel gate valves. The back-up path suction valves to the motor-driven AFW pumps are 150-pound, carbon steel butterfly valves.

The motor-operated discharge valves; MOV-FW0050, MOV-FW0051, MOV-FW0052, MOV-FW0053, MOV-FW0054, MOV-FW0055, MOV-FW0056, and MOV-FW0057 are 900-pound cast carbon steel conforming to the requirements of ANSI B16.34, 1977 and ASTM A216, Grade WCB (see References 16 and 15). These motor-operated valves use a special cage assembly.

AFW pump discharge check valves FW0031, FW0032, and FW0033 are 900 pound cast carbon steel conforming to the requirements of ASTM A352 Grade LCB (see Reference 18). These valves are lift check valves and use a resilient seat.

6.8.3.5.1 Nondestructive Testing

All Seismic Class I valve bodies have been 100% radiographed.

6.8.4 Testing of Components

All Auxiliary Feedwater (AFW) System pumps can be tested in any combination by use of the recirculation lines to the CST. The normal suction lines can be utilized for this purpose. Each motor-driven AFW pump is demonstrated operable at a minimum of once a month while the reactor is in Modes 1, 2 or 3. The turbine-driven AFW pump is demonstrated operable at a minimum of once a month while the reactor is in Modes 1 or 2. All AFW pumps are started simultaneously once during each operating cycle to show that they will start and run without tripping due to a low suction pressure transient. Each AFW pump auxiliary lube oil pump is run a minimum of once a week to ensure proper bearing lubrication.

6.8.5 References, Section 6.8

1. NUREG-0578, TMI-2, Lessons Learned Task Force Status Report and Short-Term Recommendations.

2. ASME Boiler and Pressure Vessel Code, Section VIII, Appendix 7, Examination of Steel Castings.

3. ASME Boiler and Pressure Vessel Code, Section VIII, Paragraph UW-51, Radiographic Examination of Welded Joints.

4. ASME Boiler and Pressure Vessel Code, Section VIII, Appendix 6, Methods for Magnetic Particle Examination (MT).

5. ASME Boiler and Pressure Vessel Code, Section VIII, Paragraph UG-99, Standard Hydrostatic Test.

6. USAS B96.1, Welded Aluminum-Alloy Storage Tanks, 1967.

7. ASTM A333, Specification for Seamless and Welded Steel Pipe for Low-Temperature Service.

8. ASTM A106 Specification for Seamless Carbon Steel Pipe for High Temperature Service.

9. ASME Boiler and Pressure Vessel Code, Section I, Paragraph PW-51, Acceptance Standards for Radiography.

10. ASME Boiler and Pressure Vessel Code, Section VIII, Appendix 8, Methods for Liquid Penetrant Examination (PT).

11. USAS B31.1.0, Power Piping.

12. ASTM A234, Specification for Piping Fittings of Wrought Carbon Steel and Alloy Steel for Moderated and Elevated Temperatures.

13. USAS B16.9, Factory-Made Wrought Steel Butt Welding Fittings.

14. USAS B16.5, Steel Pipe Flanges and Flanged Fittings.

15. ASTM A216, Specification for Steel Castings, Carbon, Suitable for Fusion Welding, for High Temperature Service.

16. ANSI B16.34, Valves - Flanged, Threaded, and Welding End.

17. ASTM B209, Specification for Aluminum and Aluminum-Alloy Sheet and Plate.

18. ASTM A352, Specification for Steel Casting, Ferritic and Martensitic, for Pressure-Containing Parts Suitable for Low-Temperature Service.

TABLE 6.8-1

AUXILIARY FEEDWATER PUMPS

	Motor-Driven	Turbine-Driven
Number	2 per unit	1 per unit
Type	Horizontal, diffuser, ten-stage with single suction first stage	
Material	cast steel	cast steel
Capacity (each)	495 gpm	990 gpm*
Net Developed Head	3099 ft	3099 ft
NPSH Available	39.1 ft	39.1 ft
NPSH Required	13 ft	20 ft

* Approximately 15 gpm of the 990 gpm is routed from the fifth stage of the pump to provide oil and bearing cooling.

TABLE 6.8-2

AUXILIARY FEEDWATER PUMP (TURBINE DRIVE AND MOTOR DRIVE)

TURBINE DRIVE	
Number	1 per Unit
Material	Cast Steel
Horsepower Rating	990 hp
Design Pressure	1085 psig
Steam Pressure	125 to 1085 psig
Steam Flow	46,000 lb/hr @ 1075 psi 14,000 lb/hr @ 125 psi
Speed at Full Capacity	3570 rpm
MOTOR DRIVE	
Number	2 per unit
Horsepower Rating	600 hp
Power Requirement	3 phase, 60 hz, 4000 V

TABLE 6.8-3

CONDENSATE STORAGE TANK

Number	1 per Unit
Material	Aluminum-ASTM B209, Alloy 5454, Temper H112 (see Reference 17)
Capacity	500,000 Gallons
Design Pressure	Atmospheric
Design Temperature	150°F
Ambient Temperature	-20°F to 100°F
Code	USAS B96.1-1967
Heaters	Electric Immersion, 500 kW

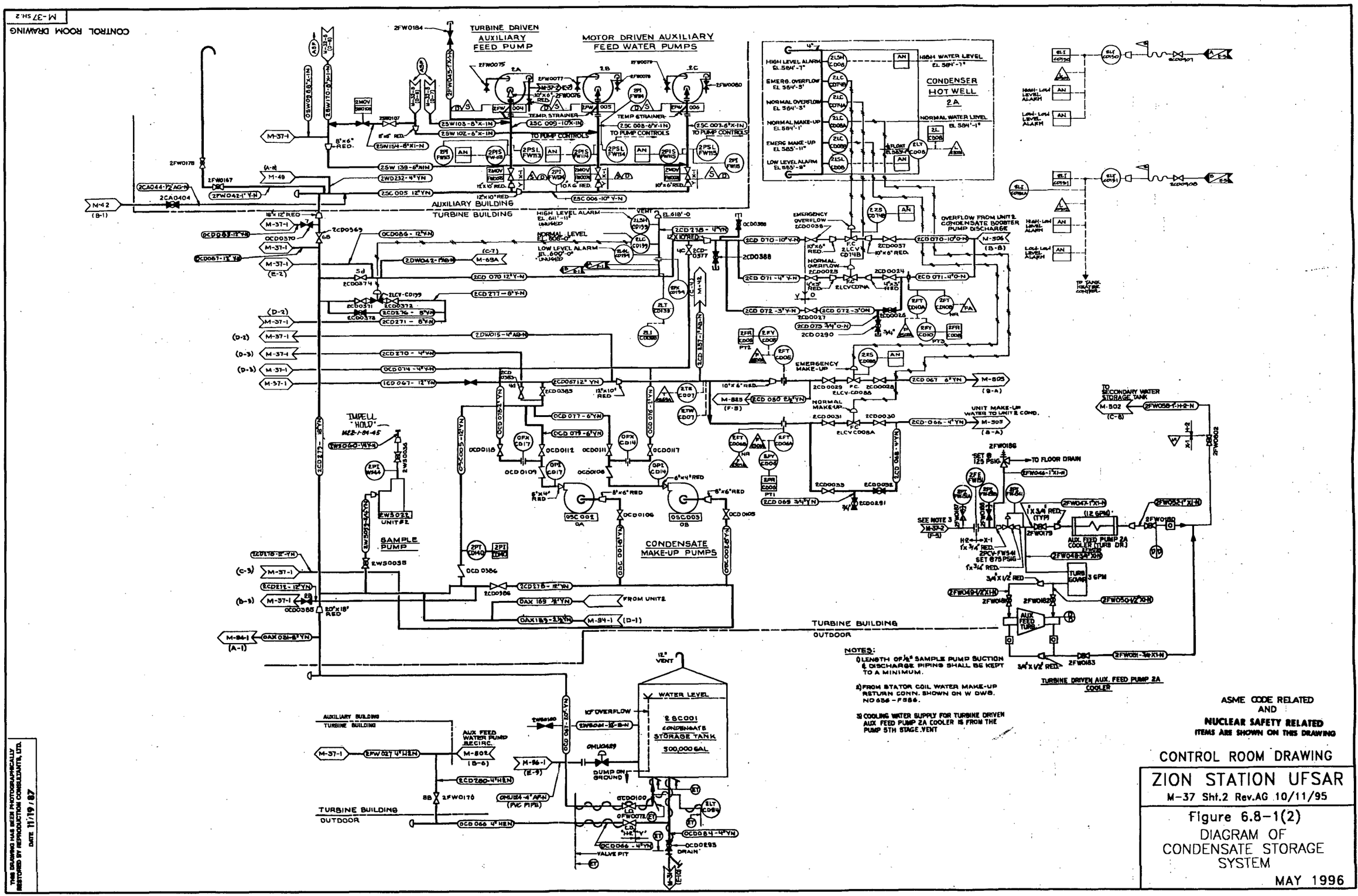
CONTROL ROOM DRAWING
M-37 Sh.2
TURBINE DRIVEN AUXILIARY FEED PUMP
MOTOR DRIVEN AUXILIARY FEED WATER PUMPS
CONDENSER HOT WELL 2A
AUXILIARY BUILDING
TURBINE BUILDING
TURBINE BUILDING OUTDOOR
SAMPLE PUMP
CONDENSATE MAKE-UP PUMPS
TO PUMP CONTROLS
TEMP. STRAINER
EMERGENCY MAKE-UP
NORMAL MAKE-UP
NORMAL OVERFLOW
OVERFLOW FROM UNIT 2 CONDENSATE BOOSTER PUMP DISCHARGE
UNIT MAKE-UP WATER TO UNIT 2 COND.
TO SECONDARY WATER STORAGE TANK
TO FLOOR DRAIN
FROM UNIT 2
TURBINE DRIVEN AUX. FEED PUMP 2A COOLER
AUX FEED PUMP 2A COOLER (TURB DR.)
AUX FEED WATER PUMP RECIRC.
WATER LEVEL
2SC001 CONDENSATE STORAGE TANK 500,000 GAL
DUMP ON GROUND
VALVE PIT
DRAIN
NOTES:
1) LENGTH OF 1/2" SAMPLE PUMP SUCTION & DISCHARGE PIPING SHALL BE KEPT TO A MINIMUM.
2) FROM STATOR COIL WATER MAKE-UP RETURN CONN. SHOWN ON W DWG. NO 656-F586.
3) COOLING WATER SUPPLY FOR TURBINE DRIVEN AUX FEED PUMP 2A COOLER IS FROM THE PUMP 5TH STAGE VENT
ASME CODE RELATED AND NUCLEAR SAFETY RELATED ITEMS ARE SHOWN ON THIS DRAWING
CONTROL ROOM DRAWING
ZION STATION UFSAR
M-37 Sht.2 Rev.AG 10/11/95
Figure 6.8-1(2)
DIAGRAM OF CONDENSATE STORAGE SYSTEM
MAY 1996
THIS DRAWING HAS BEEN PHOTOGRAPHICALLY RESTORED BY REPRODUCTION CONSULTANTS, LTD.
DATE 11/19/87

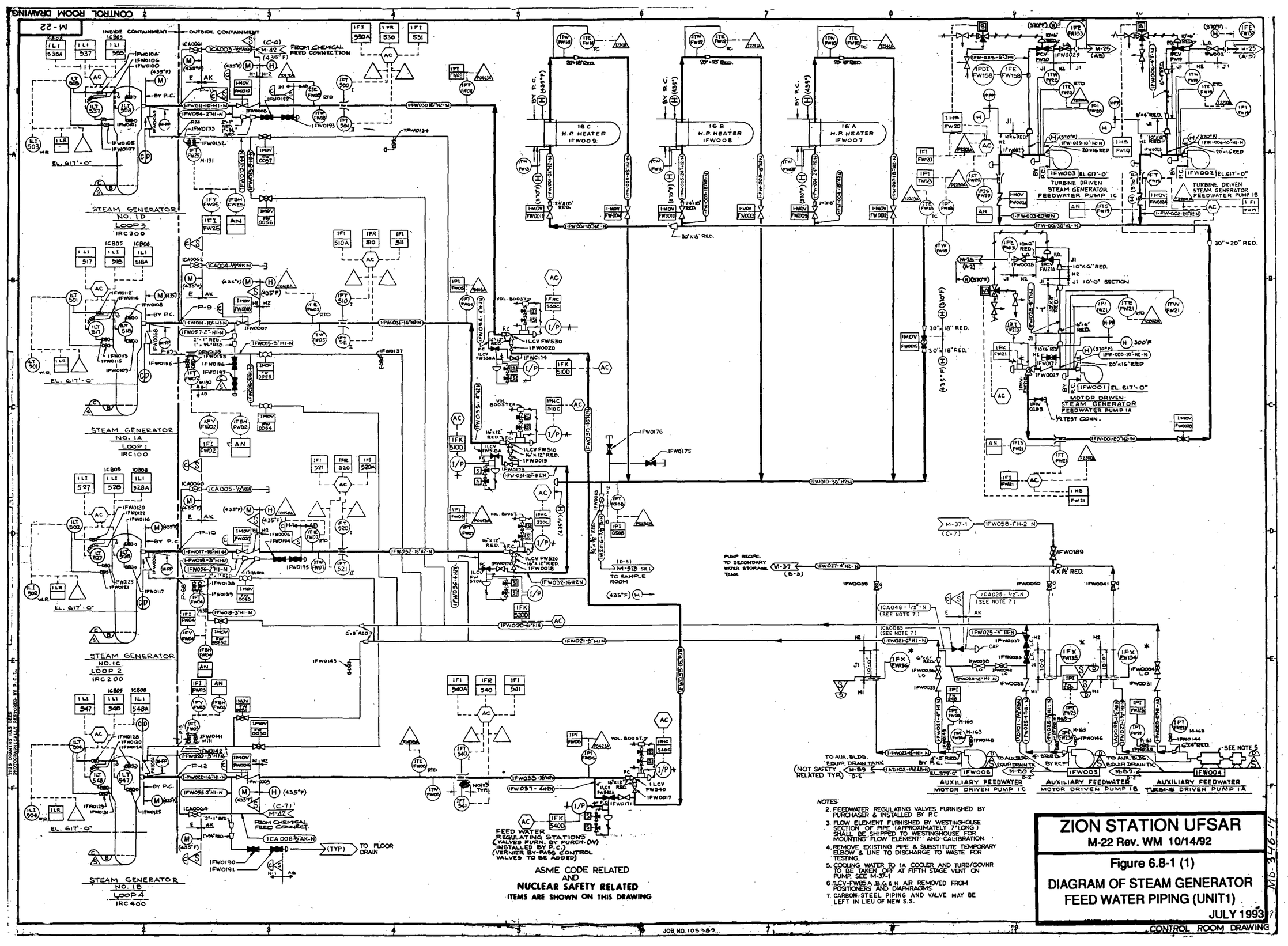

NOTES:

2. FEEDWATER REGULATING VALVES FURNISHED BY PURCHASER & INSTALLED BY P.C.
3. FLOW ELEMENT FURNISHED BY WESTINGHOUSE SECTION OF PIPE (APPROXIMATELY 7" LONG) SHALL BE SHIPPED TO WESTINGHOUSE FOR MOUNTING "FLOW ELEMENT" AND CALIBRATION.
4. REMOVE EXISTING PIPE & SUBSTITUTE TEMPORARY ELBOW & LINE TO DISCHARGE TO WASTE FOR TESTING.
5. COOLING WATER TO 1A COOLER AND TURB/GOVNR TO BE TAKEN OFF AT FIFTH STAGE VENT ON PUMP. SEE M-37-1
6. 1LCV-FW85 A, B, C & H. AIR REMOVED FROM POSITIONERS AND DIAPHRAGMS.
7. CARBON STEEL PIPING AND VALVE MAY BE LEFT IN LIEU OF NEW S.S.

ZION STATION UFSAR

M-22 Rev. WM 10/14/92

Figure 6.8-1 (1)

DIAGRAM OF STEAM GENERATOR FEED WATER PIPING (UNIT1)

JULY 1993

CONTROL ROOM DRAWING

APPENDIX 6A: THERMAL RECOMBINER DEMONSTRATION TEST

NOTE: This document was retyped for clarity in the 1992 UFSAR Update.

APPENDIX 6A

THERMAL RECOMBINER DEMONSTRATION TEST

J.O. HENRIE

Prepared for:
BOSTON EDISON COMPANY
DETROIT EDISON COMPANY
PHILADELPHIA ELECTRIC COMPANY
PUBLIC SERVICE ELECTRIC AND GAS COMPANY

Atomics International
North American Rockwell

P.O. Box 309
Canoga Park, California 91304

ISSUED: DECEMBER 8, 1972

Amendment 25
January, 1973

CONTENTS

TABLES

FIGURES

I. BACKGROUND

Thermal Recombiner Demonstration Tests were conducted for four participating utilities:

Boston Edison Company
Detroit Edison Company
Philadelphia Electric Company
Public Service Electric and Gas Company

A Program Plan, PP-001-690-001, was issued on June 23, 1972, and contains further background and planning information. This plan was issued to the participating utilities.

A test procedure, TP-001-690-001, was prepared and issued in draft form on July 25, 1972, to control the initial testing.

This test report summarizes the test objectives and test results, and describes the test equipment.

II. TEST OBJECTIVES

The objectives of the tests were to determine (1) the operational characteristics of the system, (2) reaction chamber temperatures for various air flow rates (30 to 75 scfm) and hydrogen concentrations (0.5 to 5%), which result in reacting essentially all of the hydrogen, (3) controller setpoints, for various gas flow rates and hydrogen concentrations, which will minimize high temperatures and thermal cycling during startup.

III. TEST RESULTS

The piping and instrumentation diagram for the Demonstration Test System is shown in Figure 1. A series of system tests were made on 18 different days. A correlated log of the tests including observations is recorded in North American Laboratory Note Book No. 5911, Pages 14 through 36.

Optimum control settings were determined for the following startup modes:

1) The air and hydrogen were both regulated at preselected flow rates as the system was heated up.

2) A predetermined flow of hydrogen was abruptly injected into a preselected flow of air with its preset temperature controlled at the heater exit.

The system was tested at 30, 50, 65, 75 scfm of various hydrogen air mixtures. Hydrogen concentrations in the air were varied from 0.5% to 5.2%. The system operated very well under all of these conditions. Hydrogen concentrations in the effluent were always below 0.1% when gas temperatures in the unique reaction chamber were 1300°F or higher. The tests show that wall temperatures throughout the system can be limited to less than 1400°F during startup and steady state operation, even with over 5% hydrogen in the process gas.

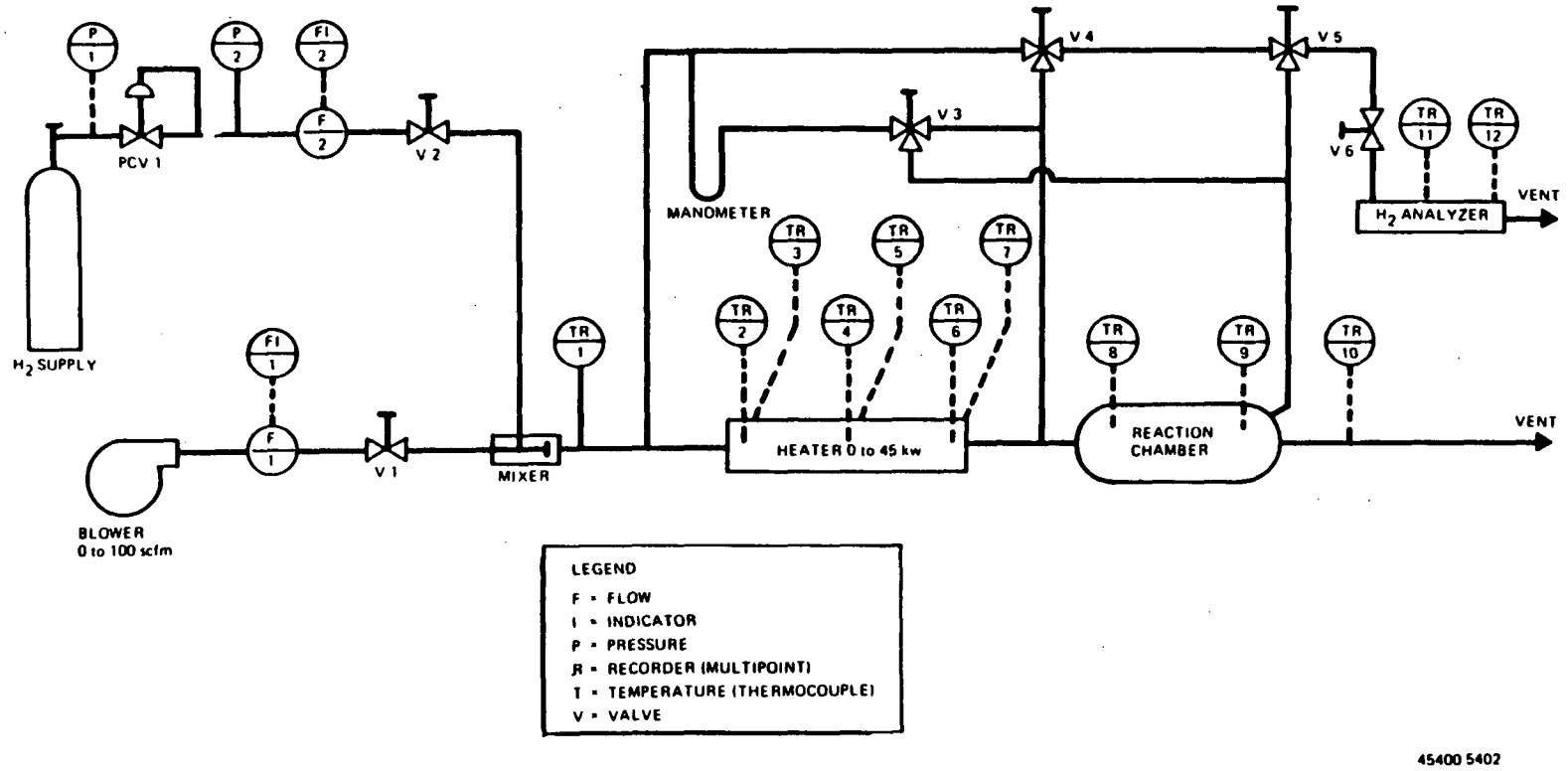

Figure 1. Thermal Recombiner Demonstration Test System, P&I Diagram

IV. TEST EQUIPMENT

The test equipment which comprises the thermal recombiner demonstration system was installed at Building 606 at Atomics International's Santa Susana Field Test Laboratory. Photographs of the installed equipment are shown in Figures 2 and 3. The major components of the system are separately discussed in the following sections.

1. Gas Heater

The heater was designed and built specifically for this thermal recombiner system.

At 50-scfm air flow and 30-kw heater power, a 30-minute heat-up time is required to bring the heater exit wall temperature to 1300°F. Approximately 20 kw are required to maintain this temperature.

2. Reaction Chamber

The reaction chamber was developed at AI prior to this series of tests. It is constructed entirely of stainless steel and can be coded as a pressure vessel in accordance with the ASME Boiler and Pressure Vessel Code.

3. Air Blower and Flowmeter

The blower for the system is a Master Fan, Size 510F, Type HP, with a 1-hp, 3500-rpm, drip-proof, 3-phase, 60-cycle, 460-volt motor.

Two Barco Venturi flowmeters were used. Tests up to September 21, 1972, utilized a 2-in. -483, Type VI and later tests utilized a 2-in. -636, Type VI flowmeter. The flowmeter outputs were read on a differential water manometer. Calibration curves for each flowmeter are shown in Figure 4. The data in Table 1 were taken with the heater turned off.

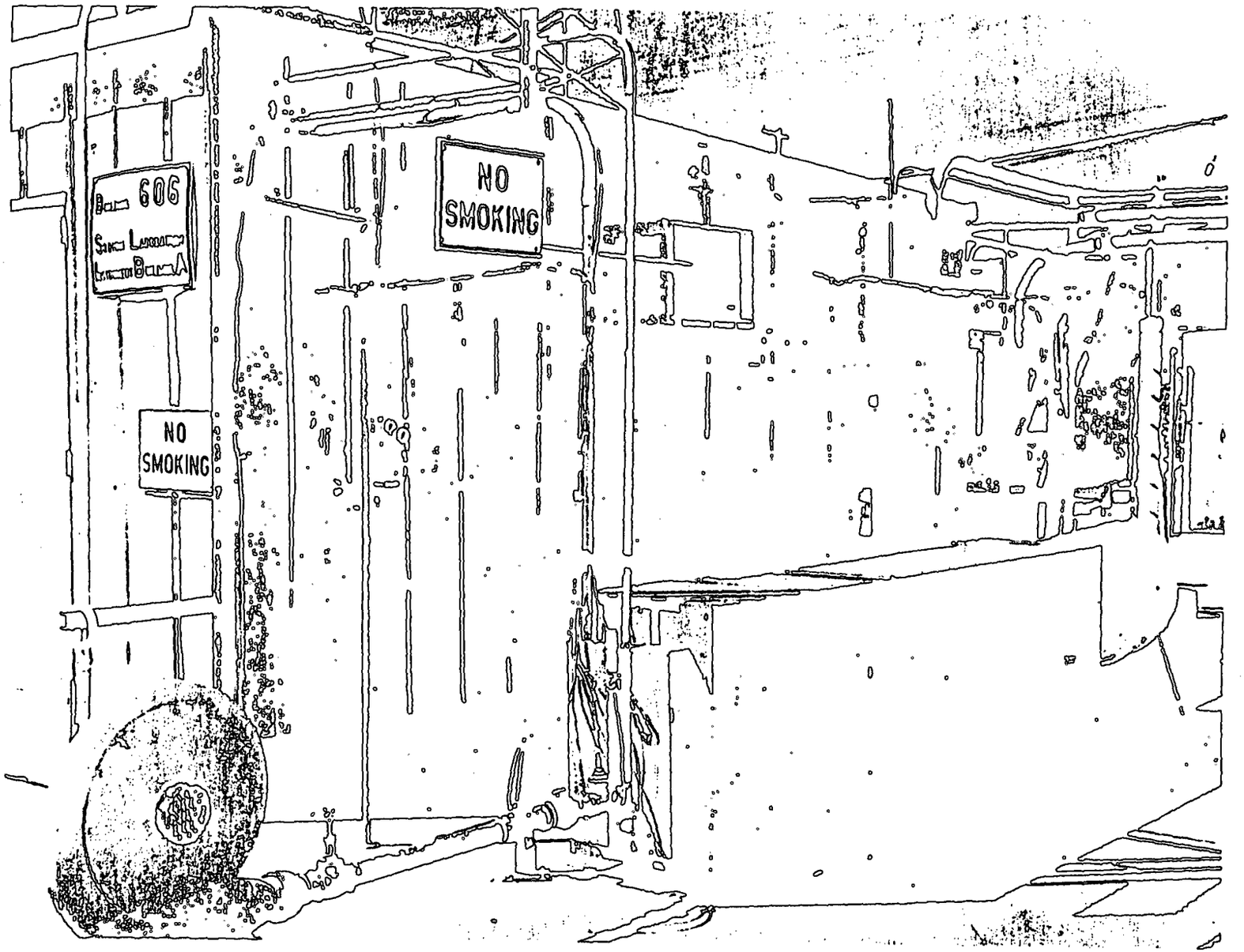

4008-4008

Figure 2. Thermal Recombiner Demonstration Test System

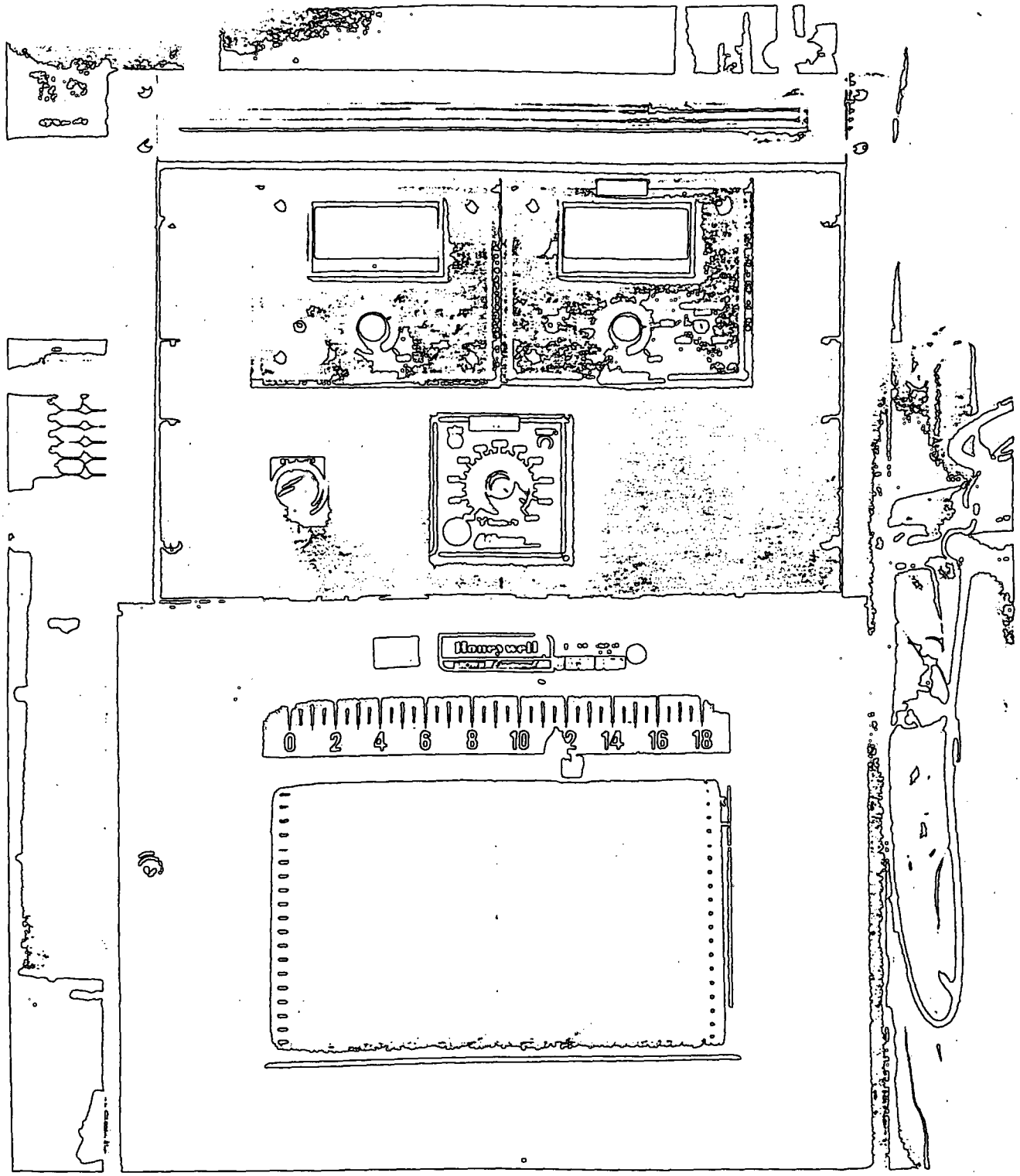

4008-1801

Figure 3. Thermal Recombiner Control Panel

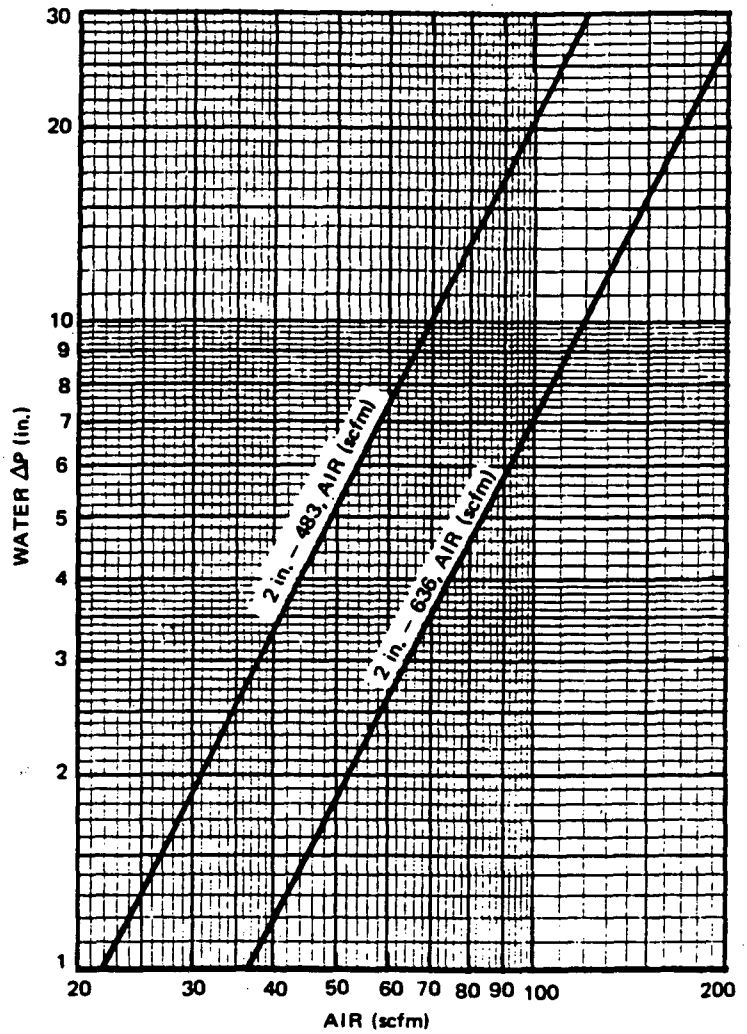

45400-5403

Figure 4. Air Flowmeter Calibration Curves

TABLE 1

SYSTEM FLOW CHARACTERISTICS WITH HEATER OFF

Valve Position (Turns from Closed)	Flow (scfm)*	Blower Pressure Rise (in. H_2O)	System Head Loss** (in. H_2O)
0	0	16.2	0
2	65	15.6	3.2
3	104	15.1	7.5
4	118	14.7	9.7
5	124	14.5	10.8
6	126	14.4	11.2
6-7/8	127	14.4	11.3

* Not corrected for the 14.3 psia and 70 to 90°F, pressure and temperature conditions.

** Downstream from the flowmeter, control valve, and hydrogen mixer.

The permanent head loss across the Size 483 flowmeter and the hydrogen mixer (valve removed) was 6.7 in. and the flow was limited to 107 scfm. Note from Table 1 that the permanent head loss across the Size 636 flowmeter plus the fully opened valve and the hydrogen mixer, was 3.1 in. of water and the flow was 127 scfm.

4. Hydrogen Supply and Regulation

Hydrogen from standard pressure bottles was regulated at 50 psig, then routed through a pressure relief valve, a blower-interlock solenoid valve, a Brooks flowrater, flow control valve and on to a hydrogen-air flowmixer. The calibration curve for the flowrater is shown as Figure 5. Two hydrogen bottles were used so that one could be replaced during operation.

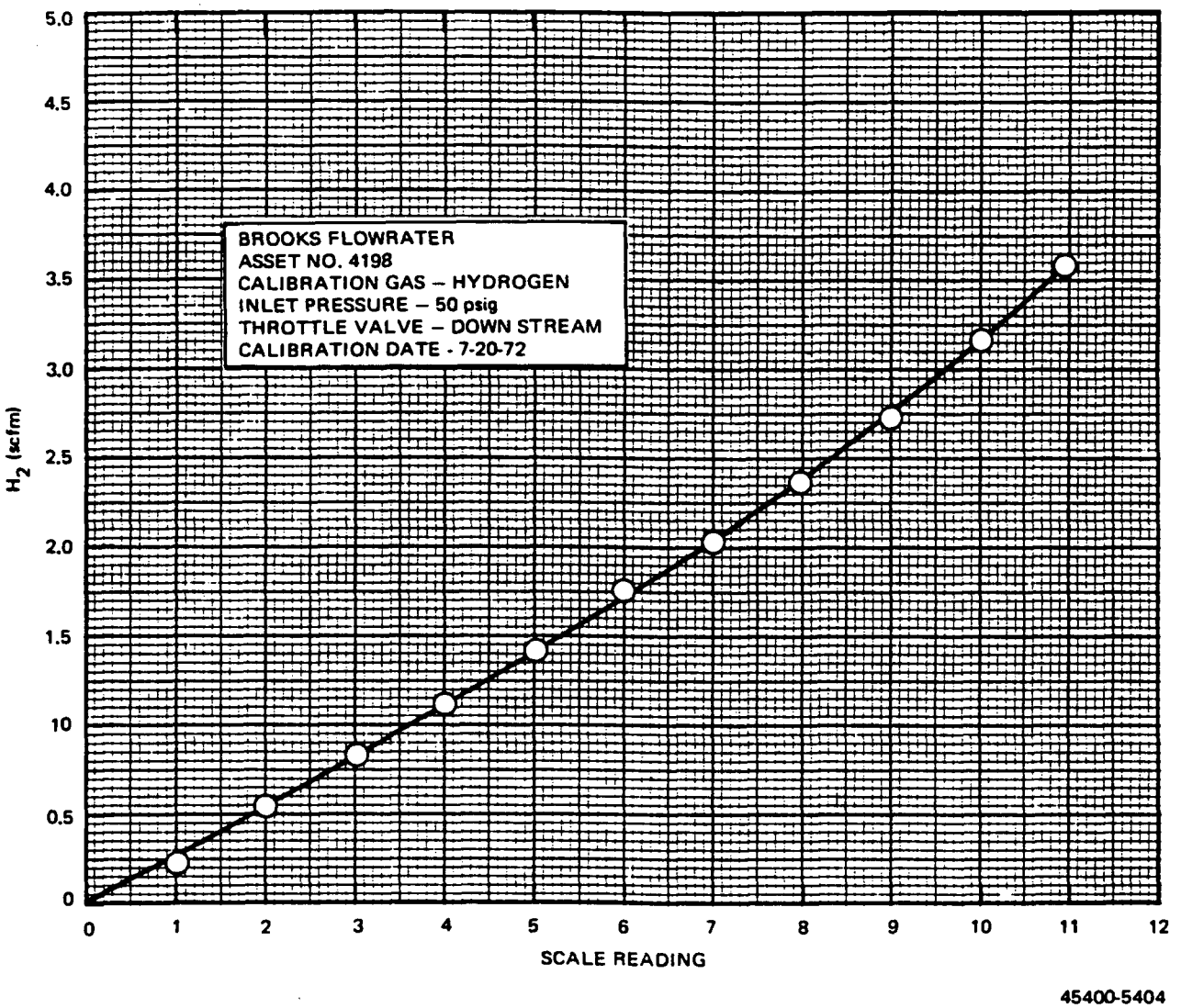

Figure 5. Hydrogen Flowmeter Calibration Curves

5. Hydrogen Analyzer

The hydrogen analyzer used was developed at Atomics International. Its input was piped and valved to enable sampling at the heater inlet, heater outlet, and reaction chamber outlet. The output was continuously recorded as TC-11 and TC-12 on the multipoint recorder.

The hydrogen analyzer had been accurately calibrated (see Figure 6), and operated well throughout the tests. Slight changes in either the air or hydrogen flow settings were easily detected by the analyzer. The only difficulty encountered was in regulating the flow to the analyzer since the pressure at the various sampling points differed greatly. The analyzer reads low by as much as 10% when the gas flow is greatly increased (a few hundred percent) or greatly decreased from the flow at which the system was calibrated. Sampling at the heater inlet position was inaccurate due to incomplete hydrogen-air mixing at that point.

6. Temperature Controls and Indicators

The temperatures of the gas in the heater near its outlet and the reacted gas in the reaction chamber are indicated and controlled by separate indicator-controllers. The signals from both controllers go to an auctioneer circuit which reduces the heater SCR power controller output when either or both of the control setpoints has been reached or exceeded.

A temperature switch with a variable setpoint is used as a heater protective circuit by opening the heater circuit breaker when the setpoint is exceeded. The breaker automatically closes when the overtemperature condition is corrected.

A 12-point recorder was used to record heater and reaction chamber temperatures and the hydrogen analyzer output.

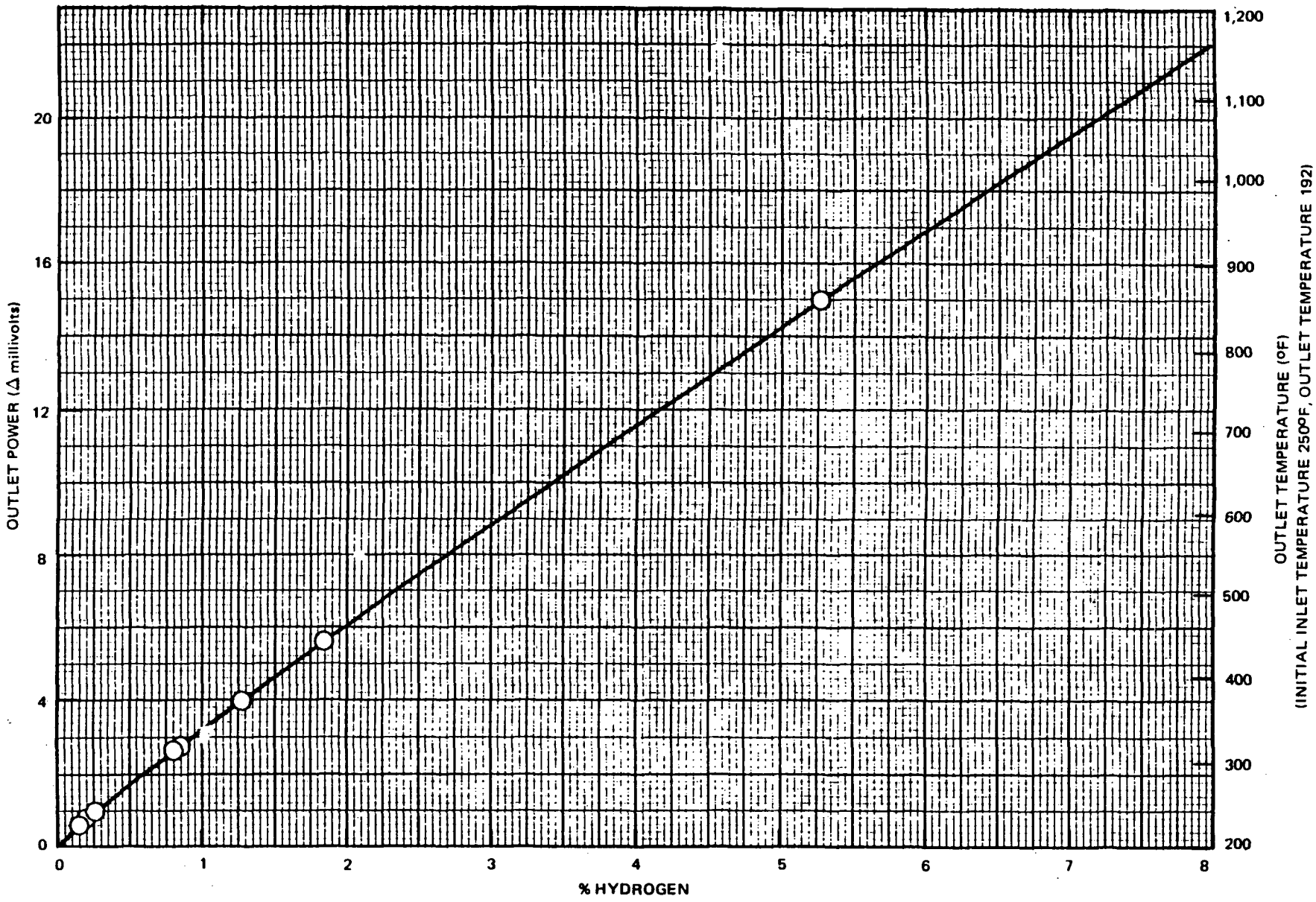

Figure 6. Hydrogen Analyzer Calibration Curve

APPENDIX 6B: IODINE REMOVAL EFFECTIVENESS EVALUATION OF CONTAINMENT SPRAY SYSTEM

NOTE: This document was retyped for clarity in the 1992 UFSAR Update.

APPENDIX 6B

IODINE REMOVAL EFFECTIVENESS EVALUATION OF CONTAINMENT SPRAY SYSTEM

1.0 INTRODUCTION

The containment spray system is an engineered safety system employed to reduce pressure and temperature in the containment following a postulated loss-of-coolant accident. For this purpose, subcooled water is sprayed into the containment atmosphere through a large number of nozzles from spray headers located in the containment dome.

Because of the large surface area between the spray solution and the containment atmosphere, the spray system also serves as a removal mechanism for fission products postulated to be dispersed in the containment atmosphere. Radioiodine in its various forms is the fission product of primary concern in the evaluation of a loss-of-coolant accident. The major benefit of the containment spray is its capacity to absorb molecular iodine from the containment atmosphere. To enhance this iodine absorption capacity of the spray, the spray solution is adjusted to an alkaline pH which promotes iodine hydrolysis to nonvolatile forms.

According to the known behavior of elemental iodine in highly dilute solutions the hydrolysis reaction

$$I_2 + OH^- \rightleftharpoons HIO + I^-$$

proceeds nearly to completion[1] at pH > 8. The iodide form is highly soluble, and HIO readily undergoes additional reactions to form iodate.

The overall reaction is:

$$3I_2 + 3H_2O \rightleftharpoons 5HI + HIO_3$$

Values for the spray removal half-life of the molecular iodine in a typical containment are on the order of minutes, or less. This makes the spray system a very efficient fission product removal system, in comparison to such alternatives as charcoal filtration systems.

2.0 CONTAINMENT SPRAY IODINE REMOVAL MODEL

Containment spray performance has been determined using the spray model developed by Westinghouse. The details of this model are described in Appendix A and B of Reference 2. This model includes the effects of spray drop size distribution, droplet coalescence, and liquid phase mass transfer resistance. Its use results in conservative values of spray iodine removal constants when compared with test results as reported in Chapter 4 of Reference 2.

2.1 Method of Calculation

Size dependent models were programmed to be calculated for discrete size parameters, i.e., the calculations are repeated for incremental height steps, and for 40 different drop-size groups to represent the effects of the drop-size distribution. No significant effect on results was observed by increasing the number of groups. The resulting model with discrete size-dependent parameters has been programmed for a digital computer.

In the computer code, the sprayed volume of the containment is divided into layers of incremental height and area equal to the total sprayed area at any height z. The height-dependent calculations such as trajectory and coalescence, are performed for each height step, using the parameters calculated in the previous step as input for the next step.

2.2 Drop Size Distribution

The drop-size distribution used in the model is based on data obtained from measurements of the actual size distribution from the Spraco 1713 nozzle for the range of pressure drops encountered during operation of the spray system. The results obtained for 20, 30, 40, and 50 psi pressure drops across the nozzle have been used in this evaluation.

Analysis of these drop-size measurements shows that the drop-size distribution may be represented by a continuous distribution function.

2.3 Condensation

As the spray solution enters the high temperature containment atmosphere, steam will condense on the spray drops. The amount of condensation is easily calculated by a mass balance on the drop:

$$mh + m_c h_g = m' h_f$$

where:

m and m′	-	are the mass of the drop before and after condensation, lbs.
m_c	-	is the mass of condensate, lbs.
h	-	is the initial enthalpy of the drop, Btu/lb.
h_g and h_f	-	saturation enthalpy of water vapor and liquid, Btu/lb.

Then:

$$\left(\frac{d'}{d}\right)^3 = \left(\frac{v_f}{v}\right)\left(\frac{h_g - h}{h_{fg}}\right)$$

where:

v_f	-	is the specific volume of liquid in ft^3/lb
v	-	is the specific volume of the drop before condensation, ft^3/lb
h_{fg}	-	is the latent head of evaporation in Btu/lb
d	-	is the drop diameter in cm

This increase in drop size due to condensation is expected to be complete in a few feet of fall for the majority of drop sizes in the distribution. More detailed calculations by Parsly[3] show that even for the largest drops in the distribution thermal equilibrium is reached in less than half of the available drop fall height. The change in the drop size distribution due to condensation was conservatively modeled by a step increase to the equilibrium size immediately after the drops emerge from the nozzle.

2.4 Drop Trajectories

A description of the actual drop trajectories is required to obtain accurate drop residence times, and to obtain the trajectory angle required for the coalescence calculations described below. These trajectories are obtained by integrating the equations of motion for each drop size.

The equations of motion were integrated numerically, with the drag coefficient being determined iteratively from Reynolds number and terminal velocity.

These calculations yield the following results:

a. Spread and Nozzle Interference

Typical trajectory results for a range of drop sizes show that the horizontal velocities of the drops are quickly attenuated. For the smaller drop sizes ($< 400\mu$) the trajectory essentially is a straight fall. Even for 1000μ drops, the horizontal velocity component diminishes to less than 10 percent of the total velocity in less than 10 feet. The effect of temperature and pressure on drop trajectories has also been calculated. The resulting spray envelope is of smaller diameter at higher temperatures and pressure.

b. Drop Residence Time

For downward-directed spray nozzles, the initial vertical velocity is higher than the terminal velocity, resulting in a slightly shorter residence time than that calculated with the assumption of terminal velocity. An accurate account of the residence time is obtained from consideration of the actual trajectories followed by the drop.

Correction factors are calculated for each drop size in the spectrum, so that the drop fall-times used for the iodine removal calculations are the actual drop residence times.

A measure of conservatism is added to the drop residence calculations by the use of the drop diameters after condensation. Actually, the drop velocities would have been attenuated to a fraction of the initial nozzle velocity by the time condensation is complete.

2.5 Drop Coalescence

This effect will tend to decrease the overall surface-to-volume ratio of the spray, thereby affecting the fission product removal capability of the system. Concern has been centered particularly on the effect of coalescence on scale-up factors applied to data obtained from small-scale experiments. The effects of this phenomenon are accounted for by a mathematical model which is independent of the containment size.

2.5.1 Mathematical Model

The mathematical model used to account for drop coalescence due to the effects of overlapping spray patterns and due to larger drops overtaking smaller ones shows the number of coalescences to be functions of the collision and coalescence efficiencies, as well as the trajectory angle, drop velocities, drop size, and drop density.

The coalescence efficiency is the probability that a collision will result in the formation of a single larger drop.

The collision efficiency describes the probability that two drops on a geometric collision course, (i.e., their centers of motion are separated by a distance less than the sum of the radii of the two drops) will actually collide.

2.5.2 Results

The results calculated with this model show that the smaller drops with diameters near the mode of the distribution are affected most. This is expected, since these sizes have the highest density of drop population. Due to the considerably larger volumes of the larger diameter drops, however, the increase in the larger drop population is not very pronounced.

The net effect of coalescence on the iodine removal efficiency is demonstrated by the change in spray surface area. Calculations show that the total reduction in the mass transfer surface area due to coalescence is approximately 10 percent.

2.6 Mass Transfer Model

The basic equation for the iodine concentration in the containment atmosphere is derived from a material balance of the elemental iodine in the containment. The iodine removal by the spray system may be expressed by

$$V_c \frac{dC_g}{dt} = -EF\ (HC_g - C_{L2})$$

where:

- V_c - containment free volume in cc
- C_g - is the iodine concentration in the containment atmosphere, gr/cc
- H - is the iodine partition coefficient, (gr/liter of liquid)/(gr/liter of gas)
- F - is the spray flow rate, cc/sec.

The variable E is the absorption efficiency, which may also be described as the fractional approach to saturation:

$$E = \frac{C_{L2} - C_{L1}}{C_L^* - C_{L1}}$$

where:

- C_{L1} - the iodine concentration in the liquid entering the dispersed phase, gr/cc
- C_{L2} - the iodine concentration in the liquid leaving the dispersed phase, gr/cc
- C_L^* - the equilibrium concentration in the liquid, gr/cc

This absorption efficiency may be calculated from the time-dependent diffusion equation for a rigid sphere, with the gas film mass transfer resistance as a boundary condition. This mass transfer model was suggested by L.F. Parsly,[4] who gives the solution to the diffusion equation with the above-mentioned boundary condition as:

$$E = 1 - \sum_{n=1}^{\infty} \frac{6Sh^2 \exp\ (-\alpha_n^2\ \theta_f)}{\alpha_n^2 \left[\alpha_n^2 + Sh\ (Sh-1)\right]}$$

where:

- Sh - is the dimensionless group $\frac{k_g \alpha}{HD_L}$
- α - is the drop radius, cm
- k_g - is the gas film mass transfer coefficient, cm/sec
- D_L - is the liquid diffusivity, cm^2/sec

θ_f - is the dimensionless drop residence time
α_n - are the eigenvalues of the solution

It should be noted that this solution, which applies to the rigid drop model, is based on the assumption that molecular diffusion is the only mechanism for the transport of iodine from the surface to the interior of the drop. Since a high degree of mixing is expected in the drops, particularly in the presence of sizable temperature and concentration gradients, it is apparent that this stagnant drop model presents a conservative approach to the calculation of iodine absorbtion by the drops.

The absorbtion efficiency calculated with the model described above is a function of drop size. The removal constant, λs, for the entire spray, therefore, is obtained by an appropriate summation over all drop size groups:

$$\lambda s = \sum_{i=1}^{n} \frac{E_i F_i H}{V_c}$$

3.0 EXPERIMENTAL VERIFICATION OF THE MODEL

To demonstrate that the ability of the model described above conservatively estimates actual spray performance, the Westinghouse model was applied to the test runs made at ORNL and BNWL. Comparison of the results of these tests with the above described spray removal model, show the spray removal model to be conservative in all cases.

4.0 SPRAY PERFORMANCE EVALUATION

4.1 Injection Phase Operation

The spray iodine removal analysis is based on the assumptions that:

a. Only two out of three spray pumps are operating

b. The emergency core cooling system (ECCS) is operating at its maximum capacity.

The latter assumption includes operation of 2 safety injection, 2 low head (RHR) pumps, and 2 charging pumps and conservatively limits the spray injection phase to 15 minutes. The ECCS is switched to the recirculation mode at this time when approximately 100,000 gallons remain in the refueling water storage tank. Operation of the spray system is continued for another 19 minutes in the injection mode, until the remaining 100,000 gallons are depleted. Thus the spray pumps will operate for a minimum of 34 minutes with fresh spray solution.

An eductor system, described in this chapter, is used to maintain the spray solution at a pH of 10.5 to insure efficient and rapid removal of the iodine from the containment atmosphere.

The performance of the spray system was conservatively evaluated at the peak temperature and pressure resulting from a double-ended rupture of the reactor coolant system, with no credit taken for the subcooling of the ECCS as discussed on page 15.6-37. These pressure and temperature conditions, listed in Table 6B-1, were used throughout the injection phase operation of the containment spray system.

The spray flow rate of 2615 gpm per pump, used in the calculation of λs, corresponds to this back-pressure in the containment.

The spray evaluation parameters listed in Table 6B-1 are based on one of the early containment response analyses. While the more recent LOCA containment peak pressure and temperature discussed Appendix 15D exceed the conditions of Table 6B-1, the overall spray evaluation remains sufficiently conservative for the reasons given below.

Since this peak pressure condition is expected to exist at most for a few minutes, and since both mass transfer parameters and spray flow rate improve with decreasing pressure, an appreciable margin is added to this evaluation by this assumption.

The removal constant for the spray system, calculated with the model described and with the above mentioned assumptions is 54 $hrs.^{-1}$.

4.2 Recirculation Phase

Under the assumptions stated in Section 4.1, the spray recirculation phase would be initiated 34 minutes after the start of safety injection. At this time, sump water has reached its minimum equilibrium pH of 9.0. Although the iodine removal capability remains high under these conditions, no credit is taken for any iodine removed after the decontamination factor (DF) of 100 is reached during the injection phase.

During the spray recirculation phase the sump pH will remain at 9.0, since no additional water is added to the system.

4.3 Re-evolution of Iodine

Any re-evolution of dissolved iodine from the sump to the containment atmosphere is dependent on the concentration gradient between the liquid and vapor phases. The equilibrium between these concentrations is given by the partition coefficient, H, and, therefore, is a function of iodine concentration, pH, and temperature. A plot of the sump alkalinity, as a function of the time after the start of injection, is shown in Figure 6B-1. The resulting partition coefficient, based on a constant iodine concentration equal to the concentration corresponding to a DF of 100 in the containment atmosphere, is shown in Figure 6B-2 for sump temperatures of 150°F and 212°F. The equations given by Eggleton[5] were used to calculate the partition coefficient.

Although the iodate reaction, i.e.

$$3I_2 + 3H_2O \rightleftharpoons IO_3^- + 5I^- + 6H^+$$

is expected to contribute significantly[5] to the iodine partition at the high sump pH values, this reaction is conservatively neglected in these calculations.

From Figure 6B-2 it is apparent that the partition coefficient of 4×10^3, which is required to maintain a DF of 100 in the vapor phase, is exceeded at all times during the recirculation phase.

REFERENCES, Appendix 6B

1) M.A. Styrikovich, et al., "Atomnoya Energiya," Volume 17, No. 1, pp. 45-49, July 1964 (Translation in UDE - 621.039.562.5).

2) WCAP-7499-L, W.F. Pasedag, "Elemental Iodine Removal by Reactive Sprays," 1970 (WNES Proprietary Class 2).

3) L.F. Parsley, Jr., "Design Considerations of Reactor Containment Spray Systems - Part VI," ORNL-TM-2412, Part 6, 1969.

4) L.F. Parsley, Jr., "Design Considerations of Reactor Containment Spray Systems - Part VII" ORNL-TM-2412, Part 7, 1970.

5) A.E.J. Eggleton, "A Theoretical Examination of Iodine-Water Partition Coefficient," AERE (R) - 4887, 1967.

TABLE 6B-1

SPRAY EVALUATION PARAMETERS

Power, MWt	3391
Containment Pressure, psia	57.3
Containment Temp., °F	267
Spray flow rate, gpm	5230
pH	10.5
Containment free volume, ft^3	2.86×10^6
Spray fall height, ft	147
λs (hrs^{-1})	54

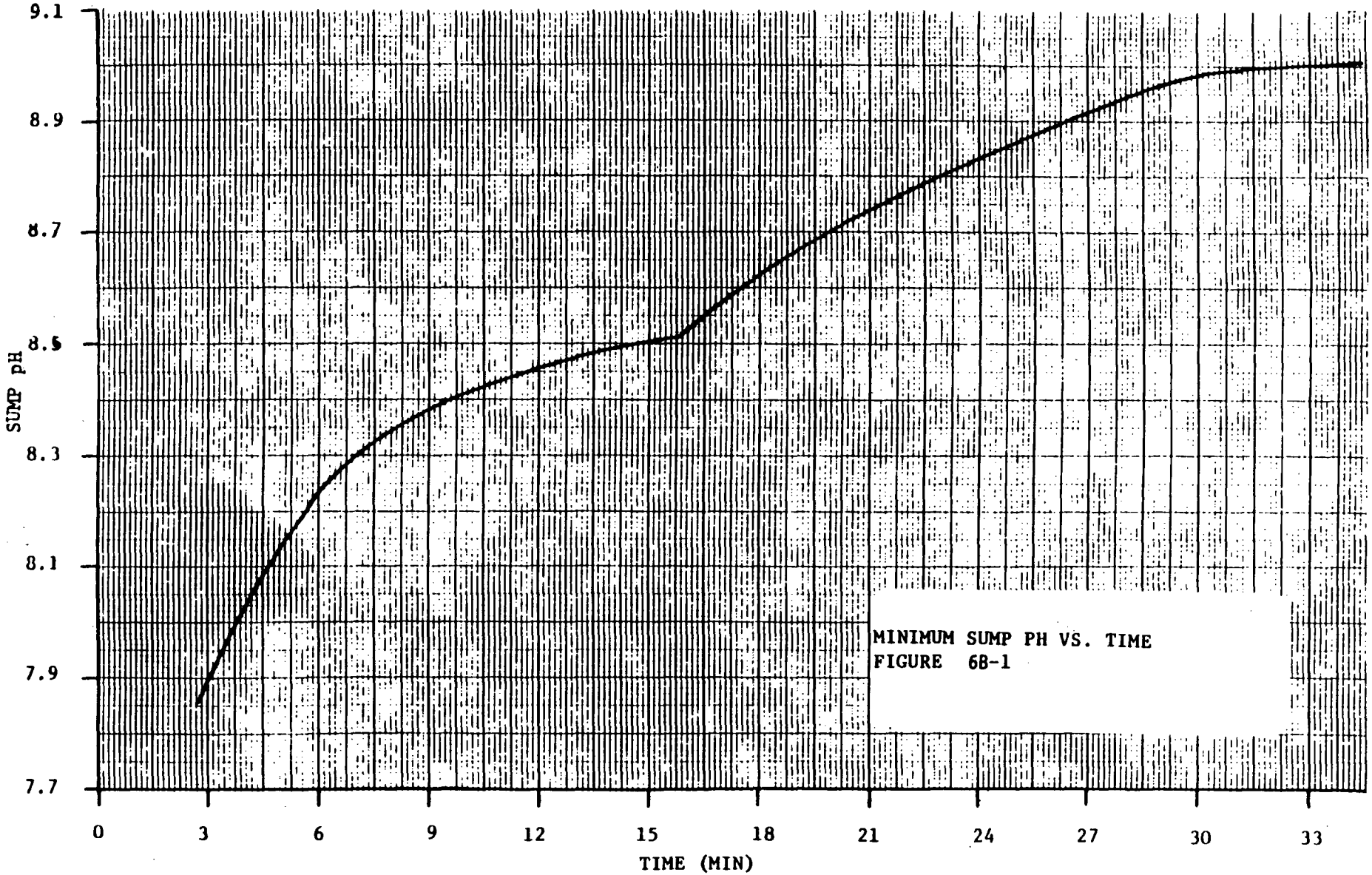

MINIMUM SUMP PH VS. TIME
FIGURE 6B-1

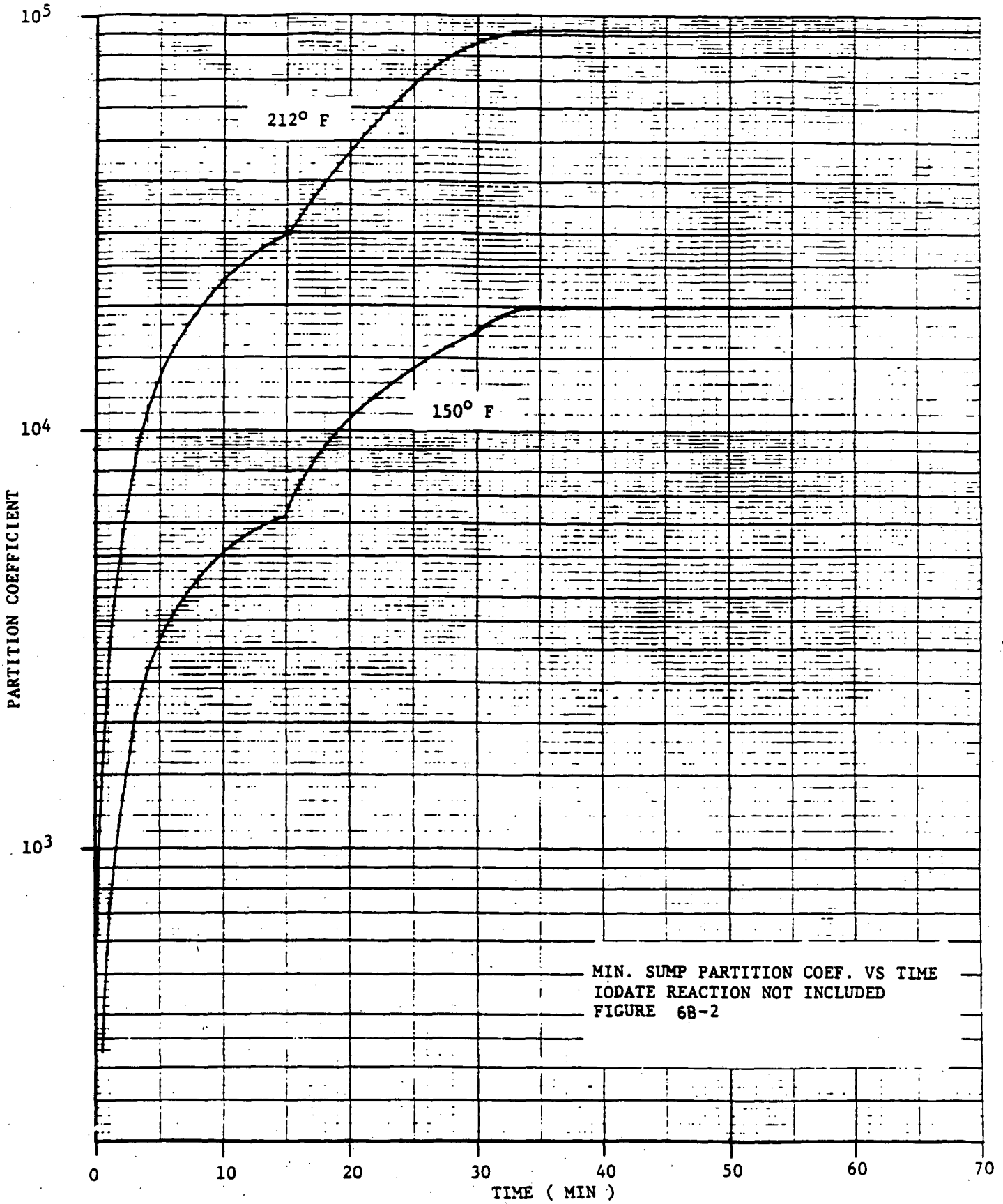

MIN. SUMP PARTITION COEF. VS TIME
IODATE REACTION NOT INCLUDED
FIGURE 6B-2

APPENDIX 6C NRC RELATED COMMITMENTS AND REGULATIONS FOR ZION STATION AUXILIARY FEEDWATER SYSTEM

6C NRC Related Commitments and Regulations for Zion Station Auxiliary Feedwater System

The AFW System has been modified to satisfy various NRC requirements as outlined below:

6C.1 Modifications: M22-1-79-50, M22-1-80-52, & M22-2-79-50

NRC Requirements for Auxiliary Feedwater Systems at Zion Station, Units 1 & 2 dated September 18, 1979 - Short Term Recommendations GS-5 & GS-7, Additional Short Term Recommendation 3 and Long Term Recommendations G1-3 & G1-5.

6C.2 Modifications: M22-1-79-11, M22-1-80-9, M22-1-80-10, M22-1-80-14, M22-1-77-51, M22-2-80-9, M22-2-80-10, & M22-2-80-14

NRC Requirements for Auxiliary Feedwater System at Zion Station, Units 1 & 2 dated September 18, 1979 - Short Term Recommendations GS-3.

6C.3 Work Requests: Z-11929 through Z-11944 SOI-10 App A-1 & A-2

6C.4 NRC Requirements for Auxiliary Feedwater System at Zion Station Units 1 & 2 dated September 18, 1979 - Short Term Recommendations GS-2 and GS-6 and Additional Short Term Recommendations 4.
AOP-14
PT-7
SOI-10 App A-1 & A-2
GOP-1
AIR No. 35-80

6C.5 NRC Requirements for Auxiliary Feedwater System at Zion Station, Units 1 & 2 dated September 18, 1979 - Short Term Recommendation GS-4.
AOP-14 App B

6C.6 NRC Requirements for Auxiliary Feedwater System at Zion Station, Units 1 & 2 dated September 18, 1979 - Long Term Recommendation 6.
AOP-16

6C.7 NRC Requirements for Auxiliary Feedwater System at Zion Station, Units 1 & 2 dated September 18, 1979 - Additional Short Term Recommendations 1.

Modifications M22-1-79-51, M22-1-79-52, M22-2-79-51, & M22-2-79-52

6C.8 NRC Requirements for Auxiliary Feedwater System at Zion Station, Units 1 & 2 dated September 18, 1979 - Additional Short Term Recommendations 2.
Letter K.L. Graesser to J.S. Abel; subject Report of Endurance Tests for Auxiliary Feedwater Pumps at Zion Station, dated August 12, 1980.
Letter W.F. Naughton to P.G. Eisenhut dated March 18, 1980 on Aux FW Pump Room Temperature Analysis.

6C.9 NRC Requirements for Auxiliary Feedwater System at Zion Station, Units 1 & 2 dated September 18, 1979 - Long Term Recommendation GL-4. Modifications M22-1-81-67 and M22-2-81-67

TABLE OF CONTENTS

TABLE OF CONTENTS

TABLE OF CONTENTS

TABLE OF CONTENTS

TABLE OF CONTENTS

TABLE OF CONTENTS

TABLE OF CONTENTS

TABLE OF CONTENTS

TABLE OF CONTENTS

LIST OF TABLES

LIST OF FIGURES

LIST OF FIGURES

7. INSTRUMENTATION AND CONTROLS

7.1 INTRODUCTION

Instrumentation and control systems provide the reactor operator with required information and control capability to operate the plant in a safe and efficient manner. Where safety functions are involved or many routine operations are needed, logic circuitry and actuators are provided to execute equipment actions without operator help.

Instrumentation and control systems are broadly classified as being either a protection system (7.2 and 7.3) or a control system (7.7). Because of their specific importance, the Reactor Protection System (RPS) (7.2), the engineered safety features (ESF) circuits (7.3) and nuclear instrumentation (7.6.1) are discussed in separate parts of this chapter. Other specific design features or topics also discussed separately include: safety-related display instrumentation (7.5), incore instrumentation (7.7.1.2) and operating control stations (7.7.1.4).

Instrumentation and controls are provided to monitor and maintain all operationally important reactor operating parameters such as neutron flux, system pressures, flow rates, temperatures, levels and control rod positions within prescribed operating ranges. The quantity and types of instrumentation provided are adequate for safe and orderly operation of all systems and processes over the full operating range of the plant.

Process variables which are required on a continuous basis for the startup, power operation, and shutdown of the plant are indicated in, recorded in, and controlled as necessary from the Control Room, which is a controlled access area. The operating staff is cognizant and in control of all tests, maintenance, and calibration work and can fully assess all abnormal plant conditions knowing the extent to which specific and related operating tasks are in process.

Criteria for instrumentation wires, cables, trays, and conduits are discussed in Section 7.1.2 and in Section 8.3.

Several criteria related to all instrumentation and control systems, but more specific to other plant features or systems, are discussed in other chapters, as listed:

Criterion	Discussion
Suppression of Power Oscillations	Chapter 4
Reactor Core Design	Chapter 4
Quality Standards	Chapter 1
Performance Standards	Chapter 1

Fire Protection	Chapter 9
Missile Protection	Chapter 3 and 6
Emergency Power	Chapter 8

7.1.1 Identification of Safety-Related Systems

The protection system consists of both the RPS and the ESF Actuation System. All equipment from the sensors to the actuating devices is considered a part of the protection system. The ESF Actuation System is discussed in Section 7.3 and the RPS is discussed in Section 7.2.

The quality assurance procedures and programs utilized for the protection system are the same as those discussed in Chapter 17. The Gamma-Metrics RCS-300 Neutron Flux Monitoring System (NFMS) or Nuclear Instrumentation System (NIS) provides source range and intermediate range neutron flux signals to the reactor protection system. All other features of the protection systems which actuate a reactor trip and ESF action are designed and/or built by Westinghouse and conform to the intent of the criteria specified in IEEE-279 of August 30, 1968 and the Atomic Energy Commission (AEC) General Criteria published on July 11, 1967.

All of the protection systems which actuate reactor trip and ESF in the plant are similar to those of Indian Point Unit 2.

7.1.2 Identification of Safety Criteria

7.1.2.1 Design Basis

7.1.2.1.1 Protection System

The basic reactor operating philosophy is to define an allowable region of power, pressure and coolant temperature conditions. This allowable range is defined by the three primary tripping functions:

1. the overpower ΔT trip,
2. the overtemperature ΔT trip, and
3. the nuclear overpower trip.

The operating region below these trip settings is designed so that no combination of power, temperature, and pressure could result in the departure from nucleate boiling ratio (DNBR) becoming less than the DNBR limit for any credible operational transient with all reactor coolant pumps operating. The overpower ΔT limits the maximum core power independent of DNBR. Additional tripping functions are provided to back up the primary tripping functions for specific abnormal conditions.

If the RPS receives signals that are indicative of an approach to unsafe operating conditions, the system actuates alarms, prevents control rod withdrawal, initiates load cutback, and/or opens the reactor trip breakers.

Rod stops from nuclear overpower, overpower ΔT, and overtemperature ΔT deviation are provided to prevent abnormal power conditions which could result from excessive control rod withdrawal initiated by a malfunction of the Reactor Control System or by operator violation of administrative procedures.

While three-loop operation is not permitted by the current Technical Specifications, the plant was designed for three-loop operation. If three-loop operation were permitted, the overtemperature ΔT reactor trip setpoint would have to be reset to a more restrictive (lower) value to maintain operating parameters within the acceptable region defined above. This setpoint change would be required for one protective channel for each of the operating loops. The permissive P-8 trip setpoint must also be reset. Prior to reducing the overtemperature ΔT setpoint, power would be reduced below the P-8 setpoint. After the loop is isolated, P-8 would be reset and power increased.

An interlock system is provided to prevent accidental startup of an unborated and/or cold isolated loop. Figures 7.1-1 through 7.1-5, show the wiring diagrams for the hot- and the cold-leg stop valves and the bypass valves. These figures and the drawings identified in Section 7.2.1.1.4.1 describe the interlock system. This system meets the requirements identified in IEEE-279.

7.1.2.1.1.1 Protection Systems Reliability

Protection and operational reliability is achieved by providing redundant instrumentation channels for each protective function. These redundant channels are electrically isolated and physically separated. The channel design incorporates separate sensors, separate power supplies, separate rack and panel mounted equipment, and separate relays for the actuation of the protective function. For protective functions where two out of three or two out of four redundant-coincident actuation is provided, a single channel failure will not impair the protective function nor cause an unnecessary unit trip.

Protection channels required for full power operation are designed with sufficient redundancy so that an individual channel may be calibrated and/or tested during power operation without degrading reactor protection. Testing of one channel is accomplished by placing that channel's trip outputs in either the channel trip mode or in the bypass mode. In the channel trip mode, a trip logic that is normally two-out-of-four, for example, becomes one-out-of-three. Testing will not cause a trip unless a trip condition exists in a concurrent channel. In bypass mode, a trip logic that is normally two-out-of-four, for example, becomes two-out-of-three. In this case, testing will not cause a trip unless a trip condition exists in two concurrent channels. The testing in bypass mode will only be used as permitted by the Technical Specifications.

7.1.2.1.1.2 Protection System Redundancy and Independence

The RPS is designed so that loss of voltage, the most probable mode of failure, in each channel results in a signal calling for a trip. The RPS

design combines redundant sensors and channel independence with coincident trip philosophy so that a safe and reliable system is provided in which a single failure will not violate reactor protection criteria.

Westinghouse design philosophy for Reactor Protection and Control Systems is to maximize the use of a wide range of measurements. The protection and control systems are separate and identifiable. The design approach permits not only redundancy of control, providing its own desirable increment to overall plant safety, but also provides a protection system that continuously monitors numerous system variables by different means; i.e., protection system diversity.

The extent of protection system diversity has been evaluated for a wide variety of postulated accidents (see Reference 1). Generally, two or more diverse protective functions would terminate an accident before intolerable consequences could occur.

Although the RPS is independent of the control system, the control system is dependent upon signals derived from the protection system through qualified protection isolation devices. No credible fault at the output of an isolation device can prevent the associated protection system channel from meeting the minimum performance requirements specified in the design bases. Fault testing of the isolation devices is described in Reference 6.

The same type of electrical isolation is also used to separate those signals which are required and used to control actual plant variables from the protection system. For this use, however, consideration must be given to possible protection channel failures that can both prevent a particular trip signal from that channel and cause the control system to drive the plant toward the unsafe condition for which the particular trip signal is needed. In each case where this is possible, either four protection channels have been provided and 2 out of 4 logic is used to ensure the plant remains fully protected even when degraded by a second random failure, or a diverse means for providing a reactor trip is available. This design approach makes the most efficient use, for both control and protection purposes, of plant variable measurements.

In the RPS, two reactor trip breakers are actuated by two separate logic matrices which interrupt power to the rod cluster control assembly (RCCA) drive mechanisms. The breakers' main contacts are connected in series with the power supply so that opening either breaker interrupts power to all RCCA drive mechanisms permitting the RCCAs to free fall into the core.

Further details on redundancy are provided through the description of the respective systems covered by the various subsections in this chapter. Required continuous power supply for the protection system is discussed in Chapter 8.

7.1.2.1.1.3 Protection Against Multiple Disability for Protection System

The components of the protection system are designed and arranged so that an adverse environment accompanying an emergency situation in which the components are required to function does not interfere with that function.

Separation of redundant protection channels originates at the process sensors and continues through the wiring route and containment penetrations to the process protection racks. Physical separation is used to the maximum extent practical to achieve separation of redundant transmitters. Separation of wiring routes is achieved using separate wireways, cable trays, conduit runs, and containment penetrations for each redundant channel. Channels which provide signals for the same protective functions are each located in different rack sets ensuring that they will be physically and independently separated. Since all equipment within any rack is associated with a single protection channel set (PCS), there is no requirement for separation of wiring and components within the rack. Additionally, each redundant protection channel set is energized from a separate instrument bus.

7.1.2.1.1.4 Protection System Failure Analysis Design

Each reactor trip channel is designed on the "de-energize to operate" principle, i.e., a loss of power causes that channel to go into its trip mode. All safety related air-operated valves are spring loaded to move to the "fail-safe" position on loss of instrument air.

A reactor trip is implemented by simultaneously interrupting power to the magnetic latch mechanisms on all RCCA drives allowing the RCCAs to insert by free fall. The entire RPS is thus inherently safe in the event of a loss of power. Protection equipment in the Containment is selected to withstand the most adverse environmental conditions to which it will be subjected, including postaccident conditions if the equipment is required to operate in the postaccident condition.

7.1.2.1.1.5 Redundancy of Reactivity Control

One of the two reactivity control systems employs RCCAs to regulate the position of neutron absorbers within the reactor core. The other reactivity control system employs the Chemical and Volume Control System to regulate the concentration of boric acid solution neutron absorber in the Reactor Coolant System (RCS). These systems are described in Chapters 4 and 9, respectively.

7.1.2.1.1.6 Reactivity Control Systems Malfunction

Reactor shutdown with RCCAs is completely independent of the normal control functions since the reactor trip breakers interrupt the power to the RCCA drive mechanisms regardless of existing control signals. Effects of continuous withdrawal of an RCCA and of deboration are described in Chapter 15.

7.1.2.1.1.7 Electrical Isolation

The design criterion used to assure electrical isolation is that channels that provide signals for the same protective function in the RPS or ESF actuation system shall be independent and physically separated from other protection sets providing the protection signal for the protection function.

Where a protection signal's information is required for other than a protective function, an isolation device (part of the protection set) is used to transmit the information. The isolation device prevents the perturbation of the protection channel signal (input) due to any disturbance of the isolated signal (output) which could occur near any termination of the output wiring external to the protection racks. A description of the nuclear instrumentation isolation devices that are used in this plant is given in Reference 2. A description of the process protection system isolating device is provided in Reference 6.

Isolation of the RPS and ESF signals in the reactor protection logic racks is achieved by physical separation. The separation is maintained by using separate wireways for redundant safety signals, annunciator signals, and computer signals.

7.1.2.1.1.8 Protection System Identification

The orderly arrangement of equipment for the RPS and ESF Actuation System helps facilitate testing and maintenance. Large identification plates with the appropriate background color are attached to the front and back surfaces of each rack. A color code for these plates of red, yellow, blue, and black is used for protection channels in sets I, II, III, and IV, respectively. The protection logic cabinets, housing the Train A logic, master relays, and slave relays, are physically separated from cabinets housing Train B equipment. Large identification plates on the input side of the racks identify where protection signals from the various protection channels are received.

Small electrical components, such as relays, have name plates on the enclosure which houses them. All cables are numbered with identification tags. These numbers are cross-referenced with cable schedules that specify cable routing and function.

For rack mounted equipment, a color coding scheme is used to differentiate between protection and nonprotection sets of channels. This provides immediate and unambiguous identification of channel sets throughout the racks.

Each wire termination is identified.

The identification scheme complies with the requirements of Section 4.22 of IEEE-279, Revision 1.

7.1.2.1.1.9 Manual Actuation

Means are provided for manual initiation of protection system action. Failure in the automatic system does not prevent the manual actuation of protection functions. Manual actuation is designed to require the operation of a minimum of equipment.

7.1.2.1.1.10 Demonstration of Protection System Functional Operability

7.1.2.1.1.10.1 Channel Bypass or Removal from Operation

7.1.2.1.1.10.1.1 Reactor Protection System

The Eagle 21 Process Protection System is designed to permit an inoperable channel to be placed in a bypass condition for the purpose of troubleshooting or periodic test of a redundant channel. Use of the bypass

mode disables the individual channel bistable trip circuitry which forces the associated logic input relays to remain in the non-tripped stated until the "bypass" is removed. If the process protection channel has been bypassed for any purpose, a signal is provided to allow this condition to be continuously indicated in the Control Room. In addition, the Eagle 21 design has provided for administrative controls and multiple levels of security for bypassing a protection channel. During such operation, the process protection system continues to satisfy the single failure criterion. This is acceptable since there are 4 channels and the two-out-of-four trip logic reduces to two-out-of-three during the test. For functions that use two-out-of-three logic, it is implicitly accepted that the single failure criterion is met because of the results of the system reliability study. From the results of this, it was concluded that the Eagle 21 digital system availability is equivalent to the equivalent analog process protection system availability even without the incorporation of the redundancy, automatic surveillance testing, self calibration and self diagnostic features of the Eagle 21 Process Protection System. The placing of a channel in bypass will only be permitted as defined in the Technical Specifications.

7.1.2.1.1.10.1.2 Nuclear Instrumentation System and Relay Protection Logic

These systems are designed to permit any one analog channel to be maintained, tested or calibrated during power operation without system trip. (Note: This does not include such backup trips as Reactor Coolant Pump Breaker Position.) During such operation, the active parts of the system continue to meet the single failure criterion, since the channel under test is either tripped or makes use of superimposed test signals which do not negate the process signal.

A listing of the operating bypasses are included in Table 7.1-1. Except for the following, these bypasses meet the intent of the requirements of Paragraph 4.12 of IEEE-279:

1. "One out of two" systems are permitted to violate the single failure criterion during channel bypass provided that acceptable reliability of operation can be otherwise demonstrated and bypass time interval is short; and

2. Containment spray actuation channels are tested by bypassing or negating the channel under test. This is acceptable since there are 4 channels, and the two out of four trip logic reduces to two out of three during the test.

The bypasses are automatically removed whenever the permissive conditions listed in the "Derivation" column of Table 7.1-1 are not met. These bypasses are considered to be part of the protection system and are designed in accordance with the intent of the requirements of IEEE-279.

A listing of reactor trip, ESF actuation, containment isolation, and steamline isolation signals is presented in Table 7.1-2.

7.1.2.1.1.10.2 Capability for Test and Calibration

The signal conditioning equipment of each protection channel in service at power is capable of being calibrated and tested independently by simulated input signals to verify its operation without tripping the reactor. The testing scheme includes checking through the trip logic to the trip breakers. The Man Machine Interface (MMI) test rack (Reference 7) is used to check partial trip, analog, and digital outputs that are then fed to trip logic relays, meters or other control circuits, and computer inputs, respectively. The MMI test rack is connected to the process rack by inserting a cable plug into a connector located on the front test panel of the rack. Thus, the operability of each trip channel can be determined conveniently and without ambiguity. Functional operation of the power sources for the protection system is discussed in Chapter 8.

The Process Protection System is designed to permit periodic testing of the process channel portion of the Reactor Protection System during reactor power operation without initiating a protective action unless a trip condition actually exists. Where only pats of the system are tested at any one time, the testing sequence provides the necessary overlap between the parts to assure complete system operation.

Operability of the process sensors is confirmed by cross checking between identical channels or between channels which bear a known relationship to each other and which have outputs to indicating devices available. Sensors can be calibrated during plant shutdown.

The Process Protection System performs automatic surveillance testing of the digital process protection racks via a Man Machine Interface (MMI). The MMI is connected to a process rack by inserting a cable plug into a connector located on the front test panel of the rack. Using the MMI, the "Surveillance Test" option is then selected. Following the instructions entered through the MMI, the rack test processor automatically performs the following operations:

1. Selection of the individual process channel to be tested.

2. Calibration of the test reference signals and verification of the tester time base.

3. Administrative control of the placement of the individual channel trip outputs in either channel trip or bypass (password protected) mode as permitted by the Technical Specifications.

   a. Bypass Mode: Diables the individual channel bistable trip circuitry which forces the associated logic input relays to remain in the non-tripped state until the bypass is removed.

   b. Channel Trip Mode: Interrupts the individual channel comparator outputs to the logic circuitry to de-energize the associated logic input relay(s).

4. Activation of the test injection signal.

5. Performance of the Analog to Digital (A/D) converter test and engineering unit values conversion test.

6. Performance of bistable setpoint tests.

7. Performance of the channel time response test. (The UFSAR safety analyses utilize conservative numbers for trip channel response time. The measured channel response times are compared with those used in the safety evaluations in Chapter 15.)

8. Completion of the test cycle and automatic removal of channel trips.

9. Verification of calibration of the test injection signals.

10. Display of test results on the MMI screen.

Interruption of the comparator output to the logic circuitry for any reason (test, maintenance purposes, or removed from service) causes that portion of the logic to be actuated and accompanied by a channel trip alarm and channel status light in the control room. Status lights on the process rack test panel indicate when the associated comparator has tripped. Each channel is fully testable via the MMI.

7.1.2.1.1.11 Information Readout and Indication of Bypass

The protection system provides the operator with complete information pertinent to system status and safety. Indication is provided in the Control Room if some part of the system has been administratively bypassed or taken out of service. Trips are indicated and identified down to the channel level.

All transmitted signals (flow, pressure, temperature, etc.) which can lead to a reactor trip are either indicated and/or recorded for every channel.

All nuclear flux power range currents, top detector, bottom detector, algebraic difference between bottom and top detector, and average of bottom and top detector currents, are indicated and/or recorded.

The information and readouts available to the operator for monitoring the conditions of the primary plant are shown on the RCS and associated systems flow diagrams in appropriate chapters of the UFSAR and Section 7.5. The design criteria for selecting these readouts and indications is based on providing the plant operators with information on critical plant parameters under normal and abnormal plant operating conditions and under accident conditions.

As identified in Table 7.1-3, the Control Room has continuous indication of containment pressure, temperature, and relative humidity.

The monitoring of Containment pressure is consistent with the ESF criteria of four independent channels of redundancy. Class 1E isolation devices are employed in each channel such that a loss of an indicator will not jeopardize the operation of the ESF function. All containment pressure

system components which perform ESF functions are in accordance with Seismic Class I and quality assurance requirements.

The monitoring of containment temperature and relative humidity at three points provides an adequate scan of the Containment. The sensors are located approximately 120° apart and at points which give a representative reading for the entire 120° section. Wide range instrumentation is also provided for containment temperature and pressure.

Table 7.1-4 provides information about monitors for miscellaneous containment parameters in the Reactor Ventilation System, Reactor Support Cooling System, and the reactor support concrete. Individual temperature monitors for the Reactor Ventilation System branches listed in Table 7.1-4 provide continuous indication, computer scanning, logging, and alarms for abnormal operating conditions or high Ventilation System temperatures that could damage vital equipment. The containment-to-outside atmosphere differential pressure monitor provides indication of abnormal containment pressures relative to the outside atmosphere and initiates and monitors containment relief system operation.

Temperature sensors in the reactor support concrete monitor the temperature profile (including the peak temperatures) across each reactor support. The reactor support temperature is measured by a test meter that can be connected to each temperature sensor on a periodic basis or as required.

Since the Reactor Support Cooling System is designed for the maximum operating temperature of the reactor and local temperature monitoring is provided for the Reactor Support Cooling System, a loss of reactor support cooling water would alert the operator to scan the reactor support temperature sensors for excessively high temperatures.

7.1.2.1.1.12 Vital Protection Functions and Functional Requirements

The RPS, in conjunction with inherent plant characteristics, is designed to prevent anticipated abnormal conditions from exceeding limits established in Chapters 4 and 5.

7.1.2.1.1.13 Completion of Protective Action (Interlock)

The RPS is designed so that, once initiated, a protective action goes to completion. Return to normal operation requires action by the operator.

Where operating requirements necessitate automatic or manual bypass of a protective function, the design is such that the bypass is removed automatically whenever permissive conditions are not met. Devices used to achieve automatic removal of the bypass of a protective function are part of the RPS and are designed in accordance with the criteria of this section.

7.1.2.1.1.14 Multiple Trip Settings

Multiple trip settings are used to limit plant operating variables. When a more restrictive trip setting becomes necessary to provide adequate protection for a particular mode of operation or set of operating conditions, the protection system, as designed, provides positive assurance that the more restrictive trip setting is used. The devices used to prevent improper use of less restrictive trip settings are considered a part of the protection system and are designed in accordance with the criteria presented in this section.

7.1.2.1.1.15 Protection Actions

The RPS automatically trips the reactor as stated in Section 7.1.2.1.1.2. Trip limits for these conditions have been established.

The RPS prevents control rod withdrawal when a specified parameter reaches a value less than the value at which reactor trip is initiated.

For anticipated abnormal conditions, inherent plant characteristics, the RPS, and the ESF Actuation System are designed to ensure that limits for energy release to the Containment and radiation exposure to the public, as in 10CFR100, are not exceeded.

7.1.2.1.1.16 Alarms and Annunciators

Alarms and annunciators are also used to alert the operator of deviations from normal operating conditions so that corrective action may be taken to avoid a reactor trip. Actuation of any abnormal rod stop or trip of any reactor trip channel will also actuate an alarm.

An alarm and annunciator is actuated if more than one reactor process protection set is violated. The protection set is considered violated when one cabinet door is opened. To prevent interaction with the protection rack, a series of interlocks (i.e., key switch and password protection) have been provided with the Process Protection System. These interlocks are administratively controlled and may be accessed only with operator permission.

7.1.2.1.1.17 Operating Environment

The protection channels are designed to perform their functions when subjected to adverse environmental conditions. See Section 7.3.2 for those portions of the protection system that must operate in a postaccident environment.

7.1.2.1.1.18 Seismic Performance

A description of seismic design considerations can be found in Section 3.10 and in References 8, 9, 10, and 11.

7.1.2.1.2 Engineered Safety Feature Instrumentation

The ESF instrumentation measures temperatures, pressures, flows, and levels in the RCS, steam system, Reactor Containment and auxiliary systems. It actuates the ESF and monitors their operation. Process variables are indicated, recorded, and controlled from the Control Room on a continuous basis for the startup, operation, and shutdown of the unit. The quantity and types of process instrumentation provided ensure safe and orderly operation of all systems and processes over the full operating range of the plant.

7.1.2.1.2.1 Engineered Safety Feature Instrumentation Redundancy and Independence

The ESF Systems are actuated by redundant logic and coincidence networks similar to those used for reactor protection. Each network actuates a device that operates the associated ESF equipment, motor starters, and valve operators. The channels are designed to combine redundant sensors, independent channel circuitry, and coincident trip logic. Where possible, different but related parameter measurements are utilized. This ensures a safe and reliable system in which a single failure will not defeat the intended function. The action-initiating sensors, comparators and logic are shown in the figures included in the detailed ESF actuation description given in Section 7.3.1. The ESF Actuation System initiates (depending on the severity of the condition) the SI System, containment isolation, Containment Spray (CS) System and the diesel generators.

7.1.2.1.2.2 Failure Analysis Design

Availability of control power to the ESF trip channels is continuously monitored. In general, the loss of instrument power to the sensors, instruments, or logic devices in the ESF instrumentation places that channel in the trip mode. The one exception is the CS initiating channels which require instrument power for actuation.

The passive accumulators of the ECCS do not require signal or power sources to perform their functions. The actuation of the active portion of the ECCS is from signals described in Table 7.1-2.

7.1.2.1.2.3 Containment Spray Actuation

CS operation is automatically initiated by containment high-high pressure coincident with an SI signal. The containment pressure is sensed by four independent pressure detectors, which are combined in a two out of four

logic network. The output signal provides two independent channels for CS actuation via the two logic trains. Each containment spray actuation signal (CSAS) channel initiates operation of three CS pumps with their associated valving. See Reference 4 for the original functional diagram of CSAS logic.

In the event of a CSAS, the motor-driven CS pumps would be operated from their normal source of power. If this is not available, or subsequently becomes unavailable, the supply buses would automatically be switched to the diesel generators. In the event of a CSAS, the diesel-driven CS pump will start from either of its two battery banks.

Each spray system isolation valve is opened by a CSAS. Containment isolation backup is provided by check valves in the spray system piping. Motor-operated valve safety arrangements are discussed in detail in Chapter 6.

The spray pump motor starting circuits and spray valve control circuits are provided with manual control switches in the Control Room. Each pump and isolation valve has test features to permit periodic operability testing of components and circuitry without causing interruption of the spray initiating system or inadvertent spray into the Containment Building.

7.1.2.1.2.4 Containment Isolation Signal

The signals which initiate containment isolation are given in Table 7.1-2. There are four independent containment pressure detectors. A high containment pressure signal generated by two out of four containment pressure detectors, or any other SI signal, will initiate a Phase A containment isolation. All containment penetrations including those open to the atmosphere, receive a Phase A isolation signal except those required for operation of the ESF. If the high-high containment pressure setpoint is reached, a Phase B containment isolation and steamline isolation are initiated. A high-high pressure signal coincident with an SI signal will initiate CS. See Reference 3 for the original functional diagram of containment isolation initiation logic.

A table of isolation valves and the isolation signals they receive is given in Section 6.2. Air-operated isolation valves will automatically go to their ESF position on loss of control air.

Isolation valves will be tested at least once per 18 months while the unit is offline by applying containment isolation test signals. The power supply to the containment isolation system is the ESF electrical supply described in Chapter 8.

Manual actuation of each channel of containment isolation may be accomplished from the Control Room or local switches. Individual valve

control switches are located in the Control Room for isolation valve testing. The switches have a spring return to automatic position.

Each valve has test features to permit periodic testing of components and circuitry without causing interruption of the containment isolation initiating signal.

The containment isolation signals provide the means of isolating the various pipes passing through the containment walls. This is required to prevent the release of radioactivity to the outside environment in the event of an accident.

7.1.3 References, Section 7.1

1. WCAP-7306, "Reactor Protection System Diversity in W PWRs," T.W.T. Burnett, April 1969.

2. WCAP-7819, "Nuclear Instrumentation System, Isolation Amplifier," J. B. Lipchak. R.R. Bartholomew, December 1971.

3. Deleted

4. Westinghouse Propriety Class 2, Functional Diagrams Drawing No. 5653030 Sub 3; Sheet 8.

5. WCAP-12358 "Westinghouse Protection Systems Noise Tests", Rev. 2, October, 1975.

6. WCAP-11733 "Noise, Fault, Surge, and RFI Test Report For Westinghouse EAGLE 21 Process Protection Upgrade System", J.P. Doyle, June, 1988.

7. WCAP-12374 "Topical Report EAGLE 21 Microprocessor Based Process Protection System", L.E. Erin, September, 1989.

8. WCAP-8587 "Methodology for Qualifying Westinghouse WRD Supplied NSSS Safety Related Electrical Equipment".

9. WCAP-8687, Supplement 1, EQDP-ESE-69 "Equipment Qualification Data Package".

10. WCAP-8687, Supplement 2-E69A "Equipment Qualification Test Report".

11. WCAP-8687, Supplement 2-E69B "Equipment Qualification Test Report".

TABLE 7.1-1 (1 of 4)

INTERLOCK CIRCUITS

DESIG-NATION	DERIVATION	FUNCTION
P-4	Reactor trip	Actuates turbine trip
		Closes main feedwater valves on T_{avg} below setpoint
		Prevents opening of main feedwater valves which were closed by safety injection or high steam generator water level
P-6	1/2 Neutron flux (intermediate range) above setpoint	Allows manual block of source range reactor trip
	2/2 Neutron flux (intermediate range) below setpoint	Defeats the block of source range reactor trip
P-7	3/4 Neutron flux (power range) below setpoint (from P-10) and 2/2 Turbine impulse chamber pressure below setpoint (from P-13)	Blocks reactor trip on: Low flow or reactor coolant pump breakers open in more than one loop, undervoltage, under-frequency, turbine trip, pressurizer low pressure, and pressurizer high level
P-8	3/4 Neutron flux (power range) below setpoint	Blocks reactor trip on low flow or reactor coolant pump breaker open in a single loop
P-10	2/4 Neutron flux (power range) above setpoint	Allows manual block of power range (low setpoint) reactor trip
		Allows manual block of intermediate range reactor trip and intermediate range rod stops (C-1)

TABLE 7.1-1 (2 of 4)

INTERLOCK CIRCUITS

DESIG-NATION	DERIVATION	FUNCTION
P-10 (cont)		
		Blocks source range reactor trip (backup for P-6)
	3/4 Neutron flux (power range) below setpoint	Defeats the block of power range (low setpoint) reactor trip
		Defeats the block of intermediate range reactor trip and intermediate range rod stops (C-1)
		Input to P-7
P-11	2/3 Pressurizer pressure below setpoint	Allows manual block of safety injection actuation on low pressurizer pressure signal coincident with low pressurizer level signal
	2/3 Pressurizer pressure above setpoint	Defeats manual block of safety injection actuation
P-12	2/4 T_{avg} below setpoint	Actuates safety injection and steamline isolation on high steamline flow; Allows manual block of safety injection actuation on high steam line flow
		Blocks steam dump
		Allows manual bypass of steam dump block for the cooldown valves only
		Defeats the manual block of safety injection actuation on high steam line flow
		Defeats the manual bypass of steam dump block

TABLE 7.1-1 (3 of 4)

INTERLOCK CIRCUITS

DESIG-NATION	DERIVATION	FUNCTION
P-13	2/2 Turbine impulse chamber pressure below setpoint	Input to P-7
C-1	1/2 Neutron flux (intermediate range) above setpoint	Blocks automatic and manual control rod withdrawal
C-2	1/4 Neutron flux (power range) above setpoint	Blocks automatic and manual control rod withdrawal
C-3	2/4 Overtemperature ΔT above setpoint	Blocks automatic and manual control rod withdrawal
		Actuates turbine runback via load reference
C-4	2/4 Overpower ΔT above setpoint	Blocks automatic and manual control rod withdrawal
		Starts turbine runback via load reference
C-5	1/1 Turbine impulse chamber pressure below setpoint	Blocks automatic control rod withdrawal
C-6	1/2 Turbine impulse chamber pressure below setpoint	Blocks turbine runback via load limit
C-7	1/1 Time derivative (absolute value) of turbine impulse chamber pressure (decrease only) above setpoint	Makes steam dump valves available for either tripping or modulation
C-8	2/3 Turbine auto stop oil pressure below setpoint or 1/4 stop valves closed	Blocks steam dump control via load rejection T_{avg} controller
	2/3 Turbine auto stop oil pressure above setpoint or 4/4 stop valves open	Blocks steam dump control via turbine trip T_{avg} controller

TABLE 7.1-1 (4 of 4)

INTERLOCK CIRCUITS

DESIG-NATION	DERIVATION	FUNCTION
C-9	Any Condenser pressure above setpoint or All circulation water pump breakers open	Blocks steam dump to condenser
C-10	Rod bottom signal (any rod)	Blocks automatic control rod withdrawal* Starts turbine runback via load limit*

NOTE: "P" stands for a protection grade interlock
"C" stands for a control grade interlock

* These functions are not operable at Zion

TABLE 7.1-2 (1 of 7)

LIST OF REACTOR TRIPS AND ACTUATION MEANS OF: ENGINEERED SAFETY FEATURES, CONTAINMENT AND STEAMLINE ISOLATION

Reactor Trip	Coincidence Circuitry and Interlocks	Comments
1. Manual	1/2, no interlocks	
2. Power range neutron flux		
A. High neutron flux	2/4, low setpoint interlocked with P-10	High and low settings; manual block and automatic reset of low setting by P-10
B. High neutron flux rate	2/4, no interlocks	
C. Negative neutron flux rate	2/4, no interlocks	
3. Overtemperature ΔT	2/4, no interlocks	
4. Overpower ΔT	2/4, no interlocks	
5. Low pressurizer pressure	2/4, interlocked with P-7	
6. High pressurizer pressure	2/4, no interlocks	
7. High pressurizer water level	2/3, interlocked with P-7	
8. Low reactor coolant flow	2/3 signals per loop, interlocked with P-7 and P-8	Blocked below P-7. Low flow in 1 loop permitted below P-8.
9. Monitored electrical supply to reactor coolant pumps:		
A. Undervoltage	2/4, interlocked with P-7	
B. Underfrequency	2/4, interlocked with P-7 and P-8	2/4 underfrequency signals will trip all reactor coolant pumps and indirectly actuate reactor trip: interlock with P-7 and P-8.

TABLE 7.1-2 (2 of 7)

LIST OF REACTOR TRIPS AND ACTUATION MEANS OF: ENGINEERED SAFETY FEATURES, CONTAINMENT AND STEAMLINE ISOLATION

Reactor Trip	Coincidence Circuitry and Interlocks	Comments
9. (cont.) C. Reactor coolant pump breakers	Interlocked with P-7 and P-8	Blocked below P-7. Open breaker in 1 loop permitted below P-8.
10. Safety injection signal (actuation) (Note 1)	Any one of the following: 1. Low pressurizer pressure (2/3), 2. 2/4 high containment pressure, 3. 2/3 steamline differential pressure signals of one line compared with the other three lines (blocked when both affected loop isolation valves are fully closed), 4. 2/4 high steam flow in coincidence with 2/4 low-low T_{avg} or 2/4 low steamline pressure, or 5. Manual 1/2. See Section 7.2-System Description-Protective Action for Interlocks.	Trip main feedwater pumps. Closes all feedwater control valves. Closes feedwater isolation valves and initiates Phase A isolation.
11. Turbine-generator trip	2/3 low auto stop oil pressure or all stop valves closed, interlocked with P-7	
12. Low feedwater flow	1/2 steam/feedwater flow mismatch in coincidence with 1/2 low steam generator water level, per loop	

TABLE 7.1-2 (3 of 7)

LIST OF REACTOR TRIPS AND ACTUATION MEANS OF: ENGINEERED SAFETY FEATURES, CONTAINMENT AND STEAMLINE ISOLATION

Reactor Trip	Coincidence Circuitry and Interlocks	Comments
13. Low-low steam generator water level	2/3, per loop, blocked when both affected reactor coolant isolation valves are fully closed	
14. Intermediate range neutron flux	1/2, manual block permitted by P-10	Manual block and automatic reset
15. Source range neutron flux	1/2, manual block permitted by P-6 interlocked with P-10	Manual block and automatic reset
Containment Isolation Actuation	**Coincidence Circuitry and Interlocks**	**Comments**
1. Containment pressure (Note 1)	Coincidence of 2/4 containment high pressure or 1/2 manual	Actuates all nonessential process lines containment isolation trip valves-isolation Phase A
	Coincidence of 2/4 containment high-high pressure or 2/2 manual	Actuates all remaining trip valves (except those required for operation of engineered safeguard systems) Phase B
2. High containment activity	Any of the following:	
	1. High activity signal from containment purge exhaust monitors,	Closes containment purge supply and exhaust ducts. Purge valve closure causes purge fans to trip.
	2. High radiation signal from containment monitor RIA-PR40 Channel 1 or Channel 5.	Closes containment purge supply and exhaust ducts. Purge valve closure causes purge fans to trip. Containment pressure and vacuum relief valves close.

TABLE 7.1-2 (4 of 7)

LIST OF REACTOR TRIPS AND ACTUATION MEANS OF: ENGINEERED SAFETY FEATURES, CONTAINMENT AND STEAMLINE ISOLATION

Engineered Safety Features System	Coincidence Circuitry and Interlocks	Comments
	3. A high activity signal from 1 of 2 radiation monitors (RT-AR04A or B) during refueling periods only, or 4. 1/2 manual	Closes containment purge supply and exhaust ducts. Purge valve closure causes purge fans to trip. Containment pressure and vacuum relief valves close.
1. Safety injection signal (S)	See Item 10 of Reactor Trip Listing, Table 7.1-2	
2. Containment spray signal (P)	high-high containment pressure (2/4) coincident with safety injection signal or manual 2/2	
3. NaOH addition	Containment spray actuation signal	
4. Turbine driven pump (Aux feedwater)	Any of the following: 1. Coincidence of 2/3 low-low level in two steam generators, 2. Undervoltage on 2/4 RCP buses, 3. Safety injection signal, 4. Station blackout signal (under-voltage on 2/3 RCP buses that supply ESF buses), 5. Secondary undervoltage (2/2 on ESF bus 149(249) for approximately 5 minutes will cause the turbine-driven auxiliary feedwater pump to start automatically when bus voltage returns to normal),	- 2/3 high level in steam generator trips feedwater pumps - Item 6 is the result of Anticipated Transient Without SCRAM Mitigation System (AMS) actuation

TABLE 7.1-2 (5 of 7)

LIST OF REACTOR TRIPS AND ACTUATION MEANS OF: ENGINEERED SAFETY FEATURES, CONTAINMENT AND STEAMLINE ISOLATION

Engineered Safety Features System	Coincidence Circuitry and Interlocks	Comments
	6. 3/4 narrow range steam generator levels are low (6%) and auctioneered nuclear power is above 40%, or 7. Manual (local or remote).	
5. Motor-driven pumps (Aux feedwater)	Any of the following: 1. 2/3 low-low level in any steam generator, 2. Safety injection signal, 3. Station blackout signal (undervoltage on 2/3 RCP buses that supply ESF buses), 4. Secondary undervoltage (2/2 on ESF bus that powers a motor-driven auxiliary feedwater pump will trip the pump if the undervoltage condition exists for approximately 5 minutes. The affected pump will start automatically after the pump breaker is tripped and bus voltage returns to normal), 5. 3/4 narrow range steam generator levels are low (6%) and auctioneered nuclear power is above 40%, or 6. Manual (local or remote).	- Item 5 is the result of AMS actuation

TABLE 7.1-2 (6 of 7)

LIST OF REACTOR TRIPS AND ACTUATION MEANS OF: ENGINEERED SAFETY FEATURES, CONTAINMENT AND STEAMLINE ISOLATION

Steamline Isolation Actuation	Coincidence Circuitry and Interlocks	Comments
1. Steam flow	High steamline flow in 2/4 lines coincident with either low-low T_{avg} in 2/4 loops or low steam pressure in 2/4 lines	
2. Containment pressure	2/4 high-high containment pressure signal	
3. Manual (per steamline)	1/1 per steamline	
4. Close main feedwater control valves (fast closure)	Actuated by: 1. Safety injection (see Reactor Trip, Item 10) 2. 2/3 high level in any steam generator	
5. Feedwater isolation valves	Actuated by safety injection	Automatic closure, manual actuation to reopen

TABLE 7.1-2 (7 of 7)

LIST OF REACTOR TRIPS AND ACTUATION MEANS OF: ENGINEERED SAFETY FEATURES, CONTAINMENT AND STEAMLINE ISOLATION

NOTE 1: Definition of "S", "T", and "P" signals

Signal:	Initiated by:	Action:
"S"	Safety injection signal	Actuates safety injection
"T"	Safety injection signal	Actuates containment isolation Phase A (all nonessential process lines)
"P"	2/4 high-high containment pressure	Actuates containment spray, steamlines isolation and Phase B containment isolation (remaining process lines)

TABLE 7.1-3

CONTAINMENT ENVIRONMENTAL PARAMETERS
AVAILABLE IN CONTROL ROOM

Parameter	Range	Number of Channels	Accuracy
Temperature	0 to 150°F	2	± 1.5% span
	0 to 300°F	1	± 1.5% span
Pressure	0 to 75 psia	4	± 1.5% span
	-5 to 200 psia	2	± 1.5% span
Relative Humidity	20 to 100 RH	3	± 3% span between 32 to 100°F ± 6% span between 0 to 32°F

TABLE 7.1-4 (1 of 2)

MONITORS FOR MISCELLANEOUS CONTAINMENT PARAMETERS

Service	Parameter	Number of Channels	Range	Type of Readout	Accuracy	Location
Control Rod Drive Shroud Air Inlet	Temperature	1	0 to 200°F	Computer	±4% Span	Main Control Room
Control Rod Drive Shroud Air Outlet	Temperature	1	0 to 200°F	Computer	±4% Span	Main Control Room
Reactor Cavity Air Inlet	Temperature	1	0 to 200°F	Indicator Computer	±4% Span	Local Main Control Room
Reactor Cavity Air Outlet	Temperature	4	0 to 200°F	Computer	±4% Span	Main Control Room
Excore Neutron Monitors Air Outlet	Temperature	8	0 to 200°F	Computer	±4% Span	Main Control Room
Containment Fan Cooler Return Air	Temperature	5	0 to 200°F	Computer	±4% Span	Main Control Room
Control Rod Drive Booster Fan Disch	Temperature	4	0 to 200°F	Computer	±4% Span	Main Control Room
Differential Between Containment and External Atmosphere	Differential Pressure	1	-5 to +15" W.C.	Indicator	±1.5% Span	Main Control Room and Local
Reactor Support Concrete	Temperature	16	0 to 260°F	Test Indicator	±4% Span	Local

TABLE 7.1-4 (2 of 2)

MONITORS FOR MISCELLANEOUS CONTAINMENT PARAMETERS

Service	Parameter	Number of Channels	Range	Type of Readout	Accuracy	Location
Reactor Support Coolant	Flow	2	0 to 20 GPM	Indicator/	±5% Span	Local Indicator
				Low Flow Alarm		Control Room Alarm
Reactor Support Coolant	Temperature	16	0 to 200°F	Indicator	±1% Span	Local
Containment Radiation*	Radiation	2	.1mr to 10R/hr	Indicator/ Recorder/ Alarm	±20% of reading	Main Control Room
Containment Level	Level	2	0 to 10′	Indicator	±2% Span	Main Control Room
Containment Sump Level	Level	2	0 to 40"	Indicator	±2% Span	Main Control Room

*See Table 11.3.1

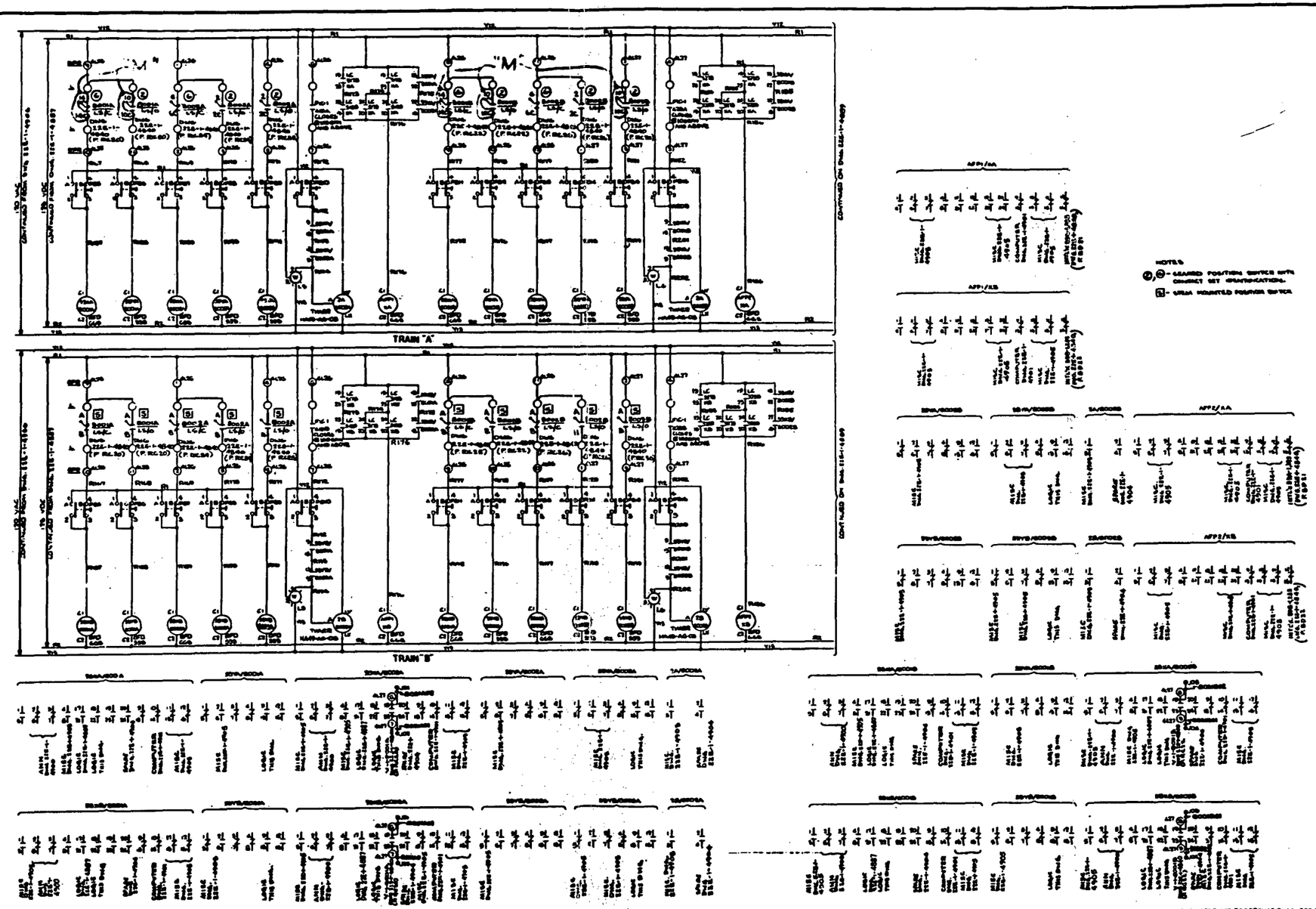

ZION STATION UFSAR

22E-1-4888 Rev. M 6/23/93

Figure 7.1-1

SCHEMATIC DIAGRAM REACTOR PROTECTION - RC STOP VALVES PT.1

JULY 1995

OT

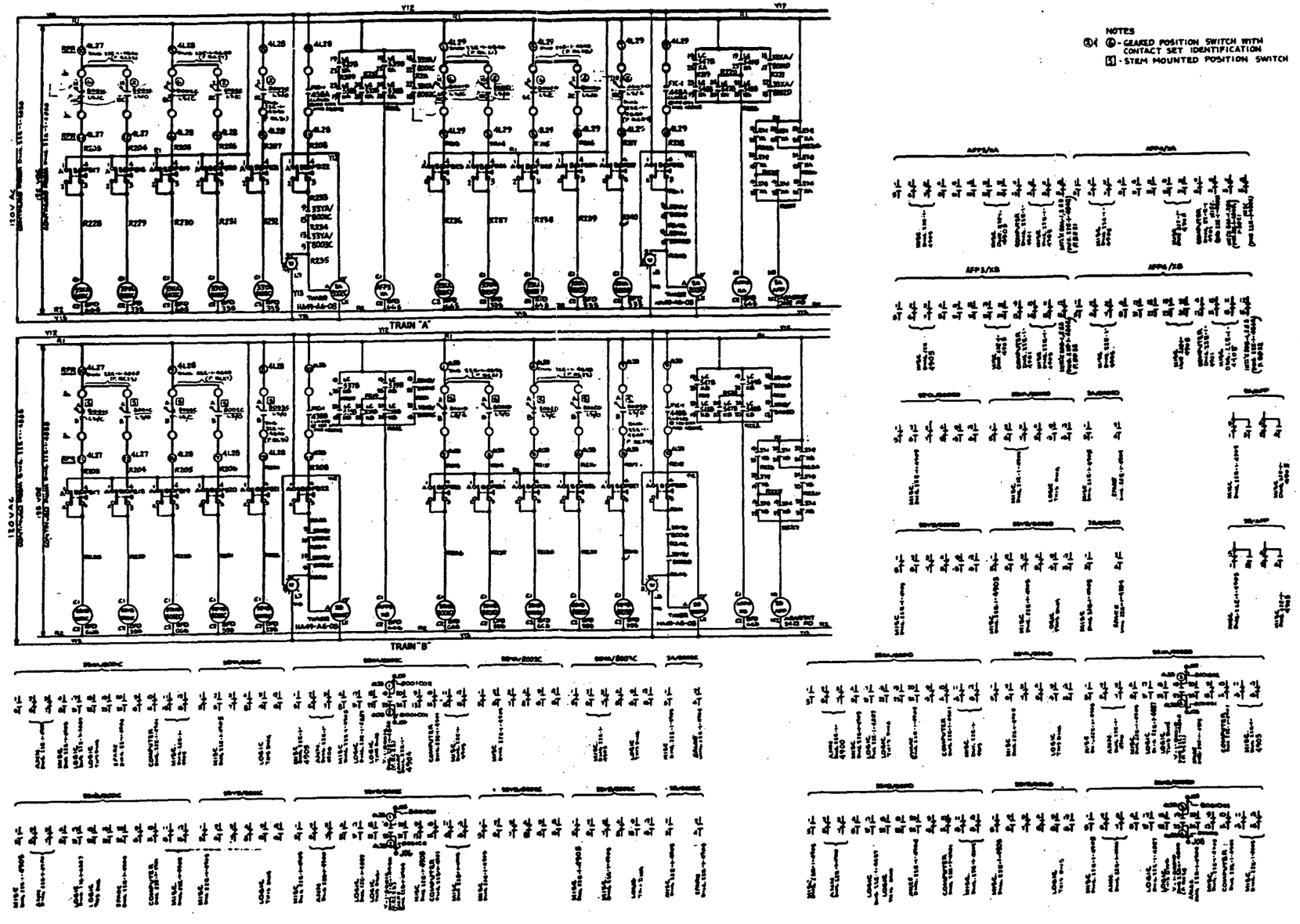

THIS DRAWING HAS BEEN PHOTOGRAPHICALLY RESTORED BY REPRODUCTION CONSULTANTS, LTD.
DATE 12/29/87

ZION STATION UFSAR

22E-1-4889 Rev. L 6/23/93

Figure 7.1-2

SCHEMATIC DIAGRAM REACTOR PROTECTION - RC STOP VALVES PT.2

JULY 1995

22E-1-4889

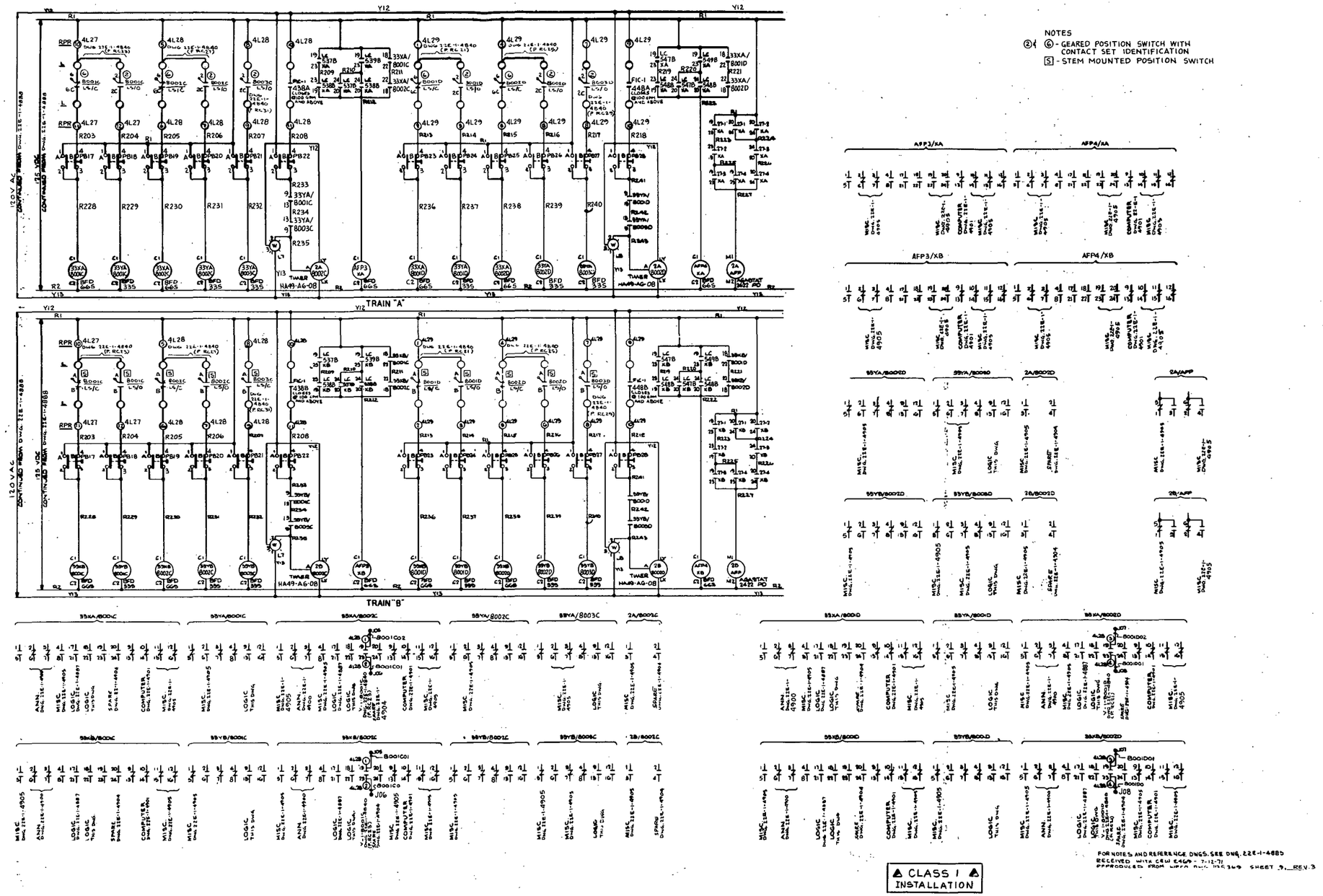

FOR NOTES AND REFERENCE DWGS. SEE DWG. 22E-1-4889
RECEIVED WITH CEW 6469 - 7-12-71
REPRODUCED FROM WPPA DWG 1369 SHEET 9, REV. 3

ZION STATION UFSAR
22E-1-4889 Rev. J 2/11/88

Figure 7.1-2
SCHEMATIC DIAGRAM REACTOR PROTECTION - RC STOP VALVES PT. 2

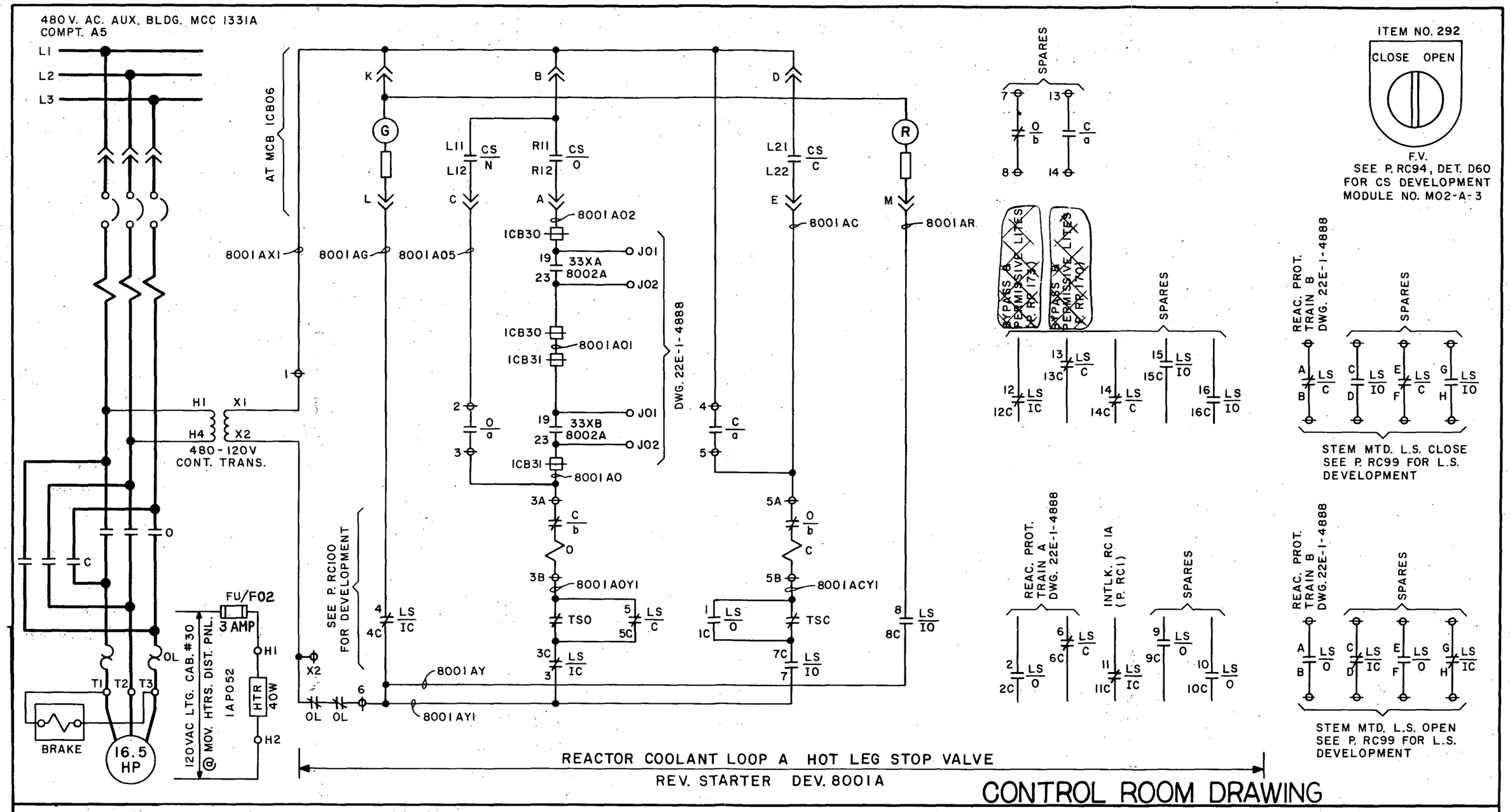

ZION STATION UFSAR
22E-1-4840 RC 20 Rev. M 9/11/91

Figure 7.1-3

REACTOR COOLANT LOOP A HOT LEG STOP VALVE SCHEMATIC DIAGRAM

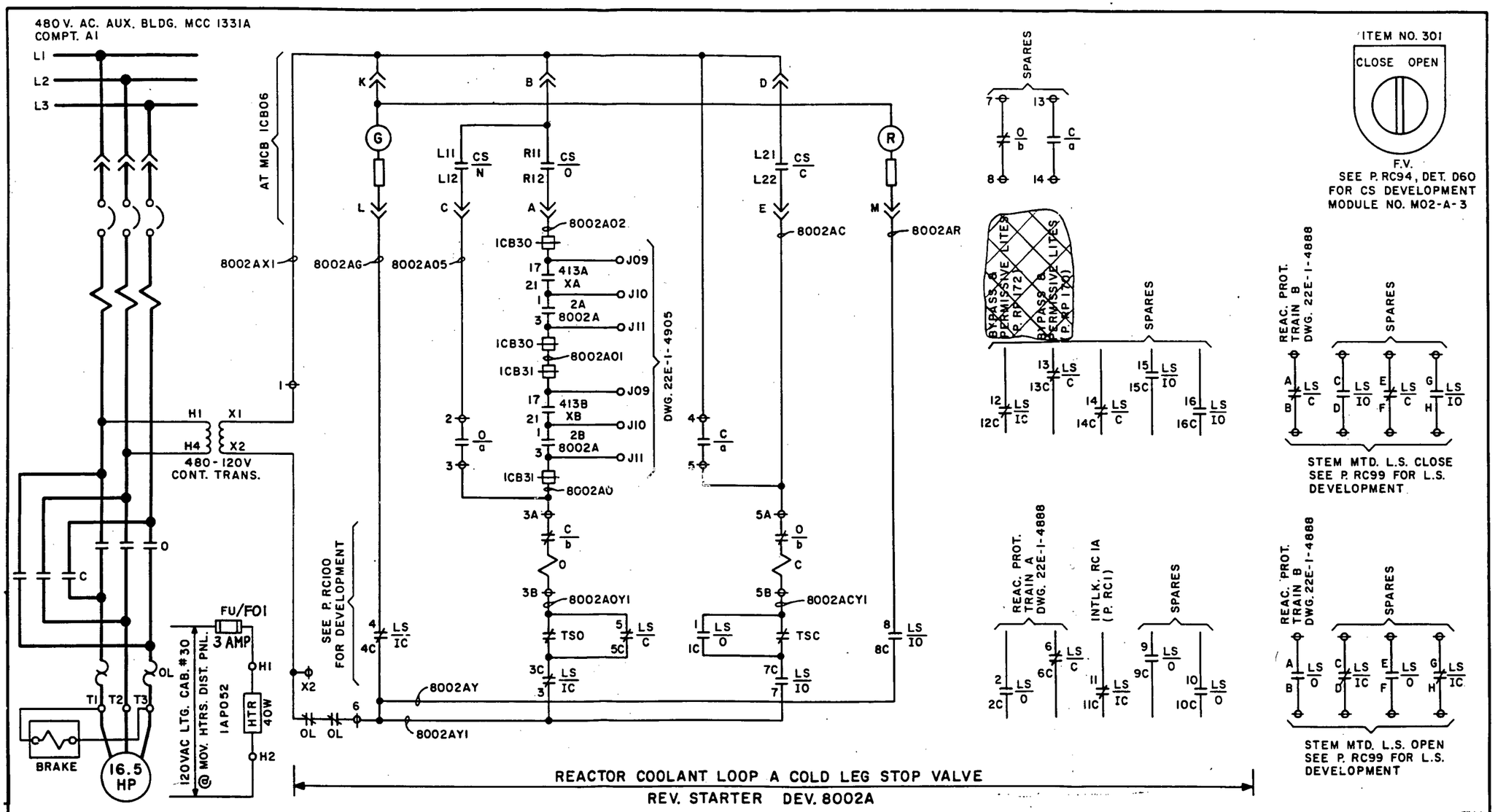

ZION STATION UFSAR
22E-1-4840 RC 24 Rev. N 8/20/92

Figure 7.1-4
REACTOR COOLANT LOOP A COLD LEG STOP VALVE SCHEMATIC DIAGRAM

JULY 1993

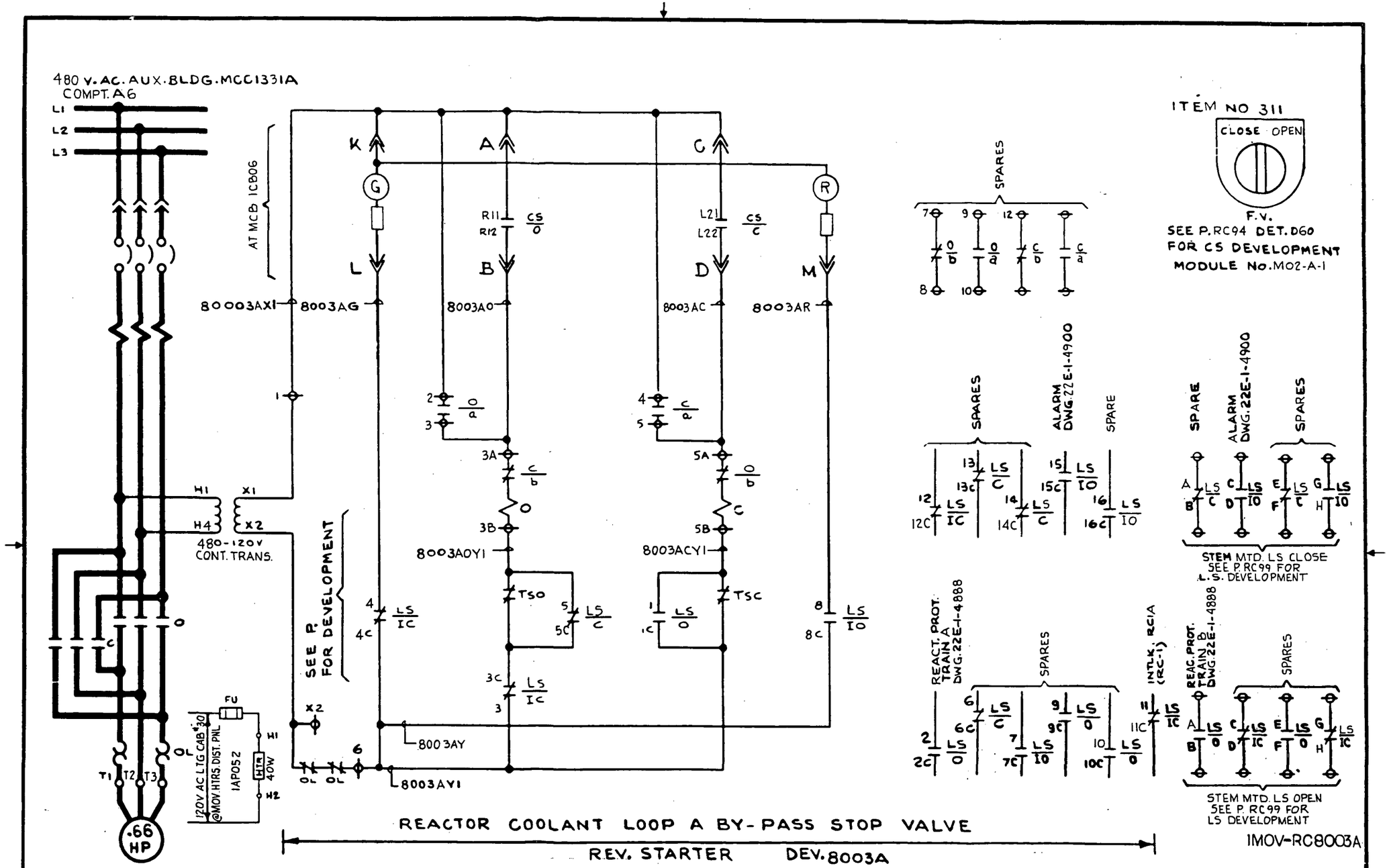

ZION STATION UFSAR
22E-1-4840 RC 28 Rev. G 8/20/92

Figure 7.1-5
REACTOR COOLANT LOOP A
BYPASS STOP VALVE SCHEMATIC
DIAGRAM

JULY 1993

7.2 REACTOR PROTECTION SYSTEM

7.2.1 Description

The Reactor Protection System (RPS) receives signals that are indicative of an approach to unsafe operating conditions and will actuate alarms, prevent control rod withdrawals, initiate load cutbacks, and/or open the reactor trip breakers.

Figure 15.0-1 illustrates core limits and shows the maximum trip points which are used for the protection system. The solid lines indicate a locus of departure from nucleate boiling ratio (DNBR) equal to the DNBR limit at four pressures, and the dashed lines indicate maximum permissible trip points for the overtemperature ΔT reactor trip. See Chapter 4 for more information on the different types of fuels used and their associated DNBR limits. Safety limits are given in the Technical Specifications; however, the actual setpoints are lower to allow for measurement and instrumentation errors. The overpower ΔT reactor trip limits the maximum core power independent of the DNBR. Adequate margins exist between the maximum nominal steady-state operating point, which includes allowance for temperature, calorimetric, and pressure errors, and required trip points to preclude a spurious trip during design transients.

A block diagram of the RPS showing various reactor trip functions and interlocks is shown in Figure 7.2-2.

7.2.1.1 System Safety Features

7.2.1.1.1 Separation of Redundant Channels

The RPS is designed to achieve separation between redundant protection channels. The channel design is applied to the processing and the logic portions of the RPS, and is illustrated by Figure 7.2-3. Although the illustration is for four channel redundancy, the design is applicable to two and three channel redundancy.

Separation of redundant channels originates at the process sensors and continues along the wiring route and through containment penetrations to the protection racks. Isolation of wiring is achieved using separate wireways, cable trays, conduit runs, and containment penetrations for each redundant channel. Equipment is separated by locating redundant components in different protection racks. Each redundant channel is energized from a separate ac power feed (bus). Logic equipment separation is achieved by providing separate racks, each associated with individual trip breakers.

The partial trip signal processing circuits are housed in the protection racks, and are the final operational components in a protection channel. Each partial trip output drives two logic relays ("C" and "D"). The contacts from the "C"

relays are interconnected to form the required actuation logic for trip breaker number one (TB-1). The transition from channel identity to logic identity is made at the logic relay coil/relay contact interface. As such, there is both electrical and physical separation between the processing and the logic portions of the RPS. The above logic network is duplicated for trip breaker number two (TB-2) using the contacts from the "D" relays. Therefore, the two redundant reactor trip logic channels are physically separated and electrically isolated from one another.

7.2.1.1.2 Protection System Independence

The protection system is designed to be independent of the status of the control system, plant data logging computer, indicators, recorders, and plant annunciators. However, these systems and monitors derive signals from the protection systems through isolation devices, which are part of the protection systems. The isolation devices prevent any perturbation of the protection signal (input) due to disturbance of the isolated signal (output) which could occur near any termination of the output wiring external to the protection and safeguards racks. A detailed discussion of the isolation devices used in this plant is given in References 2 and 6 of Section 7.1.

7.2.1.1.3 Power Source

The power sources for the RPS are described in Chapter 8. The source of electrical power for the measuring elements and the actuation of circuits in the Engineered Safety Features System instrumentation is also from these buses.

The Eagle 21 process protection racks are provided with power from the 120 Vac instrument power supply buses (Bus 111(211) for Protection Set I, Bus 112(212) for Protection Set II, Bus 113(213) for Protection Set III and Bus 114(214) for Protection Set IV). As described in Chapter 8, each bus is normally supplied by its associated inverter. The Eagle 21 System utilizes circuitry and time sequencing of cabinet loads during system startup to limit the peak in-rush current. This reduces the in-rush demand on the inverter to an acceptable level.

The Man-Machine Interface racks are supplied with power from 120 Vac distribution panels within Class 1E motor control centers. Fuses coordinated with the 120 Vac panel supply breaker provide Class 1E/non-Class 1E isolation. The Man-Machine Interface racks are supplied with power from Class 1E buses because it is desirable to have power available in the event of a loss of off-site power.

The following requirements apply for each Eagle 21 process protection and Man-Machine Interface rack:

Voltage:	120 Vac +/-10% (108 to 132 Vac AC)
Frequency:	60 Hz +/-5% (57 to 63 Hz)
Continuous Current:	
Process Protection Rack:	Not more than 7 amperes (RMS)
Man-Machine Interface Rack:	Not more than 4 amperes (RMS)
In-Rush Current:	
Process Protection Rack:	Not more than 30 amperes (peak)
Man-Machine Interface Rack:	Not more than 35 amperes (peak)

7.2.1.1.4 Protection Actions

7.2.1.1.4.1 Reactor Trip Description

Rapid reactivity shutdown is provided by the insertion of rod cluster control assemblies (RCCA) by free fall. Duplicate series-connected circuit breakers supply all power to the control rod drive mechanisms. The RCCA drive mechanisms must be energized for the RCCAs to remain withdrawn from the core. Automatic reactor trip occurs upon the loss of power to the control rod drive mechanisms. The trip breakers are opened by the undervoltage coils and shunt-trip coils on both breakers. The undervoltage coils which are normally energized become de-energized, and the normally de-energized shunt-trip coils become energized by any one of the several trip signals.

The design of the devices providing signals to the circuit breaker trip coils is such as to cause these coils to trip the breaker on reactor trip signal or power loss.

Certain reactor trip channels are automatically bypassed at low power where they are not required for safety. Nuclear source range and intermediate range trips are specifically provided for protection at low power or subcritical operation. At higher power operations, the trips of these two ranges are bypassed by manual action.

During power operation, a sufficient amount of rapid shutdown capability in the form of control rods is administratively maintained by means of the control rod insertion limit monitors. Administrative control requires that all shutdown group rods be in the fully withdrawn position during power operation.

A listing of reactor trips, means of actuation, and the coincident logic requirements may be found in Table 7.1-2 with references to interlocks as listed in Table 7.1-1. These tables are a synopsis of the functional diagrams of Reference 1.

The block diagrams for the circuits named in Reference 1 may be found in References 2 and 4. A nonproprietary synopsis of the application of circuits is given within this text under the name of the tripping action.

A list of RPS instrument numbers is located in Table 16.3-1.

7.2.1.1.4.1.1 Manual Trip

The manual actuating devices are independent of the automatic trip circuitry and are not subject to failures which make the automatic circuitry inoperable. Actuating either of two manual trip buttons located in the Control Room initiates a reactor trip which in turn initiates a turbine trip.

7.2.1.1.4.1.2 High Neutron Flux (Power Range) Trip

This circuit trips the reactor when two out of four power range channels read above the trip setpoint. There are two independent trip settings, a high and a low setting. The high trip setting provides protection during normal power operation. The low setting, which provides protection during startup, can be manually bypassed when two out of four power range channels read above approximately 10% of full power (P-10). Three out of four channels below 10% power automatically reinstates the trip function. The high setting is always active.

7.2.1.1.4.1.3 High Neutron Flux (Intermediate Range) Trip

This circuit trips the reactor when one out of two intermediate range channels reads above the trip setpoint. This trip, which provides protection during reactor startup, can be manually bypassed if two out of four power range channels are above approximately 10% of full power (P-10).

Three out of four channels below this value automatically reinstates the trip function. The intermediate channels, including detectors, are separate from the power range channels.

7.2.1.1.4.1.4 High Neutron Flux (Source Range) Trip

This circuit trips the reactor when one of two source range channels reads above the trip setpoint. This trip, which provides protection during reactor startup, can be manually bypassed when one of two intermediate range channels reads above the P-6 setpoint value and is automatically reinstated when both intermediate range channels decrease below the P-6 value reset. This trip is automatically bypassed by two out of four high power range signals (P-10) (approximately 10% power). The trip function can also be reinstated below P-10 by an administrative action requiring coincident manual actuation. The trip point is set between the P-6 value and the maximum source range power level (Figure 7.2-4).

7.2.1.1.4.1.5 Positive High Neutron Flux Rate (Power Range) Trip

This circuit trips the reactor when an abnormal rate of increase in nuclear power occurs in two out of four power range channels. This trip provides protection against rod ejection accidents of low worth from midpower and is always active.

7.2.1.1.4.1.6 Negative High Neutron Flux Rate (Power Range) Trip

This circuit trips the reactor when an abnormal rate of decrease in nuclear power occurs in two out of four power range channels. This trip provides protection against multiple dropped rods and is always active.

7.2.1.1.4.1.7 Overtemperature ΔT Trip

The purpose of this trip is to protect the core against departure from nucleate boiling (DNB). This trips the reactor on coincidence of two out of four signals, with one set of temperature measurements per loop. The setpoint for this reactor trip is continuously calculated, as shown on Figure 7.2-5, for each loop. The overtemperature ΔT trip equation is as follows:

$$\Delta T\left(\frac{1+\tau_4 S}{1+\tau_5 S}\right) \leq \Delta T_o\left[K_1 - K_2\left(\frac{1+\tau_1 S}{1+\tau_2 S}\right)(T - T') + K_3(P - P') - f_1\ (\Delta I)\right]$$

Where:

$\frac{1 + \tau_4 S}{1 + \tau_5 S}$	=	Lead-lag compensator on measured ΔT
τ_4, τ_5	=	Time constants utilized in the lead-lag controller for ΔT, τ_4 = 8 seconds, τ_5 = 3 seconds
ΔT_0	=	Indicated ΔT at RATED THERMAL POWER
K_1	=	1.36
K_2	=	0.0180/°F
$\frac{1 + \tau_1 S}{1 + \tau_2 S}$	=	The function generated by the lead-lag controller for T_{avg} dynamic compensation
τ_1, τ_2	=	Time constants utilized in the lead-lag controller for T_{avg}, τ_1 = 33 seconds, τ_2 = 4 seconds
T	=	Average temperature, °F
T'	=	$\leq$ 562.2°F (Nominal T_{avg} at RATED THERMAL POWER)
K_3	=	0.000935
P	=	Pressurizer pressure, psig
P'	=	2235 psig (Nominal RCS operating pressure)
S	=	Laplace transform operator, S^{-1}

and f_1 (ΔI) is a function of the indicated difference between top and bottom detectors of the power range nuclear ion chamber; with gains to be selected based on measured instrument response during plant startup tests such that:

(i) for qt - qb between -50 percent and +8.0 percent f_1 (ΔI) = 0 (where qt and qb are percent RATED THERMAL POWER in the top and bottom halves of the core respectively, and qt + qb is total THERMAL POWER in percent of RATED THERMAL POWER).

(ii) for each percent that the magnitude of (qt - qb) exceeds -50 percent, the ΔT trip setpoint shall be automatically reduced by 0.0 percent of its value at RATED THERMAL POWER.

(iii) for each percent that the magnitude of (qt - qb) exceeds +8.0 percent, the ΔT trip setpoint shall be automatically reduced by 1.66 percent of its value at RATED THERMAL POWER.

The four power range ion chamber units separately feed each overtemperature ΔT trip channel. Thus, a single failure neither defeats the function nor causes a spurious trip. Changes in f(ΔI) can only lead to a decrease in trip setpoint.

Initiation of automatic turbine load runback by means of an overtemperature ΔT signal is discussed later in this section.

7.2.1.1.4.1.8 Overpower ΔT Trip

The purpose of this trip is to protect against excessive power (fuel rod rating protection). This trips the reactor on coincidence of two out of four signals, with one set of temperature measurements per loop.

The setpoint for this reactor trip is continuously calculated for each loop. The overpower ΔT trip equation is as follows:

$$\Delta T\left(\frac{1+\tau_4 S}{1+\tau_5 S}\right) \leq \Delta T_o\left[K_4 - K_5\left(\frac{\tau_3 S}{1+\tau_3 S}\right)T - K_6\,(T - T'') - f_2(\Delta I)\right]$$

Where:

$\frac{1+\tau_4 S}{1+\tau_5 S}$	=	Lead-lag compensator on measured ΔT
τ_4, τ_5	=	Time constants utilized in the lead-lag controller for ΔT, τ_4 = 8 seconds, τ_5 = 3 seconds.
ΔT_0	=	Indicated ΔT at RATED THERMAL POWER
K_4	=	1.09
K_5	=	0.020/°F for increasing average temperature and 0 for decreasing average temperature
$\frac{\tau_3 S}{1+\tau_3 S}$	=	The function generated by the lead-lag controller for T_{avg} dynamic compensation
τ_3	=	Time constant utilized in the lead-lag controller for T_{avg}, τ_3 = 10 seconds.
K_6	=	0.002117/°F for T>T" and K_6 = 0 for T≤T"
T	=	Average temperature, °F
T''	=	Indicated T_{avg} at RATED THERMAL POWER (calibration temperature for ΔT instrumentation, ≤ 562.2°F)
S	=	Laplace transform operator, S^{-1}
$f_2(\Delta I)$	=	0 for all ΔI

Initiation of automatic turbine load runback by means of an overpower ΔT signal is discussed later in this section.

7.2.1.1.4.1.9 Low Pressurizer Pressure Trip

The purpose of this trip is to protect against excessive core steam voids and to limit the range of required protection afforded by the overtemperature ΔT trip. This trips the reactor on coincidence of two out of four low pressurizer pressure signals. This trip is blocked when three of four power range channels and two out of two turbine first stage pressure channels read below approximately 10% power (P-7). Each channel is lead-lag compensated.

7.2.1.1.4.1.10 High Pressurizer Pressure Trip

The purpose of this trip is to limit the range of required protection from the overtemperature ΔT trip and to protect against Reactor Coolant System overpressure. The reactor is tripped on coincidence of two out of four high pressurizer pressure signals.

7.2.1.1.4.1.11 High Pressurizer Water Level Trip

This trip is provided as a backup to the high pressurizer pressure trip. The coincidence of two out of three high pressurizer water level signals trips the reactor. This trip is blocked when three out of four power range channels and two out of two turbine first stage pressure channels read below approximately 10% power (P-7).

7.2.1.1.4.1.12 Low Reactor Coolant Flow Trip

This trip protects the core from DNB following a loss of coolant flow. The means of sensing loss of coolant flow are described below:

1. Low Primary Coolant Flow Trip

   A low loop flow signal is generated by two out of three low flow signals per loop. Above the P-7 setpoint (approximately 10% of full power) low flow in any two loops results in a reactor trip. Above the P-8 setpoint (approximately 28% of full power) low flow in any loop results in a reactor trip.

2. Reactor Coolant Pump Breaker Position Trip

   One open breaker signal is generated for each reactor coolant pump. Above the P-7 setpoint, the reactor trips on two open breaker signals. Above the P-8 setpoint, the reactor trips on one open breaker signal.

3. Reactor Coolant Pump Undervoltage and Underfrequency Trips

   There is one underfrequency and one undervoltage sensor per bus. A two out of four underfrequency signal directly trips all of the

reactor coolant pumps and indirectly trips the reactor through the pump breaker position trip. For undervoltage protection, there is an undervoltage sensor on each of the four buses. An undervoltage signal from two sensors will actuate a reactor trip above P-7.

All of these low reactor coolant flow trips are blocked below the P-7 setpoint (approximately 10% power).

7.2.1.1.4.1.13 Safety Injection System Actuation Trip

A reactor trip occurs when the Safety Injection (SI) System is actuated. The means of actuating the SI System trips are:

1. Two out of three low pressurizer pressure. Manual block is permitted by two out of three low pressurizer pressure. The SI System actuation low pressurizer pressure setpoint is below that of the manual block permissive low pressurizer pressure setpoint;

2. Two out of four high containment pressure;

3. Two out of three low steamline pressure of one line compared to other three lines (high differential pressure);

4. High steam flow in one out of two measurements per line in two out of four lines in coincidence with either two out of four low-low T_{avg} or two out of four low steamline pressure; and

5. One out of two manual.

These trips are listed in Table 7.1-2.

7.2.1.1.4.1.14 Turbine Generator Trip

A turbine trip is sensed by two out of three signals from low autostop oil pressure. A turbine trip causes a direct reactor trip above approximately 10% power (P-7) and results in a controlled short-term release of steam to the condenser which removes sensible heat from the RCS and thereby avoids steam generator safety valve actuation.

The turbine control system automatically trips the turbine generator under the conditions outlined in Chapter 10.

7.2.1.1.4.1.15 Low Feedwater Flow Trip

This trip protects the reactor from a sudden loss of its primary heat sink. The trip is actuated by a one out of two steam/feedwater flow mismatch in coincidence with one out of two low water level in any steam generator.

7.2.1.1.4.1.16 Low-Low Steam Generator Water Level Trip

The purpose of this trip is to prevent damage to the steam generator (which could cause a loss of the reactor's heat sink) in the case of a sustained steam/feedwater flow mismatch of insufficient magnitude to cause a low feedwater flow reactor trip. The trip is actuated on two out of three low-low water level signals in any steam generator.

7.2.1.1.4.2 Other Protective Features

7.2.1.1.4.2.1 Rod Stops

Rod stops are provided to prevent abnormal power conditions which could result from excessive control rod withdrawal initiated by either a control system malfunction or operator violation of administrative procedures.

Rod stops are given in Table 7.2-1.

7.2.1.1.4.2.2 Automatic Turbine Load Runback

Automatic turbine load runback is initiated by an approach to an overpower or overtemperature condition. This will prevent high-power operation which might lead to an overpower or an overtemperature ΔT trip.

Turbine load reference reduction is initiated by either an overtemperature or overpower ΔT signal in two of four loops.

If a turbine load runback were to occur while the unit is operating on the Economic Generating Control (EGC) System, the runback signal would lockout the EGC System. This feature prevents cycling between runbacks and EGC System control. See Section 7.7 for more information on the EGC System.

7.2.1.1.4.2.3 Control Group Rod Insertion Monitor

The purpose of the control group rod insertion monitor is to give warning to the operator of a decrease in shutdown margin. Since the amount of shutdown reactivity required for the design shutdown margin following a reactor trip increases with increasing power, the allowable rod insertion limits must be decreased with increasing power. Two parameters which are proportional to power are used as inputs to the insertion monitor. These are the ΔT between the hot leg and the cold leg, which is a direct function of reactor power, and T_{avg}, which is programmed as a function of power.

The rod insertion monitor used these parameters for each control rod group as follows:

$$Z_{LL} = A(\Delta T)_{auct} + B(T_{avg})_{auct} + C$$

Where:

Z_{LL}	=	maximum permissible insertion limit for affect control bank
$(\Delta T)_{auct}$	=	highest ΔT for all four loops
$(T_{avg})_{auct}$	=	highest T_{avg} of all four loops
A, B, C	=	constants chosen to maintain $Z_{LL} \geq$ actual limit based on physics calculations

The actual control rod group position (Z) is compared to Z_{LL} as follows:

If $Z - Z_{LL} \leq D$ a low alarm is actuated

If $Z - Z_{LL} \leq E$ a low-low alarm is actuated

Since the highest values of T_{avg} and ΔT are chosen by the auctioneering unit, a conservatively high representation of power is used in the insertion limit calculation.

Actuation of the low alarm alerts the operator of an approach to a reduced shutdown reactivity situation. Administrative procedures require the operator to add boron following normal procedures with the Chemical and Volume Control System (CVCS). Actuation of the low-low alarm requires the operator to initiate emergency boration procedures. The value for "E" is chosen to account for all instrumentation errors so that the low-low alarm would normally be actuated before the insertion limit is reached. The value for "D" is chosen to allow the operator to follow normal boration procedures. Figure 7.2-6 shows a schematic representation of the control group rod insertion monitor. In addition to the rod insertion monitor for the control groups, an alarm system is provided to warn the operator if any shutdown RCCA leaves the fully withdrawn position.

7.2.1.1.4.2.4 Anticipated Transient Without Scram Mitigation System

The basic logic for this system is shown in Figure 7.2-7. Four existing steam generator narrow range transmitter outputs are directed through safety-related signal isolators to four new and diverse bistables. An analog signal from the existing auctioneered nuclear power circuit is similarly isolated, then sent to a new bistable that automatically arms the

Anticipated Transients Without Scram (ATWS) Mitigation System (AMS) above 40% power and automatically inhibits its operation below 40% power. The digital bistable outputs are evaluated by three separate coincidence logic subsystems such that whenever two out of three logics agree that three out of four steam generator levels are low and power level is greater than 40%, then an AMS actuation signal is generated. The steam generator low level signals are delayed for 25 seconds (26 seconds for Unit 2) to give ample time for the RPS to function before the AMS. The AMS is maintained in the armed state by a 120 second (123 seconds for Unit 2) time delay when auctioneered nuclear power has decreased below 40% following an AMS actuation. This allows the Auxiliary Feedwater (AFW) System to function long enough to assure its protective function is accomplished. After the 120 second (123 seconds for Unit 2) time delay, the system can be manually reset from the Control Room. All AMS outputs to the safety-related AFW control circuits are isolated from the nonsafety-related AMS by safety-related relays. A test panel allows complete system functional testing of the AMS equipment and output relay coil circuit continuity, without actuation, during reactor operation. The AMS contains a dedicated uninterruptable power supply to allow operation during blackout events.

7.2.1.2 Design Basis

7.2.1.2.1 Reactor Protection System

The two redundant reactor trip logic channels are physically separated and electrically isolated from one another. The RPS is comprised of identifiable channels which are physically, electrically, and functionally separated and isolated from one another. For additional information on this topic, see Reference 1 of Section 7.1.

The protection system is designed in accordance with IEEE-279 "Criteria for Nuclear Power Plant Protection Systems," August 30, 1968. Detailed descriptions of the implementation of these principles are presented in the remainder of Section 7.2 and in Sections 7.1, 7.3, and 7.6.

7.2.1.2.2 Anticipated Transient Without Scram Mitigation System

The AMS is a nonsafety-related system designed to function as a backup system to the RPS in the event that it should fail during certain anticipated transient events, for example, loss of feedwater, loss of condenser vacuum, or loss-of-offsite power. The AMS shall initiate auxiliary feedwater flow and trip the main turbine whenever three out of four steam generator levels are less than 6% of steam generator narrow range span and the nuclear power level is greater than 40% of nominal full power. The system is diverse from the RPS from the sensor isolators to the initiating devices to preclude common mode failures to both systems. As a nonsafety grade system, the AMS is properly isolated from interfacing safety grade systems.

7.2.2 Analysis

7.2.2.1 Reactor Protection System and Departure from Nucleate Boiling

The following is a description of how the RPS prevents DNB.

The plant variables affecting the DNBR are:

1. thermal power,
2. coolant flow,
3. coolant temperature,
4. coolant pressure, and
5. core power distribution.

Figure 15.0-1 illustrates the typical core limits for which DNBR for the hottest fuel rod is at the limit value and shows the overpower and overtemperature ΔT reactor trips locus as a function of T_{avg} and pressure. This illustration is derived from the inlet temperature versus power relationships.

Figure 7.2-5 illustrates T_{avg} versus ΔT protection. Variations in both flow and power are monitored by the overpower and overtemperature ΔT trips, since a decrease in flow would have the same effect on the measured loop ΔT signal as an increase in power. It is the nature of the DNB limits that a reduction in flow of 10% would require a reduction in power of only 5% to maintain the same DNBR, all other variables remaining constant. Thus, the permissible ΔT increases somewhat at a reduced flow. A reduction in flow increases the margin between the trip point and the actual core limit. Periodic measurements using the incore instrumentation system are used to verify that the actual core power distribution is within design limits.

Reactor trips for a fixed high pressurizer pressure and for a fixed low pressurizer pressure are provided to limit the pressure range over which core protection depends on the overpower and overtemperature ΔT trips.

Reactor trips on nuclear overpower and low reactor coolant flow are provided for direct, immediate protection against rapid changes in these parameters. However for all cases in which the calculated DNBR approaches the DNBR limit, a reactor trip on overpower and/or overtemperature ΔT would also be actuated.

For the postulated abnormal conditions, the exact combination of conditions (reactor coolant pressure, temperature and core power, instrumentation inaccuracies, etc.) will not cause a DNBR to go below the DNBR limit before a reactor trip. The simultaneous loss of power to all of the reactor coolant pumps is the accident condition most likely to approach the limiting DNBR for the calculated worst fuel rod. In any event, the DNBR is near the limit for only a few seconds.

The ΔT trip functions are based on the differences between measured hot leg and cold leg temperatures. These differences are proportional to core power.

The ΔT trip functions are provided with a nuclear differential flux feedback to reflect a measure of axial power distribution. This will assist in preventing an adverse axial distribution which could lead to exceeding the allowable core conditions.

In the event of a difference between the upper and lower ion chamber signals that exceeds the desired range, automatic feedback signals are provided to reduce the overpower-overtemperature trip setpoints, block rod withdrawal, and reduce the load to maintain appropriate operating margins to these trip setpoints. The operator can then manually adjust control rods using power range ion chamber information displayed on the control board to maintain the difference between top and bottom detectors within the desired range and thus enable the reactor to be returned to its former power value.

7.2.2.2 Specific Control and Protection Interactions

7.2.2.2.1 Nuclear Flux

Four power range nuclear flux channels are provided for overpower protection.

Isolated output from all four channels are auctioneered high for automatic rod control. If any channel fails in such a way as to produce a low output, that channel is incapable of proper overpower protection. Two out of four overpower trip logic will ensure an overpower trip if needed even with an independent failure in another channel.

In addition, the control system will respond only to rapid changes in indicated nuclear flux; slow changes or drifts are compensated by the temperature control signals. Finally, an overpower signal from any nuclear channel will block automatic rod withdrawal. The setpoint for this rod stop is below the reactor trip setpoint.

7.2.2.2.2 Coolant Temperature

One hot leg and one cold leg temperature measurement is made for each reactor coolant loop to provide protection. In addition, by use of isolation devices located in the temperature protection channel, the temperature signals are used for control. The temperature measurements and temperature difference measurements for each loop are used for protection with one channel per loop and two out of four reactor trip logic. The Reactor Control System uses the highest of the four isolated temperature measurements.

The hot and cold leg resistance temperature detectors (RTDs) are inserted into reactor coolant bypass loops. A bypass loop from upstream of the steam generator to downstream of the steam generator is used for the hot-leg RTDs and a bypass loop from downstream of the reactor coolant pump to upstream of the pump is used for the cold leg RTDs. The RTDs are located in manifolds within the Containment and are directly inserted into the reactor coolant bypass loop flow without thermowells. Thermowells are not used in order to keep the detector thermal lag small. The bypass arrangement permits replacement of defective temperature elements while the plant is at hot shutdown without draining or depressurizing the reactor coolant loops.

The RTDs are rigid, rugged devices designed to withstand main coolant high temperature, high pressure, and flow-induced vibration acceleration forces. Vibration amplification from these forces is minimized by designing the RTDs with a natural frequency greater than the frequencies produced by flow induced vibrations. The RTDs' natural frequency is also much higher than those associated with seismic disturbances. Seismic testing of the RTDs is not necessary since they are considered a rigid body at seismic disturbance frequencies and are designed and built to operate in the harsh environment of the RCS.

Three sampling probes are installed in a cross-sectional plane of each hot leg at approximately 120-degree intervals. Each of the sampling probes, which extends several inches into the hot leg coolant stream, contains five inlet orifices distributed along its length. In this way, a total of fifteen locations in the hot leg stream are sampled, providing a representative coolant temperature measurement. The two-inch diameter pipe leading to the manifold containing the RTDs provides mixing of the samples to give an accurate temperature measurement.

Care has been taken to distribute the flow evenly among the five orifices of each probe by effectively restricting the flow through the orifices. This has been done by designing a smaller overall orifice flow area than that of the common flow channel within the probe. This arrangement has also been applied to the flow transition from the three probe flow channels to the pipe leading to the temperature element manifold. The total flow area of the three probe channels has therefore been designed to be less than that of the two-inch pipe connecting the probes to the manifold.

The cold leg primary coolant flow is well mixed by the reactor coolant pumps. Therefore, the cold leg sample is taken directly from an ordinary two-inch pipe tap off the cold leg downstream of the pump.

The main requirement for reactor protection is that the temperature difference between the hot leg and cold leg vary linearly with power. All ΔT setpoints are in terms of the full-power ΔT; thus, absolute ΔT measurements are not required. Linearity of ΔT with power was verified during startup testing.

Reactor protection logic using reactor coolant loop temperatures is two out of four with one channel per reactor coolant loop. This complies with all applicable IEEE-279 criteria.

Reactor control is based upon signals derived from protection system channels after isolation by isolation devices such that no feedback effect can perturb the protection channels.

Since control is based on the highest average temperature from the four loops, the control rods are always moved based upon the most pessimistic temperature measurement with respect to margins to DNB. A spurious low average temperature measurement from any loop temperature control channel will cause no control action. A spurious high average temperature measurement will cause rod insertion (safe direction).

A common low flow alarm for all reactor coolant loops is provided on the main control board. The alarm provides the operator with immediate indication of a low flow condition in the bypass loops associated with any reactor coolant loop.

Local indicators are provided to monitor total flow through the RTD bypass manifolds for each loop. The indicators are located inside Containment but are accessible during power operations. Flow will be monitored:

1. Prior to restoring temperature channels to normal service following reopening of bypass loop isolation valves whenever a bypass loop has been out of service;

2. On a periodic basis; and

3. Following any bypass loop low flow alarm (see above).

In addition, channel deviation signals in the control system will give an alarm if any temperature channel deviates significantly from the other. Automatic rod withdrawal blocks will also occur if any one of four nuclear channels indicates an overpower condition or if any two of four temperature channels indicate an overtemperature or overpower condition. Two out of four trip logic is used to ensure that an overtemperature or overpower ΔT trip will occur if needed, even with an independent failure in another channel. Finally, as shown in Section 15.4, the combination of trips on nuclear overpower, high pressurizer water level, and high pressurizer pressure also serve to limit an excursion for any rate of reactivity insertion.

7.2.2.2.3 Pressurizer Pressure

The four pressurizer pressure protection channel signals are used for high and low pressure protection and as inputs to the overtemperature ΔT trip protection function (see Figure 7.2-8). Isolated output signals from these

channels are used for pressure control. These are used to control pressurizer spray and heaters and power-operated relief valves. Pressurizer pressure is sensed by fast response pressure transmitters with a time response of better than 0.2 seconds. A 1-second response time is used, which is more than adequate to cover the response characteristics of the tripping channels.

A spurious high pressure signal from one channel can cause low pressure by actuation of pressurizer spray and/or a relief valve. Additional redundancy is provided in the protection system to ensure low pressure protection, i.e., two out of four low pressure reactor trip logic and two out of three logic for SI.

The pressurizer heaters are incapable of overpressurizing the RCS. Maximum steam generation rate with heaters is about 15,000 lb/hr, compared with a total capacity of 1,260,000 lb/hr for the three safety valves and a total capacity of 420,000 lb/hr for the two power-operated relief valves. Therefore, overpressure protection is not required for a pressure control failure, however, two out of four high pressure trip logic is used.

In addition, either of the two relief valves can easily maintain pressure below the high pressure trip point. The two relief valves are controlled by independent pressure channels, one of which is independent of the pressure channel used for heater control. Finally, the rate of pressure rise achievable with heaters is slow, and ample time and pressure alarms are available for operator action.

7.2.2.2.4 Pressurizer Level

Three pressurizer level channels are used for reactor trip (two out of three high level). Isolated signals from these channels are used for level control, increasing or decreasing the pressurizer water level as required. A failure in the level control system could fill or empty the pressurizer at a slow rate (on the order of half an hour or more) (see Figure 7.2-9).

The design of the pressurizer water level instrumentation employs the usual tank level arrangement using differential pressure between an upper and lower tap on a column of water. A reference leg connected to the upper tap is kept full of water by condensation at the top of the leg.

7.2.2.2.4.1 Pressurizer High Level

A reactor trip on pressurizer high level is provided to prevent filling the pressurizer in the event of a rapid thermal expansion of the reactor coolant. However, a level control failure cannot actuate the safety valves because the high pressure reactor trip is set below the safety valve set pressure. With the slow rate of charging available, transients resulting from level control failure will not increase pressurizer pressure quickly enough to reach the safety valve set pressures.

Therefore, a control failure does not require protection system action. In addition, ample time and alarms are available for operator action.

7.2.2.2.4.2 Pressurizer Low Level

For control failures which tend to empty the pressurizer, there is no direct effect on reactor protection, since low pressurizer level is not utilized. CVCS letdown is isolated when low level is indicated by a noncontrolling channel. In addition, ample time and alarms exist for operator action.

7.2.2.2.5 Reactor Coolant Flow Measurement

Elbow taps are used on each of the four loops in the Primary Coolant System as an instrument device that indicates the status of the reactor coolant flow (see Reference 3). The basic function of this device is to provide information as to whether or not a reduction in flow rate has occurred. The correlation between flow reduction and elbow tap readout has been well established by the following equation:

$$\frac{\Delta P}{\Delta P_o} = \left[\frac{\omega}{\omega_o}\right]^2$$

Where:

ΔP_o = the referenced pressure differential with the corresponding referenced flow rate ω_o

ΔP = the pressure differential with the corresponding referenced flow rate ω

The full flow reference point is established during initial plant startup. The low flow trip point is then established by extrapolating along the correlation curve. The technique has been well established in providing core protection against low coolant flow in Westinghouse Pressurized Water Reactor (PWR) plants. The expected absolute accuracy of the channel is within $\pm$ 10% and field results have shown the repeatability of the trip point to be within $\pm$ 1%.

7.2.2.2.6 Steam Generator Water Level and Feedwater Flow

Before describing control and protection interaction for these channels, it is beneficial to review the protection system basis for this instrumentation (see Figure 7.2-10).

The basic function of the reactor protection circuits associated with low steam generator water level and low feedwater flow is to preserve the steam generator heat sink for removal of long-term residual heat. Should a complete loss of feedwater occur with no protective action, the steam generators would boil dry and cause an overtemperature-overpressure excursion in the reactor coolant. Reactor trips on temperature, pressure, and pressurizer water level will trip the unit before there is any damage to the core or RCS. Redundant AFW pumps are provided to prevent residual heat after trip from causing thermal expansion and discharge of the reactor coolant through the pressurizer relief valves. Reactor trips act before the steam generators are dry to reduce the required capacity and starting time requirements of these pumps and to minimize the thermal transient on the RCS and steam generators. Independent reactor trip circuits from each steam generator (water level-feedwater flow signals) are provided for the following reasons:

1. Should severe mechanical damage occur to the feedwater line to one steam generator, it is difficult to ensure the functional integrity of level and flow instrumentation for that unit. For instance, a major pipe break between the feedwater flow element and the steam generator would cause high flow through the flow element. The rapid depressurization of the steam generator would drastically affect the relation between downcomer water level and steam generator water inventory.

2. It is desirable to minimize thermal transients on a steam generator for credible loss of feedwater accidents. It should be noted that controller malfunctions caused by a protection system failure affect only one steam generator.

A spurious high flow signal from the feedwater flow channel being used for control would cause a reduction in feedwater flow and prevent that channel from tripping. A reactor trip on low-low water level, independent of indicated feedwater flow, will ensure a reactor trip if needed.

In addition, the three-element feedwater controller incorporates reset on level, such that with expected controller settings a rapid increase in the flow signal would cause only a small decrease in level before the controller reopened the feedwater valve. A slow increase in the feedwater signal would have no effect at all.

A spurious low steam flow signal would have the same effect as a high feedwater signal, discussed above.

A spurious high water level signal from the protection channel used for control will tend to close the feedwater valve. This level channel is independent of the level and flow channels used for reactor trip on low flow coincident with low level.

1. A rapid increase in the level signal will completely stop feedwater flow and lead to an actuation of a reactor trip on low feedwater flow coincident with low level.

2. A slow drift in the level signal may not actuate a low feedwater signal. Since the level decrease is slow, the operator has time to respond to low level alarms. Since only one steam generator is affected, automatic protection is not mandatory and reactor trip on two out of three low-low levels is acceptable.

Independent of the feedwater control system discussed above, a coincidence of two out of three high-high steam generator water level signals will close the main feedwater isolation valves and trip the main feedwater pumps. This provides steam generator overfill protection.

7.2.2.2.7 Steamline Pressure

One pressure channel per steamline is used for steamline break protection. These are combined with other signals. As shown in Table 7.1-2, two out of four high steam flow in coincidence with two out of four low-low T_{avg} or two out of four low steamline pressure will actuate SI.

7.2.2.3 Loss of Power

A loss of power in the RPS causes the affected channel to trip except for containment spray. All bistables operate in a normally energized state and go to a de-energized state to initiate action, with the exception of the containment spray bistables which must be energized to initiate spray.

7.2.2.4 Normal Operating Environment

Temperature in the Control Room and adjoining Equipment Room is maintained for personnel comfort at a nominal 75°F. Design specifications for protection equipment specify no loss of protection function over the temperature range from 40°F to 120°F and in relative humidity from 15% to 95%. Protective equipment in this space is designed and warranted to operate within design tolerance over this temperature range (References 5, 6, and 7).

Within Containment, the normal operating temperature for protection equipment, except excore neutron detectors, will be maintained at a nominal 120°F. Protection instrumentation is designed for continuous operation within design tolerance in this environment. Excore neutron detectors are designed for continuous operation at 135°F (ambient). The detectors will withstand operation at 175°F for short durations (8 hrs). The cavity cooling system is a completely redundant system, with operation of only one of the systems being sufficient to maintain the temperatures given above.

Process instrumentation in Containment, vital to monitoring plant status following a loss-of-coolant accident, are designed to operate within design tolerances in the postaccident environment. The Gamma-Metrics RCS-300 wide range dual fission chamber detector assemblies are designed for operation at 94°C (200°F) and are environmentally qualified.

Qualification testing has been performed on various safety systems such as process instrumentation, nuclear instrumentation, and relay racks. This testing involved demonstrating operation of safety functions at elevated ambient temperatures to 120°F for control room equipment and in full postaccident environment for required equipment in Containment. Detailed results of these tests are proprietary to the suppliers, but are on file at the suppliers and available for audit by qualified parties.

7.2.2.5 Reactor Protection System Testing

Provisions are made, for process variables, to manually place the output of the comparators in a tripped condition, if required, for "at power" testing of all portions of each trip circuit including the reactor trip breakers. Administrative procedure requires that the final element in a trip channel (required during power operation) is placed in the trip mode before that channel is taken out of service for repair or testing so that the single failure criterion is met by the remaining channels. In the source and intermediate ranges, where the trip logic is one out of two for each range, bypasses are provided for this testing procedure.

Nuclear instrument power range channels are tested by superimposing a test signal on the sensor signal so that the reactor trip protection is not bypassed. Based upon two out of four coincident logic, this will not trip the reactor; however, a trip will occur if a reactor trip is required.

Provisions are made for the insertion of test signals in each instrument loop. Verification of the test signal is made by instruments at test points specifically provided for this purpose. This enables testing and calibration of meters and comparators. Transmitters and sensors are checked against each other and against plant readout equipment when required during normal power operation.

7.2.2.5.1 Process Protection Channel Testing

The basic arrangement of elements comprising a representative protection channel is shown in Figure 7.2-11. These elements include a sensor or transmitter, power supply, comparator, Eagle partial trip switch, MMI, and test points. A portion of the logic system is also included to illustrate the overlap between the typical process channel and the corresponding logic circuits. The Process Protection System symbols are given in Table 7.2-2.

Each protection rack is provided with a test panel that contains test points, status lights, an interface for the MMI and keyswitch that permits the process channels in the rack to be tested. To gain access to the test panel, a protection rack door must be opened. Opening the door on one rack initiates a status light on the main control board. If the rack doors of two protection sets are mistakenly opened, the operator will be alerted by an alarm.

As discussed in section 7.1.2.1.1.10.2, channel test of a process channel is performed via the Man Machine Interface (MMI) Test Rack. Administrative actions performed from the MMI enable a channel to be placed in the channel trip or bypass mode. The channel trip mode interrupts the individual channel comparator outputs to the logic circuitry to de-energize the associated logic input relay(s); whereas the bypass mode disables the individual channel bistable trip circuitry which forces the associated logic input relays to remain in the non-tripped state until the bypass is removed. If an Eagle-21 protection channel has been bypassed for any purpose, an annunciator is actuated in the Control Room. Following completion of the channel test, the MMI is disconnected from the protection rack and the rack door closed. Bypass mode will only be used as permitted by the Technical Specifications.

Channel tests are accomplished by simulating a process measurement signal, varying the simulated signal over its signal span and checking the correlation of comparator setpoints, channel readouts, and other loop elements with precision portable readout equipment. Test injection is provided via the channel test for injection of the simulated process signal into each process protection channel. Test points are provided in the channel to facilitate an independent means for precision measurement and correlation of the test signal. This procedure does not require any tools nor does it involve, in any way, the removal or disconnection of wires in the channel under test. In general, the process channel circuits are arranged so the channel power supply is loaded and is providing sensing circuit power during channel test. Load capability of the channel power supply is thereby verified by the channel test.

7.2.2.5.2 Nuclear Instrumentation Channel Testing

Nuclear Instrumentation System (NIS) channels are tested by superimposing the test signal on the actual detector signal being received by the channel. The output of the bistable is not placed in a tripped condition prior to testing. A valid trip signal would then be added to the existing test signal, and would thereby cause a channel trip at a somewhat lower

percent of actual reactor power. Protection comparator operation is tested by increasing the test signal (level signal) to the comparator trip level and verifying operation at control board alarms and/or at the NIS racks.

An NIS channel which can cause a reactor trip through one of two protection logic (source or intermediate range) is provided with a bypass function which prevents the initiation of a reactor trip from that particular channel during the short period that it is undergoing test. The power range channels do not require bypass of the reactor trip function for test, since the protection logic is two of four. In all cases, the bypass condition and the channel test condition are alarmed on the NIS drawer and at the main control board. An interlock feature between the bypass switch and channel test switch on each channel keeps the test signal from being activated until the bypass function has been inserted. Administrative control is required to ensure that only one protection channel is placed in the bypass condition at any one time. The power range reactor trips are not affected by the bypass function described above. Therefore, these power range trips will be active if required. No provision has been made in the channel test circuit for reducing the channel signal level below that signal being received from the NIS detector.

7.2.2.5.3 Logic Channel Testing

The general design features of the logic system are described below. The trip logic channels for typical two out of three and two out of four trip functions are shown in Figure 7.2-12. The process portions of these channels are shown in Figure 7.2-13. Each comparator drives two relays, one in each channel.

A series configuration is used for the trip breakers, and they are actuated (opened) by undervoltage coils and shunt trip coils. The undervoltage tripping mechanism is consistent with a de-energize-to-trip preferred failure mode. The planned logic system testing includes exercising the reactor trip breakers to demonstrate system integrity. Bypass breakers are provided for this purpose. During normal operation, these bypass breakers are open. Administrative control will be used to minimize the amount of time these breakers are closed and to prevent simultaneous operation of both bypass breakers. Indication of a closed condition of either bypass breaker is provided locally, on the test panel, and on the main control board.

As shown in Figure 7.2-12, the trip signal from the logic network is simultaneously applied to the main TB associated with the specific logic chain as well as the bypass breaker (AB) associated with the alternate TB. Should a valid trip signal occur while AB-1 is bypassing TB-1, TB-2 will be opened through its associated logic train. The trip signal applied to TB-2 is simultaneously applied to AB-1, thereby opening the bypass around TB-1.

TB-1 would either have been opened manually as part of the test or would be opened through its associated logic train, which would be operational or tripped during a test.

An auxiliary relay is located in parallel with the undervoltage coils of the trip breakers. This relay is connected to an event recorder which is used to indicate transmission of the trip signal through the logic network during testing. Lights are also provided to indicate the status of the logic relays.

The following procedure describes the method used for testing TB-1 and its associated logic network:

1. Rack-in the bypass breaker (AB-1), manually close and trip AB-1 to verify operation;

2. Reclose AB-1;

3. Test trip TB-1. Verify by the shunt-trip test light energized and event recorder;

4. Select function to be tested;

5. With the selector switch in the "BLOCK TRIP" position, sequentially de-energize the trip relays (A1, A2, A3) for each logic combination (1-2, 1-3, 2-3). Verify that the logic network for each logic combination for TB-1 is made up by viewing the reactor trip breaker test light and the shunt-trip test light;

6. Repeat "5" for each function;

7. Reset TB-1;

8. Trip TB-1 via its shunt-trip coil to validate prior test results as evidenced by the test lights; and

9. Reset TB-1. Trip and rack-out AB-1.

In order to minimize the possibility of operational errors, such as tripping the reactor inadvertently or only partially checking all logic combinations, each logic network includes a logic channel test panel. This panel includes those switches, indicators, and recorders needed to perform the logic system test. This arrangement is illustrated in Figure 7.2-14. The test switches used to de-energize the trip comparator relays operate through interposing relays as shown in Figures 7.2-11 and 7.2-13. This approach avoids violating the separation philosophy used in the process channel design. Thus, although test switches for redundant channels are conveniently grouped on a single panel to facilitate testing, physical and electrical separation of redundant protection channels are maintained by

the inclusion of the interposing relay which is actuated by the logic test switches.

7.2.3 References, Section 7.2

1. Westinghouse Propriety Class 2, Functional Diagrams Drawing No. 5653D30 Sub 9; Sheets 1 through 8 and 15 through 17.

2. Commonwealth Edison Company, Zion Unit 1, Block Diagrams Drawing No. 3D21711, Sheets 1 through 36.

3. J.W. Murdock, "Performance Characteristic of Elbow Flowmeters," Translation of the ASME, September 1964.

4. Commonwealth Edison Company, Zion Unit 2, Block Diagrams Drawing No. 3D22025, Sheets 1 through 36.

5. WCAP-8687, Supplement 1, EQDP-ESE-69 "Equipment Qualification Data Package".

6. WCAP-8687, Supplement 2-E69A "Equipment Qualification Test Report".

7. WCAP-8687, Supplement 2-E69B "Equipment Qualification Test Report".

| 8. (Deleted)

TABLE 7.2-1

ROD STOPS

Rod Stop	Actuation Signal	Rod Motion To Be Blocked
1. Nuclear Overpower	One out of four high power range nuclear flux or one out of two high intermediate range nuclear flux	Automatic and Manual Withdrawal
2. High ΔT	Two out of four overpower ΔT or two out of four overtemperature ΔT	Automatic and Manual Withdrawal
3. Low Power	Low turbine impulse pressure	Automatic Withdrawal

Actuation of rod stop No. 2 above is accompanied by the initiation of turbine load reference reduction.

TABLE 7.2-2 (1 of 2)

LEGEND OF SYMBOLS

Al	-	Alarm
Buf	-	Buffer
f	-	Special Function (such as a pressure compensation unit or lead/lag compensation)
F	-	Amplifier
FC	-	Flow Comparator
FI	-	Flow Indicator
FLTR	-	Filter
FS	-	Flow Stream
FT	-	Flow Transmitter
FW	-	Flow Water
FWF	-	Feedwater Flow
Hi LRT	-	High Level Reactor Trip
Hi PRT	-	High Pressure Reactor Trip
ISOL	-	Isolation
LC	-	Level Comparator
LD	-	Level Input to Plant Computer
LI	-	Level Indicator
Lo-Lo	-	Low Low Level
Lo L	-	Low Level
Lo LRT	-	Low Level Reactor Trip
Lo PRT	-	Low Pressure Reactor Trip
L_{ref}	-	Programmed Reference Level
L/L	-	Lead/Lag
LR	-	Level Recorder
LT	-	Level Transmitter
NC	-	Nuclear Flux Controller
NE	-	Nuclear Detector
NI	-	Nuclear Flux Indicator
NM	-	Nuclear Modifier
NQ	-	Nuclear Power Supply
OTSP	-	Overtemperature Setpoint
OPSP	-	Overpressure Setpoint
P	-	Pressure
PC	-	Pressure Comparator
PD	-	Pressure Input to Plant Computer
PI	-	Pressure Indicator
PM	-	Pressure Modifier
P_{ref}	-	Programmed Reference Pressure
PS	-	Power Supply
PT	-	Pressure Transmitter
QM	-	Flux Modifier
RSA	-	Redundant Sensor Algorithm
RT	-	Reactor Trip
RTD	-	Resistance Temperature Detector
S	-	Control Channel Transfer Switch (used to maintain auto channel during test of the protection channel)
SI	-	Safety Injection

TABLE 7.2-2 (2 of 2)

LEGEND OF SYMBOLS

sp	-	Setpoint
STM	-	Steam
T	-	Transmitter
TC	-	Temperature Comparator
TD	-	Temperature Input to Plant Computer
TE	-	Temperature Element
TI	-	Temperature Indicator
TM	-	Temperature Modifier
TP	-	Test Point
TW	-	Thermowell
OU,L	-	Excore upper or lower ion chamber flux signals
$\frac{d}{dt}$	-	Time Rate Change
Σ	-	Sum
$f(\Delta I)$	-	A function of flux difference between upper and lower long ion chamber sections (F)

- Figure 7.2-1 was Intentionally Deleted -

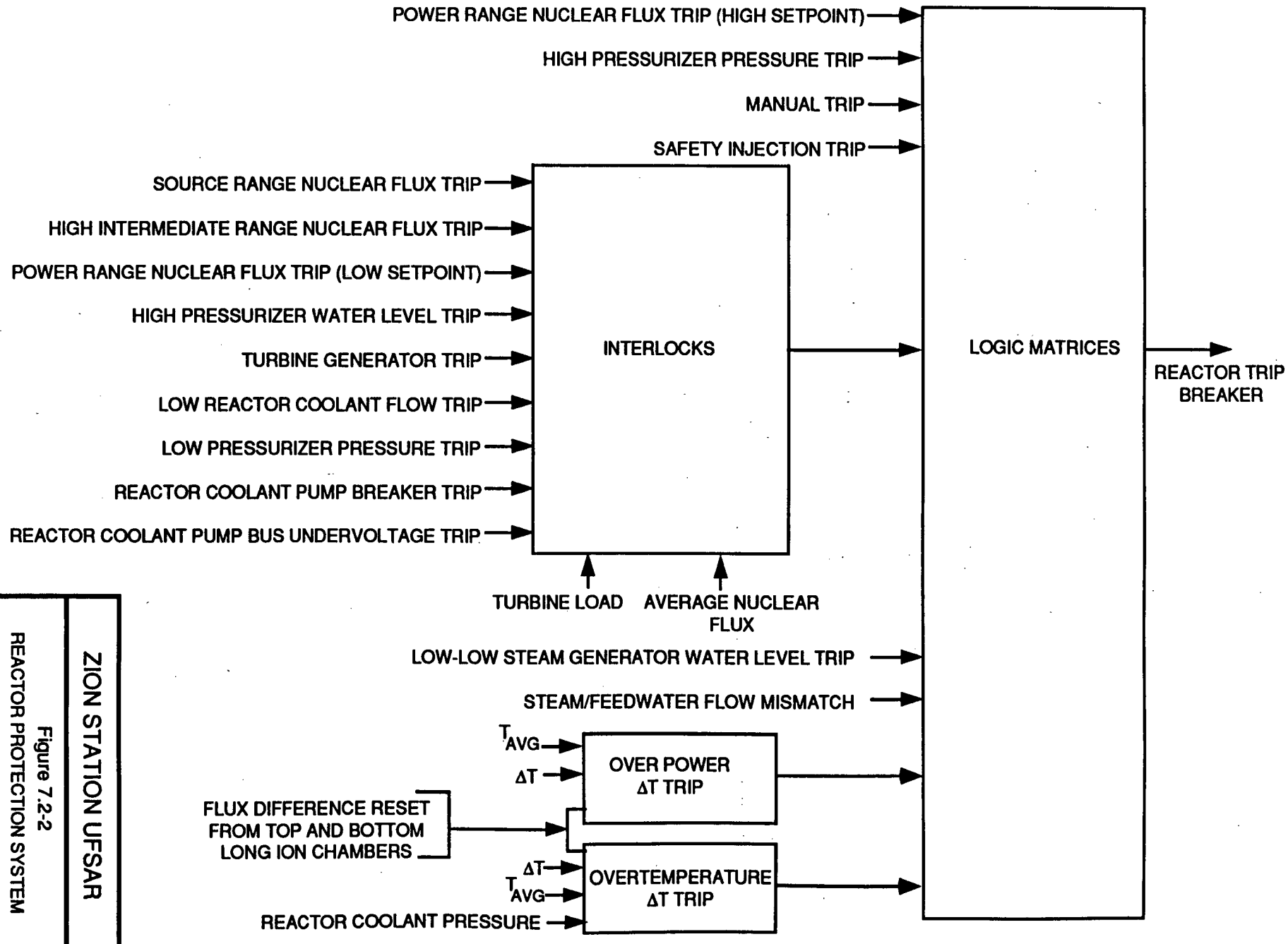

ZION STATION UFSAR

Figure 7.2-2
REACTOR PROTECTION SYSTEM

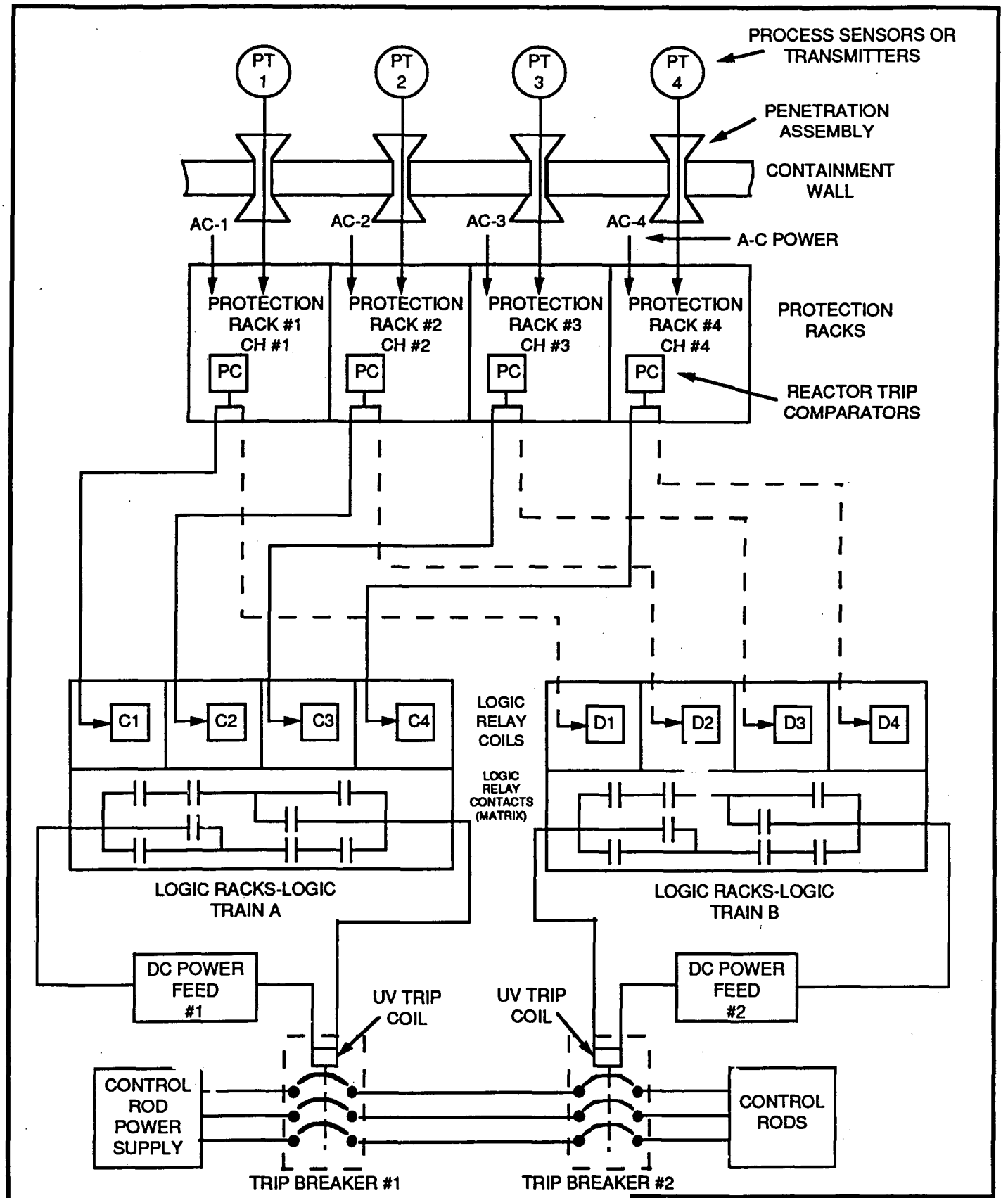

ZION STATION UFSAR

Figure 7.2-3

DESIGN TO ACHIEVE ISOLATION BETWEEN CHANNELS

JULY 1993

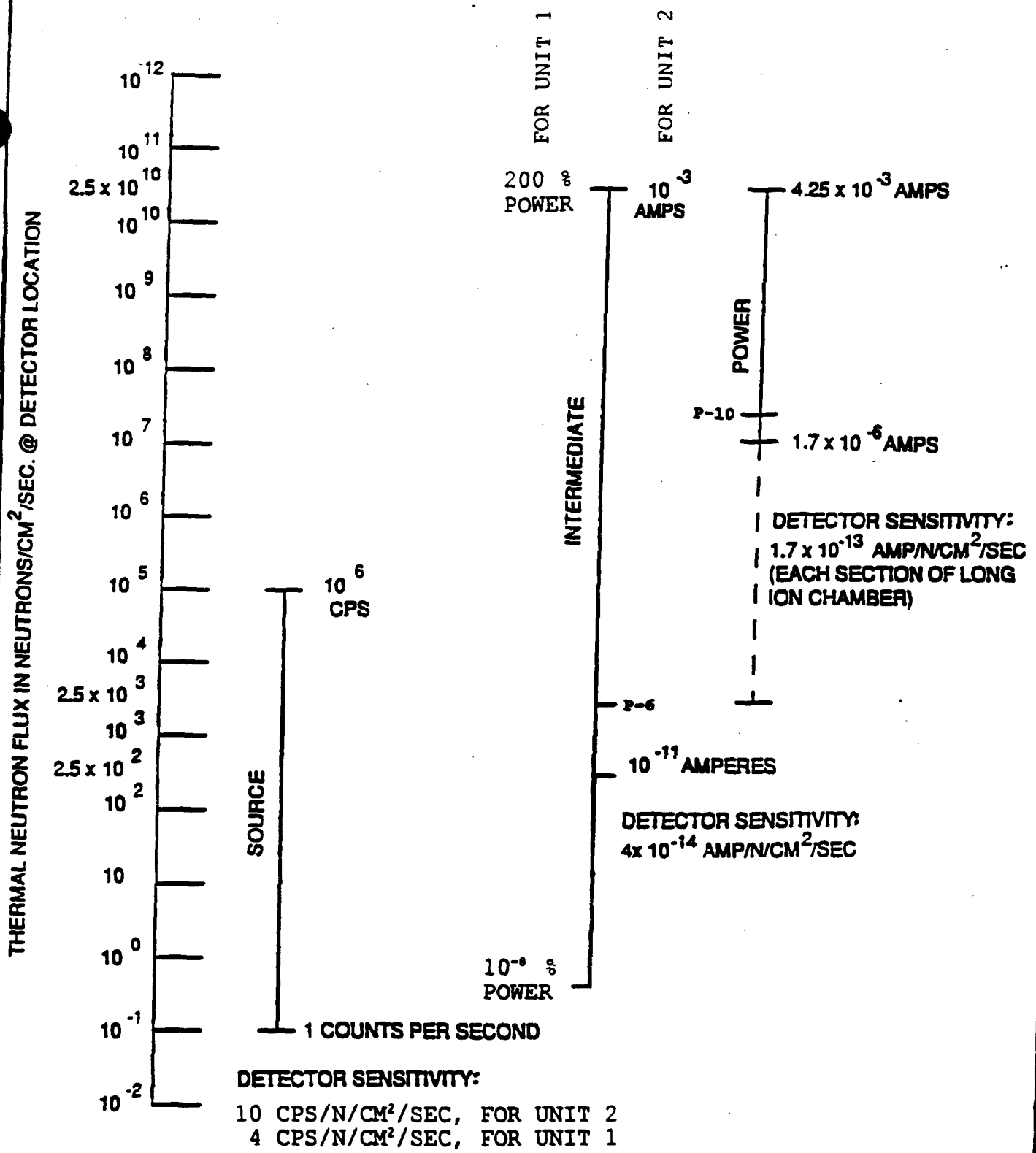

ZION STATION UFSAR

Figure 7.2-4
NEUTRON DETECTORS AND
RANGE OF OPERATION
JULY 1995

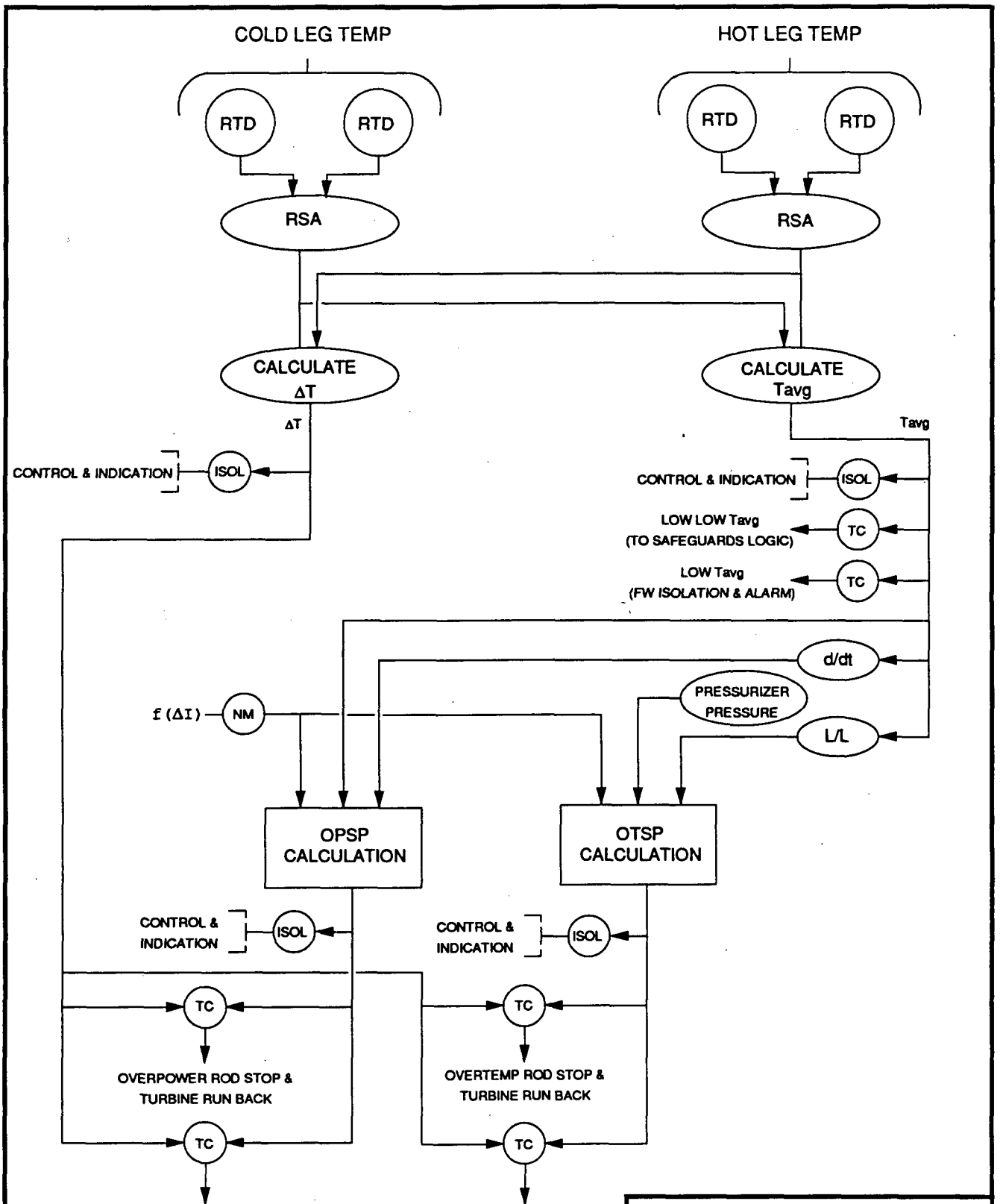

ZION STATION UFSAR

Figure 7.2-5

T_{AVG} - ΔT PROTECTION SYSTEM

JULY 1993

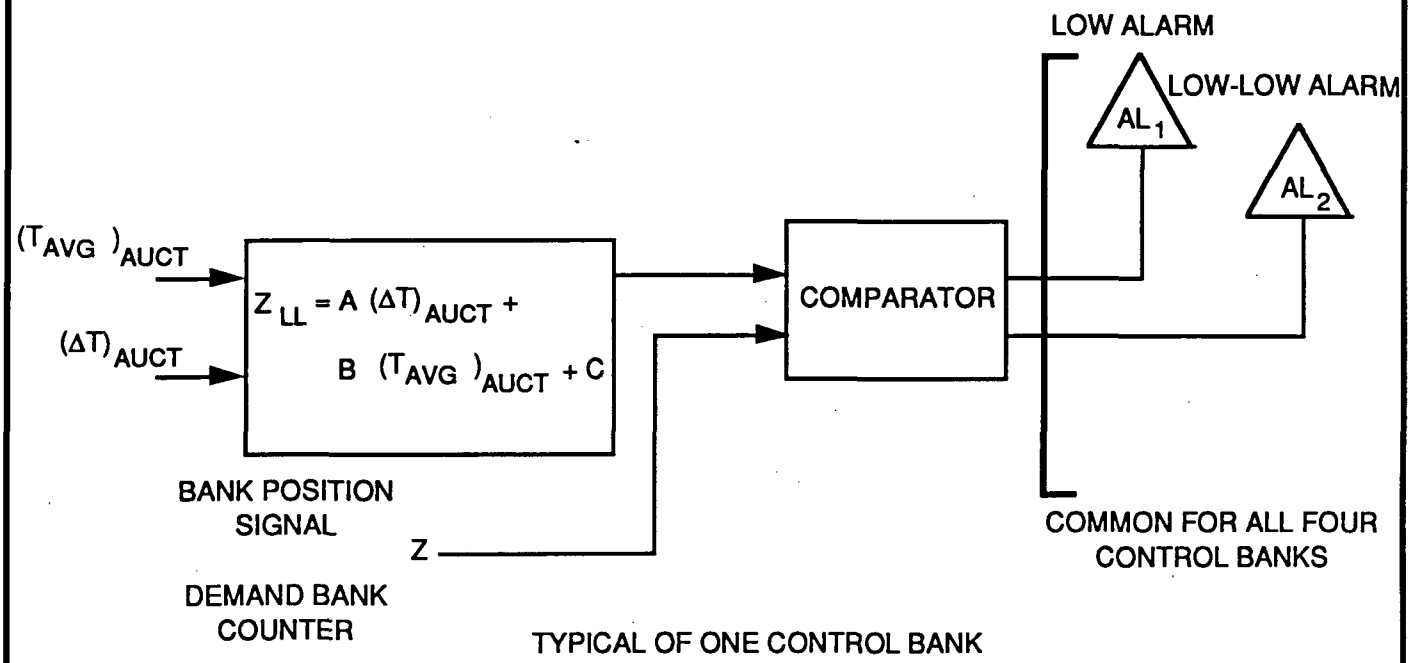

NOTE:
1. PROCESS CIRCUITRY IS USED FOR THE COMPARATOR NETWORK.
2. COMPARISON IS DONE FOR ALL CONTROL BANKS.

ZION STATION UFSAR

Figure 7.2-6

CONTROL ROD BANK INSERTION MONITOR

JULY 1993

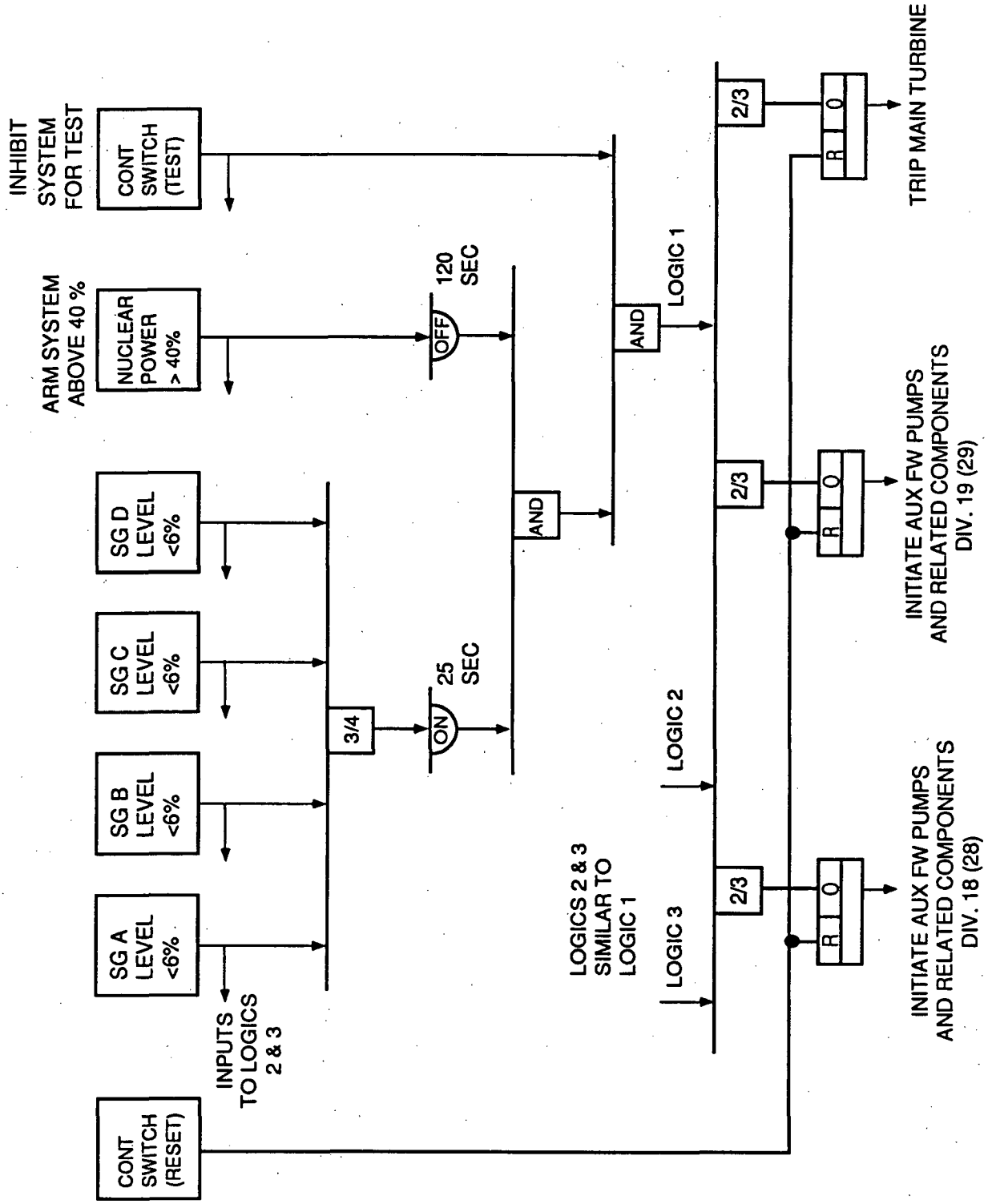

ZION STATION UFSAR

Figure 7.2-7

ATWS MITIGATION SYSTEM SIMPLIFIED LOGIC DIAGRAM

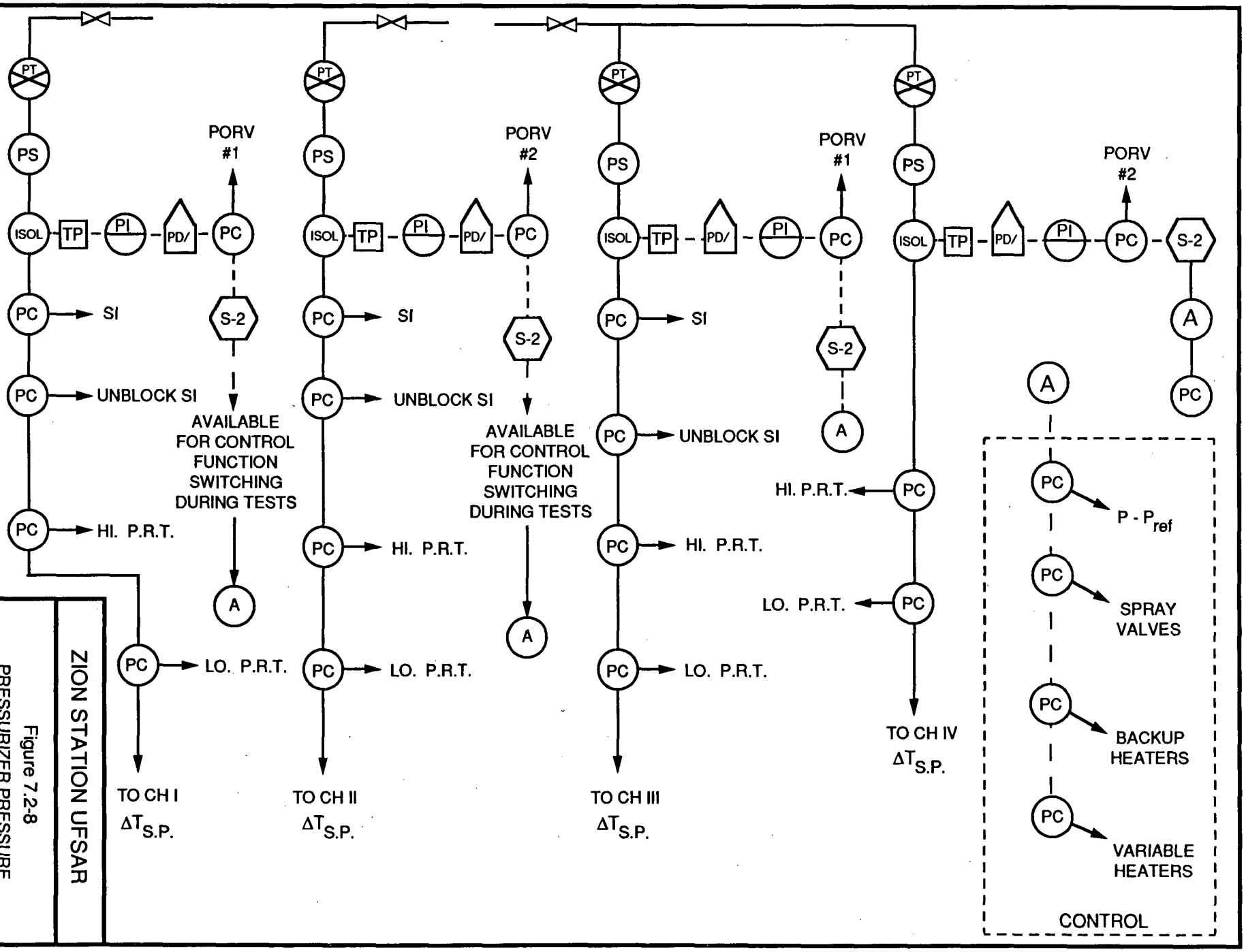

ZION STATION UFSAR

Figure 7.2-8
PRESSURIZER PRESSURE CONTROL AND PROTECTION SYSTEM

JULY 1993

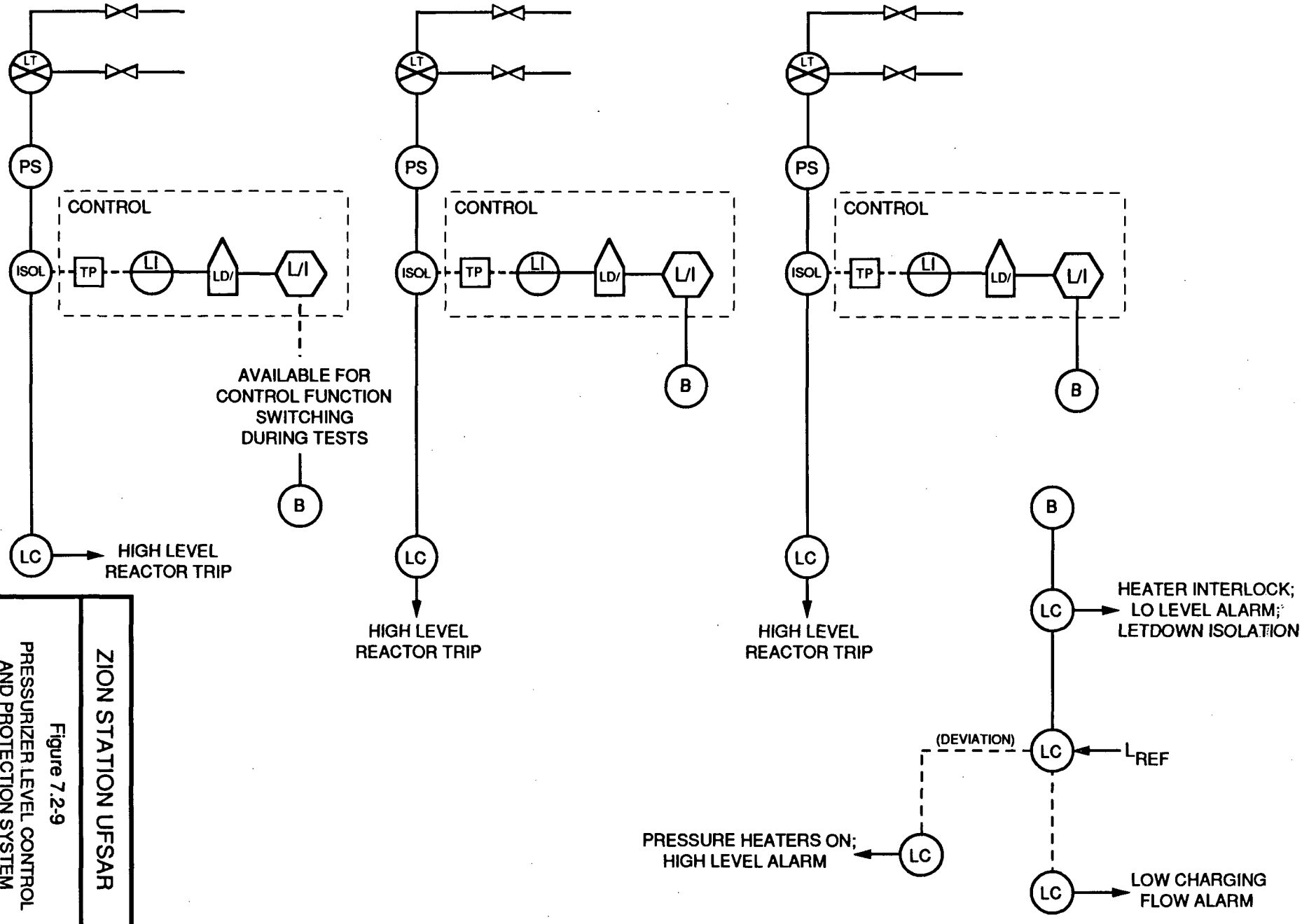

ZION STATION UFSAR

Figure 7.2-9
PRESSURIZER LEVEL CONTROL AND PROTECTION SYSTEM

JULY 1993

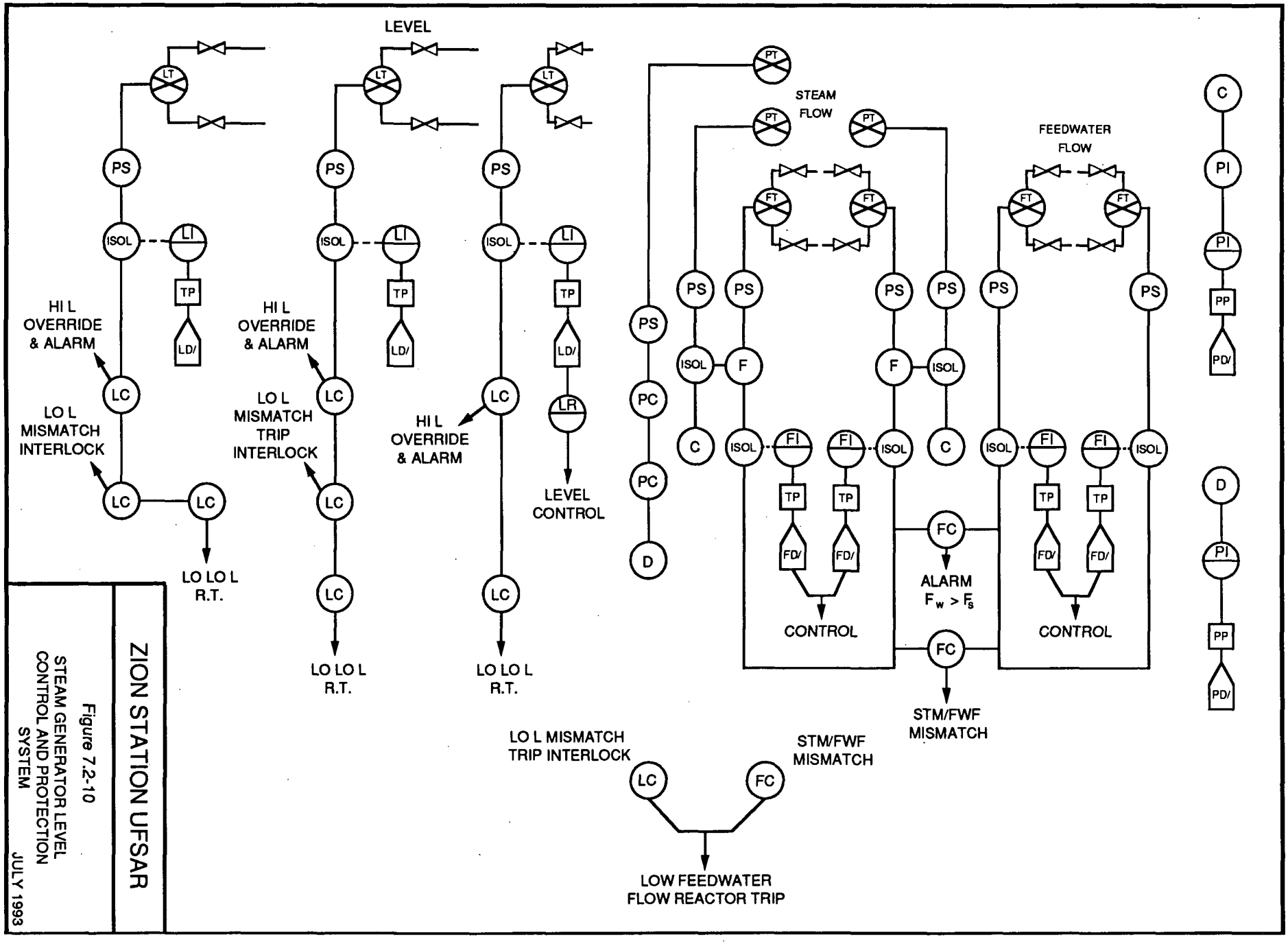

ZION STATION UFSAR

Figure 7.2-10

STEAM GENERATOR LEVEL
CONTROL AND PROTECTION
SYSTEM

JULY 1993

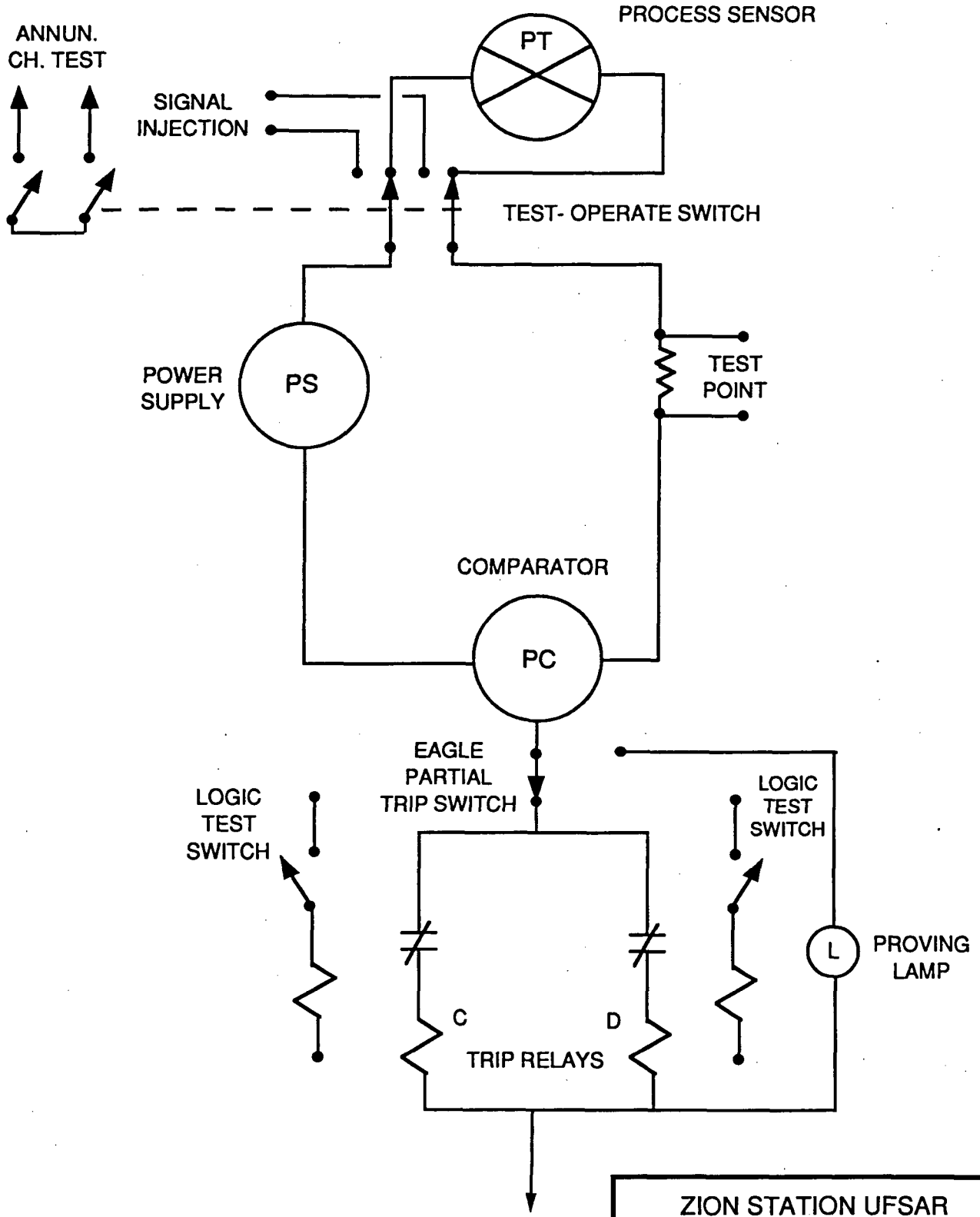

ZION STATION UFSAR

Figure 7.2-11

TYPICAL PROCESS CHANNEL TESTING ARRANGEMENT

JULY 1993

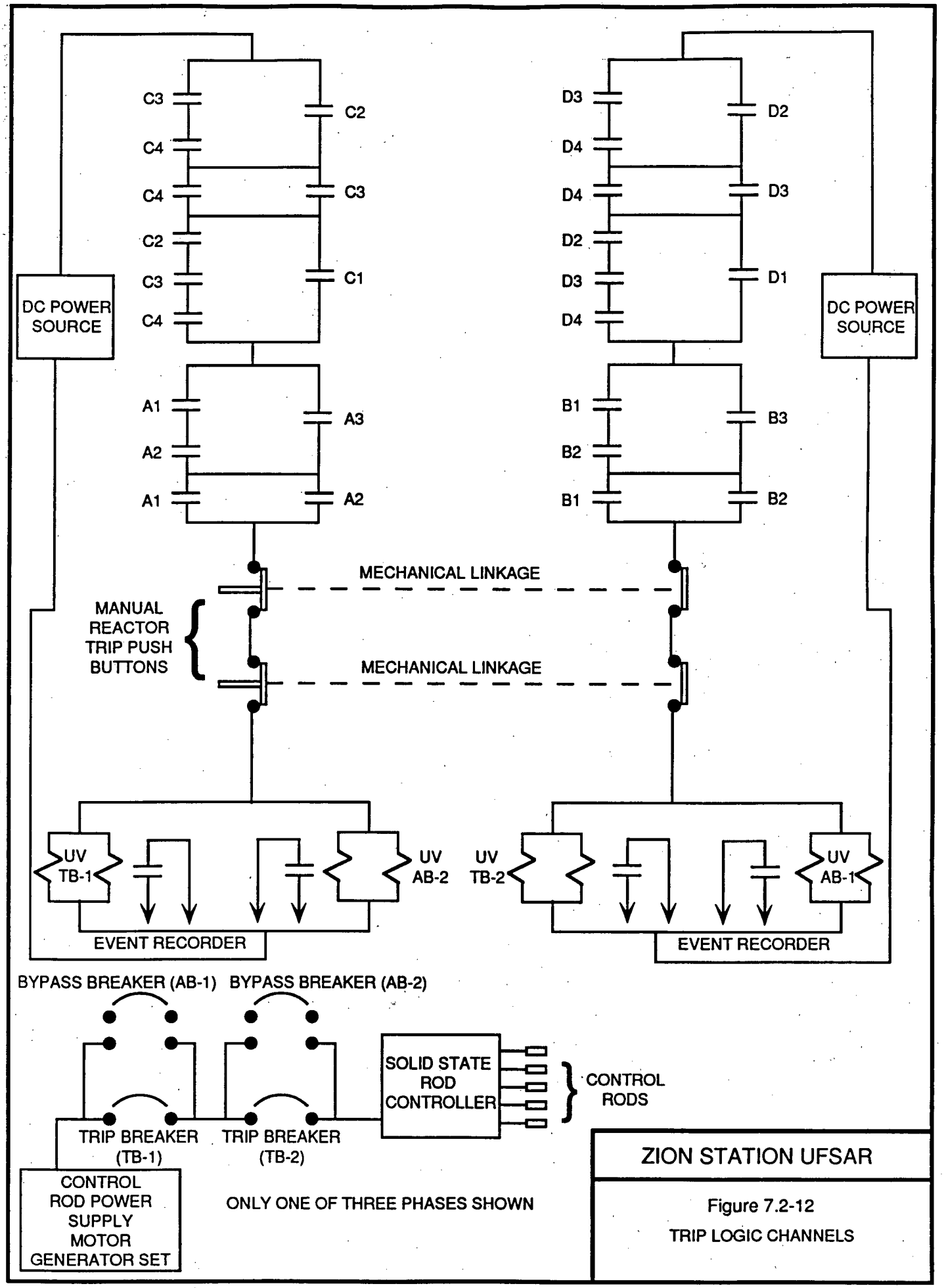

ZION STATION UFSAR

Figure 7.2-12

TRIP LOGIC CHANNELS

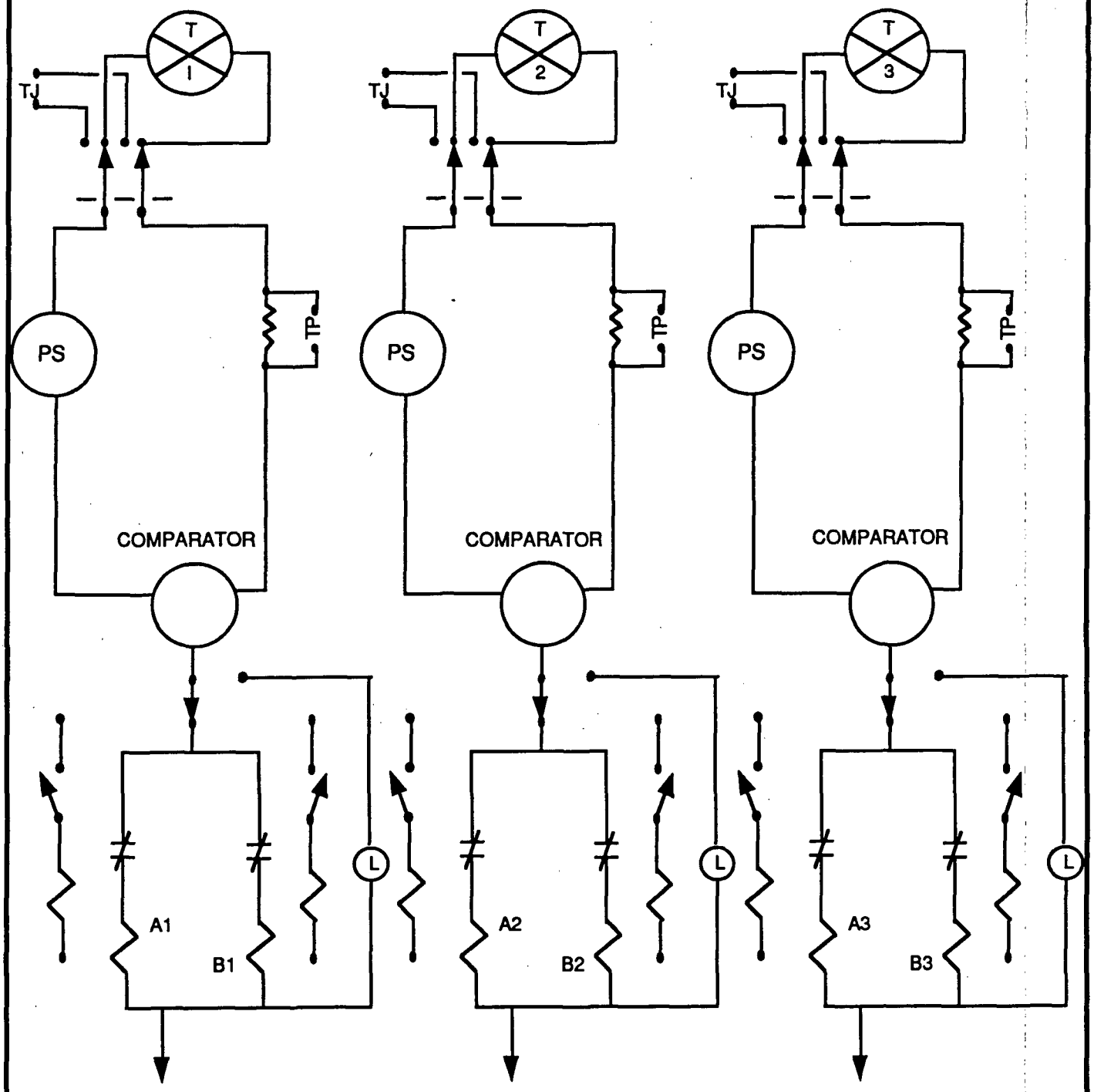

NOTE:
REDUNDANT CHANNELS ARE ISOLATED

ZION STATION UFSAR

Figure 7.2-13
PROCESS CHANNELS

JULY 1993

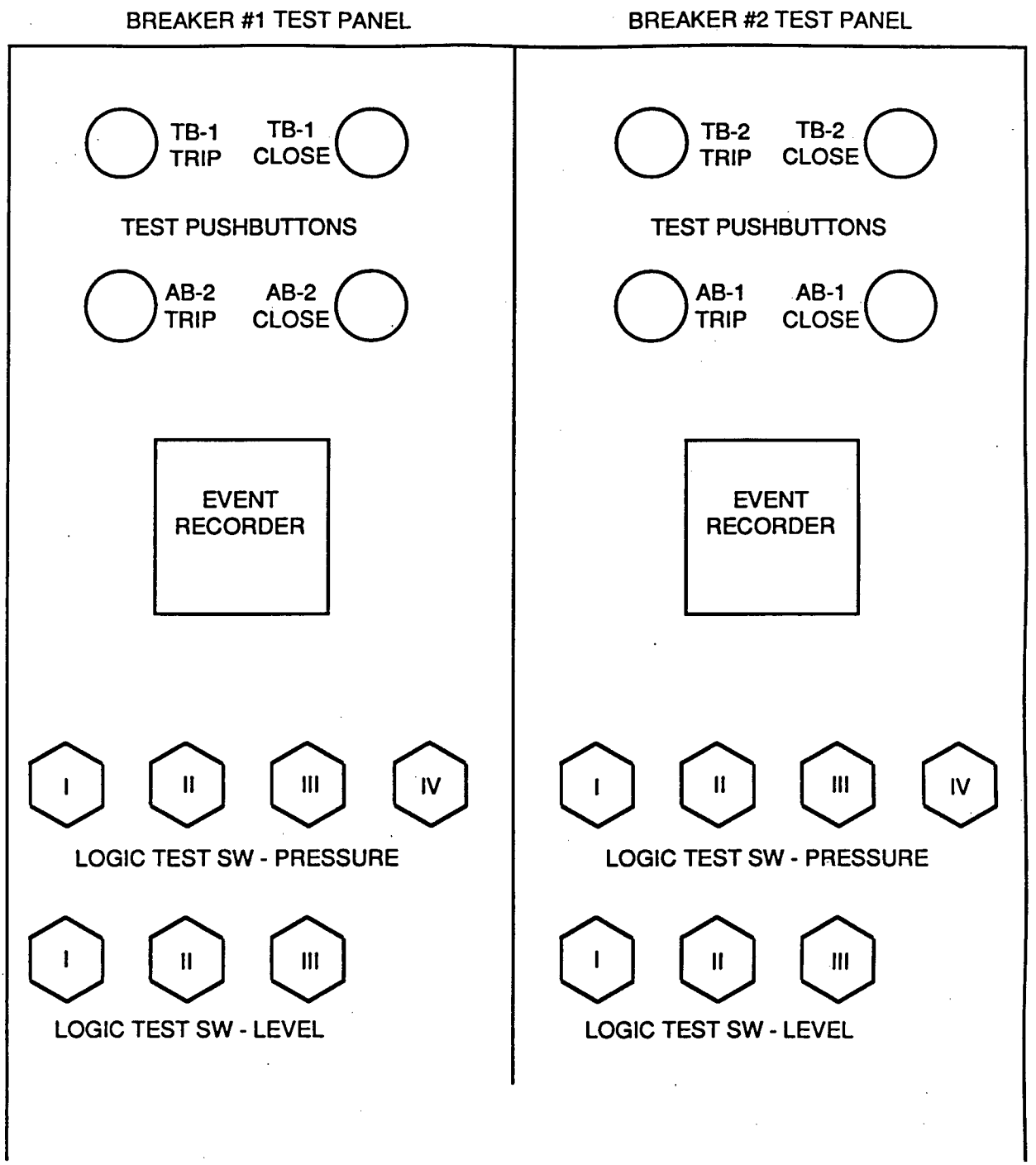

ZION STATION UFSAR

Figure 7.2-14

LOGIC CHANNEL TEST PANELS

7.3 ENGINEERED SAFETY FEATURE SYSTEMS

7.3.1 Description

7.3.1.1 Design Description

The Engineered Safety Feature (ESF) Systems actuation circuitry and hardware layout are generally designed to maintain channel isolation up to and including the comparator operated logic relay similar to that of the Reactor Protection System (RPS) circuitry as discussed in Sections 7.1 and 7.2. As discussed below, the four containment pressure channels 1(2)CS-19, 1(2)CS-20, 1(2)CS-21, and 1(2)CS-22 present exceptions to this philosophy. The general arrangement of this layout is shown in Figures 7.3-1 through 7.3-3.

Channel separation is maintained by providing separate racks for each process protection channel and separate compartments for each logic train. Channel identity is generally lost in the logic wiring required for coincidence matrix makeup. Although channel individuality is lost, two matrix logic trains are developed, ensuring a redundant actuation system.

The arrangement of containment pressure channels 1(2)CS-19, 1(2)CS-20, 1(2)CS-21, and 1(2)CS-22 is as follows. Each of the four containment pressure channels are processed by a separate process protection set. Each containment pressure channel provides two redundant high containment pressure comparator outputs and two redundant high-high containment pressure comparator outputs. For each channel, these comparator outputs are routed, via appropriate divisional control cables, from the process protection racks to 1(2)CB15. In 1(2)CB15, the comparator outputs are isolated from their originating divisional power source by coordinated fuses. At this point, the redundant comparator outputs become logic train specific (i.e., one output supplies a relay in logic train A, the second output supplies a relay in logic train B). The outputs for logic train A are all routed to relay logic cabinet 1(2)CB67 via cables of one division, while the outputs for logic train B are all routed to relay logic cabinet 1(2)CB68 via a second division.

The ESF comparators drive the logic relay coils "C" and "D" as shown in Figure 7.3-1. These logic relay coils are de-energized by their comparators when an abnormal condition exist. Contacts of the C and D relay are so arranged as to develop the logic matrix or combinations of signals required to initiate action. These logic relay coils would normally be energized with their contacts open. This creates an open circuit between the voltage source and master actuating relay. De-energizing either of the two logic relays would energize the master actuating relay. A single exception to this "de-energized to operate" principle is that of initiating containment spray.

The design and sequence of operation for all (x_1/x_2) logic matrices is the same. The master actuating relay (M) is a latch-type relay having two coils, operate (M/O) and reset (M/R), and electric reset. Once the logic matrix is made up, the circuit which energizes the master actuating relay is complete, as described above. An enlarged view, illustrating the master actuating relay (M), may be found in Figure 7.3-2. When the operate coil (M/O) is energized, the M contacts change to their energized positions, which energizes the slave relays and the time delay relay (SRs and TD). The master relay remains latched into this position until the reset coil (M/R) is energized. Following its operation and after a time delay, the master actuating relay may be manually reset by operating the reset switch (see Figure 7.3-2). This time delay ensures completion of the actuating sequence. With the reset coil (M/R) energized, all of the M contacts are returned to their de-energized positions. Once reset action is taken, the master relay operation is blocked by the reset relay R until the reactor trip breakers are reset. When the reactor trip breakers are reset, master relay operation is unblocked and restored to service. Resetting the master relay does not interfere with the operation status of the ESF equipment.

Each channel is supplied with electrical power from one of four independent buses. These buses are normally supplied from the station's AC System through an inverter. Backup power is supplied from the DC System, including the station batteries. Thus, a blackout or momentary loss of station power will not cause any interruption in the power supplied to the instruments.

Indicators and alarms are provided in the Control Room to inform the operator of system status and to guide actions taken during recovery operations.

7.3.1.1.1 Engineered Safety Features and Associated Systems Actuation

Table 7.1-2 lists the ESF and associated systems actuation signals.

7.3.1.1.2 Vital Functions

The ESF Actuation System initiates the following vital functions:

1. Reactor trip on a safety injection (SI) signal, provided the unit has not been tripped by the RPS.

2. Start of the diesel generators on a SI signal.

3. Start of the SI pumps, residual heat removal (RHR) pumps, and charging pumps on a SI signal.

4. Phase A containment isolation on a SI signal.

5. Start of containment cooling fans on a SI signal.

6. Isolation of containment ventilation on a SI signal.

7. Start of the auxiliary feedwater (AFW) pumps on a SI signal.

8. Start of the service water (SW) pumps on a SI signal.

9. Start of the component cooling water (CCW) pumps on a SI signal.

10. Closure of all main steamline isolation and bypass valves on high-high containment pressure signals or high steam flow signals coincident with low-low T_{avg} or low steamline pressure.

11. Closure of the main feedwater control and bypass valves to isolate the main feedwater lines, and trip of the main feedwater pumps on a SI signal.

12. Phase B containment isolation on high-high containment pressure signal.

13. Actuation of the Containment Spray (CS) System on high-high containment pressure coincident with a SI signal.

14. Isolation of the control room outside air intake and transfer to makeup air from the Turbine Room through HEPA and charcoal absorbers on a SI signal.

Table 7.1-2 defines the logic for the ESF actuation system. Also, Technical Specifications defines the exact conditions required to actuate the SI signals.

Protection against a large steamline break is provided by SI actuation, feedwater isolation to prevent excessive cooldown of the primary side, and main steam isolation to prevent uncontrolled blowdown of more than one steam generator. Closure of all steamline isolation valves is initiated by high steam flow in two of four lines coincident with either low T_{avg} in two of four loops or low steam pressure in two of four lines, or by two of four high-high containment pressure signals, or by one of one manual push buttons per loop. The automatic actuation system is designed to meet the requirements for protection systems as described in Sections 7.1.2 and 7.3.1.

7.3.1.1.3 Instrumentation Description

The following instrumentation ensures monitoring of the proper operation of the ESF.

7.3.1.1.3.1 Containment Pressure

Containment pressure is monitored by four taps, each connected to a pressure sensor as shown on Figure 7.3-4. Each sensor provides a signal to its associated comparators, which will trip at preset signal values. These tripped comparators provide input to the protection logic circuits which, in turn, trip the relays to actuate the safeguards systems.

Each pressure loop has two comparators, the first of which is set to trip at the high containment pressure value. When two of the four comparators are tripped, the logic circuits produce an "S-signal" and a "T-signal." The "S-signal" actuates the SI System, while the "T-signal" initiates Phase A containment isolation. These first comparators are normally energized and become de-energized when tripped. A loss of power to two or more channels will produce a trip and initiate SI and containment isolation. However, the loss of one channel will neither cause nor prevent the above actions.

The second set of comparators are set to trip at the high-high containment pressure value. When two of the four comparators are tripped, the logic circuits will initiate steamline isolation, produce a "P-signal", and with a coincident SI signal, initiate CS. The "P-signal" initiates Phase B isolation. The comparators in this second set are normally de-energized and become energized when tripped. A momentary loss of power or a voltage dip will not cause a spurious trip which would actuate the high-high containment signal.

7.3.1.1.3.2 Refueling Water Storage Tank Level

Level instrumentation on the refueling water storage tank (RWST) consists of two channels. Both provide remote indication (on the main control board), a low level alarm, a low-low level alarm, and an analog computer point.

7.3.1.1.3.3 Emergency Core Cooling System Pumps Discharge Pressure

These channels clearly show that the Emergency Core Cooling System (ECCS) pumps are operating. The transmitters are outside the Containment.

7.3.1.1.3.4 Pump Energization

All pump motor power feed breakers indicate they have closed by energizing indicating lights on the control board.

7.3.1.1.3.5 Valve Position

All ESF remote-operated valves have position indication on the control board to show proper positioning of the valves. Air-operated and solenoid-operated valves move in a preferred direction with the loss of air or power. After a loss of power to the motors, motor-operated valves remain in the same position as they were prior to the loss of power.

7.3.1.1.3.6 Recirculation Sump and Containment Sump Instrumentation

7.3.1.1.3.6.1 Recirculation Sump

The recirculation sump instrumentation consists of two level switches designed to operate in a postaccident environment. The transmitter housings are located above any possible flooding level. The indicators are located in the Control Room.

7.3.1.1.3.6.2 Containment Sump

The containment sump water level is monitored by two sets of instrumentation (narrow and wide range). Each set is comprised of two differential pressure systems, which provide indication in the Control Room. The narrow range loops are safety-related, environmentally and seismically qualified, and meet channel redundancy and single failure criteria. The wide range instrument loops meet the same requirements except they are not currently environmentally qualified.

7.3.1.1.3.7 Miscellaneous Local Instrumentation

The following local instrumentation is also available:

1. RHR pumps discharge pressure,
2. RHR exit temperatures,
3. CS test lines total flow, and
4. SI test line pressure and flow.

7.3.1.1.4 Instrumentation Used During Loss-of-Coolant Accident

Instruments which are designed to function following the major loss-of-coolant accident (LOCA) are those which govern the operation of ESF. Pressurizer pressure and level sensors are located inside the Containment because an equivalent signal cannot be obtained from a sensor location more isolated from the reactor.

It should be emphasized that for the large LOCAs, where immediate action is required, the initial suppression of the transient is independent of any detection or actuation signal, because the water level will be restored to the core by the passive accumulator system.

All pumps used for SI and CS are located outside the Containment. The operation of the equipment can be verified by instrumentation that reads in the Control Room. This instrumentation will not be affected by the accident.

Depending upon the magnitude of the LOCA, information relative to the pressure of the Reactor Coolant System (RCS) will be useful to the operator to determine which pumps will be used for recirculation in the event of a small break. The discharge pressure of the charging pumps, as read on instrumentation outside the Containment, will serve this purpose. The containment sump level and RWST instrumentation will also provide information for evaluating the conditions necessary to initiate the recirculation mode of operation. See Section 6.3 for further details.

The RWST level instrumentation provides additional information to determine the relative size of a reactor coolant leak. Core recirculation and CS

recirculation, if necessary, can be manually initiated when the RWST low level alarm is received.

Considerations have been given to all the instrumentation and information that will be necessary for the recovery time following a LOCA. Instrumentation external to the Reactor Containment, such as radioactivity monitoring equipment, will not be affected by this postulated incident and will be available to the operator.

7.3.1.2 Design Bases Information

The ESF instrumentation measures temperatures, pressures, flows, and levels in the RCS, steam system, Reactor Containment and auxiliary systems. It actuates the ESF and monitors their operation. Process variables required on a continuous basis for the startup, operation, and shutdown of the unit are indicated, recorded, and controlled from the Control Room. The quantity and types of process instrumentation provided ensure safe and orderly operation of all systems and processes over the full operating range of the plant. Table 7.3-1 lists the process instrumentation for the RPS and ESF System.

Certain controls and indicators, which require a minimum of operator attention, or are only in use intermittently, are located on local control panels near the equipment to be controlled. Monitoring of the alarms of such control systems is provided in the Control Room. Design criteria for redundancy, separation, and diversity are similar to those used for the protection system, Section 7.1.2.

7.3.2 Analysis

7.3.2.1 System Reliability and Redundancy

Redundant instrumentation has been provided for all inputs to the protection systems and vital control circuits. Where wide process variable ranges and precise control are required, both wide range and narrow range instrumentation are provided. Instrumentation components are selected from products with proven operating reliability. The instrument power to electrical and electronic instrumentation required for safe and reliable operation is supplied from the four instrument buses.

The control and power supply systems for ESF initiation are designed so that no single fault in components, units, channels, or sensors will prevent ESF operation. The timing of initiation and startup of the ESF is such as to provide conservative protection.

The wiring is grouped so that no single fault or failure, including either an open or shorted circuit, will negate ESF operation. Wiring for redundant circuits is protected and routed independently so that damage to any one path will not prevent the protective action. Sensors are piped so

that blockage or failure of any one connection does not prevent ESF operation.

The detailed design incorporates the following characteristics in order to counteract faults resulting in loss of power:

1. All redundant components are powered from separate buses;
2. The 125-Vdc and 120-Vac power buses used are discussed in detail in Section 8.3;
3. The 4160-Vac and 480-Vac Systems are discussed in Section 8.3;
4. The starting and loading of diesel generators are described in Section 8.3;
5. Whenever practical, components of the ESF System assume the position called for under emergency conditions upon a loss of power.

7.3.2.2 Pressurizer Pressure and Level

Credible accident conditions requiring emergency core cooling would involve low pressurizer pressure. The present design for emergency core cooling is accomplished by the SI System actuation from primary system variables. Actuation is initiated by low pressurizer pressure.

Pressurizer pressure is sensed by fast response pressure transmitters. An overall 1 second channel response time is used, which is more than adequate to cover the response characteristics of the tripping channels.

The design of the pressurizer water level instrumentation employs the usual tank level arrangement using differential pressure between an upper and lower tap on a column of water. A reference leg connected to the upper tap is kept full of water by condensation at the top of the leg.

Instrument delays are small in comparison with the computed lag in pressurizer pressure, which lags behind the reactor coolant pressure during blowdown.

A SI block switch is provided to permit the primary system to be depressurized and its water level lowered for maintenance and refueling operations without actuation of the SI System. This manual block switch will be interlocked with pressurizer pressure in such a way that the blocking action will automatically be removed as operating pressure is approached. If two out of three pressure signals are above this preset pressure, blocking action cannot be initiated. The block condition is annunciated in the Control Room.

7.3.2.3 Steam Generator Water Level Control

The successful operation of the ESF involves only actuation control functions, with one exception. This exception is the steam generator level control function using the AFW pumps. This level control system involves

remote manual positioning of feedwater flow control valves in order to maintain proper steam generator water level. Steam generator water level indication and controls are located in the Control Room and at a local control station.

7.3.2.4 Motor and Valve Control

For starting pump and fan motors, the control relays are energized to energize the closing coil on the circuit breaker or the motor starter. When motor starters are used, the starter operating coil will be supplied by power from the same source as the subject motor. When circuit breakers are used for motor control, the circuit breaker "close and trip" coils will be supplied by power from a 125-Vdc battery bus described in Section 8.3.

For valve motor control, the control relay causes the coil on the main contactor for the closing circuit to be energized.

7.3.2.5 Environmental Qualification

Refer to Section 3.11 for a discussion of equipment environmental qualification.

7.3.2.6 Calibration and Test

The testing circuitry and procedures described below allows essentially all the ESF to be tested with the plant in service. With one exception noted below, the ESF circuits provide the capability for completely checking the process signal to the logic cabinets, and from there to the individual pump circuit breakers, valve starters or pilot solenoid valves. The test checks all field cabling actually used in the circuitry, when called upon to operate for an accident condition. For those few devices whose operation could seriously affect plant or equipment operation, the procedure provides for checking from the process signal to the logic rack and from there, low voltage application to output cables, circuit breakers, valve starter coils, or solenoid circuits. The exception noted above involves each of the two CS loops which are checked completely in a two-step procedure involving two slave actuating relays per train interlocked to prevent accidental simultaneous actuation of an entire spray loop.

The procedures require testing at various locations:

1. Testing is accomplished at the process racks. Verification of bistable relay operation is done at the main control room status lights or at the logic racks. Verification of comparator setpoint is done at the process rack.

2. Logic testing through operation of the master low voltage application to slave relays is done at the logic rack test panel.

Testing of all pumps and valves is done at the test panel located in the vicinity of the logic racks in combination with the control room operator. Low voltage application to those devices that cannot be operated is done at the same panel.

Testing of actuated components, including those that can only be partially tested, will be a function of control room operator availability. It is expected to require several shifts to accomplish.

Separate testing alarms, consisting of a visual annunciator, are provided at the main control board which will indicate whenever an ESF Actuation System (up to and including the final actuation device) is on test. One alarm is provided for each ESF System Division 17, 18, and 19, for Unit 1; 27, 28, 29 for Unit 2. In addition, "out of service" alarms of the same type are provided for the following ESF equipment:

1. AFW Pumps,
2. Centrifugal Charging Pumps,
3. CCW Pumps,
4. Containment Cooling Fans,
5. CS Pumps,
6. RHR Pumps,
7. SI Pumps, and
8. SW Pumps.

There are no operating bypasses associated with the ESF testing systems which could render the particular safeguards feature under test inoperable.

The ESF testing program is designed in accordance with the intent of Paragraph 4.12 of IEEE 279, Revision 1.

7.3.2.6.1 Purpose of Testing

The engineered systems are tested to provide assurance that the systems will operate as designed and will be available to function properly in the unlikely event of an accident.

7.3.2.6.2 General Testing Program

1. Prior to initial plant operation, a complete system test was conducted.

2. A complete system test will be conducted during each regularly scheduled refueling outage.

3. During normal operation with the unit in service, essentially all of the ESF components, process, logic and actuation circuitry will be fully tested and the few remaining components will be partially tested.

4. During normal operation, the operability of all testable final actuation devices of the ESF Systems will be tested by manual initiation from the Control Room.

The following sections describe the testing circuitry and procedures for part three of the General Testing Program given above.

7.3.2.6.3 Guidelines

1. The test procedures must not involve the potential for damage to any plant equipment.

2. The test procedures must not expose the plant to an increased potential for accidental tripping.

3. The provisions for on line testing must not complicate the ESF actuation circuits to the extent their reliability is degraded.

7.3.2.6.4 Description of Initiation Circuitry

Since several fluid systems comprise the total ESF Systems, each of which may be initiated by different process conditions and reset independently of each other, separate initiating circuits exist for the following systems or functions in each of the two trains of the ESF actuation circuitry:

1. SI,
2. Containment Isolation Phase A,
3. Containment Isolation Phase B,
4. CS,
5. Containment Ventilation Isolation,
6. Main Steamline Isolation, and
7. Main Feedwater Line Isolation.

The output of the initiation circuits each consists of a master relay which drives slave relays for contact multiplication as required. The logic, master, and slave relays are mounted in cabinets designated Train A and Train B, respectively, for the redundant counterparts. The master and/or slave relay circuits operate various pump circuit breakers, motor-operated valve contactors and solenoid-operated valves.

7.3.2.6.5 Circuit Operation

Initiation of a safeguards function is accomplished by redundant process signals, each of which operates a comparator device, which in turn drives two relays (A and B). One of these logic relays is located in the Train A logic cabinet and the other in Train B. These logic cabinets are provided with separate relay compartments for each of the four channel logic relays. Upon receipt of the required number of comparator inputs for a function (one out of three, two out of three, etc.), the logic

circuitry will cause the master relay and the slave relays for that function to be actuated.

7.3.2.6.6 Process Channel Testing

Process channel testing is identical to that used for reactor trip circuitry (see Figure 7.3-3). Briefly, in the process racks, Eagle partial trip switches, proving lamps and test switches are provided. Administrative controls require that, during comparator testing, the comparator output be placed in a trip condition by its trip switch which connects the proving lamp to the comparator and disconnects, and thus de-energizes (operates), the comparator output relays in Train A and Train B cabinets. This, of necessity, is done on one channel at a time. Status lights in the Main Control Room verify the comparator relays have been de-energized and the comparator outputs are in the trip mode. The only exceptions are the containment pressure loops, which require energizing of two out of four channels to actuate. For testing of these loops, each channel is individually bypassed and the logic reverts to two out of three.

The channel test switch is then operated and a signal is injected. Verification of the comparator trip setting is now confirmed by the proving lamp.

7.3.2.6.7 Logic Testing

After the individual channel testing is complete, the logic matrices are tested from the Train A and Train B logic rack test panels. This step provides overlap between the process and logic portions of the test program. During this test, each of the logic relays are actuated manually in all combinations of trip logic. During logic testing, logic relays remain in their normal positions and can be actuated by a true signal.

Following the logic testing the individual master relays are actuated electrically to test their mechanical operation. Actuation of the master relays during this test will apply low voltage to the slave relay coil circuits to allow continuity checking, but not slave relay actuation.

During this part of the testing, the outputs of the master relays are blocked. The master relay is thereby operated as an integral part of the logic testing. The blocking is achieved with a momentary (spring return) switch and the block electrically maintained until the master relay is reset at the conclusion of the logic test or is overridden by operation of either of the manual actuation switches. The block is annunciated in the Control Room.

There are two annunciators which separately indicate Train A and Train B test operation and positively alert the operator that the redundant systems are in test in violation of administrative procedures so he can take immediate corrective action.

Containment high and high-high pressure systems testing logic relays are interlocked so that if one train is on test, the corresponding portion of the other train cannot be tested. A contact of the test relay blocks actuation of the corresponding test relay on the other train. Test actuation of each train is accomplished by pushbuttons located at separate panels for each train.

7.3.2.6.8 Actuator Testing

At this point, testing of the initiation circuits through operation of the master relay and its contacts to the coils of the slave relays has been accomplished. It is now possible to reset the master relays and proceed to check operation of the slave relays and the devices controlled by their contacts.

For this procedure, controls mounted on a test panel in the logic rack area are provided for each slave relay. These controls are of the type that require two deliberate actions on the part of the operator to actuate a slave relay. By operation of these relays, one at a time through the pushbuttons, all pumps and valves that can be operated on-line are tested. Pumps and valves are assigned to the slave relays such that no undesired effect on plant operation occurs. This procedure minimizes upset to the plant and again assures that overlap in the testing is continuous, since the normal power supply for the slave relays is utilized.

During this last procedure, close communication between the control room operator and the person at the test panel is required. Prior to depressing a slave relay test pushbutton, the control room operator assures plant conditions will permit operation of the equipment that will be actuated by the relay. After the tester has actuated the slave relay, the control room operator observes that all equipment has operated as indicated by appropriate indicating lamps, monitor lamps, and annunciators on the control board. Using a prepared check list, all operations are recorded. The control room operator then resets all valves and pump breakers and prepares for operation of the next slave relay driven equipment.

By means of the procedure outline above, all pumps and valves actuated by engineered safeguard systems initiation circuits are operated by the automatic circuitry, with the following typical list of exceptions:

1. Main Steam Isolation
2. Feedwater Isolation
3. Reactor Coolant Pump essential service isolation
4. Other circuitry which may require blocking, but which is not ESF circuitry, includes electric power system operation and main generator tripping.

Details of the specific list of components which are and are not actuated during testing at power are provided in Table 16.3-3.

7.3.2.6.9 Actuator Blocking and Continuity Test Circuits

The limited number of components that cannot be operated on line are assigned to slave relays separate from those discussed above.

For these components, additional blocking relays are provided, which allow operation of the slave relays but prevent the actuated device from actuating. The circuits provide monitoring of the relay and control circuit operation as well as the cabling and the valve starter or solenoid itself.

TABLE 7.3-1

PROCESS INSTRUMENTATION FOR RPS & ESF ACTUATION

Parameter	Transmitter Sensors	Readout*	Power	Prot/Safeguards Use	Taps
Reactor Coolant Temperature	8 RTDs	CB Meter	Ext	ΔT trips, T_{avg} permissives	1 Each
Pressurizer Pressure	4 Transmitters	CB Meter	Ext	High/Low Pressure Trips, Low Pressure SI Signal	3 (Top Level) One shared
Pressurizer Level	3 ΔP Transmitters	CB Meter	Ext	High Level Trip	3 Pairs
Steam Flow	8 ΔP Transmitters	CB Meter	Ext	Mismatch Trip, SI Signal	1 Pair Each
Feedwater Flow	8 ΔP Transmitters	CB Meter	Ext	Mismatch Trip	1 Pair Each
Steam Pressure	12 Transmitters	CB Meter	Ext	SI Signal	1 Each
Steam Generator Level	12 ΔP Transmitters	CB Meter	Ext	Mismatch Trip, Low-Low Level Trip	1 Pair Each
Reactor Coolant Flow	12 ΔP Transmitters	CB Meter	Ext	Low Flow Trip	1 High Pressure Shared/Loop 1 Low Pressure Each
Containment Pressure	4 Transmitters	CB Meter	Ext	High Pressure SI Signal, High-High Pressure Spray	4
Turbine 1st Stage Pressure	2 Transmitters	CB Meter	Ext	Setpoint Programs & Turbine Power Permissives	1 Each

* CB is Control Board

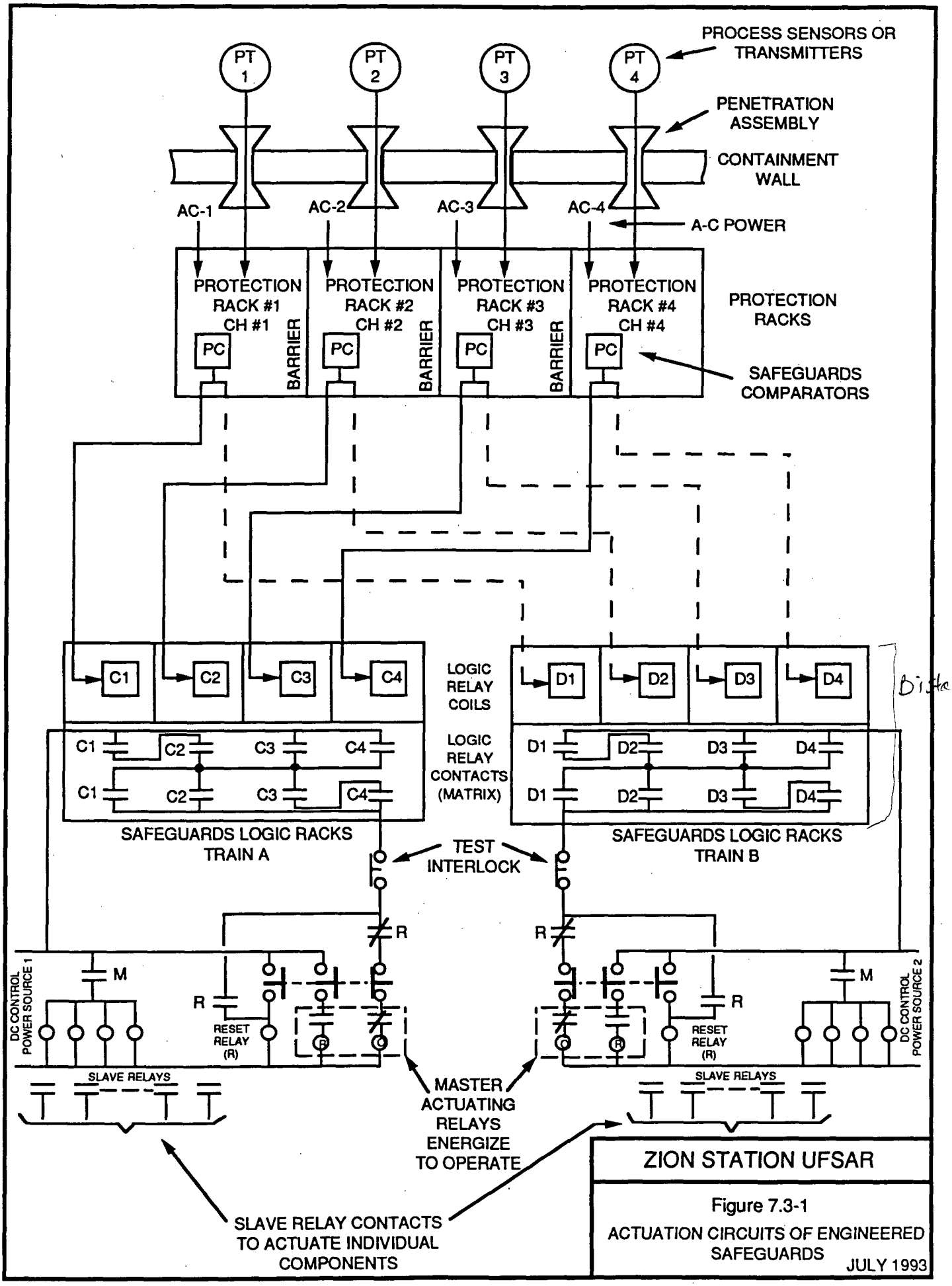

ZION STATION UFSAR

Figure 7.3-1

ACTUATION CIRCUITS OF ENGINEERED SAFEGUARDS

JULY 1993

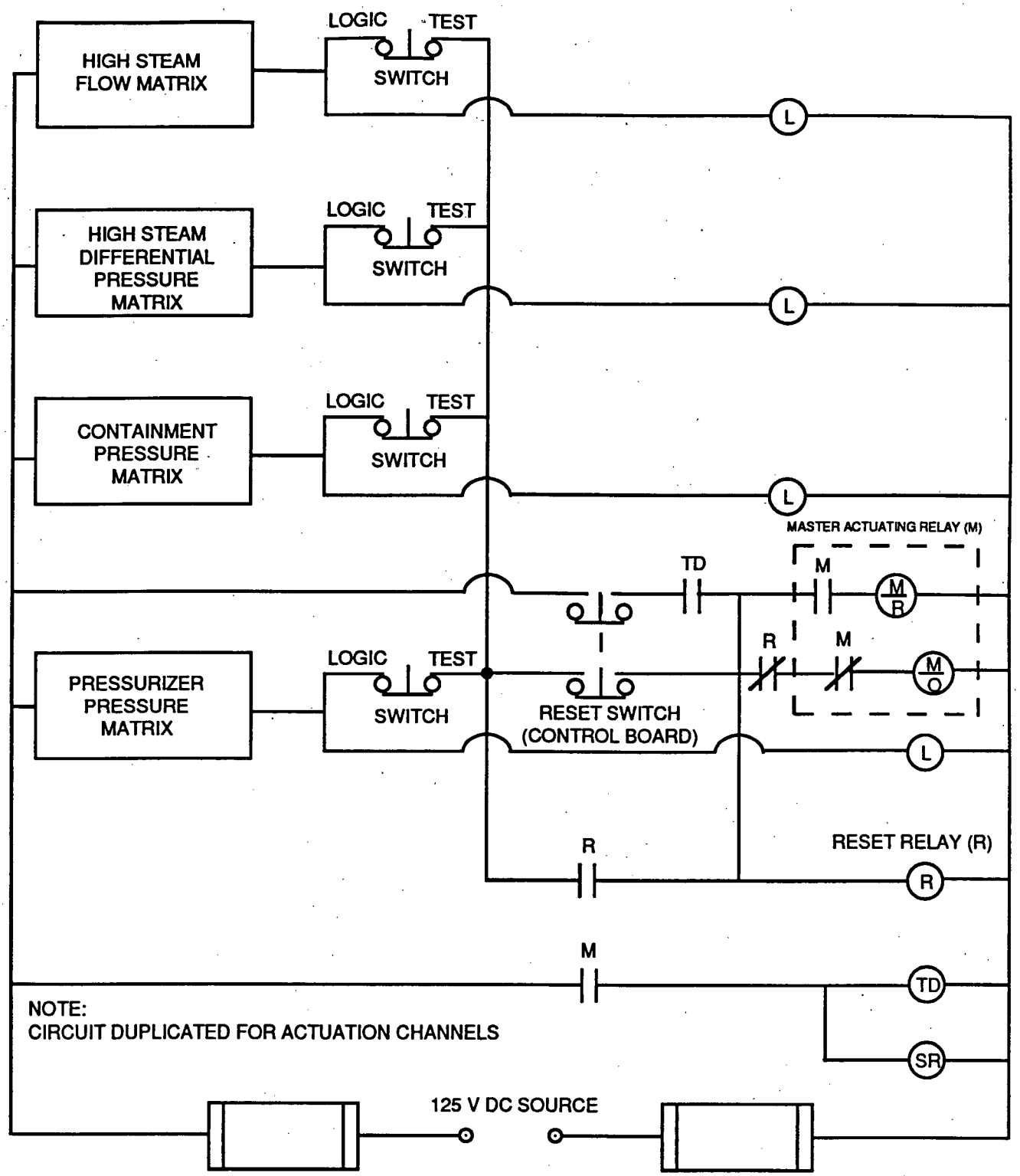

M/O, M/R: RESET COIL, OPERATE COIL RESPECTIVELY, WITH ACCOMPANYING M CONTACTS
R: RESET RELAY WITH ACCOMPANYING R CONTACTS
TD: TIME DELAY RELAY WITH ACCOMPANYING TD CONTACT

ZION STATION UFSAR

Figure 7.3-2
SIMPLIFIED DIAGRAM FOR OVERALL LOGIC RELAY TEST SCHEME

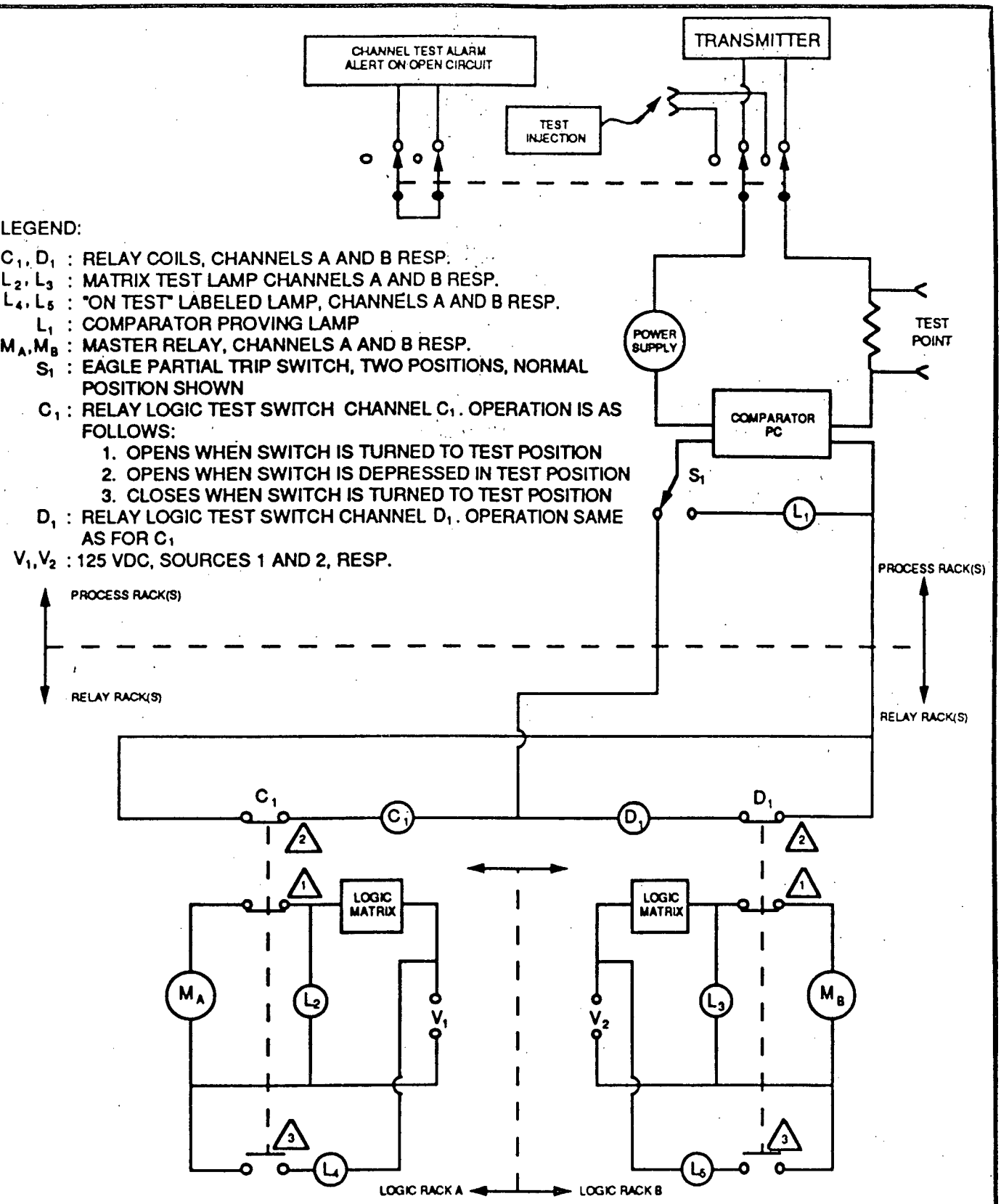

ZION STATION UFSAR

Figure 7.3-3
SIMPLIFIED DIAGRAM RELAY LOGIC CHANNEL TESTING

JULY 1993

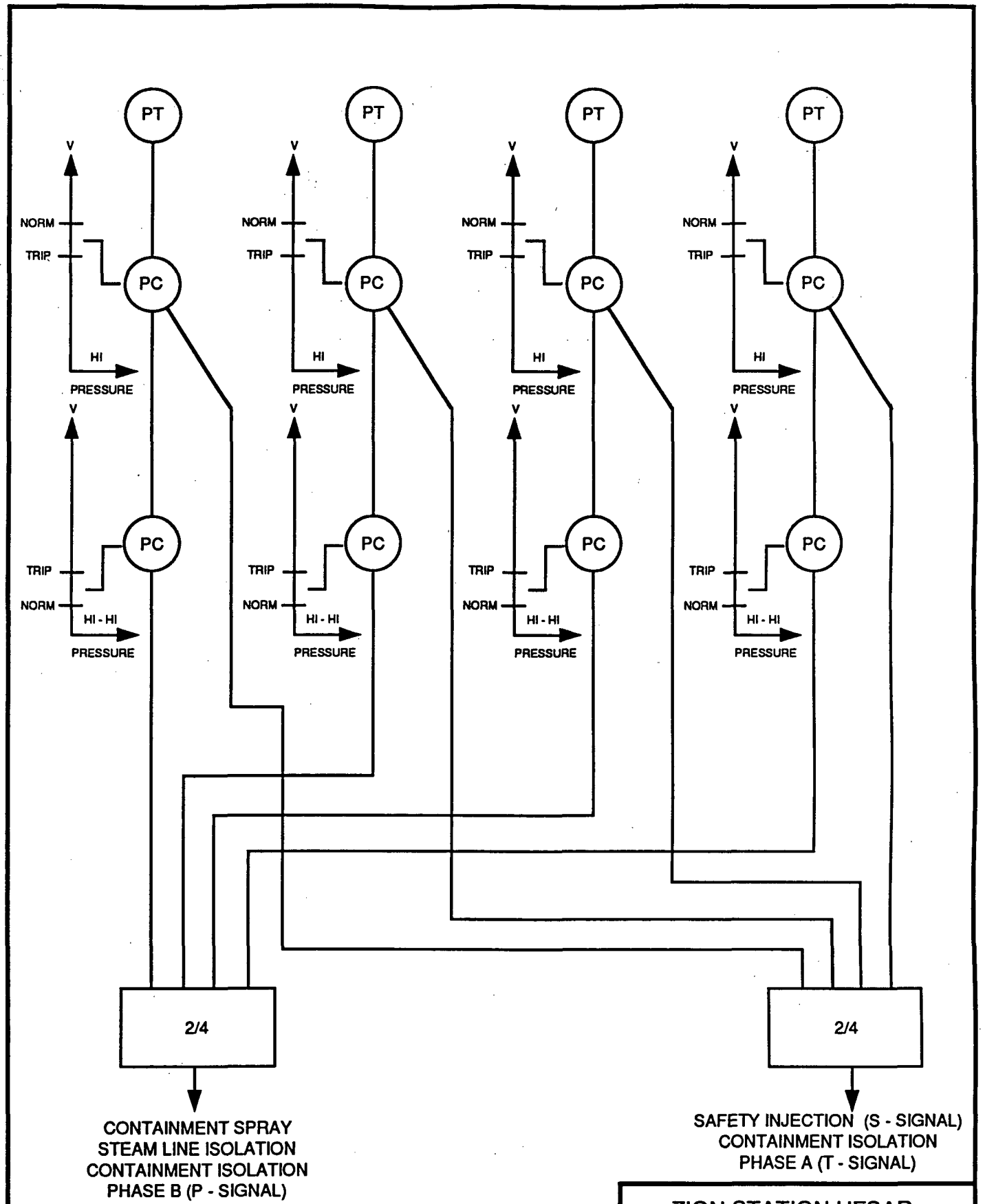

ZION STATION UFSAR

Figure 7.3-4

CONTAINMENT PRESSURE INSTRUMENTATION

7.4 SYSTEMS REQUIRED FOR SAFE SHUTDOWN

The systems required for safe shutdown are stated in the Fire Protection Report.

- Figure 7.4-1 was Intentionally Deleted -

- Figure 7.4-2 was Intentionally Deleted -

- Figure 7.4-3 was Intentionally Deleted -

- Figure 7.4-4 was Intentionally Deleted -

7.5 SAFETY-RELATED DISPLAY INSTRUMENTATION

7.5.1 Description

This section describes the instrumentation which provides information to the operator to enable performance of required safety and power generation functions. The instrumentation described below, which corresponds to the Regulatory Guide 1.97 compliance letter (see Reference 1), will be available to the operator during normal, transient, or accident conditions to monitor plant conditions. Specific systems and instrumentation required for safe shutdown are discussed in Volume 1 of the Fire Protection Report.

Some of the safety-related indications discussed below will also provide inputs to and be displayed on the nonsafety-related Safety Parameter Display System (SPDS). The SPDS is used as an aid to the operators in determining the status of the plant during abnormal or emergency conditions. In addition to SPDS, indicators, meters, recorders, annunciators, and computers are, in general, considered nonsafety-related instrumentation.

7.5.1.1 Reactor Coolant System Instrumentation

7.5.1.1.1 Reactor Coolant System Wide Range Temperature Instrumentation

Reactor Coolant System (RCS) temperature is displayed on the Reactor Control Panel, 1(2)CB06. Four nonsafety-related two-pen wide range RCS temperature recorders are provided. One pen records hot leg temperature; the second pen records cold leg temperature. Each recorder corresponds to one of the four RCS loops. In addition, two nonsafety-related wide range RCS hot leg and one nonsafety-related cold leg temperature indications are provided on the Remote Shutdown Panel, 1(2)LP60, and the four cold leg temperatures are on the SPDS screen.

7.5.1.1.2 Core Exit Temperature/Subcooling Margin Monitor System

Chromel-alumel thermocouples are threaded into guide tubes that penetrate the reactor vessel head through seal assemblies. The Unit 1 design calls for 65 thermocouples positioned to measure fuel assembly coolant outlet temperature. The Unit 2 design calls for 62 thermocouples positioned to measure fuel assembly coolant outlet temperature and three thermocouples positioned to monitor the reactor upper head temperature. The high pressure seals for the thermocouples and flux thimbles are shown on Figures 7.5-1 through 7.5-4. The thermocouples are enclosed in stainless steel sheaths within the guide tubes to facilitate replacement when necessary.

The average of the ten hottest thermocouples is displayed in the Main Control Room on the Core Exit Thermocouple/Subcooling Display located on the Incore Thermocouple Panel, 1(2)CB116. The average of the ten hottest thermocouples are also displayed on a main control board meter and the SPDS

screen, after being supplied to the plant computer. Individual thermocouple readings are also available by manual point selection. Information from the incore instrumentation is available even if the computer is not in service. The support of the thermocouple guide tubes in the upper core support assembly is described in Chapter 4.

Degrees of subcooling is also provided in the Main Control Room. Subcooling displayed on the Core Exit Thermocouple/Subcooling Display is determined using the inputs provided by the incore thermocouples and the RCS wide range pressure channels. The RCS pressure is used to determine the saturation temperature of the RCS. Saturation temperature minus actual temperature, determined using the incore thermocouples, equals the subcooling margin. Degrees of subcooling is also determined by the plant computer using the incore thermocouple input and either pressurizer narrow range pressure or RCS wide range pressure depending on the pressure. This value of subcooling is displayed on a main control board meter and the SPDS screen.

7.5.1.1.3 Reactor Coolant System Pressure

RCS wide range pressure indication is displayed on the Reactor Control Panel by two, nonsafety-related, 0 to 3000 psig pen recorders. Each pen is fed by a separate channel. Also provided is a nonsafety-related, 0 to 1800 psig pressure indicator on the reactor control panel and a nonsafety-related, 0 to 600 psig pressure indicator on the Chemical and Volume Control Panel, 1(2)CB07. Each of these indicators are fed from one of the instruments feeding the wide range recorder pens discussed above. RCS pressure is also displayed on the Remote Shutdown Panel, 1(2)LP60, and on the SPDS screen with input provided by either the pressurizer pressure channels or the wide range RCS pressure discussed above.

7.5.1.1.4 Pressurizer Level

Pressurizer level is provided by three nonsafety-related level indicators on the Reactor Control Panel. Each indicator is fed by a separate level transmitter. A nonsafety-related pressurizer level recorder is also available. A switch is used to select one of the three level channels for recording.

Pressurizer level is also displayed on the SPDS screen and on the Remote Shutdown Panel, 1(2)LP60.

7.5.1.1.5 Reactor Coolant Level in the Vessel

Vessel level indication is provided by the Reactor Vessel Level Indication System (RVLIS). RVLIS derives reactor vessel level from differential pressure measurements taken on the reactor vessel. Inputs to control room indication are supplied by two wide range level transmitters and two narrow range level transmitters installed in separate instrument loops. These

loops are connected to one tap on the top head of the reactor vessel and a second tap off an incore thimble guide tube. This gives indication from the bottom to top of the vessel.

Control room indication includes two narrow range level indicators, two wide range level indicators, and a two-pen level recorder, all located on the Reactor Control Panel, 1(2)CB06. Each narrow range and wide range indicator is fed from one of their respective level transmitters discussed above. The narrow range transmitters are used to monitor reactor vessel level while the reactor coolant pumps are off. The wide range transmitters monitor level while any of the reactor coolant pumps are running.

RVLIS is also used as an input to SPDS and is displayed on the SPDS screen.

7.5.1.2 Steam Generator Instrumentation

7.5.1.2.1 Steam Generator Level

Steam generator level indication is provided by nonsafety-related narrow range and wide range instruments on the Steam Generator and Feedwater Panel, 1(2)CB05, and on the Engineered Safeguards Panel, 1(2)CB08.

The taps for the wide range transmitters are located approximately 18 inches above the tube sheet, and the upper tap is located slightly above the lower portion of the lower cyclone separator. Each wide range level indicator located on 1(2)CB08 is scaled 0% to 100%, which corresponds to a measurement of 0 to 575 inches of water column. Steam generator wide range level indication is also provided on SPDS, on the Remote Shutdown Panel, 1(2)LP60, and on two two-pen recorders. These nonsafety-related recorders are found on the Steam Generator and Feedwater Panel, 1(2)CB05. Each pen corresponds to one level transmitter. Steam generators A and B are on one recorder; steam generators C and D are on the second recorder.

Three narrow range transmitters per steam generator supply indication to three nonsafety-related level indicators located on the Steam Generator and Feedwater Panel, 1(2)CB05. One of the narrow range transmitters also supplies input to a level indicator located on the Engineered Safeguards Panel, 1(2)CB08. These indicators also provide 0% to 100% indication, but on a much narrower scale. The lower tap is located just below the feedwater ring and the upper tap is located slightly above the lower portion of the lower cyclone separator.

7.5.1.2.2 Steam Generator Pressure

Three nonsafety-related pressure indicators per steam generator are displayed on the Steam Generator and Feedwater Panel, 1(2)CB05, on SPDS, and on the Remote Shutdown Panel, 1(2)LP60. The control board pressure indicators are each fed by a separate steam generator pressure transmitter.

7.5.1.2.3 Main Steam Flow

Also available to the operator to evaluate steam generator performance are two nonsafety-related steam flow indicators per steam generator and one nonsafety-related flow recorder per steam generator located on the Steam Generator and Feedwater Panel, 1(2)CB05. Two transmitters per steam generator supply the provided indication. These transmitters are located upstream of the steam generator safety valves and the atmospheric relief valves; therefore, flow indication will be provided should a safety or relief valve open.

7.5.1.3 Containment Indications

7.5.1.3.1 Containment Pressure

Containment wide range pressure is provided by two pressure transmitters. Indication is supplied by two nonsafety-related pressure indicators, each fed by a separate transmitter, located on Engineered Safeguards Panel 1(2)CB10. A nonsafety-related recorder, receiving input from one transmitter, is provided on the Miscellaneous Equipment Panel 1(2)CB16.

7.5.1.3.2 Containment Water Level Indication

Containment recirculation sump level is provided by light indication in ascending order as sump level is increased. Two separate nonsafety-related level indicators are fed by four nonsafety-related level transmitters. A minimum level of 111 inches is required in order to supply the necessary net positive suction head to the Residual Heat Removal (RHR) System pumps during recirculation phase.

Other indications provided to monitor containment water level include two narrow range and two wide range nonsafety-related indications displayed on the Engineered Safeguards Panel 1(2)CB08. The narrow range sump level is given in inches, whereas the wide range level is read in feet. Each indicator is fed by a separate level transmitter.

Three nonsafety-related indicators for containment atmosphere temperature and two nonsafety-related recorders for the recirculation sump water temperature are provided on the Engineered Safeguards Panels, 1(2)CB12 and 1(2)CB08, respectively. These indications will aid the operator in determining the adequacy of containment cooling. Three nonsafety-related temperature sensors provide the input to the containment atmosphere indicators. Two nonsafety-related temperature sensors at the discharge of the RHR pumps provide the recirculation sump water temperature indication input.

7.5.1.3.3 Containment Hydrogen Concentration

Containment hydrogen concentration can be found on Engineered Safeguards Panel, 1(2)CB09. Nonsafety-related indication is provided in percent hydrogen. This enables the operator to detect possible explosive concentrations of hydrogen within Containment following an accident.

7.5.1.4 Reactor Shutdown Indication

Information is displayed in the Control Room so that the operator can verify the reactor has been shut down.

7.5.1.4.1 Control Rod Position

A nonsafety-related rod position indicator panel is provided on the Reactor Control Panel, 1(2)CB06. This indication shows the control rods are fully inserted by illuminating a rod bottom light when the rod is less than 20 steps off the bottom. Input is supplied by individual rod linear position transmitters. Control rod position provides backup to the neutron flux indications. Control rod position indication is discussed in detail in Section 7.7.

7.5.1.4.2 Neutron Flux

Neutron flux indication is provided by instrumentation covering three ranges, with overlap of at least one decade between ranges. Indication includes two source range, two intermediate range, and four power range nonsafety-related indicators. A nonsafety-related recorder is also available to monitor and record neutron flux activity. All indications are displayed on the Reactor Control Panel, 1(2)CB06. A second set of indications is provided on the Nuclear Instrument Panels, 1(2)CB22, 1(2)CB23, 1(2)CB24, and 1(2)CB25. The source and intermediate range indication at 1(2)CB22 and 1(2)CB23 is safety-related. The source range or power range is also displayed on the SPDS screen.

7.5.1.4.3 Reactor Coolant System Boron Concentration

The RCS can be sampled from various points to determine soluble boron concentration using equipment provided in the Hot Lab. Boron concentration can also help verify that the reactor is shutdown and is being maintained shutdown.

7.5.1.5 Containment Isolation

The containment isolation valve position indications meet the requirements necessary to assure containment isolation has been accomplished, with some clarifications. The hydrogen analyzer valves SOV-PR25A, SOV-PR26A, SOV-PR25B, SOV-PR26B, SOV-PR25C, SOV-PR26C, SOV-PR25D, and SOV-PR26D have EQ position indication, but the two valves on each pipe line do not have independent power supplies. Therefore, to ensure positive valve position indication for R.G. 1.97, the SOV-PR25A, SOV-PR25B, SOV-PR25C, and SOV-PR25D are normally administratively controlled closed and de-energized.

AOV-SI8888 has positive valve position indication for R.G. 1.97 by administratively controlling the valve normally closed and air-isolated. AOV-SI8888 is not EQ.

MOV-RH8701 has positive valve position indication for R.G. 1.97 by administratively controlling the valve normally closed and de-energized. MOV-RH8701 is not EQ.

MOV-SW0001, MOV-SW0002, MOV-SW0003, MOV-SW0004, MOV-SW0005, and MOV-SW0006 only have local indication and control. These SW valves are not EQ, but are accessible for local control during accident events. MOV-SW0001 and MOV-SW0002 are normally open, but get a signal to open during an accident event. Except for the open signal on these two valves, these six SW valves are post-accident service valves which do not automatically change position during or following an accident. These six SW valves are only rarely re-positioned. Any change to the normal lineup of these SW valves are administratively controlled.

7.5.1.6 Core Cooling Indication

Operation of the Emergency Core Cooling System (ECCS), secondary heat removal systems, and miscellaneous other components will help ensure adequate core cooling. Operation of these systems and components may be verified by observing the following indications located in the Main Control Room.

7.5.1.6.1 Injection Systems

Flow indication is provided for each of the three injection systems; centrifugal charging pumps, Safety Injection (SI) pumps, and RHR pumps. Charging pump flow through the injection header is provided by a nonsafety-related flow indicator on the Chemical and Volume Control Panel, 1(2)CB07, with input from a nonsafety-related flow transmitter located on the injection header. Two nonsafety-related flow indicators are provided for the SI pumps on Engineered Safeguards Panel, 1(2)CB12. Each receives a separate input from its respective nonsafety-related transmitter located at the discharge of the SI pump.

RHR flow is provided by four nonsafety-related flow indicators on the Engineered Safeguards Panel, 1(2)CB08. The flow indicators receive their input from two nonsafety-related transmitters at the outlet of each RHR heat exchanger. RHR heat exchanger outlet temperature indication is also provided by two nonsafety-related recorders. Each recorder is fed by a separate sensor located at the outlet of each heat exchanger.

During the injection phase, the pumps for these three injection systems are provided suction from the refueling water storage tank (RWST). Therefore, it is important that the operators are provided with level indication for the RWST. Two nonsafety-related level indicators, each with an input from a separate nonsafety-related transmitter, are displayed on the Engineered Safeguard Panel, 1(2)CB08. This indication will ensure that net positive suction head for ECCS pumps is not lost and operator actions, such as swapping to ECCS recirculation, are done at the correct time.

7.5.1.6.2 Accumulator Instrumentation

The passive accumulators are important components during the injection phase of ECCS operation. Three nonsafety-related indicators are provided in the Control Room which enable the operator to verify the accumulators have discharged or can discharge as required. Each accumulator, one per loop, is provided with two nonsafety-related level indicators, and two nonsafety-related pressure indicators on the Engineered Safeguards Panel, 1(2)CB12. Each indicator is fed by a separate transmitter. Administrative control of the motor-operated isolation valves at the discharge of the accumulators will ensure proper operation. These valves are required to be in the open position when the injection systems are required to be operable. During plant heatup, these valves are de-energized in the open

position. This will ensure that the accumulators will inject borated water into the core without any operator intervention or automatic signals.

7.5.1.6.3 Primary Coolant Systems

Several control room indications concerning the RCS are provided. These indications are used to aid the operator in making appropriate decisions in order to mitigate the consequences of an accident. The pressurizer safety valves, power-operated relief valves (PORVs), and PORV block valves are provided with OPEN-CLOSE indication. Both PORVs and PORV block valves are provided with RED-GREEN indicating lights at their respective valve operating switch. Valve limit switches supply the input to these lights. Each of the three pressurizer safety valves is provided with primary and backup indication. The primary indication consists of a nonsafety-related temperature sensor downstream of each pressurizer safety with an associated temperature indicator on the Reactor Control Panel, 1(2)CB06. The backup indication consists of three nonsafety-related annunciators which alarm on high temperature downstream of the pressurizer safety valves. Also included as backup instrumentation are miscellaneous pressurizer relief tank (PRT) indications. The PRT is provided with level, temperature, and pressure indication on the reactor control panel. Each process is provided with one nonsafety-related indication; each indication is supplied by one transmitter. Because these instruments give backup information only, they are not required to function during the design basis accident.

7.5.1.6.4 Auxiliary Feedwater System

Four nonsafety-related flow indicators, one per steam generator, are displayed on the Engineered Safeguards Panel, 1(2)CB08. One transmitter feeds each of the flow indicators; one channel per steam generator. The instrument channels have redundant power supplies so that, with loss of one power supply, two channels of indication remain available. To remove RCS residual heat, auxiliary feedwater flow is required to only two of the four steam generators.

Because the nonsafety-related condensate storage tank (CST) is the preferred source of water for the auxiliary feedwater pumps, two nonsafety-related level indications are provided for the CST on the Condensate Panel, 1(2)CB04. The safety-related backup to the CST is the Service Water (SW) System.

7.5.1.7 Containment Cooling

Two systems, Containment Spray (CS) System and the reactor containment fan coolers, help provide the necessary containment cooling requirements. ON-OFF indicating lights and motor current ammeters, located on Engineered Safeguards Panel 1(2)CB08, provide the operator with the information necessary to determine reactor containment fan cooler status. Three CS flow transmitters feed three nonsafety-related flow indicators on

Engineered Safeguards Panel 1(2)CB09. These flow indicators provide the operator with information necessary to determine sufficient flow is being provided to the CS spray rings in Containment.

These indications, along with containment atmosphere and sump temperature indications (see Section 7.5.1.3), enable the operator to determine the adequacy of containment heat removal.

7.5.1.8 Chemical and Volume Control System

Charging and letdown indications are not key variables for accident monitoring because normal charging and letdown flow paths are isolated following a SI signal. However, certain indications are provided to the operator to give an overall system status.

Both charging flow and letdown flow are displayed on the Chemical and Volume Control Panel, 1(2)CB07. Each nonsafety-related flow indicator is fed from one nonsafety-related flow transmitter. Two nonsafety-related volume control tank level indications are also provided to the operator, located on the Chemical and Volume Control Panel and on the Remote Shutdown Panel-Balance of Plant, 1(2)LP60. The volume control tank level indication is not a key variable for accident monitoring because the injection pumps are provided suction from RWST following a SI signal.

7.5.1.9 Component Cooling Water System

The Component Cooling Water (CCW) System provides the necessary cooling to engineered safety feature (ESF) equipment required during accidents (e.g., RHR heat exchangers, charging pump coolers, SI pump coolers, and RHR pump coolers). Two nonsafety-related CCW temperature indicators and two nonsafety-related CCW flow indicators are located on the Engineered Safeguards Panel, 1(2)CB08. These indicators provide the operator with the information necessary to determine system status.

7.5.1.10 Control Room Ventilation System

No direct indication of control room ventilation emergency damper position is available in the Control Room. The dampers fail in the safeguards (emergency) position. Verification of damper position is by booster fan run status and indication of flow across the booster fan filter. These indications are available to the operator in the Control Room.

7.5.1.11 Power Supplies

Volt meters, ammeters, and indicating lights for engineered safety feature 4160-Vac and 480-Vac buses are provided in the Main Control Room on the Diesel Generator Panels 1(2)CB70, 71, and 72. These instruments provide the operator with the required indications to determine the status of the ESF power supplies.

7.5.1.12 Radiation Monitoring

7.5.1.12.1 Effluent Monitoring

Each unit has a stack effluent radiation monitoring system. The vent stack system particulate, iodine, and noble gas (SPING) monitor provides monitoring of all releases via the plant vent stack. If a containment breach is suspected due to an increase in vent stack radiation levels, local monitoring and area monitors (discussed below) can be used to identify the location of the breach. A separate monitor and control room indication provides the operator with information to verify whether or not the release is from the containment purge exhaust.

A method is available for calculation of noble gases released via the steam generator atmospheric relief or safety valves using the steam generator pressure point history and steamline radiation monitor point history. This information, along with the duration of release, is used to calculate the total quantity of noble gases released.

7.5.1.12.2 Area Radiation Monitoring

Several area monitors provide exposure rates throughout the plant, including Containment. Area monitors provide control room indication on the Radiation Monitoring Display System (RMDS) and on the Radiation Monitoring System Control Console, 1(2)CB73, concerning radiation levels. These monitors are sufficient to detect significant releases and determine if the areas are accessible. The containment area monitor provides high range indication of containment radiation levels on the RMDS, the Radiation Monitoring System Control Console, and on the SPDS screen. All area monitors can be used for detection of significant releases, release assessment, and long-term surveillance. The containment area monitor indication is also used for emergency plan activation.

7.5.2 Analysis

Consistent with the original design requirements for Zion Station, which went operational in the early seventies, most control board indication is not designated "safety-related" or is not presently designated Seismic Class I. The instrumentation is of high quality and has proven to be reliable based on industry and Zion operating history. The original seismic testing performed on instrumentation is described in Section 3.10.

Also consistent with the original design, physical separation between redundant divisions of instrument cable is not strictly maintained within the control boards. This lack of separation is not considered to significantly reduce the reliability of the instrumentation because typical missile hazards are not present within the control boards. The nonsafety-related instrument cable and instruments are isolated from safety-related circuitry.

The display instrumentation provides adequate information to allow an operator to make correct decisions for manual control actions under normal, abnormal, and accident conditions. The design provides the operator with accessible information and control of the various plant operational parameters.

A SPDS is also provided to serve as an active part of the operator/plant interface. Failure of the SPDS does not degrade the quantity or quality of necessary information presented by control room indications. Some information is displayed and/or analyzed by the nonsafety class SPDS. In cases where information is shared or used with nonsafety-related equipment, the SPDS is isolated from the safety-related circuitry so that an SPDS failure cannot affect the circuit.

The following instrumentation provides information to the operator after a design basis accident as discussed in Section 7.5.1. This section presents information that explains why these indications will be available following the accident.

7.5.2.1 Reactor Coolant System Instrumentation

7.5.2.1.1 Reactor Coolant System Wide Range Temperature Instrumentation

The hot leg and cold leg wide range RCS temperature instruments which feed the indications discussed in Section 7.5.1.1.1 are redundant, seismically qualified, and qualified to be operable during and after a loss-of-coolant accident (LOCA). They do not meet strict single failure compliance because the four hot leg water temperature instruments are supplied by one instrument power bus with all RCS hot leg RTD cables passing through one containment penetration; and the four cold leg instruments are supplied by a second instrument power bus with all cold leg RTD cables passing through one penetration. Although this does not meet the single failure criteria, the instrumentation available is deemed sufficient for the following reasons:

1. A common-mode failure which could eliminate the main control board indication for either the hot or cold leg temperature will not affect the other set of temperature indications;

2. Two of the hot leg wide range temperature RTDs are dual element. The second element of one of the dual element RTDs provides one wide range RCS hot leg temperature channel displayed on the remote shutdown panel. One cold leg temperature indication is provided on the remote shutdown panel in the same way; and

3. Core exit thermocouple temperatures displayed in the Main Control Room may be used as backup indication.

The range of the instrumentation is adequate to supply the operator with reliable information during normal, abnormal, and accident conditions. The range exceeds all expected design conditions.

7.5.2.1.2 Core Exit Temperature/Subcooling Margin Monitor System

The Core Exit Temperature/Subcooling Margin Monitor (CET/SMM) System utilizes safety-related, seismically qualified, and environmentally qualified components. Both redundancy and single failure criteria are met by having two trains with each train of instrumentation supplied by a separate instrument power supply bus.

7.5.2.1.3 Reactor Coolant System Pressure

The RCS wide range pressure sensor instrumentation discussed in Section 7.5.1.1.3 is redundant, qualified to be operable during the design basis accident, and seismically qualified. The instrument loop does not meet single failure criteria because both transmitters feed one recorder, and certain failures within the recorder could cause the failure of all the wide range pressure indicators and computer points. If a failure of the pressure recorder were to occur and cause the failure of all main control board indicators and computer points for this parameter, the operator would be able to display pressure from both instrument channels on the core exit thermocouple display because isolators protect the input to the Core Exit Thermocouple System. Additionally, indication on Remote Shutdown Panel 1(2)LP-57 would still be available from one of the pressure transmitters. Because of the additional qualified indicators available, this situation is considered acceptable.

7.5.2.1.4 Pressurizer Level

Pressurizer level sensor instrumentation is redundant, meets single failure criteria, is qualified to be operable during and after a LOCA, and is seismically qualified. The indicated range is sufficient for normal and emergency operation.

7.5.2.1.5 Reactor Coolant Level in the Vessel

The RVLIS discussed in Section 7.5.1.1.5, is redundant, meets single failure criteria, is qualified to be operable during and after a LOCA, and is seismically qualified.

7.5.2.2 Steam Generator Instrumentation

7.5.2.2.1 Steam Generator Level

Both the narrow and wide range steam generator level sensor instrumentation, discussed in Section 7.5.1.2.1, meet the required qualifications and criteria. Each of the two nonsafety-related wide range

level recorders display the level of two of the steam generators. A failure of one of the recorders could eliminate the indication for the associated two steam generators. However, the indication of the remaining two steam generators is not affected by this failure. This is acceptable because only two steam generators are required to remove decay heat. Additionally, narrow range steam generator level indication is not affected by this failure. The ranges provided for both the wide range and narrow range indications are adequate to provide the necessary information to the operator.

7.5.2.2.2 Steam Generator Pressure

Of the twelve steam generator pressure transmitters per unit, four are fully qualified. Each steam generator has one fully qualified transmitter powered from three of the four instrument buses.

7.5.2.2.3 Main Steam Flow

The main steam flow transmitters and instrumentation discussed in Section 7.5.1.2.3 meet the required qualifications and criteria in order to ensure their proper operation.

7.5.2.3 Containment Indications

7.5.2.3.1 Containment Pressure

The containment wide range pressure instrumentation is redundant, meets single failure criterion, and meets environmental and seismic qualifications. A single failure within the recorder could cause the failure of one wide range containment pressure indicator and computer point. Also, four narrow range containment pressure channels provide indication 0 to 60 psig. This range exceeds the design pressure for Containment. In the event of failure of the recorder discussed above, these narrow range channels will be available to provide the necessary indication.

7.5.2.3.2 Containment Water Level Indication

Only the containment narrow range sump level sensor instrumentation meets all requirements; however, the range provided is not adequate. The containment recirculation sump level and containment wide range water level sensor instruments do not meet environmental qualifications; nor does the containment recirculation sump level instrumentation, which is used to verify adequate net positive suction head for RHR pumps during cold leg recirculation, meet seismic and single failure cr
iteria.

7.5.2.3.3 Containment Hydrogen Concentration

The containment hydrogen concentration sensor instrumentation discussed in Section 7.5.1.3.3 meets the required qualifications and criteria.

7.5.2.4 Reactor Shutdown Indication

7.5.2.4.1 Control Rod Position

The control rod position indication is a backup to neutron flux indication and, therefore, is not required to meet the specific qualifications of other instrumentation. During normal and transient conditions, this instrumentation will be available to the operators.

7.5.2.4.2 Neutron Flux

The neutron flux instrumentation described in Section 7.5.1.4.2 is redundant, meets single failure criteria, and is seismically qualified. The neutron flux instrumentation is not environmentally qualified, except for the source and intermediate (wide) range. The range of instrumentation is sufficient to cover 11 decades of thermal neutron flux with at least one decade overlap between each of the source range and intermediate range instruments and between the intermediate and the power range instruments. This provides adequate indication to the operator during normal, abnormal, and accident conditions.

7.5.2.5 Containment Isolation

The containment isolation provisions meet the requirements with the deviations described in Section 7.5.1.5.

7.5.2.6 Core Cooling Indication

7.5.2.6.1 Injection Systems

Flow indication for centrifugal charging pumps, SI pumps, and RHR pumps is provided as indicated in Section 7.5.1.6.1. Although these indications do not meet seismic, redundancy, or single failure criteria, they are used as verification only. Their failure will not cause the failure of these pumps; therefore, this instrumentation is sufficient.

The RWST provides suction to the injection pumps during the injection phase of ECCS operation; therefore, it is necessary to be able to monitor RWST level. The instrumentation discussed in Section 7.5.1.6.1 does not meet the current requirements.

7.5.2.6.2 Accumulator Instrumentation

The accumulator level and pressure instrument loops are safety-related and meet the channel redundancy and single failure criteria. Because this instrumentation only provides indication to a passive component and its failure will not preclude proper operation of the accumulators, they are not required to meet environmental and seismic qualifications. The range of the instrumentation is sufficient to verify compliance with the Technical Specification limits for volume and pressure, which are based on the values used in the accident analyses described in Chapter 15.

The motor-operated isolation valves at the discharge of the accumulators are administratively controlled. During plant heatup, these valves are opened, de-energized, and verified opened and de-energized. Therefore, the valves cannot inadvertently change position during or following an accident.

7.5.2.6.3 Reactor Coolant System Instrumentation

The indication and limit switches which provide the indication for the PORVs and PORV block valves meet the requirements necessary to assure they will function as designed during and following an accident.

7.5.2.6.4 Auxiliary Feedwater System

The auxiliary feedwater flow instrumentation discussed in Section 7.5.1.6.4 are safety-related, seismically qualified, and are qualified to be operable during and after a LOCA. There is one auxiliary feedwater flow channel per steam generator. The instrument channels have redundant power supplies so, with the loss of one power supply, two channels of indication remain available. Auxiliary feedwater flow to two of the four steam generators is required in order to dissipate RCS residual heat. Also, the existing range exceeds that of the maximum expected auxiliary feedwater flow; therefore, this instrumentation is acceptable.

The CST and the associated piping is nonsafety-related and nonseismic with service water providing the safety-related backup to the CST. However, the CST is the preferred source of water for the auxiliary feedwater pumps.

7.5.2.7 Containment Cooling

The CS System flow instrumentation meets the necessary requirements. All three instrument loops are safety-related and seismically qualified. Because these instruments are used to provide system status and are not needed for the CS System to perform its intended function, they are not required to have redundant channels or meet single failure criteria.

The reactor containment fan coolers are redundant and safety-related. The indicating lights and ammeters need not meet all qualifications since they

provide system status information only. Also, because there are two sets of indication, reactor containment fan cooler status redundancy is provided and is, therefore, adequate for its intended purpose.

7.5.2.8 Chemical and Volume Control System

The instrumentation discussed in Section 7.5.1.8 does not meet the qualifications necessary to assure its adequacy during the design basis accident. However, these instruments only provide system status. The Chemical and Volume Control System is isolated following a safety injection; therefore, these instruments do not monitor key variables for accident monitoring.

7.5.2.9 Component Cooling Water System

The instruments provided do not meet all qualifications; however, these instruments provide system status only. They are not required for the CCW System to perform its design function during accident conditions.

7.5.2.10 Control Room Ventilation System

The indication provided does not meet all qualifications to assure its availability during the design basis accident; however, the indication provides system status only. Section 7.5.1.10 discusses the availability of the indication.

7.5.2.11 Power Supplies

Instrumentation provided to monitor the 4160-Vac and 480-Vac Engineered Safety Feature Power Supply Systems is safety-related and meets seismic qualifications. However, because this instrumentation provides system status only, it does not and is not required to meet redundancy and single failure criteria requirements.

7.5.2.12 Radiation Monitoring

Of the radiation monitoring indications and instrumentation discussed in Sections 7.5.1.12.1 and 7.5.1.12.2, only the containment area high range monitor provides the information necessary for the operator to accomplish specified safety functions. Therefore, the containment area high range instrumentation is redundant, meets single failure criteria, is safety-related, and meets the environmental and seismic qualifications. The other instrumentation discussed in Sections 7.5.1.12.1 and 7.5.1.12.2 does not meet all the requirements to assure its operation during the design basis accident; however, it provides status and backup information only.

7.5.3 References, Section 7.5

1. Letter from S.F. Stimac, CECo, to Dr. Thomas E. Murley, NRC, "Zion Station Units 1 and 2 Regulatory Guide 1.97 Compliance," Dated April 15, 1991.

2. Letter from S.F. Stimac, CECo, to Dr. Thomas E. Murley, NRC, "Zion Station Units 1 and 2 Regulatory Guide 1.97 Containment Isolation Valve Position Indication Supplemental Response," dated January 31, 1991.

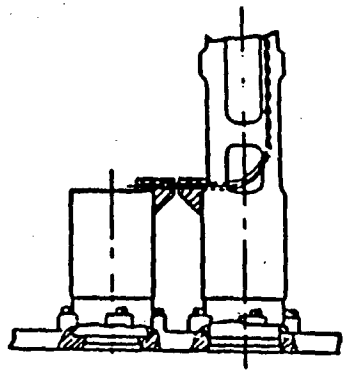

THERMOCOUPLE END MOUNT

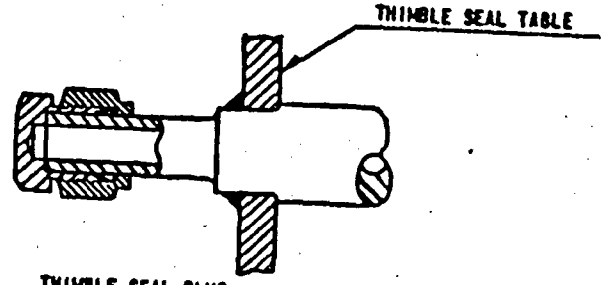

THIMBLE SEAL PLUG
(HYDROSTATIC TEST)

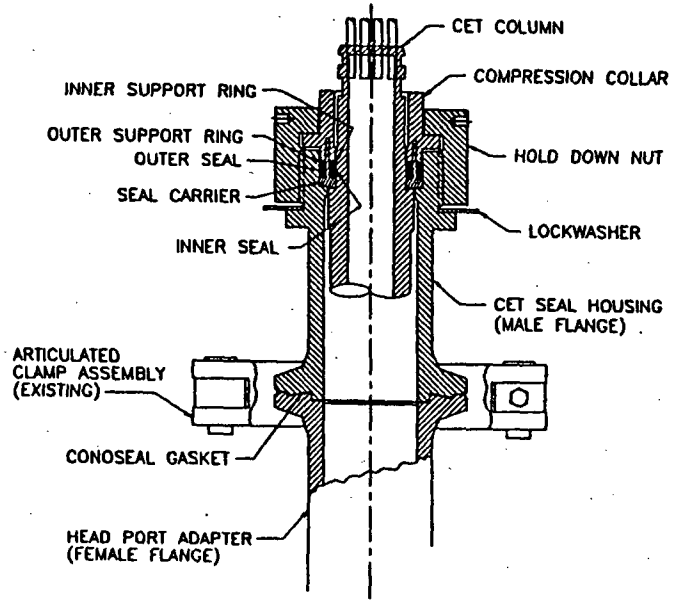

THERMOCOUPLE GUIDE TUBE TO VESSEL SEAL

THIMBLE LOW PRESSURE SEAL
(REFUELING ONLY)

THIMBLE GUIDE TUBE WELD UNION

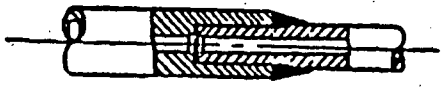

THIMBLE GUIDE TUBE TO VESSEL PENETRATION TUBE WELD JOINT

ZION STATION UFSAR

Figure 7.5-1
INCORE INSTRUMENTATION
DETAIL
MAY 1996

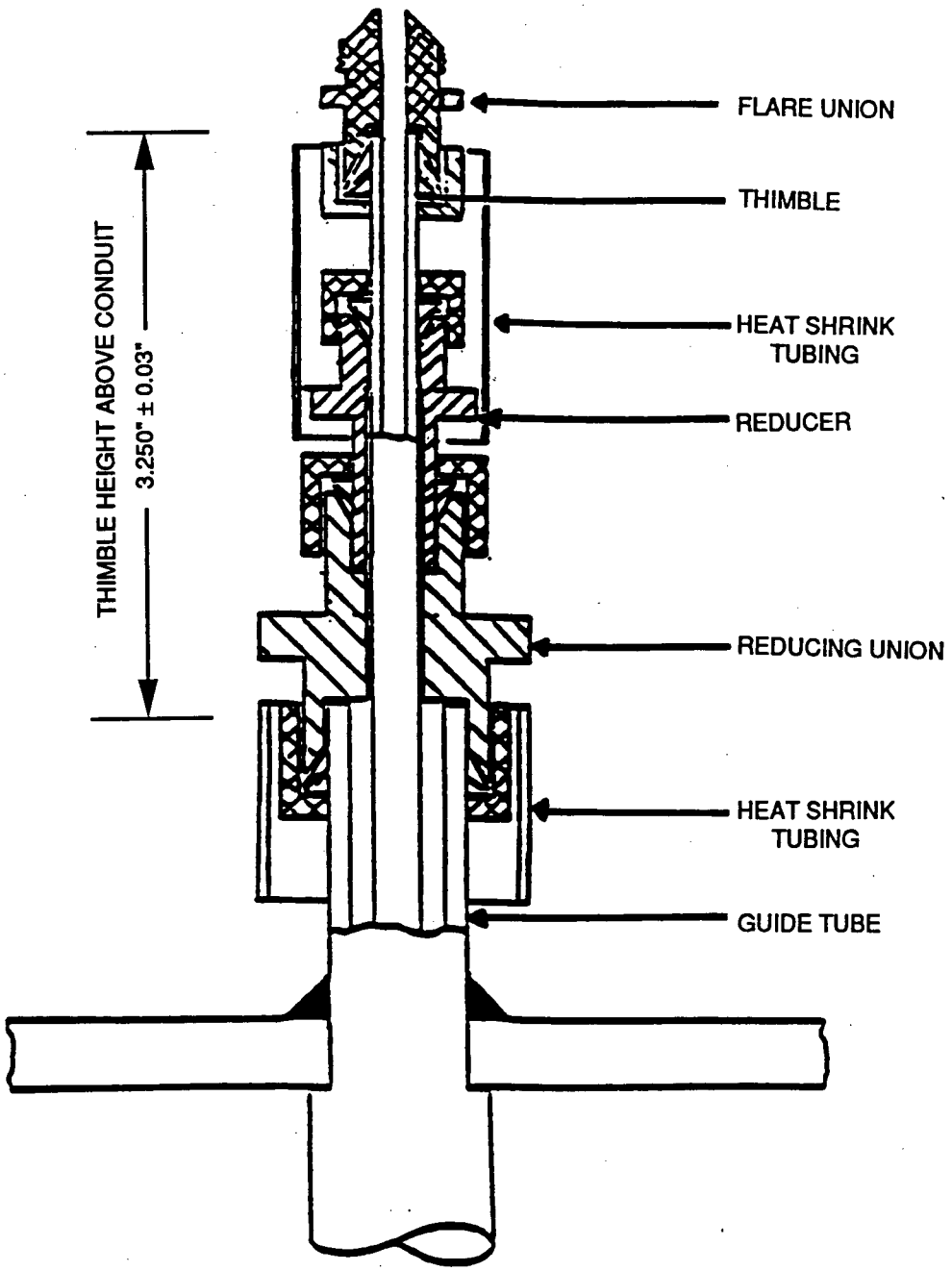

ZION STATION UFSAR

Figure 7.5-2

SEAL TABLE HIGH PRESSURE FITTING ARRANGEMENT

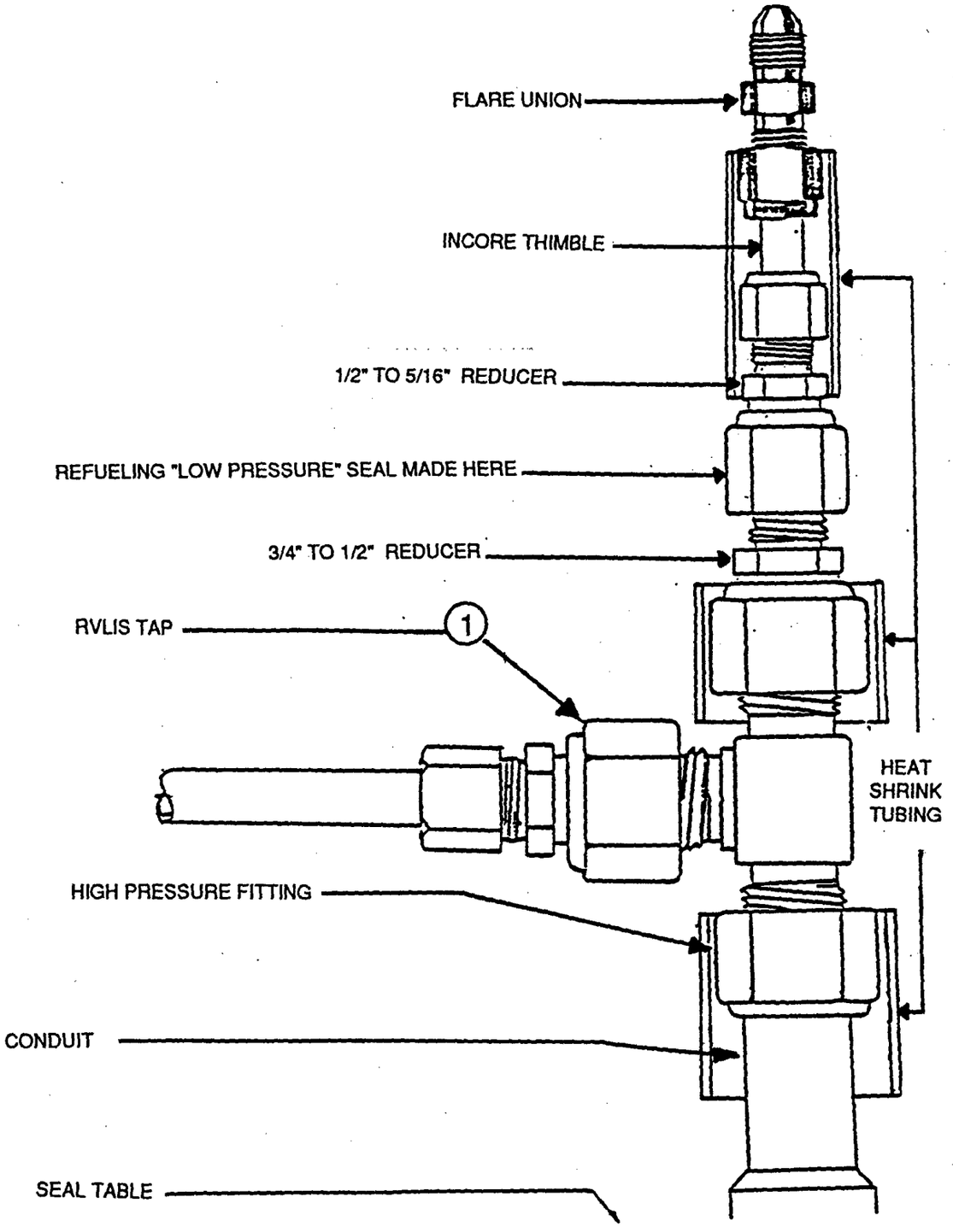

ZION STATION UFSAR

Figure 7.5-3

SEAL TABLE FITTING ARRANGEMENTS FOR C-8

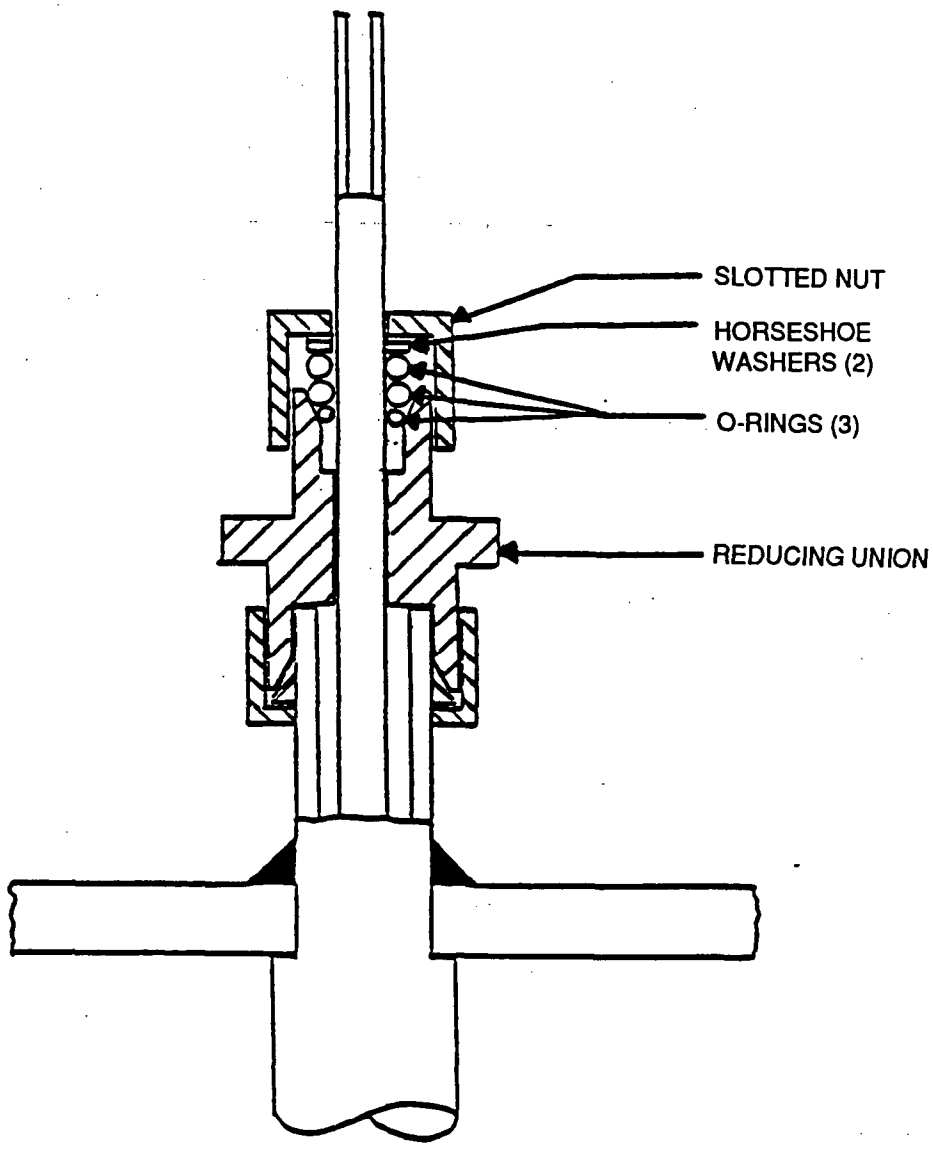

ZION STATION UFSAR

Figure 7.5-4

SEAL TABLE LOW PRESSURE SEAL ARRANGEMENT

7.6 ALL OTHER INSTRUMENTATION SYSTEMS REQUIRED FOR SAFETY

7.6.1 Description

The information in this section pertains to the excore Nuclear Instrumentation System (NIS). The NIS as it relates to reactor protection and trip input is discussed in Section 7.2. Other instrumentation is discussed in their respective system descriptions. NIS indicators, meters, recorders, annunciators, and computers from initial construction of Zion Station are, in general, considered nonsafety-related instrumentation.

7.6.1.1 Design Bases-Fission Process Monitors and Controls

The NIS is utilized primarily for reactor protection by monitoring of neutron flux and by generating appropriate trip and alarm functions for various phases of reactor operating and shutdown conditions. It also provides a secondary control function and indicates reactor status during startup and power operation. The NIS utilizes information from the three ranges of instrumentation. Each range of instrumentation (source, intermediate and power) provides the necessary overpower reactor trip protection required during operation in that range. The overlap of instrument ranges provides reliable continuous indication from source to power range. As the reactor power increases, the overpower protection trip is bypassed administratively after satisfactory higher range instrumentation operation is confirmed. Automatic reset of trip protection is provided when reducing power.

Two types of neutron detectors, with appropriate solid-state electronic circuitry, are used to monitor the leakage neutron flux from a completely shutdown condition to 120% of full power. The intermediate (wide) range provide indication up to 200% of full power.

The neutron flux covers a wide range between these extremes. Therefore, monitoring with several ranges of instrumentation is necessary. The lowest range (source range) covers six decades of leakage neutron flux. The lowest observed count rate depends on the strength of the neutron sources in the core and the core multiplication associated with the shutdown reactivity. This is generally greater than one count per second.

The next range (intermediate range) covers ten decades of leakage neutron flux. Detectors and instrumentation provide overlap between the higher portion of the source range and the lower portion of the intermediate range. The highest range of instrumentation (power range) covers slightly more than two decades of the total instrumentation range. This is a linear range that overlaps with the upper intermediate range. The overlap for all detector ranges is shown in Figure 7.2-4 in terms of leakage neutron flux. Startup rate (SUR) indication for the source and intermediate range channels is provided at the main control console and on the Nuclear Instrument Panel 1(2)CB24.

The excore NIS consists of various plugin type modules which perform the functions indicated on Figures 7.6-1 and 7.6-3 for the source, intermediate and power ranges. Components designed to military specifications are used where possible, in conjunction with a conservative design stressing reliability, derating of components and circuits, and the use of field-proven circuits. On-line testing and calibration features are provided for each channel. The test signals are superimposed on the normal sensor signal during plant operation. This permits valid trip conditions to override the test signal since the sensing elements are never removed from the circuit.

The system described above provides control room indication and recording of reactor neutron leakage flux during initial core-loading, shutdown, startup, and power operation as well as during subsequent refueling. Reactor trip and rod stop control and alarm signals are transmitted to the reactor control and protection system for automatic plant control. Equipment failures and test status information are annunciated in the Control Room.

The source and intermediate range is an environmentally qualified Gamma-Metrics RCS-300 Neutron Flux Monitoring System that complies with USNRC Regulatory Guide 1.97.

The NIS power range neutron detector has been vibration tested in both the transverse (horizontal) direction and the longitudinal (vertical) direction at acceleration levels greater than those expected during a seismic disturbance at a low seismic class plant. Neutron current measurements were made during the tests and current, resistance, and capacitance checks were made after the tests. No significant changes were seen. There was no mechanical damage to the detector. A summary of these seismic considerations is given in Table 3.10-1.

7.6.1.2 System Design

The NIS consists of four independent channels of neutron detection. Channel #1 consists of source, intermediate, and power range instrumentation. Channel #2 consists of source, intermediate, and power range instrumentation. Channel #3 consists of power range instrumentation. Channel #4 consists of power range instrumentation. The NIS detectors of Figures 7.6-1, 7.6-2, and 7.6-3 are installed around the reactor in six locations.

One dual fission chamber assembly provides a signal to a source and intermediate range instrumentation. A dual section uncompensated ionization chamber assembly provides a signal to the power range instrumentation.

The NIS channels provide an input to the 2 trains of Reactor Protection System (RPS). In addition, there are several auxiliary outputs: the audio-visual count rate, the comparator, the flux deviation and the startup rate. The various detectors associated with the four channels are shown in relative position with respect to the core configuration on Figure 7.6-2. Detector instrument wells in the primary shield minimize leakage flux attenuation and distortion.

7.6.1.2.1 Protection Philosophy

Nuclear plant protection assurance is obtained from the three ranges of excore nuclear instrumentation. Separation of redundant protection

channels are connected from the neutron sensor, with its associated cables, to the signal conditioning equipment in the Control Room. The signal conditioning equipment sends signals through its associated output wiring to indicating, recording, and protection devices. Where redundant protection channels are combined to provide nonprotection functions, the required signals are derived through isolation amplifiers/devices. These devices are designed so that open or short circuit conditions as well as the application of 120 Vac or 140 Vdc to the isolated side of the circuit will have no effect on the input or protection side of the circuit. As such, failures on the nonprotection side of the system will not affect the individual protection channels. Generally, the indicating and recording devices are on the nonprotection side of the isolation amplifiers. Redundant channels are powered from independent power sources, each channel being provided with the necessary power supplies for its detectors, signal conditioning equipment, trip bistables and associated trip relays. The nuclear instrumentation channels are mounted in four separate racks to provide the necessary physical separation between redundant channels.

The overpower protection provided by the excore NIS consists of three discrete levels. Continuation of startup operation or power increase requires a permissive signal from the higher range instrumentation channels before the lower range level trips can be manually blocked by the operator.

A one of two intermediate range permissive signal (P-6 on Table 7.1-1) is required prior to source range level trip blocking. Source range level trips are automatically reactivated when both intermediate range channels are below the reset of the permissive (P-6) level. There are provisions for administratively reactivating the source range level trip if required. Source range level trip block is automatically maintained by the power range permissive (P-10) which also permits blocking of the intermediate range and power range (low setpoint) flux level trips.

The intermediate range level trip and the power range (low setpoint) level trip can only be blocked after satisfactory operation and permissive information are obtained from two of four power range channels. Individual blocking switches are provided so that the power range (low setpoint) trip and intermediate range trip can be independently blocked. These trips are automatically reactivated when any three of the four power range channels are below the permissive (P-10) level, thus ensuring automatic activation of more restrictive trip protection.

Blocking of any reactor trip function is indicated by the control board annunciator. Channels which provide reactor plant protection through one of two or one of four logic matrices are equipped with positive detent type trip-bypass switches to enable channel testing. The trip-bypass condition for individual channels is indicated at the control board and at the

nuclear instrumentation racks. The reactor plant protection afforded by the power range (high-setpoint) trip is never blocked or bypassed.

7.6.1.2.2 Components

7.6.1.2.2.1 Source Range Instrumentation

The source range output information is shown in Figure 7.6-3 and Table 7.6-1. The two source range detectors are wide range dual fission chamber detector assemblies. Both fission detector chambers in an assembly are used for the required source range sensitivity while the intermediate range uses only one chamber. Together the wide range system covers 11 decades. Each detector assembly has a nominal thermal neutron sensitivity of 4 counts per second per neutron per square centimeter per second (cps/nv) and provides pulse signals to an amplifier. These detectors are installed on opposite "flat" portions of the core containing the secondary sources, at an elevation approximating one half of the core height. The detector assemblies have stainless steel enclosures. The detector assemblies have almost fifty feet of attached cable hose which is environmentally qualified (EQ). The first 20 feet of the attached cable is also radiation resistant. No connections are made in the junction box at the top of the well. The connection between the detector cable and the rest of the in-containment cable is made at a different junction box. The detector, cable hose, and junction box in containment, as well as the related penetration, are EQ, for each channel. The amplified detector signal is received by the source range instrumentation conditioning equipment located in the control room racks. The detector signal, which is a random count rate proportional to leakage neutron flux, is conditioned for conversion to an analog signal proportional to the logarithm of the neutron flux count rate.

The isolated analog signals from each channel are sent to various recording and indicating devices to provide the operator with necessary startup information.

The signal received from the detector has a range of 1 to 10^6 randomly generated pulses per second and is received outside the containment by a low noise, wide range pulse amplifier. The amplifier optimizes the signal-to-noise ratio and also furnishes high voltage to the detector. Discrimination is provided between neutron flux pulses and combined noise and gamma-generated pulses.

The circuitry in the wide range amplifier provides continuous self-diagnostics of the integrity of detector, cables, and power supplies. The amplifier has provisions for interrupting the AC signal from the fission chamber and inputting a test signal which is used to verify proper operation of the entire system. The signal processors have test switches for inserting test signals or checking setpoints.

The amplifier output is received at the source range drawer located in the Control Room and the signal passes through an adjustable discriminator module. The drawer supplies two outputs. One output goes to an isolated

scaler-timer unit on the audio-visual channel drawer (see source range auxiliary equipment). This same signal also feeds the audio count rate channel which provides an audible count rate signal, proportional to the neutron flux. Speakers are provided both in the Containment and in the Control Room. This signal is generated from an isolation amplifier output because there is no protection function involved. The second output goes to the Count and Rate circuit assembly, which converts pulses to a log dc level representative of the leakage flux level.

The log signal is then amplified for local indication on the front panel of the source range signal processor drawer and is also delivered through a parallel run to the source range level bistables and isolation amplifier. The analog output signal is proportional to the count rate being received from the sensor and is displayed by the front panel meter on a scale calibrated logarithmically from 1 to 10^6 counts per second. The solid-state isolation amplifier provides five analog outputs listed in Table 7.6-1, all of which are adjustable through attenuator controls.

All bistables employ a basic plug-in module with the external wiring determining the mode of operation, latching or nonlatching, and direction of output change with rising power. Bistables have one adjustment: "TRIP LEVEL". The time delay relay for High Flux @ Shutdown and all the associated bistables are located in the source range drawer.

Of the three bistables monitoring the source range level amplifier signal, one is a spare, one is used to monitor shutdown flux level only, and the third monitors source range operation during shutdown and startup operation and provides a reactor trip on high flux level. Trip signals from the third bistable are transmitted to the protection racks where the necessary logic involved in generating reactor trip signals is performed.

The reactivity of the core during shutdown is monitored by a High Flux at Shutdown bistable to ensure protection of plant personnel. Bistable tripping will initiate local visual and audible annunciation of any abnormal increase in core activity. A time delay feature in the tripping circuitry helps to

eliminate nuisance alarms caused by electrical noise in the circuit. Visual annunciation occurs at the NIS rack on the main control board. Audible annunciation is handled by the annunciator located in the Control Room. These annunciators ensure that the plant operator will be alerted to any potentially hazardous condition. This bistable action will be manually blocked by deliberate operator action during plant startup. Blocking is continuously annunciated at the control board during source range operation. The bistable trip point is usually set at approximately one-half decade above the flux level recorded during full shutdown and is known as the "High Flux at Shutdown" alarm point.

The source range level reactor trip limits the core activity during the span of source range operation until such time as the intermediate range channels assume primary control of the NIS reactor protection inputs, in addition to the power range channels. At that time, when the intermediate range permissive P-6 is available, the source range reactor trip bistable may be manually blocked by the operator actuating two momentary-contact switches located on the main control board.

An Annunciator on the main control board called "Malfunction and/or Test" for each channel is initiated on various power supply problems or upon system testing.

A test-calibrate module is also included in each source range drawer for self-check of that particular channel. A multiposition switch on the source range front panel controls this module and also the operation of the built-in oscillator circuits. The module is capable of injecting fixed value test signals or a variable dc voltage corresponding to 1 to 10^6 counts per second at the input to the log amplifier. An interlock between the trip bypass switch and the test-calibrate switch will prevent inadvertent actuation of the reactor trip circuits, (i.e., the channel cannot be put in the test mode unless the trip is defeated). Trip bypass is annunciated on the source range drawer and on the main control board. Operation of the test-calibrate module is annunciated on the control board as "NUCLEAR INSTR SYSTEM CHANNEL TEST." This common annunciator for all NIS channels will be alarmed when any channel is placed in the test position and will alert the operator that a test is being performed at the NIS racks.

7.6.1.2.2.1.1 Source Range Auxiliary Equipment

7.6.1.2.2.1.1.1 Audio-Visual Count Rate

The audio-visual count rate receives a signal from each of the source range channels. This isolated signal originates at the discriminator output in each source range. A switch on the audio count rate drawer selects either source range channel for monitoring. The selected signal is fed to a scaler-timer unit which permits count accumulation in the preset time or preset count mode. A visual display to five decimal places is presented through counting strips located on the front of the audio count rate drawer.

An "AUDIO MULTIPLIER" switch permits division of the scaler output signal by 10, 100, 1000, or 10,000. This signal, derived from the printer output of the scaler, is conditioned and sent to two of the audio amplifiers which power two speakers: one speaker located in the Control Room, and the other in the Containment. These speakers give plant personnel an audible indication of the count rate. Since the audio amplifier signal is taken from the coded scaler output, adjustment of the "AUDIO MULTIPLIER" switch will alter only the audible count rate. This enables the operator to maintain the audible count rate at a distinguishable level.

7.6.1.2.2.1.1.2 Remote Count Rate Meter

The remote meter indication is an analog signal proportional to the count rate being received, and is obtained from the 0- to 1 mAdc isolation amplifier output.

The meter is mounted on the main control board and calibrated logarithmically from 10^0 to 10^6 cps. This meter gives the same indication at the control board as is displayed by the local meter on the corresponding source range signal processor drawer.

7.6.1.2.2.1.1.3 Remote Recorder

This two-pen recorder is capable of continuously recording any two NIS channels at a time. Each pen receives its signal through a multiposition switch which can select any one of the eight NIS level signals. In the case of the source ranges, a signal proportional to the count rate range of 10^0 to 10^6 cps, is supplied for recording during source range operation, per Table 7.6-1.

7.6.1.2.2.1.1.4 Startup Rate Circuitry

The SUR drawer receives four input signals (0 to 10 Vdc) one from each of the source and intermediate range channels. Four rate amplifier modules condition these signals and output four rate signals to the respective

control room SUR meters. A test module is provided which can inject a test signal into any one of the rate circuits and can be monitored on a test meter mounted on the front panel of this drawer. SUR indication is also provided for each source range channel. Two power supplies are provided to assure rate indication from at least one source and intermediate range channel pair.

7.6.1.2.2.2 Intermediate Range Instrumentation

Intermediate range output information is shown in Figure 7.6-3 and Table 7.6-2. The intermediate range uses the same detector assembly, containment penetration, and amplifier as the source range for a channel. The detector assemblies are described in Section 7.6.1.2.2.1.

The intermediate (wide) range channels provide coverage from low in the source range to 200% power as is shown in Figure 7.2-4. Each intermediate range channel covers approximately 10 decades of leakage flux. Containment penetrations, wide range amplifiers, and associated cabling are all physically separated from its redundant channel. The equipment for each channel, including the high voltage power supplies and controls, is located in separate drawers. To maintain separation between these redundant channels, the drawers are mounted in separate racks. The modular unit, comprised of several operational amplifiers and associated discrete solid-state components, produces an analog voltage output signal which is proportional to the logarithm of the input current. This signal is monitored by an isolation amplifier and the various bistable relay-driven modules within the intermediate range drawer. The isolation amplifiers (for SUR circuits, remote recording, remote indication, etc.) and bistable amplifiers (for permissives, rod stop and reactor trip) use this analog voltage to indicate plant status and provide the necessary plant protection functions. Local indication is provided by a meter mounted on the front panel of the drawer which has a logarithmic scale calibration of 10^{-8} to 200% power. The isolation amplifier is the same type solid-state module that is used in the source range and supplies outputs for functions similar to the source range.

The intermediate range permissive P-6 bistable drives two relays per channel which are combined in 1 of 2 matrices to provide the permissive function and control board annunciation of permissive unavailability. Permissive P-6 permits manual blocking of the source range trips. Once source range blocking has been performed, the operator may, through administrative action, defeat permissive P-6 and reactivate trip functions if required. This defeat is accomplished by the coincident operation of two control board mounted, momentary-contact switches. This provision is only operational below permissive P-10 which is supplied by the power range channels. Above P-10, the defeat circuit is automatically bypassed and permissive P-6 is maintained.

The level bistable unit which provides the intermediate range rod stop function drives a relay. The relay from each intermediate range channel supplies an interlock for the rod stop function and control board annunciation. Blocking of the outputs of these matrices is administratively performed when nuclear power is above permissive P-10 and can only be accomplished by deliberate operator action on two control board mounted switches. All relays associated with plant control or protection are located in the logic or auxiliary relay racks.

The intermediate range reactor trip function is provided by a logic arrangement similar to the P-6 permissive circuit arrangement, the only difference being the trip point of the bistable units. The same control board switches which control blocking of the rod stop matrices also provide blocking action for the reactor trip matrices. These blocks are manually inserted when the power range instrumentation indicates proper operation through the de-energizing of the control board annunciator "POWER RANGE PERMISSIVE P-10." On decreasing power the more restrictive intermediate range trip functions are automatically reinserted in the protective system. While these trips are active, there will be continuous illumination on the main control board of "INTERMEDIATE RANGE TRIP ACTIVE."

Administrative testing of each intermediate range channel is provided by a built-in test-calibrate module which injects a test signal at the input to the log amplifier. The signal is controlled by a multiposition switch on the front of each intermediate range drawer. A fixed signal is available along with a variable signal, selectable in decade increments.

As in source range testing, the test switch on the intermediate range must be operated in coincidence with a trip bypass on the drawer. An interlock between these switches prevents injection of a test signal, until the trip bypass is in operation. Removal of the trip bypass also removes the test signal.

7.6.1.2.2.2.1 Intermediate Range Auxiliary Equipment

7.6.1.2.2.2.1.1 Remote Meter

The remote meter indication is in the form of an analog signal (0 to 1 mAdc) proportional to the detector current. The isolation amplifier in each channel supplies this output to a separate meter. Meter calibration is 10^{-8} to 100% power. The processor drawer meter and the computer read out as high as 200% power.

7.6.1.2.2.2.1.2 Remote Recorder

This is the same recorder described above for the source range. A 0 to 50 mVdc signal from the isolation amplifier is supplied to the recorder and is proportional to the detector signal with a recorder calibrated range of 10^{-8} to 100% power. The signal from Intermediate Range Channel 1 is available in position 3 of the recorder selector switches, and Intermediate Range Channel 2 in position 4.

7.6.1.2.2.2.1.3 Startup Rate Circuitry

The SUR drawer receives four input signals (0 to 10 Vdc) one from each of the source and intermediate range drawers. Four rate amplifier modules condition these signals and output four rate signals to the respective control room SUR meters. A test module is provided which can inject a test signal into any one of the rate circuits and can be monitored on a test meter mounted on the front panel of this drawer. Two power supplies are provided to assure rate indication from at least one source and intermediate range channel pair.

7.6.1.2.2.3 Power Range Instrumentation

The power range output information is tabulated in Table 7.6-3. Each of the four dual section power range detectors is a long uncompensated ion chamber assembly which is comprised of two separate neutron sensitive sections. Each section supplies a current signal to the associated power

range signal conditioning equipment in the control room racks. The four power range channels are operated from separate ac sources and are housed in separate racks so that a single failure will not cause loss of protection functions. There is one high voltage power supply per channel and it supplies voltage to both sections of the associated detector. The individual current signals obtained from each section of the detector are proportional to upper core and lower core neutron flux respectively. These detectors have a total neutron sensitive length of 10 feet and a nominal thermal neutron sensitivity for each section of 1.7×10^{-13} amperes per neutron per square centimeter per second. Gamma sensitivity of each section is approximately 10^{-10} amperes per Roentgen per hour.

The detector assemblies for power range operation are installed vertically and located equidistant from the reactor vessel at all points. To minimize neutron flux pattern distortions, they are located within one foot of the reactor vessel. Cabling from individual detector wells to the containment penetrations and to the instrument racks in the Control Room is routed in individual conduits with physical separation between the penetrations and conduits associated with redundant protective channels.

The two signals are received at the channel input and handled through separate ammeter-shunt assemblies. Four full-scale ranges can be selected for each ammeter through switches located on the front panel of the power range drawer, 100 μA, 500 μA, 1 mA, and 5 mAdc. The switch selects shunt resistors for the meter but never interrupts the ion chamber signal to the power range channel. The circuit is designed so that a failure of the meter or switch will not interrupt the signal to the average power circuitry.

The individual currents are displayed on the two front panel ion chamber current meters and are then sent to separate isolation amplifiers. There are two isolation amplifiers monitoring each of the two individual current signals. The unit feeding the ΔT protection function is being used for its impedance matching characteristics rather than isolation. Two of the isolation amplifiers (used as impedance matching networks), one monitoring each of the currents, supply signals to the ΔT reset. The other two isolation amplifiers provide outputs for the remote recorder, remote meter, the computer, and the flux deviation circuitry. The individual current signals are then sent to a summing amplifier module which outputs a linear 0- to 10-Vdc signal proportional to their average. The output of this unit will feed a linear amplifier with two controls: one a "ZERO" adjust located on the module itself, while the other is a "GAIN" adjust with a calibrated dial located on the drawer's front panel. The output signal from this unit corresponds to 0% to 120% of full power and is displayed on a percent full-power meter on the front panel of the power range drawer. This same signal is delivered directly to three

isolation amplifiers and six bistable relay driven modules. These isolation amplifiers are identical to those previously described and the outputs are the same in number and range but are used in different functions. (Specific outputs from the amplifiers are discussed in the auxiliary equipment section which follows.)

The bistable units which sense the power level signal as derived by the linear amplifier perform the following functions:

1. overpower rod stop (blocks automatic and manual rod withdrawal);

2. permissive functions (provisions for three are incorporated in the design, but only two are used on Zion);

3. low-range reactor trip;

4. high-range reactor trip; and

5. power range rate trips.

The power range rate trip bistable units are latching, while the remaining units are nonlatching.

The overpower rod stop and permissive bistables are units which trip on high power level and control relays in the remote relay racks. The rod stop matrixes (one of four) provide a rod stop function to the rod control system and a main control board annunciator. Two of four logic, developed by relays controlled by the respective power range bistables, provide the signals required for the permissive functions. One set of relays provides permissive P-10, as was previously discussed with regard to its use in the source range and intermediate range. Two other matrixes are available to provide inputs to two additional permissive functions when required. One group is used to provide permissive P-8.

Permissive P-8 and P-10 are supplied solely by nuclear instrumentation. For this reason, the nuclear instrumentation design provides for main control board annunciation of P-8 and P-10 unavailability. Permissive P-10 is used in all three ranges of nuclear instrumentation while P-8 is provided by nuclear instrumentation for use in the RPS.

The low range trip bistable actuates two relays in the system. The two relays provide redundancy within the logic portion of the protection system. Each relay is used in a separate matrix with the relays from the other power range channels to continue the redundancy. The logic circuitry formed by the contacts on these relays provide for one of four and two of four logic outputs. The low range trip relays provide the following functions:

1. computer input (single channel);

2. low range trip annunciation (two of four coincidence); and

3. annunciation of "NIS POWER RANGE FLUX LEVEL HIGH" (one of four).

Provisions for manually blocking these functions become available when two of four power ranges exceed the permissive P-10 level. Operator action on two control board mounted momentary-contact switches then initiates the blocking action. A control board permissive status light, "POWER RANGE (Low Setting) TRIP ACTIVE", is illuminated continuously when the trip function is active, and goes out upon manual blocking. On decreasing power, three of four power ranges below the P-10 power level will automatically reactivate the low range trip and illuminate the annunciator.

The high range reactor trip logic circuitry is developed identical to the low range reactor trip circuitry, but no provision for blocking is included. The high range trip remains active at all times to prevent any continuation of an overpower condition.

The power range rate trip is a circuit that monitors fast rates of change in detector output. It provides protection against multiple rod drops and ejected rod accidents. It is divided into negative and positive rate sections which have setpoints of 5% in 2 seconds. The rate trip logic circuitry is developed similar to the low range reactor trip circuitry. Redundant relays for the protection functions are located in the logic portion of the protection system.

An additional bistable unit monitors the high voltage power supply in the power range. The bistable provides relay actuation in the remote relay racks on failure of power range high voltage. While there is a separate relay for each power range, they control a common "POWER RANGE LOSS OF DETECTOR VOLTAGE" annunciator on the main control board. Separate local indication of high voltage failure is provided on the power range drawers.

The test-calibrate module which is provided on each power range is capable of injecting test signals at several points in the channel. In all cases, the test signals are superimposed on the normal signal. Test signals can be injected independently or simultaneously at the input of either ammeter-shunt assembly to appear as the individual ion chamber currents. Operation of the test-calibrate switch on any power range will cause the "NUCLEAR INSTR SYSTEM CHANNEL TEST" annunciator to be alarmed on the main control board.

7.6.1.2.2.3.1 Power Range Auxiliary Equipment

7.6.1.2.2.3.1.1 Comparator

The comparator receives an isolated signal from each of the four power range detectors. These signals are conditioned in separate operational amplifier circuits and then compared with one another to determine if a preset amount of deviation of power levels has occurred between any two power ranges. Should such a deviation occur, the comparator output will operate a remote relay to actuate the control board annunciator, "NIS POWER RANGE CHANNEL DEVIATION." This alarm will alert the operator to either a power unbalance being monitored by the power ranges or to a channel failure. Through other indicators, the operator can then determine the deviating channel(s) and take corrective action. Should correction of the situation not be immediately possible (e.g., a channel failure, rather than reactor condition), provisions are available to eliminate the failed channel from the comparison function. The comparator can then continue to monitor the active channels.

7.6.1.2.2.3.1.2 Remote Recorder

Each power range supplies a 0- to 50-mVdc signal proportional to 0% to 120% full power to the selector switches for the two pens on the main nuclear power recorder. The signals from Power Ranges Number 1, Number 2, Number 3, and Number 4 are available in positions 5, 6, 7 and 8 respectively on either channel selector switch. Any two of the ranges can be monitored continually during power range operation. All four average power signals are continually indicated on control board meters.

Means are also provided to record the calibrated flux difference between upper and lower ion chamber current on this recorder. Any two of the four channels can be selected for recording by switch positions 9 and 10. Flux differences up to 60% in either direction can be recorded.

7.6.1.2.2.3.1.3 Remote Meter

The remote meters receive the 0- to 1-mA isolated output that is available from each power range. This indication corresponds to that shown on the power range drawer. The signal is displayed on a meter scale calibrated from 0% to 120% of full power.

7.6.1.2.2.3.1.4 (DELETED)

7.6.1.2.2.3.1.5 Ion Chamber Current Recorders

Four two-pen recorders are provided on the control board to record the upper and lower ion chamber currents of diagonally opposite power range detectors. Two isolated outputs (0 to 5 Vdc), one from each of the ion chamber isolation amplifiers, are provided for each recorder. Comparison of the two traces will be an indication of the flux difference between the upper and lower sections of a given detector.

7.6.1.2.2.3.1.6 Remote Meter (Delta Flux)

Four control board mounted meters display the normalized flux difference between the upper and lower ion chambers for each of the power range detectors. The indication is adjusted to conform with the axial offset as determined by incore flux measurements. The scale is -30% to 0 to +30%.

7.6.1.2.2.3.1.7 Flux Deviation and Miscellaneous Control and Indication

This portion of the NIS incorporates circuitry for comparing the power range upper ion chamber signals and the power range lower ion chamber signals. A flux deviation alarm circuit is provided for each of the following conditions:

1. A high deviation of any upper ion chamber signal from the average of all the upper ion chamber signals; and

2. A high deviation of any lower ion chamber signal from the average of all the lower ion chamber signals.

The output of the four upper ion chamber signals from the average isolation amplifiers are fed to an averaging amplifier. In addition, the output of each ion chamber isolation amplifier is run to a separate comparator (one for each output). An adjustable gain control circuit (0 to 1.2) is provided with the averaging amplifier. The output of the averaging amplifier is then run to each of four comparators where the output of the averaging amplifier is compared against each of the ion chamber signals. The comparator will trip a bistable when any of the individual signals is equal to or greater than a preset amount above the average signal. The bistable actuates an annunciator (one for the upper ion chamber alarm channel and one for the lower channel) on a high deviation condition. The deviation alarms are designed to trip on a differential based on a percent of point (or percent of average power) over the range of 50% to 120% full power as determined by the average of the four power range signals. The alarm circuits are defeated and the annunciator will not illuminate when all power range channels are below 50% power.

One channel can be defeated without changing the alarm setpoint by placing the channel defeat switch on the front of the drawer in the appropriate position. To change the amount of deviation required to initiate an alarm,

One channel can be defeated without changing the alarm setpoint by placing the channel defeat switch on the front of the drawer in the appropriate position. To change the amount of deviation required to initiate an alarm, the gain of the averaging amplifier need only be changed in the appropriate direction.

If one or both quadrant power tilt alarms are inoperable then quadrant power tilt ratios shall be calculated and logged, along with individual upper and lower excore calibrated outputs, four times a shift and following a load change of more than 10% power at any power level above 50%.

Switches are also provided on this drawer to permit a failed power range channel's overpower-rod stop function to be bypassed, and its average power signal to the Reactor Coolant System to be replaced by a signal derived from an active channel. This will allow normal power operation to continue while the failed channel is repaired. This panel is located on NIS Rack IV.

7.6.1.2.2.3.1.8 Output Information

Tables 7.6-1, 7.6-2 and 7.6-3 provide the NIS control and indication output information for the source, intermediate and power ranges respectively.

7.6.2 Analysis

7.6.2.1 Philosophy and Setpoints

During plant shutdown and operation, three discrete independent levels of nuclear protection are provided from the three overlapping ranges of excore nuclear instrumentation. The basic protection philosophy is that the level protection is present in all three ranges to provide a reliable, rapid and restrictive protection system which is not dependent upon operation of higher range instrumentation.

Reliability is obtained by providing redundant channels which are physically and electrically separated. Fast trip response is an inherent advantage of using level trip protection in lieu of SUR protection (with a long time constant) during plant startup. More restrictive operation is an inherent feature since an increase in plant power cannot be performed until satisfactory operation is obtained from higher range instrumentation which permits administrative bypass of the lower range instrumentation. On decreasing power level, protection is automatically made more restrictive. While in the source range, startup transients are rapidly terminated without significant increases in nuclear flux and with essentially no power generation or reactor coolant temperature increase.

The indications and administrative actions required by this protection system are readily available to the operator and should result in a safe, uncomplicated increase of power.

7.6.2.2 Reactor Trip Protection

While below the P-6 permissive setpoint during reactor startup, annunciation is continuously displayed by the control board status lights. As startup continues, the operator will be made aware of satisfactory operation of one or more intermediate range channels by the de-energizing of the P-6 permissive control board annunciator light. The source and intermediate range flux level information is also readily available on recorders and indicators at the control console. At this time, if both intermediate range channels are functioning properly, the operator would depress the two manual block switches associated with the source range logic circuitry, thus blocking the source range trip logic outputs. The manual block should not be initiated until at least one decade of satisfactory intermediate range operation is obtained.

Continuation of the startup procedure in the intermediate range would result in a normal power increase and the receipt of a permissive (P-10) signal from the power range channels when two of four channels exceed 10% of full power. The operator would be alerted to this condition by the de-energizing of the control board P-10 permissive status light. The operator should then depress the momentary "MANUAL BLOCK" push buttons associated with the intermediate range rod stop and reactor trip logic. This would transfer protection to the low-range trips for the four power range channels. Indicators (one per channel) and a recorder also indicate plant status in terms of percent full power. If the operator does not block the intermediate range trip and continues the power increase, a rod stop will automatically occur from either of the intermediate range channels. The power range low-range manual block switches (two) must also be depressed to initiate blocking prior to continuation of the power increase. The permissive functions associated with administrative trip blocking and automatic reactivation are provided with the same separation and redundancy as the trip functions.

When decreasing power operation to lower levels, more restrictive trip protection is automatically afforded when three of four power range channels are below P-10 permissive and when two of two intermediate range channels are below the permissive P-6. The operator will be alerted to the more restrictive trip protection by the presence of the P-10 and P-6 permissive status lights when the setpoints are passed while decreasing power.

7.6.2.3 Control and Alarm Functions

Various control and alarm functions are obtained from the three ranges of excore nuclear instrumentation during shutdown, startup, and power operation. These functions are used to alert the operator of conditions which require administrative action and alert personnel of unsafe reactor

conditions. They also provide signals to the rod control system for automatic blocking of rod withdrawal during plant operation to avoid unnecessary reactor trips.

7.6.2.3.1 Source Range

No control functions are obtained from the source range channels. Alarm functions are provided to alert the operator of any inadvertent changes in shutdown reactivity. Visual and audible annunciation of this condition is at the control board. Audible annunciation for Containment can be manually initiated from the Control Room. This alarm can either be blocked prior to startup or can serve as the startup alarm in conjunction with administrative procedures.

7.6.2.3.2 Intermediate Range

Both alarm and control functions are supplied by the intermediate range channels. Blocking of rod withdrawal is initiated by either intermediate range channel on high flux level. This condition is alarmed at the control board to alert the operator that rod stop has been initiated. In addition, the intermediate range channels de-energize an illuminated control room alarm when either channel exceeds the P-6 permissive level. This alerts the operator to the fact that he must take administrative action to manually block the source range trips to prevent an inadvertent reactor trip during normal power increase.

7.6.2.3.3 Power Range

The power ranges provide alarm and control functions similar to those in the intermediate ranges. An overpower rod stop function from any of the four power range channels inhibits rod withdrawal and is alarmed at the control board. The power ranges also de-energize a control room alarm when two of four channels exceed permissive P-10 level. As in the case of P-6 in the intermediate range, this alerts the operating personnel that administrative action (namely, blocking of intermediate and low range trips) is required before any further power increase may take place.

A permissive annunciator is provided for P-8, "SINGLE LOOP LOSS OF FLOW TRP BLOCK P-8". The extinguishing of the P-8 permissive annunciator alerts the operator that the low flow trips and "pump breaker open" trips are now active. These trips are blocked while the annunciator is alarmed.

Other alarm functions are the power range channel deviation and flux deviation. The power range channel deviation alarm is furnished by the comparator channel (comparator and rate drawer) which provides a comparison of the average channel power level signals. The flux deviation alarm is furnished by the flux deviation drawer which uses individual (upper and lower) ion chamber current signals supplied by the power range channels. Actuation of these alarms alert the operator to a power imbalance between

the power range channels so that corrective actions can be taken. Finally, three signals are supplied by each power range channel, one signal from each individual ion chamber isolation amplifier, and one signal from the average power isolation amplifier.

The isolated average power signal is transmitted through the flux deviation and miscellaneous control and indication drawer switches. Any one of these signals, or the average of all four, is used in the process control system for the rod speed control function.

7.6.2.4 Loss of Power

The NIS draws its primary power from the instrument buses whose reliability is discussed in Chapter 8. Redundant NIS channels are powered from separate buses.

During power operation, the loss of a single bus would not result in a reactor trip since the power range reactor trip function operates from two of four logic. If the bus failure occurred during source or intermediate range operation (one of two logic) a reactor trip condition would result.

7.6.2.5 Safety Factors

The relation of the power range channels to the RPS has been described in Section 7.2. To maintain the desired accuracy in trip action, the total error from drift in the power range channels will be held to ± 1.0% at full power. Routine tests and calibration will ensure that this degree of deviation is not exceeded. Bistable trip setpoints of the power range channels will also be held to an accuracy of ± 1.0% of full power.

TABLE 7.6-1

SOURCE RANGE

Signal and Source	Destination and/or Function
1. Isolation Amplifier (See Figure 7.6-3)	Rate Amplifier/ Auxiliary Channel Startup Rate Computer Spare Remote Meter counts per second (cps) Remote Recorder
2. Bistable Amplifiers	Miscellaneous Process Relay Rack (Spare) RPS Relay Rack (Source Range Reactor Trip)
3. Manual Block	NSSS Annunciator Relay Cabinet (Annunciate "Source Range High Shutdown Flux Alarm Blocked")
4. Trip Bypass	Reactor Protection System Relay Rack (Block of Source Range Reactor Trip)
5. Test-Calibrate	NSSS Annunciator Relay Cabinet (Annunciate "NIS Channel Test")
6. Discriminator	Source Range Auxiliary Channel (Audio-Visual)
7. High Flux Level at Shutdown	NSSS Annunciator Relay Cabinet (Annunciate "Source Range High Flux Level at Shutdown")

TABLE 7.6-2

INTERMEDIATE RANGE

Signal and Source	Destination and/or Function
1. Isolation Amplifier (See Figure 7.6-3)	Auxiliary Channel Start Up Rate (SUR) Remote Meter (% Power) Remote Recorder Computer
2. Bistable Amplifiers	Relay Rack (Spare) RPS Relay Rack (Intermediate Range Permissive P-6) Miscellaneous Process Relay Rack (Intermediate Range Rod-Stop) RPS Relay Rack (Intermediate Range Reactor Trip) NSSS Annunciator Relay Cabinet (Annunciate "Source and Intermediate Range Malfunction and/or Test")
3. Trip Bypass	RPS Relay Rack (Block of Rod-Stop and Intermediate Range Reactor Trip)
4. Test-Calibrate	NSSS Annunciator Relay Cabinet (Annunciate "NIS Channel Test")

TABLE 7.6-3 (1 of 2)

POWER RANGE

Signal and Source	Destination and/or Function
1. Isolation Amplifier (Ion Chamber A)	
a. 0 to 10 Vdc	Upper Flux Comparator
b. 0 to 5 Vdc	Computer
c. 0 to 1 mAdc	Remote Meter (Delta Flux)
d. 0 to 5 Vdc	Remote Recorder
e. 0 to 50 mVdc	Spare
2. Buffer Amplifier (Ion Chamber A)	
a. 0 to 1 Vdc	ΔT Overpower-Overtemperature Compensation
3. Isolation Amplifier (Ion Chamber B)	
a. 0 to 10 Vdc	Lower Flux Comparator
b. 0 to 5 Vdc	Computer
c. 0 to 1 mAdc	Remote Meter (Delta Flux)
d. 0 to 5 Vdc	Remote Recorder
e. 0 to 50 mVdc	Spare
4. Buffer Amplifier (Ion Chamber B)	
a. 0 to 10 Vdc	ΔT Overpower-Overtemperature Compensation
5. Isolation Amplifier (Average Power)	
a. 0 to 10 Vdc	Spare
b. 0 to 5 Vdc	Computer
c. 0 to 1 mAdc	Remote Meter (Percent Full Power)
d. 0 to 50 mVdc	Remote Recorder
e. 0 to 5 Vdc	Spare

TABLE 7.6-3 (2 of 2)

POWER RANGE

Signal and Source	Destination and/or Function
6. Isolation Amplifier (Average Power)	
a. 0 to 10 Vdc	Rod Speed Control
b. 0 to 5 Vdc	Spare
c. 0 to 1 mAdc	Spare
d. 0 to 50 mVdc	Spare
e. 0 to 5 Vdc	Spare
7. Isolation Amplifier (Average Power)	
a. 0 to 5 Vdc	Average Power Comparator
b. 0 to 5 Vdc	Spare
c. 0 to 1 mVdc	Spare
d. 0 to 50 Vdc	Spare
e. 0 to 5 Vdc	Spare
8. Bistable Amplifiers	
a. 115 Vac	Spare
b. 115 Vac	Miscellaneous Process Relay Rack (Overpower Rod Stop)
c. 115 Vac	RPS Relay Rack
d. 115 Vac	RPS Relay Rack (Permissive P-10)
e. 115 Vac	RPS Relay Rack (Permissive P-8)
f. 115 Vac	RPS Relay Rack (Low Range Reactor Trip)
g. 115 Vac	Reactor Protection System Relay Rack (High Range Reactor Trip)
h. 115 Vac	Miscellaneous Process Relay Rack (Annunciate "Power Range Loss of Detector Voltage")
i. 115 Vac	Negative Rate Reactor Trip
j. 115 Vac	Positive Rate Reactor Trip
9. Test-Calibrate (115 Vac)	Miscellaneous Process Relay Rack (NIS Channel Test-Control Room)

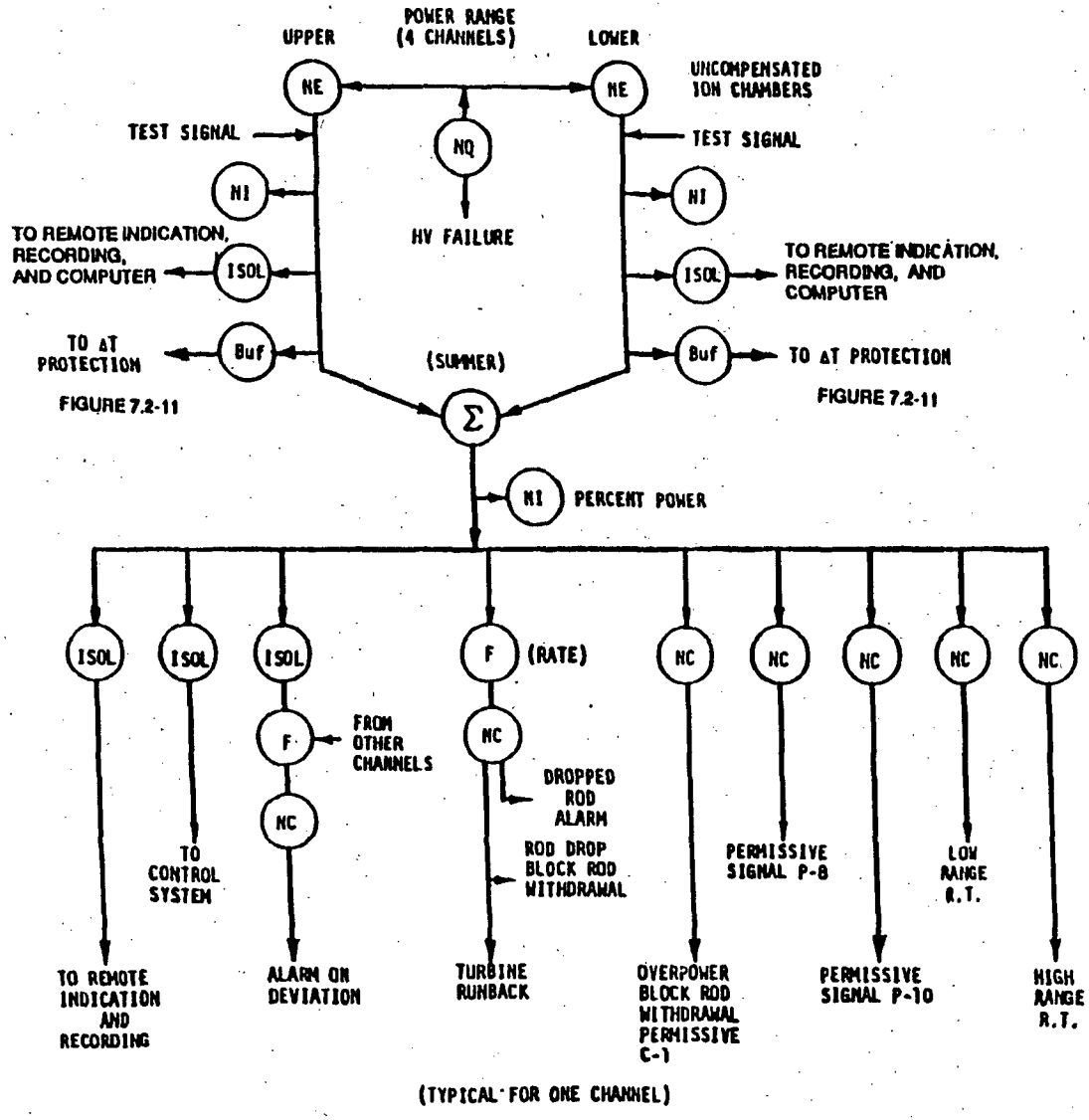

(TYPICAL FOR ONE CHANNEL)

ZION STATION UFSAR

Figure 7.8-1
MAY 1996
POWER RANGE
NUCLEAR INSTRUMENTATION
SYSTEM

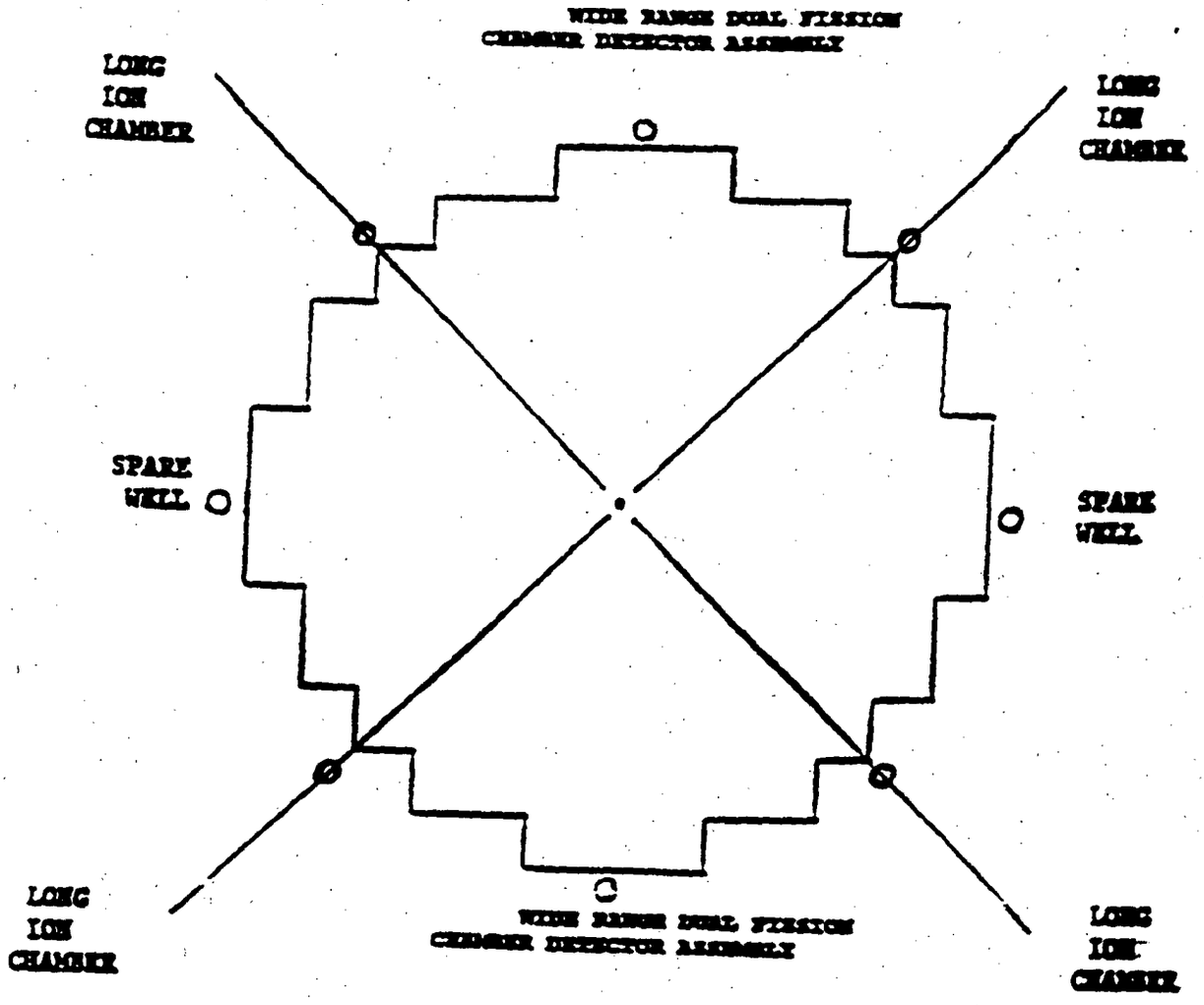

ZION STATION UFSAR

Figure 7.8-2

PLAN VIEW INDICATING DETECTOR LOCATION RELATIVE TO CORE

MAY 1996

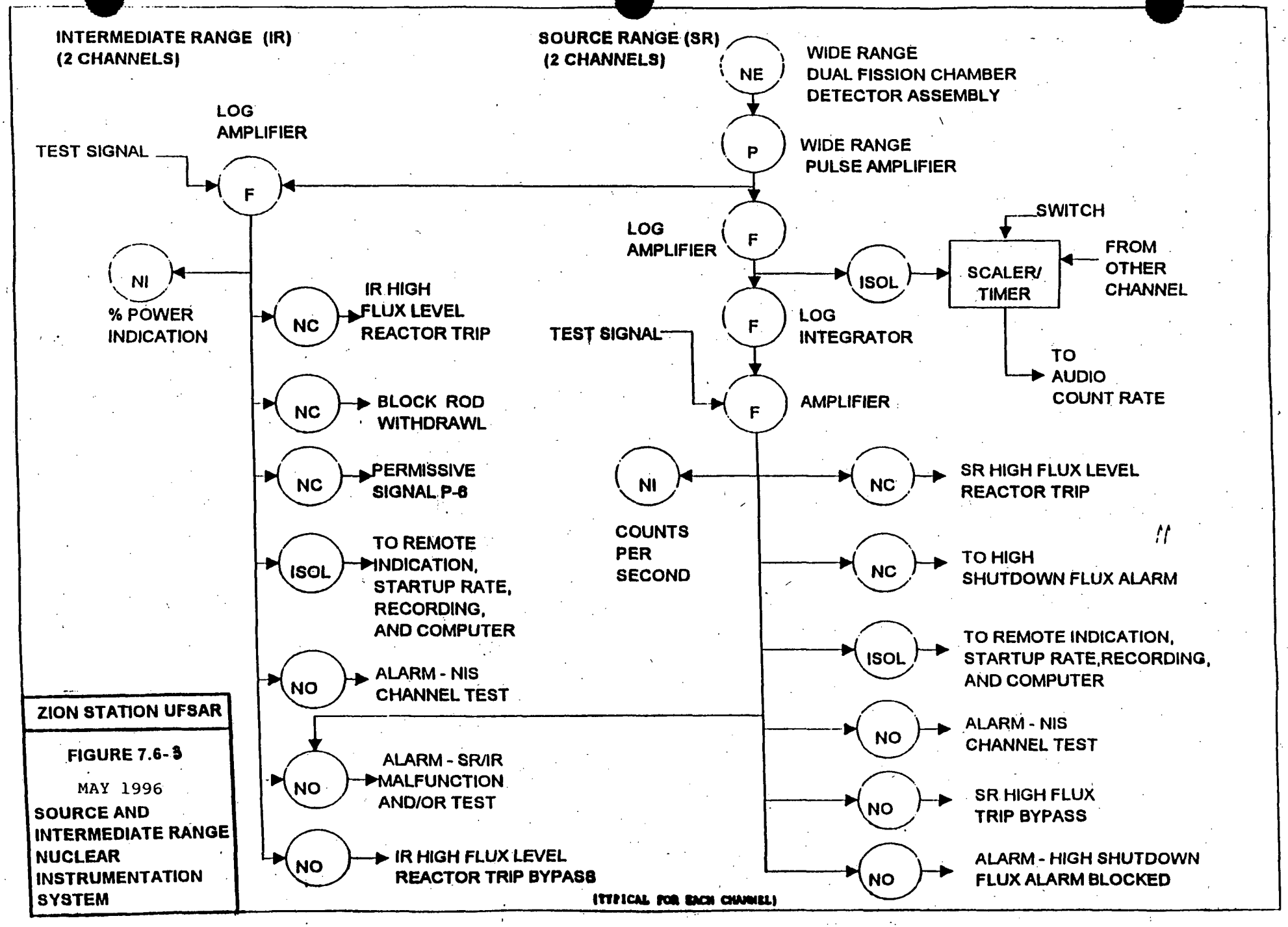

ZION STATION UFSAR

FIGURE 7.6-3

MAY 1996

SOURCE AND INTERMEDIATE RANGE NUCLEAR INSTRUMENTATION SYSTEM

7.7 CONTROL SYSTEMS NOT REQUIRED FOR SAFETY

7.7.1 Description

7.7.1.1 Reactor Control System

The Reactor Control System is designed to reduce nuclear plant transients for the design load perturbations, so reactor trips will not occur for these load changes.

Overall reactivity control is achieved by the combination of chemical shim and rod cluster control assemblies (RCCAs). Long-term regulation of core reactivity is accomplished by adjusting the concentration of boric acid in the reactor coolant. Short-term reactivity control for power changes is accomplished by moving RCCAs.

The function of the Reactor Control System is to provide automatic control of the RCCAs during power operation of the reactor. The system uses input signals including neutron flux, coolant temperature, and turbine load. The Chemical and Volume Control System (CVCS), discussed in Section 9.3.4, supplements the Reactor Control System by the addition and removal of varying amounts of boric acid solution.

No provision is provided for a direct, continuous visual display of primary coolant boron concentration. Boron concentration changes are implemented and confirmed in a slow process. When the reactor is critical, there is a relationship between the position of the rod control group, power, and the average coolant temperature. There is a direct relationship between control rod position and power which establishes the lower insertion limit calculated by the rod insertion limit monitor. There are two alarm setpoints to alert the operator to take corrective action in the event a control group approaches or reaches its lower limit.

Any unexpected change in the position of the control group under automatic control, or a change in coolant temperature under manual control, provides a direct and immediate indication of a change in system operation. In addition, periodic samples are taken for determination of the coolant boron concentration. During core life, reactor fuel (core) depletion results in a reduction of coolant boron concentration for the same power level.

The Reactor Control System is designed to enable the reactor to follow load changes automatically when the output is above approximately 15% of nominal power. Control rod positioning may be performed automatically when plant output is above this value, and manually at any time.

The operator is able to select any single bank of rods for manual operation. This is accomplished with a multiposition switch, so more than one bank may not be selected. Automatic or manual reactor control may also be selected, in which case the control banks can be moved only in their

normal sequence with some overlap. As one bank reaches a preset limit near the full withdrawal position, the next bank begins to withdraw.

The system enables the reactor to accept a step load increase of 10% and a ramp increase of 5% per minute within the load range of 15% to 100% without reactor trip, subject to possible xenon limitations. Similar step and ramp load reductions are possible within the range of 100% to 15% of nominal power. The Steam Dump System, in conjunction with RCCA insertions, permits the plant to accept 50% load reduction (40% to turbine bypass, 10% to rods) without reactor or turbine trip.

The control system is capable of restoring coolant average temperature to within the programmed temperature deadband following a scheduled or unexpected change in load.

The pressurizer water level is programmed to be a function of the auctioneered average coolant temperature. This is to minimize the requirements on the CVCS and the Waste Disposal System (WDS) resulting from coolant density changes during loading and unloading from full power to zero power.

7.7.1.1.1 System Design

The Reactor Control System is designed to provide stable system control over the full range of automatic operation throughout core life without requiring operator adjustment of setpoints other than normal calibration.

A simplified block diagram of the Reactor Control System is shown in Figure 7.7-1 and is functionally identical for all Westinghouse plants. The Reactor Control System controls the reactor coolant average temperature by regulation of control bank rod position. The system is capable of restoring reactor coolant average temperature to the programmed value following a change in load. The programmed coolant average temperature increases linearly from zero power to full power.

The Reactor Control System will also initially compensate for reactivity changes caused by fuel depletion and/or xenon transients. Long-term compensation for these two effects is periodically made by adjustments of the boron concentration to return the rod control bank to its normal operating range.

The reactor coolant loop average temperatures are determined from hot-leg and cold-leg measurements in each reactor coolant loop. The error between the programmed average temperature and the highest of the measured average temperatures from each of the reactor coolant loops is the primary control signal to the Rod Control System, as shown on Figure 7.7-1. An additional control input signal is derived from the reactor power versus turbine load mismatch signal. This additional control input signal improves system performance by enhancing response and reducing transient peaks. The rod

direction command signals are derived from these input signals. The rod speed command signal varies over the corresponding range of 3.75 to 45 inches per minute, depending on the magnitude and the rate of change of the input signals. The rod direction command signal is determined by the positive or negative value of the temperature difference signal. The rod speed and rod direction command signals are fed to the Rod Control System.

7.7.1.1.1.1 Rod Control

There are 53 RCCAs, all of which are full length. They are divided into four shutdown banks and four control banks. There is a total of 24 RCCAs in the shutdown banks. The four control banks contain a total of 29 RCCAs. The control banks are the only rods that can be manipulated under automatic control. There is individual position indication for each RCCA Assembly. All RCCAs have the same magnetically induced lift mechanism. See Section 4.5.1.

7.7.1.1.1.1.1 Control Group Rod Control

The Rod Control System automatically maintains the coolant average temperature by adjusting the positions of the RCCAs.

The Reactor Control System is capable of restoring programmed average temperature following a change in load. The coolant average temperature increases linearly from zero power to full power.

The control RCCAs are divided into several banks and each bank is divided into two groups. They follow load changes over the full range of power operation and to obtain smaller incremental reactivity changes per step. All RCCAs in a group are electrically paralleled to move simultaneously. Each group in a bank is driven by the same variable speed rod drive control unit which moves the groups sequentially one step at a time. All groups are maintained within one step of each other by this drive. The sequence of motion is reversible; the withdrawal sequence is the reverse of the insertion sequence. The variable speed sequential rod control can insert a small amount of reactivity at low speed to control reactor coolant average temperature over a small temperature deadband.

The sequencing speed is proportional to the control signal from the Reactor Control System. This provides control bank speed control proportional to the demand signal from the control system. A rod drive mechanism control center receives sequenced signals from the programmer and to actuate switches in series with the coils of the rod drive mechanism. Two reactor trip breakers are placed in series with the power supply for the coils. To permit on-line testing, a bypass breaker is provided across each of the two trip breakers.

Manual control is provided to move a control bank in or out at a preselected fixed speed. Up to 15% power, the rods are under manual

control. The rod control banks used for automatic control are interlocked with measurements of turbine impulse chamber pressure to prevent automatic control rod withdrawal below 15% of nominal power (C-5 on Table 7.1-1). The manual and automatic controls are further interlocked with measurements of nuclear flux and ΔT indication to prevent approach to an overpower condition (C-2, C-3, and C-4 on Table 7.1-1). When the reactor power reaches approximately 15%, the operator may select the AUTOMATIC position, where the IN-HOLD-OUT control is out of service and rod motion is controlled by the Reactor Control System and the Reactor Protection System. In the AUTOMATIC position, the rods are withdrawn (or inserted) in a predetermined, programmed sequence by the automatic programming equipment.

Programming is set so that as the first bank out reaches a preset position near the top of the core, the second bank out begins to move out simultaneously with the first bank. This staggered withdrawal sequence continues until the unit reaches the desired power level. The programmed insertion sequence is the opposite of the withdrawal sequence, i.e., the last control bank out is the first control bank in.

7.7.1.1.1.1.2 Shutdown Group Rod Control

The shutdown banks, together with the control banks, are capable of bringing the reactor to the hot shutdown condition. The shutdown banks are used in conjunction with the adjustment of chemical shim and the control banks to provide shutdown margin of at least 1% following reactor trip with the most reactive control rod in the fully withdrawn position for all normal operating conditions. The shutdown groups are manually controlled during normal operation and are moved at a constant speed. Any reactor trip signal causes them to fall into the core. They are fully withdrawn during power operation and are withdrawn first during startup. Criticality is always approached with the control groups after withdrawal of the shutdown groups.

7.7.1.1.1.2 Rod Cluster Control Assembly Power Supply

The power for the entire complement of full length control and shutdown rod drive mechanisms is provided by a system composed of two ac motor-generator sets. The sets consist of squirrel cage induction motors driving synchronous alternators.

The total capacity of the system, including the overload capability of each motor-generator set, is such that a single set out of service does not cause limitations in rod motion during normal plant operation. In order to minimize reactor trip as a result of a unit malfunction, the power system is normally operated with both units in service.

Figure 7.7-2 shows the power supply to the rod control equipment and control rod drive mechanisms. The power supply connections from the reactor trip breakers to the rod control equipment are in protective

Flywheels on the motor-generator sets and high speed regulators in each unit enable the rods to ride through a complete loss of ac power for one second during electrical transients.

7.7.1.1.1.3 Rod Cluster Control Assembly Position Indication

Two separate systems, analog and digital, are provided to sense and display control rod position. The digital and analog systems are separate systems; each serves as backup for the other. Operating procedures require the reactor operator to compare the digital and analog readings upon recognition of any apparent malfunction. Therefore, a single failure in rod position indication does not in itself lead the operator to take erroneous action in the operation of the reactor.

7.7.1.1.1.3.1 Analog System (actual position)

An analog signal is generated by measuring the position of each RCCA. This is accomplished by means of a linear position transmitter. An electrical coil stack is placed above the stepping mechanisms of the control rod magnetic jacks external to the pressure housing. When the associated control rod is at the bottom of the core, the magnetic coupling between a primary and secondary is small and there is a small voltage induced in the secondary. As the control rod is raised by the magnetic jacks, the relatively high permeability of the lift rod causes an increase in magnetic coupling. Thus, an analog signal proportional to rod position is obtained.

Direct readout of every RCCA position is presented to the operator by digital display indication without need for operator selection or switching to determine rod position. (See Figure 7.7-3)

In addition, the individual analog rod position signals can be fed to the plant computer for readout. A deviation monitor alarm is actuated by the computer if any two rods in a bank differ in their measured positions by a preselected amount or more when the rods are not moving and double this amount when the rods are moving. A rod malposition check is also performed once per shift as per Technical Specification requirements. An alarm is also provided to indicate when any shutdown rod has left its fully withdrawn position.

Lights are provided for rod bottom positions for each full length rod. The lights are operated by bistable devices in the analog system. A test button on the main control board allows the operator to actuate these lights with rods withdrawn, so that in the event of a reactor trip, the operator will not mistake a burned out bulb for a stuck rod.

7.7.1.1.1.3.2 Digital System (demand position)

The digital system counts pulses generated in the control rod drive system programmer. One counter is associated with each group of RCCAs. Readout of the digital system is in the form of electromechanical add-subtract counters reading the number of steps of demanded rod position with one display for each group. These readouts are mounted on the control panel.

alarm is also provided to indicate when any shutdown rod has left its fully withdrawn position.

Lights are provided for rod bottom positions for each full length rod. The lights are operated by bistable devices in the analog system. A test button on the main control board allows the operator to actuate these lights with rods withdrawn, so that in the event of a reactor trip, the operator will not mistake a burned out bulb for a stuck rod.

7.7.1.1.1.3.2 Digital System (demand position)

The digital system counts pulses generated in the control rod drive system programmer. One counter is associated with each group of RCCAs. Readout of the digital system is in the form of electromechanical add-subtract counters reading the number of steps of demanded rod position with one display for each group. These readouts are mounted on the control panel.

7.7.1.1.1.4 Rod Deviation Indication

The demand and actual rod position signals are displayed on the control console. They are also monitored by the plant computer which provides a visual printout and an audible indication whenever an individual rod position signal deviates from the bank demand signal by a preset limit. Figure 7.7-4 is a block diagram of the Rod Deviation Comparator and Indication System. The design criterion for this system is that the indicator be actuated before rod deviation occurs. This design prevents the core design hot channel factors from being exceeded, with due allowance for instrument error in the rod position indication channel and the linear variable differential transformer.

7.7.1.1.1.5 Primary System Pressure and Level Control

7.7.1.1.1.5.1 Reactor Coolant System Pressure Control

The Reactor Coolant System (RCS) pressure is maintained at constant value by using either the heaters (in the water region) or the spray (in the steam region) of the pressurizer. The electrical immersion heaters are located near the bottom of the pressurizer. A portion of the heater groups are proportional heaters which are used to control small pressure variations. These variations are due to heat losses, including heat losses due to a small continuous spray. The remaining (backup) heaters are turned on when the pressurizer pressure controller signal is below a given value.

The spray nozzles are located on the top of the pressurizer. Spray is initiated when the pressure controller signal is above a given setpoint. The spray rate increases proportionally with increasing pressure until it reaches a maximum value. Steam condensed by the spray reduces the pressurizer pressure. A small continuous spray is normally maintained to

reduce thermal stresses and thermal shock to the nozzle and to help maintain uniform water chemistry and temperature in the pressurizer.

Two power-operated relief valves limit system pressure for large load reduction transients and provide low temperature overpressure protection.

Spring-loaded safety valves limit system pressure in the unlikely event that a complete loss of load should occur without direct reactor trip or turbine bypass.

7.7.1.1.1.5.2 Pressurizer Level Control

The water inventory in the RCS is maintained by the CVCS. During normal plant operation, the pressurizer level is controlled by the charging flow controller which controls the positive displacement charging pump speed, or the charging flow control valve for the centrifugal charging pumps, to produce the flow demanded by the pressurizer level controller. At least one charging pump runs continuously to balance letdown flow into the CVCS. The pressurizer water level is programmed as a function of coolant average temperature. The pressurizer water level decreases as the load is reduced from full load. This is the result of coolant contraction following programmed coolant temperature reduction from full power to low power. The programmed level is designed to match as nearly as possible the level changes resulting from the coolant temperature changes. To permit manual control of pressurizer level during startup and shutdown operations, the charging flow can be manually regulated from the Main Control Room.

7.7.1.1.1.6 Secondary System Control

The Secondary System includes the steam from the steam generators and the Condensate and Feedwater Systems, which are discussed in Chapter 10.

7.7.1.1.1.6.1 Steam Dump

The purpose of the Steam Dump System is to reduce RCS transients following a substantial turbine load reduction by bypassing main steam directly to the condenser. This maintains an artificial load on the steam generators. The Reactor Control System can then reduce the reactor temperature to a new equilibrium value without causing overtemperature and/or overpressure conditions.

The Steam Dump System is designed to relieve steam from the steam generators to the condenser to reduce the sensible heat in the primary system in the event of load reduction not exceeding 50%. The steam dump capacity is 40% of full load steam flow at full load steam pressure. All steam dump steam flows to the main condenser via the bypass lines.

When a load rejection occurs, if the difference between the required temperature setpoint of the RCS and the actual average temperature exceeds

a predetermined amount, a signal is generated. This signal will actuate the steam dump to maintain the RCS temperature within control range until a new equilibrium condition is reached.

The steam dump flow reduces proportionally as the control rods act to reduce the average coolant temperature. The artificial load is therefore removed as the coolant average temperature is restored to its programmed equilibrium value.

The required number of steam dump valves stroke full open or modulate, depending upon the magnitude of the temperature error signal resulting from loss of load. The dump valves can be modulated closed after they are full open by the reactor coolant average temperature mismatch signal.

Following a reactor and turbine trip, decay heat and sensible heat stored in the reactor coolant are removed without actuating the steam generator safety valves by means of controlled steam dump to the condenser and by injection of feedwater to the steam generators. RCS temperature is reduced to the no load conditions. This no load coolant temperature is maintained by steam dump to the condensers which removes residual heat.

7.7.1.1.1.6.2 Steam Generator Water Level Control

Each steam generator is equipped with a three-element feedwater controller (see Figure 7.2-10) which maintains a programmed water level as a function of load on the secondary side of the steam generator. The three-element feedwater controller regulates the feedwater valve by continuously comparing the feedwater flow signal, the water level signal and the pressure compensated steam flow signal. The steam generators are operated in parallel.

Continued delivery of feedwater to the steam generators is required as a sink for the heat stored and generated in the reactor coolant following a reactor trip and turbine trip. An override signal closes the feedwater valves when the average coolant temperature is below a given temperature or when the respective steam generator level rises to a given value.

Following a turbine trip, the feedwater regulating valves are closed on occurrence of low T_{avg}. Local manual override of the feedwater control system is available at all times.

7.7.1.1.1.6.3 Feedwater Pump Speed Control

The speed of the two turbine-driven feedwater pumps is automatically controlled to maintain a programmed pump discharge pressure in relation to steam pressure. The motor-driven pump has a similar discharge pressure control using a valve. Measured steam flow is used to provide a

differential pressure setpoint which increases as steam load increases. Feedwater pressure is then controlled to this value above steam pressure. The net effect is both a reduction in required pumping power and reduced service requirements for the feedwater valve design at less than full load operation of the plant.

7.7.1.1.1.6.4 Feedwater Vernier Bypass Valves

Small bypass valves (one per main feedwater valve) are provided for use during startup and shutdown operations using the motor-driven feedwater pump or one of the turbine-driven pumps at constant speed. Alternately, the main feedwater valves may be used for these operations when the turbine-driven pump is available and the speed is turned down to provide a low valve differential pressure. The vernier bypass valves are provided with an override on high steam generator level to shut them.

7.7.1.2 Incore Instrumentation

7.7.1.2.1 Design Basis

The incore instrumentation is designed to yield information on the neutron flux distribution and fuel assembly outlet temperatures at selected core locations. Using the information obtained, it is possible to confirm some of the reactor core design parameters. The instrumentation provides means for acquiring data only, and performs no operational plant control.

7.7.1.2.2 System Design

7.7.1.2.2.1 General

The incore instrumentation consists of 65 thermocouples, positioned at preselected locations, and 57 flux thimbles, which run the length of selected fuel assemblies to measure the neutron flux distribution within the reactor core. Incore guide tube location P-4 has been sacrificed for the Reactor Vessel Level Indication System.

The experimental data obtained from the incore temperature and flux distribution instrumentation, in conjunction with previously determined analytical information, can be used to determine the fission power distribution in the core at any time throughout core life. This method is more accurate than using calculational techniques alone. Once the fission power distribution has been established, the maximum power output is primarily determined by thermal power distribution and the maximum core capability is determined by the thermal and hydraulic limitations.

The incore instrumentation provides information which may be used to calculate the coolant enthalpy distribution and the fuel burnup distribution and to estimate the coolant flow distribution.

Both radial and azimuthal symmetry of power distributions may be evaluated by comparing the detector and thermocouple information from one quadrant with similar data obtained from the other three quadrants.

7.7.1.2.2.2 Thermocouples

The Core Exit Thermocouple (CET) System has been upgraded to safety-related to comply with Regulatory Guide 1.97 requirements. Therefore, CETs are discussed in Sections 7.5.1.1.2 and 7.5.2.1.2.

7.7.1.2.2.3 Flux Mapping System

7.7.1.2.2.3.1 Mechanical Configuration

Miniature neutron flux detectors, remotely positioned in the core, provide remote readout for flux mapping. The basic system for the insertion of these detectors is shown in Figures 7.7-5 and 7.7-6. Retractable thimbles, into which the miniature detectors are driven, are pushed into the reactor core through thimble guide tubes that extend from the bottom of the reactor vessel down through the concrete shield area, then to a thimble seal table. The thimbles are closed at the leading ends, are dry inside, and serve as the pressure barrier between the reactor water pressure and the atmosphere. Mechanical seals between the retractable thimbles and the thimble guide tubes are provided at the seal table.

During reactor operation, the retractable thimbles are stationary. They are extracted downward from the core during the refueling to avoid interference within the core. A space above the seal table is provided for the retraction operation.

The drive system for the insertion of the miniature detectors consists of six combinations of drive assemblies, five-path rotary transfer devices, and ten-path rotary transfer devices, as shown in Figure 7.7-6. The drive system pushes hollow helical-wrap drive cables into the core. Miniature detectors are attached to the leading ends of the cables and small diameter sheathed coaxial cables are threaded through the hollow centers back to the ends of the drive cables. Each drive assembly consists of a gear motor which pushes a helical-wrap drive cable and detector through a selective thimble path by means of a special drive box which includes a storage device that accommodates the total drive cable length. Further information on mechanical design and support is provided in Chapter 4.

7.7.1.2.2.3.2 Control and Readout Description

The Control and Readout System provides means to rapidly traverse the miniature neutron detectors to and from the reactor core at 72 feet per minute, and to traverse the reactor core at 12 feet per minute, while plotting the thermal neutron flux versus detector position. The control system consists of two sections: one physically mounted with the drive units and the other contained in the Control Room. Limit switches in each tubing run provide signals to the path display to indicate the active detector path during the flux mapping operation. Each gear box drives an encoder for position indication. One five-path group path selector is provided for each drive unit to route the detector into one of the flux thimble groups or to storage. A ten-path rotary transfer assembly is used to route a detector into any one of up to ten selectable thimbles. Provisions have been made to separately route each detector into a common flux thimble to permit cross calibration of the detectors.

Manually operated isolation valves on each thimble allow free passage of the detector and drive cable when open. When closed, these valves prevent steam leakage from the core in case of a thimble rupture. The detector drive cable should be retracted to a position above the isolation valve prior to closing the valve. However, in the event a detector were to stick in a ruptured guide thimble, it may be possible to close the isolation valve and sever the drive cable.

A small leak would probably not prevent access to the isolation valve. Thus, the leaking thimble could be isolated during hot shutdown. A large leak might require cold shutdown for access to the isolation valve.

The Control Room contains the necessary equipment for control, position indication and flux recording. Panels are provided to indicate the position of the detectors and for plotting the flux level versus the detector position. Additional panels are provided for such features as drive motor controls, core path selector switches and plotting and gain controls. A "flux-mapping" operation consists of selecting (by panel switches) flux thimbles in given fuel assemblies at various core locations. The detectors are driven to the top of the core and stopped automatically. An x-y plot (position versus flux level) is initiated with the slow withdrawal of the detectors through the core from the top to a point below the bottom. In a similar manner, other core locations are selected and plotted.

Each detector provides axial flux distribution data along the center of a fuel assembly. Various radial positions of detectors are then compared to obtain a flux map for a region of the core.

THIS PAGE INTENTIONALLY LEFT BLANK

THIS PAGE INTENTIONALLY LEFT BLANK

7.7.1.3 Economic Generating Control

7.7.1.3.1 Design Basis

The Economic Generating Control (EGC) System is designed to aid the System Power Supply Office (SPSO) in controlling generator output while limiting dispatcher control of the turbine generator. The reactor operator will set the maximum load swing capability with a controlled ramp rate for the SPSO to work with. This will allow the most effective use of the Commonwealth Edison Company's System Generating facilities while retaining ultimate control of the unit with the operator.

7.7.1.3.2 System Design

The EGC System provides the load dispatcher with a measure of output control, allowing improved frequency regulation and improved generating economics. A primary computer at the SPSO will be used to determine the load on the electrical distribution system, to determine the amount currently being generated by the system, and to utilize the most cost effective generating units to supply the demand. A backup computer is available if the primary computer fails. The backup system will only measure supply and demand. It does not use fuel cost for determining plant utilization. The EGC System uses the Microwave System to receive pulses from the SPSO computers. The EGC System will be disabled (control terminated) on a loss of the Microwave System.

The EGC System is essentially a remotely controlled adjustment to the reference load setpoint of the Electro-hydraulic Control (EHC) System. The EHC System controls turbine speed and generator power output by automatic adjustment of the turbine governor valve position and controls load by comparison of impulse stage pressure, turbine speed, and reference load setpoints. Under normal operations without EGC, the control room operator adjusts plant load by manually altering the reference load setpoint and selecting the rate of load change.

The EGC System is able to alter the reference load setpoint (within preset limits) without operator intervention, unless desired. There are two available methods for setting the EGC System. First, a maximum rate of load change can be set by the operator within the limits of 0.5 MWe/minute to 3 MWe/minute. This will allow the SPSO to vary load within this established limit. A second method involves the operator selecting a programmed raise or lower load change. By selecting this method, a preset rate of 3 MWe/minute will be established.

The EGC System does not have the ability to effect changes in boron concentration or start additional equipment, therefore, restrictions on its use are required. The primary difference between load control with and without EGC in operation is that in EGC control, power changes are automatic and, therefore, require certain initial conditions and limits of operation in order to operate properly and efficiently. For example, a prerequisite of EGC operation requires that the controlling RCCA bank be positioned properly to meet rod insertion limits.

7.7.1.4 Operating Control Stations

7.7.1.4.1 General Layout

The operating control stations consist of the Main Control Room for centralized control of both Units 1 and 2 during startup, normal, shutdown, and emergency operations; and local stations for hot shutdown capability and for the normal operation of the Radioactive Waste System and miscellaneous noncritical systems. Control functions necessary to maintain safe conditions after a LOCA can be initiated from the Control Room, although many of these are initiated automatically. Essential equipment safeguards functions can be controlled and monitored at locations other than the Main Control Room.

7.7.1.4.2 Design Basis

7.7.1.4.2.1 Control Room Design

The plant is equipped with a Control Room which contains those controls and instrumentation necessary for operation of the reactor and turbine generator under normal and accident conditions. The Control Room is continuously occupied by qualified operating personnel under all operating and design basis accident (DBA) conditions.

Sufficient shielding, distance, and containment integrity are provided to assure that personnel in the Control Room are not subjected to doses during postulated accident conditions which would exceed limits in 10CFR100. The control room ventilation consists of a system having a large percentage of recirculated air. The fresh air intake will be closed automatically to stop the intake of airborne activity if monitors indicate that such action is appropriate.

The main control panel for each unit is a totally enclosed walkin panel, which is located in the plant Main Control Room. The front portion is a duplex bench board which contains the operating controls. The rear portion consists of instrument racks containing power supplies, amplifiers, relays, etc., for the radiation monitoring and miscellaneous plant control systems. The front operating bench boards are arranged functionally in three main sections as follows:

1. Center Section-Reactivity control, Primary Coolant System control, and CVCS.

2. Left Section-Residual Heat Removal System, Component Cooling Water System, Service Water System and Engineered Safety Features (ESF) Systems (safety injection, Containment spray, Containment fan coolers, Containment isolation and penetration pressurization, and Auxiliary Feedwater System).

3. Right Section - Main turbine and generator, diesel generators, circulating water, extraction steam, condensate, and main feedwater controls. The 345-kV switchyard controls are located on a vertical panel near the center of the Main Control Room.

The ESF control board is generally arranged so as to present the individual trains of each ESF System in a functional grouping. This is accomplished by grouping controls and instruments for a given train in a vertical array on the board insofar as is practical. This permits the operator to quickly ascertain the status of a given train. Since the trains are physically adjacent, the operator can establish overall system status at a glance. Indications of "Out Of Service" components are provided by individual component monitor lights, "Out Of Service" tags placed on the component controls by the operators, and by selected information presented on the safeguards annunciator.

These measures are backed up by entries in the control room log book which indicate when a component is taken out of service. Each control room operator, when coming on duty, reviews the log, further assuring that the operator is aware of the status of the plant.

Heating, ventilating, and air conditioning controls are on a vertical panel near the center of the Main Control Room. This panel has a vertical division plate between Unit 1 and Unit 2 controls.

A separate general services control panel located near the center of the Main Control Room contains controls for the following systems common to both Units 1 and 2:

1. Service Air,
2. Condensate Makeup,
3. Service Water Booster,
4. Primary Water,
5. Fire Protection,
6. Water Box and Condenser Evacuation Vacuum, and
7. Instrument Air.

The primary objectives in the control room layout are to provide the necessary controls to start, operate, and shut down the units with sufficient information and alarm monitoring provided, thus ensuring safe

and reliable operation under normal and accident conditions. Special emphasis will be given to maintaining control integrity during accident conditions. The layout of the ESF section of the control board will be designed to minimize the time required for the operator to evaluate the system performance under accident conditions. Deviations from predetermined conditions will be alarmed, so the operator may take corrective action using the controls provided on the control panel.

7.7.1.4.2.2 Annunciator and Audible Alarm System

A visual annunciator system with audible signals is provided to alert the operator to offnormal conditions requiring corrective action. The back lighted alarm windows are located across the entire top section of the main control board. The annunciator power is supplied from the Station 125-Vdc Power Supply System. Two feeds from the same 125-Vdc bus with manual throwover provisions to either of the two feeds is provided.

"First-out" annunciators are provided for the reactor and turbine panels to aid in analyzing the source of plant trips. A portion of the alarms are recorded on the computer to provide a permanent record and sequence of events to aid in analyzing plant trips and operational upsets.

Audible Containment evacuation alarms are initiated manually by the operator.

Audible alarms will be sounded in appropriate areas throughout the plant if high radiation conditions are present.

7.7.1.4.3 Fire Prevention Design

All materials of construction used in the Control Room are noncombustible. Electrical wiring is flame-resistant as proven by the vertical flame test described in the Insulated Power Cable Engineer's Association (IPCEA) Publications and American Society for Testing and Materials (ASTM) D470-64T.

The Fire Protection and Detection Systems are discussed in the Fire Protection Report.

7.7.1.4.4 Radwaste System Control Panels

The liquid and solid radwaste, liquid waste evaporator and blowdown demineralizer regeneration control panels are located in an area of the Auxiliary Building common to both units.

These panels contain all the controls and instruments to control and monitor the Radioactive Liquid and Solid Waste Disposal Systems. The waste gas disposal control panel is located in another area of the Auxiliary Building.

7.7.1.4.5 Miscellaneous Local Control Panels

Miscellaneous noncritical systems, such as Makeup Demineralizer, Secondary Plant Water and Steam Sampling, are controlled from local panels and control stations throughout the plant. Off-normal conditions on systems controlled from local panels are alarmed on the local panel annunciators.

Two other local control panels, the remote shutdown panels and the diesel generator control panels, are discussed in the Fire Protection Report and Section 8.3, respectively.

7.7.2 Analysis

7.7.2.1 Control System Design Evaluation

7.7.2.1.1 Unit Stability

The Rod Control System is designed to limit, within acceptable values, the amplitude and the frequency of a continuous oscillation of average coolant temperature about the control system setpoint. A continuous oscillation can be induced by the introduction of a feedback control loop with an effective loop gain which is either too large or too small with respect to the process transient response, i.e., instability induced by the control system itself. Because stability is more difficult to maintain at low power under automatic control, no provisions are made to provide automatic control below 15% of full power.

The control system is designed to operate as a stable system over the full range of automatic control throughout core life.

7.7.2.1.2 Step Load Changes Without Steam Dump

A typical power control requirement is to restore equilibrium conditions, without a trip, following a plus or minus 10% step change in load demand, over the 15% to 100% power range for automatic control. The design must necessarily be based on conservative conditions, and a greater transient

capability is expected for actual operating conditions. A load demand greater than full power is prohibited by the turbine control load limit devices.

The function of the control system is to minimize the reactor coolant average temperature deviation during the transient to within a given value and to restore average temperature to the programmed setpoint within a given time. Excessive pressurizer pressure variations are prevented by using spray and heaters in the pressurizer.

The margin between overtemperature ΔT setpoint and the measured ΔT is of primary concern for the step load changes. This margin is influenced by nuclear flux, pressurizer pressure, reactor coolant average temperature, and temperature rise across the core.

7.7.2.1.3 Loading and Unloading

Ramp loading and unloading of 5% per minute can be accepted over the 15% to 100% power range under automatic control without tripping the plant. The function of the control system is to maintain the coolant average temperature and pressure as functions of turbine-generator load. The minimum control rod speed provides a sufficient reactivity insertion rate to compensate for the reactivity changes resulting from the moderator and fuel temperature changes.

The coolant average temperature increases during loading and causes a continuous insurge to the pressurizer as a result of coolant expansion. The sprays limit the resulting pressure increase. Conversely, as the coolant average temperature is decreasing during unloading, there is a continuous outsurge from the pressurizer resulting from coolant contraction. The heaters limit the resulting system pressure decrease. The pressurizer level is programmed such that the water level is above the setpoint at which the heaters cut out during the loading and unloading transients. The primary concern during loading is to limit the overshoot in average coolant temperature and to provide sufficient margin in the overtemperature ΔT setpoint.

The automatic load controls are designed to safely adjust the unit generation to match load requirements within the limits of the unit capability and licensed rating.

7.7.2.1.4 Loss of Load With Steam Dump

The Reactor Control System is designed to accept a load reduction of 50% or less without a reactor trip or turbine trip. The automatic Steam Dump System, in conjunction with automatic rod control, is able to accommodate this abnormal load rejection and reduce the effects of the transient imposed upon the RCS. The reactor power is reduced at a rate consistent with the capability of automatic rod control to reduce reactor coolant

temperature. Reduction of the reactor power is automatic within the range of 15 to 100% power. The steam dump flow reduction is as fast as RCCAs are capable of inserting negative reactivity.

The pressurizer relief valves might be actuated for the most adverse conditions, e.g., the most negative Doppler coefficient and the minimum incremental rod worth. The relief capacity of the power-operated relief valves is sized large enough to limit the system pressure to prevent actuation of high pressure reactor trip for the above conditions.

7.7.2.1.5 Turbine-Generator Trip With Reactor Trip

Whenever the turbine-generator unit trips at an operating level above 10% power, the reactor also trips. The unit is operated with a programmed average temperature as a function of load, with the full load average temperature significantly greater than the saturation temperature corresponding to the steam generator pressure at the steam generator safety valve setpoint. The thermal capacity of the RCS is greater than that of the Secondary System. Because the full load average temperature is greater than the no load steam temperature, a heat sink is required to remove heat stored in the reactor coolant to prevent actuation of steam generator safety valves for a trip from full power. This heat sink is provided by the combination of controlled release of steam to the condenser and by makeup of cold feedwater to the steam generators.

The Steam Dump System, following a trip, is controlled from the reactor coolant average temperature signal, whose setpoint values are reset upon trip to the no load value. Actuation of the steam dump must be rapid to prevent actuation of the steam generator safety valves. With the dump valves open, the average coolant temperature starts to reduce quickly to the no load setpoint. A direct feedback of temperature acts to proportionally close the valves to minimize the total amount of steam which is bypassed.

Following the turbine trip, the steam voids in the steam generator will collapse and the fully opened feedwater valves will provide sufficient feedwater flow to restore water level in the downcomer. The feedwater flow is cut off when the average coolant temperature decreases below a given temperature value or when the steam generator water level reaches a given high level.

Additional auxiliary feedwater makeup is then controlled manually to restore and maintain steam generator water level while assuring that the reactor coolant temperature is at the desired value. Residual heat removal is maintained by the steam header pressure controller (manually selected) which controls the amount of steam flow to the condensers. This controller operates the same steam dump valves to the condensers which are used during the initial transient following turbine and reactor trip.

The pressurizer pressure and level fall rapidly during the transient because of coolant contraction. The pressurizer water level is programmed to maintain a level following the turbine and reactor trip. If heaters become uncovered following the trip, the CVCS will provide full charging flow to restore water level in the pressurizer. Heaters are then turned on to restore pressurizer pressure to normal.

The Steam Dump and Feedwater Control Systems are designed to prevent the average coolant temperature from falling below the programmed no load temperature following the trip to ensure adequate reactivity shutdown margin.

7.7.2.2 Economic Generating Control Evaluation

The EGC System gives the load dispatcher some control of unit power while allowing the reactor operator to retain ultimate control of the situation.

7.7.2.2.1 Flow Transients

Flow transients consider reductions in RCS flows. In these events, main steam flow rate is assumed at its design values until the reactor trip from low loop flow is reached, at which time main steam flow will drop to zero due to turbine trip. Because the time of turbine operation during the transient is very short and initial conditions are set at their design values, EGC operation is expected to have no effect on these transients.

7.7.2.2.2 Heatup Transients

These transients, including turbine trip, loss of feedwater, station blackout, and feedwater line break events, will not be affected by operation of the EGC System. Turbine trip occurs very early in these transients and the EGC System is of no consequence following turbine trip.

7.7.2.2.3 Loss-of-Coolant Accident Events

These events include the large and small break LOCAs and the steam generator tube rupture events. For the large break LOCAs, turbine trip following reactor trip is assumed to occur very early in the transient; therefore, EGC operation will have minimal effect on the transient. In the small break LOCA events, reactor trip and subsequent turbine trip occurs within approximately 32 seconds of initiation of the event. Again, because of the relatively short length of time the turbine may be operating during the transient, the EGC System will not contribute significantly to this event.

7.7.2.2.4 Reactivity Change Events

This class of transients includes the uncontrolled rod withdrawal, rod ejection, and boron dilution events. During slow reactivity additions, a

reactor power increase would lead to an increased average coolant temperature and would result in an increase in main steam header pressure. To maintain constant impulse pressure under these conditions, the EHC System would act to close the governor valves. In order to maintain generator output, EGC would act to open the governor valves. In these events, plant protection is provided by the overtemperature ΔT protection. A turbine runback would occur, which locks out EGC, prior to plant trip. By locking out EGC during turbine runback, cycling between the runback signal and possible EGC load increases is precluded.

7.7.2.2.5 Cooldown Transients

These transients include the main steamline break events, excessive load increase, and feedwater heater bypass type transients. Postulated EGC failures would produce similar results as a step load increase analysis, such as sudden opening of turbine governor valves. A new potential transient would occur following a loss in turbine efficiency resulting in a decrease in generator output while maintaining turbine steam flow at 100% conditions. An example of this event is failure of an extraction steamline or turbine interstage bypass effects. During this event, the EGC System would attempt to restore generator load and would potentially raise power above 100%. This action is prevented by the EGC System disengaging due to the core limit trip and/or the rate limit trip. If these trips failed, the overtemperature/overpower ΔT turbine runbacks would disengage the EGC.

7.7.2.3 Incore Instrumentation System Evaluation

The thimbles are distributed nearly uniformly over the core, with about the same number of thimbles in each quadrant. The number and location of these thimbles have been chosen to permit measurement of local to average peaking factors to an accuracy of ± 10% (95% confidence). Measured nuclear peaking factors will then be multiplied by an uncertainty factor to allow for possible instrument error. These values are compared with the calculated design peaking factors to assure DNB margin. If the measured power peaking is larger than expected, reduced power capability will be indicated.

Zion Units 1 and 2 have the capability for using fixed incore detectors, if required.

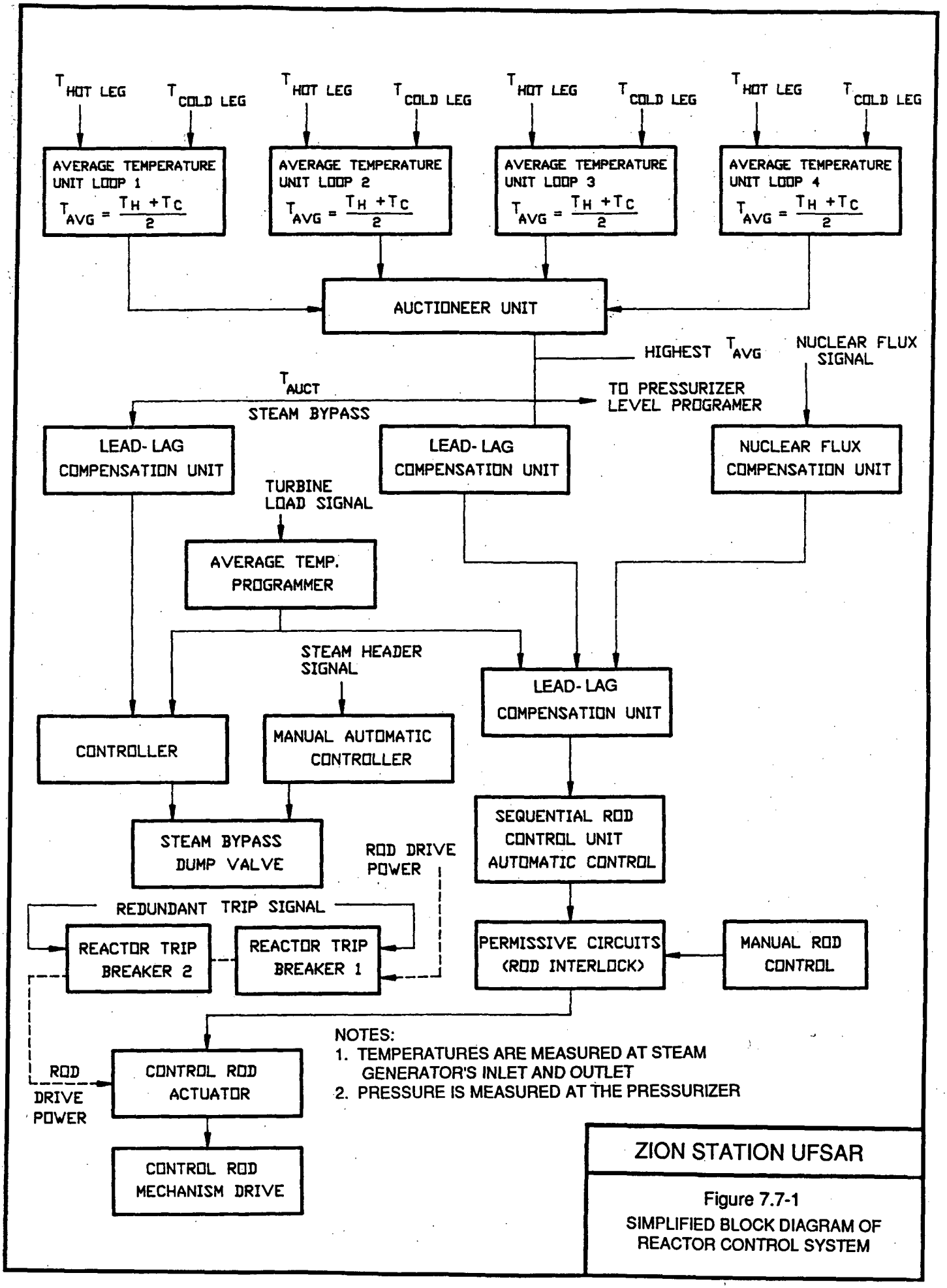

ZION STATION UFSAR

Figure 7.7-1
SIMPLIFIED BLOCK DIAGRAM OF REACTOR CONTROL SYSTEM

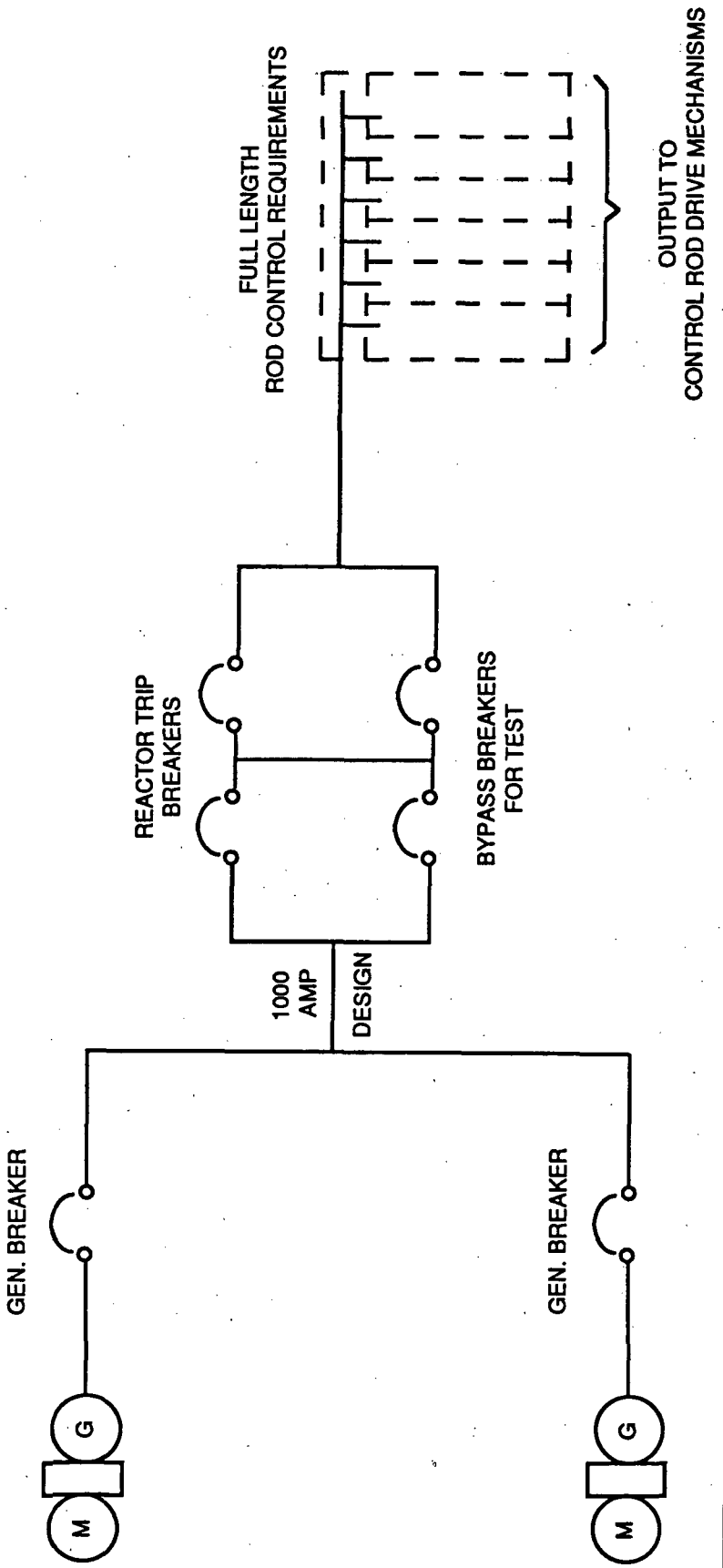

ZION STATION UFSAR

Figure 7.7-2
POWER SUPPLY TO ROD CONTROL EQUIPMENT AND CONTROL ROD DRIVE MECHANISMS

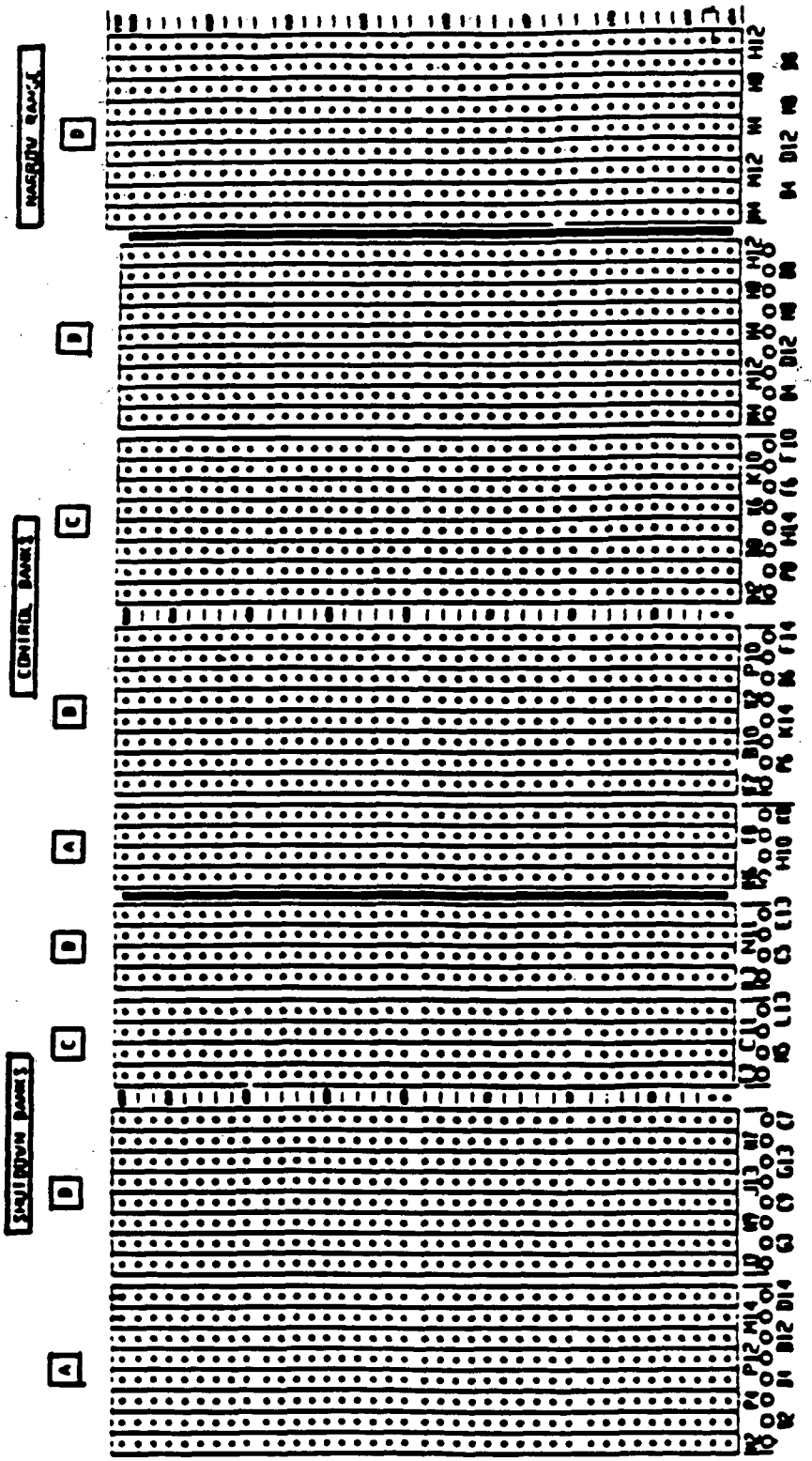

ZION STATION UFSAR

Figure 7.7-3

ROD POSITION INDICATION DISPLAY

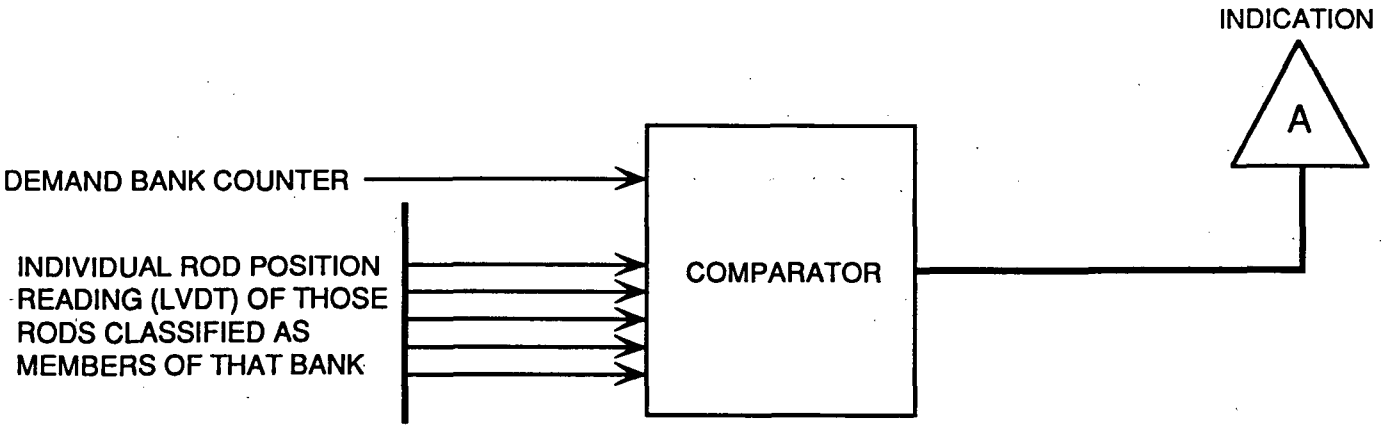

NOTE:

1. DIGITAL OR ANALOG SIGNALS MAY BE USED FOR THE COMPARATOR COMPUTER INPUTS.

2. THE COMPARATOR WILL ENERGIZE THE ALARM IF THERE EXISTS A POSITION DIFFERENCE GREATER THAN A PRESET LIMIT BETWEEN ANY INDIVIDUAL ROD AND THE DEMAND BANK COUNTER.

3. COMPARISON IS INDIVIDUALLY DONE FOR ALL CONTROL BANKS.

ZION STATION UFSAR

Figure 7.7-4

ROD DEVIATION COMPARATOR

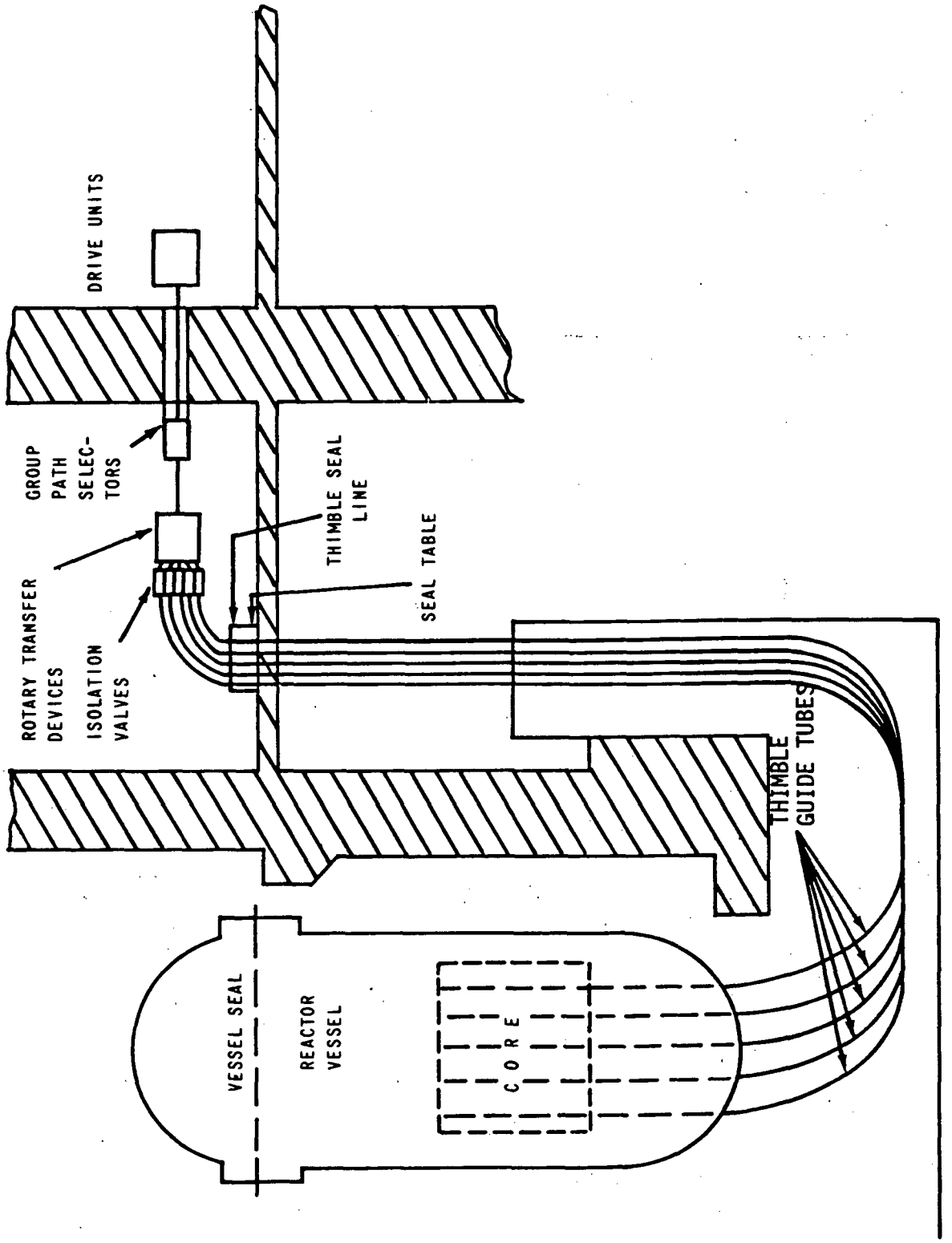

ZION STATION UFSAR

Figure 7.7-5
TYPICAL ARRANGEMENT OF MINIATURE NEUTRON FLUX DETECTOR SYSTEM (ELEVATION VIEW)

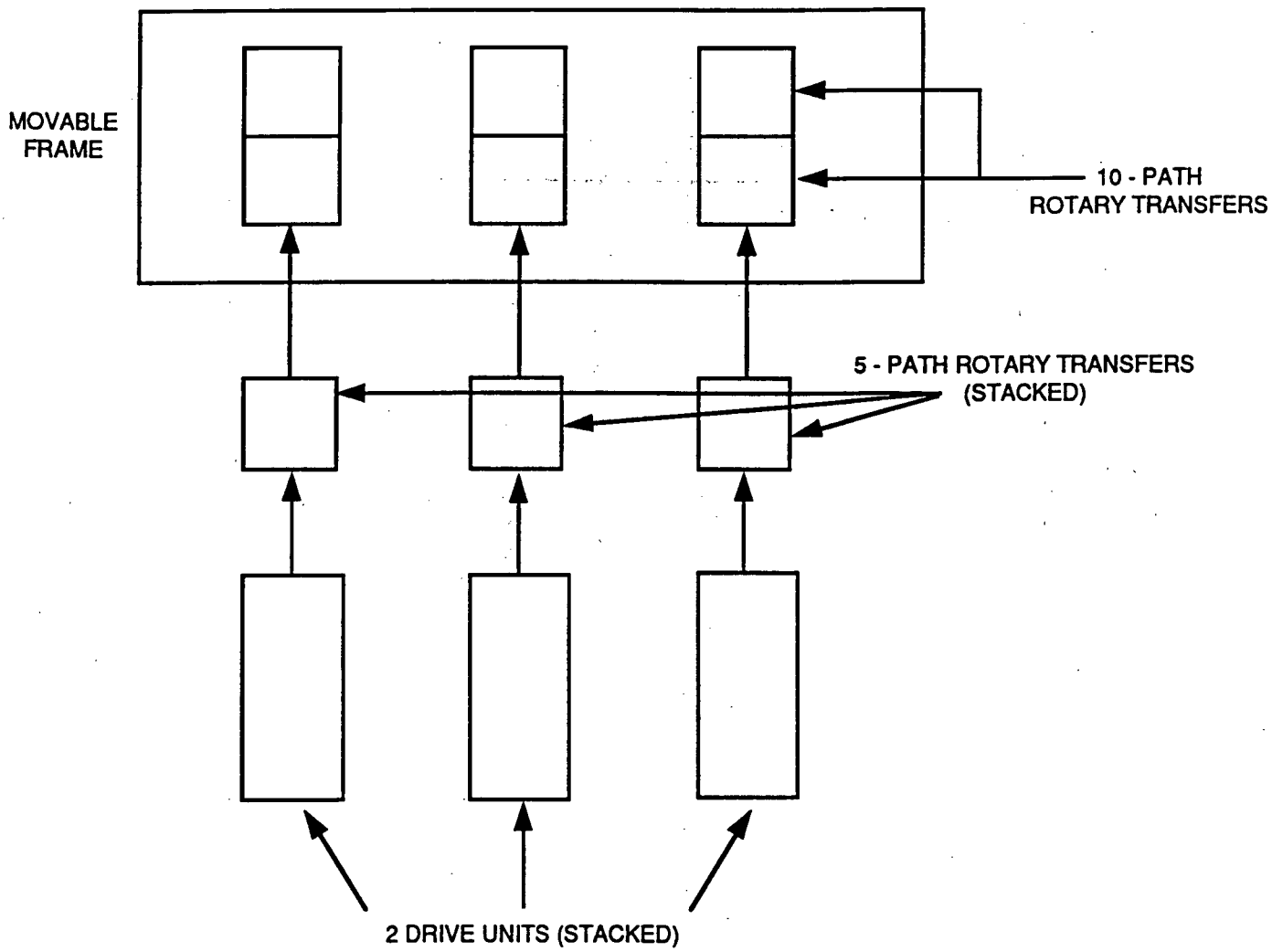

ZION STATION UFSAR

Figure 7.7-6
SCHEMATIC ARRANGEMENT OF
INCORE FLUX DETECTORS
(PLAN VIEW)

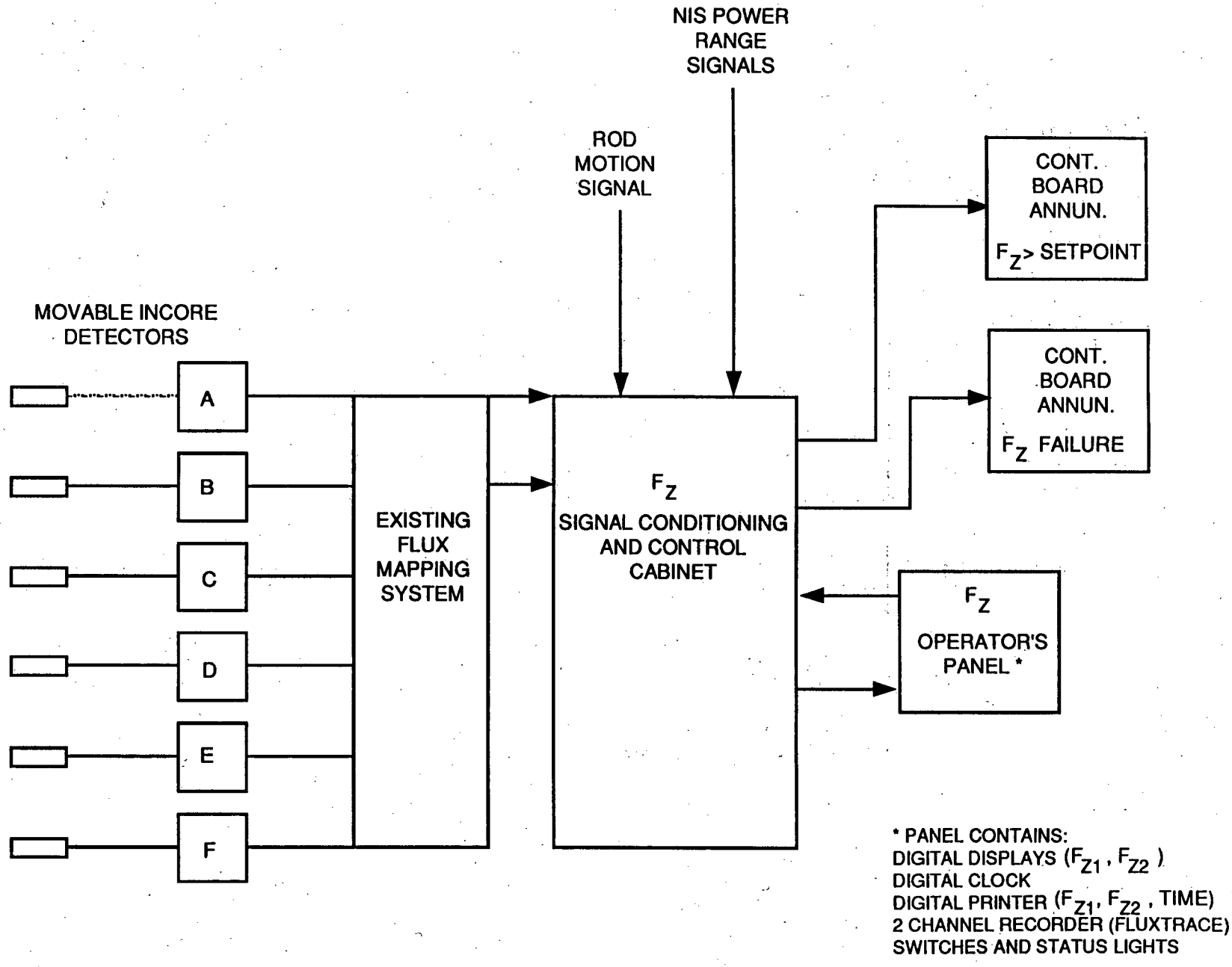

ZION STATION UFSAR

Figure 7.7-7
BLOCK DIAGRAM OF APDMS SYSTEM

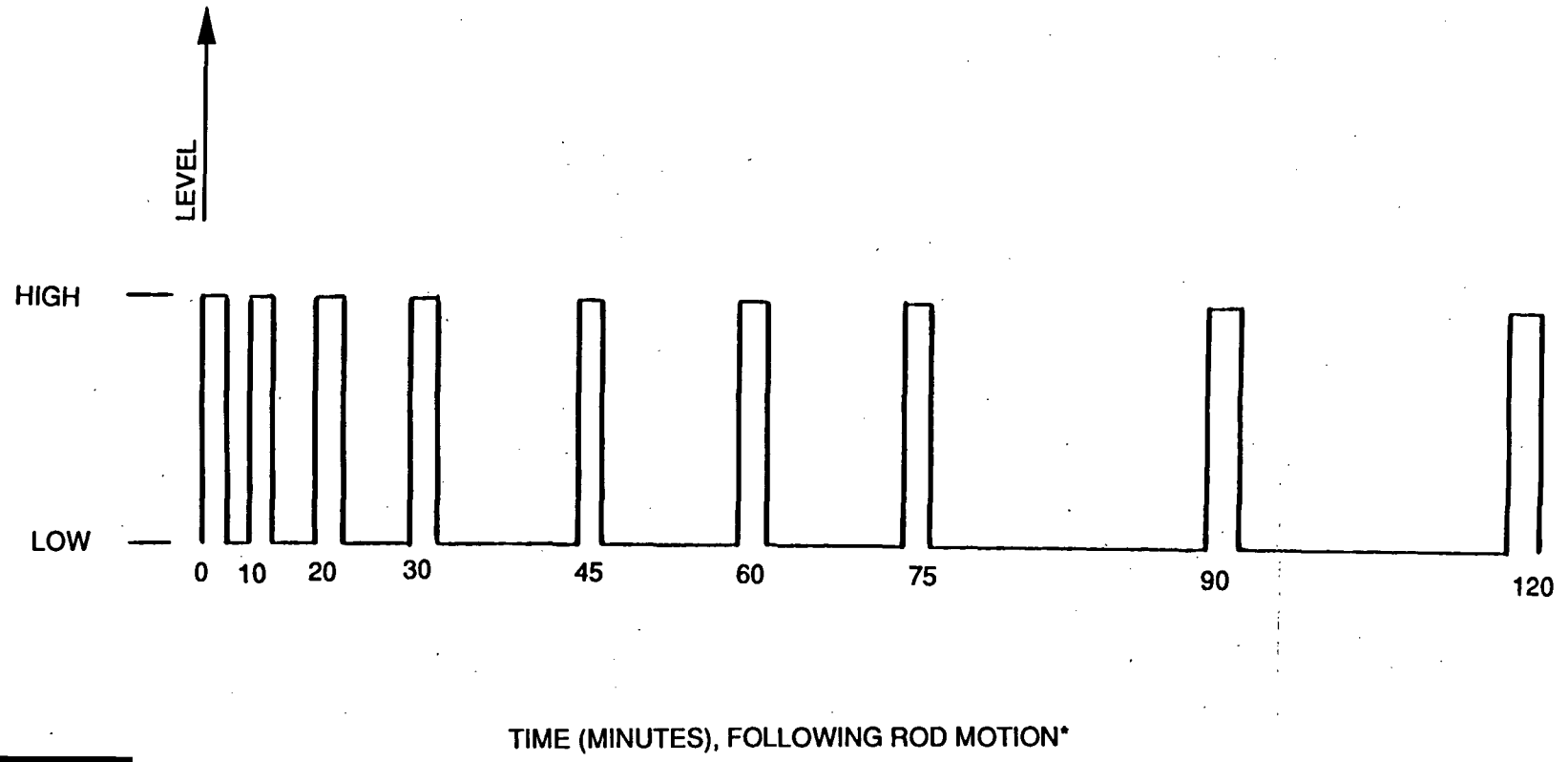

* NOTE:
THESE SETTINGS ARE MANUALLY ADJUSTABLE

ZION STATION UFSAR

Figure 7.7-8
AUTOMATIC SCANNING SEQUENCE

TABLE OF CONTENTS

TABLE OF CONTENTS

LIST OF TABLES

LIST OF FIGURES

8. ELECTRIC POWER

8.1 INTRODUCTION

8.1.1 Electrical System Design Basis

The Electrical Power System to the station is designed to provide a diversity of reliable power sources which are physically and electrically isolated so that any single failure will affect only one source of supply and will not propagate to alternate sources. The station Auxiliary Electrical Power System is designed to provide electrical isolation and physical separation of the redundant power supplies for station requirements which are important to safety. Means are provided for rapid location and isolation of system faults.

In the event of total loss of auxiliary power from offsite sources, auxiliary power required for safe shutdown will be supplied from diesel generators located on the site. The diesel generators are physically and electrically independent. Each power source, diesel generator and offsite, up to the point of connection to the Engineered Safety Features (ESF) System power buses, are physically and electrically independent. Loads important to plant safety are split and diversified between independent ESF System switchgear groups. However, there are no provisions for startup without offsite power. There are sufficient stations on the Commonwealth Edison System that have "black start" capability to supply adequate startup power to the remaining stations.

Batteries are provided as a source of power for vital loads. The ESF Electrical Systems are designed in accordance with the "Proposed IEEE Criteria for Class 1E Electrical Systems for Nuclear Power Generating Stations, dated June 1969."

8.1.2 Offsite Transmission System

Electrical energy generated at the Station will be stepped up to 345 kV by the main power transformers and fed into 345-kV transmission terminal buses with ten circuit breakers and six transmission lines. Two 345-kV overhead lines serve as interconnections with Wisconsin Electric Power Company via their Arcadian and Pleasant Prairie Transmission Substations. Four additional 345-kV overhead lines are connected into Commonwealth Edison's 345-kV system at Libertyville, Prospect Heights, and Northbrook Transmission Substations. At each substation, the incoming 345-kV lines terminate on a 345-kV bus through a circuit breaker. Two 345-kV overhead lines from the Des Plaines bus connect with the Skokie Transmission Substation, which is connected to the Northbrook transmission substation.

8.2 OFFSITE POWER SYSTEM

8.2.1 Description

8.2.1.1 345-kV Network Transmission Terminal

Figure 8.2-1 shows the physical layout of the 345-kV switchyard and transmission facilities. The figure shows six transmission lines, two system auxiliary transformers and two main power transformer banks terminating on the 345-kV bus consisting of 10 circuit breakers. The transmission lines are installed two lines to a tower and two of these lines leave the switchyard on a separate right-of-way. Because of the separation between the six transmission lines, no single failure will negate the ability to provide offsite power.

The control power for the 345-kV switchyard breakers is supplied by two 125-Vdc feeds (one fed from Unit 1 battery and the other from Unit 2 battery). The feeds from each battery establish two separate trip circuits for the two trip coils in each breaker in the switchyard. Since separate control power and protective relaying exist for each breaker, no single failure will negate the ability to provide offsite power.

Each transformer bank consists of two (half size) transformers (1E and 1W for Unit 1 and 2E and 2W for Unit 2). Each transformer is rated 23.7 to 345 kV, grounded wye, 3-phase, 635 MVA.

The main generator leads to the main transformer and the feed to the unit auxiliary transformer (from the generator leads) consists of an isolated phase bus provided with forced air cooling. Removable sections are provided in the main generator leads, which may be used during an emergency situation to provide an alternate source of offsite auxiliary power by back feeding the 4-kV nonESF buses from the unit auxiliary transformer through the main power transformer.

The main generator armature, unit auxiliary transformer and main transformer windings are protected against internal faults and grounds by differential relay schemes arranged in overlapping zones.

8.2.2 Analysis

Commonwealth Edison Company's generation and transmission system is designed to withstand the sudden outage of large amounts of capacity. An example is the system's ability to compensate for the simultaneous loss of more than one of its largest generating units. This is possible in part because Commonwealth Edison has high capacity interconnections with neighboring companies. Several of these are 345-kV ties. In 1971, Commonwealth Edison installed a 765-kV and an additional 345-kV interconnection to the east to supplement the two existing 345-kV lines in that direction. Commonwealth Edison's nonsimultaneous, first contingency

import capability for the summer of 1991 varied from 450 MW to 3800 MW, depending on the direction. In addition, Commonwealth Edison's summer net generating capacity was approximately 22,000 MW. Each Zion unit represents about 4.7% of the system capability. Considering these interconnection supplies and internal generation reserves, the system will be able to withstand a simultaneous loss of generating capacity considerably greater than that of the two largest units on the system.

If one or both of the Zion units are tripped when carrying full load, power to replace this loss will be supplied as indicated above by Commonwealth Edison's interconnected transmission system and its internal reserve. The 345-kV lines at Zion will continue to be energized from the transmission system. Station and system design for stability and circuit isolation will prevent the sudden loss of one unit at Zion from causing the second unit to trip.

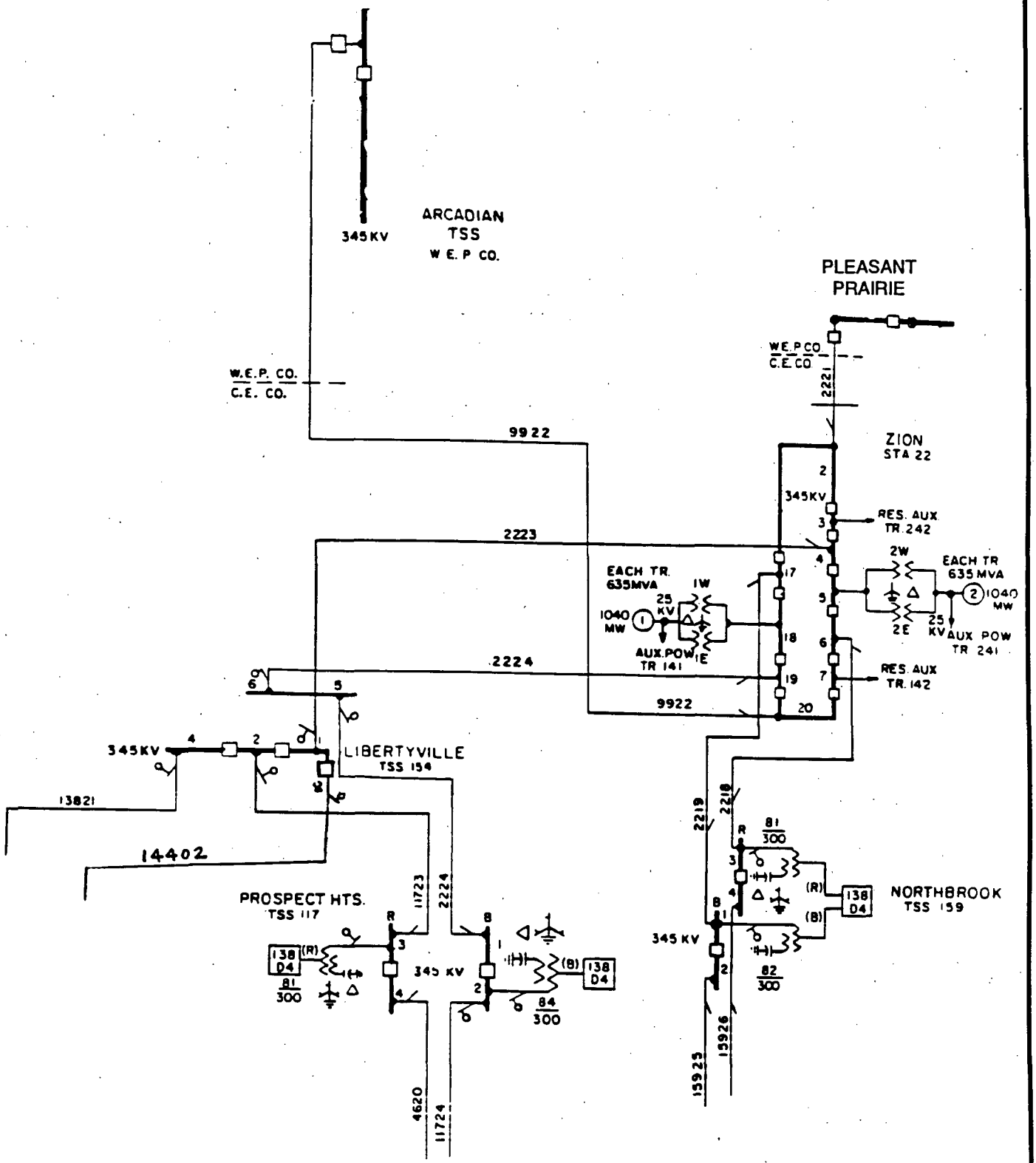

ZION STATION UFSAR

Figure 8.2-1

345-kV INTERCONNECTION WITH TRANSMISSION SYSTEM

8.3 ONSITE POWER SYSTEMS

8.3.1 AC Power Systems

8.3.1.1 Description

The Auxiliary Power System provides a reliable source of power to all plant auxiliaries required during any normal or emergency mode of plant operation.

The design of the system is such that sufficient independence or isolation between the various sources of electrical power is provided to guard against concurrent loss of all auxiliary power. Independence or isolation of supply to the various redundant Engineered Safety Features (ESF) is maintained so a single bus fault will not result in the loss of the plant's engineered safeguards systems.

The Auxiliary Power System is designed to provide a simple arrangement of buses, requiring a minimum of switching to restore power to a bus in the event that the normal supply to it is lost.

The basic arrangement of the plant electrical system is shown on the Single Line Diagram, Figure 8.3-1 for Unit 1 and Figure 8.3-2 for Unit 2.

8.3.1.1.1 Main Auxiliary Power System

Auxiliary power at 4160 V is provided by the unit auxiliary transformer (141 for Unit 1 and 241 for Unit 2) and the system auxiliary transformer (142 for Unit 1 and 242 for Unit 2). The unit and system auxiliary power transformers are rated 50 and 55 MVA (force oil air rating), respectively. Each auxiliary power transformer is capable of providing the total auxiliary power requirements for the unit when the unit is operating at full load.

During startup, shutdown, and hot standby, auxiliary power for each unit will be taken from its system auxiliary transformer. When the main generator of either unit is synchronized to the 345-kV System, the auxiliary power for that unit may be taken from either the unit auxiliary transformer, the system auxiliary transformer, or both auxiliary transformers concurrently, each sharing approximately half of the load.

In the event that both sources of normal auxiliary power are lost for either one or both units, the auxiliaries essential to safe shutdown will be supplied from diesel generator standby power sources. If available, the opposite unit's system auxiliary transformer may also be used as a source of reserve power.

8.3.1.1.1.1 4160-V System

Power from the auxiliary transformers is distributed at four main 4160-V switch-groups (buses 142, 143, 144, and 145 for Unit 1 and buses 242, 243, 244, and 245 for Unit 2).

Each of the four main switch-groups can be powered from either the unit auxiliary transformer or system auxiliary transformer. If the main generator trips, switch-groups powered from the unit auxiliary transformer will be transferred automatically to the system auxiliary transformer so that all four main buses continue to receive power and can supply auxiliaries as required for a safe and orderly shutdown.

Plant auxiliaries which have large power requirements, such as the reactor coolant pumps, circulating water pumps, condensate pumps, etc., will be fed directly from the main 4160-V buses. The auxiliaries are divided among the buses to provide a high degree of diversification. The system auxiliary transformer for each unit supplies a fifth bus (141 for Unit 1 and 241 for Unit 2) that powers a motor-driven feedwater pump and can be cross-connected to supply the opposite unit's ESF buses.

8.3.1.1.1.2 480-V System

The smaller plant auxiliaries are supplied from the 480-V unit substations which in turn derive their power from the main 4160-V buses.

The 480-V unit substation transformers are rated 1500 kVA, 4160 V, delta 480/277 V, wye, 3-phase. The 480-V switchgear is the draw-out type.

Motor control centers are fed from the 480-V unit substation load breakers and are strategically located throughout the Station. There are no motor control centers located within the Reactor Containment Building. The 480-V motor control centers are equipped with thermal magnetic circuit breakers for nonmotor loads and magnetic breakers and starters with thermal overload protection for the motor loads.

The 480-V switchgear and motor control centers are metal-enclosed. They are provided with grounding and have the mechanical safeguards necessary to assure personnel protection and prevent or limit equipment damage during system fault or overload conditions.

8.3.1.1.1.3 120-Vac Instrument and Control Power System

The general instrumentation and control power at 120 Vac is obtained from 480- to 120-Vac, dry-type transformers and associated circuit breaker distribution panels which are an integral part of the 480-V system motor control centers. Motor starter control power is obtained from individual control power transformers associated with each motor control center motor starter.

The 120-Vac instrumentation and control power associated with the Reactor Protection System (RPS) and ESF is obtained from four 7.5-kVA inverters for each unit fed from the 480-Vac Electrical System and the Station 125-Vdc System. See Section 8.3.1.1.4 for a more detailed description.

8.3.1.1.2 Diesel Generator Standby Auxiliary Power System

8.3.1.1.2.1 Design

In the event that both sources of normal offsite and onsite generated auxiliary power are lost for either one or both units, the auxiliaries essential for safe shutdown will be supplied by five (Seismic Class I) diesel-driven generators. Two diesel generators are permanently assigned to two of the three ESF Electrical System 4160-V buses for each unit (diesel generator 1B to bus 149 and 1A to bus 148 for Unit 1 and diesel generator 2B to bus 249 and 2A to bus 248 for Unit 2). The fifth diesel generator (diesel generator 0) is available to either unit's third ESF Electrical System 4160-V bus (either bus 147 for Unit 1 or bus 247 for Unit 2). The diesel generator feed breakers for buses 147 and 247 are electrically interlocked to preclude operating both buses in parallel except as permitted by procedure. Under station blackout conditions, it is desirable to allow the operator to bypass this interlock, under procedural control, to increase the availability of safe shutdown loads. An interlock defeat switch is provided on 1CB70 to permit the Bus 147 feed breaker to be closed if the Bus 247 feed breaker is already closed. Similarly, an interlock defeat switch is provided on 2CB70 to permit the Bus 247 feed breaker to be closed if the Bus 147 feed breaker is already closed. This interlock defeat capability is automatically prohibited if there is a safety injection signal present for either unit.

The connection of the diesel generator standby power to ESF Electrical System buses is indicated in one-line form on Figures 8.3-1 and 8.3-2. The assignment of ESF auxiliary loads and other critical station loads to the 4160-V ESF buses and their associated diesel generators, for both units, is indicated on Table 8.3-1. The sequence of load to the diesel generators is also indicated on Table 8.3-1.

Each diesel generator is designed and installed to provide a reliable source of redundant onsite generated auxiliary power and is capable of supplying ESF loads powered from its associated ESF bus.

Each diesel generator is rated 5000 kVA, 0.8 power factor at 4160 V, 3-phase, and 600 rpm. The diesel engines were manufactured by Cooper-Bessemer and the attached generators were manufactured by Ideal. Each unit has a continuous rating of 4000 kW and a 2-hour (short time) rating of 4400 kW. The generators are provided with static type brushless excitation and field flashing for rapid voltage buildup. The diesel generators are designed to reach rated speed and be ready to accept load within 12 seconds and carry rated load (4000 kW) within 60 seconds after receipt of a starting signal to the diesel engine. In addition, the Diesel Generator System is designed to accept the Emergency Core Cooling System, Containment Cooling System and all other ESF loads in the sequence indicated in Table 8.3-1 and within the allowable elapsed time from the initiation of an Safety Injection (SI) signal as stated in Sections 6.3.3 and 15.6.5.4.

Each diesel generator will be started automatically upon sensing:

1. Containment high pressure,

2. Pressurizer low pressure ,
3. High steam line differential pressure,
4. High steam flow coincident with:
   a. Low steam line pressure, or
   b. Low-low primary coolant loops average temperature,
5. Manual SI,
6. An undervoltage condition on its associated 4160-V ESF bus, or
7. Degraded voltage on its associated 4160-V ESF bus for approximately 5 minutes.

Each diesel generator can be manually started by either the control room switch, located on the main control board, or by a pushbutton located on a separate local control panel provided for each diesel generator.

Following an automatic start (by loss of normal auxiliary power or by an SI signal), the protective devices which are in service during emergency operation of the diesel generator will automatically shut down the diesel generator if any of the following conditions are sensed:

1. Overspeed,
2. Generator differential current,
3. Reverse power (breaker only), or
4. Incomplete sequence. (Engine cranking for an excessive time)

Following a manual (by control switch) start, the protective devices in service during operation of the diesel generator will automatically shut down the diesel engine generator if any of the following conditions are sensed:

1. High engine vibration,
2. Overspeed,
3. Low lube oil pressure - engine bearings,
4. Low lube oil pressure - turbocharger bearings,
5. High jacket water temperature,
6. High engine main bearing temperature,
7. High rate of rise on engine main bearing temperature,
8. Reverse power (breaker only),
9. Generator differential current,
10. Generator phase overcurrent,
11. Turbocharger thrust bearing wear,
12. High connecting rod bearing temperature,
13. High crankcase pressure,
14. Incomplete sequence, (Engine cranking for an excessive time)
15. Electronic Overspeed, or

Following either an automatic start or a manual start, loss of 125 VDC control power to the engine control panel will also shut down the diesel engine.

During emergency operation, when mechanical and electrical tripping functions are bypassed (and provided that none of the bypassed functions are abnormal), the diesel generator should be able to operate indefinitely, provided that:

1. Prior to emergency operation, the diesel generator had been given trial operation and proven to be operating satisfactorily.

2. Additional surveillance of the diesel generator is maintained during emergency operation. Manual action is taken on any deviation from

normal operation, as indicated by the instrumentation located in the Control Room and in each diesel generator room.

The controls for the governor, voltage regulator, synchronizer, and generator breaker for each diesel generator are located on physically separated portions of the main control board. Each diesel engine's Fuel Oil System, Air Starting System, and the Generator Output and Excitation Systems are equipped with instrumentation to monitor all important parameters and to annunciate abnormal conditions. A modified monitoring system measures important diesel parameters. The monitoring system provides no safety trips but provides all non-safety trips of the engine.) Tables 8.3-2 and 8.3-3 list the instrumentation and controls provided on the main control board and locally at the diesel generator.

The Diesel Generator Fuel Oil Storage and Transfer, Diesel Generator Cooling Water, Diesel Generator Starting, and Diesel Generator Lubrication Systems are discussed in Sections 9.5.4, 9.5.5, 9.5.6, and 9.5.7, respectively.

Each diesel generator is housed in a separate room which is enclosed on all four sides by a minimum 1-foot 0-inch reinforced concrete wall (see Figure 1.2-5). The ventilation and combustion air inlet to each concrete wall and the internal louvered openings for combustion air are located at a 90-degree angle to the outside wall. Each room has a separate Carbon Dioxide Fire Protection System from the common station carbon dioxide tank. Each room also has an independent ventilation system which is part of the engineered safeguards and is considered necessary for diesel generator operability. The ventilation system operation is interlocked with the Carbon Dioxide System and will automatically shutdown when the Carbon Dioxide System is initiated. Intake fire dampers in each room are closed when the respective Carbon Dioxide System is initiated but combustion air is still available through direct ducting to the diesel generator for continued operation in an emergency.

The design of the diesel generator rooms virtually eliminates the possibility of missiles, explosions, and fire in one unit from affecting its redundant counterpart. Section 2.2.4 (References 6 and 7) discuss the effect of a fire, resulting from an aircraft crash, on the diesel generators.

Each diesel generator and its associated auxiliaries are designed to meet the station Seismic Class I design criteria.

Cross-Trip circuitry is installed for the diesel generators (DGs) to preclude the DGs from experiencing large load transients when paralleled to the Edison system concurrent with a loss of offsite power (LOOP). This circuitry separates the DG from the nonessential loads during a LOOP and prevents DG exposure to block starting of ESF components.

The Diesel Generator (DG) Cross-Trip affects both nonessential breaker and essential breaker circuitry. The nonessential breaker circuitry was modified by adding a logic circuit in the breaker control circuitry. This causes the nonessential feed breaker to the essential bus to trip if both the reserve (System Auxiliary Transformer) feed breaker and the main (Unit Auxiliary Transformer) feed breaker to the applicable nonessential bus are tripped for greater than 0.15 seconds. The circuit detects a loss of offsite power and isolates the nonessential bus from the essential bus protecting a running DG from being overloaded by eliminating the possibility for the DG to assume the reactor coolant pump (RCP) bus loads.

The essential breaker circuitry was modified by installation of a circuit which trips the DG output breaker if the essential bus main feed breaker is closed and a Safety Injection occurs. This protects the DG from current surges due to ESF motors block starting and any possible common mode damage with the main feed if a fault condition would occur.

8.3.1.1.2.2 Initial Testing

At the time the diesel generators were purchased, Cooper-Bessemer had performed various laboratory tests on the same type of engines, which verified the performance of the engine type. In addition, a similar diesel generator has been in service since 1963.

The special acceptance tests required and performed by the manufacturer consisted of the following:

1. Operate the diesel generator at no load at 110% of rated speed for 5 minutes.

2. Dielectric tests on the generator stator, rotor, and control circuits in accordance with applicable ANSI and IEEE standards.

3. Functional operation tests of the Voltage Regulation System.

4. Test functional operation and timing of Automatic Starting System by starting five times at no load.

5. Operate the diesel generator at rated speed and voltage with a resistance base load equivalent to 3000 HP, then start a 1500 HP motor loaded to its rated torque at full speed. (A 2000 HP motor was used in place of the 1500 HP specified).

6. Operate the unit at 100% rated load for a period of 4 hours.

Qualification testing was performed at the Cooper-Bessemer factory on the diesel generators listed in Table 8.3-8.

The tests were successful, 107 starts without a failure, and statistically valid (with loading at least 50% of the continuous rating within 30 seconds after receipt of an engine start signal). The reports are on file and available for review at the Commonwealth Edison Company.

Various tests were conducted which verified that the diesel generator has the ability to start and accelerate to rated speed within 10 seconds, accept load from 50% to 115% of the continuous rating within 30 seconds after the receipt of an engine start signal. In addition, tests were conducted in which the diesel generator was carrying a resistive load of at least 50% of the continuous rating when a 2000 HP induction motor was started and accelerated to rated speed under load within a 30-second period after the receipt of an engine start signal. The motor used in these tests is 33% larger than the single largest design load (1500 HP) required for a loss-of-coolant accident (LOCA) condition.

Also on file at the Commonwealth Edison Company is a report of a test conducted at the Cooper-Bessemer factory on a prototype engine which shows 103 successful consecutive starts. This test verifies that the engine and its starting auxiliaries have a high degree of reliability.

Construction tests were conducted on each diesel generator to confirm its operability; however, these starts were not considered statistically valid for the determination of starting reliability.

Preoperational testing on the Unit 1 and 2 diesel generators, including starts with load pickup, were conducted at the Zion site prior to Unit 1 and 2 operation.

The test conducted and documented at the Cooper-Bessemer factory, exceeded the Commission's requirement of 100 starts with load applied within 30 seconds after receipt of an engine start signal.

8.3.1.1.3 Engineered Safety Features Auxiliary Power System

Engineered safety features required to safely shut down the reactor and remove reactor decay heat for extended periods of time following a loss of offsite power and/or a LOCA are supplied with power from the ESF Electrical System. That portion of the Station Auxiliary Power System which supplies power to the ESFs is designated as the ESF Electrical System and is comprised of three independent systems or divisions (see Figure 8.3-3).

The assignment of ESF loads to the three electrical systems or divisions for each unit is indicated in Table 8.3-1. The division of the loads between the system buses is such that the total loss of any one of the three electrical systems or divisions on either unit will not prevent the safe shutdown of the reactor under any normal or abnormal condition.

The ESF Electrical System by design provides for electrical independence and physical separation of components between the three divisions (from power source to load) such that no single electrical equipment failure or fault or single failure of any other system within the station will result in the loss of more than one of the three systems or divisions. The simple arrangement of buses provides for a minimum of required switching to restore power to a bus in the event of a failure of its normal power supply.

The power, control, and instrumentation circuit cables associated with the ESF System are provided with physical separation between the three divisions throughout the station (see Figure 8.3-4). Section 8.3.1.4.2 provides more information on cable separation criteria.

8.3.1.1.3.1 4160-V and 480-V Systems

Engineered safety features are fed from three 4160-V buses designated as ESF buses (147-Div 17, 148-Div 18, and 149-Div 19 for Unit 1 and 247-Div 27, 248-Div 28, and 249-Div 29 for Unit 2). Each bus has the following three independent ac power sources:

1. A normal source from either the unit auxiliary transformer or the system auxiliary transformer via buses 142, 143, and 144 for Unit 1 and buses 242, 243, and 244 for Unit 2;

2. A standby source from the onsite diesel generators discussed in Section 8.3.1.1.2; and

3. A reserve source of offsite generated power from the opposite unit's system auxiliary transformer via bus 241 for Unit 1 ESF buses and bus 141 for Unit 2 ESF buses. Tie buses and manually controlled circuit breakers are permanently installed for this connection.

Electrical interlocks consisting of mechanically actuated auxiliary breaker position switches associated with the reserve source and standby source feed circuit breakers are provided in the breaker close circuitry. These interlocks prevent an operator from closing both the reserve source and standby source feed breakers for each bus, which if not prevented, could result in paralleling the standby and reserve power sources.

In addition to the above, a third source of offsite power is available by virtue of the removable section of the main generator leads, allowing back-feeding the unit auxiliary transformer from the 345-kV System through the main power transformer as described in Section 8.2.1.1.

The Auxiliary AC Power System has the capability of back-feeding from either bus 147, 148, or 149 to the normal source buses 142, 143, and 144, respectively, to permit the energization of certain loads from a standby source (diesel generator) under prolonged complete loss of offsite power. Administrative control will permit the back-feeding from only one standby source at a time so that standby power sources will not be operated in parallel.

A second level of undervoltage protection is installed on each 4160-V ESF (Class 1E) bus. This protective relaying consists of relays connected in a two out of two logic (per bus) such that when the 4160-V ESF (Class 1E) bus voltage falls below the Secondary Undervoltage setpoint for longer than 8 (± 2) seconds it will de-energize the second level undervoltage relays and activate a series connected timer (setpoint 5 (± 5%) minutes). At the end of 5 minutes, the offsite power source breaker will be tripped, the diesel generator will be started, load shedding will be initiated, and the Safe Shutdown Loads will be sequenced on the diesel generator when satisfactory

voltage and frequency are achieved. If a SI signal is generated concurrent with a degraded grid voltage condition, or at anytime during the operation of the 5-minute timer, the SI signal will automatically start the diesel generator and bypass the 5-minute timer. The 5-minute time delay is of sufficient duration to prevent spurious operation of the second level loss of voltage relays during short bus voltage dips that may result from starting large motors or short duration grid disturbances. Additionally, the time delay will allow operator action to attempt restoration of grid voltage by means available to him. The 8-second timer is of sufficient duration to prevent spurious operation of the second level loss of voltage relays and separation of the Class 1E System from the preferred offsite power system while starting safety equipment motors during a LOCA. For Unit 1, the Secondary Undervoltage setpoints for 4160-V ESF (Class 1E) buses 147, 148, and 149 are ≥ 3836-V, ≥ 3836-V, and ≥ 3885-V, respectively. For Unit 2, the Secondary Undervoltage setpoint for each 4160V ESF (Class 1E) bus is 3846 (± 2%) volts.

Once the diesel generator is supplying its associated bus, load shedding is blocked by a "b" contact of the diesel generator breaker. If the diesel generator breaker should be tripped, load shedding and sequencing will be reinstated.

The larger auxiliaries such as the service water pumps and safety injection pumps are fed directly from the 4160-V buses, while the smaller auxiliaries are fed from 480-V unit substations and motor control centers associated with each 4160-V ESF bus in a manner identical to the main auxiliary power system.

Motor starter control power is obtained from individual control power transformers associated with each motor control center motor starter.

8.3.1.1.4 Inverter Power Supply for Essential Services

The 120-Vac Nuclear Steam Supply System instrument power supply is divided into four buses for each unit (Unit 1: buses 111, 112, 113, 114; Unit 2: buses 211, 212, 213, 214 - see Figures 8.3-1 and 8.3-2). These four buses provide power for reactor protection and safety features instrumentation and control channels I, II, III, and IV respectively. Four power supplies furnish power for the four instrument buses.

Each bus is normally supplied from a 480-Vac Electrical System bus that is stepped down, rectified, and subsequently passed through an inverter to produce a regulated source of 120 Vac. If the normal 480-Vac power source is lost, then 125-Vdc power is available to the same inverter to supply 120-Vac power to the instrument bus. In the event of a loss of dc power or inverter failure, a backup source of 480-Vac power is available to supply a 480/120-Vac stepdown transformer that can provide 120 Vac to the instrument bus by proper alignment of the instrument bus incoming breakers. The specific inverter power supplies are listed in Table 8.3-4.

8.3.1.1.4a Inverter Power Supply for Balance of Plant (BOP)

Each Unit is provided with a 120Vac BOP uninterruptible power supply (UPS). The main features of the UPS are a three phase inverter and a solid state output transfer switch. The inverter is normally supplied from the 480Vac non-essential auxiliary power system. The 480Vac power is stepped down rectified and inverted to produce regulated 120Vac power. If the normal 480Vac power source is lost a 125Vdc power source supplies the inverter. Upon loss of both inverter power sources or an inverter failure, automatic transfer to a 480/120Vac stepdown regulating transformer occurs via the solid state transfer switch. Loads will then be supplied 120Vac regulated power through this transformer. The major load of each inverter is a unit's process computer.

8.3.1.1.5 Tests and Inspection

Each diesel generator is tested in accordance with the requirements of Regulatory Guide 1.108, Revision 1, August 1977, "Periodic Testing of Diesel Generator Units Used as Onsite Electric Power Systems at Nuclear Power Plants" except as noted in the Technical Specifications. R.G. 1.108 also provides criteria for determining the

number of diesel generator test failures and the number of valid tests. This information is utilized to evaluate diesel generator reliability.

To ensure the operational readiness of each diesel generator, tests and inspections are conducted periodically. Each diesel generator is started and loaded for a period of time long enough to bring all the components of the system into temperature equilibrium conditions. Should one of the components require maintenance, the necessary corrections will be made and the component retested.

The diesel generators are tested to check for equipment failures and deterioration. Each diesel generator is normally tested on a monthly basis; however, weekly testing for a specific diesel generator may be required if that diesel generator does not pass the monthly test requirements. Testing will be conducted up to equilibrium operating conditions to demonstrate proper operation at these conditions. The diesel generator will be manually started, synchronized to the bus and loaded to at least 4000 kW for a minimum of 1 hour. Diesel generator experience at Commonwealth Edison Company generating stations indicates that the testing frequency is adequate and provides a high reliability of operation should the system be required.

Each diesel generator has two air compressors and two air receiver tanks for starting. It is expected that the air compressors will run only infrequently. During the check of the diesel discussed above, the receivers will be drawn down below the point at which the compressor automatically starts to check operation and the ability of the compressors to recharge the receivers. Pressure indicators are provided on each of the receivers.

In addition to the testing discussed above, each diesel generator will undergo a comprehensive functional test during refueling outages. The functional testing will check diesel starting and closure of diesel breaker and sequencing of loads on the diesel. The diesel will be started by a signal simulating a LOCA. In addition, an undervoltage condition will be imposed to simulate a loss of offsite power. The timing sequence will be checked to assure proper loading in the time required. Periodic tests between refueling outages verify the ability of the diesel to run loaded. Periodic testing of the various components plus a functional test at a refueling interval are sufficient to maintain adequate reliability.

Periodic testing of all other ESF electrical equipment will be made. Should one of the components require maintenance, the necessary correction will be made and the component retested.

8.3.1.2 Analysis

8.3.1.2.1 Cable Derating

The allowable current carrying capacities (ampacities) for the various power cables and control cables (where applicable) were computed using Reference 1 as follows:

1. The specific ampacity for each size cable was determined by applying the appropriate derating factor (0.6 for 25-42 conductors) from Table VIII, in accordance with note 3 (page V), to the ampacity of the identical cable in isolated conduit in air (as shown on pages 264 and 313), thus obtaining the ampacity for cables in solid metal trays without maintaining spacing; and

2. For applications inside the Containment, the ampacities were further reduced to account for the higher expected ambient temperature, in accordance with equation 5a (page III).

8.3.1.2.2 Cable Tray Loading

The quantity of cable in any cable tray (power, control, or instrumentation) will not exceed the number determined by the most limiting restriction of the following three restrictions:

1. Conductor Temperature (Heat Generation)

   The conductor temperatures are held within the cable rating by assigning conductor ampacities which include the effect of appropriate derating factors as described in Section 8.3.1.2.1. The maximum number of conductors allowed by this restriction is dictated by the derating factor selected (e.g., a derating factor of 0.6 limits the maximum number of conductors to 42, whereas a derating factor of 0.5 allows an additional amount of conductors).

2. Tray Capacity

   The depth of cable fill shall not exceed the depth of the tray. When the installation is complete, all cables will be below the level of the top of the siderail of the tray. If during the design or construction period, it is determined that the tray originally selected will not accommodate the necessary cables, then additional trays, or trays with a larger cross-sectional area will be installed.

3. Structural (Load Bearing) Capacity of Trays and Supports

   The trays were designed to carry a distributed load of 40 pounds per square foot, plus a 200-pound man (concentrated load) located in the

middle of an 8-foot span, with total deflections not to exceed $^1/_2$ inches. Tests were performed and documented by the tray vendor to confirm the adequacy of the cable tray design.

The total loading, when the installation is complete, will not exceed the allowable stress for the materials used under either the static or seismic loading conditions.

Of the above three restrictions, the limiting restriction depends on the conditions of the particular tray. For example, the loading of a power tray containing only small (e.g., 1-inch-diameter) cables would normally be limited by the conductor temperature restraint; whereas the loading of a power tray containing only large (e.g., 3-inch-diameter) cables would normally be limited by the tray capacity restraint. The structural capacity restraint is seldom limiting in the final design because this restraint can usually be relieved by installing additional supports.

The loading of control and instrument cable trays is almost always limited by the tray capacity restraint because these conductors are normally used in circuits where the currents to be carried are far below the actual ampacity rating of the conductors.

In order to demonstrate that cable tray loading conditions for the worst case are conservative and that cables will not be compacted over the service life of the plant, the following calculations were performed:

Type of Cable Trays: Straight Ladder, T. J. Cope Co. Type 261201-XX-09 as shown on Cope Cat Pages L3 & L5.

Ladder cross bar spacing - 9 inches c - c.
Ladder cross bar section - $^7/_8$ inches x $^3/_{16}$ inches
nominal loading depth in the trays - 3.25 inches

1. A possible, but improbable, case of loading would be a 1/c #14 AWG cable (which has an 0.29-inch OD) on the bottom with three layers of 9/c, #10 cable, (OD = 1.05, weight 0.685 lbs/ft) stacked on top.

   Total weight of 9/c #10 Cable on 9-inch span = 3 x 3/4 x 0.685 lbs

   Area on which this load is applied = D*/2 x Crossbar width

   = 0.29/2 x 7/8

Bearing Pressure $= \frac{\text{Loads (lbs)}}{\text{Area (in}^2\text{)}}$

$= \frac{3 \times 3/4 \times 0.685}{0.29/2 \times 7.8} = 12$ psi

Maximum Allowable Bearing Pressure*(psi) = 400 psi

2. A worse (but even less probable) case will be where the above 1/c #14 AWG cable is the bottom-most cable in a tray whose depth has been increased to 8 inches by addition of 4-inch "side boards". This would roughly double the applied load, thereby, increasing the bearing pressure on the 1/c #14 AWG cable to approximately 24 psi (in contrast to the allowable 400 psi).

3. To further illustrate the conservative loading, assume that the load (in 2 above) is applied to an area of D/8 x cross bar width (instead of the more practical D/2 x cross bar width, as suggested by the manufacturer). Even with this hypothetical loading, the bearing pressure on the bottom most cable will be only 96 psi.

These calculations verify that the loading is extremely conservative and for the worst possible case, the stress (96 psi) produced in the cable is far less than the allowable stress (400 psi) which the major cable supplier (Kerite Company) has suggested for the entire 40-year life of the plant (see Reference 2).

8.3.1.2.3 Seismic Design

The seismic design criteria for the cable tray support system require all Class I cable trays to be restrained laterally and longitudinally against seismic movements relative to the building. Lateral restraint was provided by cross bracing the tray hangers, or by bracing the trays to walls with horizontal struts. Cable trays restrained laterally with cross bracing were designed to withstand the peak acceleration on the applicable floor spectra. Trays restrained with horizontal struts were considered rigidly connected to the building structure, and the lateral restraints were designed to resist the maximum floor slab accelerations.

Longitudinal restraint of the cable trays was provided by: oversizing the lateral restraints on tray runs continuous with and perpendicular to longitudinal runs requiring restraint; connecting trays directly to walls; extending brackets from walls parallel to cable tray runs; or by adding cross bracing parallel to the trays.

---

* As recommended in Reference 2.

The cable tray were fastened to the support system with clips. The structural adequacy of these clips was verified by calculating the clamping capacity of the clips. The clamping force plus the dead weight of the trays and cables are utilized to engage friction between tray and the support to resist both longitudinal and transverse seismic loading.

8.3.1.3 Physical Identification of Safety-Related Equipment

8.3.1.3.1 Cable and Cable Tray Markings

The cables and trays throughout the plant are marked for identification as follows:

1. All power, control, and instrument cables are identified at each terminating point, and in many intervening manholes, cable rooms, etc.

2. Plastic tags, in colors as noted below, are used for identification on cables at their termination in switchboards, switchgear, motor control centers, motor conduit boxes, control cabinets, equipment cubicles, etc.

3. The cable tag color code assignments are listed below. The P, C, or K suffix indicates the cable service, i.e., (P) power, (C) control, (K) instrumentation.

   a. Red cable tags shall be installed on all cables with Segregation Codes 17P, 17C, or 17K.
   b. Yellow cable tags shall be installed on all cables with Segregation Codes 18P, 18C, or 18K.
   c. Blue cable tags shall be installed on all cables with Segregation Codes 19P, 19C, or 19K.
   d. Black cable tags shall be installed on all cables with Segregation Codes P, C, K, 7P, 7C, 7K (Cable Division 17Y), 8P, 8C, 8K (Cable Division 18Y), 9P, 9C, 9K, (Cable Division 19Y), 10P, 10C, 10K (Reactor Protection System, Channel 4).

4. The cable tray routing numbers are installed at locations shown on the routing drawings and on cable risers approximately 6 feet - 0 inches above each access floor. The numbers will be placed so they are readily visible to construction workers and plant personnel. The characters will be 2-inches high and color coded as follows for the ESF System and the Balance of Plant (BOP) System.

Red - ESF Div 17	Yellow - ESF Div 18
Blue - ESF Div 19	Black - BOP

   In addition, a 2-inch by 4-inch long bar (solid for power trays and striped for control and instrument trays) in the above specified color

will be installed immediately following the routing code. Brady Perma-Code B-350 tamper proof film tape will be used.

8.3.1.4 Independence of Redundant Systems

8.3.1.4.1 Physical Separation of Electrical Circuits

The power, control, and instrumentation cables, for redundant circuits, associated with the ESF System, are physically separated to assure that no single credible event will prevent operation of the redundant function. Credible events include, but are not limited to, the effects of short circuits, pipe ruptures, missiles, etc. Physical separation of cables is maintained by the cable tray system which is divided into three separate divisions throughout the station. Each division is further divided, see Figure 8.3-4, into three cable trays, one for power cables, one for control cables and the third for instrumentation cables. Power cables 480 V and above are not installed in control or instrument cable trays.

The instrumentation and control equipment, including the cables and their raceways (trays, conduit, etc.) for a given redundant ESF auxiliary (including Class IE Electrical System auxiliaries) is assigned to the same electrical division as the power source. For example, the control cables associated with the containment spray pump motor circuit breaker supplied from bus 148, a Division 18 power source, are also assigned to Division 18. The criteria and design bases for assuring the independence of the electrical instrumentation and control for redundant ESF Systems (including Class IE Electrical System auxiliaries) are thus identical to those described for the ESF Auxiliary Power Systems.

8.3.1.4.2 Cable Separation Criteria

The Commonwealth Edison Company Quality Assurance Manual includes a discussion of the administrative responsibility and control, as well as the procedures which are to be followed, to assure compliance with these criteria during the design of the systems. Only approved exceptions from the following stated design criteria will be allowed.

8.3.1.4.2.1 Cable Routing

The criteria and bases for separation and routing of cables in the Containment, penetration areas, Cable Spreading Room, Control Room, and other congested areas are identical to those applied to the same cable services in other areas of the plant. The criteria are described below:

1. Power cables, control cables, and instrumentation cables will be run in separate trays or conduit.

2. Cables for redundant ESF circuits will be in separate steel trays, with spacing 3 feet horizontally and 4 feet vertically, representing

the design objective. Wherever practical, greater separation will be provided. These separation distances may be reduced if either of the following two circumstances apply:

a. A 3-foot separation (for example) does not provide a gain in reliability over a 6-inch separation (for example), or

b. An appropriate fire barrier (transite or metal for example) is provided between cable trays that are in reduced proximity.

The cable tray systems beneath the Control Room complex and the reactor containment electrical penetration areas are examples of those areas of the Station in which reduced separation has been incorporated into the cable tray design. In the examples cited, the justification of the reduced separation is based upon the absence of potential missile damage within the stated areas.

Fire barriers (transite or metal for example) will be provided for the ESF cable trays wherever a permanent potential fire fuel source exists external to the Cable Tray System. Redundant ESF cables in trays or conduit will be protected or they will not be routed through areas of the station which would subject them to a common fire hazard.

Solid covers (or barriers) will be provided for:

a. Power cable trays wherever the power tray is below a control cable tray or below an instrument cable tray,

b. Power cable trays wherever the separation between redundant ESF trays is less than the design objective stated above,

c. Control cable trays wherever the horizontal separation between redundant ESF trays is less than 18 inches, or

d. Instrument cable trays (except in areas where covers must be omitted to allow cables to enter the tray from above).

3. There will be no power cables in the Control Room area.

4. Cable trays in the proximity of potential missiles will be routed so that trays with cables for redundant ESF circuits will be separated to an extent such that both trays cannot be damaged by any one missile.

5. A "Cable Segregation Code" is used to obtain a check of all cables routed in cable trays for compliance with the required segregation. This "Cable Segregation Code" appears in the cable tabulation and on applicable physical installation drawings.

The above described criteria have been followed, to the maximum extent practicable, in the design of the cable tray and cable systems. Each exception to cable routing criteria will be documented and the documents will be available at the Station.

8.3.1.4.2.2 Sharing of Cable Trays

Each cable in the plant is assigned, according to its function, to one of the four major cable divisions - 17, 18, 19, or BOP.

Cables for the functions listed below will be identified with red cable tags and may share the division 17 cable trays, but will not be run with cables assigned to divisions 18, 19, or BOP:

1. Engineered Safety Feature Division 17,
2. Reactor Protection System Channel 1,
3. Reactor Control Rod Trip Train Matrix 1,
4. Reactor 120-Vac Instrumentation Power (bus 111),
5. Nuclear Instrument System (Excore) SRM/IRM/PRM Channel 1,
6. Nuclear Instrument System (Incore) SIG/POS IND/CONTROL/PWR - Detector A, and
7. Nuclear Instrument System (Incore) SIG/POS IND/CONTROL/PWR - Detector B.

Cables for the functions listed below will be identified with yellow cable tags and may share the division 18 cable trays, but will not be run with cables assigned to division 17, 19, or BOP:

1. Engineered Safety Feature Division 18,
2. Reactor Protection System Channel 2,
3. Reactor Control Rod Trip Train Matrix 2,
4. Reactor 120-Vac Instrumentation Power (bus 112),
5. Nuclear Instrument System (Excore) SRM/IRM/PRM Channel 2,
6. Nuclear Instrument System (Incore) SIG/POS IND/CONTROL/PWR - Detector C, and
7. Nuclear Instrument System (Incore) SIG/POS IND/CONTROL/PWR - Detector D.

Cables for functions listed below will be identified with blue cable tags and may share the division 19 cable trays, but will not be run with cables assigned to division 17, 18, or BOP:

1. Engineered Safety Feature Division 19,
2. Reactor Protection System Channel 3,
3. Reactor 120-Vac Instrumentation Power (bus 113),
4. Nuclear Instrument System (Excore) SRM/IRM/PRM Channel 3,

5. Nuclear Instrument System (Incore) SIG/POS IND/CONTROL/PWR - Detector E, and
6. Nuclear Instrument System (Incore) SIG/POS IND/CONTROL/PWR - Detector F.

Cables for functions listed below will be identified with black cable tags and may share the division BOP cable trays, but will not be run with cables assigned to division 17, 18, or 19:

1. Computer,
2. Radiation Monitoring System Area and Process Detectors,
3. Reactor Control Rod Drive System,
4. Reactor 120-Vac Instrumentation Power (bus 114)*,
5. Balance of Plant Power and Control,
6. Balance of Plant 120-Vac Instrumentation Power,
7. Nuclear Instrument System (Excore) PRM/MISC INSTR Channel 4*, and
8. Reactor Protection System Channel 4*.

Although some of the above BOP cables may be run (as documented approved exceptions) with cables assigned to division 17, 18, or 19 only, cables associated with the functions marked with an "*" will not be allowed (or approved) with cables assigned to divisions 17, 18, or 19.

Cables associated with important (nonnuclear safety-related) BOP auxiliaries, e.g., turbine bearing oil pumps, turning gear, etc., and which are fed from the ESF power buses, are not assigned to division 17, 18, or 19, but instead are identified as division 17Y, 18Y, or 19Y and will be run in either the specified division cable trays, BOP cable trays, or conduit to obtain separation between redundant circuits.

If a BOP cable is routed through an ESF division (17, 18, or 19) cable tray or conduit, it will not be subsequently routed through either of the remaining two ESF division trays or conduits.

8.3.1.4.2.3 Spacing of Wiring and Components in Control Boards, Panels, and Racks

Control board switches and associated lights are furnished in modules. Modules provide a degree of physical protection for the switches' associated lights and wiring.

The control board layout is based on making it easy for the operator to relate the control board devices to the physical plant and to determine, at a glance, the status of related equipment. This is referred to as providing a functional layout. Within the boundaries of a functional layout, modules are arranged in columns of control functions associated with separation trains defined for the Reactor Protection and Engineered Safeguards Systems. Teflon wire is used within the module and between the module and the first termination point.

Modular train column wiring is formed into wire bundles and carried to metal wire ways (gutters). Gutters are run into vertical metal wire ways (risers). The risers are the interface between field wiring and control board wiring. Risers are arranged to maintain the separated routing of the field wire trays.

The interface between the control board wiring and field wiring is made on terminal strips within the control board. Teflon covered cables with connectors are provided for control board to terminal strip interconnection. These cables are supported to ensure separation of the cables consistent with the separation afforded by the front panel layout.

Redundant components which are located on racks are on separate racks and physically separated by a minimum distance of 24 inches. Those redundant components not located on racks are separated by a minimum distance of 18 inches.

8.3.2 DC Power Systems

8.3.2.1 125-Vdc Power System

Each unit is provided with two physically separate and electrically isolated sources of 125-Vdc power (each with its own battery, battery charger and distribution bus), plus a fifth physically separate and electrically isolated source of 125-Vdc power. Figures 8.3-1 and 8.3-2 show (in one-line form) that this fifth 125-Vdc source (Battery 011) supplies dc power to two 125-Vdc distribution buses (011-1 for division 17 Unit 1 loads and 011-2 for division 27 Unit 2 loads).

The five batteries are each housed in separately ventilated rooms within the Auxiliary Building and are provided with reinforced battery racks. Separate ventilating (exhaust) ducts are provided for each Battery Room (111, 112, 211, and 212). Each duct rises more than 10 feet vertically (and independently) above the battery room ceiling (a path distance of at least 20 feet between the Battery Rooms) where they join a common duct to the suction plenum for two full-capacity and mutually redundant exhaust fans. Thus adequate ventilation is provided for each Battery Room at all times. The ventilation of Battery Room 011 is accomplished via independent ducts and exhaust fans.

The battery charger associated with each battery is rated to supply the normal plant dc loads while fully recharging the battery within a 24-hour period.

The following monitoring features are provided to continuously ensure that the capability of a battery to supply power is not degraded:

1. DC voltmeter with selector switch to measure dc output voltage of charger or bus voltage,

2. DC ammeter measures dc output current of charger to battery,
3. Power failure alarm relay on loss of ac power to charger,
4. Charger dc output failure alarm relay,
5. Charger low dc voltage alarm relay,
6. Charger high dc voltage shutdown relay,
7. A recording ground-detector voltmeter and an alarm, and
8. Breaker trip alarms provided on the battery, charger, and bus breakers.

The following steps are taken to ensure disclosure of battery degradation:

1. Weekly measurement of the pilot cell specific gravity, electrolyte level, temperature, pilot cell voltage, and overall battery voltage;

2. Monthly measurement of each cell's electrolyte level and visual inspections of batteries, racks, and ventilation systems;

3. Quarterly measurement (every 3 months) of individual cell voltage, specific gravity, and the temperature of every fifth cell; and

4. Battery service test or a performance discharge test every refueling outage. These tests are performed to ensure that the battery has maintained its required capacity. The battery load profile that the batteries were sized to meet is shown in Table 8.3-5. In addition, the latest revision of the dc Electrical Load Monitoring System (ELMS) load profile should be used for service test requirements. The dc ELMS load profile is obtained from the ELMS Site Coordinator. The performance discharge test is performed to determine overall battery capacity. Specific gravity and voltage of each cell will be determined after the discharge. Verification that each battery is restored to the fully charged condition after this test is also required.

5. Battery capacity will be verified during shutdown to be within acceptable limits when subjected to a performance discharge test at least once every 60 months.

The following protection is provided against overcharging:

1. High voltage shutdown relay which opens the main supply breaker to the charger when the dc output voltage of the charger rises to about 15% over the battery float voltage;

2. DC indicating voltmeter provides visual check on battery voltage.

The five 125-Vdc batteries 111 (211), 112 (212), and 011 are sized to carry the loads for the indicated time periods (as shown in Table 8.3-5 and Table 8.3-6). During an actual failure of normal power, the diesel generator

power supplies will establish battery charger input within approximately 12 seconds. An ac powered annunciator system will alert operators of an undervoltage condition on the 011-1, 011-2, 111 (211), or 112 (212) dc centers.

The DC System is seismically qualified for the Design Basis Earthquake (DBE). The qualification reports for the battery cells, racks, chargers, and the dc distribution panels and cabinets are contained in References 3 through 9, respectively. Table 8.3-7 provides a summary of seismic considerations applied to the Engineered Safety Auxiliary Power System.

Buses 111 and 112 (for Unit 1) are redundant. Buses 211 and 212 (for Unit 2) are redundant. The system design allows for the single failure or loss of either redundant dc bus on each unit during the design basis accident (DBA) and loss of offsite power conditions without adversely affecting the safe shutdown of the plant.

The DC System at Zion is designed to allow the cross-tying of dc buses between units. The tie between buses 111 and 211, buses 112 and 212 (dc buses for Unit 1 and Unit 2), and buses 111 to 011-2, battery 011, 011-1 to 211, are each provided with two normally open, manually operated air circuit breakers mechanically interlocked with a key lock. Additional protection is provided by installing fast acting fuses on the cross-tie cables connecting dc buses 011-211, 111-211, and 112-212. The ties are provided so that the nonredundant dc buses of Unit 1 and Unit 2 can be interconnected during maintenance on or equalizing charging of the battery associated with either bus 111 or 211 and 112 and 212. Charging and maintenance of battery 011 is accomplished by interconnecting bus 011-1 with bus 211 and by interconnecting bus 011-2 with bus 111. No interlocks are provided since the interconnected buses are not redundant and each unit is designed to withstand the loss of one of the three redundant dc buses provided (111, 112, and 011-1 for Unit 1 and 211, 212 and 011-2 for Unit 2).

During normal operation, the batteries are kept fully charged by the battery chargers. Occasionally, the voltage is raised for equalization of the charge on the individual battery cells.

The control power for the ESF Electrical System equipment is supplied only from the corresponding 125-Vdc source as tabulated below. A second (reserve) dc feeder (but from the same dc source) is provided to each ESF control bus so that, in the event of a dc feed cable failure, the control power can be manually transferred to the reserve feeder (See Figures 8.3-1 and 8.3-2).

The five batteries and associated distribution panels supply the 125-Vdc control power to the ESF, switchgear, and diesel generators as shown in Table 8.3-9.

The system design satisfies the single failure criteria in that any one of the three ESF Electrical System buses, including its control power, can be lost and still have sufficient ESF System auxiliaries in operation to safely control the plant under all modes of operation.

8.3.2.1A 125Vdc Power System for Balance of Plant (BOP)

Additionally, each unit is provided with a BOP 125Vdc battery system. The system consists of a battery, battery charger and distribution center. Figure 8.3-1 and 8.3-2 depict the systems in a single line form. The batteries are housed in a ventilated room located on the grade level of the Turbine Building. The major equipment associated with each battery is housed in rooms adjacent to the battery room.

The following monitoring features are provided as a means of assessing each battery capability:

1) DC voltmeter with selector switch to measure dc output voltage of charger, bus voltage or battery,
2) Charger DC ammeter measuring output current,
3) Power failure alarm relay on loss of ac power to charger,
4) Charger low dc voltage alarm relay,
5) Charger high dc voltage shutdown relay,
6) A recording ground detector voltmeter and alarm,
7) Breaker trip alarms provided on the battery, charger and breakers,
8) Bus DC ammeter measuring charging current and/or battery output current,
9) DC bus low voltage alarm relay.

During normal operation each battery is kept fully charged by a battery charger. Occasionally, the voltage of each charger is raised for equalization of individual battery cells. The major load associated with each battery is the unit's process computer.

8.3.2.2 Analysis

Reference Section 8.3.1.2, Section 8.3.1.3, and Section 8.3.1.4.

8.3.3 Fire Protection for Cable Systems

The Zion Station Fire Protection Report provides fire protection information and the effect of postulated fires on plant cable systems.

8.3.4 References, Section 8.3

1. AIEE/IPCEA Power Cable Ampacities, Volume I - Copper Conductors, (AIEE Publication No. S-135-1, IPCEA Publication No. P-46-426) - 1962.

2. Kerite Co. letters dated 1-6-72 and 2-29-72.

3. Gould Co. Calculation SO 7-0432124-EQ dated 1-8-71.

4. Power Conversion Inc. letter dated 5-25-71 and Gaynes Testing Lab report on Job #7115, dated 3-11-71.

5. General Electric Co. letter dated 2-26-71.

6. General Electric Co. Report #70ICS101, dated 2-18-71.

7. Gould Co. Calculation SO 7-043123-EQS, dated 1-8-71.

8. Gould Co. letter dated June 14, 1971 summarizing results of test performed by TII Testing Lab, Inc., College Point, NY.

9. Gaynes Testing Lab Report #71448A dated November 9, 1971.

10. (Deleted)

11. (Deleted)

TABLE 8.3-1

LOADING ON 4160-V ESF BUSES
ZION STATION UNITS 1 AND 2
COMMONWEALTH EDISON COMPANY

				NUMBER INSTALLED					UNIT 1			UNIT 2	
		LOCA	SSD	UNIT 1	SHARED	UNIT 2	HP EACH	BUS 149	BUS 148	BUS 147	BUS 247	BUS 248	BUS 249
1.	Charging Pump (Centrifugal)	**	***	2	0	2	600 + 15%	600		600	600		600
2.	Safety Injection Pump	**		2	0	2	400 + 15%		400	400	400	400	
3.	Residual Heat Removal Pumps	**	***	2	0	2	400 + 15%	400	400			400	400
4.	Component Cooling Pump	**	**	3	5	2	300 + 15%	300	300	300		300	300
5.	Containment Spray Pump	**		2	0	2	600		600	600	600	600	
6.	Auxiliary Feedwater Pump	**	**	2	0	2	600	600	600			600	600
7.	Service Water Pump	**	**	3	0	3	1500	1500	1500	1500	1500	1500	1500
8.	480-V Auxiliary Transformer	*	*	3	0	3		1721	2505	1730	1471	2194	1853
	Total Immediate HP on Each Bus							4556	5676	4545	4015	5365	4688
	Total Motor Output kW = (.746)(HP)							3399	4234	3390	2995	4002	3497
	Total Motor Input kW @ 90% Eff							3777	4704	3767	3328	4447	3886
	Diesel Generator Rating (kW) Req'd							4000	4000	4000		4000	4000
	Diesel Generator Rating kVA @ 80% PF							5000	5000	5000		5000	5000

LEGEND:

- * - Selected loads are energized immediately upon restoration
- ** - Loads are applied automatically in sequence listed above
- *** - Loads are applied by operator as required within diesel generator rating
- ESF - Engineered Safety Features
- LOCA - Loss-of-Coolant Accident
- SSD - Safe Shut Down

TABLE 8.3-2

DIESEL GENERATORS
ALARMS, CONTROLS, INSTRUMENTATION AND STATUS INDICATORS
MAIN CONTROL ROOM

Alarms

Diesel Generator Main Breaker Trip
Generator Differential Current Relay-Operation
Diesel Oil Storage Tank Level-Low
DC Undervoltage - Buses 011, 111, and 112
Diesel Generator Overload or Ground
Diesel Generator Emergency Trip or Fail to Start
Diesel Generator Trouble or Non-Emergency Trip
Diesel Generator Monitoring System Alarm
Diesel Generator Emergency Start Blocked
Diesel Generator Non-Emergency Trips Disabled
Diesel Generator Running Unloaded

Controls

Diesel Generator "START-STOP" Control Switch
Engine Governor Control Switch
Generator Voltage Adjuster Control Switch

Instrumentation

Generator Voltmeter (with phase selector switch)
Generator Wattmeter
Generator Varmeter
Generator Ammeter
Generator Frequency Meter
Generator Synchroscope (with incoming and running voltmeters)
Generator Synchronizing Lights
4-kV ESF Voltmeter

Indicators

Remote Control Available (Green)
Engine - Failure to Start (Amber)
Engine Being Cranked (Red)
Engine Running (Red)
Engine Stopped (Green)

TABLE 8.3-3 (1 of 3)

DIESEL GENERATORS
ALARMS, CONTROLS, INSTRUMENTATION AND STATUS INDICATORS LOCAL

Alarms

Non-Emergency Trips Disabled (Manual)
Loss of DC
Diesel Fail to Start (cranking limit exceeded)
Air Start System Train "A" Trouble
Air Start System Train "B" Trouble
Engine Inlet Lube Oil Pressure Low
Engine Inlet Lube Oil Pressure Low-Low (Trip)
Engine Outlet Lube Oil Temperature High/Low
Engine Outlet Jacket Water Temperature High
Engine Outlet Jacket Water Temperature High-High (Trip)
Overspeed Trip
Crankcase Pressure High (Trip)
Turbocharger Thrust Bearing Wear High (Trip)
Turbocharger Lube Oil Pressure High/Low (Trip)
Connecting Rod Bearing Temperature High (Trip)
Engine Vibration High (Trip)
Main Bearing Temperature High/High Rate (Trip)
Emergency Trip
Turning Gear Engaged
Engine Running Unloaded
Running Without Safety Shutdown Protection
Emergency Start Blocked
Fuel Oil Day Tank Level Low
Engine Driven Fuel Oil Pump Discharge Pressure Low
Jacket Water Standpipe Level High/Low
Engine Lube Oil Strainer Differential Pressure High
Monitoring System Alarm
Non-Emergency Trips Disabled (Manual)
Cooldown in Progress

TABLE 8.3-3 (2 of 3)

DIESEL GENERATORS
ALARMS, CONTROLS, INSTRUMENTATION AND STATUS INDICATORS LOCAL

Controls

Diesel Generator "START" and "STOP" Pushbuttons
Diesel Generator "REMOTE-LOCAL" Control Switch
Governor Control Switch
Pre-lube Oil Pump Control Switch
Incomplete Sequence Reset Pushbutton
Emergency to Normal Run Reset Pushbutton
Jacket Water Pump Control Switch
Starting Air Compressor Control Switches
Starting Air Compressor Reset Pushbuttons
Starting Air Compressor Cycle Reset Pushbuttons
Normal Trips Enabled/Disabled Switch
Maintenance Lockout Switch
DC Control Switch
Fuel Oil Transfer Pump Control Switches
"North" and "South" door "EMERGENCY STOP" and "RESET" Pushbuttons
Diesel Generator "EMERGENCY STOP/RESET" Pushbutton
Voltage Regulator "ON-OFF" Switch
Transfer Switch "MCB-LOCAL"
Diesel Generator "UNIT-PARALLEL" Switch

Instrumentation

Generator Watt Meter
Generator Frequency Meter
Generator Ammeter (with phase selector switch)
Engine Hour Meter
Generator Watt-hour Meter
Engine Lube Oil Pressure Gauge
Engine Fuel Oil Pressure Gauge
Engine Fuel Oil Filter Differential Pressure Gauge
Engine Lube Oil Filter Differential Pressure Gauge
Generator Volt Meter (with phase selector switch)
Generator Var Meter

TABLE 8.3-3 (3 of 3)

DIESEL GENERATORS
ALARMS, CONTROLS, INSTRUMENTATION AND STATUS INDICATORS LOCAL

Indicators

Main DC Control Power Supply On (White)
"REMOTE-LOCAL" Control Transfer Switch On "LOCAL" (White)
"REMOTE-LOCAL" Control Transfer Switch On "REMOTE" (Amber)
Engine Ready for Local or Remote Start (Blue)(Available)
Engine Being Cranked (Amber)
Engine Running (Red)
Engine Stopped (Green)
Generator Excitor Field Circuit Breaker Closed (Red)
Generator Output Breaker Closed Indicating Light (Red)
Starting Air Security Valve Closed Indicating Lights
Emergency Start Indicating Light
Starting Air Compressor Indication Lights
Jacket Water Pump Status Lights
Jacket Water Heater Status Lights
Pre-Lube Oil Pump Status Lights
Pre-Lube Oil Pump Heater "ON" light
Fuel Oil Transfer Pump Status Lights
Jacket Water Temperature Engine Outlet
Lube Oil Temperature Engine Outlet
Turbo Lube Oil Inlet Pressure
Starting Air Compressor 60 Minute Cycle Indication Lights

TABLE 8.3-4

SUMMARY OF INVERTER POWER SUPPLIES

INVERTER	PRIMARY 480-VAC POWER SOURCE	125-VDC POWER SOURCE	ALTERNATE 480-VAC POWER SOURCE
111	137	011-1	137
112	138	111	138
113	139	112	139
114	133	112	133
211	237	011-2	237
212	238	211	238
213	239	212	239
214	233	212	233

BOP PROCESS COMPUTER INVERTER POWER SUPPLIES

INVERTER	PRIMARY 480VAC POWER SOURCE	125VDC POWER SOURCE	ALTERNATE 480VAC POWER SOURCE
1CM050	135-11	113-1	135-2
2CM050	235-11	213-1	235-2

TABLE 8.3-5

STATION BATTERY LOAD PROFILES

STATION BATTERY	TIME (minutes)	LOAD (amperes)
011	0 - 1	385.95
	1 - 2	282.06
	2 - 30	259.01
	30 - 180	79.89
111	0 - 1	614.71
	1 - 2	859.25
	2 - 30	580.11
	30 - 120	347.26
	120 - 180	157.32
	180 - 240	67.20
112	0 - 1	692.08
	1 - 2	787.17
	2 - 30	587.53
	30 - 120	213.15
	180 - 240	42.4
211	0 - 1	559.85
	1 - 2	808.15
	2 - 30	529.01
	30 - 120	296.16
	120 - 180	106.22
	180 - 240	25.60
212	0 - 1	568.78
	1 - 2	663.82
	2 - 30	464.18
	30 - 180	89.8
	180 - 240	31.6

TABLE 8.3-6

125-VDC BATTERY LOAD

Service	Power Required And Duration
Generator air side emergency seal oil pump	25 HP (2 Hours)
Steam generator feed pump turbine emergency bearing oil pump	15 HP (1/2 Hour)
Inverter power supplies for essential services	15 kVA (1/2 Hour)
Control rod position indication inverter power supply	5 kVA (1/2 Hour)
Emergency dc lighting	10 kW (4 Hours)
Diesel generators field-flashing	100 amperes (1 min)
Diesel generators control power	15 amperes (3 Hours)
Turbine controls	10 amperes (1 min)
345-kV OCB and 4160-V and 480-V ACB trip and close	400 amperes (1 min)
Annunciator logic and visual display	8 amperes (3 Hours)
Control valves (actuated by the Reactor Protection - Engineered Safety Features System) and miscellaneous relays and indicating lights	4 kW (3 Hours)

TABLE 8.3-7 (1 of 3)

SUMMARY OF SEISMIC CONSIDERATIONS APPLIED TO ENGINEERED SAFETY AUXILIARY POWER SYSTEM

	EQUIPMENT	LOCATION	SEISMIC DESIGN BASES (MAX ACCELERATION)[1]	TESTS AND ANALYSES
1)	4.16-kV Switchgear: 147, 148, 149	Aux Bldg (El 617′)	0.305g	Representative switchgear units were shock tested at 4, 6, and 10 Hz with accelerations up to and including 3g.
2)	480-V Unit Sub-stations: 137, 138, 139	Aux Bldg (El 617′)		
	a) Switchgear		0.305g	a) Sine-beat tests were performed on representative units up to 25 Hz. The sine-beat peak amplitude was at least 0.5g.
	b) Transformer		0.305g	b) Analysis was performed with the following loadings - 5g vertically, 4g along shipping direction and 3g across the shipping direction.
3)	Motor Control Centers: (including Panel Boards)	Aux Bldg		The equipment was swept in frequency from 5 to 500 Hz at a constant 0.5g input acceleration.
	1371, 1381, 1391	(El 617′)	0.305g	

NOTE 1: Maximum floor acceleration shall be defined as the peak acceleration of that floor as a result of Maximum Credible Earthquake.

TABLE 8.3-7 (2 of 3)

SUMMARY OF SEISMIC CONSIDERATIONS APPLIED TO ENGINEERED SAFETY AUXILIARY POWER SYSTEM

	EQUIPMENT	LOCATION	SEISMIC DESIGN BASES (MAX ACCELERATION)[1]	TESTS AND ANALYSES
3)	Motor Control Centers: (cont.)			
	1383A, 1383B, 1393A, 1393B, 1393C	(El 560′)	0.305g	
	1372	(El 542′)	0.305g	
	1382, 1392	(Crib House El 594′)	0.305g	
4)	DC Distribution Centers:			
	111 & 112	Aux Bldg (El 642′)	0.44g	The equipment was swept in frequency from 5 to 33 Hz at a constant 0.5g input acceleration.
	011	Aux Bldg (El 592′)	0.44g	
5)	DC Panelboards:			
	111, 112, 113	Aux Bldg (El 642′)	0.44g	Sine sweep test was performed on one representative panel. The input was adjusted such that response spectra generated from the table motion was greater than specified floor spectrum.

NOTE 1: Maximum floor acceleration shall be defined as the peak acceleration of that floor as a result of Maximum Credible Earthquake.

TABLE 8.3-7 (3 of 3)

SUMMARY OF SEISMIC CONSIDERATIONS APPLIED TO ENGINEERED SAFETY AUXILIARY POWER SYSTEM

	EQUIPMENT	LOCATION	SEISMIC DESIGN BASES (MAX ACCELERATION)[1]	TESTS AND ANALYSES
6)	DC Batteries and Racks:			Sine sweep test was performed on a representative model from 5 to 25 Hz. The input acceleration was varied such that the response spectrum generated from the input test motion was greater than the specified floor response spectrum for Maximum Credible Earthquake.
	111 & 112	Aux Bldg (El 642′)	0.44g	
	011	Aux Bldg (El 592′)	0.44g	
7)	Battery Chargers:			Representative Equipment was shock tested to at least 3g.
	111, 112	Aux Bldg (El 642′)	0.44g	
	011	Aux Bldg (El 592′)	0.44g	

NOTE 1: Maximum floor acceleration shall be defined as the peak acceleration of that floor as a result of Maximum Credible Earthquake.

TABLE 8.3-8

DIESEL GENERATORS TESTED AT THE COOPER-BESSEMER FACTORY

Diesel Generator (Utility/Station)	Diesel Generator Serial Number	Number of Starts
Nebraska Public Power	7102	21
Nebraska Public Power	7103	21
Zion Station	M07090	5
Zion Station	M07091	5
Zion Station	M07092	5
Zion Station	M07093	25
Zion Station	M07094	25

TABLE 8.3-9

ENGINEERED SAFETY FEATURE EQUIPMENT

Unit	Battery Number	Distribution Panel No.	Diesel Generator	4160 V Swgr Buses	480 V Swgr Buses	Division Number
1	111	111	1A	148	138	18
1	112	112	1B	149	139	19
1	011	011-1	0	147	137	17
2	011	011-2	0	247	237	27
2	211	211	2A	248	238	28
2	212	212	2B	249	239	29

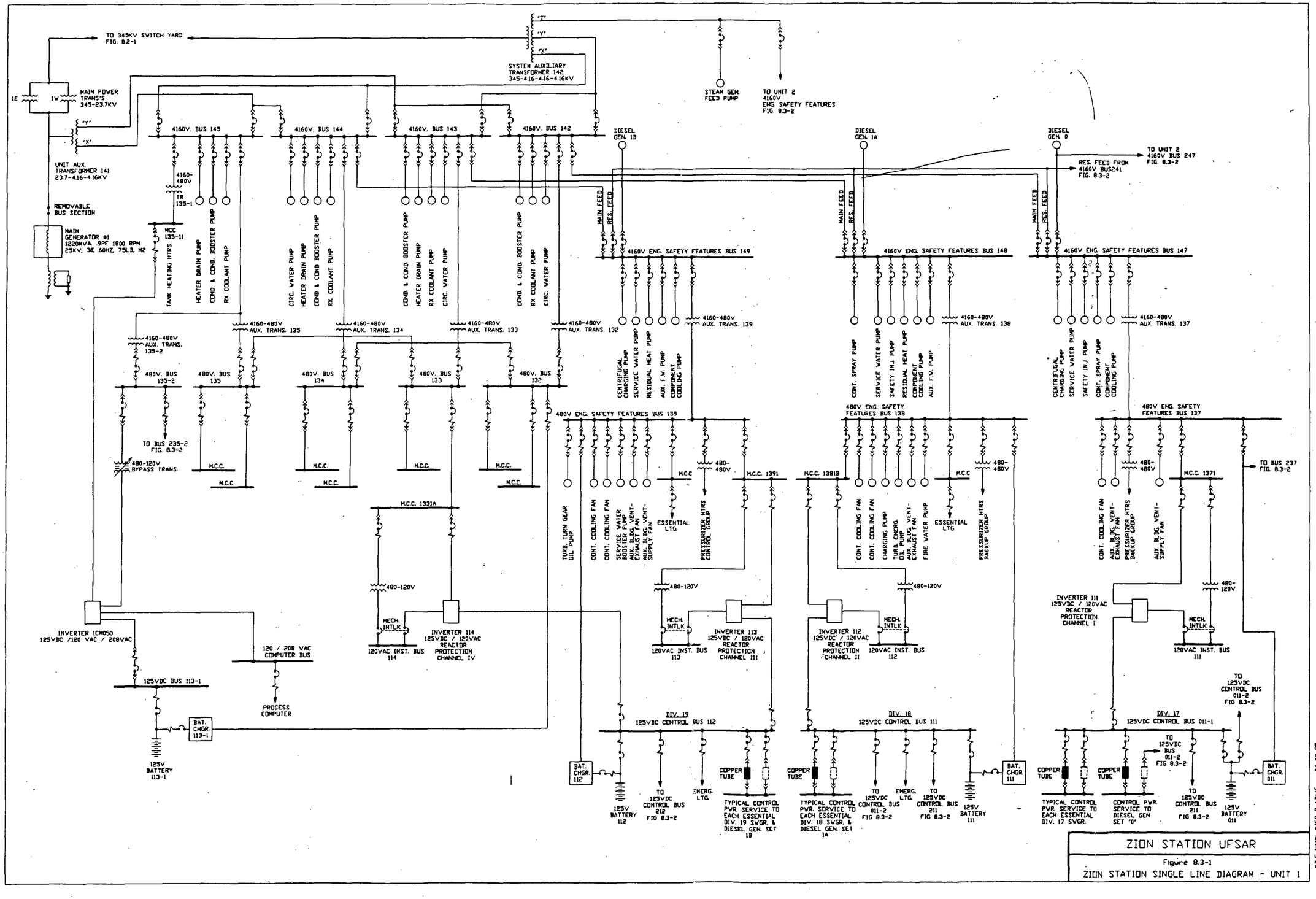

ZION STATION UFSAR

Figure 8.3-1

ZION STATION SINGLE LINE DIAGRAM - UNIT 1

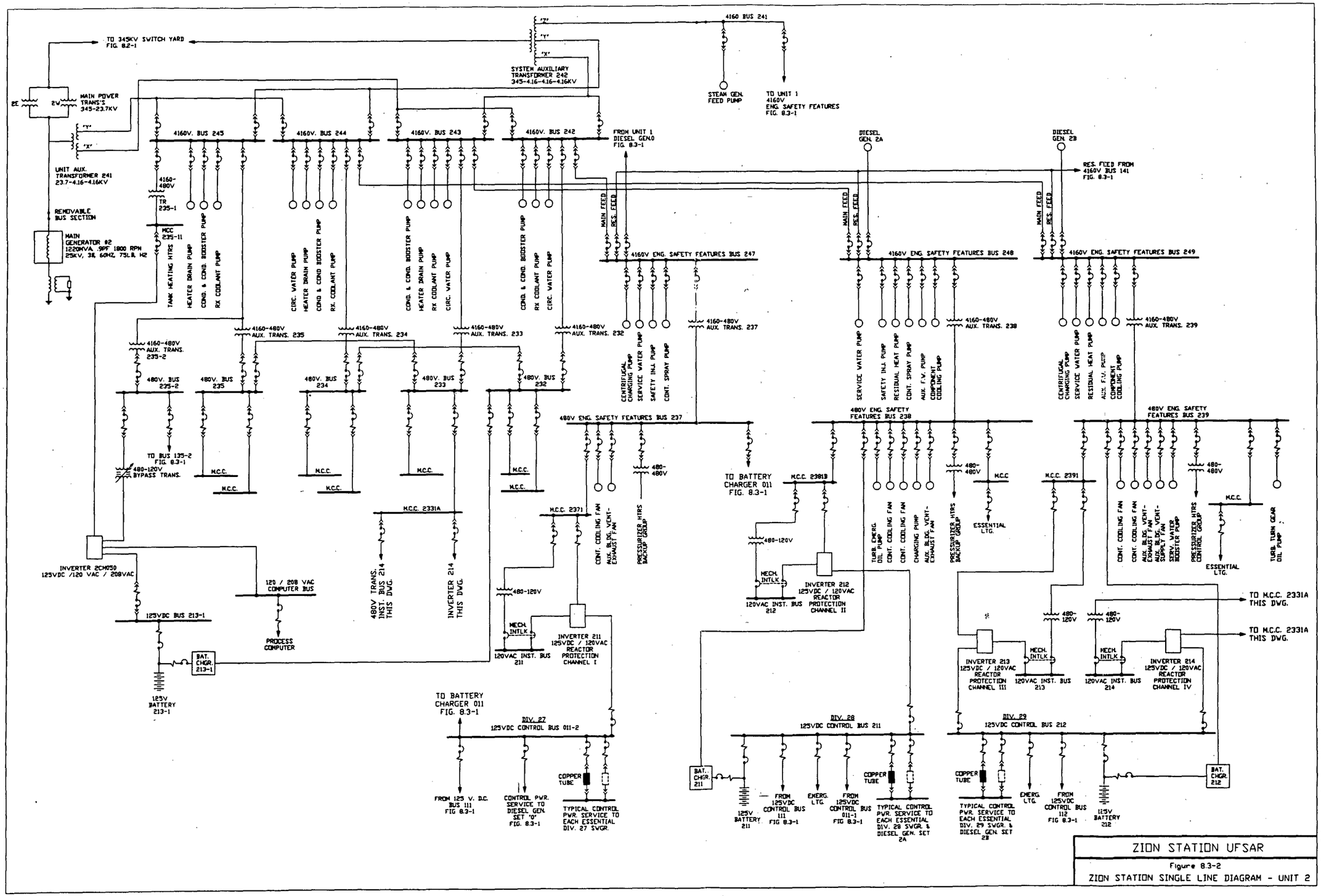

ZION STATION UFSAR

Figure 8.3-2

ZION STATION SINGLE LINE DIAGRAM - UNIT 2

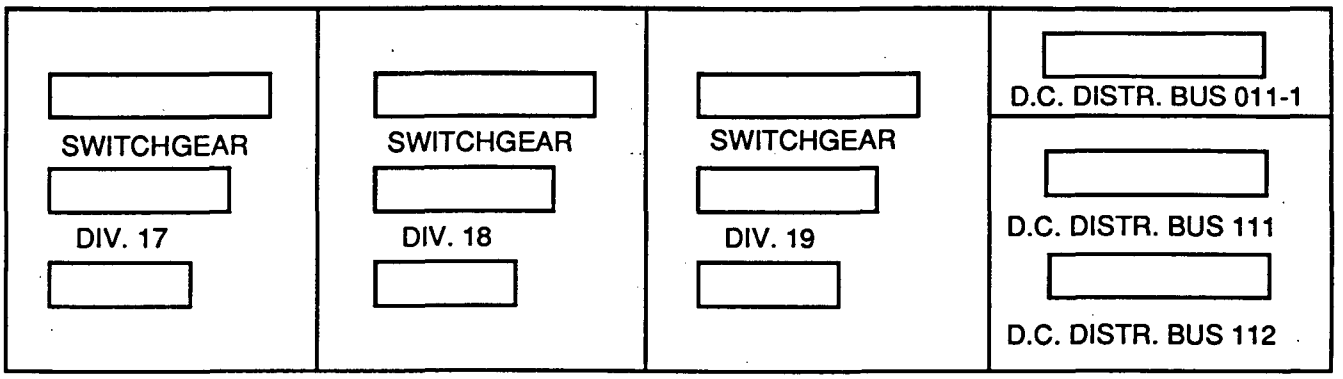

PLAN-ELEV. 2

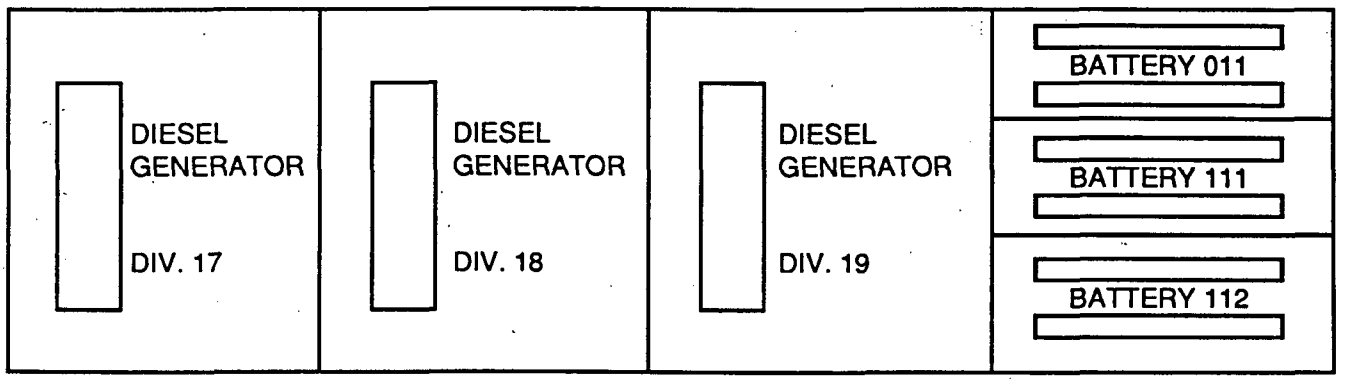

PLAN-ELEV. 1

ZION STATION UFSAR

Figure 8.3-3

SEPARATE ROOMS FOR EACH DIVISION OF ENGINEERED SAFETY FEATURES ELECTRICAL EQUIPMENT UNIT 1

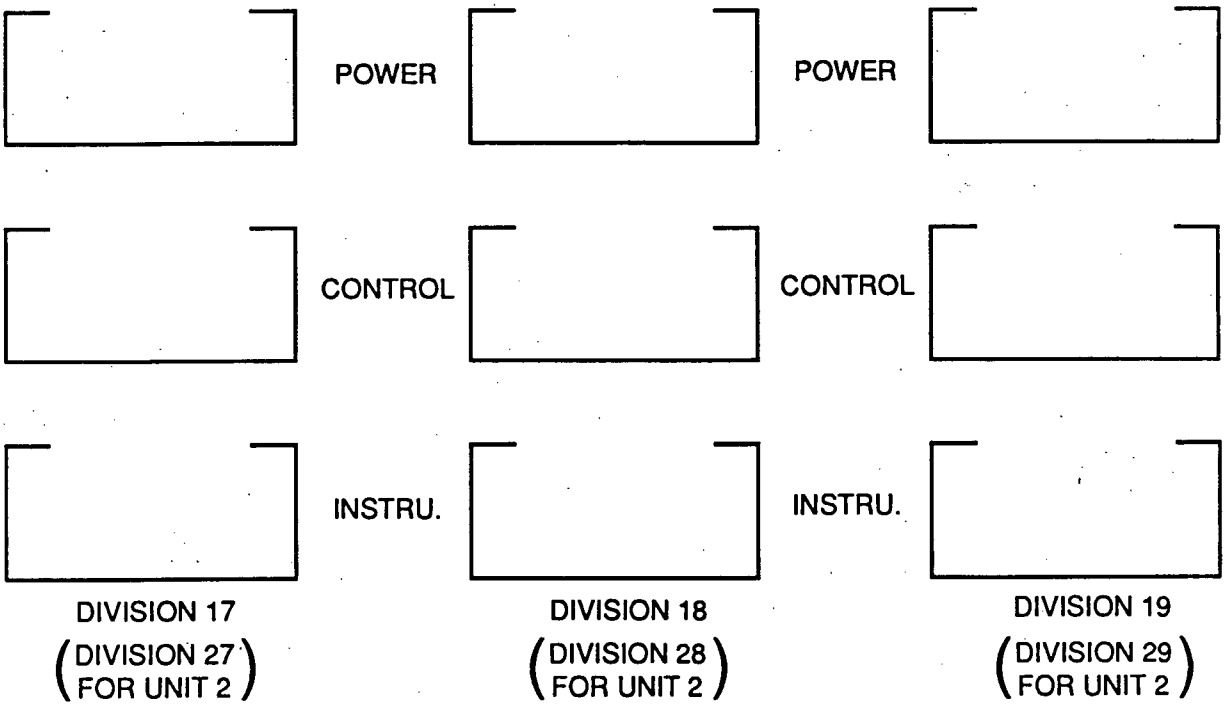

ZION STATION UFSAR

Figure 8.3-4

SEPARATE ENGINEERED SAFETY FEATURES POWER, CONTROL, AND INSTRUMENTATION CABLE TRAYS