SAFETY ANALYSIS REPORT

FOR THE

UNIVERSITY OF FLORIDA TRAINING REACTOR

LICENSE NO. R-56
DOCKET NO. 50-083

REDACTED VERSION

SECURITY-RELATED INFORMATION REMOVED

Redacted text and figures blacked out
or denoted by brackets

Final Safety Analysis Report
for the
University of Florida Training Reactor

Submitted to the
U.S. Nuclear Regulatory Commission
In Partial Fulfillment
of the Requirements for a
Class 104 License Pursuant to
Code of Federal Regulations, Title 10, Part 50

Pramod P. Khargonekar, Dean
College of Engineering
University of Florida
Gainesville, Florida

July, 2002

Table of Contents

Chapter

Table of Contents

Index of Tables

Index of Figures

1 The Facility

1.1 Introduction

The University of Florida Training Reactor (UFTR) is located on the campus of the University of Florida at Gainesville, in Alachua County, Florida. Gainesville is approximately in the center of Alachua County, which covers 961 square miles in the north-central part of Florida. The University of Florida campus is located approximately one mile from the center of the city of Gainesville.

The UFTR is a modified Argonaut type reactor, a light water and graphite moderated, graphite reflected, light water cooled reactor. The UFTR is currently licensed for 100 kW (thermal) steady state power with a maximum power of 125 kW (thermal) limited by the protection system. The UFTR originally operated from December 1959 under License Number R-56 at power levels up to the maximum of 10 kW; in 1964, the license was amended to allow operation at power levels up to the current 100 kW rating[1].

This Safety Analysis Report is submitted for license renewal without substantive changes from the previously licensed facility. The information and analyses presented in this Safety Analysis Report (SAR) show that the UFTR can continue to be operated at 100 kW (thermal) rated power without undue risk to the health and safety of the public.

1.2 Summary and Conclusions on Principal Safety Considerations

The UFTR is a reactor used for instructional and university research activities; therefore, it is designed so that safety is maximized without excessive **constraints** on the different activities planned. As quoted in Reference [2], the inherent safety of the UFTR is based on four design features. First, the amount of excess reactivity in the reactor is limited to less than 2.3% $\Delta k/k$. Second, the reactor has negative temperature and void coefficients. In addition, the reactor is provided with sufficient interlocks and safety trips to make a hazardous incident extremely improbable.

Third, the amount of contained fission products is relatively small. And fourth, there is an extremely low probability that these fission products can escape. Nevertheless, because of the high population density of the campus, the reactor is housed in a structure with a minimum number of penetrations sealed against gas leakage. A negative pressure is maintained in the reactor cell such that air and airborne contaminants within the cell are withdrawn by means of the reactor vent system through a filter system which is continuously monitored for radiation and radioactivity.

Possible failures or accident situations have been analyzed and discussed in Chapter 13, including the effects of a rapid reactivity insertion, radioactive fission product release and loss of coolant flow in the case of 100 kW (thermal) operation of the UFTR. Studies performed and the past experience of UFTR operation lead to the

conclusion that the UFTR can continue to be operated without undue risk to the health and safety of UFTR employees and the general public.

1.3 General Description

The University of Florida campus is located in the Southwestern quadrant of the greater Gainesville area which has a 2000 census population counting of about 217,955 [3].The population within the city limits in 2000 was about 95,447 [3]. It is approximately one mile from the center of the city (University Avenue and Main Street).

The University of Florida was established by an act of the Florida Legislature in 1905, and has a current enrollment of about 46,107 students in the fall term of 2000. Fall enrollment for three preceding years and fall 1990 has been as follows:

Fall 99	44,276
Fall 98	43,327
Fall 97	42,053
Fall 90	36,531

Expected continued but slow growth will make these figures representative for several years.

The UFTR is located on campus in the immediate vicinity of the buildings housing the College of Engineering and the College of Journalism. The Nuclear Sciences Center, which houses the Department of Nuclear and Radiological Engineering, is annexed to the reactor building. Normal access to the reactor building is through the doors leading from the Nuclear Sciences Center. Authorized personnel may also enter the reactor building by other routes through normally locked doors on a keyed basis only. Ordinary access by these alternate routes is restricted to approved personnel by keeping the other doors to the reactor building locked at all times.

Most of the Gainesville area, including the site of the training reactor is underlain by a loamy fine-sand type of soil derived from residual weathering of the "Hawthorne Formation". Except where buildings and landscaping intervene, the present contour of the site rises on a 16 percent slope from west to east; consequently, the reactor building is partially buried in the side of a hill. The construction of the reactor facility, access control, and standard procedures are designed to prevent or minimize injury in the event of aircraft crash, civil disturbance, attempted sabotage and other externally-derived events. [4]

The UFTR is of the general type known as the Argonaut, with some modifications to adapt it to a university training program by improving shielding and minimizing the possibility of accident. The reactor is heterogeneous in design, currently using 93 percent enriched uranium-aluminum fuel elements. Design and safety analyses have been performed to investigate the possibility of using low enriched uranium (LEU) fuel in the

UFTR core. This analysis for the fuel change is planned to be submitted in the near future. Water is used as the coolant and also as moderator. The remainder of the moderator consists of graphite blocks which surround the boxes containing the fuel plates and the water moderator. The fuel is contained in MTR-type plates assembled in bundles. Each bundle is composed of 11 fuel plates, each of which is a sandwich of aluminum clad over a uranium-aluminum alloy "meat".

There are four control blades (3-safety and 1-regulating), of the swinging-arm type, consisting of four cadmium vanes protected by magnesium shrouds which operate by moving in a vertical arc within the spaces between the fuel boxes. These blades are moved in or out by mechanical drives or they may be disconnected by means of electromagnetic clutches and allowed to fall into the reactor. The drives, located outside the reactor shield for accessibility, are connected to the blades by means of long shafts. An isometric sketch of the UFTR reactor facility with shielding removed is presented in Figure 1-1.

The biological shield is made of cast-in place concrete with sections of barytes concrete carefully located to reduce the overall shield thickness. Access to the ends and top of the reactor is provided by removal of ordinary concrete blocks cast to fit openings.

The reactor core has a two slab geometry and is presently composed of 21 ½ fuel bundles and 2 ½ dummy bundles arranged in six water-filled aluminum boxes, surrounded by reactor grade graphite. These dummy assemblies may be replaced by full or partial fuel assemblies as needed to achieve the desired or required excess of reactivity.

All reactor operations are supported by the following systems:

1. Reactor instrumentation, protection and control
2. Primary coolant system
3. Secondary coolant system
4. Primary water make-up system
5. Purification system
6. Reactor vent system
7. Shield water tank system
8. Radiation monitoring system
9. Radioactive waste disposal system

The primary coolant (demineralized) water is pumped upward around the fuel plates and then fed by gravity through the side orifices to the heat exchanger, where the primary coolant transfers the heat from the reactor. The heat is removed by the secondary coolant system to the storm sewer. There is no mixing of water between the two systems.

The reactor protection system provides reactor trips that can be classified into two groups; nuclear instrument and process instrument-type trips. The nuclear-type trips are

full reactor trips, causing the dumping of the primary water besides the standard drop of control blades, and include:

1. Fast period
2. Exceeding maximum allowable power (125%)
3. A 10% reduction of high voltage to the neutron chambers.

Process instrument-type trips, also called rod-drop trips, cause the drop of control blades without dumping of the primary water, and include the nine (9) items in the following list:

1. Loss of power to the reactor vent blower system.
2. Loss of power to the reactor vent diluting system.
3. Loss of power to the reactor secondary system deep well pump when at or above 1 kW.
4. Loss of power to the primary coolant pump.
5. Drop of secondary flow below 60 gpm.
6. Drop in shield water tank below set point.
7. Reduction of primary coolant flow below 30 gpm (inlet).
8. Loss of primary coolant level (outlet).
9. High temperature of primary coolant returning from the reactor.

As usual, manual reactor trip is also available at all times.

The Radiation Control Office is responsible for implementing the radiation protection program. Aside from this task, the Radiation Control Office performs the following services for the reactor:

1. Personnel monitoring service.
2. Radiation instrument calibration and maintenance.
3. Radioactive material handling and safety procedures.
4. Decontamination.
5. Solid and Liquid Radioactive Waste Disposal.

Radioactive waste transfers may be made directly to a carrier or licensed waste processor within UFTR site assuring the requirements of 10 CFR 71.5 are met or radioactive waste may be transferred to the Radiation Control Office representing the University and its separate radioactive material license. Labeling and bagging of waste is the responsibility of UFTR personnel after specific authorization of the Director of the Nuclear Facilities and the Radiation Control Officer. All pertinent information must be provided to the Radiation Control Office by the UFTR personnel. These and any other matters concerning radiation safety procedures are covered in detail in the "Standard Operating Procedures" manual of the UFTR. [2]

The major experimental facilities in the UFTR are illustrated in the vertical view line drawing of the UFTR shown in Figure 1-2 and include:

1. Sixteen (16) vertical foil slots placed at intervals in the graphite between the fuel compartments, each are 3/8 in. x 1 in. - infrequently used.
2. Three (3) vertical experimental holes located centrally with respect to the six (6) fuel compartments (boxes):
   i) Center Vertical Port (CVP) with 2 inch diameter
   ii) West Vertical Port with 1 1/4 inch diameter
   iii) East Vertical Port with 1 1/2 inch diameter

3. Five (5) vertical square holes filled with 4 inch x 4 inch removable graphite stringers;
4. A horizontal thermal column having six (6) 4 inch x 4 inch removable stringers flanked on each side by 2 additional thermal column positions with removable stringers which are infrequently used;
5. A shield tank placed against the west face of the reactor opposite the fuel boxes and thermal column;
6. Six (6) horizontal openings, 4 inches in diameter, located symmetrically on the center plane of the reactor and normally filled with shield plugs, only one of which (south) goes all the way to the core region; and
7. A removable horizontal throughport consisting of a 2.05 inch ID aluminum tube with 20 ft. length running east-west across the reactor. Shield plugs or other shielding appropriate to experiments in progress are normally inserted into these ports which are clearly identified in Figure 1.2. A pneumatic-operated rapid sample insertion device is normally inserted in the west throughport access.

As quoted in Section 1.4, the safety rods have the following experimentally verified reactivity worths measured in October 2001:

Safety 1 with 1.22% Δk/k
Safety 2 with 1.35% Δk/k
Safety 3 with 1.83% Δk/k

with the regulating blade having a total worth of ~0.81% Δk/k. The maximum allowable worth of any single unconstrained experiment is 0.6% reactivity. The measured shutdown margin with the most reactive blade out was 2.99% Δk/k in October, 2001.

Electrical instrumentation and control (EI&C) drawings for the UFTR reactor system are presented in Figures 1-3 through 1-8 in this section taken from Chapter 7. For uniformity of nomenclature, abbreviations used in the drawings for the UFTR are defined in Table 1-1.

1.4 Comparison Tables

The UFTR which has been operational since May, 1959, is currently licensed for operation at 100 kW (thermal).

All similar Argonaut research reactors in the United States have been shutdown; they were located at the University of Washington, University of California at Los Angeles (UCLA), Iowa State University and at Virginia Polytechnic Institute. A similar Argonaut research reactor is in operation at "Universite of Strasbourg" France[5]. A comparison of the nuclear characteristics of the UFTR to those of the UCLA Nuclear Reactor is shown in Table 1-2. The UCLA Nuclear Reactor was chosen because of the great similarity between the UCLA R-1 reactor and the UFTR as briefly described in the following paragraphs [6][8] [9].

The 100 kW UCLA Argonaut Reactor (UCLA R-l) consisted of a core of six aluminum boxes arranged in two parallel rows of three boxes each, the rows being separated by and surrounded with graphite. Four fuel bundles were placed within each box, each bundle consisting of 11 uranium-aluminum alloy fuel plates clad with aluminum. The graphite on one side of the reactor was extended to provide a thermal column, and on the opposite side was placed a water shield tank as in the UFTR design. Completely surrounding the shield water tank, thermal column, and core was a concrete shield of external dimensions approximately 18 feet in all directions equipped with several beam ports and access tubes. The UFTR also has such a concrete shield.

The primary coolant of the UCLA Argonaut reactor as with the UFTR was demineralized water which was pumped upward over the fuel plates and then fed by gravity to the system heat exchanger where it was cooled by the secondary coolant flowing directly from the city water line. The secondary coolant flowed from the heat exchanger to a holdup tank with a retention time of approximately 15 minutes before it was dumped into a municipal storm drain. The coolant system for the UCLA R-1 Reactor is shown in Figure 1-9 [6]; it is very similar to the UFTR cooling system presented in Chapter 5 of this Safety Analysis Report.

The nuclear characteristics of the UFTR are also similar to those of other water-moderated reactors using similar fuel plates such as the LITR, MTR, BSTF, Borax I, II and III, and Argonaut [7].

1.4.1 Comparison of Final and Preliminary Information

This Safety Analysis Report is submitted for license renewal without substantive changes from the previously licensed, with approved modifications, UFTR reactor system. As such this current Safety Analysis Report stands as the FSAR for the UFTR license renewal effort.

1.5 Summary of Operations

The UFTR is operated by and within the Department of Nuclear and Radiological Engineering with the College of Engineering of the University of Florida with the

purpose of providing instruction and training, supporting research operations and providing a range of irradiation services.

During the past 20 years, (since license renewal) the UFTR has been experiencing a high rate of utilization. Table 1-3 presents a summary of the annual reactor usage/availability data. As shown in Table 1-3, the maximum annual average availability observed, since the license renewal in 1982, was 91.50% in the period from Sep.1, 1986 to Aug.31, 1987. The minimum annual average availability observed was 4.01% in the period from Sep.1 1988 to Aug. 1, 1999. This extremely low availability of the reactor was primarily due to an over eleven month outage to investigate a core reactivity anomaly. On average the UFTR presents an annual average availability of 76.09%.

The broad-based UFTR utilization has been supported by a variety of usages including research and educational utilization by users within the University of Florida as well as by other researchers and educators around the State of Florida and the Southeast through the support of the Department of Energy (DOE) Reactor Sharing Program and several externally supported usages. The continuing refurbishment of the Neutron Activation Analysis (NAA) Laboratory has been impacting favorably on all areas of utilization from research projects using neutron activation analysis to training and educational uses for students at all levels. Reactor use by University of Florida courses and laboratories has been at substantial levels. Course and department usages within the University range from the Environmental Engineering Sciences Department in its Heath Physics and other courses to the Physics Department at the undergraduate level to the Chemistry Department in several courses as well as a graduate level isotope course in the Geology Department to mention a few. Another frequent user is the freshman Introduction to Engineering course for introducing new prospective engineering students to various areas of engineering.

Table 1-4 shows the UFTR annual total energy generation since 1971. Analysis of the facility utilization shows that the diverse usage and good but decreased energy generation noticed from 1995 are attributable to the lack of any mega-projects requiring lengthy irradiations in favor of educational usages.

Expectations for the next years are to maintain the rate of utilization and continue to increase utilization to reach ever higher UFTR utilization levels. The possibilities for continued growth in existing and new program areas are challenges that are being addressed positively.

1.6 Compliance with the Nuclear Waste Policy Act of 1982

The UFTR high enriched fuel (HEU) is supplied by the Department of Energy (DOE) through the University Reactor Assistance Program. All UFTR HEU used and spent fuel is to be returned to DOE under the same agreement.

1.7 Facility Modifications and History

This Safety Analysis Report is serving as both Preliminary Safety Analysis Report (PSAR) and the Final Safety Analysis Report (FSAR) for the UFTR facility because it is not a new design. The UFTR is already licensed and has been operational since May, 1959 when it was first licensed to operate at 10 kW (License Number R-56). The current SAR is submitted to support relicensing of the existing system as currently operated at a rated power of 100 kW under License Number R-56 Amendment Number 8 effective January 28, 1964. No substantive changes are being proposed in this SAR. No further technical information should be required in support of the issuance of the renewed Operating License at 100 kW (thermal).

During the past 20 years a number of modifications have been made to the operating characteristics or capabilities of the UFTR directly related facilities. These modifications were all subjected to 10 CFR 50.59 evaluations and then determinations (as necessary) to assure that no unreviewed safety questions were involved. Most of the modifications were implemented to substitute electronic/mechanic components by equivalent components, to improve systems to meet new requirements or to improve the overall installation. Table 1-5 contains a list of the major modifications implemented and respective modification numbers as described in the annual progress reports of the UFTR. All modifications were incorporated in the SAR, Technical Specification or Standard Operating Procedures at the time they were implemented when deemed applicable.

Table 1-6 presents the UFTR amendments issued since the license renewal in 1982 and a brief description of each one. Most of these amendments were administrative in nature.

Table 1-1 Abbreviations used in UFTR Electrical Instrumentation and Control Diagrams

AMM	AMMETER
AMP	AMPLIFIER
AUTO	AUTOMATIC
B/S	BISTABLE
CAL	CALIBRATE
CIC	COMPENSATED ION CHAMBER
COMPA	COMPARATOR
COMPUT	COMPUTER
CPS	COUNTS PER SECOND
DN	DOWN
HV	HIGH VOLTAGE
INT'LK	INTERLOCK
LIN	LINEAR
LOG	LOGARITHMIC
MAG	MAGNETIC CLUTCH
MAN	MANUAL
NI	NUCLEAR INSTRUMENTATION
P/S	POWER SUPPLY
PA	POWER AMPLIFIER
PC	PRIMARY COOLANT
PWR	POWER
REG	REGULATING BLADE (ROD)
RPI	CONTROL BLADE (ROD) POSITION INDICATION
UIC	UNCOMPENSATED ION CHAMBER
W/D	WITHDRAWAL
W/R	WIDE RANGE DRAWER (CHANNEL)

Table 1-2 Comparison Table - Argonaut Reactor Characteristics

	UFTR *	UCLA R-1 **
Type	Heterogeneous, Thermal	Heterogeneous, Thermal
Thermal power	100 kW	100 kW
Flux level (at full power)	1.8 $x10^{12}$ nt/cm^2sec in center vertical port	1.5 $x10^{12}$ nt/cm^2sec-Thermal 1.8 $x10^{12}$ nt/cm^2sec- Epithermal 2.0 $x10^{10}$ nt/cm^2sec- Fast
Excess of reactivity	1.0 %Δk/k	1.85%Δk/k
Clean, cold critical mass	[ ]	3,194.4 g U-235
Effective prompt neutron lifetime	2.8 x 10^{-4} sec	2.0 x 10^{-4} sec
Uniform water void coefficient	-0.20 %Δk/k/%voids	-0.164 %Δk/k /%voids
Moderator Temperature Coefficient	-0.3 $x10^{-4}$ Δk/k/F	-0.865 $x10^{-4}$ Δk/k/°C
U-235 Mass coefficient	0.4%Δk/k/%U-235g	0.3 %Δk/k / %U-235g
Startup source	SbBe ≤ 25 curies or PuBe ≈ 1.0 curies	6.6 mCi Ra-Be
Reflector	Graphite (1.6 gm/cc)	Graphite (1.6 gm/cc)
Moderator	H_20 and graphite	H_20 and graphite
<u>Fuel</u>		
Assemblies	24 bundles	24 bundles
Plates per assembly	11	11
Fuel material	U-Al alloy	U-Al alloy
Fuel enrichment	93%	19 bundles: 93.18% U-235 5 bundles: 93.123% U-235
Fuel Loading	3354.61 g U-235	3356.86 g U-235, excluding burnup
Plate Thickness	0.070 in	0.070 in
Thickness U-Al	0.040 in	0.040 in

Fuel (continued)		
Thickness Clad	0.015 in.	0.015 in.
Plate width	2.845 in.	2.845 in.
Plate length	25.625 in.	25.625 in.
Water Channel Spacing	0.137 in	0.137 in
Al to H_2O volume ratio	0.49	0.51
"Meat" Composition	14.5 wt.% U-Al alloy	13.4 wt.% U-Al alloy
Coolant		
Type	Demineralized H_2O	Demineralized H_2O
Minimum resistivity	5×10^5 ohm-cm	5×10^5 ohm-cm
Normal resistivity	~1×10^6 ohm-cm	~1×10^6 ohm-cm
Primary flow	40 gpm (scram at 30gpm)	16 gpm
Secondary flow	200 gpm (nominal)	22.5 gpm
Primary Equilibrium Temperature Inlet (100kW)	86°F ± 2°F	100°F ± 5° F
Primary Equilibrium Temperature Outlet (100 kW)	103°F ± 2°F	142°F ± 5°F
Secondary Well Water Equilibrium Inlet/Outlet Temperatures	73°F/ 77°F	---
Control Blades		
Type	Cd, swinging vane, gravity fall	Cd, swinging vane, gravity fall
Number	3 safety, 1 regulating	3 safety, 1 regulating
Insertion Time	1.0 sec (maximum)	1.0 sec (maximum)
Removal Time	~ 100 sec (minimum)	~ 100 sec.
Blade Worth, Safety	Safety #1 1.22 %Δk/k Safety #2 1.35 %Δk/k Safety #3 1.83 %Δk/k	Safety #1 1.56%Δk/k Safety #2 1.68%Δk/k Safety #3 1.60 %Δk/k

Control Blades (continued)		
Blade Worth, Regulating	0.81%Δk/k	1.01 %Δk/k
Minimum shutdown margin (with most reactive blade out)	2.99 %Δk/k	2.31 %Δk/k
Reactivity addition rate, maximum allowed	0.06 %Δk/k/sec	0.77 %Δk/k
Experimental Facilities		
Thermal column, horizontal	60 in x 60 in x 56 in high	60 in x 52 in x 43 (long) removable
Thermal column, vertical	2 ft diameter x 6 ft; H_2O or D_2O	Provision for installation
Shield test tank	5 ft x 5 ft x 14 ft high	5 ft x 5 ft x 14 ft 6 in. deep
Experimental holes	6 horizontal, 4 in diameter 5 vertical, 4 in x 4 in 3 vertical, 2,1 1/2, 1 1/4 in diameter	2 horizontal, 6 in. diameter 4 horizontal , 4 in diameter 3 vertical, 1 7/8 in diameter
Foil Slots	16 vertical, 3/8 in x 1 in	16 vertical, 3/8 in x 1 in
Horizontal Throughport	2.05 in ID x 20 ft length	-----
Removable Thermal column dry room	----	56 in. x 56 in x 40 in long (east-west)
Shield ventilation	250 cfm, room air	----
Shield concrete		
Sides, center	6 ft., cast, barytes	6 ft., cast, barytes
Sides, ends	6 ft.9 in., cast, barytes	6 ft.9 in., cast, barytes
Middle	Barytes concrete blocks	Cast concrete blocks
Top	5 ft. 10 in.	5 ft.10 in. magnetite blocks
End	3 ft. 4 in.	3 ft. 4 in. magnetite blocks

*** Values from UFTR are taken primarily from Reference [7] except for those based on more current records or measurements.**

**** Values for the UCLA R-1 reactor system are taken from UCLA R-1 reactor characteristics chart dated April, 1978[8] plus Howard's Thesis [9] on redesign of the UCLA R-1 system where the information was not available in the characteristics chart of April, 1978.**

Table 1-3 UFTR Annual Reactor Usage/Availability Data

Period	Annual Totals			
	Key-On Time (hours)	Experiment Time (hours)	Run Time (hours)	Average Availability
Sept.1, 1982 – Aug. 31, 1983	-	-	-	-
Sept.1, 1983 – Aug.31, 1984	-	-	-	-
Sept. 1, 1984– Aug. 31, 1985	678.70	1338.32	607.12	79.80%
Sept. 1, 1985 – Aug. 31, 1986	446.10	1216.00	387.16	52.30%
Sept. 1, 1986 – Aug. 31, 1987	620.30	1343.11	552.52	91.50%
Sept. 1, 1987 – Aug. 31, 1988	645.00	1828.34	568.35	79.20%
Sept. 1, 1988 – Aug. 31, 1989	815.10	1927.48	740.40	87.64%
Sept. 1, 1989 – Aug. 31, 1990	544.60	1845.73	489.59	67.18%
Sept. 1, 1990 – Aug. 31, 1991	391.40	1904.00	333.61	74.00%
Sept. 1, 1991 – Aug. 31, 1992	455.90	1893.98	399.99	72.91%
Sept. 1, 1992 – Aug. 31, 1993	650.10	2149.58	585.92	87.33%
Sept. 1, 1993 – Aug. 31, 1994	581.70	2369.16	524.16	89.69%
Sept. 1, 1994– Aug. 31, 1995	495.10	2158.84	446.73	88.34%
Sept. 1, 1995 – Aug. 31, 1996	468.30	2255.58	402.19	75.56%
Sept. 1, 1996 – Aug. 31, 1997	351.20	1943.08	301.46	66.67%
Sept. 1, 1997 – Aug. 31, 1998	217.60	1817.47	189.45	58.65%
Sept. 1, 1998 – Aug. 31, 1999	92.70	2020.34	68.00	4.01%
Sept. 1, 1999 – Aug. 31, 2000	409.60	2526.25	409.29	88.19%
Sept. 1, 2000 – Aug. 31, 2001	365.10	2618.51	335.73	58.47%
		**Average Availability		76.09%

** The availability of year 1998 - 1999 wasn't taken into account due to the lengthy outage, over for maintenance.

Table 1-4 **History of UFTR energy generation since reaching the licensed 100 kWth power level following system modifications in 1970***

Reporting Period	kW-hr Generated	Hours at Full Power
Sept. 1, 1971 – Aug. 31, 1972	29,873.67	Not abstracted
Sept. 1, 1972 – Aug. 31, 1973	23,039.54	Not abstracted
Sept. 1, 1974 – Aug. 31, 1974	8,904.37	78.8
Sept. 1, 1974– Aug. 31, 1975	48,835.15	425.18
Sept. 1, 1975 – Aug. 31, 1976	12,388.62	116.74
Sept. 1, 1976 – Aug. 31, 1977	25,388.14	243.67
Sept. 1, 1977 – Aug. 31, 1978	26,375.80	248.02
Sept. 1, 1978 – Aug. 31, 1979	9,079.30	84.85
Sept. 1, 1979 – Aug. 31, 1980	9,800.14	90.97
Sept. 1, 1980 – Aug. 31, 1981	15,200.63	138.88
Sept. 1, 1981 – Aug. 31, 1982	8.438.50	77.30
Sept. 1, 1982 – Aug. 31, 1983	14,479.80	136.50
Sept. 1, 1983 – Aug. 31, 1984	47,287.42	458.17
Sept. 1, 1984– Aug. 31, 1985	35,878.93	345.69
Sept. 1, 1985 – Aug. 31, 1986	19,287.74	186.48
Sept. 1, 1986 – Aug. 31, 1987	29,748.73	280.77
Sept. 1, 1987 – Aug. 31, 1988	26,676.61	250.38
Sept. 1, 1988 – Aug. 31, 1989	35,198.20	325.18
Sept. 1, 1989 – Aug. 31, 1990	24,700.06	240.06
Sept. 1, 1990 – Aug. 31, 1991	17,519.12	196.21
Sept. 1, 1991 – Aug. 31, 1992	21,904.23	209.96
Sept. 1, 1992 – Aug. 31, 1993	33,942.56	330.38
Sept. 1, 1993 – Aug. 31, 1994	28,798.22	265.81
Sept. 1, 1994– Aug. 31, 1995	27,598.90	263.22
Sept. 1, 1995 – Aug. 31, 1996	21,346.83	197.21
Sept. 1, 1996 – Aug. 31, 1997	16,904.11	143.89
Sept. 1, 1997 – Aug. 31, 1998	11,615.24	105.77
Sept. 1, 1998 – Aug. 31,1999	3,428.54	21.6
Sept. 1, 1999 – Aug. 31,2000	19,386.79	189.25
Sept. 1, 2000 – Aug. 31,2001	21,743.89	203.81

* The licensed amendment to upgrade UFTR rated power to 100 kWth was granted in 1964. After a number of years operation, system repairs and modifications were made in 1970. Following these modifications, the UFTR first reached 100 kWth in 1971.

Table 1-5 Summary of major modifications and/or changes in conditions made to the operational characteristics or capabilities of the UFTR during the 1981-2001 period

Year	Modification	
	No.	Description
1981-1982	-	-
1982-1983	-	-
1983-1984	83-A	Extensive review of the UFTR Technical Specifications
	83-B	Extensive review of the Standard Operating Procedures
	84-6	Replacement of Vent System Manometers
1984-1985	84-7	Addition of secondary water flow sensors (rotameters)
	85-2	UFTR building automatic fire alarm system upgrade
1985-1986	86-14	Design, installation, testing of new pneumatic delivery rabbit system.
1987-1988	88-21	Vertical plug material modification
1988-1989	89-02	Redesign of shield plugs for center and east vertical ports
	89-06	Neutron radiography shielding assembly implementation
1989-1990	-	
1990-1991	90-04	UFTR console two-pen recorder replacement
1991-1992	92-04	Installation of new manometers on core vent system
	92-06	Installation of the UFTR thermocouple system: implementation of terminal strips and quick disconnects
1992-1993	93-01	A/C Condensate Drain Line Rerouting from external UF sewer to UFTR waste water holdup tanks.
1993-1994	93-06	Conversion of blade position indicators from using Nixie tubes to using light emitting diodes (LED)
	93-09	Installation of city water throttle valve and flow meter
1994-1995	94-06	Implementation of AMS air sampler to meet Tech Spec for Air Particulate Detector
	94-07	Pneumatic delivery rabbit system upgrade
	95-02	UFTR building roof replacement
1995-1996	--	--
1996-1997	96-09	Remote fuel element handling tool modification
1997- 1998	97-10	Installation of current sensor for PC level trip surveillance
1998-1999	99-04	Modification/upgrade of effluent discharge system for reactor building
1999-2000	00-01	Reactor cell west wall penetration to connect aboveground waste water holdup tank.
2000-2001	01-01	Replacement of failed two-pen recorder.
	01-03	Temperature recorder/monitor replacement including software generated trip function.

Table 1-6 UFTR License Amendments since License Renewal in 1982

#	NRC Approval date	Description	Documents/Sections Affected
13	08/30/82	- Renew the operating license for 20 years	
14	03/06/84	- Add section 6.6.3	TS Section 6.6.3
15	06/27/84	- Correct typographical and administrative errors and clarify the intent of certain requirements	TS pages 2,5,8,9,10,12,15,17,20,21,23,24,28,35
16	11/25/85	- Correct typographical error. Change numbering of section 3.5	TS section 3.5 page 12
17	04/27/88	- Reorganize sections 3.3 and 3.4. - Allow to conduct certain activities when reactor is shutdown. - Include a backup means for quantifying the radioactivity in the effluent during abnormal or emergency operating conditions.	TS Sections 3.3 and 3.4, pages 10, 11 and 12
18	03/25/93	- Change to allow 4 months for submission of UFTR annual report. - Correct NRC address	TS Section 6.6.1 and 6.6.1(7) page 36 and 37.
19	03/04/94	- Update the limitation on the discharge of Argon-41 per new 10CFR Part 20. - Remove references to upgrade UFTR to 500 kWth.	TS Sections 3.4.2(3), 3.4.5 (2) and 7.0, pages 11, 12, 40.
20	02/06/95	- Refer to relevant sections of 10 CFR Part 20. - Describe more accurately releases into the sanitary sewage system	TS Sections 3.4.5(1) and (2) and 4.2.4(3), pages 12 and 20.
21	10/10/96	- Change to allow 6 months for submission of UFTR annual report	TS Section 6.6.1 page 36
22	12/03/97	- Change the name of the Department of Nuclear Engineering Sciences to Department of Nuclear and Radiological Engineering. - Change NRC mailing address.	TS Section 6.2.5 (1) and (2), Figure 6.1 and Section 6.6.1, pages 30, 32, 37.
23		- Change the fuel inspection from biennially to five years intervals	T.S. Section 4.2.7 Paragraph (1)

[

]

Figure 1-1 Isometric Sketch of the UFTR with Shielding Removed

[

]

Figure 1-2 Vertical View Line Schematic of Major Experimental Facilities in the UFTR

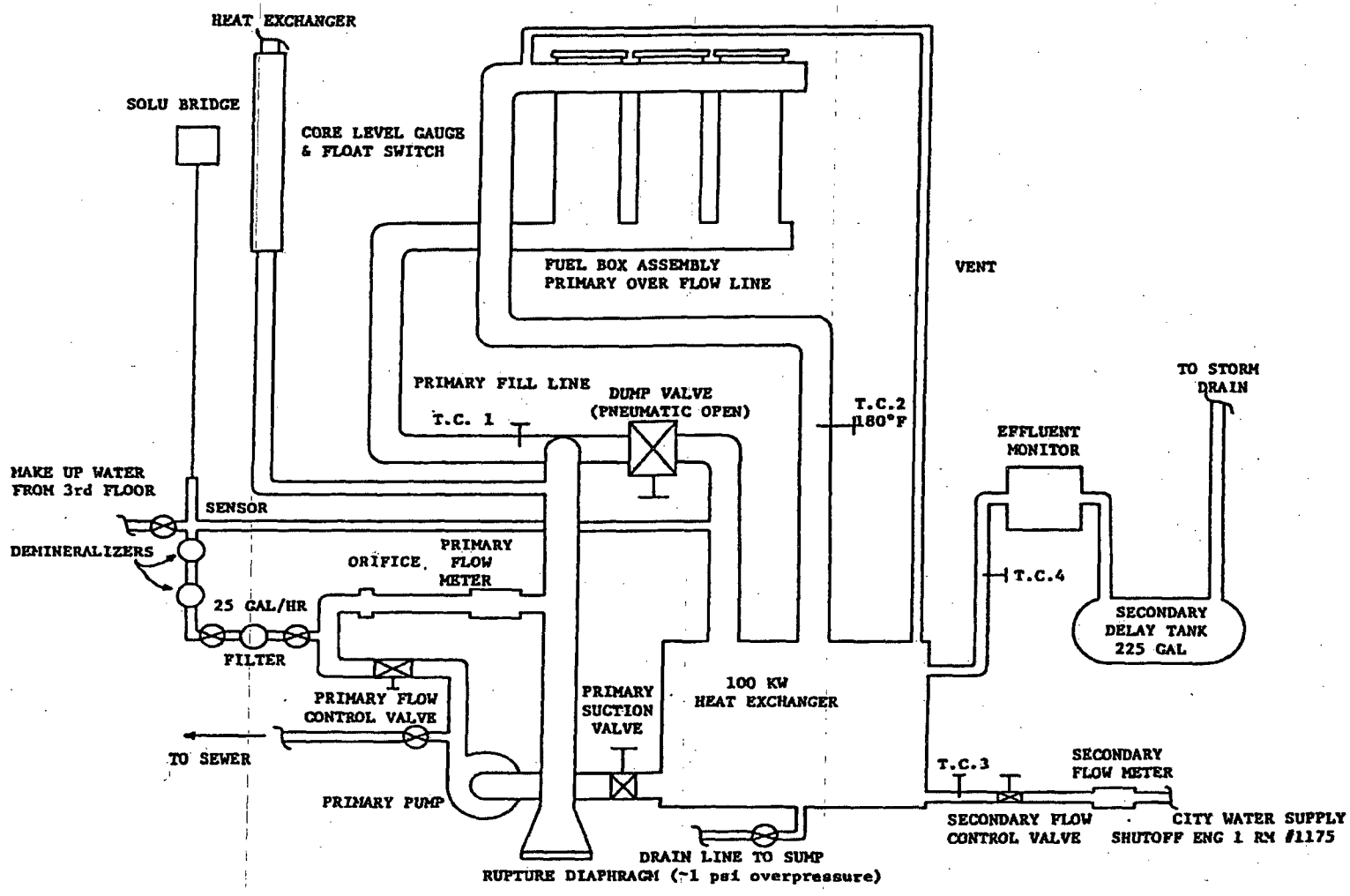

Figure 1-3 UCLA R-1 Reactor Cooling Systems

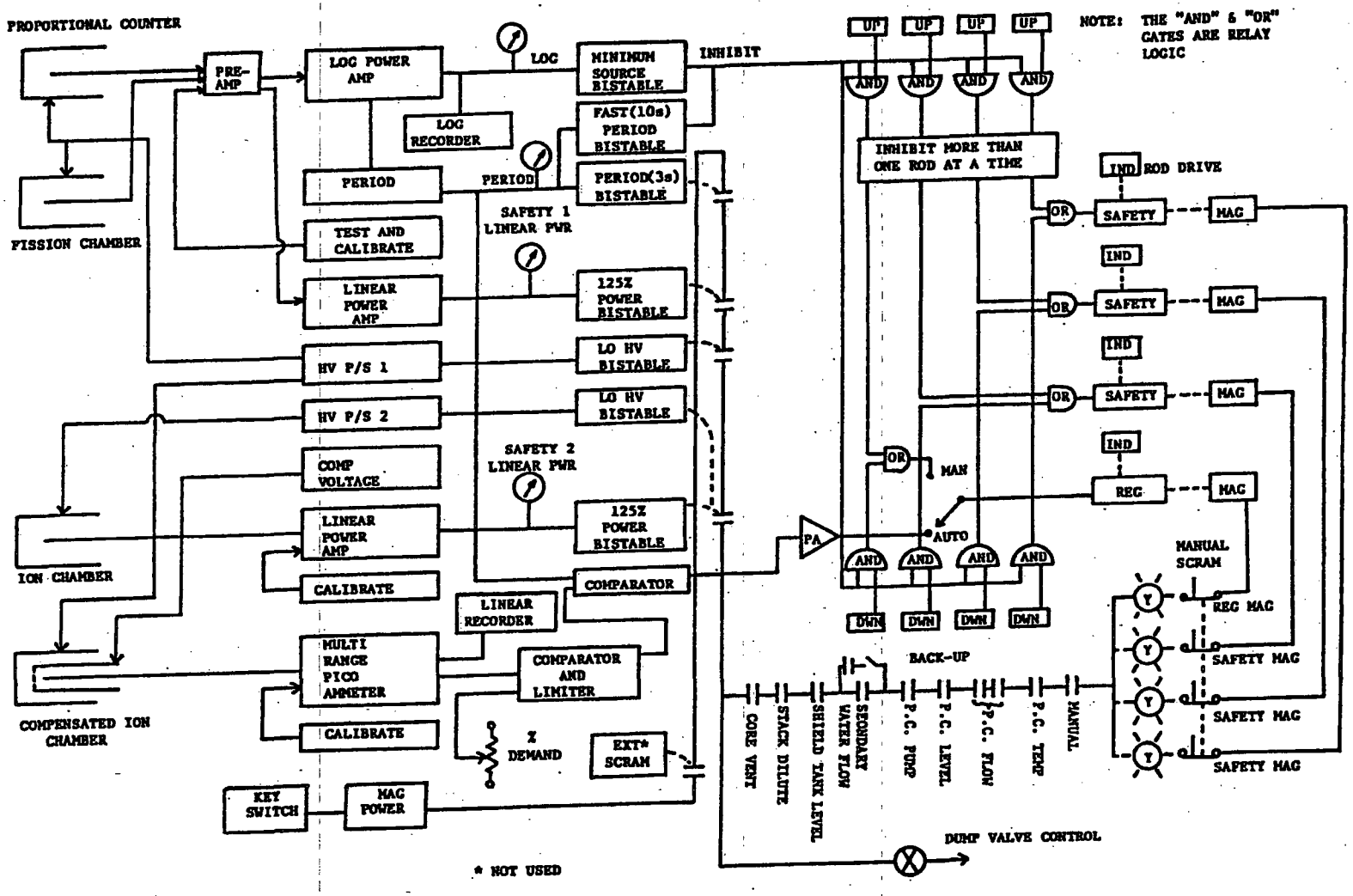

Figure 1-4 UFTR Instrumentation and Scram Logic Diagram

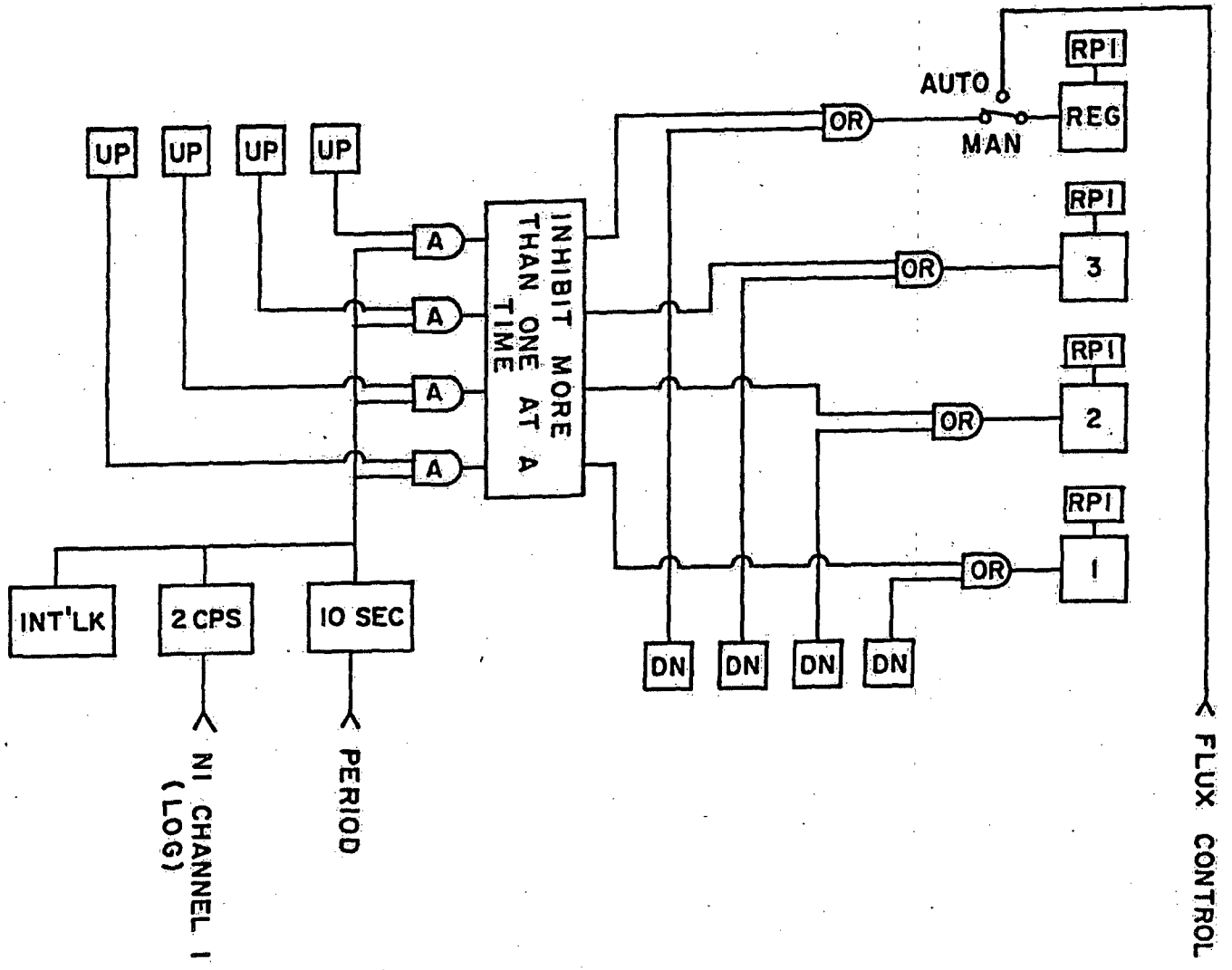

Figure 1-5 UFTR Control Blade Withdrawal Inhibit System

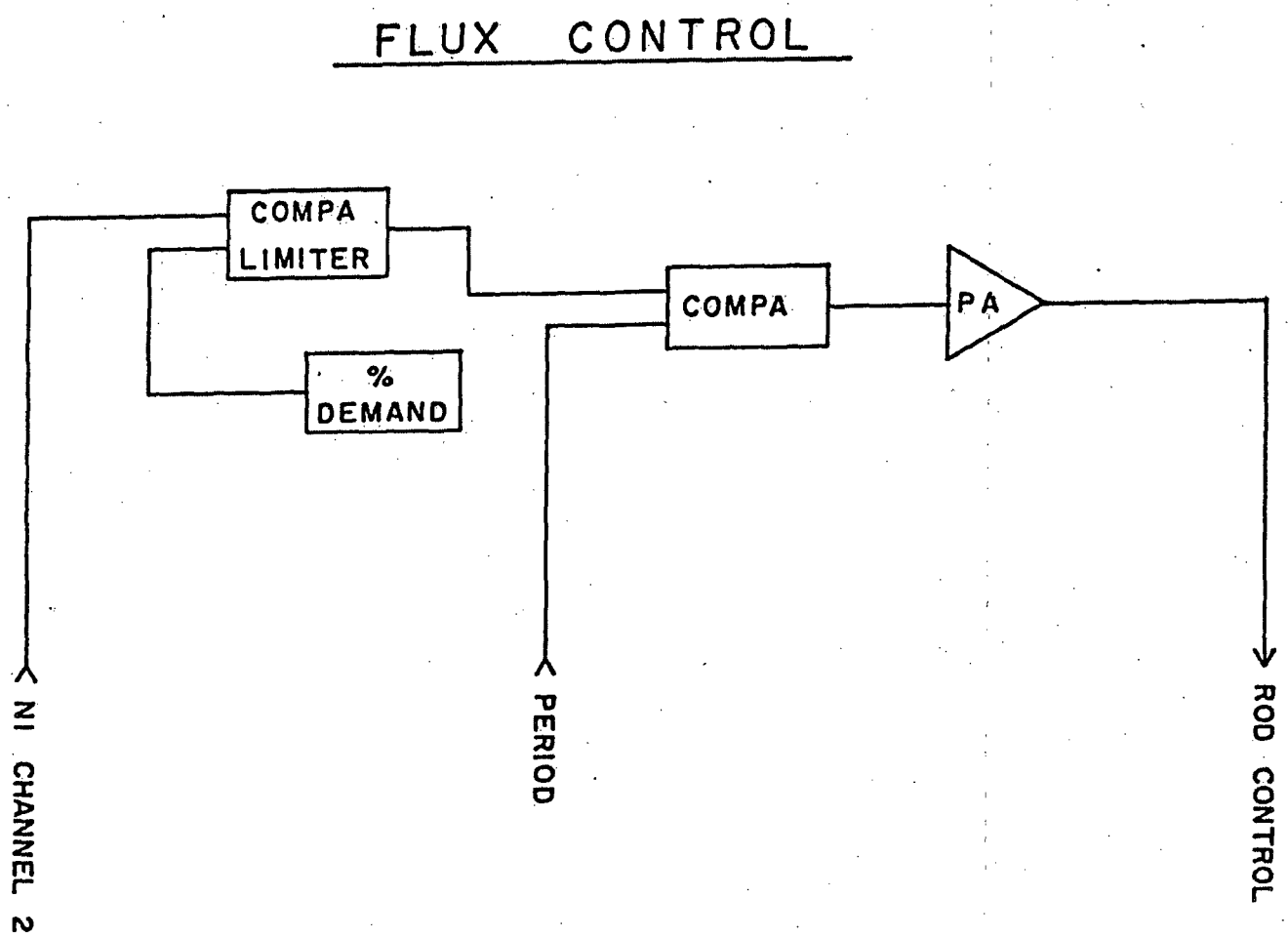

Figure 1-6 Schematic for UFTR Neutron Automatic Flux Control System

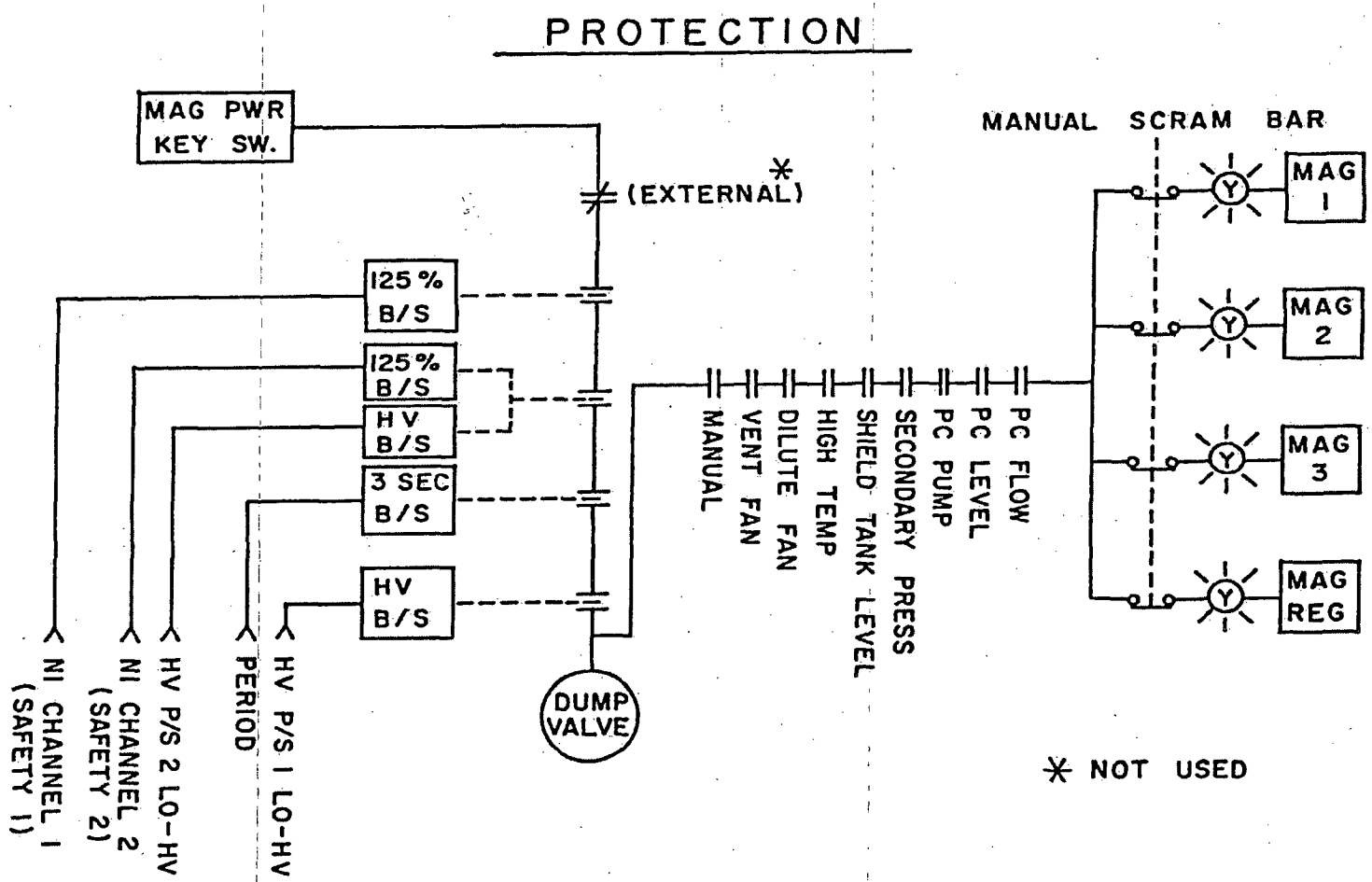

Figure 1-7 Schematic Diagram of the UFTR Reactor Protection System

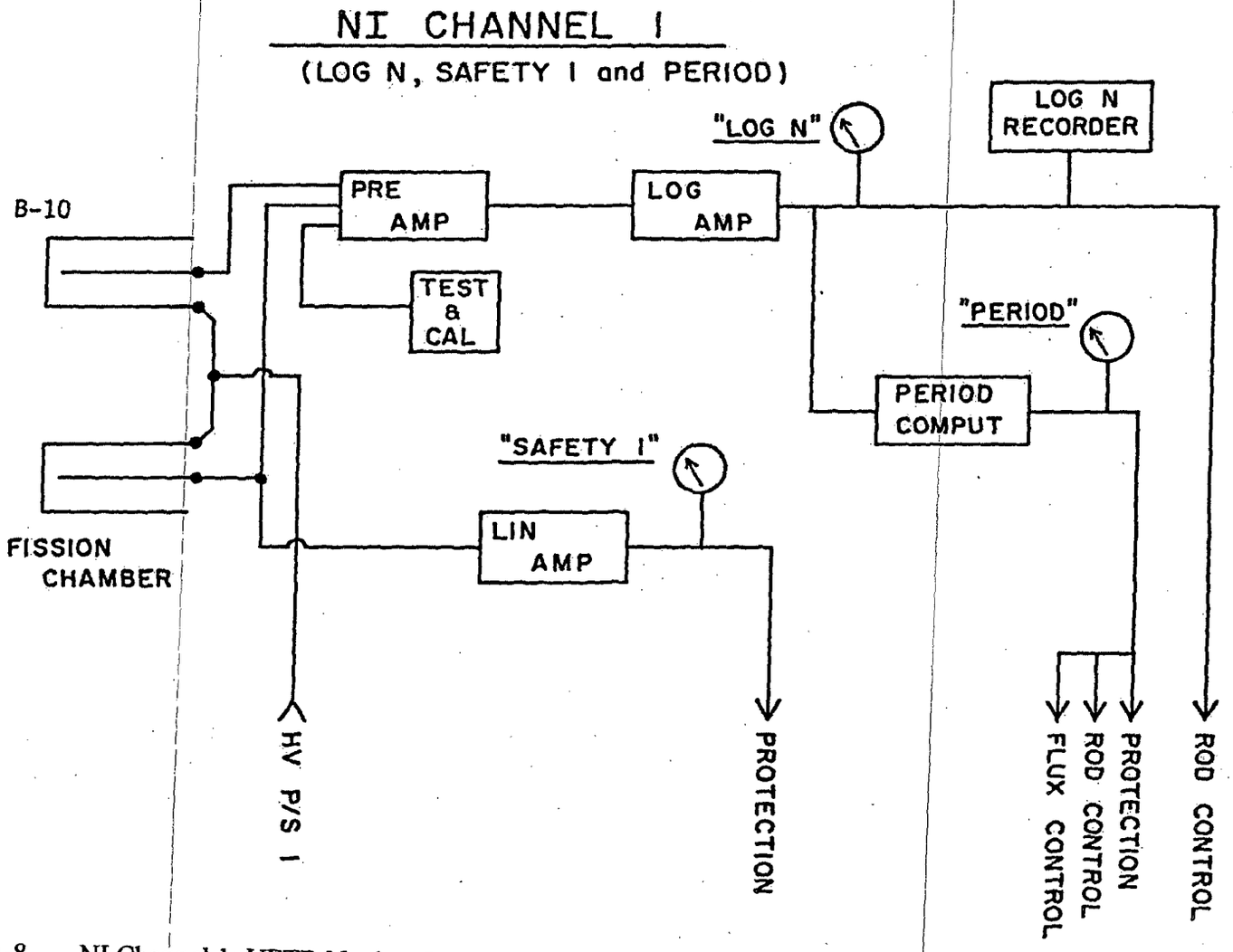

Figure 1-8 NI Channel 1: UFTR Nuclear Instrumentation Channel 1 Diagram (Log N, Safety #1 and Period Channels)

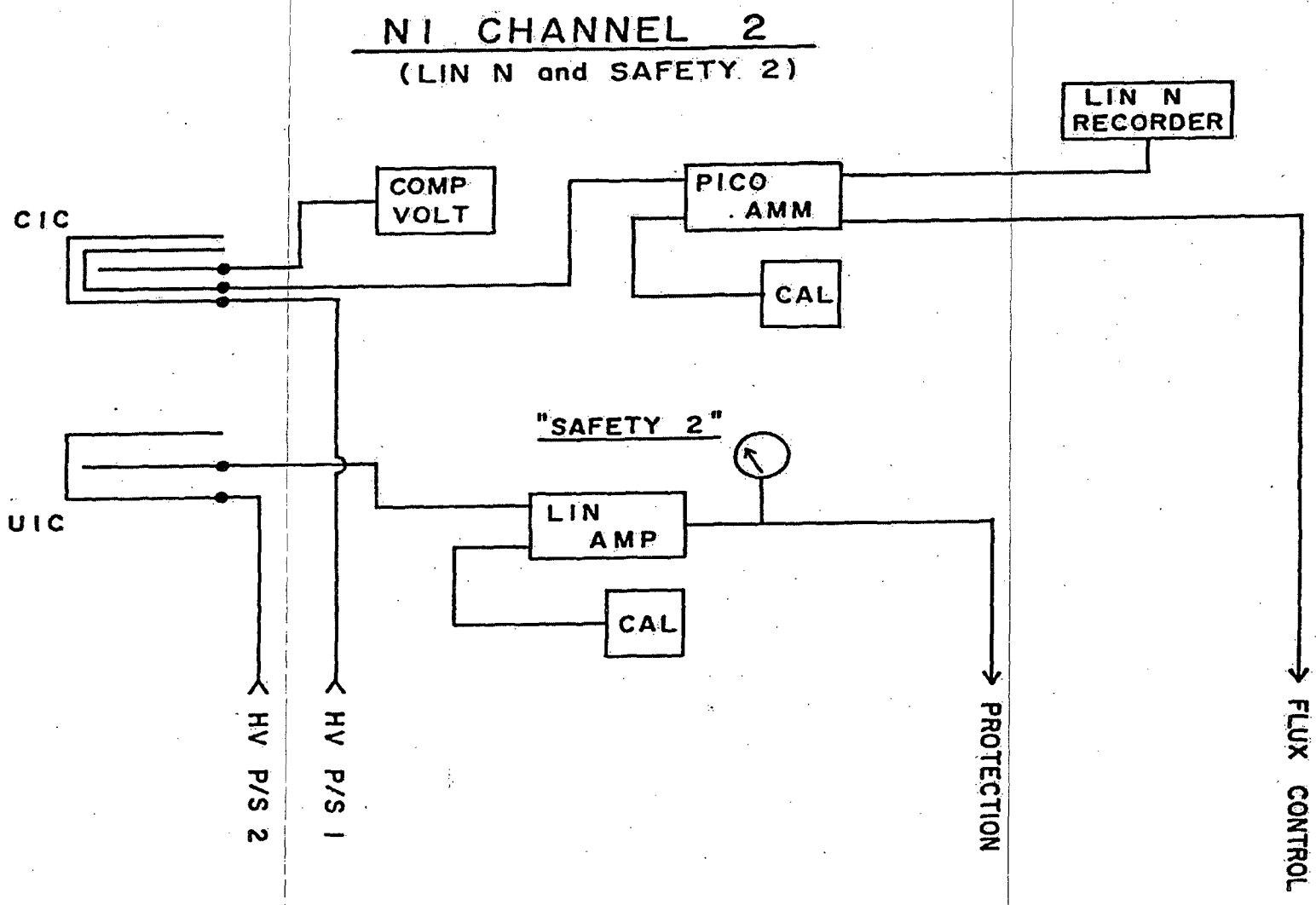

Figure 1-9 NI Channel 2: UFTR Nuclear Instrumentation Channel 2 Diagram (Linear N, Safety #2 Channels)

References:

1. *U.S. Atomic Energy Commission, "University of Florida Facility License as Amended"- License No. R-56*
2. *Nuclear and Radiological Engineering Department, "Standard Operating Procedures of the University of Florida Training Reactor". 2000, University of Florida: Gainesville, Fl.*
3. *US Census Bureau, Census 2000, Redistricting Law (Public Law 94-171) Summary File. 2000, U.S. Department of Commerce*
4. *Duncan, J.M., University of Florida Training Reactor Hazards Summary Report. 1958, Florida Engineering and Industrial Experiment Station, Bulletin Series #99*
5. *IAEA, RRDB Research Reactor Data Base. 2001,*
6. *Diagram taken from a set of papers supplied by the Nuclear Energy Laboratory UCLA R-1 Reactor Staff describing the UCLA-R1 Reactor Facility and dated April, 1978.*
7. *J.A. Zuloaga, J., "Operational Characteristics of the Modified UFTR", in Department of Nuclear and Radiological Engineering. 1975, University of Florida: Gainesville, Fl.*
8. *"UCLA R-1 Reactor Characteristics", A Table supplied by the UCLA R-1 reactor staff and dated April, 1978.*
9. *Howard, G.E., "Shielding and Thermal Redesign of the UCLA 100kWth Engineering Nuclear Reactor for 500 kWth Operation". 1968, University of California at Los Angeles: Los Angeles.*

CHAPTER 2

SITE CHARACTERISTICS

TABLE OF CONTENTS

INDEX OF TABLES

INDEX OF FIGURES

2 SITE CHARACTERISTICS

2.1 Geography and Demography

2.1.1 Site Location and Description

2.1.1.1 Specification and Location

The UFTR is located on the campus of the University of Florida, in Alachua County. Figure 2-1 shows the geographic location of Alachua County with Gainesville at its center in the North Central portion of the Florida peninsula. Figure 2-2 shows the location of the University of Florida campus within the city of Gainesville. The city of Gainesville is approximately in the center of the Alachua County, which covers 975 square miles in the north-central part of Florida, approximately midway between the Atlantic Ocean and the Gulf of Mexico. Gainesville is in the Central Highlands of the Florida peninsula. The nearest approach of the Gulf of Mexico is about 50 miles to the southwest, and the Atlantic Ocean is about 65 miles to east. As shown in Figure 2-2, the University of Florida campus is in the southwestern quadrant of the greater Gainesville area which has a population of about 217,955 [1]. The city proper has a population of about 95,447 [1]. The UF campus is approximately one mile from the center of the city (University Avenue and Main Street).

The Nuclear Sciences Center is annexed to the reactor building which is labeled Building 557 in Figure 2-3. Concentric circles are shown with the UFTR at center, the first circle having a 500 ft radius and the rest being at 500 ft. increments from the central reactor building point. The site is 100 ft. south of Reed Laboratory (No. 131); the closest residence hall is East Hall (No. 592) which is approximately 600 ft. due west of the reactor building. The reactor is located about 400 ft. north of the J.W.Reitz Union (No. 686), about 50 ft. west of the Journalism Building – Weimer Hall (No. 30) and about 250 ft. due east of the Materials Building – Rhines Hall (No. 184) and about 100 ft. due east of the Air Conditioner Chiller Unit (No. 48). The J.Hillis Miller Heath Center (No. 445) complex is about 2,600 ft. southeast of the UFTR. Similarly, most of the residence halls, fraternity houses, and Lake Alice, a small lake within the University of Florida boundaries, are found within the same range.

2.1.1.2 Boundary and Zone Area Maps

The site map indicated in Figure 2-2 shows the property boundaries of the University of Florida campus. The site boundary lines are the same as the property lines. The locations of the principal structures on the University of Florida campus including the reactor building are shown in Figure 2-4.

The exclusion area for this reactor facility (as defined in 10 CFR Part 100) is the reactor building itself since this is a low power training and research reactor.

2.1.1.3 Boundaries for Establishing Effluent Release Limits

Under the regulations of 10 CFR 100, a restricted area is defined for the purpose of establishing access control to protect individuals from exposure to radiation and radioactive materials. For the UFTR, the reactor cell itself constitutes the boundary lines of the restricted area. For this facility, a further "protective" zone is defined. This protective zone is established in the lobby of the reactor cell by locked doors under the operator's control. A locked door at the top of the stairs prevents unauthorized entrance from the laboratory and office facilities upstairs while a locked door downstairs prevents unauthorized entrance to the reactor cell lobby from the rest of the reactor building such as the radiochemistry laboratory, neutron activation laboratory and hallway downstairs.

For the UFTR, the reactor building itself constitutes the boundary lines of an exclusion area, usually thought of as a restricted area, in that personnel can be excluded from this building rapidly during an emergency situation and everyone in the reactor building is under the control of the UFTR staff.

[

] Access to the exclusion area including the restricted area and the protective zone will be controlled according to the facility Security Plan. Only authorized personnel will be allowed to enter the reactor cell without the knowledge and permission of approved operation staff members.

During non-use periods, the reactor cell will be kept locked. The construction of the reactor building as a "vault-type room" as defined in 10 CFR 73.2 (o) means all doors are capable of being locked and the entire facility safeguarded from unauthorized access.

2.1.2 Exclusion Area Authority and Control

2.1.2.1 Authority

The University of Florida is located within the city of Gainesville, within Alachua County, approximately one mile from the center of the city (University Avenue and Main Street). The University of Florida was created by an Act of the Florida Legislature in 1905, and has a spring 2000 semester enrollment of about 42,035 and a fall 2000 semester enrollment of about 46,107. The maximum enrollment occurs in the fall semester. Direct supervision over the University of Florida, its polices and affairs, is vested in the Board of Trustees. The Board of Trustees is a body composed of twelve citizens from different regions of the state who are appointed for four-year terms by the Governor of Florida. All University affairs are administered by the President with the advice and assistance of the Vice President for Administrative Affairs. This Vice President has the authority to determine all activities, including exclusion and removal of personnel and property from the area.

All land within the boundary lines of the campus and the exclusion area of the reactor building, as described in Section 2.1.1.2, is owned by UF act and controlled by the Vice President for Administrative Affairs of the University of Florida. The President and/or the Vice President for Administrative Affairs of the University of Florida have the authority to determine all activities, including exclusion and removal of personnel and property from any part of the campus including the exclusive mineral rights for the entire campus area.

2.1.2.2 Control of Activities Unrelated to Plant Operation

Since the exclusion area is identified with the reactor cell, no activities unrelated to reactor operation or other nuclear related activities will be permitted within the cell.

2.1.2.3 Arrangements for Traffic Control

Since the campus is not traversed by any major highway, traffic control arrangements will be limited to campus routes only. All ingress and egress roads to the campus (Figure 2-4) will be controlled by campus officials. In the event of difficulties arising from or developed by the reactor, the radiation warning system will sound the evacuation siren for the reactor building. The staff, faculty and students in the building are advised to evacuate the building upon hearing the siren. It is estimated that all uninjured persons can be evacuated from the reactor building in less than two (2) minutes. Evacuation routes lead directly away from the reactor building toward the nearest roads. Evacuation drills for facility personnel shall be conducted quarterly, at intervals not to exceed four months, to assure that facility personnel are familiar with the emergency plan.

2.1.2.4 Abandonment or Relocation of Roads

Since the reactor cell, which encompasses the reactor room and the control room, is defined as the exclusion area, there is no need to consider abandonment or relocation of public roads traversing the exclusion area.

2.1.3 Population Distribution

Population data is based on 2000 census data [1].

2.1.3.1 Population within 10 miles

The only significant large permanent population grouping within 10 miles from the reactor site is represented by the city of Gainesville itself (see Figure 2-8). The total population is about 95,447 and as shown in Figure 2-5 most of the population is to the north and east of the reactor site [1].

Figure 2-6 illustrates the population density per square mile of the various entities in the State of Florida. As noted, Alachua County has a population density in the range of 128 to 266 persons per square mile (223 persons per square mile). Figure 2-7A illustrates the percentage population change for the years 1960 through 2000 where Alachua County is found in the category of 134% to 267% (194%) [1]. Figure 2-7B illustrates the projected population for 2020 with Alachua County falling in the 121,901 – 379,600 range. [2]

2.1.3.2 Population between 10 and 50 Miles

The major population centers between 10-50 miles from the reactor site are illustrated in Figure 2-8 where one can find sparsely populated areas with small population concentrations in the cities of Alachua (6098), High Springs (3863), Newberry (3316), Archer (1289) and Hawthorne (1415) within 10 – 20 mile range from the reactor site. Further detailed population information for this research reactor is not considered necessary due to the low power operation, low radioactivity inventory and low potential for accidents as compared to a typical power plant.

2.1.3.3 Transient Population

Population variations related to the City of Gainesville are due mainly to the presence of the University of Florida and Santa Fe Community College, both having a great impact on the population composition of the greater Gainesville area.

The University of Florida population is mostly transient in its occupation of the campus buildings denoted in Figure 2-4. Most of the approximately 58,800 students, student's families, faculty and staff populate the campus in varying numbers primarily Monday through Friday during the hours from 7:30 a.m. to about 10:00 p.m. As noted previously, this number is a maximum in the fall and diminishes significantly due to reduced enrollment as the academic year progresses especially during the summer sessions when less than half the normal maximum student population is on campus. About 6,930 persons occupy the campus dormitories while another 2,450 occupy the family and single graduate housing areas on the periphery of the campus and 1,570 occupy the fraternity housing. The rest including about 11,600 faculty and staff make up the transient campus population.

The Santa Fe Community College population is completely transient. The fall, 2000 semester enrollment was 12,726. Because of its location about 6 miles northwest of the UF campus, no further consideration is given to the Santa Fe Community College transient population concentration.

2.1.3.4 Low Population Zone

The low population zone, as defined by 10 CFR Part 100.3(b), includes the University of Florida campus which constitutes a radial distance of approximately 3500 feet from the

reactor site. The only significant permanent population concentrations in the low population zone are the dormitory facilities located on the University campus (see Figure 2-4). The closest residence hall is East Hall (#592), shown in Figure 2-3 which is approximately 700 ft. due west of the reactor building. East Hall is part of the series of adjacent buildings referenced as the Tolbert area housing approximately 960 students. The reactor is located about 400 ft. north of the Reitz Union, 50 ft. west of the Journalism Building (Weimer Hall) and 250 ft. due east of the Material Building (Rhines Hall). The J.Hillis Miller Health Science Center is found approximately 2,600 ft. southeast of the UFTR. Most of the fraternity houses and other residence area are found within 2,800 to 4,000 ft. from the UFTR facility. The number of students housed within campus residence areas is approximately 9,800 and the number of spouses and children in the graduate housing area is approximately 1,150 for the fall 2000 semester.

The transient population concentration within the low population zone is due to the staff, faculty and students who do not reside on campus. As mentioned in Section 2.1.3.3, this number is approximately 47,900.

This low population zone has been selected on the basis of its small easily evacuated, residential population. All of the people within the zone can be notified and evacuated in the event that a significant release of radioactive material occurs at the reactor site.

The dose received by an individual located on the outer boundary of this low population zone for the duration of the postulated fission product release is expected to be well below the preset limits of 25 rem whole body and 300 rem thyroid exposure as specified in 10 CFR 100.11 (a)(2).

2.1.3.5 Population Center

The nearest population center as defined by 10 CFR 100.3 (a) is the city of Gainesville. It should be noted that the boundary of the densely populated portion of Gainesville is located within approximately 5 miles north and south west of the UFTR campus as shown in Figure 2-9. This distance will exceed the one and one-third times the distance to the outer boundary of the low population zones per 10 CFR 100.11 (a) (3).

2.1.3.6 Population Density around the UFTR Site

Since the UFTR is a small, self-protected reactor presently licensed to operate at 100 kW (thermal), the usual detailed information on population density out to 30-mile distance from the reactor is not considered to be necessary. Except for the cities of Gainesville, High Springs, Alachua, Newberry, and Hawthorne, the rest of Alachua County is found to have a relatively low population density well under the 128-266 persons per square mile average population density (see Figure 2-6). Figure 2-8 shows the population of the various towns around the reactor site, broken down into 5-mile concentric circles.

As indicated in Section 2.1.3, the specific population around the UFTR used for dose assessment calculations was obtained from the U.S. Census Bureau, Census 2000 Redistricting Data (Public Law 94-171) Summary File, Matrices PL1 and PL2, which consists essentially of population data based per tract [1]. This population information is used as the basis for the calculations supporting this SAR. The urban area of Gainesville extends further than 5 miles from the UFTR, but the population is conservatively assumed to be concentrated within a 5 mile radius around the UFTR. Table 2-1 and Figure 2-5 show the population distribution for each sector of the compass for circles with radii 1 and 5 miles. Population growth for the city of Gainesville has resulted from two main factors: annexation of residents from unincorporated areas and growth at and around the University of Florida [3]. The 1 and 5 mile radius circles are reported as the basis for establishing the so called urban boundary addressed in Chapter 13 of this SAR analyzing hypothetical radiation doses following the design basis accident.

2.2 Nearby Industrial, Transportation and Military Facilities

A study of area activities has shown there are no significant industrial activities in the immediate area that could lead to potential accidents having an effect on the UFTR Reactor Building and environs.

2.2.1 Location and Routes

Gainesville is primarily an education-related, small-business-oriented city. Large-scale industries are not present to any significant extent; the areas surrounding the UFTR site and University of Florida campus are representative of most of Gainesville, consisting primarily of residential areas, apartment complexes and small businesses such as restaurants, retail stores, etc. A study of area activities shows that there are no significant industrial activities in this immediate area that could lead to potential accidents having an effect on the UFTR Reactor Building.

Transportation routes located close to campus include State Road 26 known as University Avenue which is located approximately 1600 ft. north of the reactor site, U.S. Highway 441 known as 13th Street located about 2800 ft east of the reactor site, State Road 121 located about 7800 ft west of the reactor site and State Road 24 located about 3400 ft south of the reactor site. The locations of all of the above are shown in Figure 2-10. Interstate 75 is located about 3 ½ miles south west of the reactor site at its closest approach.

State Roads 121, 26 and 24, U.S. Highway 441 and Interstate 75 are well-traveled, major transportation routes through and/or around Gainesville. The primary usage of State Roads 121, 26 and 24, U.S. Highway 441 are for commuter travel to the University of Florida and to the center of the city. Interstate 75 is used primarily for commuter travel to/from surrounding cities and for tourist travel to South and Central Florida. Other uses for all of the above roads include shipment of dangerous, toxic or explosive substances; however

such usage would be minimal particularly for those roads nearest the UFTR site, i.e., State Roads 26, 121,and 24 and U.S. Highway 441.

Since the reactor building is located between the Nuclear Sciences Center on the south side and the Reed laboratory building on the north, any explosion of transported materials would first have to exert its effect on both of these buildings. Although not immediately adjacent, the same protection is afforded on the east side by the Journalism Building and on the west side by the unoccupied Chiller Unit Facility. The location of the UFTR building in relationship to all nearly buildings and the campus in general provides for shielding and a protective effect from the forces of explosion on all sides.

2.2.2 Air Traffic

The Gainesville Regional Airport is the only airport in the vicinity. The airport is located on the northeast edge of Gainesville, four (4) miles northeast of the center of the city and approximately five (5) miles northeast of the University of Florida. Primary access from the city center is via four lane routes, East University Avenue and Waldo Road (State Road 24), as seen in Figure 2-10. The former Army Corps Base, which is now Gainesville Regional Airport, was deeded to the city of Gainesville, the present owner, in 1948.

The Gainesville Regional Airport has a total of 10,650 ft. of runway (compass headings 240° - 280°), as seen in Figure 2-11. The airport provides both carrier and general aviation facilities for the Gainesville area. Air carrier service is provided by Atlantic Southeast Airlines (Delta Connection), Discover Air an independent scheduled charter service and Piedmont Airlines (US Airways Express). Delta Connection and US Airways provide scheduled interstate air carrier to Gainesville. In Table 2-2, the Annual Air Traffic Volume Report for the years of 1960, 1975, 1996 and 2000 shows the number of operations during those years.

Accidents and incidents recorded for the period of January 1983 through December 2000 are presented in Table 2-3[4]. During the 17 years from 1983 through 2000, there were a total of 25 incidents and 19 accidents, which is an annual average of 1.5 incidents per year and 1.11 accidents per year. An examination of this accident information indicates that there is a very small probability of an aircraft accident such as crash, affecting the reactor building of the UFTR facility which represents such a small fraction of the possible crash area around the airport and is about five miles from the airport. As indicated in Table 2-3 most of these occurrences are minor in nature with negligible likelihood of affecting the reactor site.

2.2.3 Analysis of Potential Accidents at Facilities

2.2.3.1 Determination of Design Basis Accidents

The effects of potential accidents in the vicinity of the reactor site from present and projected industrial installations and operations are concluded to be insignificant when

compared to the accident potential presented by tornadoes in the North-Central Florida region. This same conclusion applies for effects from potential transportation accidents which are also concluded to have minor effects.

Based on the low probability of aircraft accidents, the relatively small areas of aircraft impact, the protected location of the UFTR building in reference to other surrounding buildings, and the size of most aircraft involved, it is concluded that the probability for tornadoes affecting the UFTR site as well as their potential impact, is much greater than the probability of an aircraft crash affecting the site (see tornado data in Section 2.3.1.2.2). Therefore, potential tornado damage is considered the most probable and most severe externally-initiated accident possibility. All other effects from potential external accidents in the vicinity of the site due to industrial or transportation operations are considered negligible compared to the potential effects of tornadoes.

2.2.3.2 Effects of Design Basis Events

As the external design basis accident, tornadoes will have no effect on the safety – related components of the UFTR. Since the reactor building is designed as a vaulted structure (see Chapter 3), tornadoes are not expected to affect the UFTR training reactor itself.

2.3 Meteorology

2.3.1 Regional Climatology

2.3.1.1 General Climate

The following information is based on local climatological summaries for the Gainesville area prepared by the U.S.Weather Bureau [5]. Gainesville lies in the north central part of the Florida peninsula, almost midway between the coasts of the Atlantic Ocean and the Gulf of Mexico. The terrain is fairly level with several nearby lakes to the east and south. Due to its centralized location, maritime influences are somewhat less than they would be along coastlines at the same latitude. Maximum temperatures in summer average slightly more than 90 degrees. From June to September, the number of days when maximum temperatures exceed 89 degrees is 84 on average. Record high temperatures are in excess of 100 degrees. Minimum temperatures in winter average a little more than 44 degrees. The average number of days per year when temperatures are freezing or below is 18. Record lows occur in the teens. Low temperatures are a consequence of cold winds from the north or nighttime radiational cooling of the ground in contact with rather calm air. Rainfall is appreciable in every month but is most abundant from showers and thunderstorms in summer. The average number of thunderstorm hours yearly is approximately 160. In winter, large-scale cyclone and frontal activity is responsible for some of the precipitation. Monthly average values range from about 2 inches in November to about 8 inches in August. Snowfall is practically unknown. It is not expected that any of these weather extremes would affect the safe operation of the UFTR facilities.

As stated in reference [5], because of its inland location, Gainesville does not have serious problems with hurricanes. An occasional hurricane will cross the Gulf or the Atlantic coast and head toward Gainesville, but before it arrives it is weakened by surface friction and a depletion of water vapor.

2.3.1.2 Regional Meteorological Conditions for Design and Operating Bases

2.3.1.2.1 Tropical Storms and Hurricanes

As stated in reference [6], from 1891 when more complete weather recordkeeping was started, through 1972, a total of 58 tropical storms or hurricane centers have passed within approximately 75 miles of the University of Florida site, only one additional hurricane has come near the UFTR site along the east coast of Florida but much more than 75 miles away at its nearest center. After 1885, weather records differentiated between tropical storms (winds less than 73 mph) and hurricanes (winds more than 73 mph). From 1891 through 1996, there have been 79 passages of tropical storms and 74 hurricanes through Florida [7]. Of these a maximum of 14 hurricanes were experienced within 100 miles from the site. The most destructive was probably the hurricane of October 19, 1944. However, relatively few storms have moved inland on Florida's west coast between Cedar Key (directly west from Gainesville) and Fort Myers in the past 100 years. Most tropical storms have a tendency to move on one of the three general courses, which prevents them from having a maximum impact on the UFTR area as they move northward. As shown in Figure 2-12, the typical tropical storm or hurricane takes one of three routes: either it (1) recurves north and northeast along the Florida east coast, (2) moves northward paralleling the west coast, or (3) moves on a north-westerly course across the Gulf of Mexico. The map of hurricanes presented in Figure 2-12 indicates that the panhandle and the southern portion of the peninsula have been most affected [8]. Figure 2-13, the graph of the years in which Florida was hit reveals that in three different years, four hurricanes struck the state. More than 30 of the 88 strikes occurred during September, with slightly more than 20 during October. Figure 2-14 presents the probability of hurricane force winds occurring within a county during a hurricane strike, based on data taken from hurricane that made landfall in Florida from 1900 to 1996 [9]. Counties with short return periods have a high probability of hurricane strikes.

Experience with the passage of past hurricanes indicates maximum gusts of approximately 60 miles per hour around the site. It should be noted that even thunderstorms with accompanying hail, excessive rain, and strong winds, occasionally develop gusts of this or higher severity.

Based on the data provided above, tropical storms and hurricanes are not considered a great hazard at the University of Florida reactor site for three reasons. First, the likelihood of a hurricane traversing Alachua County is very small. Second, the severity of the storm is reduced by the overland movement necessary for a storm from the Gulf of Mexico or the

Atlantic Ocean to reach the Gainesville area. Third, tidal flooding is prevented by the inland location of the UFTR site and there are no significant bodies of water near the UFTR site.

2.3.1.2.2 Tornadoes

From the 2,365 tornadoes reported in Florida from 1950 through 2000, 33 were reported in Alachua County [10], of which only 18 caused property damage, personal injuries or death. From this total 8 tornadoes were of magnitude F2 (Fujita Scale), with winds from 113 to 157 mph, resulting in a total of 14 persons injured, no deaths and a total property damage estimated in US$ 6,028,000.00 (reference 2001 US$). A total of 12 tornadoes were of magnitude F1 (wind speeds from 73 to 112 mph) resulting in a total of one death, 4 persons injured and property damage estimated in US$ 5,358,000.00 (reference 2001 US$). The rest, a total of 13 tornadoes were of magnitude F0, with winds from 40 to 72 mph, resulting in one person injured and property damage estimated in US$ 281,000.00 (reference 2001 US$).

Figure 2-15 presents tornado frequency data in Florida Counties for the typical period of 1950 to 1995[11]. It should be noted in the period of 1995 to 2000 no tornadoes stroked Alachua County with the exception of several funnel clouds and waterspouts. Figure 2-15 indicates that June is the month in which the highest numbers of tornadoes have occurred in the State of Florida.

According to statistical methods provided by Thom [12], the probability per year of a tornado striking a point within a given area may be estimated using Equation 2-1 as follows:

$$P = \frac{ZT}{A} \qquad \textbf{Equation 2-1}$$

where symbols are defined as follows:

P = the mean probability per year of a tornado striking a point within area A.
Z = the geometric mean tornado path area, square miles.
T = the mean number of tornadoes per year in the area.
A = the area of concern, square miles.

The value of T (mean number of tornadoes per year) is taken as 1.0 per year for the 50 year period (1950 – 2000) for Alachua County in which the UFTR site is located. Based on data reported by Thom [12] for midwest tornadoes, an average tornado path area is about 2.82 square miles which is the applicable but conservative value used for Z. The surface area of Alachua County is approximately 965 square miles which is the value used for A.

Weather bureau records [13] indicate that the average path of the few tornadoes in Florida that actually reach the ground is about 125 yards wide and 4 miles long, (0.284 square miles) as compared to a nationwide average path area measuring 400 yards in width

and 16 miles in length. In other words, Florida tornadoes typically affect about 7.8% of the area that is affected by a tornado on the national average.

Using the value of A equivalent to the total land area of Alachua County (965 square miles) in which the UFTR site is located, a value of $P = 1.9 \times 10^{-3}$ /year is calculated as the mean probability per year of a tornado striking within the UFTR site. This probability of such a tornado striking within the UFTR site (reactor building occupies less than an acre) is very conservative because the mean tornado path area in Florida is so much less than the national average used in the calculation. In addition other campus nearly structures surrounding the reactor building provide significant further protection.

The mean recurrence interval, R=1/P, of a tornado striking a point anywhere in the 0.024 degree square in which the site is located is, therefore, about 526 years. However, in the period from 1950 to 2000, only 13 property-damaging tornadoes have been reported in Alachua County, Florida where the site is located (also equivalent to a smaller probability of $P= 7.6 \times 10^{-4}$ /year which further emphasizes the conservatism of the $P = 1.9 \times 10^{-3}$ /year value calculated above). If taken together, the two conservative assumptions involving mean tornado frequency for damage represent more than an order of magnitude conservatism in the mean probability per year of a tornado strike. Since the probability value P is greater than 10^{-7}, tornadoes are considered to be the most likely natural disaster to affect UFTR site. Nevertheless, this probability is conservative and yet very low.

2.3.2 Local Meteorology

2.3.2.1 Normal and Extreme Values of Meteorological Parameters

As quoted from reference [6], there are two major sets of meteorologically influential features which interact to determine the climate patterns of Alachua County and the UFTR site. The first set of influential features includes the critical surface features of the county as well as its location relative to other significant, climate-influencing geographical properties of the surrounding region. The critical surface features are depicted in Figure 2-16 which shows the generalized topographical map of the State of Florida, and in Figure 2-17 which shows the generalized topographical map of Alachua County. The second set of influential features consists of predominant patterns of zonal atmosphere behavior.

The features which are included in the first set include:

1) latitude,
2) proximity to Gulf of Mexico and Atlantic Ocean,
3) presence of inland lakes,
4) strength of surface which depends upon a variety of surface properties, and,
5) the rate of nocturnal cooling.

The features which are included in the second set include:

1) sea breeze convergence,
2) frequency of frontal passage,
3) frequency and strength of hurricanes,

4) frequency and duration of anti-cyclonic subsidies condition,
5) frequency and intensity of occurrence of tradewind inversion, and
6) the position and strength of the North Atlantic subtropical high.

The behavior of this last feature of atmospheric circulation controls the local behavior of most of the remainder of the state.

The average year in Alachua County may be divided into two seasons: the warm, rainy season and a cooler, dry season. The warm, rainy season runs from about the middle of May to the end of September. The cooler, dry season dominates the remainder of the year. Most of the rain (about 60%) falls during the hot summer, frequently occurring as afternoon thunderstorms generated by strong surface heating and fed by double sea breeze convergence. When high cloud cover inhibits convective development in the afternoon, permitting only formation of small, cumulous clouds, rain may occur at night as a result of instability generated by nocturnal radiative cooling from the top of the small clouds. Precipitation during the summer has a very patchy horizontal distribution for any particular day.

Frontal passage during winter months is the most severe variable rain producing mechanism for the county. Frontal or low occurrences within Florida averaged 38 for winter, 29 for spring, 19 for summer, and 41 for fall, for years 1965 through 1967. During the winter months, the differential, seasonal cooling of land and sea, the occasional presence of strengthening high pressure cells, and the formation of low level inversions by the high rate of nocturnal cooling act to maintain a high degree of atmospheric stability. A high percentage occurrence of the tradewinds inversion during these winter months (70% in February) also contributes to this stability. Under these conditions, convective activity is suppressed and the possibility for vertical mixing and ventilation is limited. Frontal passages act to disrupt this stability and generate convective activity and vertical mixing. The rain may occur at any time during the day since frontal storms are not dependent upon local land surface heating.

Following the movement of a cold front across northern Florida, the lower troposphere will be dominated by colder air with relatively warmer air (higher potential temperature) aloft. Such a configuration is stable and acts as an additional inhibitor of vertical mixing. A decrease in the frequency of frontal movement across northern Florida is one probable cause of periodic draft occurrences. A reduction of the frequency of frontal storms will reduce total annual precipitation substantially below annual values of the evaporation demand as estimated by pan evaporation. Rain accompanying frontal storms is usually less than that associated with convective activity and will tend to be more effective for the recharge of soil and surface storage. On the other hand, the intensive rainfall associated with late afternoon convective storms will tend more to recharge the limestone aquifer, particularly in the populated developed areas where water runs rapidly off to enter the aquifer through solution sinks. The so-called Floridan aquifer lies near the surface under most of Alachua County. A substantial reduction in the number of frontal passages will cause extensive surface drying with concomitant vegetation stress, lowering of lake levels and the depletion of shallow wells.

The ridge extension of the Bermuda High is exceedingly common during the summer months and ordinarily would induce very arid conditions within the Florida peninsula. Were it not for the intense surface heating and the presence of large bodies of water on either side of the peninsula, Florida would be as arid as the great sub-tropical deserts, such as the Sahara Desert at the same latitude. The ocean and the gulf provide moisture, and the differential land-sea heating provide a pressure gradient for the development of sea breeze convergence which powers intense afternoon convective storms. [6]

The climatological summary of the Gainesville station temperature data for the years of 1960 to 2000 [5] is summarized in Table 2-4A. Examination of detailed climatological data contained in the Local Climatological Data, Annual Summary with Comparative Data released by the National Climatic Data Center (NCDC) [5] shows no significant climate changes over the earlier 50 year period; although precipitation does vary greatly from month to month and year to year. Maximum temperatures in the 90's are common but records above 100°F are infrequent due to the nearness to ocean areas and winds which cause marine characteristics to prevail during the summer. Table 2-4A includes mean, maximum and minimum monthly temperatures as well as overall monthly extreme temperatures for the years of 1960 to 2000. The yearly averages are also included.

The Gainesville station precipitation data for 1960 to 2000 [5] is also summarized in Table 2-4A on a monthly basis with annual values also included. Mean, minimum and maximum values are also reported on a monthly basis.

Gainesville relative humidity data presented in Table 2-4B[5] shows that the relative humidity averages nearly 91 percent late at night. Early afternoon averages range from about 50 percent in April and May to about 65 percent in July, August and September. Heavy fogs form on 30 to 40 days per year, usually forming late at night and dissolving soon after sunrise. Most of the fog occurs during the period of November through March. Most of the meteorological records were obtained from data collected at the Gainesville Regional Airport Weather Station. Due to the lack of micrometeorological data which was considered necessary for the original licensing of the UFTR in 1959, a program was set up in 1956 to collect this micrometeorological data. Figure 2-18 presents a summary of the wind and precipitation data for the University of Florida for the period of July 1957 through June 1958. Wind data were obtained from wind vanes located on the College of Engineering radar tower at elevations of 125 feet and 30 feet above ground. The wind data are divided into five (5) velocity groups, calm-1, calm-2-4, 5-7, 8-12, and 13+ miles per hour. The radial length of direction lines represented by the wind scale indicates the number of hours for which winds of the designated velocity groups prevailed from the point indicated. Shaded areas represent the number of hours in each velocity range during which precipitation occurred. The detailed study leading to the above results is included in Appendix 2A for completeness. This is the data used to obtain the original UFTR R-56 operating license. Section 2.3.4 contains updated data and the results of diffusion calculations for the UFTR.

2.3.2.2 Potential Influence of the UFTR and Its Facilities on Local Meteorology

Based upon evaluation of the small physical size of the UFTR and small thermal output even at full power (100 kW), it is concluded that there is no potential for UFTR-caused modifications of the normal or extreme values of meteorological parameters described in Section 2.3.2.1 as a result of the presence and operation of the plant.

2.3.2.3 Local Meteorological Conditions for Design and Operating Bases

Since the UFTR is a self-protected and isolated low-power system with negligible environmental interaction, there are no local meteorological or air quality conditions used for design and operating basis considerations except for those associated with diffusion estimates following any accidental or planned release of radioactivity. Both short-and-long-term diffusion estimates are presented in Section 2.3.4. Corresponding diffusion estimates applied for the Design Basis Accident are presented in Section 2.3.5

2.3.3 Onsite Meteorological Measurements Program

Because of the self-limiting, low power operation of the UFTR, no onsite meteorological measurements program has been conducted following the initial acquisition of meteorological site data for the original UFTR license application. Limited meteorological measurement programs are conducted at the Gainesville Regional Airport which is about 5 miles northeast of the UFTR site; such data would be generally applicable for the UFTR site. It is not felt that any additional measurement programs are needed at this time.

2.3.4 Long-and-Short-Term Diffusion Estimates for the UFTR

The methodology and calculations presented in this section were performed as part of a Master's Thesis project [14] as reported in the licensing documentation submitted for the 1982 relicensing. There is no reason to change this analysis as it continues to be valid

2.3.4.1 Objective

This section contains conservative estimates of long and short-term atmospheric diffusion coefficients (□/Q) for the UFTR site. The atmospheric diffusion model employed in this study is the constant mean wind direction model; the version used is the one recommended by the U.S. Nuclear Regulatory Commission in Regulatory Guide 1.111: "Methods for Estimating Atmospheric Transport and Dispersion of Gaseous Effluents in Routine Releases from Light-Water-Cooled Reactors." [15] The computer code XOQDOQ, developed by the NRC, was used for the calculations [16].

The diffusion of radioactive effluents in the atmosphere is a function of the atmospheric conditions, the topography and the physical and chemical state of the effluents. In the model used for calculations associated with this Safety Analysis Report, the atmospheric conditions were assumed to be defined by the Pasquill stability category as a measure of the atmospheric thermal turbulence, the wind speed and wind direction.

2.3.4.2 Methodology of Calculations of Diffusion Coefficients

There are several equivalent methods to determine the atmospheric thermal turbulence as described in TID-24190:

(i) The combination of insolation and wind speed;

(ii) The standard deviations of the azimuthal and polar angles of the wind vector as a function of time as measured by a wind vane with two degrees of freedom;

(iii) The temperature gradient or the measurement of the variation of the temperature with height. This method was used for the compilation of the wind roses used in this study. In practice this variable was determined by measuring the difference in temperatures between two levels of a meteorological tower and later processing the data to obtain hourly averages. This latter procedure was also applied for computing average data for the speed.

One problem sometimes encountered in the acquisition of meteorological data is the existence of wind speeds which are below the anemometer threshold. XOQDOQ distributes these hours within the lowest speed class, with weights in accordance with the direction and stability distribution of the first wind speed class. This distribution was performed for the meteorological data from the Crystal River Nuclear Power Station.

The diffusion coefficient, defined as the atmospheric concentration at a point per unit release, is assumed to follow the pattern of a two dimensional gaussian in the vertical and horizontal directions, and the plume is assumed to be transported along the wind direction. The wind directions considered are the sixteen compass points and the concentrations are averaged within each compass sector by integrating along the horizontal direction [17]. The annual average diffusion coefficient is the magnitude of concern here. It is calculated in each sector by multiplying the frequency at which the wind blows into this sector times the hourly diffusion coefficient. The resulting equation for the atmospheric diffusion coefficient is given in Equation 2-2 [16]:

$$\chi / Q = 20.32 \sum_{i,j} f_{i,j} \left(\chi \bar{u}_i \sum_{z,j} (x) \right)^{-1} \exp\left(-\frac{h_e^2}{2\sigma_{zj}^2}(x) \right) \qquad \textbf{Equation 2-2}$$

where the following definitions apply:

i	=	wind speed class index;
j	=	stability class index (usually from 1 to 7 corresponding to Pasquill categories A to G);
$f_{i,j}$	=	annual frequency that the wind blows into a sector(total number of hours

the wind blows into a sector in a year divided by the total number of hours in a year) with speed class "i" and stability class "j";

x	=	downwind distance from the release point;
$\sigma_{zj}(x)$	=	standard vertical plume spread shown in Figure 2-19 [13];
u_i	=	wind speed corresponding to wind speed class "i";
h_e	=	effective stack height (to be defined later); and
$\Sigma_{zj}(x)$	=	effective vertical plume spread.

The effective plume spread is defined as follows:

$$\sum_{zj}(x) = \left(\sigma_{zj}^2(x) + 0.5A_T\right)^{1/2} \qquad \textbf{Equation 2-3}$$

where AT is the maximum transverse area of the building from which the release takes place (UFTR Reactor Building).

The vertical plume spread is a function of the distance and of the stability class. It increases with distance and with thermal instability. The correction factor shown in Equation 2-3 accounts for the enhancement in turbulence caused by the building wake.

The effective stack height is given by:

$$h_c = h_g + h_{pr} - c \qquad \textbf{Equation 2-4}$$

where the following definitions apply:

he	=	effective stack height;
hg	=	geometrical stack height;
hpr	=	plume rise due to momentum and buoyancy;
c	=	correction factor for downwash.

The XOQDOQ code contains two kinds of correlations for the plume rise due to momentum and buoyancy, hpr, depending upon the stability class. One correlation applies for stability in Pasquill classes 1 to 4 and the other for stability classes 5 to 7.

First, for neutral and unstable conditions ("j" = 1-4), the following correlation is used for the plume rise in XOQDOQ:

$$h_{pr} = 1.44\left(\frac{w_o}{u}\right)^{2/3}\left(\frac{x}{D}\right)^{1/3} D \qquad \textbf{Equation 2-5}$$

where:

wo = stack exit velocity (meters per second);

x = down wind distance (meters);
u = wind speed at release height (meters per second);
D = internal stack diameter (meters).

The wind speeds at the release height are calculated from the wind speeds at the height which were actually measured, using the following equation:

$$u_r = \left(\frac{h_r}{h_m}\right)^{a_{u_m}}$$ **Equation 2-6**

where:

ur = wind speed at the release height;
hr = height of actual release;
hm = height at which the wind speed was measured;
um = measured wind speed;
aum = empirical constant.

The "a" is an empirical constant whose value depends on the atmospheric class as follows:

aum = 0.24 for "um" = 1 to 4;
aum = 0.50 for " um" = 5 to 7.

When the stack exit speed is small compared with the wind speed at the instant of emission, there is a downwash effect, causing the actual effective height of release to be less than the one calculated using the geometrical height corrected by the plume height. The XOQDOQ code uses the Briggs correction when the ratio of exit velocity to wind speed is in the range $\frac{w_o}{u_r} \leq 1.5$; the downwash correction factor becomes:

$$c = 3(1.5 - \frac{wo}{u_r})D$$ **Equation 2-7**

The plume rise elevation corrected for downwash is then compared with the plume rise due to momentum and buoyancy:

$$h_{pr} = 3\frac{w_o}{u}D$$ **Equation 2-8**

and the smaller value is chosen in the interest of conservatism in the predicted results.

Second, for stable conditions, ("j" = 5 to 7), two additional correlations are used in XOQDOQ to calculate plume rise as follows:

$$h_{pr} = 283(w_o D)^{1/2} T\left(gu\frac{\delta\theta}{\delta z}\right)^{-1/4} \qquad \textbf{Equation 2-9}$$

$$h_{pr} = 0.94(w_o D)^{2/3} T\left(gu\frac{\delta\theta}{\delta z}\right)^{-1/6} \qquad \textbf{Equation 2-10}$$

where

g	=	acceleration due to gravity (m/sec^2);
T	=	ambient air temperature (°K);
$\delta\theta/\delta z$	=	vertical potential temperature gradient (°K/m).

For stable conditions, the smallest value among the predictions of Equations 2-5, 2-6, 2-7 and 2-8 is chosen for the plume rise by the XOQDOQ code. This selection again assures conservatism in the predicted results.

In research reactors such as the UFTR, operation frequently takes place in short periods of time on the order of several hours as indicated by UFTR operation logs. XOQDOQ accounts for these purge releases by applying the following three formulae for the applicable diffusion coefficient:

$$\chi / Q = \left(u_i\left(\pi\sigma_{yj}(x)\sigma_{zj}(x) + 0.5A\right)\right)^{-1} \qquad \textbf{Equation 2-11}$$

$$\chi / Q = \left(3u_i\pi\sigma_{yj}(x)\sigma_{zj}(x)\right)^{-1} \qquad \textbf{Equation 2-12}$$

$$\chi / Q = \left(u_i\pi\sigma_{yj}(x)\sigma_{zj}(x)\right)^{-1} \exp\left(-\frac{\left(\frac{he}{\sigma_{zj}(x)}\right)^2}{2}\right) \qquad \textbf{Equation 2-13}$$

The largest diffusion coefficient value predicted in Equations 2-11, 2-12, and 2-13 is chosen for each hour. These latter values are then ordered with respect to their frequency of occurrence, and a percentile distribution is obtained.

The output of XOQDOQ is intended to be input to a radiation dose code so each

compass section is divided into segments set at different distances and the diffusion coefficients are averaged within each segment. In this fashion the sector-averaged population dose can be calculated more easily.

2.3.4.3 Meteorological Data for Long and Short-Term Diffusion Estimates

Two basic data sets were used for the UFTR diffusion calculations; they are the annual wind rose data obtained from the Gainesville Utilities for the Deerhaven plant and the corresponding wind rose data for the Crystal River Nuclear Power Station. Both sets of wind rose data are included in Appendix 2B. The data from Gainesville Utilities considers only five categories with the standard correspondence of 1 to Pasquill category A, 2 to Pasquill category B, etc., and finally 5 which includes a combination of categories E, F, and G. Category 5 was distributed into E, F, and G categories, assuming the relative weight corresponding to E, F, and G were the same as for the Crystal River data. The annual wind roses for both sets of data, as given by the output XOQDO0, are shown in Tables 2-5 and 2-6.

In order to calculate the possible plume rise, building wake and downwash effects, the UFTR release point data contained in Table 2-7 were used.

2.3.4.4 XOQDOQ-Calculated Diffusion Coefficients

As indicated in Table 2-5 and 2-6, two different computer runs were performed employing the Gainesville and Crystal River wind rose data sets. The annual average diffusion coefficients for the different compass sectors at different distances and the sector averaged diffusion coefficients are shown in Table 2-8 and Table 2-9 for the Gainesville and Crystal River sets of data respectively. The isopleths corresponding to the Gainesville and Crystal River sets of data are shown in Figures 2-20 and 2-21. Due to the small height of the vent (30 feet above mean ground level), the effective release height for each sector as a function of distance is constantly equal to zero.

2.3.4.5 Interpretation of XOQDOQ Results for Diffusion Coefficients

The wind rose data from Gainesville features a relatively isotropic distribution versus the corresponding Crystal River data, which clearly shows the West sector is the one with the worst diffusion characteristics; that is, the diffusion occurs least in the West sector.

Short term radioactivity releases of 8 hours duration were assumed for the analysis of the normal UFTR operations case. This operation time is consistent with normal working periods in the UFTR. The median values for the corresponding short-term UFTR diffusion coefficients to the Gainesville data are plotted in Figure 2-22.

The diffusion coefficients were also calculated at special locations, intended to

represent the highest exposed individuals for the study of radiation dose in normal operation. A distance of 0.10 miles was selected as a limit for the model used. The highest diffusion coefficient was only 7.2×10^{-5} sec/m^3 corresponding to the West sector as indicated by the results shown in Figure 2-23.

2.3.4.6 Experimental Verification of XOQDOQ Results

Regarding the experimental verification of the model employed in XOQDOQ for an urban area, a diffusion experimental study performed at the University of California in Los Angeles gives evidence of conservation in the Gaussian model used to calculate diffusion coefficients for an urban area [18]. However, the mathematical model which was employed in California did not consider the building wake and the downwash effects. With this simplified model, the predicted diffusion coefficients were more than ten times above those experimentally determined. Although the UCLA and UFTR cases cannot be compared on an absolute basis, a relative comparison should be valid. Therefore, because of the large conservative discrepancy between predicted diffusion coefficients and those actually measured, the calculated results for the UFTR shown in Figure 2-22 and Figure 2-23 are also expected to be very conservative.

2.3.5 Diffusion Estimates for the Design Basis Accident

The methodology and calculations presented in this section were performed as part of a Master's Thesis project [14] as reported in the licensing documentation submitted for the 1982 relicensing. There is no reason to change this analysis since it remains valid.

2.3.5.1 Objective

This section contains conservative estimates of atmospheric diffusion coefficients (χ/Q) for the UFTR site following a design basis accident. Since those coefficients are for times following an accident, they represent short-term diffusion estimates for the UFTR.

2.3.5.2 Methodology for Calculation of Diffusion Coefficients for the Design Basis Accident

There are two approaches, both conservative, recommended by the Nuclear Regulatory Commission in Regulatory Guide 1.111: "Methods for Estimating Atmospheric Transport and Dispersion of Gaseous Effluents in Routine Releases from Light-Water Cooled Reactors" [15]. The first one uses generic meteorological conditions, and is the more conservative; the second method allows the use of local meteorological conditions and is less conservative since credit for increased diffusion is possible in some regions. The results of calculations for both methods are presented in Section 2.3.5.3.

For generic conservative NRC conditions, the three cases described in the next three sections are considered for different exposure times ranging from initiation of the release up to 30 days.

2.3.5.2.1 Case 1: Exposure Times Less Than Two Hours.

For exposure times of less than two hours, the following equation is used:

$$\chi / Q = \left(\bar{u} \pi \Sigma_y \Sigma_z \right)^{-1} \qquad \textbf{Equation 2-14}$$

with

$$\Sigma_y = \left(\sigma_y^2(x) + 0.5 A_T / \pi \right)^{1/2} \qquad \textbf{Equation 2-15}$$

$$\Sigma_z = \left(\sigma_z^2(x) + 0.5 A_T / \pi \right)^{1/2} \qquad \textbf{Equation 2-16}$$

where

χ/Q = diffusion coefficient for the period 0 to 2 hours (sec/m^3)
u = windspeed assumed to be 1 m/sec
σ_y = horizontal standard deviation of the plume corresponding to Pasquill category F (m)
σ_z = standard deviation of the plume corresponding to Pasquill category F (m)
A_T = the minimum cross sectional area for the vent's building (m^2).

2.3.5.2.2 Case 2: Exposure Times from 2 to 24 Hours.

For exposure times from 2 to 24 hours, the diffusion coefficient corresponds to the sector-averaged model obtained by integrating along the horizontal direction, in the same way as was done for the normal operations case. The following expression is obtained for the diffusion coefficient from 2 to 24 hours.

$$\chi / Q = \frac{2.032}{u \sigma_z x} \qquad \textbf{Equation 2-17}$$

where:

x = downward distance (m)

Again from 2 to 24 hours, Pasquill category F, and a windspeed of 1 meter/second are assumed.

2.3.5.2.3 Case 3: Exposure Times from 1 to 30 Days.

For exposure times from 1 to 30 days, Equation 2-17 is still applicable; however, in this time range the following atmospheric conditions are assumed:

Time	Atmospheric Condition
1 to 4 days	40 % Pasquill Category D, wind speed of 3 m/sec
	60 % Pasquill Category F, wind speed of 3 m/sec
4 to 30 days	33% Pasquill Category C, wind speed of 3 m/sec
	33% Pasquill Category D, wind speed of 2 m/sec

Figure 2-24 shows the diffusion coefficients for these sets of conditions as presented in NRC Regulatory Guide 1.4 [19].

For the less conservative local meteorological conditions, the NRC recommended procedure is to use the 15th percentile value of the hourly diffusion coefficients and the annual average diffusion coefficient for each sector. These two values of diffusion coefficients are plotted on a log-log graph with the times 1 and 8760 hours (~ 1 year) as abscissas values. These two points are then joined by a straight line. The diffusion coefficient corresponding to any duration period is then obtained by simply reading the coefficient from a log-log graph.

2.3.5.3 Calculation of the Site Specific Diffusion Coefficients for the Design Basis Accident

Figure 2-24 from Reference [14] shows the variation of DBA diffusion coefficients with distance from the reactor vent starting at 100 meters. Several runs of the computer code XOQDOQ were performed in order to calculate the short-term diffusion coefficients. The locations were selected at 0.10 mile intervals from the reactor vent as shown in the UFTR environs diagram in Figure 2-25 and the 16 sectors examined (see Figure 2-5). Note that the distance to the Shands Teaching Hospital, selected and supported as the urban boundary in Section 11.1.5.1 on dose assessment, is nearly 0.5 miles from the UFTR. The releases were assumed to be purges of 2 hours, 6 hours, 16 hours, 3 days and 26 days duration, corresponding to the periods 0-2 hours, 2-8 hours, 8 hours to 1 day, 1-4 days, 4-30 days respectively. The resultant site specific diffusion coefficients for the worst sector for each time period are shown in Table 2-14 and graphically summarized in Figure 2-26. In general, the diffusion coefficient for the worst sector decreases with duration of the interval and with distance from the release point as expected. The decrease with increasing vent distance

greatly reduces maximum doses for a design basis accident.

Table 2-11 shows the Design Basis Accident diffusion coefficients obtained using the NRC standard meteorology at 0.1 mile intervals from the reactor vent. These diffusion coefficients are much larger and hence more conservative than those coefficients obtained using local meteorology as presented in Table 2-10.

2.4 Hydrologic Engineering

2.4.1 Hydrologic Description

2.4.1.1 Site and Facilities

The information in this section is taken from Reference [20] (the original UFTR Hazards Summary Report which served as the SAR for original operation) with some changes to indicate alterations in the site environs and facilities since the first licensing of the UFTR.

The terrain in the vicinity of Gainesville is gently rolling and the soil is sandy with exception of relatively small areas of muckland along the shorelines of the fresh water lakes and ponds which are numerous to the east and south of Gainesville.

The site selected for the reactor rises to the east. At the base of the rise on the west is a small valley running south and terminating in the vicinity of two ravines. Although the valley is mostly landscaped grass and driveways, the basic land features are still present today. Thus, the surface drainage of the site would be to the west and then south to these sinkholes as shown in Figure 2-17. The surface water enters the underground aquifer through these sinks. Therefore, it is anticipated that no meteorological extremes that will cause blockage of the current ingress or egress features will ever be possible.

2.4.1.2 Hydrosphere

The University of Florida is located in the southwestern quadrant of the greater Gainesville area. Gainesville is in the Central Highlands of Florida in the northern portion of the Florida peninsula. The nearest approach of the Gulf of Mexico is about 50 miles to the southwest. The Atlantic Ocean is about 65 miles to the east.

Figure 2-17, a generalized topographic map of Alachua County, shows that there are three (3) watersheds in the county. The largest watershed which drains the Gainesville, Micanopy, Archer and Newberry area is believed to contribute surface water through sinkholes and solution caverns in the limestone bedrock to the underground aquifer which eventually feeds Wacasassa River, which flows into the Gulf of Mexico near Cedar Key to the west of Gainesville.

While the storm sewer system of the city of Gainesville is not indicated, it would

follow much the same pattern as the existing and proposed sewage lines for the University of Florida shown in Figure 2-27 and 2-28. In general, there are two natural drainage zones for the greater Gainesville area. The dividing line between these zones follows very closely the line formerly occupied by the Seaboard Railway roadbed running diagonally from the southwest to the northeast. With the exception of a small portion in the northeast corner of Gainesville, the area to the north and west of the former railroad bed, containing approximately 31.5 square miles, drains toward Hogtown Creek and its tributaries which flow into Lake Kanapaha located in the southwest corner of greater Gainesville. The drainage pattern of the zone laying south and east of the railway is not as clearly defined as the northwest zone, but, in general, is east and south. Water falling on the eastern portion drains eventually into Newnan's Lake and water falling in the southern portion drains into Sweetwater Creek, Biven's Arm and Payne's Prairie. Figure 2-29 shows qualitatively the average volume flow of flow of surface streams in Florida. Since Gainesville is at the headwaters of the St. Johns, Suwannee and Wacassassa River Systems, it has a very small average surface stream flow. There are no surface streams of any consequence in the Gainesville area. During the dry season, which is generally March, April and May, the surface flow of the creeks in the area decreases to nearly zero although there is still a small subsurface flow. The water table is close to the surface and the movement of the ground water is very rapid because of the high porosity and permeability of sandy soil and cavernous limestone bedrock.

The city of Gainesville and vicinity receives its water supply from the .municipal water treatment plant. All of the water entering the treatment plant is obtained from eleven wells ranging from 367 to 750 ft. in depth. Spring or surface water is not used for the municipal supply but several springs supply water for agriculture and industry.

The interrelationship between rainfall, evapotranspiration, deficit and percolate is known as the agrohydrologic balance. Figures 2-30A and 2-30B show this interrelationship for Gainesville during 1953 and 1954. From this relationship it can be observed that the amount of water percolating through the surface soil varies from year to year in a complex manner. The amount of percolating water will determine the soil water dilution factor in the event of accidental release of radioactivity from the UF Training Reactor. It should be noted that the amount of percolating water in Gainesville is always relatively small and often there are months when it drops to zero, generally in the spring and summer [20].

2.4.2 Floods

2.4.2.1 Flood History

Exhaustive studies have indicated no record of any major flood in the general UFTR site area during the past 100 years.

2.4.2.2 Flood Design Considerations

Because of its inland position which removes the potential for tidal flooding and

because of the well-drained location of the UFTR site, no special consideration is given to floods in the UFTR design. At any rate, the self-contained design of the UFTR makes it more resistant to any hypothetical flood condition. Finally, emergency flood procedures are addressed in the UFTR Standard Operating Procedures so no further consideration is necessary here [21].

2.4.2.3 Effects of Local Intense Precipitation

As discussed earlier in Section 2.4.2.2, the location of the reactor site in reference to the drainage system, including the University of Florida storm sewage system, provides sufficient drainage for all runoff water likely to occur due to rain: therefore, it is virtually impossible for local precipitation, at most 9.93 inches in one day (1941), ever to affect the reactor building.

2.4.3 Probable Maximum Flood (PMF) on Streams and Rivers

Since the UFTR is an essentially self-contained reactor design requiring minimal cooling by an ultimate heat sink, since no major streams or rivers run near the site area, and since the location itself is well-drained, it is felt that the probable margin flood (PMF) on streams and rivers in North Central Florida has no potential effects on the UFTR facility and its operation. For these same reasons, probable maximum precipitation, precipitation losses, runoff and stream course models, probable maximum flood flow, water level determinations due to PMF and coincident wind wave activity need not be considered further.

2.4.4 Potential Dam Failures, Seismically Induced

There are no dams in the University of Florida - Gainesville area which could affect the reactor site in case of failure. Therefore, dam failures and attendant water levels and effects need not be considered further.

2.4.5 Probable Maximum Surge and Seiche Flooding

Because of the UFTR site location, there are no surface bodies of water close enough to affect the UFTR site via seiche flooding or surges of any kind.

2.4.6 Probable Maximum Tsunami Flooding

Due to its inland location, approximately 50 miles from the Gulf of Mexico, tsunami flooding is predicted to have no effect on the UFTR site. Only one tsunami, or seismic sea wave, has ever been noted along the Gulf Coast of the United States. This wave was caused by the Puerto Rican earthquake of October 11, 1918 and was very small as recorded on the

tide gauge at Galveston, Texas. Since the distance to the Atlantic Ocean is even larger at 65 miles, tsunami from Atlantic Ocean has no effect on the UFTR site.

2.4.7 Ice Effects

Since the site has no surface water bodies on it and since the climate makes the formation of significant amounts of ice extremely unlikely, there are no ice effects to be considered for the UFTR site from ice jam floods, wind-driven ice ridges or other ice-produced effects and forces which could affect safety-related UFTR facilities.

2.4.8 Flooding Protection Requirements

The self-protected, self-controlling design of the UFTR along with its location in a flood-free area make additional flood protection considerations unnecessary.

2.4.9 Groundwater

Groundwater information for the UFTR site and environs is contained in Section 2.5.4.

2.4.10 Technical Specifications and Emergency Operations Requirements

Detailed procedures designed to minimize the impact of floods, and protective measures to be considered in case of floods are outlined in applicable emergency procedures for the UFTR facility [21].

2.5 Geology, Seismology and Geotechnical Engineering

2.5.1 Basic Geology and Seismic Information

2.5.1.1 Regional Geology

The regional geology of the Gainesville area is represented by the Florida Geological Survey data found in Figure 2-31. Cross Section B-B of Figure 2-31 shows the general geology of the Gainesville area. The solid bedrock in this area is porous and cavernous Ocala limestone which occurs in a broad truncated dome with its crest in Levy County southwest of Gainesville. The Ocala formation is overlain by other porous limestones and semipermeable sandy clays (Hawthorne formation). This is capped by loose surface sands. In general, all the formations are quite porous and permeable. Locally, however, the Hawthorne sandy clays confine the ground water in the underlying porous limestones under artisian pressure [20].

Because of the porous nature of these formations and their relation to the hydrologic description of the region, some information on the geological description of this area has been included in Section 2.4.1.2.

2.5.1.2 Site Geology

The specific site geology is very similar to that of the region as a whole. The physical and chemical properties of the soil, sub-soil and bedrock are such that negligible radioactive decontamination or absorption can be expected.

Studies have shown that the soils are sandy and possess very little ion-exchange capacity. The calcium carbonate (limestone) bedrock has virtually no capacity for preventing the rapid movement of radioactive products toward the ground water table. It would only react chemically to neutralize acid solutions and precipitate insoluble carbonates. It has virtually no ion-exchange capacity and is highly porous and permeable so that any chemical precipitates formed would only slightly retard the flow of radioactive liquids through the bedrock.

Most of the Gainesville area and that part of the campus of the University of Florida north of Radio Road (Figure 2-3), including the UFTR site, is underlain by a loamy fine-sand type of soil. This was derived from residual Hawthorne formation and is characterized by a typical slope of 2 to 7 percent, light brown or brownish grey surface soil, light yellowish brown or pale brown subsoil, nearly loose to loose with good natural drainage [20]. The soil data for all the test borings undertaken on the site for the original construction are summarized in Tables 2-12 through 2-15. Additional test boring data was obtained as a result of construction of the 6 inch water well which is the source of the secondary water supply of the UFTR cooling system. The following data is available as a result of test borings: Limestone: 75' depth, Water Table: 89' depth.

Florida is a relatively inactive area for seismic activity. Due to its compact size and few auxiliary systems, the UFTR is much less susceptible to earth movement problems than large power reactors or facilities with systems spread over larger areas. There is no effect on the system due to geological conditions affecting other situations on the University of Florida campus. Earthquakes are not a serious threat but data on their occurrence and other possible effects are presented in Sections 2.5.2 to 2.5.6.

2.5.2 Vibratory Ground Motion

As reported in Reference [6], seismic analyses to obtain response spectra were conducted by Weston Geophysical Research, Inc. for Florida Power Corporation's Crystal River Site. The Reverend Daniel Linehan, S.J., Director of Weston Observatory, acted as a consultant on the seismic analysis. The response spectra were completed by Dr. C. Allen Cornell, Department of Civil Engineering, and Massachusetts Institute of Technology.

Although these data are presented for the Crystal River site, they are very similar to and can relate directly to the UFTR site because the soil strata conditions are similar and all of Central Florida has a seismically stable history, relatively free of earthquakes.

The State of Florida is an area which is considered seismically inactive; there is no record of a severe earthquake in Florida. There is ample evidence that Florida has been remarkably stable and free of earthquakes for about one million years, and is considered to be one of the most stable areas in the United States. Only eight (8) earthquakes of Intensity IV (Modified Mercalli Scale) or greater have had their epicenter within 50 miles of the Crystal River plant site. Only one tsunami, or seismic sea wave, has ever been noted along the Gulf Coast of the United States. This wave was caused by the Puerto Rican earthquake of October 11, 1918, and was very small as recorded on the tide gauge at Galveston, Texas. There is no record of a tsunami or seismic sea wave ever having affected the Crystal River area. It is highly unlikely that, if a tsunami did occur, it would exert its effects inland as far as Gainesville, Florida, which is over 50 miles inland. The same is even more applicable for the Atlantic Ocean since the east coast is about 65 miles away.

The two strongest earthquakes to have affected the site area in north central Florida, were the northern Florida earthquake of January 12, 1879, which was listed as Modified Mercalli IV, and the Charleston, South Carolina earthquake of 1885 which had an epicentral Intensity X, Modified Mercalli. There is no evidence that seismic activity in the southern appalachians or in the greater Antilles Islands of the West Indies had any effect on the Crystal River site, and consequently the UFTR site.

An attenuation curve showing earthquake intensity variation with distance is shown in Figure 2-32 for the Atlantic and Gulf Plains indicates a rather slow attenuation of intensity with distance, likely due to the deep Cutaceous sediment areas of the Coastal Plain Regions. Based upon this attenuation information, the Florida earthquake of 1879 would have had intensity no higher than V at the Crystal river site.

Based upon the relationship between earthquake intensity and ground acceleration given in Nuclear Reactors and Earthquakes, TID-7024, U.S. Atomic Energy Commission [22], the Charleston, South Carolina earthquake would have resulted in a ground acceleration of about 0.025g at the UFTR site. Based on this data and previous historical data, no special consideration was given in the design of the reactor building beyond making it a "vault-type" building as defined in 10 CFR 73.2(o).

2.5.3 Surface Faulting

There is ample evidence that Florida has been stable and free of earthquakes for about one million years, and it is considered to be one of the most stable areas in the entire United States. [6] There have, however, been several small earth tremors which have caused slight damage such as small cracks in plaster wall in some areas of the state [20].

2.5.4 Stability of Subsurface Materials and Foundations

The information defining the conditions of the strata supporting the reactor building foundations was included in Section 2.5.1.2 - Site Geology along with the test records and summaries of soil strata compositions. The limerock formations are very stable geologically as indicated by the relative absence of earth movement activity in Florida over the past million years.

2.5.5 Stability of Slopes

There are no rocks on soil slopes of concern for the UFTR site. The general downward incline toward the west and south eliminates the possibility of drainage or flooding problems. The test boring data in Section 2.5.1.2 and the general site and area topography have shown that this area is very stable. There is no danger of landslides since the general slope of the land is a gradual incline with no sharp contours. The test borings also indicate there is no concern with ravines affecting the topography of the UFTR site.

2.5.6 Embankments and Dams

This section does not apply to the UFTR site since these facilities are not needed for the UFTR facility and are not present in the UFTR site.

Table 2-1 Population Distribution around the UFTR

Sector	Population Within 0-1 miles	Population Within 1-5 miles (*)
N	649	12749
NNE	2401	8025
NE	1327	9312
ENE	1166	9190
E	3434	7893
ESE	1454	9181
SE	1572	1726
SSE	106	1726
S	136	2381
SSW	0	5083
SW	0	7188
WSW	0	3437
W	2746	16798
WNW	415	5492
NW	685	2614
NNW	301	16367
Total	16391	119160

(*) Gainesville city population distribution concentrated within a 5 mile circle around the UFTR.

Table 2-2 Gainesville Regional Airport – Annual Air Traffic Volume Report[1]

	1961	1975	1996	2000	%Change 2000 over 1975
PASSENGER (NUMBER)					
Deplaned	5,621	102,978	164,761	144,736	40%
Enplaned	7,002	104,020	163,315	144,996	39%
Totals	12,623	206,998	328,076	289,732	40%
CARGO (POUNDS) *					
Deplaned	-		286,682	169,238	
Enplaned	-		551,827	209,322	
Totals			838,509	378,560	
TOWER OPERATIONS (NUMBER) **					
Air Carrier (60 or more seats)		3656	3,260	1,800	-51%
Commuter/Taxi		3,824	14,028	8,827	131%
General Aviation		82,146	61,454	65,599	-20%
Military		2,657	5,687	4,741	78%
Totals		92,283	84,429	80,967	-12%

* Data available from January 1978

** Data available from January 1975

[1] Source : Administration of Gainesville Regional Airport

Table 2-3 Gainesville Regional Airport number of incidents [1]and accidents[2] from January 1983 through December 2000.[3]

Year	Number of Incidents	Number of Accidents				
		Type of Injury				Total
		Fatal	Serious	Minor	No Effect	
1983	2	-	-	-	3	3
1984	2	-	-	1	-	1
1985	1	1	-	-	-	1
1986	2	-	-	-	1	1
1987	1	-	1		1	2
1988	3	-	-	-	-	0
1989	2	-	-	2	1	3
1990	-	-	-	-	-	0
1991	4	-	-	1	-	1
1992	-	-	-	-	1	1
1993	-	-	-	-	1	1
1994	-	-	1	-	1	2
1995	3	1	-	-	-	1
1996	4	-	-	-	-	0
1997	1	-	-	-	-	0
1998	-	-	-	-	-	0
1999	-	-	-	-	-	0
2000	1	-	-	1	-	1

[1] **INCIDENT** : An occurrence other than an accident associated with the operation of an aircraft, which affects or could affect the safety of operations.

[2] **ACCIDENT** :An occurrence associated with the operation of an aircraft which takes place between the time any person boards the aircraft with the intention of flight and until such time as all such persons have disembarked, and in which any person suffers death or serious injury or in which the aircraft receives substantial damage.

[3] **Source**: NTSB AVIATION ACCIDENT/INCIDENT DATABASE REPORT http://nasdac.faa.gov/asp/fw_ntsb.asp

Table 2-4A Gainesville Climatological Data Summary: Normals, Means and Extremes (1961 - 2000) [5]

Month	Temperature							Normal Heating Degree days (Base 65°F)	Precipitation (inches)							
	Normal			Extremes												
	Daily Maximum	Daily Minimum	Monthly	Record Highest	Year	Record Lowest	Year		Normal Total	Maximum Monthly	Year	Minimum Monthly	Year	Maximum in 24 hours	Year	Snow, Ice Pellets Normal (in)
J	65.6	42.5	54.1	83	1999	10	1985	384	3.35	9.01	1994	1.14	1989	2.71	1999	0.0
F	68.1	44.1	56.2	87	1997	18	1996	282	4.21	11.58	1998	0.32	1991	4.60	1998	T
M	74.9	50.7	62.8	89	1997	28	1996	138	3.65	11.13	1996	0.61	1999	3.33	1991	0.0
A	80.7	55.8	68.3	95	1991	35	1996	30	2.64	7.42	1997	0.08	1998	2.62	1985	0.0
M	86.1	62.6	74.3	98	1989	42	1992	0	3.76	6.24	1991	0.51	2000	3.42	1985	0.0
J	89.5	68.3	79.0	102	1985	50	1984	0	6.77	12.86	1992	2.22	1988	4.41	1990	0.0
J	90.7	70.9	80.8	108	2000	62	1988	0	6.80	11.10	1996	1.52	1992	4.96	1996	0.0
A	90.1	71.0	80.5	99	1999	62	1984	0	8.01	15.84	1985	2.49	1987	3.45	1993	0.0
S	87.3	68.9	78.1	97	1997	52	1993	0	5.27	11.97	1988	2.00	1993	6.16	1988	0.0
O	81.0	59.7	70.4	91	1989	33	1989	22	1.82	7.98	1993	T	1987	5.13	1992	0.0
N	74.3	50.5	62.4	88	1986	25	2000	150	2.26	4.51	1987	0.24	1998	2.29	1997	0.0
D	68.1	44.6	56.4	84	1998	16	1989	310	3.27	9.60	1997	0.21	1984	2.64	1997	T
YR	79.7	57.5	68.6	108	2000	10	1985	1316	51.81	15.84	1985	T	1987	6.16	1988	0.0

Note: Normals (temperature and precipitation) are 30-year averages (1961 –1990)
T indicates trace precipitation, an amount greater than zero but less than the lowest reportable value.
Maximum and minimum precipitation values are for observations over the last 17 years (1984 – 2000).

Table 2-4B Gainesville Climatological Data Summary: Relative Humidity (1961 – 1990) [5]

Month	Normal (%)	Hour 01 *	Hour 07 *	Hour 13 *	Hour 19*
Jan	77	87	89	61	75
Feb	75	87	90	57	68
Mar	75	89	91	55	67
Apr	71	87	90	50	62
May	72	88	90	50	63
Jun	78	92	93	59	72
Jul	81	94	94	63	78
Ago	83	94	96	65	81
Sep	83	94	96	65	82
Oct	80	91	92	62	80
Nov	82	93	94	63	82
Dec	80	91	92	63	81
Year	78	91	92	59	74

* Local Time

Table 2-5 XOQDOQ Calculated Annual Wind Rose Data for UFTR using Gainesville Data.

```
0 1 00 1 1 1 0 0 0 0
UFTR WITH GAINESVILLE DATA
  6    7    1   15    1    1    0
 10  101 2.26   -8    0

 0.1 0.07 0.07 0.03    0    0 0.07    0 0.03    0 0.03    0 0.03  0.1 0.07    0
0.21 0.34 0.17 0.31 0.31 0.14 0.17 0.17  0.1 0.03 0.07 0.21 0.24 0.38 0.14 0.14
   0    0    0    0    0    0    0    0    0    0    0    0    0    0    0    0
   0    0    0    0    0    0    0    0    0    0    0    0    0    0    0    0
   0    0    0    0    0    0    0    0    0    0    0    0    0    0    0    0
   0    0    0    0    0    0    0    0    0    0    0    0    0    0    0    0
0.14 0.07 0.07  0.1 0.14  0.1 0.17 0.14 0.21 0.03 0.17 0.21 0.17 0.07 0.14 0.17
0.27 0.07 0.41 0.24 0.45 0.34 0.17 0.34  0.1 0.14 0.14 0.17 0.24 0.24 0.21 0.27
0.27 0.21 0.24 0.34 0.65 0.51 0.41 0.45 0.21 0.21 0.41 0.17 0.72 0.41 0.55 0.51
   0    0    0    0    0    0    0    0    0    0    0    0    0    0    0    0
   0    0    0    0    0    0    0    0    0    0    0    0    0    0    0    0
   0    0    0    0    0    0    0    0    0    0    0    0    0    0    0    0
   0    0    0    0    0    0    0    0    0    0    0    0    0    0    0    0
0.03  0.1  0.1 0.07 0.07  0.1 0.14 0.14  0.1 0.14    0 0.07 0.03 0.17 0.07  0.1
0.21 0.34 0.48 0.38 0.55 0.68 0.38 0.45 0.38 0.31 0.27 0.27 0.68 0.24 0.31 0.24
0.07 0.17 0.31 0.31 0.62 0.62 0.31 0.21 0.27 0.21 0.17 0.24 0.58 0.65 0.17  0.1
   0    0    0    0    0    0    0    0    0    0    0 0.03 0.03    0    0    0
   0    0    0    0    0    0    0    0    0    0    0    0    0    0    0    0
  0.1 0.34 0.38 0.24 0.27 0.21 0.38 0.31 0.41 0.38 0.21 0.34 0.27 0.17 0.34 0.31
0.92 0.92  1.1 0.82 1.58 1.23 0.86 0.65 0.79 0.41 0.45 0.34 0.86  1.1 0.86 1.16
0.82  1.2  1.2 1.61 1.68 1.64 0.92 0.75  1.2 0.75 0.86 1.13 2.36 0.72 0.89  1.2
0.03 0.17 0.72 0.31 0.68 0.48 0.55 0.45 0.65 0.27 0.51 0.79 0.13 0.96 0.41 0.21
   0    0    0    0    0 0.03    0 0.03    0    0 0.03 0.07 0.07    0    0    0
   0    0    0    0    0    0    0    0    0    0    0 0.03    0    0    0    0
0.48 0.39  0.4 0.46 0.49 0.48 0.32 0.43 0.32 0.41 0.41 0.36 0.41 0.52 0.37 0.44
0.44 0.31 0.45 0.34 0.57 0.33 0.29 0.16 0.19 0.11 0.12 0.11  0.8 0.81 0.41 0.44
   0    0    0    0    0    0    0    0    0    0    0    0    0    0    0    0
   0    0    0    0    0    0    0    0    0    0    0    0    0    0    0    0
   0    0    0    0    0    0    0    0    0    0    0    0    0    0    0    0
   0    0    0    0    0    0    0    0    0    0    0    0    0    0    0    0
0.24 0.19  0.2 0.23 0.24 0.24 0.16 0.22 0.16 0.21 0.21 0.18  0.2 0.26 0.19 0.21
0.22 0.16 0.23 0.17 0.29 0.17 0.13 0.08  0.1 0.06 0.06 0.05  0.4 0.41 0.21 0.22
   0    0    0    0    0    0    0    0    0    0    0    0    0    0    0    0
   0    0    0    0    0    0    0    0    0    0    0    0    0    0    0    0
   0    0    0    0    0    0    0    0    0    0    0    0    0    0    0    0
   0    0    0    0    0    0    0    0    0    0    0    0    0    0    0    0
0.12 0.09  0.1 0.12 0.12 0.12 0.08 0.11 0.08 0.11 0.11 0.09  0.1 0.13 0.09 0.11
0.11 0.08 0.12 0.09 0.15 0.08 0.08 0.04 0.05 0.03 0.03 0.02  0.2  0.2 0.12 0.11
   0    0    0    0    0    0    0    0    0    0    0    0    0    0    0    0
   0    0    0    0    0    0    0    0    0    0    0    0    0    0    0    0
   0    0    0    0    0    0    0    0    0    0    0    0    0    0    0    0
   0    0    0    0    0    0    0    0    0    0    0    0    0    0    0    0
 101 3.45  6.9 11.5 18.4 24.15   30
 300  300  300  300  300  300  300  300  300  300  300  300  300  300  300  300
   0    0    0    0    0    0    0    0    0    0    0    0    0    0    0    0
  16
uftr site bound.
   5  160   14  160   15  160   16  160    1  160    2  160    3  160    4  160
uftr release point
0.15 0.86 8.25 6.75  163   10    0
a  0    0    8
```

Table 2-6 XOQDOQ Calculated Annual Wind Rose Data for UFTR using Crystal River Data (10/1/76 – 9/30/77)

```
100111000
UFTR With Crystal River Data
    7    7    1   15    1    1    0
   10  101 2.26   -8    0

    0 0.01 0.02 0.04 0.04    0 0.01 0.03    0 0.01 0.03 0.11 0.08 0.04 0.04    0
    0 0.01 0.04 0.07 0.06    0 0.02 0.05    0 0.02 0.05 0.19 0.14 0.07    0    0
    0  0.1 0.09 0.34 0.26 0.26 0.11 0.17 0.15 0.16 0.24 1.05 1.42 0.82 0.09 0.01
 0.02 0.29  0.4 0.52 0.52 0.52  0.3 0.29 0.29 0.26 0.73 1.21 1.91 1.25 0.17 0.17
 0.04 0.07  0.1 0.32 0.29 0.16 0.07 0.14 0.11 0.24 0.36 0.06 0.19 0.27 0.12 0.14
    0    0    0    0    0    0    0    0 0.04 0.09 0.01    0    0  0.1 0.06 0.01
    0    0    0    0    0    0    0    0 0.02    0    0    0    0    0    0    0
    0    0    0    0    0    0    0    0    0    0    0 0.01    0    0    0    0
    0    0    0 0.01 0.04 0.04    0 0.02 0.05 0.05 0.06 0.14 0.05 0.02    0    0
    0 0.01 0.02 0.16 0.15 0.15 0.09 0.11 0.06  0.1 0.25 0.17 0.24 0.21 0.09    0
 0.04 0.07 0.11 0.17 0.17 0.07  0.1 0.07 0.04 0.05 0.11 0.05 0.19 0.26 0.16 0.04
    0    0 0.01 0.02 0.02 0.02 0.06 0.01 0.05 0.02    0 0.05 0.05 0.16 0.06 0.04
    0    0    0    0    0    0    0    0    0    0    0 0.02 0.01 0.04 0.05 0.06
    0    0    0    0    0    0    0    0    0    0    0    0    0    0    0    0
    0    0    0    0 0.01    0    0    0 0.01    0 0.02    0    0    0    0    0
    0    0    0 0.01 0.04 0.01 0.01 0.01 0.02 0.01 0.07 0.01 0.01    0    0    0
    0    0 0.06 0.09 0.16 0.04 0.02 0.02 0.05 0.04 0.07 0.24  0.1 0.09 0.04    0
    0 0.04 0.09 0.06  0.1 0.06 0.05    0 0.01 0.04 0.05 0.05 0.06  0.2 0.14 0.06
    0    0    0    0 0.01    0 0.01    0 0.02 0.02 0.02    0 0.01 0.07 0.09 0.04
    0    0    0    0    0    0    0    0    0    0 0.01    0    0 0.05 0.01    0
    0    0    0    0    0    0    0    0    0    0    0    0    0    0    0    0
    0 0.01 0.03 0.05 0.09 0.04 0.04 0.04 0.05 0.03 0.04 0.08 0.05 0.03 0.03 0.01
    0 0.06 0.17  0.3 0.49 0.24 0.21  0.2 0.27 0.17 0.24 0.42 0.29 0.16 0.17 0.04
    0 0.39 0.61 0.98  0.7 0.76 0.51 0.37 0.27 0.32 0.57 0.65 0.73 1.07 0.49 0.22
 0.05 0.55 1.73 1.81 0.59  0.5  0.4  0.3 0.42 0.22 0.45 0.56 0.65 1.16 0.95  0.3
 0.02 0.15 0.05 0.31 0.04 0.02 0.04 0.07 0.21 0.24 0.36 0.22 0.14 0.59 0.59  0.1
    0    0    0    0    0    0    0    0 0.04 0.06 0.01 0.03    0 0.06 0.09 0.01
    0    0    0    0    0    0    0    0    0    0    0    0    0    0    0    0
 0.01 0.06 0.05 0.15 0.17 0.15 0.12 0.11  0.1 0.05 0.08 0.06 0.11 0.11 0.06 0.02
 0.02 0.27 0.22  0.7 0.78 0.67 0.55  0.5 0.45 0.22 0.35 0.27 0.49 0.49 0.27 0.09
 0.22 0.98  0.6 1.81 1.92 1.11 0.96 0.85 0.54  0.4 0.36 0.73 0.82 0.96  0.5 0.34
  0.2 0.41 0.76 0.72  0.5 0.56 0.34 0.36 0.55  0.5 0.41 0.42 0.64 0.54 0.37  0.3
    0    0 0.02 0.01    0 0.07 0.02  0.1 0.16  0.3 0.12 0.04    0  0.1 0.01 0.02
    0    0    0    0    0    0    0    0    0    0    0    0    0    0    0    0
    0    0    0    0    0    0    0    0    0    0    0    0    0    0    0    0
    0  0.1 0.07 0.13 0.39 0.29  0.2 0.12 0.04 0.06 0.02 0.04 0.02 0.05 0.04 0.02
 0.01 0.26 0.19 0.35 1.03 0.78 0.52 0.32 0.11 0.16 0.05  0.1 0.06 0.12  0.1 0.06
 0.04 0.41 0.17 0.95 1.23  0.6 0.54 0.12 0.12 0.09 0.06 0.02 0.14 0.04 0.07 0.12
 0.05 0.09 0.14 0.21    0 0.02    0 0.01 0.02 0.04    5    0    0    0 0.01    0
    0    0    0    0    0    0    0    0    0 0.01    0    0    0    0    0    0
    0    0    0    0    0    0    0    0    0    0    0    0    0    0    0    0
    0    0    0    0    0    0    0    0    0    0    0    0    0    0    0    0
 0.02 0.05 0.09 0.15 0.22 0.15 0.05 0.02    0 0.01 0.01 0.01    0    0 0.01    0
 0.06 0.19 0.32 0.52 0.78 0.54 0.17 0.06 0.01 0.05 0.04 0.04    0    0 0.02    0
 0.07 0.41 0.15 0.31 0.36  0.2 0.11 0.12 0.05 0.02 0.02 0.01 0.01    0 0.01 0.01
 0.02 0.11 0.05 0.11    0    0    0 0.01 0.04 0.01    0    0    0    0    0    0
    0    0    0    0    0    0    0    0    0    0    0    0    0    0    0    0
    0    0    0    0    0    0    0    0    0    0    0    0    0    0    0    0
    0    0    0    0    0    0    0    0 0.29    0    0    0    0    0    0    0
  101    3    6   10   16   21   25   30
  300  300  300  300  300  300  300  300  300  300  300  300  300  300  300  300
    0    0    0    0    0    0    0    0    0    0    0    0    0    0    0    0
   16
uftr site bound.
    9  160    2  160    3  160    4  160    5  160    6  160    7  160    8  160
   10  160   11  160   12  160   13  160   14  160   15  160   16  160    1  160
uftr release point
 0.15 0.86 8.25 6.75  163   10    0
    a    0    0    8
```

Table 2-7 UFTR Release Point Summary Data

Average vent exit velocity*	0.15 m/sec
Vent inside diameter	0.86 m
Height of the vent release point	8.25 m
Height of the building vent	6.75 m
Minimum UFTR building cross sectional area	165 m^2
Building vent air flow	0.087 m/sec

*The average vent exit velocity was obtained by dividing the air flow by the cross sectional area.

Table 2-8 Annual Average UFTR Diffusion Coefficients Based Upon Gainesville Data

USNRC COMPUTER CODE - XOQDOQ, VERSION 2.0 RUN DATE: 10-24-2001 7:56
UFTR WITH GAINESVILLE DATA
uftr release point
NO DECAY, UNDEPLETED
ANNUAL AVERAGE CHI/Q (SEC/METER CUBED) DISTANCE IN MILES FROM THE SITE

SECTOR	0.25	0.5	0.75	1	1.5	2	2.5	3	3.5	4	4.5
S	1.15E-05	3.44E-06	1.69E-06	1.04E-06	5.46E-07	3.50E-07	2.50E-07	1.91E-07	1.52E-07	1.25E-07	1.06E-07
SSW	1.09E-05	3.24E-06	1.59E-06	9.83E-07	5.12E-07	3.27E-07	2.33E-07	1.77E-07	1.41E-07	1.15E-07	9.70E-08
SW	1.27E-05	3.79E-06	1.86E-06	1.15E-06	5.97E-07	3.81E-07	2.70E-07	2.05E-07	1.63E-07	1.34E-07	1.13E-07
WSW	1.21E-05	3.63E-06	1.79E-06	1.10E-06	5.73E-07	3.66E-07	2.61E-07	1.98E-07	1.58E-07	1.30E-07	1.09E-07
W	1.53E-05	4.55E-06	2.24E-06	1.38E-06	7.15E-07	4.56E-07	3.24E-07	2.46E-07	1.95E-07	1.60E-07	1.35E-07
WNW	1.31E-05	3.92E-06	1.93E-06	1.19E-06	6.15E-07	3.92E-07	2.79E-07	2.11E-07	1.68E-07	1.38E-07	1.16E-07
NW	1.03E-05	3.05E-06	1.50E-06	9.21E-07	4.77E-07	3.03E-07	2.15E-07	1.63E-07	1.29E-07	1.06E-07	8.90E-08
NNW	1.05E-05	3.14E-06	1.54E-06	9.48E-07	4.92E-07	3.14E-07	2.23E-07	1.69E-07	1.35E-07	1.10E-07	9.29E-08
N	1.01E-05	2.98E-06	1.47E-06	9.02E-07	4.67E-07	2.97E-07	2.10E-07	1.59E-07	1.26E-07	1.03E-07	8.67E-08
NNE	9.52E-06	2.87E-06	1.41E-06	8.73E-07	4.55E-07	2.91E-07	2.07E-07	1.57E-07	1.25E-07	1.03E-07	8.66E-08
NE	9.28E-06	2.78E-06	1.37E-06	8.42E-07	4.38E-07	2.80E-07	1.99E-07	1.52E-07	1.21E-07	9.92E-08	8.35E-08
ENE	9.24E-06	2.75E-06	1.35E-06	8.30E-07	4.30E-07	2.74E-07	1.94E-07	1.47E-07	1.17E-07	9.59E-08	8.06E-08
E	1.44E-05	4.31E-06	2.12E-06	1.31E-06	6.78E-07	4.32E-07	3.07E-07	2.33E-07	1.85E-07	1.52E-07	1.28E-07
ESE	1.48E-05	4.45E-06	2.19E-06	1.35E-06	7.05E-07	4.52E-07	3.23E-07	2.46E-07	1.96E-07	1.61E-07	1.36E-07
SE	1.12E-05	3.35E-06	1.65E-06	1.01E-06	5.27E-07	3.37E-07	2.39E-07	1.82E-07	1.45E-07	1.19E-07	9.98E-08
SSE	1.25E-05	3.75E-06	1.85E-06	1.14E-06	5.91E-07	3.77E-07	2.68E-07	2.04E-07	1.62E-07	1.33E-07	1.12E-07

ANNUAL AVERAGE CHI/Q (SEC/METER CUBED) DISTANCE IN MILES FROM THE SITE

SECTOR	5	7.5	10	15	20	25	30	35	40	45	50
S	9.08E-08	5.13E-08	3.45E-08	1.99E-08	1.35E-08	1.01E-08	7.90E-09	6.45E-09	5.42E-09	4.65E-09	4.06E-09
SSW	8.32E-08	4.66E-08	3.10E-08	1.77E-08	1.19E-08	8.81E-09	6.90E-09	5.61E-09	4.70E-09	4.02E-09	3.50E-09
SW	9.65E-08	5.39E-08	3.59E-08	2.05E-08	1.38E-08	1.02E-08	8.00E-09	6.51E-09	5.45E-09	4.66E-09	4.06E-09
WSW	9.37E-08	5.26E-08	3.52E-08	2.01E-08	1.36E-08	1.01E-08	7.92E-09	6.46E-09	5.41E-09	4.64E-09	4.04E-09
W	1.16E-07	6.47E-08	4.31E-08	2.46E-08	1.66E-08	1.23E-08	9.64E-09	7.85E-09	6.57E-09	5.63E-09	4.90E-09
WNW	9.93E-08	5.56E-08	3.70E-08	2.11E-08	1.43E-08	1.06E-08	8.28E-09	6.75E-09	5.65E-09	4.84E-09	4.21E-09
NW	7.63E-08	4.26E-08	2.84E-08	1.61E-08	1.09E-08	8.05E-09	6.30E-09	5.12E-09	4.29E-09	3.67E-09	3.19E-09
NNW	7.97E-08	4.48E-08	2.99E-08	1.71E-08	1.16E-08	8.60E-09	6.74E-09	5.50E-09	4.61E-09	3.95E-09	3.44E-09
N	7.43E-08	4.13E-08	2.75E-08	1.56E-08	1.05E-08	7.72E-09	6.03E-09	4.90E-09	4.10E-09	3.50E-09	3.05E-09
NNE	7.43E-08	4.16E-08	2.78E-08	1.59E-08	1.07E-08	7.95E-09	6.23E-09	5.07E-09	4.25E-09	3.64E-09	3.17E-09
NE	7.18E-08	4.04E-08	2.71E-08	1.55E-08	1.05E-08	7.83E-09	6.14E-09	5.01E-09	4.21E-09	3.61E-09	3.14E-09
ENE	6.92E-08	3.87E-08	2.58E-08	1.47E-08	9.92E-09	7.33E-09	5.74E-09	4.67E-09	3.91E-09	3.35E-09	2.91E-09
E	1.10E-07	6.16E-08	4.12E-08	2.35E-08	1.59E-08	1.18E-08	9.25E-09	7.54E-09	6.32E-09	5.42E-09	4.72E-09
ESE	1.17E-07	6.59E-08	4.42E-08	2.54E-08	1.73E-08	1.28E-08	1.01E-08	8.23E-09	6.91E-09	5.93E-09	5.17E-09
SE	8.57E-08	4.81E-08	3.21E-08	1.84E-08	1.24E-08	9.20E-09	7.21E-09	5.87E-09	4.92E-09	4.22E-09	3.67E-09
SSE	9.61E-08	5.39E-08	3.60E-08	2.06E-08	1.39E-08	1.03E-08	8.06E-09	6.56E-09	5.50E-09	4.71E-09	4.10E-09

uftr release point
NO DECAY, UNDEPLETED
CHI Q (SEC METER CUBED) FOR EACH SEGMENT
SEGMENT BOUNDARIES IN MILES FROM THE SITE

DIRECTION FROM SITE	.5-1	1.-2.	2.-3.	3.-4.	4.-5	5.-10	10.-20	20-30	30-40	40-50
S	1.79E-06	5.70E-07	2.53E-07	1.53E-07	1.06E-07	5.26E-08	2.03E-08	1.01E-08	6.47E-09	4.66E-09
SSW	1.69E-06	5.34E-07	2.35E-07	1.41E-07	9.73E-08	4.78E-08	1.81E-08	8.88E-09	5.63E-09	4.03E-09
SW	1.97E-06	6.23E-07	2.74E-07	1.64E-07	1.13E-07	5.54E-08	2.10E-08	1.03E-08	6.53E-09	4.67E-09
WSW	1.89E-06	5.98E-07	2.64E-07	1.59E-07	1.10E-07	5.40E-08	2.06E-08	1.02E-08	6.48E-09	4.64E-09
W	2.37E-06	7.47E-07	3.28E-07	1.96E-07	1.35E-07	6.64E-08	2.52E-08	1.24E-08	7.87E-09	5.64E-09
WNW	2.04E-06	6.43E-07	2.82E-07	1.69E-07	1.16E-07	5.71E-08	2.16E-08	1.06E-08	6.77E-09	4.85E-09
NW	1.59E-06	4.98E-07	2.18E-07	1.30E-07	8.94E-08	4.38E-08	1.65E-08	8.10E-09	5.14E-09	3.68E-09
NNW	1.63E-06	5.14E-07	2.26E-07	1.35E-07	9.32E-08	4.59E-08	1.75E-08	8.65E-09	5.52E-09	3.96E-09
N	1.55E-06	4.88E-07	2.13E-07	1.27E-07	8.70E-08	4.25E-08	1.59E-08	7.78E-09	4.92E-09	3.51E-09
NNE	1.50E-06	4.75E-07	2.09E-07	1.26E-07	8.68E-08	4.27E-08	1.62E-08	8.00E-09	5.09E-09	3.65E-09
NE	1.45E-06	4.58E-07	2.02E-07	1.21E-07	8.38E-08	4.15E-08	1.59E-08	7.88E-09	5.03E-09	3.61E-09
ENE	1.43E-06	4.50E-07	1.97E-07	1.18E-07	8.09E-08	3.97E-08	1.50E-08	7.38E-09	4.69E-09	3.36E-09
E	2.24E-06	7.08E-07	3.11E-07	1.87E-07	1.29E-07	6.33E-08	2.41E-08	1.19E-08	7.57E-09	5.43E-09
ESE	2.32E-06	7.36E-07	3.26E-07	1.97E-07	1.36E-07	6.76E-08	2.60E-08	1.29E-08	8.25E-09	5.94E-09
SE	1.74E-06	5.51E-07	2.42E-07	1.45E-07	1.00E-07	4.93E-08	1.88E-08	9.26E-09	5.89E-09	4.22E-09
SSE	1.95E-06	6.18E-07	2.72E-07	1.63E-07	1.12E-07	5.53E-08	2.10E-08	1.04E-08	6.58E-09	4.71E+00

VENT AND BUILDING PARAMETERS:

RELEASE HEIGHT (METERS)	8.25	REP. WIND HEIGHT (METERS)	10
DIAMETER (METERS)	0.86	BUILDING HEIGHT (METERS)	6.8
EXIT VELOCITY (METERS)	0.15	BLDG.MIN.CRS.SEC.AREA (SQ.METERS)	163
		HEAT EMISSION RATE (CAL/SEC)	0

AT THE RELEASE HEIGHT:
VENT RELEASE MODE WIND SPEED (METERS/SEC)

ELEVATED	LESS THAN	0.03
MIXED	BETWEEN	.030 AND .150
GROUND LEVEL	ABOVE	0.15

/ AT THE MEASURED WIND HEIGHT (10.0 METERS):
/ VENT RELEASE MODE WIND SPEED (METERS/SEC)
/ STABLE CONDITIONS

ELEVATED	LESS THAN	0.03
MIXED	BETWEEN	.030 AND .150
GROUND LEVEL	ABOVE	0.15

WIND SPEED (METERS/SEC)
UNSTABLE/NEUTRAL CONDITIONS

LESS THAN	0.03
BETWEEN	.030 AND .150
ABOVE	0.15

Table 2-9 Annual Average UFTR Diffusion Coefficients based upon Crystal River Data

USNRC COMPUTER CODE - XOQDOQ, VERSION 2.0 RUN DATE: 10-24-2001 10:21
UFTR With Crystal River Data
uftr release point
NO DECAY, UNDEPLETED
ANNUAL AVERAGE CHI CHI/Q SEC/METER CUBED) DISTANCE IN MILES FROM THE SITE

SECTOR	0.25	0.5	0.75	1	1.5	2	2.5	3	3.5	4	4.5
S	1.57E-06	4.89E-07	2.41E-07	1.50E-07	7.97E-08	5.19E-08	3.75E-08	2.89E-08	2.32E-08	1.93E-08	1.64E-08
SSW	9.25E-06	2.84E-06	1.40E-06	8.71E-07	4.61E-07	2.99E-07	2.15E-07	1.65E-07	1.33E-07	1.10E-07	9.30E-08
SW	9.52E-06	2.91E-06	1.43E-06	8.90E-07	4.69E-07	3.03E-07	2.18E-07	1.67E-07	1.34E-07	1.11E-07	9.36E-08
WSW	1.88E-05	5.75E-06	2.84E-06	1.76E-06	9.28E-07	6.00E-07	4.31E-07	3.30E-07	2.65E-07	2.19E-07	1.85E-07
W	2.61E-05	8.02E-06	3.96E-06	2.46E-06	1.30E-06	8.42E-07	6.06E-07	4.66E-07	3.74E-07	3.10E-07	2.63E-07
WNW	1.83E-05	5.61E-06	2.77E-06	1.72E-06	9.09E-07	5.89E-07	4.24E-07	3.26E-07	2.61E-07	2.16E-07	1.84E-07
NW	1.16E-05	3.53E-06	1.74E-06	1.08E-06	5.69E-07	3.67E-07	2.64E-07	2.02E-07	1.62E-07	1.33E-07	1.13E-07
NNW	7.94E-06	2.40E-06	1.19E-06	7.34E-07	3.85E-07	2.48E-07	1.78E-07	1.36E-07	1.08E-07	8.94E-08	7.55E-08
N	5.81E-06	1.75E-06	8.65E-07	5.34E-07	2.78E-07	1.78E-07	1.27E-07	9.65E-08	7.68E-08	6.31E-08	5.31E-08
NNE	4.86E-06	1.46E-06	7.16E-07	4.43E-07	2.32E-07	1.49E-07	1.06E-07	8.10E-08	6.46E-08	5.32E-08	4.48E-08
NE	1.09E-05	3.26E-06	1.61E-06	9.92E-07	5.21E-07	3.35E-07	2.40E-07	1.83E-07	1.47E-07	1.21E-07	1.02E-07
ENE	6.24E-06	1.79E-06	8.72E-07	5.35E-07	2.78E-07	1.78E-07	1.26E-07	9.58E-08	7.61E-08	6.24E-08	5.25E-08
E	6.61E-06	1.89E-06	9.21E-07	5.64E-07	2.94E-07	1.88E-07	1.33E-07	1.01E-07	8.05E-08	6.61E-08	5.56E-08
ESE	7.38E-06	2.15E-06	1.06E-06	6.48E-07	3.36E-07	2.14E-07	1.52E-07	1.15E-07	9.14E-08	7.49E-08	6.29E-08
SE	4.96E-06	1.48E-06	7.28E-07	4.49E-07	2.33E-07	1.49E-07	1.06E-07	8.01E-08	6.36E-08	5.21E-08	4.38E-08
SSE	2.26E-06	6.76E-07	3.34E-07	2.06E-07	1.08E-07	6.87E-08	4.89E-08	3.72E-08	2.96E-08	2.43E-08	2.04E-08

ANNUAL AVERAGE CHI CHI/Q SEC/METER CUBED) DISTANCE IN MILES FROM THE SITE

SECTOR	5	7.5	10	15	20	25	30	35	40	45	50
S	1.42E-08	8.19E-09	5.59E-09	3.29E-09	2.27E-09	1.71E-09	1.36E-09	1.12E-09	9.45E-10	8.16E-10	7.16E-10
SSW	8.03E-08	4.60E-08	3.12E-08	1.82E-08	1.25E-08	9.36E-09	7.40E-09	6.07E-09	5.12E-09	4.41E-09	3.85E-09
SW	8.07E-08	4.61E-08	3.12E-08	1.81E-08	1.24E-08	9.26E-09	7.31E-09	6.00E-09	5.05E-09	4.35E-09	3.80E-09
WSW	1.60E-07	9.13E-08	6.18E-08	3.59E-08	2.46E-08	1.84E-08	1.45E-08	1.19E-08	1.00E-08	8.61E-09	7.53E-09
W	2.27E-07	1.30E-07	8.83E-08	5.16E-08	3.55E-08	2.66E-08	2.10E-08	1.73E-08	1.46E-08	1.25E-08	1.10E-08
WNW	1.59E-07	9.09E-08	6.17E-08	3.60E-08	2.47E-08	1.85E-08	1.46E-08	1.20E-08	1.01E-08	8.71E-09	7.62E-09
NW	9.73E-08	5.54E-08	3.74E-08	2.16E-08	1.47E-08	1.10E-08	8.65E-09	7.07E-09	5.95E-09	5.11E-09	4.46E-09
NNW	6.50E-08	3.68E-08	2.47E-08	1.42E-08	9.66E-09	7.17E-09	5.63E-09	4.59E-09	3.86E-09	3.30E-09	2.88E-09
N	4.56E-08	2.55E-08	1.70E-08	9.69E-09	6.53E-09	4.82E-09	3.77E-09	3.06E-09	2.56E-09	2.19E-09	1.90E-09
NNE	3.85E-08	2.17E-08	1.45E-08	8.33E-09	5.64E-09	4.18E-09	3.28E-09	2.67E-09	2.24E-09	1.92E-09	1.67E-09
NE	8.79E-08	4.98E-08	3.35E-08	1.94E-08	1.32E-08	9.80E-09	7.71E-09	6.30E-09	5.29E-09	4.54E-09	3.96E-09
ENE	4.50E-08	2.52E-08	1.68E-08	9.55E-09	6.45E-09	4.77E-09	3.73E-09	3.04E-09	2.54E-09	2.18E-09	1.89E-09
E	4.77E-08	2.66E-08	1.77E-08	1.01E-08	6.79E-09	5.01E-09	3.92E-09	3.18E-09	2.66E-09	2.28E-09	1.98E-09
ESE	5.39E-08	2.99E-08	1.98E-08	1.12E-08	7.51E-09	5.52E-09	4.30E-09	3.49E-09	2.91E-09	2.48E-09	2.15E-09
SE	3.75E-08	2.09E-08	1.39E-08	7.83E-09	5.25E-09	3.86E-09	3.01E-09	2.44E-09	2.04E-09	1.74E-09	1.51E-09
SSE	1.75E-08	9.79E-09	6.51E-09	3.70E-09	2.49E-09	1.83E-09	1.43E-09	1.16E-09	9.68E-10	8.26E-10	7.17E-10

uftr release point
NO DECAY, UNDEPLETED
CHI Q (SEC METER CUBED) FOR EACH SEGMENT
SEGMENT BOUNDARIES IN MILES FROM THE SITE

DIRECTION FROM SITE	.5-1	1.-2.	2.-3.	3.-4.	4.-5	5.-10	10.-20	20-30	30-40	40-50
S	2.56E-07	8.30E-08	3.79E-08	2.33E-08	1.64E-08	8.37E-09	3.35E-09	1.72E-09	1.12E-09	8.17E-10
SSW	1.49E-06	4.80E-07	2.17E-07	1.33E-07	9.33E-08	4.71E-08	1.86E-08	9.41E-09	6.09E-09	4.41E-09
SW	1.52E-06	4.89E-07	2.20E-07	1.34E-07	9.39E-08	4.71E-08	1.85E-08	9.32E-09	6.01E-09	4.36E-09
WSW	3.00E-06	9.66E-07	4.36E-07	2.66E-07	1.86E-07	9.34E-08	3.66E-08	1.85E-08	1.19E-08	8.62E-09
W	4.19E-06	1.35E-06	6.13E-07	3.76E-07	2.63E-07	1.33E-07	5.26E-08	2.67E-08	1.73E-08	1.26E-08
WNW	2.94E-06	9.47E-07	4.29E-07	2.63E-07	1.84E-07	9.29E-08	3.67E-08	1.86E-08	1.20E-08	8.72E-09
NW	1.85E-06	5.93E-07	2.66E-07	1.62E-07	1.13E-07	5.67E-08	2.21E-08	1.11E-08	7.10E-09	5.12E-09
NNW	1.26E-06	4.02E-07	1.80E-07	1.09E-07	7.57E-08	3.77E-08	1.45E-08	7.22E-09	4.61E-09	3.31E-09
N	9.14E-07	2.91E-07	1.28E-07	7.72E-08	5.33E-08	2.62E-08	9.92E-09	4.86E-09	3.07E-09	2.19E-09
NNE	7.60E-07	2.42E-07	1.08E-07	6.49E-08	4.50E-08	2.23E-08	8.52E-09	4.21E-09	2.68E-09	1.92E-09
NE	1.70E-06	5.43E-07	2.43E-07	1.47E-07	1.02E-07	5.11E-08	1.98E-08	9.86E-09	6.31E-09	4.54E-09
ENE	9.27E-07	2.91E-07	1.28E-07	7.65E-08	5.27E-08	2.59E-08	9.78E-09	4.80E-09	3.05E-09	2.18E-09
E	9.78E-07	3.07E-07	1.35E-07	8.10E-08	5.58E-08	2.74E-08	1.03E-08	5.05E-09	3.19E-09	2.28E-09
ESE	1.12E-06	3.51E-07	1.54E-07	9.19E-08	6.31E-08	3.08E-08	1.15E-08	5.56E-09	3.50E-09	2.49E-09
SE	7.70E-07	2.44E-07	1.07E-07	6.39E-08	4.40E-08	2.15E-08	8.02E-09	3.89E-09	2.45E-09	1.74E-09
SSE	3.53E-07	1.12E-07	4.95E-08	2.97E-08	2.05E-08	1.01E-08	3.78E-09	1.84E-09	1.16E-09	8.28E-10

VENT AND BUILDING PARAMETERS:

RELEASE HEIGHT (METERS)	8.25	REP. WIND HEIGHT (METERS)	10
DIAMETER (METERS)	0.86	BUILDING HEIGHT (METERS)	6.8
EXIT VELOCITY (METERS)	0.15	BLDG.MIN.CRS.SEC.AREA (SQ.METERS)	163
		HEAT EMISSION RATE (CAL/SEC)	0

AT THE RELEASE HEIGHT:
VENT RELEASE MODE WIND SPEED (METERS/SEC)

ELEVATED	LESS THAN	0.03
MIXED	BETWEEN	.030 AND .150
GROUND LEVEL	ABOVE	0.15

/ AT THE MEASURED WIND HEIGHT (10.0 METERS):
/ VENT RELEASE MODE WIND SPEED (METERS/SEC)
/ STABLE CONDITIONS

/ ELEVATED	LESS THAN	0.03
/ MIXED	BETWEEN	.030 AND .150
/ GROUND LEVEL	ABOVE	0.15

WIND SPEED (METERS/SEC)
UNSTABLE/NEUTRAL CONDITIONS

LESS THAN	0.03
BETWEEN	.030 AND .150
ABOVE	0.15

Table 2-10 Design basis Accident Diffusion Coefficients With Site Specific Meteorology

Vent Distance (miles)	Period	Duration	Worst Sector	Diffusion Coefficient (sec./m^3)
0.1	0-2 hours	2 hours	S	1.3 E-03
	2-24 hours	22 hours	S	5.1 E-04
	1-4 days	3 days	ESE	3.4 E-04
	4-30 days	26 days	ESE	1.6 E-04
0.2	0-2 hours	2 hours	NNE	4.2 E-04
	2-24 hours	22 hours	NNE	1.6 E-04
	1-4 days	3 days	S	1.0 E-04
	4-30 days	26 days	ESE	5.2 E-04
0.3	0-2 hours	2 hours	WSW	1.9 E -04
	2-24 hours	22 hours	S	7.8 E-05
	1-4 days	3 days	S	5.0 E-05
	4-30 days	26 days	ESE	2.6 E-05
0.4	0-2 hours	2 hours	S	1.2 E-04
	2-24 hours	22 hours	S	4.9 E-05
	1-4 days	3 days	ESE	3.2 E-05
	4-30 days	26 days	ESE	1.6 E-05
0.5	0-2 hours	2 hours	S	8.4 E-05
	2-24 hours	22 hours	S	3.4 E-05
	1-4 days	3 days	ESE	2.2 E-05
	4-30 days	26 days	ESE	1.1 E-05

Table 2-11 Design Basis Accident Diffusion Coefficients with NRC Standard Meteorology

DISTANCE	DIFFUSION COEFFICIENTS (sec/m^3)			
(miles)	0 – 8 hours	8 – 24 hours	1 - 4 days	4 - 30 days
0.1	1.0 E -02	3.0 E-03	1.3 E-03	3.5 E-04
0.2	4.5 E-03	1.0 E-03	5.6 E-04	8.5 E-05
0.3	2.2 E-03	6.4 E-04	2.7 E-04	4.4 E-05
0.4	1.4 E-03	4.0 E-04	1.0 E-04	2.5 E-05
0.5	8.0 E-04	2.6 E-04	7.0 E-05	1.6 E-05

Table 2-12 Test Boring Data for the UFTR

Hole No 1 Sheet of Sheets

Location: Between Reid. Lab and E&I Building

Started Completed 5/10/57

Ground Water Depth 5'

Hammer Wt. 300 lbs Drop 18" Sampler Size 2-1/2

Depth	Number	Blows	Description
5	1	4	Medium soft grey and brown sandy clay
10	2	13	Stiff greyish sandy clay
15	3	28	Stiff blue and grey sandy
20	4	57	Stiff tan sandy clay with rock frag
25	5	100&core	Stiff blue rocky clay
30	6	Core	Stiff blue clay with sandy layer
35	7	45	Stiff blue rocky clay y
40	8	Core	Stiff blue rocky clay
45	9	63	Stiff blue rocky clay

Bottom Hole 45' No Cavity

Table 2-13 Test Boring Data for the UFTR

Hole No 2 Sheet ..... of ..... Sheets

Location: Between Reid. Lab and E&I Building

Started ..... Completed 5/10/57

Ground Water Depth 5'

Hammer Wt. 300 lbs Drop 18" Sampler Size 2-1/2

Depth	Number	Blows	Description
5	1	3	Soft grayish sandy clay and Phosphate
10	2	8	Medium greyish sandy clay
15	3	22	Stiff light blue and grey sandy clay
20	4	35	Stiff sandy clay and Phosphate
25	5	57	Stiff grey sandy clay with rock frag.
30	6	47	Stiff blue and grey sandy clay
35	7	core	Stiff blue rocky clay

Bottom Hole 37' No Cavity

Table 2-14 Test Boring Data for the UFTR

Hole No 3 Sheet of Sheets

Location: Between Reid. Lab and E&I Building

Started Completed 5/10/57

Ground Water Depth 5'

Hammer Wt. 300 lbs Drop 18" Sampler Size 2-1/2

Depth	Number	Blows	Description
5	1	8	Medium brown sandy clay
10	2	13	Stiff brown sandy clay
15	3	7	Soft grey sandy clay with pebble
20	4	7	Soft brown and grey sandy silty clay
25	5	20	Stiff grey sandy clay with phosphate
30	6	32	Stiff grey sandy clay with phosphate
35	7		Stiff grey sandy rocky clay
40	8	Core	Stiff grey sandy rocky clay

Bottom Hole 40' No Cavity

Table 2-15 Test Boring Data for the UFTR

Hole No 4 Sheet of Sheets

Location: Between Reid. Lab and E&I Building

Started Completed 5/10/57

Ground Water Depth 5'

Hammer Wt. 300 lbs Drop 18" Sampler Size 2-1/2

Depth	Number	Blows	Description
5	1	8	Medium grey sandy clay with pebble
10	2	6	Medium brown and grey sandy clay and pebble
15	3	27	Stiff greyish sandy clay
20	4	25	Stiff greyish sandy clay
25	5	37	Medium tan silty sandy clay and rock frag.
30	6	20	Stiff grey sandy clay with rock frag.
35	7	15	Stiff blue rocky clay

Bottom Hole 40' No Cavity

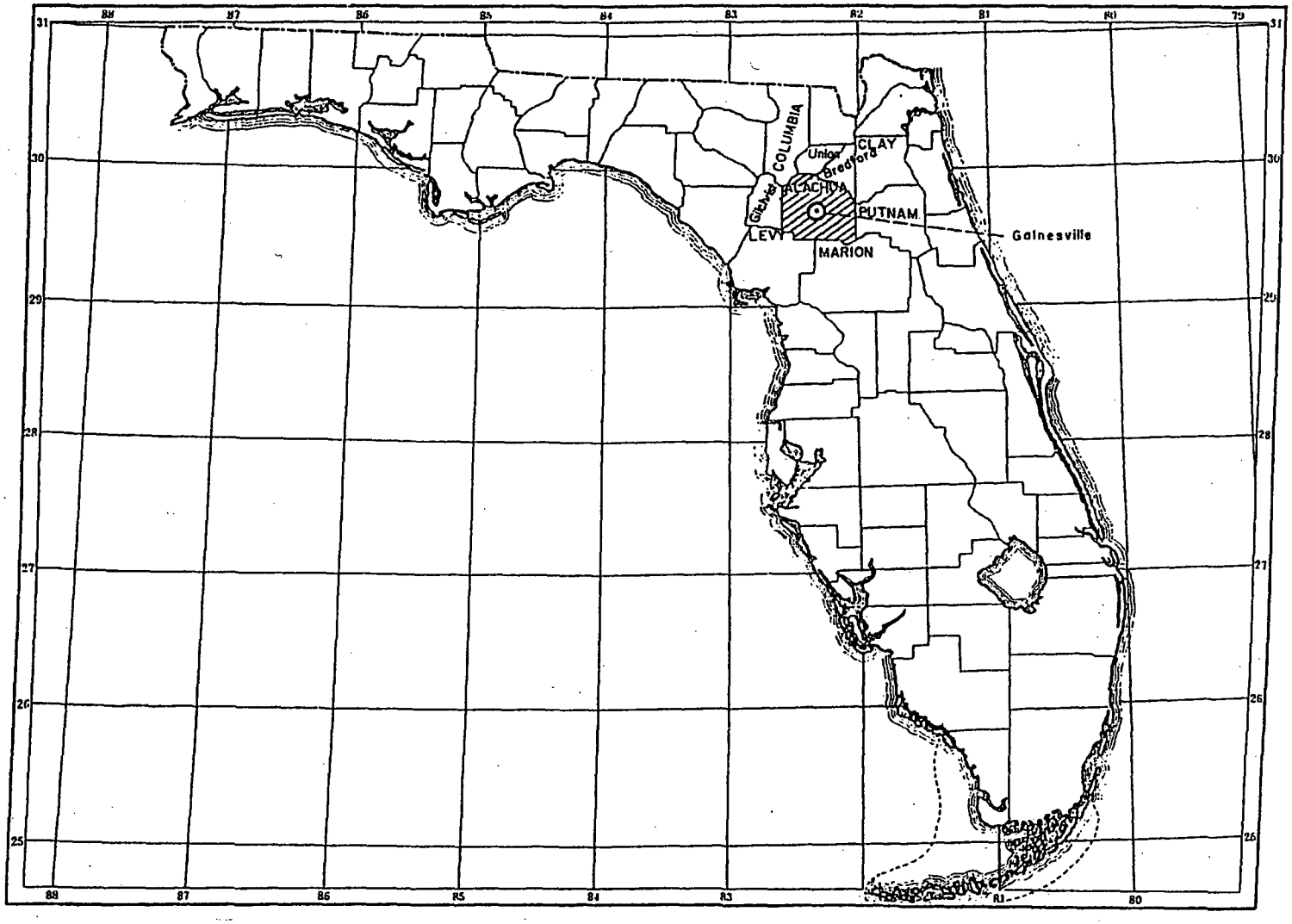

Figure 2-1 Relative Geographic Location of Alachua County and Gainesville in the State of Florida

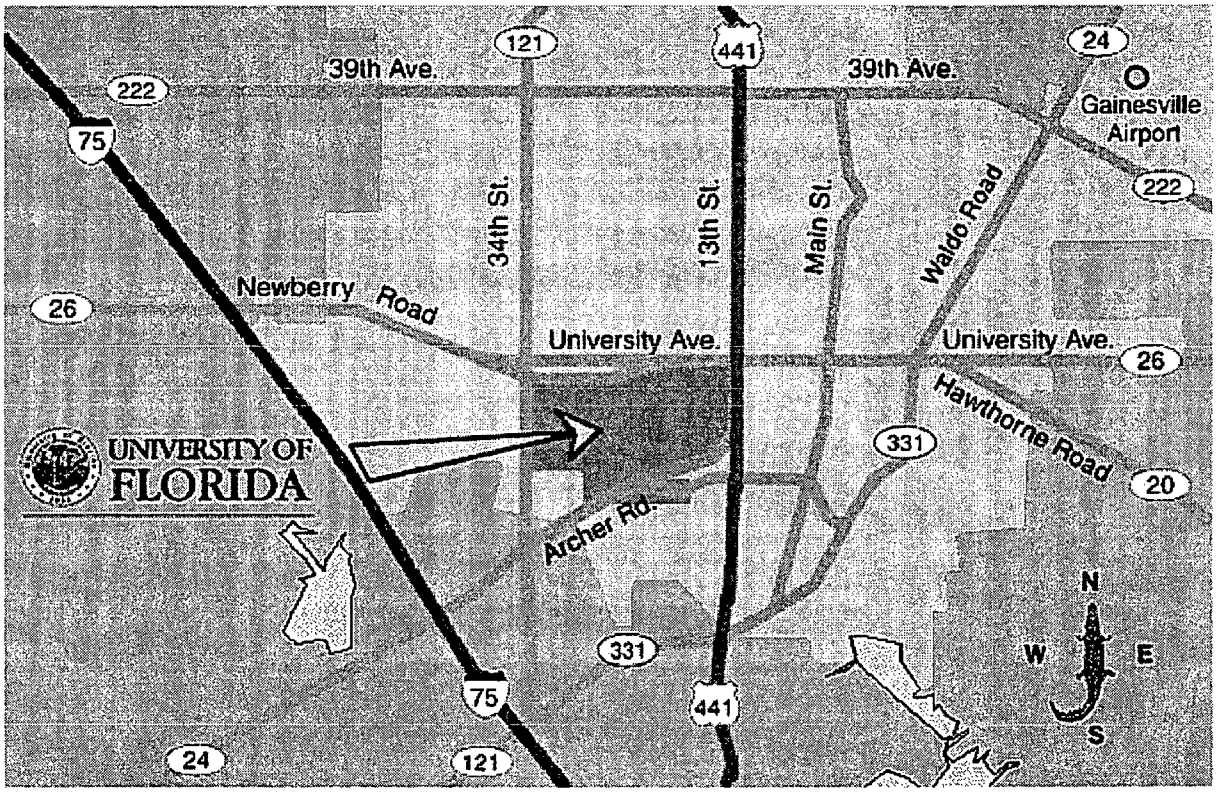

Figure 2-2 Map of the Greater Gainesville Area Showing Placement of University of Florida and Major Landmarks

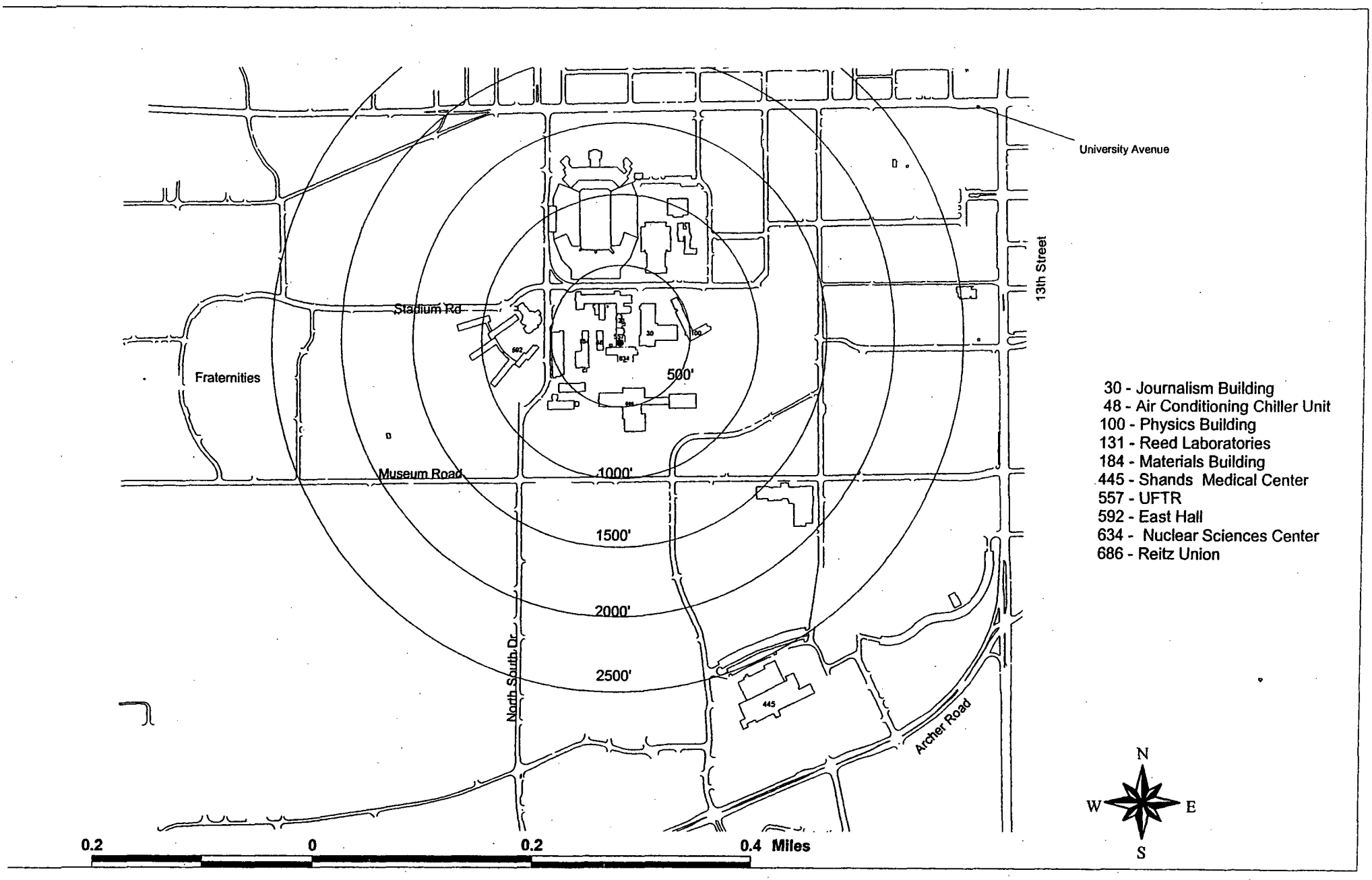

Figure 2-3. UFTR Building Placement on University of Florida Campus with respect to Major Campus Arteries and Buildings.

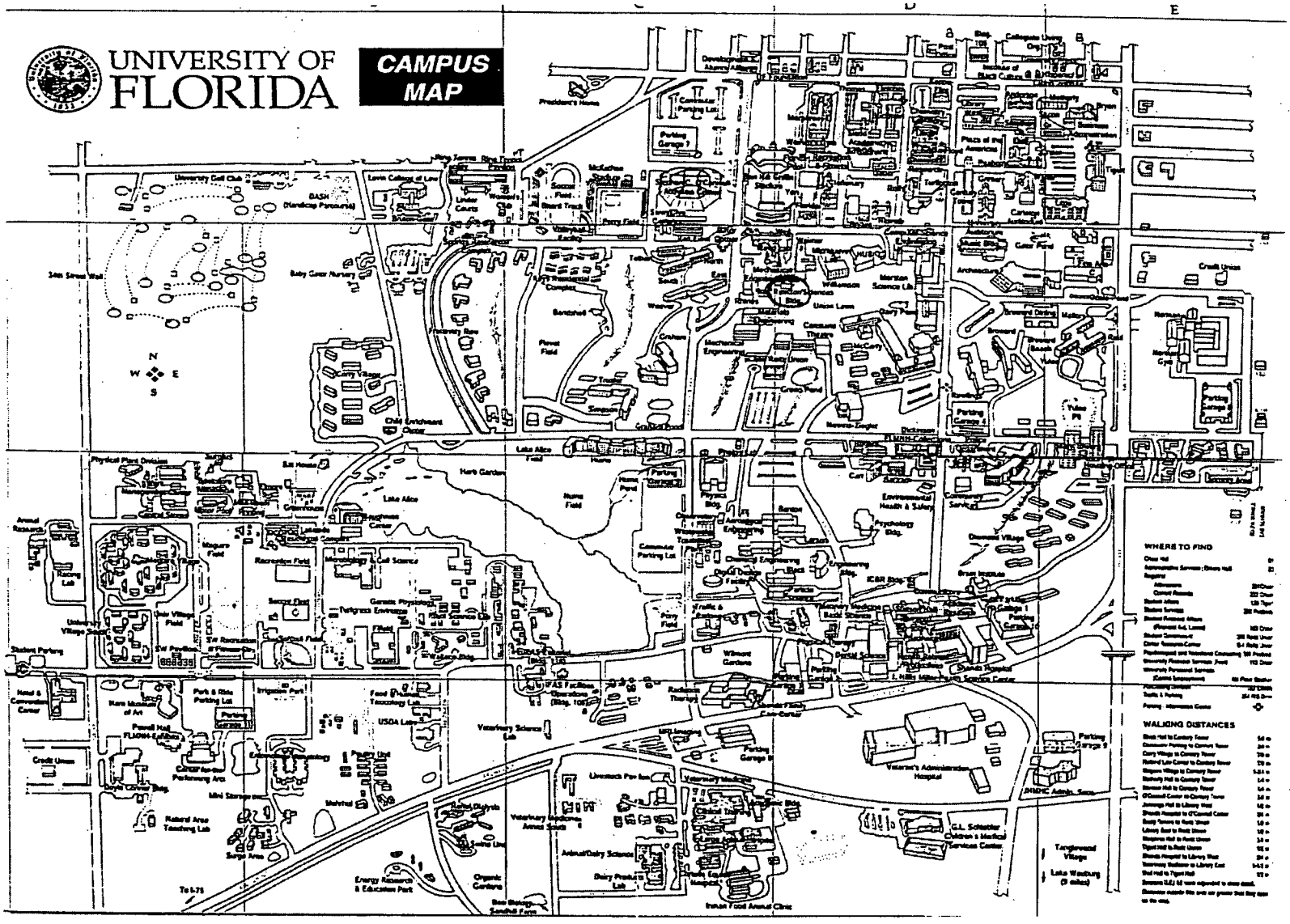

Figure 2-4 University of Florida Campus Map with Building Locations, Primary Landmarks and Boundaries

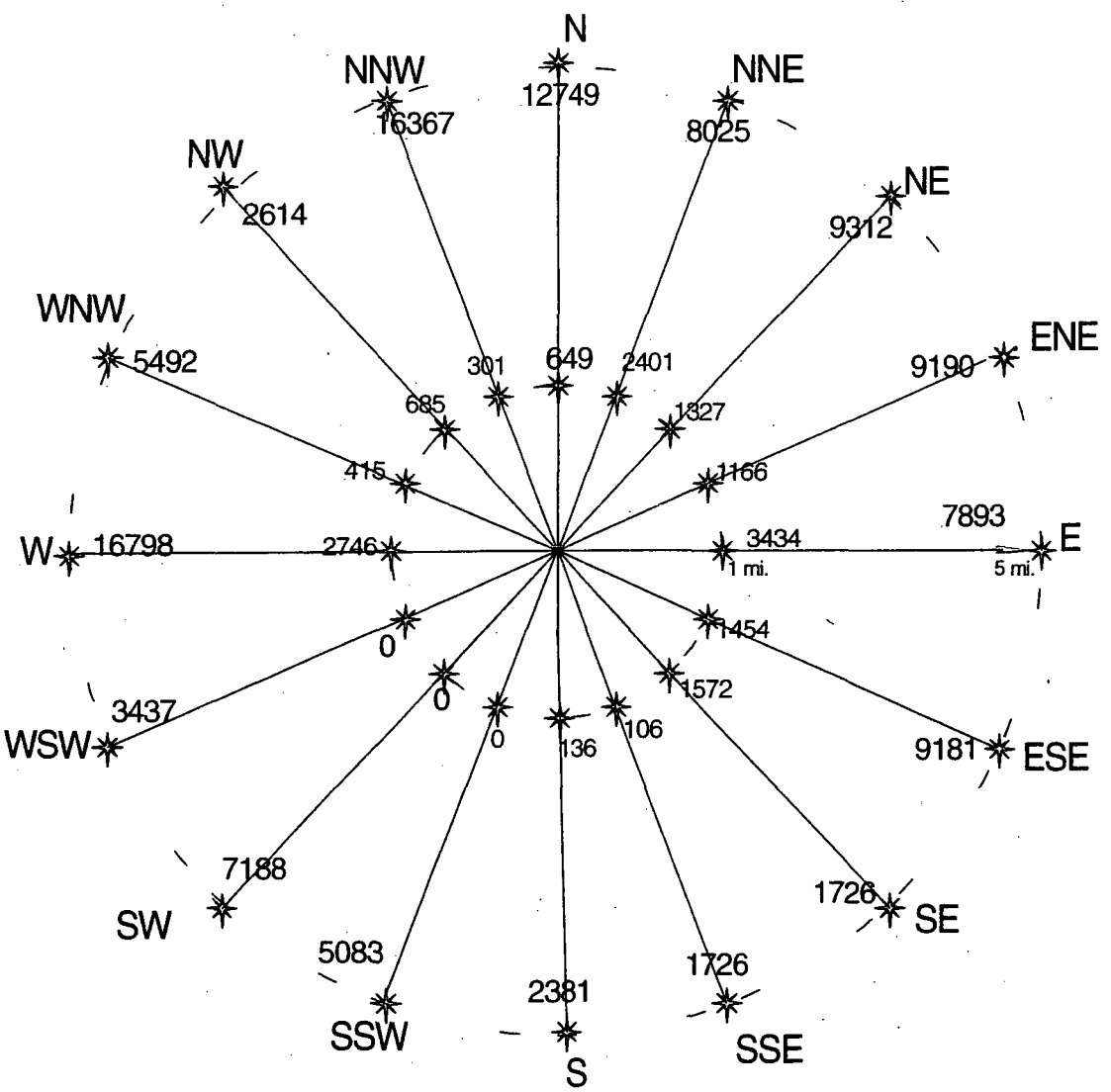

Figure 2-5 **Population Distribution with a 1 mile and 5 miles radius around UFTR, based upon 2000 Census Data. The greater Gainesville population was conservatively assumed to be concentrated within a 5 mile radius around UFTR.**

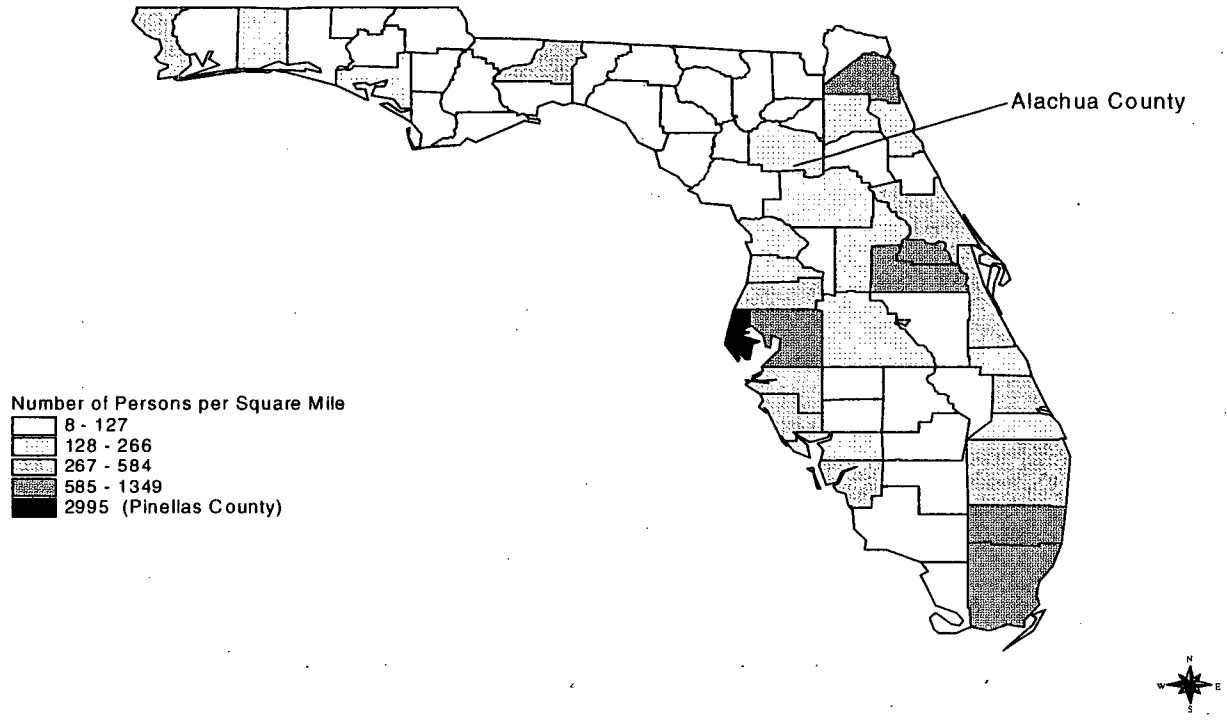

Figure 2-6 Florida Population Density by County for 2000

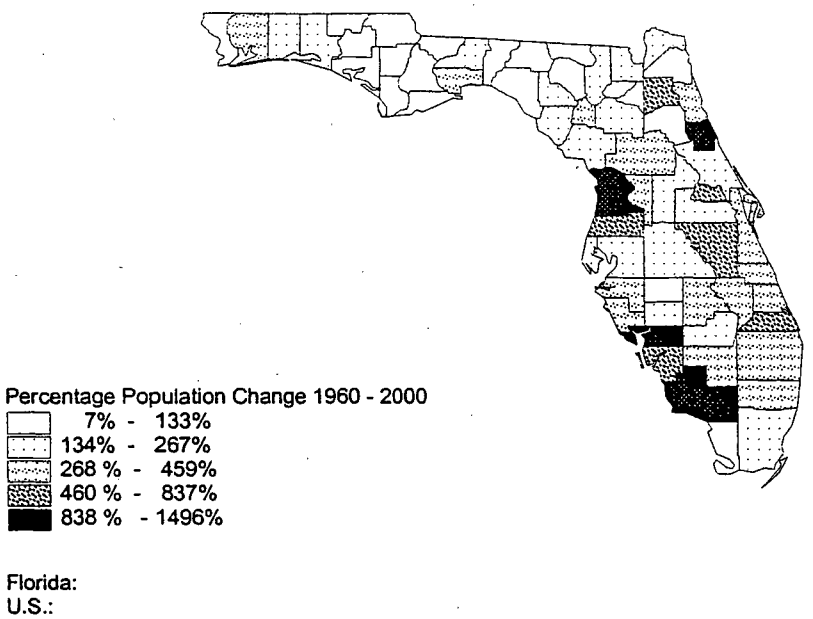

Figure 2-7A. Florida Percentage Population Change by County from 1960 to 2000

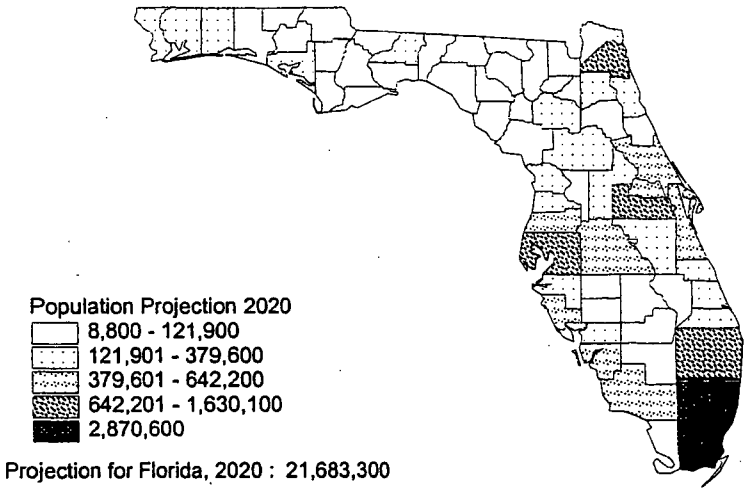

Figure 2-7B. Florida Population Projection by County for 2020

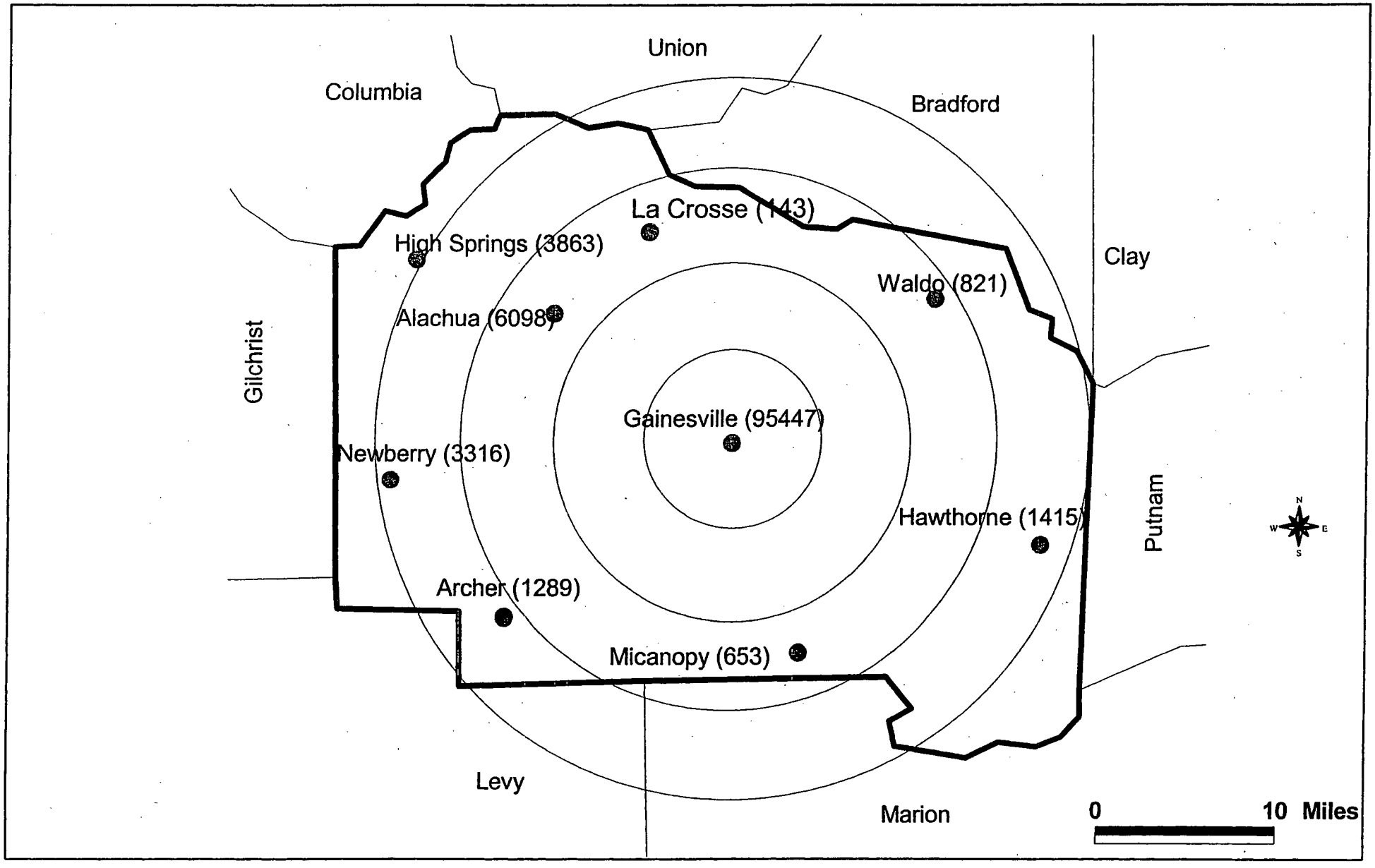

Figure 2-8. Population Concentration and Locations (2000 Census) in Alachua County with Concentric Circles at Five-Mile Interval

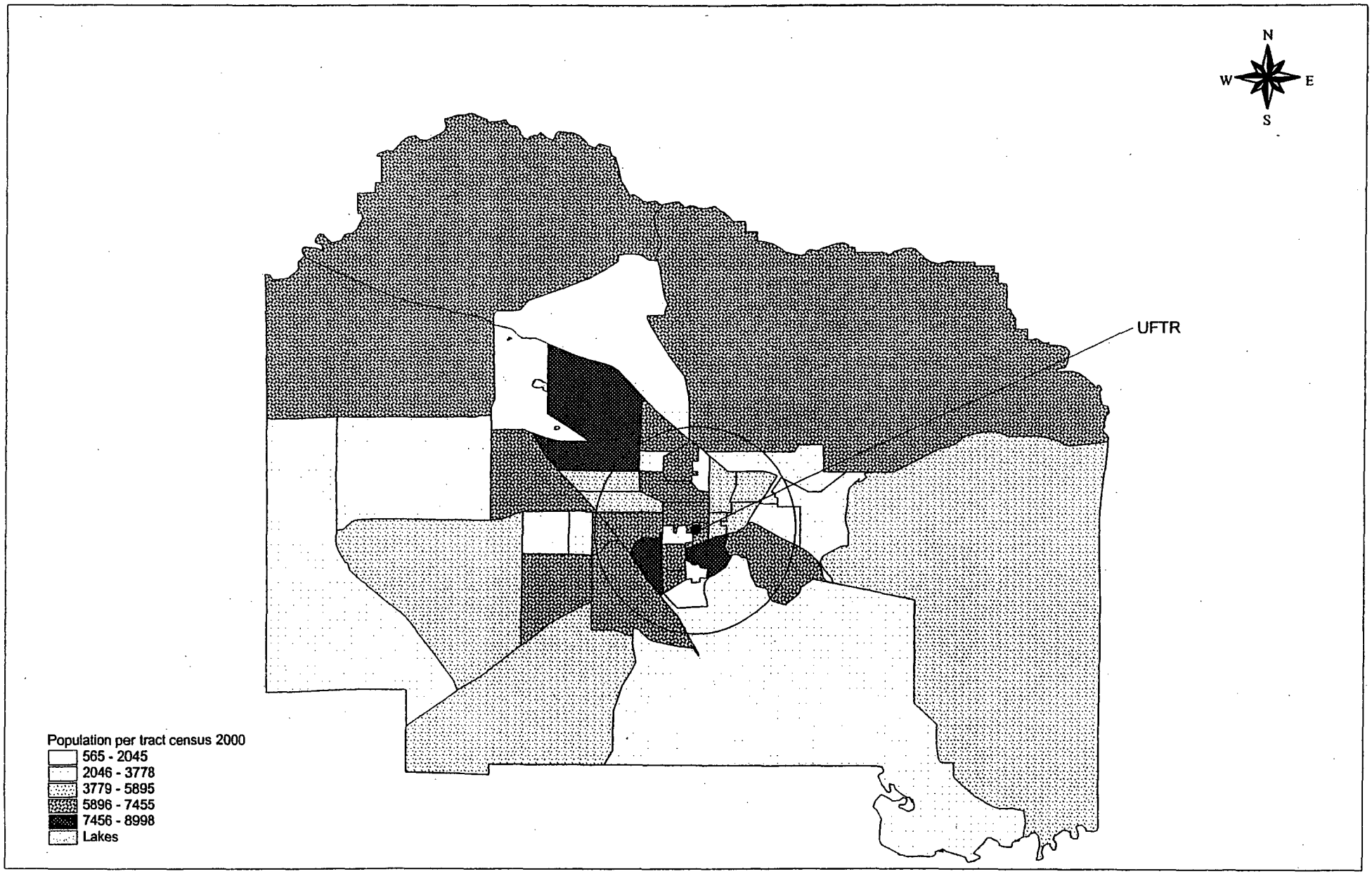

Figure 2-9 Alachua County population per tract (Census 2000) and 5-mile circle around UFTR[1]

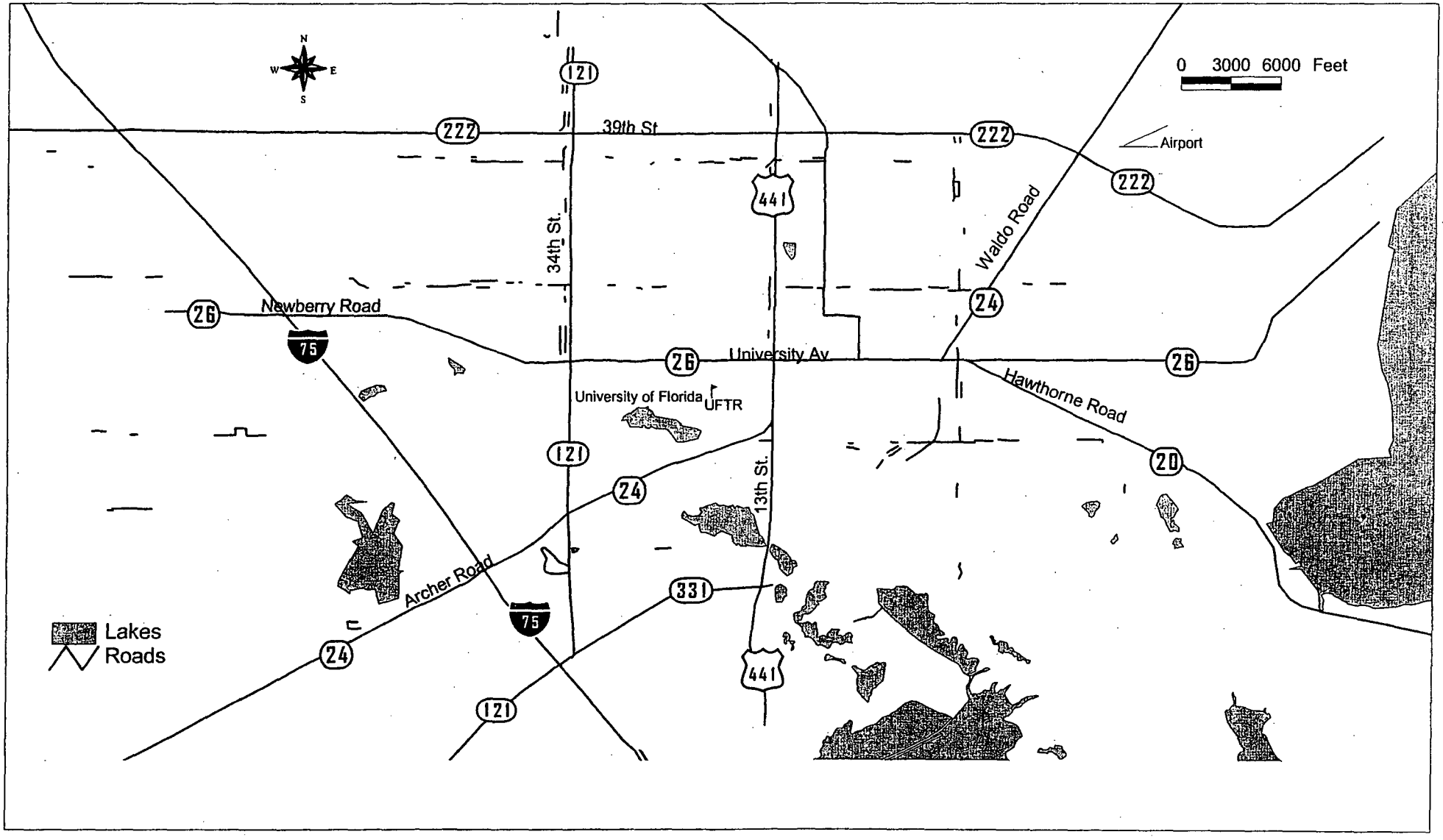

Figure 2-10 Map of the main traffic arteries around the University of Florida Campus

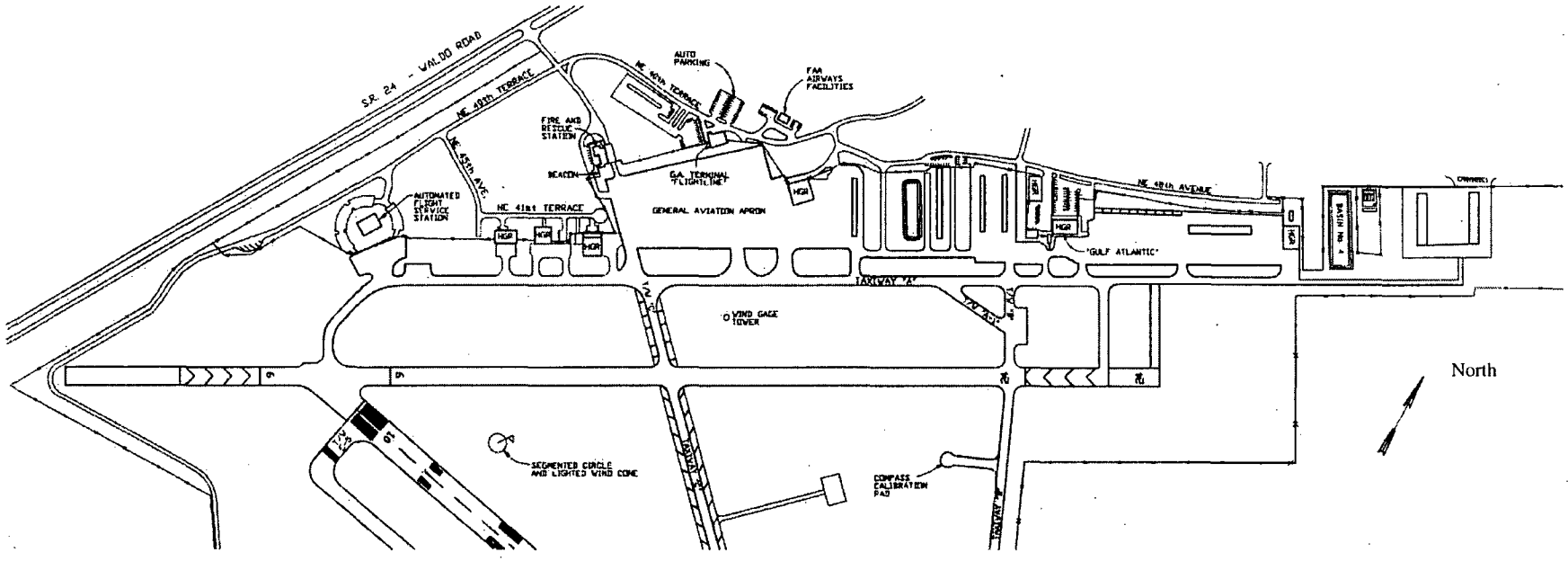

Figure 2-11 Location and Orientation of Gainesville Regional Airport Runways.

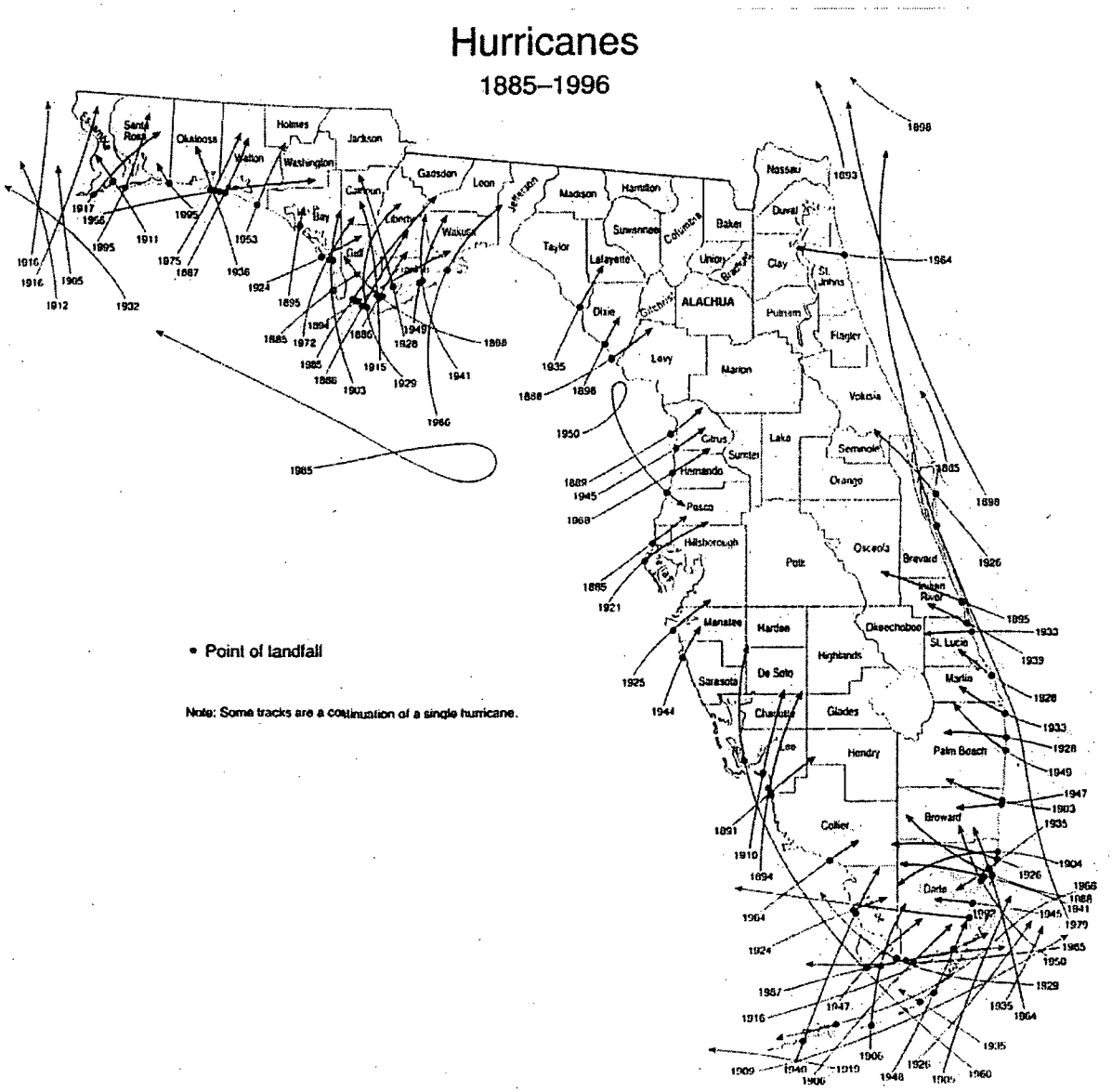

Figure 2-12 Historical Hurricanes Points of Entry for the State of Florida. [8]

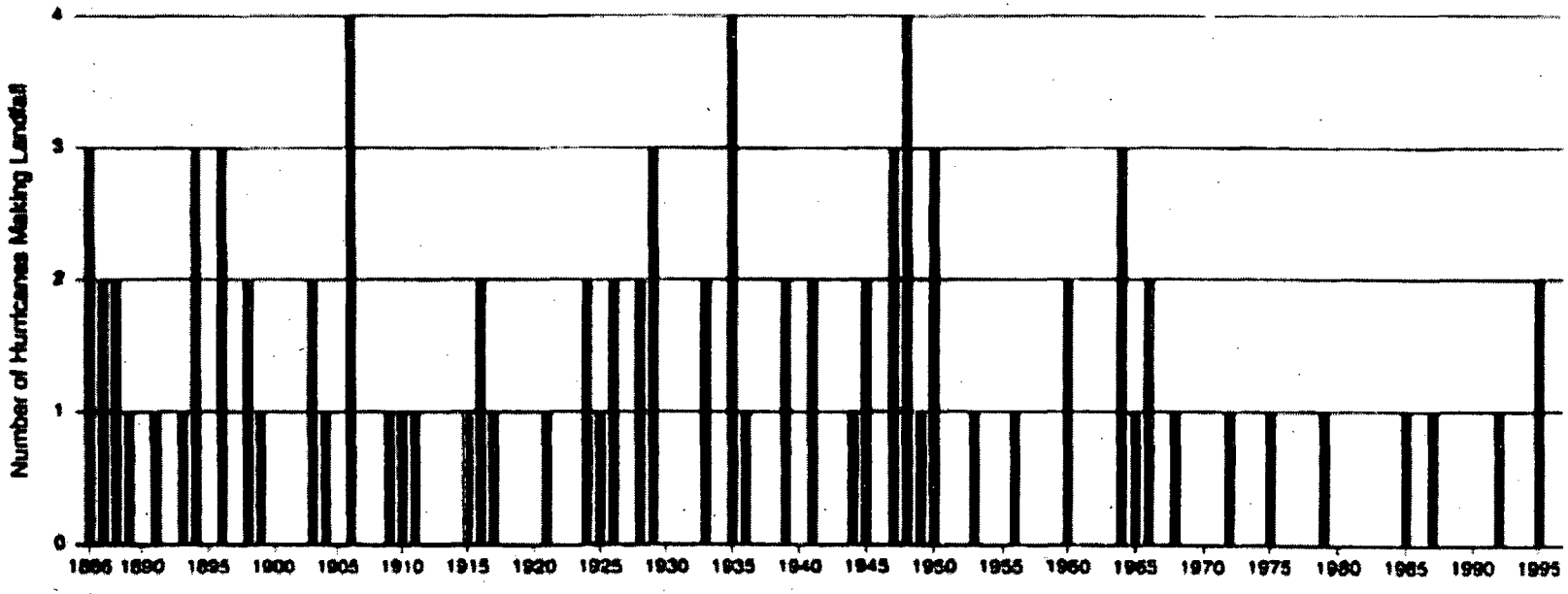

Figure 2-13 Number of hurricanes making landfall in Florida per year [8].

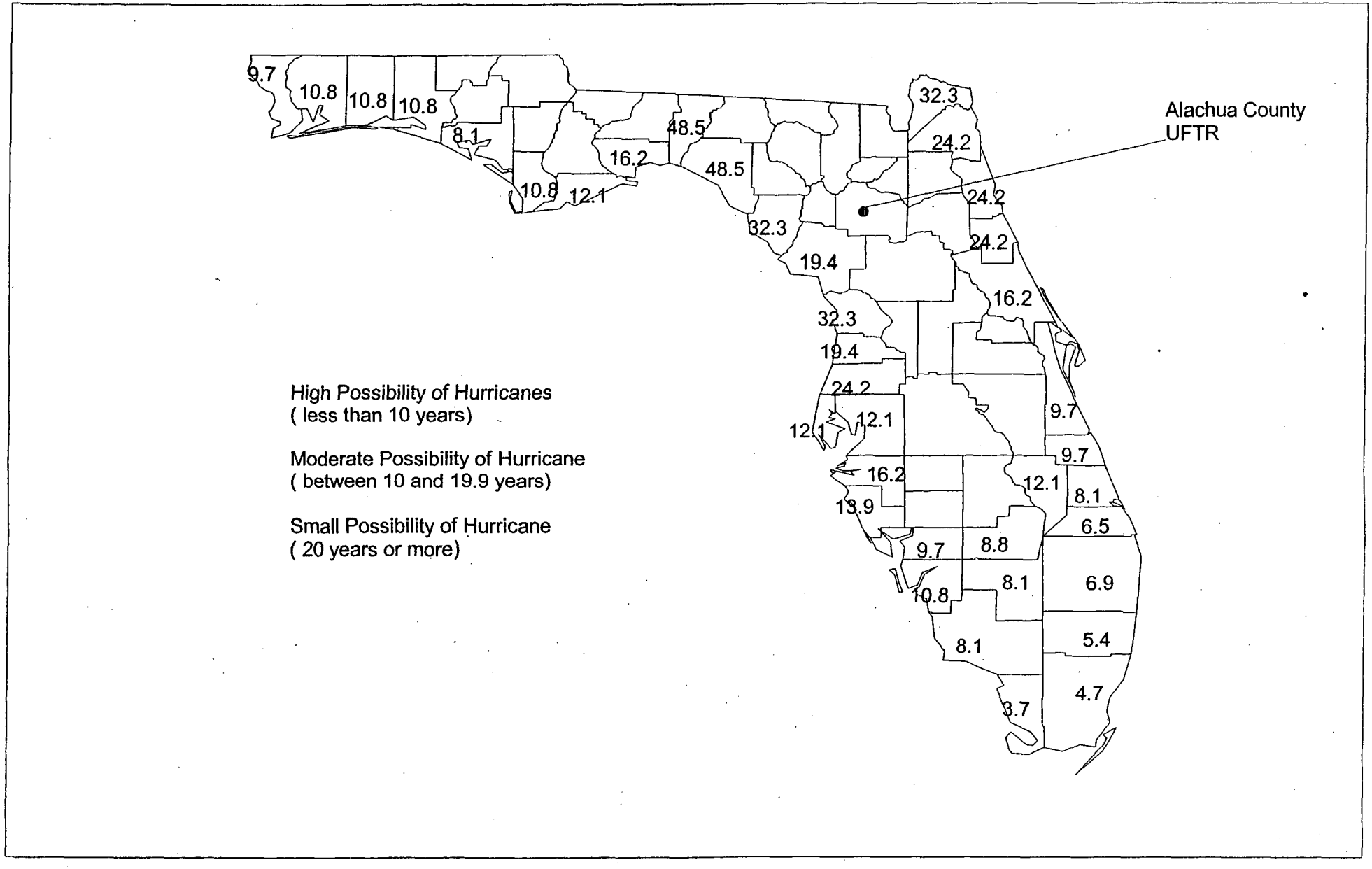

Figure 2-14 Florida Hurricane return time (years), based on data taken from hurricanes that made landfall in Florida from 1900 to 1997 [9].

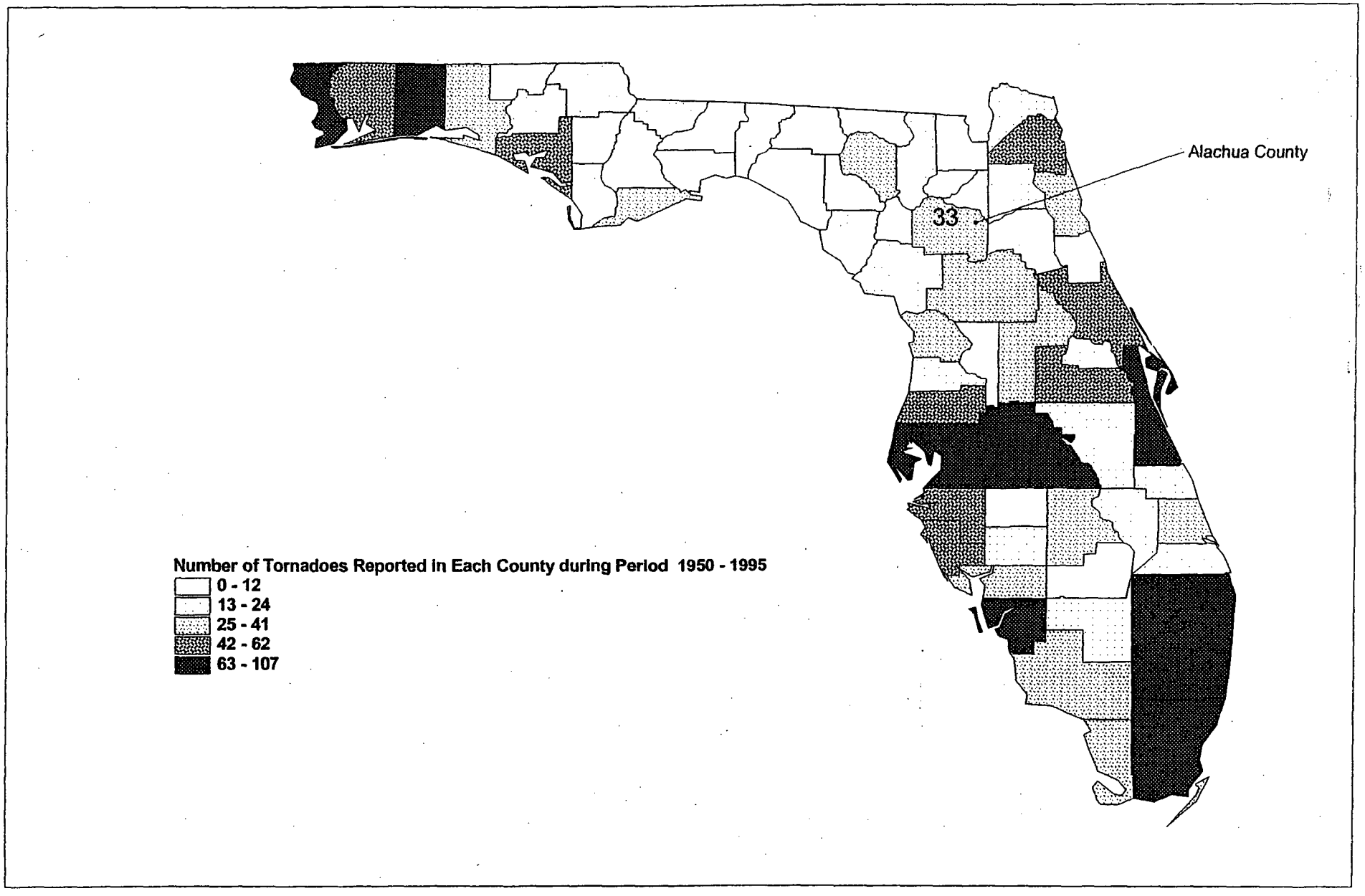

Figure 2-15 Tornado Occurrences by Florida County for Years 1950 - 1995 [11].

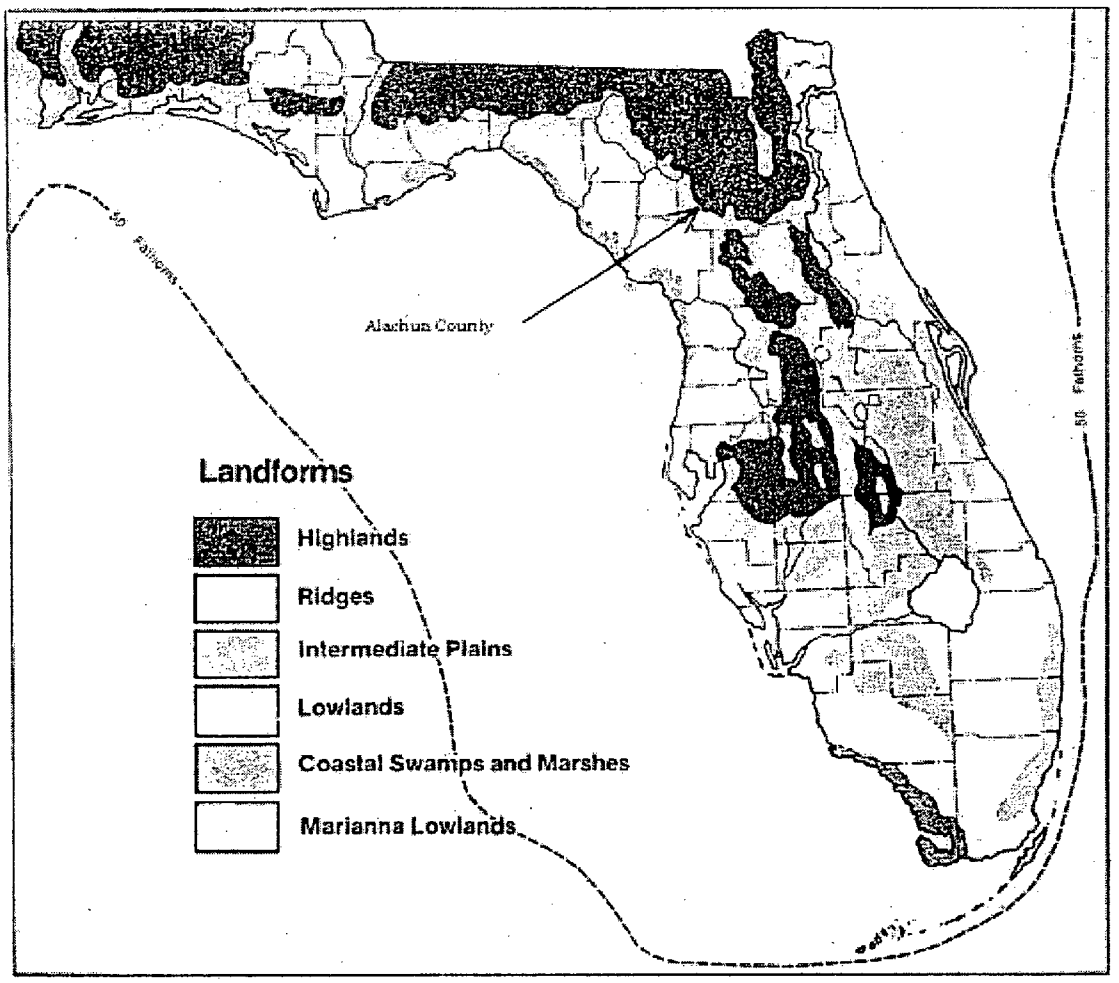

Figure 2-16 Topological Map of Florida.

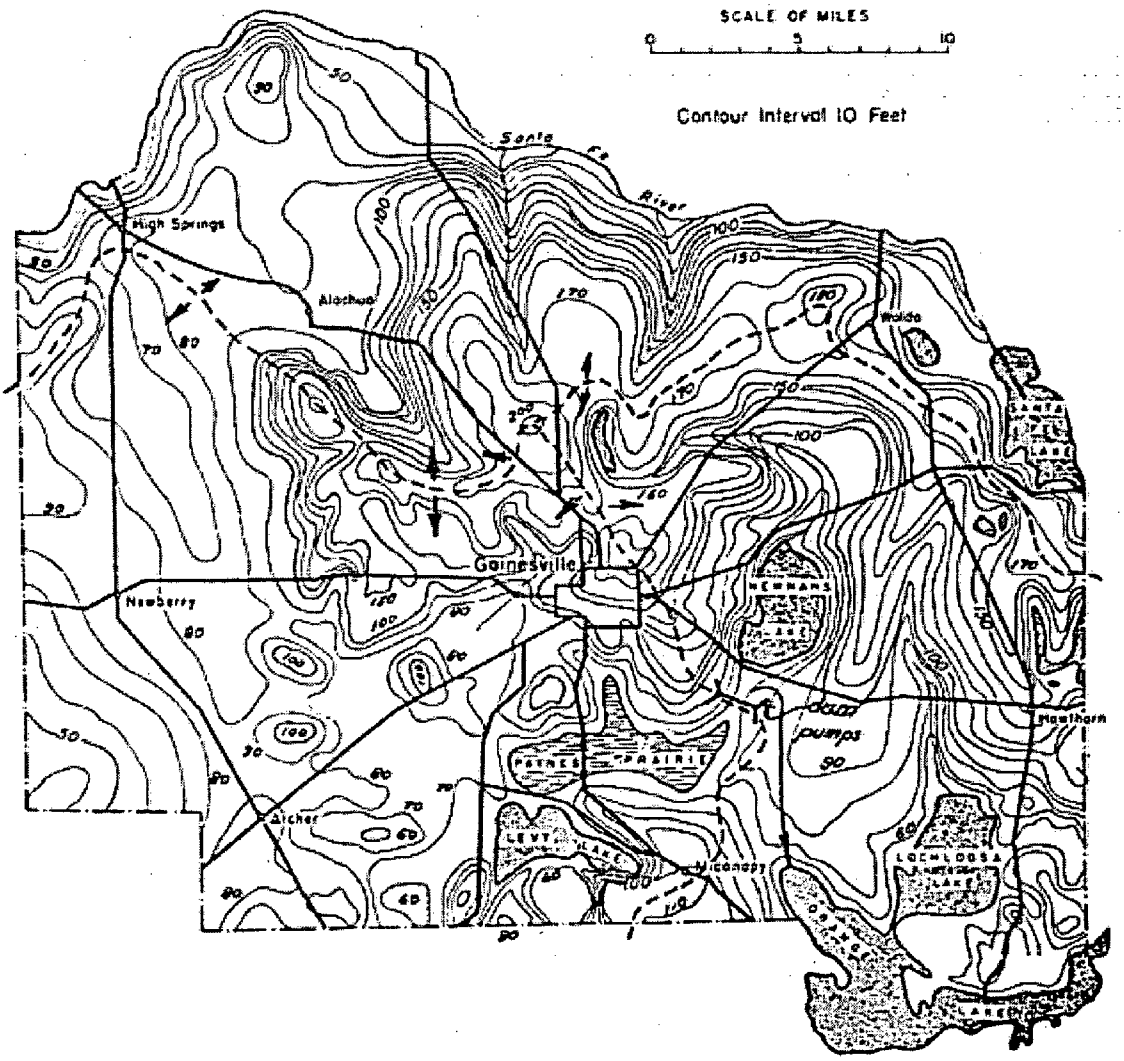

Figure 2-17 Generalized Topographical Map of Alachua County, Florida.

UPPER ELEVATION

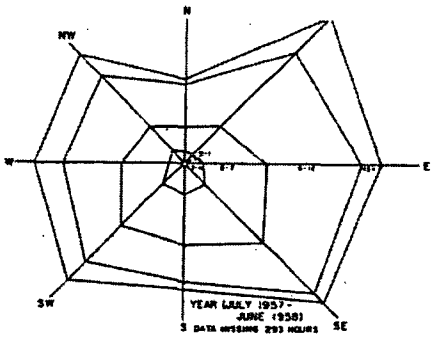

LOWER ELEVATION

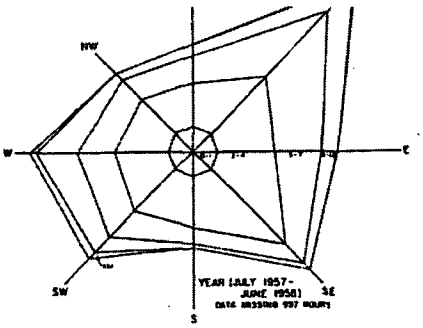

Figure 2-18 Original UFTR Annual Summary of Wind Data Showing Monthly Totals Averaged over the year and used in Original UFTR Hazards Summary.

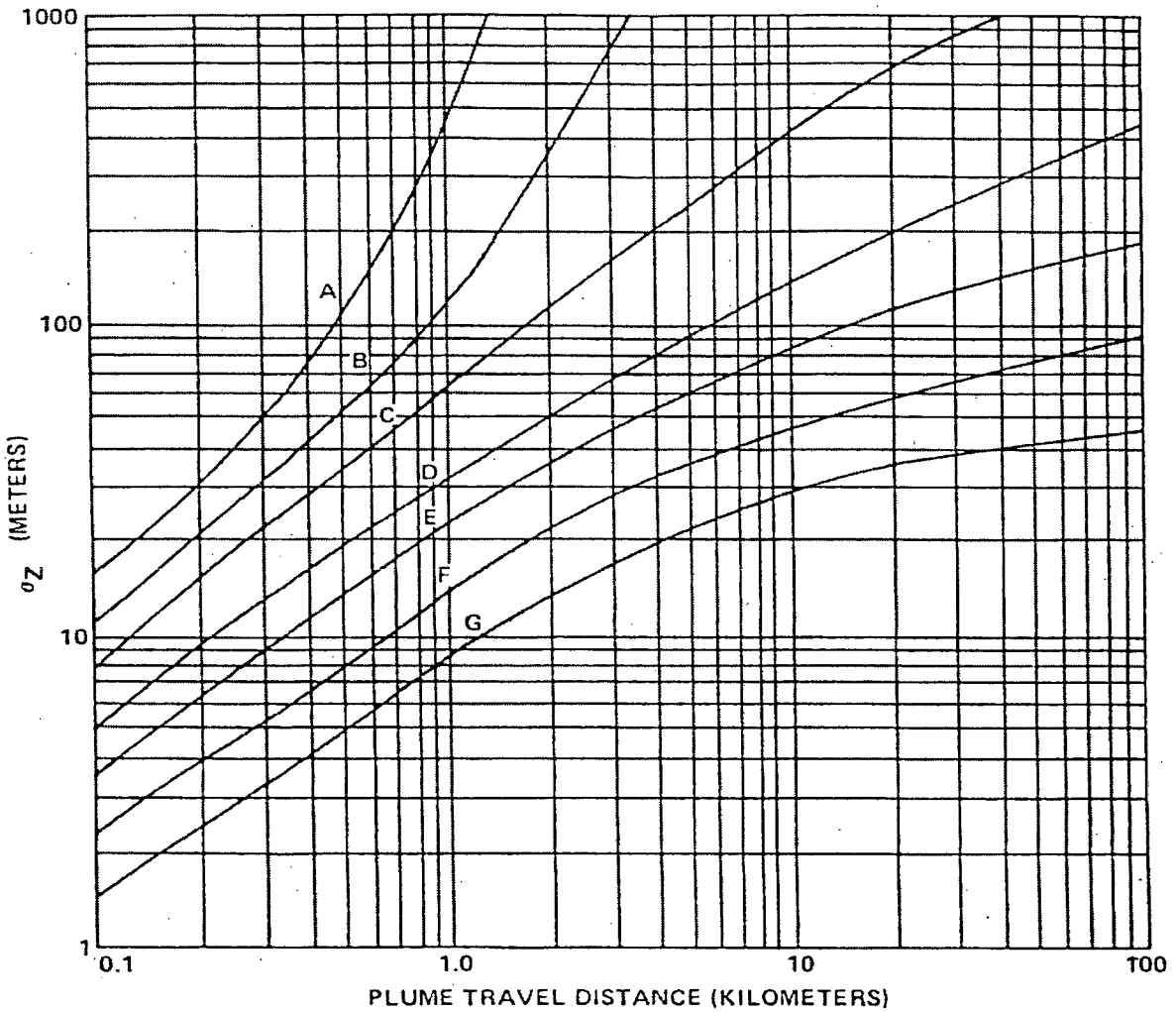

Vertical Standard Deviation of Material in a Plume (Letters denote Pasquill Stability Class)

NOTE: THESE ARE STANDARD RELATIONSHIPS AND MAY HAVE TO BE MODIFIED FOR CERTAIN TYPES OF TERRAIN AND/OR CLIMATIC CONDITIONS (E.G., VALLEY, DESERT, OVER WATER).

Figure 2-19 Vertical Standard Deviation of Material in a Plume – Standard Plume Spread as a Function of Downwind Distance [15].

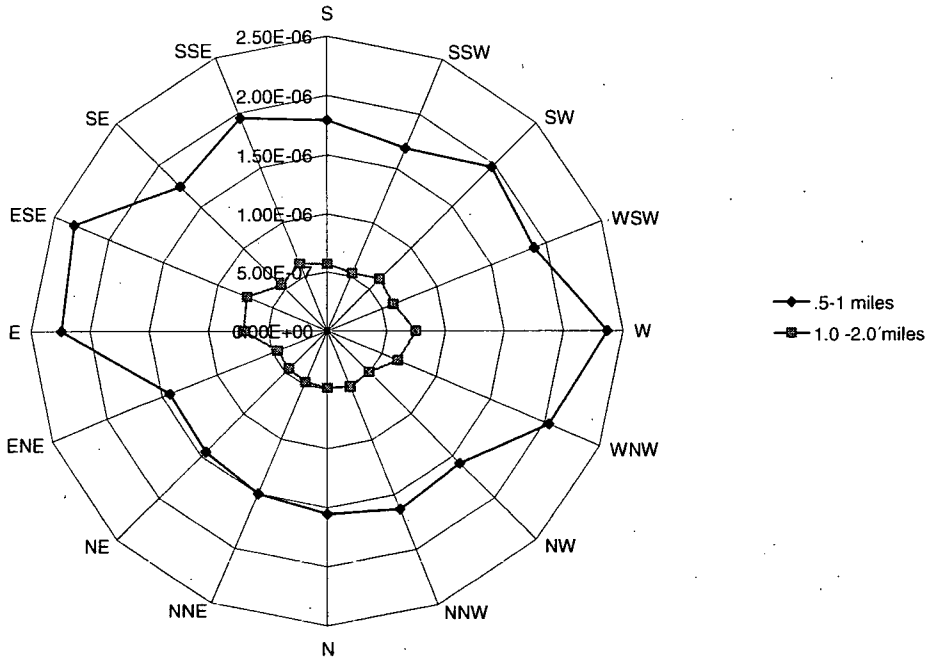

Figure 2-20 Annual Average Isopleths Obtained with Gainesville Data.

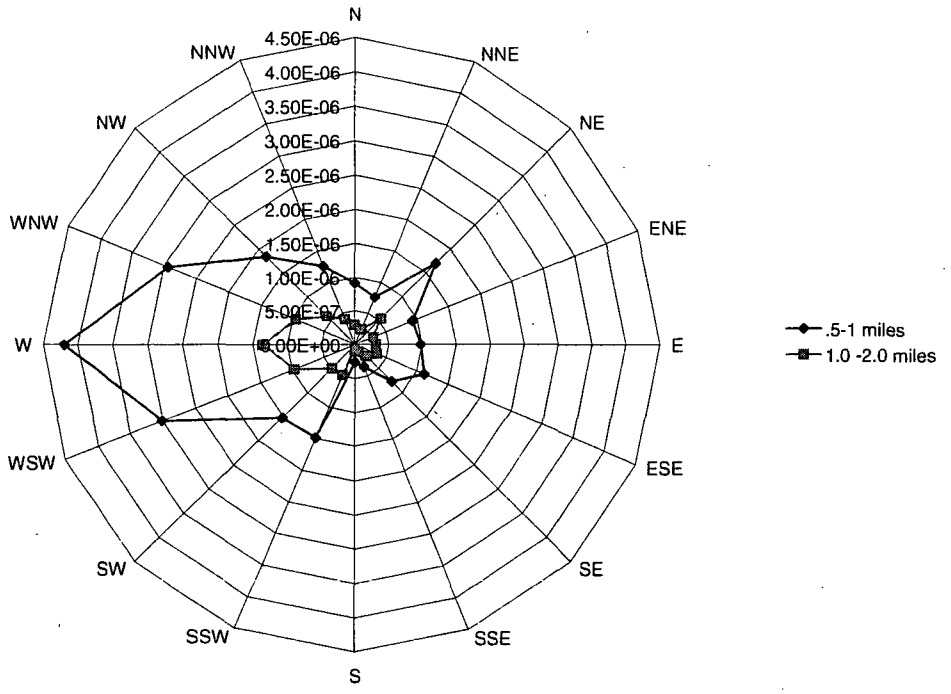

Figure 2-21 Annual Average Isopleths Obtained with Crystal River Data

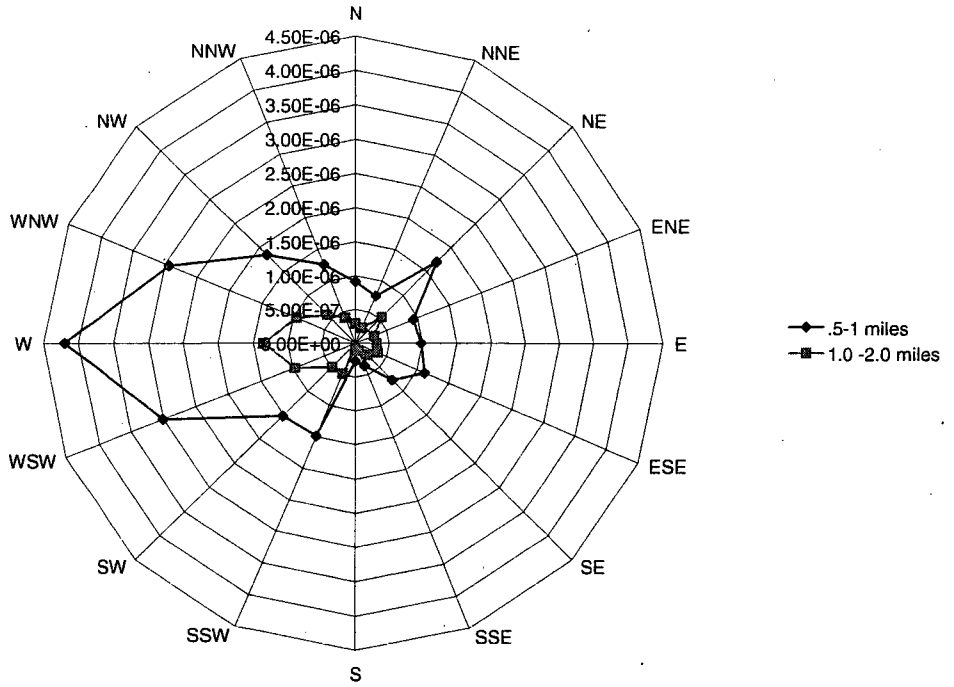

Figure 2-21 Annual Average Isopleths Obtained with Crystal River Data

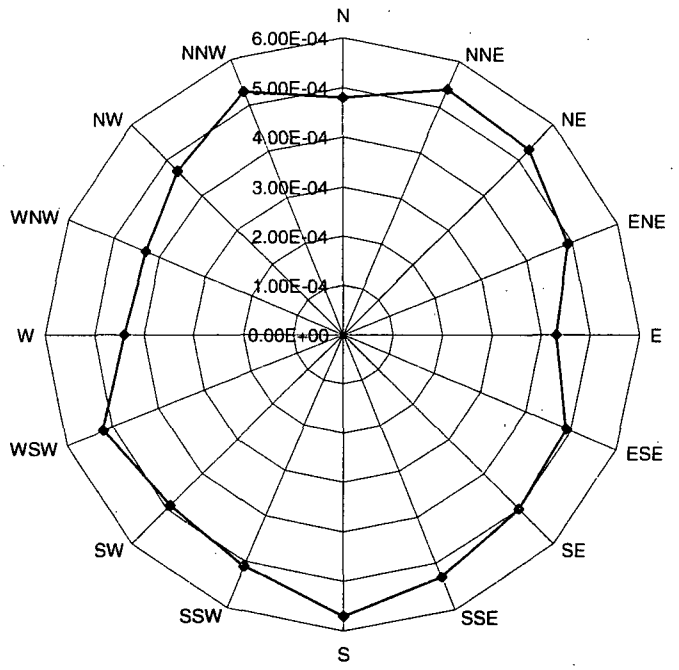

Figure 2-22 Median Values of Short Term UFTR Diffusion Coefficients

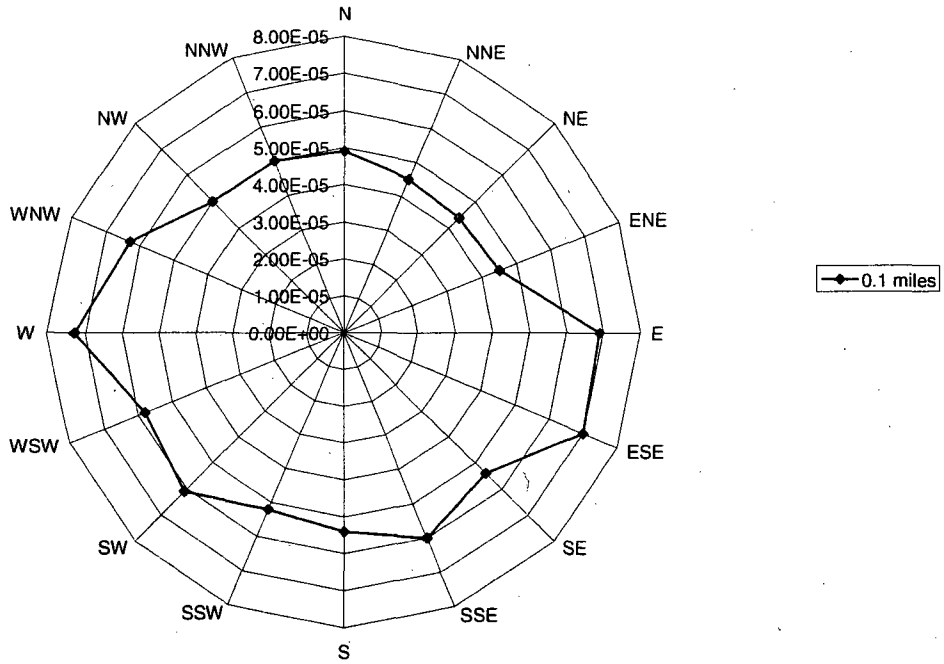

Figure 2-23 Directional Variation of Annual Average Diffusion Coefficients at 0.1 Mile Distance from UFTR.

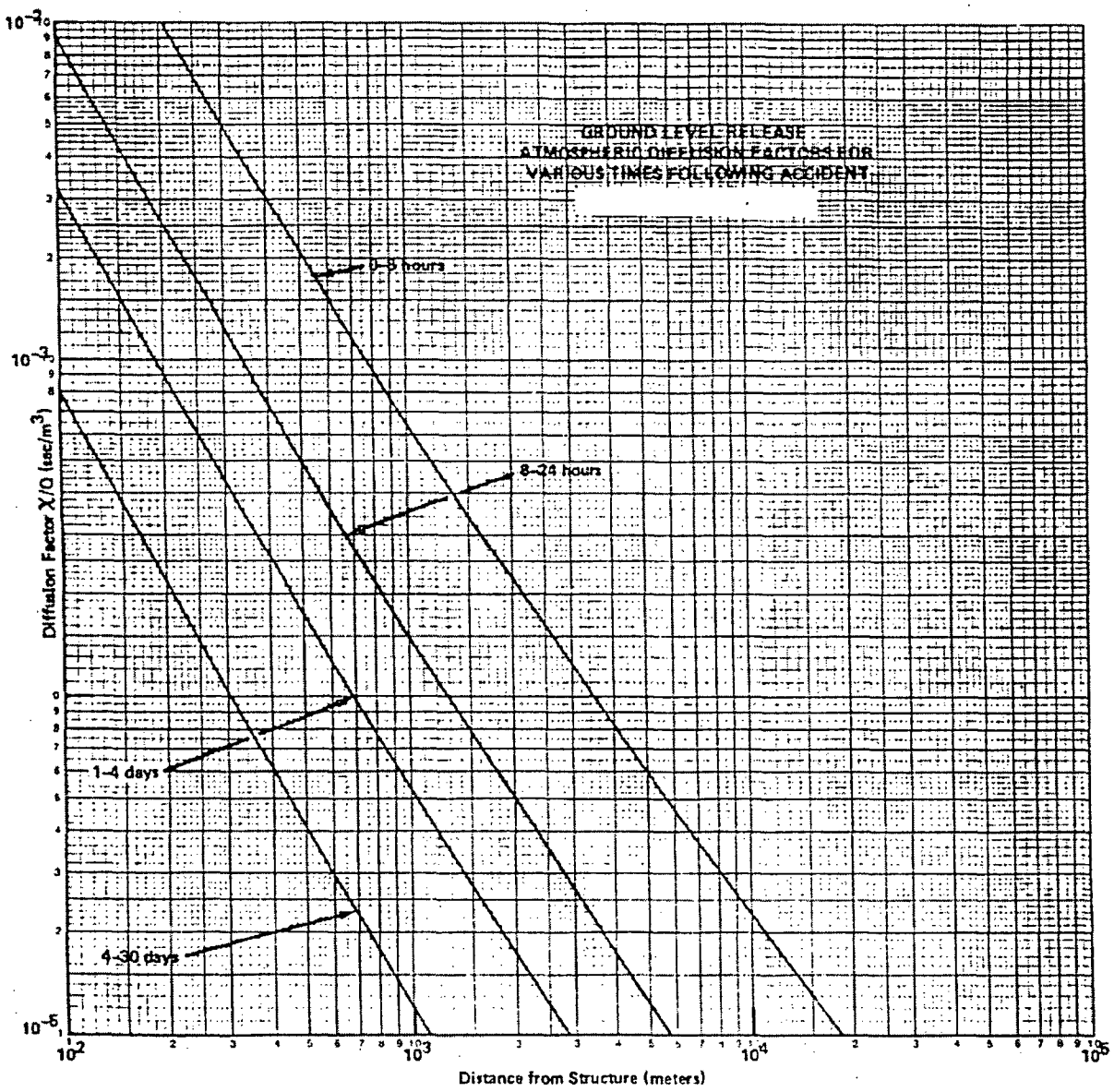

Figure 2-24 Design Basis Accident Diffusion Coefficients with NRC Standard Methodology [19]

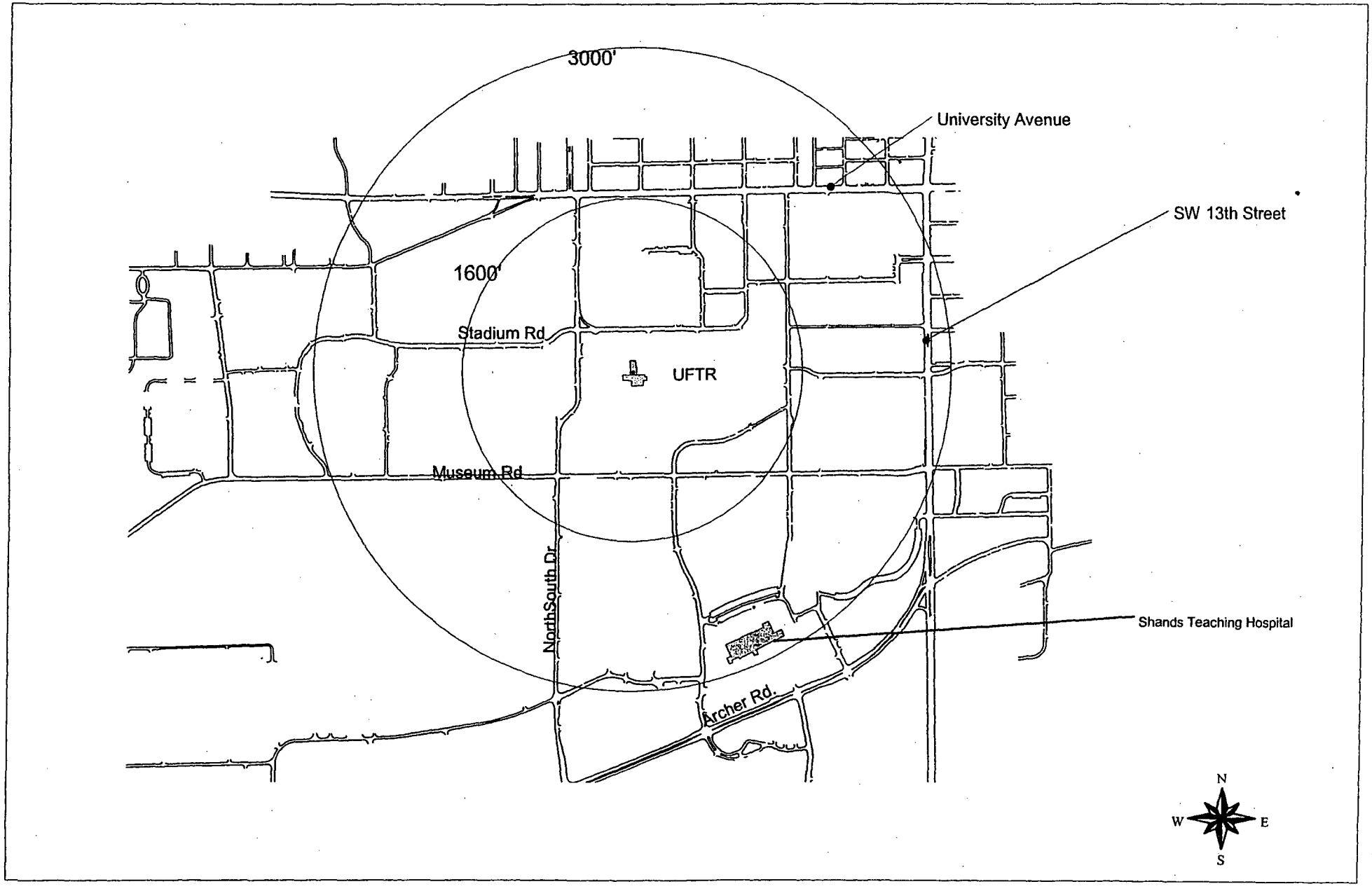

Figure 2-25 UFTR Environs Showing Distance to the Urban Boundary.

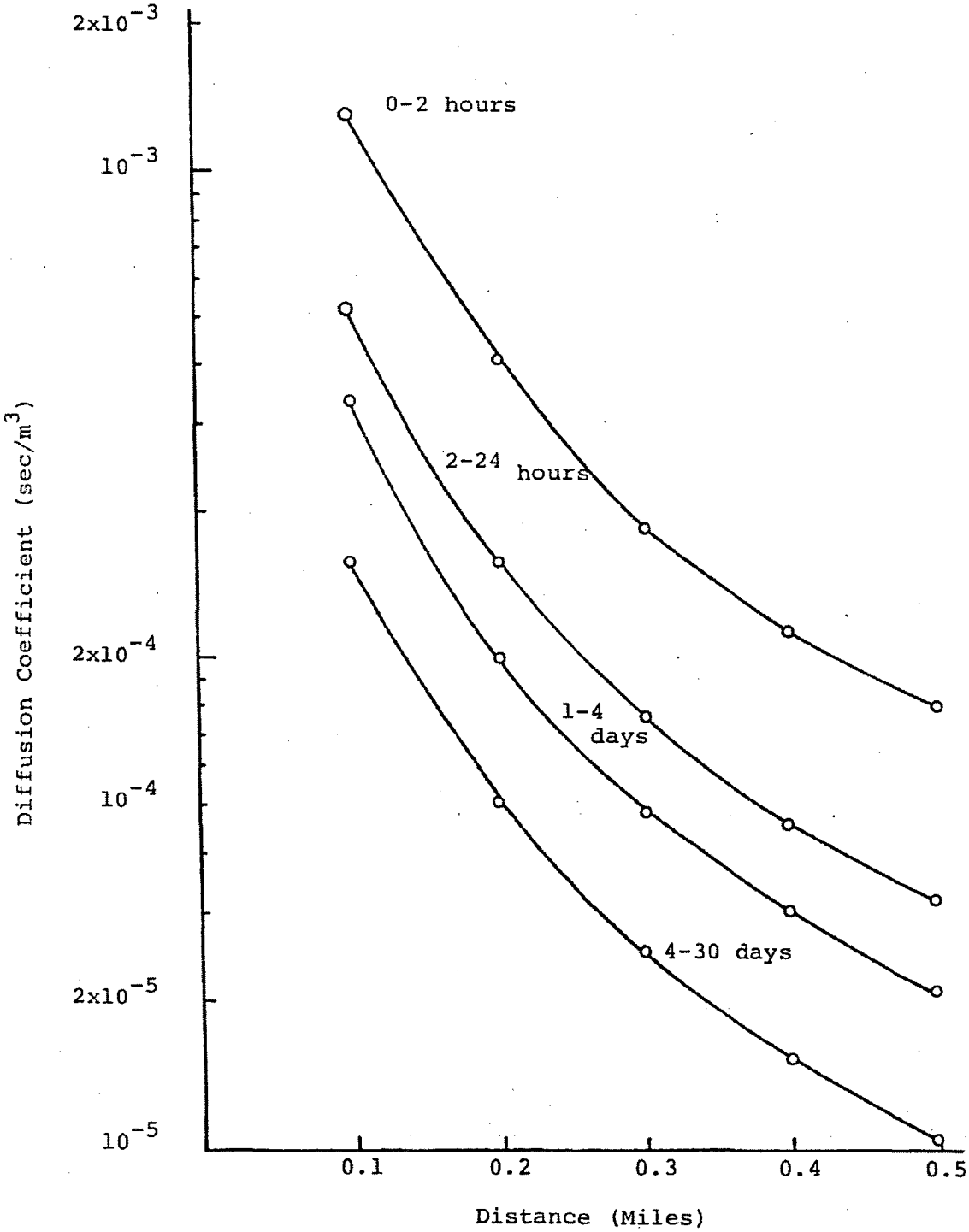

Figure 2-26 Design Basis Accident Diffusion Coefficients with Site-Specific Meteorology for Several Short-Term Time Periods [14].

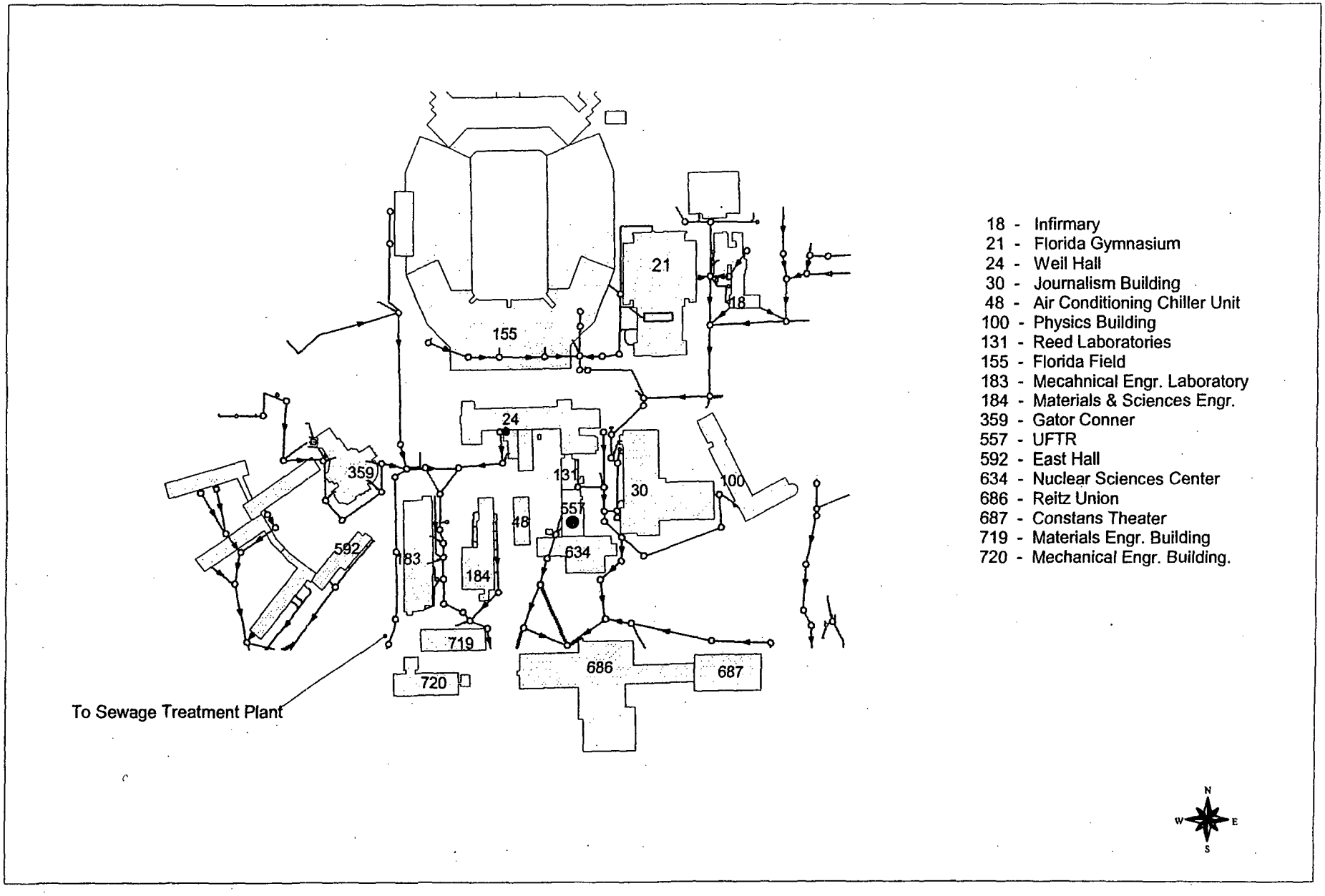

Figure 2- 27 Current Updated Sanitaty Sewage System on University of Florida Campus Around UFTR Site

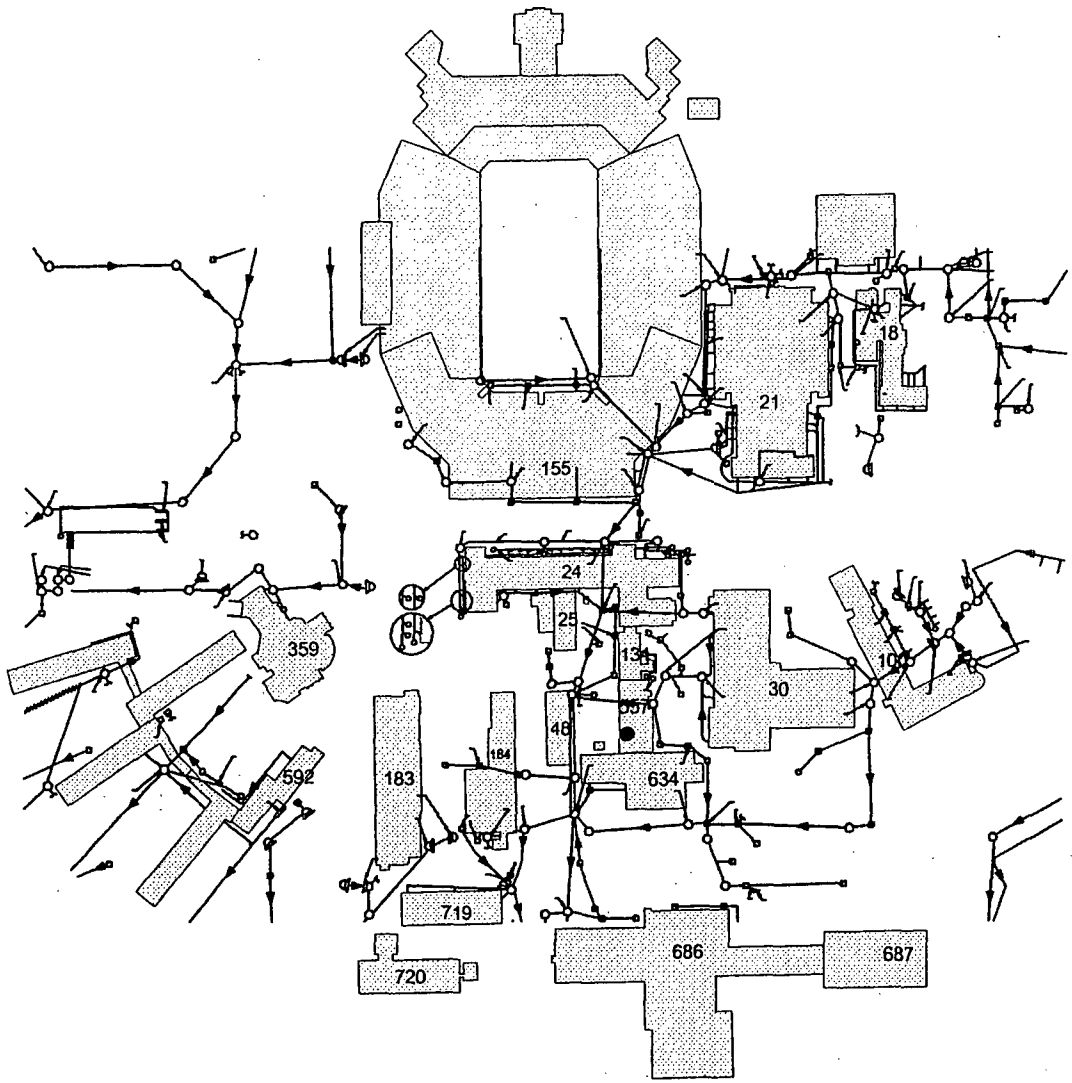

18 - Infirmary
21 - Florida Gymnasium
24 - Weil Hall
30 - Journalism Building
48 - Air Conditioning Chiller Unit
100 - Physics Building
131 - Reed Laboratories
155 - Florida Field
183 - Mecahnical Engr. Laboratory
184 - Materials & Sciences Engr.
359 - Gator Conner
557 - UFTR
592 - East Hall
634 - Nuclear Sciences Center
686 - Reitz Union
687 - Constans Theater
719 - Materials Engr. Building
720 - Mechanical Engr. Building.

Figure 2.28 - Current Updated Storm Sewage System on University of Florida Campus Around UFTR Site.

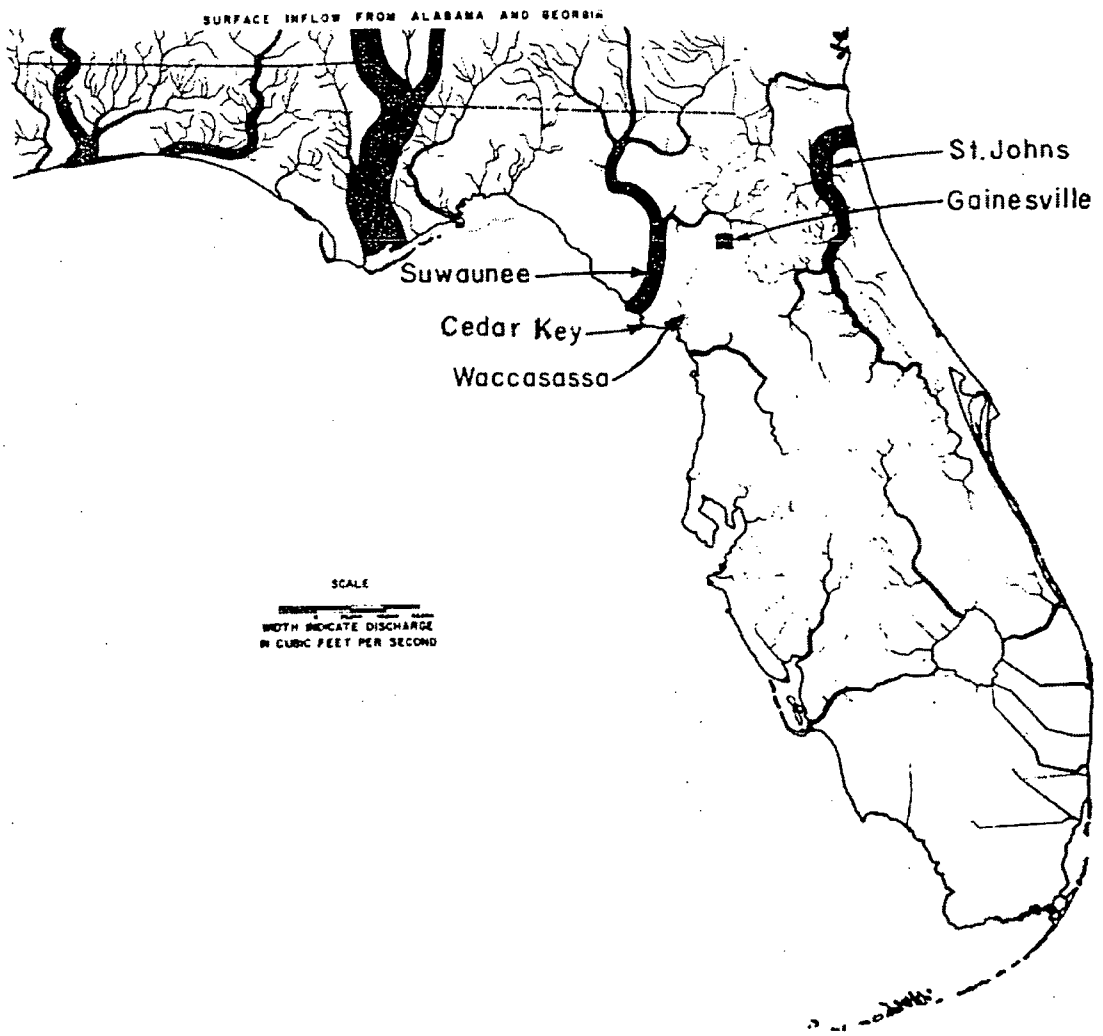

Figure 2-29 Average Flow of Surface Streams in Florida.

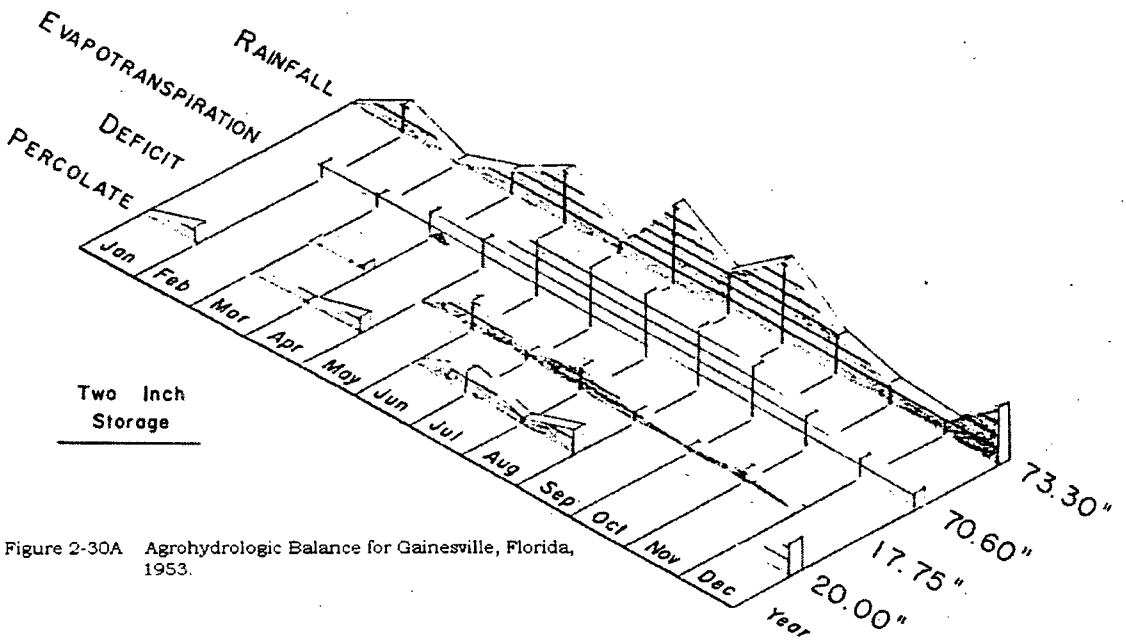

Figure 2-30A Agrohydrologic Balance for Gainesville, Florida, 1953.

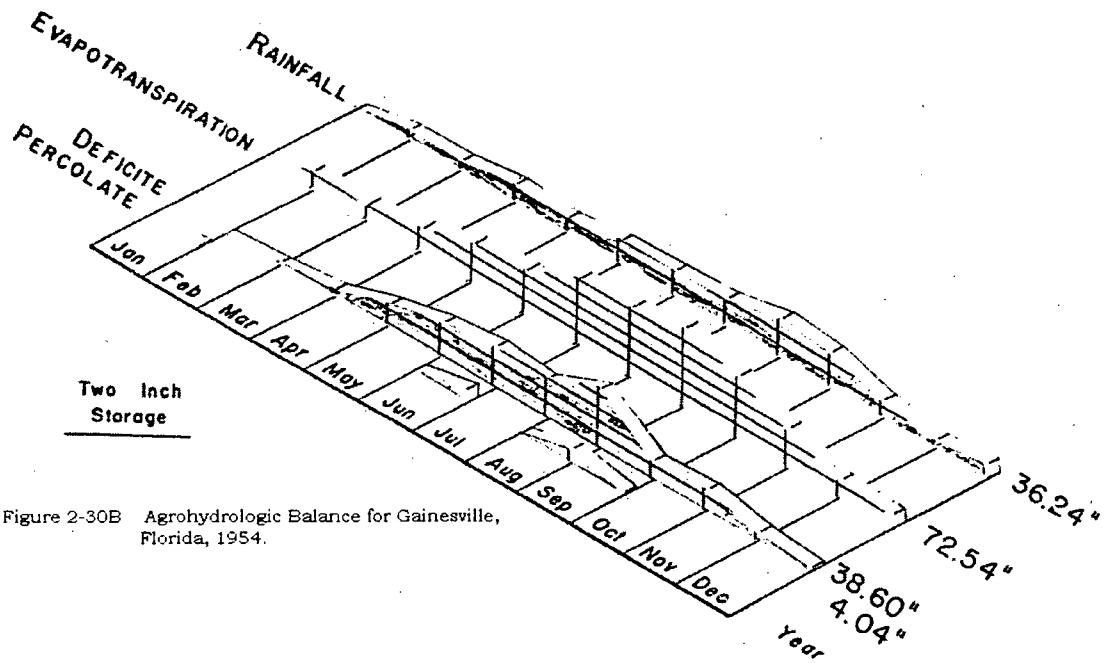

Figure 2-30B Agrohydrologic Balance for Gainesville, Florida, 1954.

Figure 2-30 Agrohydrologic Balance for Gainesville Florida, 1953 and 1954

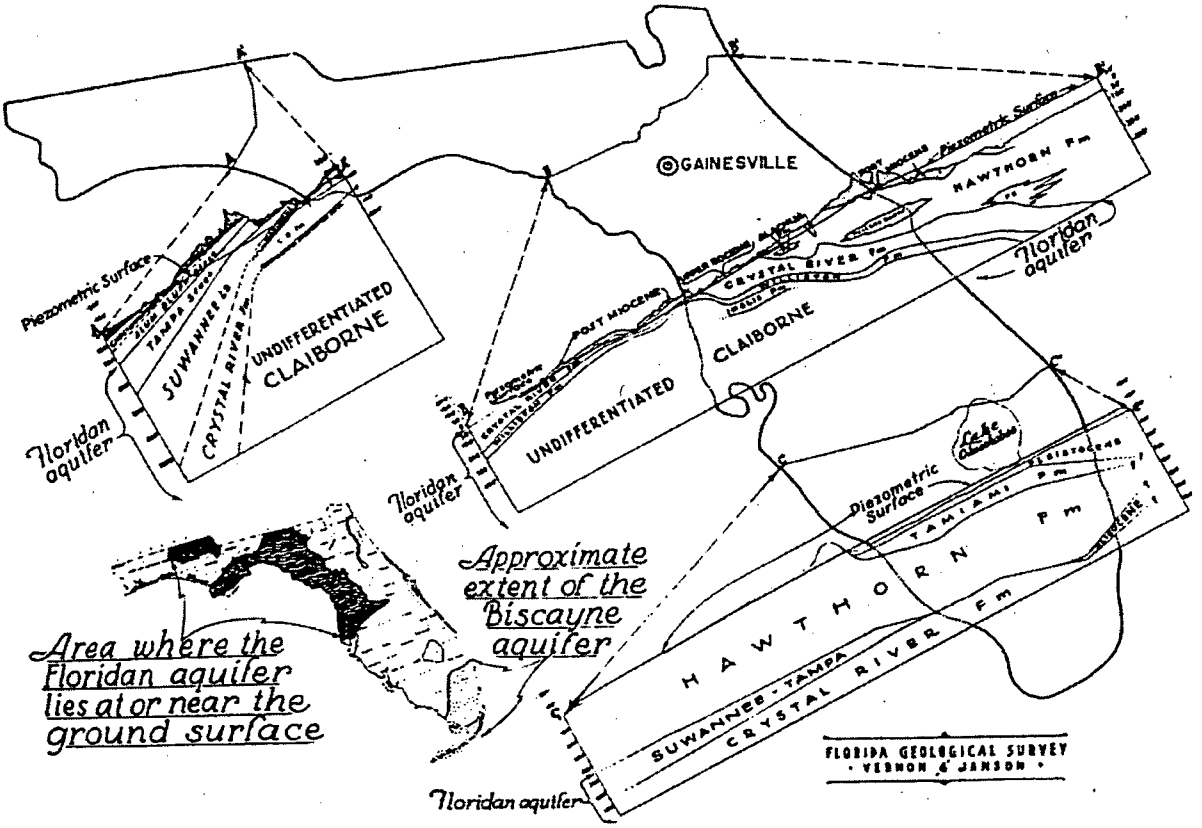

Figure 2-31 Florida Geological Survey Data for North and Central Florida Area Including Gainesville and Alachua County.

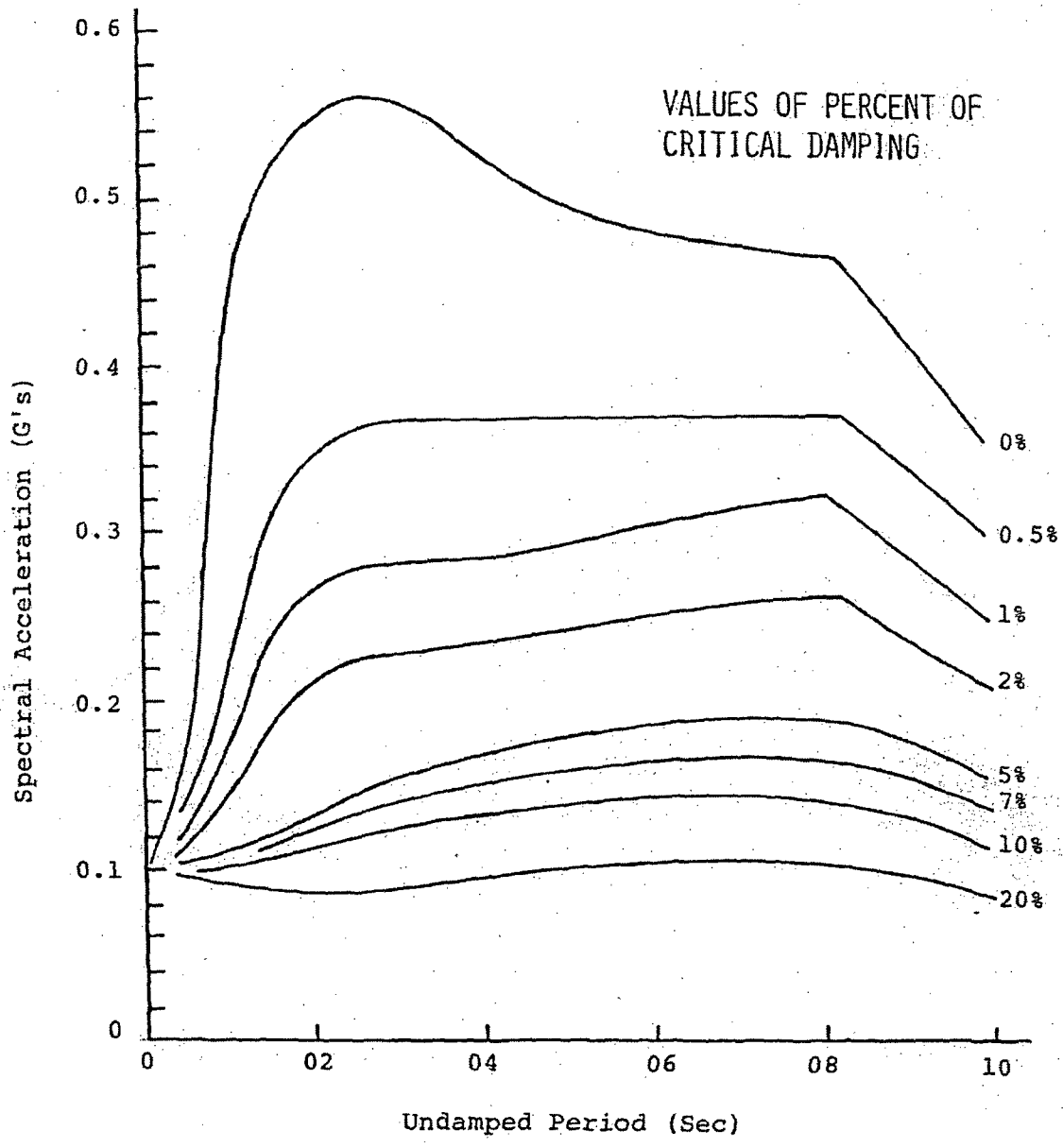

Figure 2-32 Acceleration Spectra (Maximum Hypothetical).

REFERENCES

1. U.S. *Census 2000, Redistricting Law (Public Law 94-171) Summary File*. 2000, U.S. Department of Commerce.
2. Smith, S.K. and J.M. Nogle, *Florida Population Studies Vol 34 No. 1 Bulletin 128 - Projections of Florida Population by County, 2000 - 2030*. 2001, Bureau of Economic and Business Research: Gainesville - Fl.
3. Department of Commerce and Development, *City of Gainesville Demographics: Population and Housing*. 1993: Gainesville -Fl.
4. (NTSB), N.T.S.B., *NTBS Aviation Accident/Incident Data Base*. 01/01/1983 - 31/12/2000.
5. National Climate Data Center, *2000 Local Climatological Data Annual Summary with Comparative Data. Gainesville, Florida (GNV)*. 2000, Department of Commerce.
6. Diaz, N.J., *"Application for a License to Construct, Possess and Use a Class 104 Nuclear Reactor", Chapter VI - Safety Analysis Report*: Ocala, Fl.
7. Williams, J.M. and I. W.Duedall, *Florida Hurricanes and Tropical Storms Revised Edition*. 1996, Gainesville, Florida: University Press of Florida.
8. A.Fernald, E. and E.D. Purdum, eds. *Water Resources Atlas of Florida*. 1998, Florida State University.
9. Florida Climate Center, Florida State University, *Hurricane Return Periods in Florida*. 2001.
10. National Climate Data Center, N.C.D.C., *Storm Events - Tornadoes Scale F0 and Higher*. 1950 - 2000.
11. Tornado Project, *Florida Tornadoes 1950 -1995 www.tornadoproject.com/alltorns/fltorns.htm*
12. Thom, H.C.S., *WMO Technical Note #81*. 1966.
13. Diaz, N.J. and W.G. Vernetson, *UFTR Final Safety Analysis Report*. 1981, University of Florida, Department of Nuclear and Radiological Engineering: Gainesville, Fl.
14. Ibanez, L.F., *Radiological Impact of the University of Florida Training Reactor*, in *Department of Nuclear and Radiological Engineering*. 1979, University of Florida: Gainesville. p. 105.
15. NRC, *U.S.NRC Regulatory Guide 1.111. "Methods for Estimating Atmospheric Transport and Dispersion of Gaseous Effluents in Routine Releases from Light-Water-Cooled Reactors."*
16. NRCDOSE version 2.3.2 , *XOQDOQ: Computer Program for the Meteorological Evaluation of Routine Releases of Routine Effluent Releases at Nuclear Power Stations, NUREG/CR-2919 PNL-4380* .
17. NRC, U.S.N.R.C., *Regulatory Guide 1.109 " Calculation of Annual Doses to Man from Routine Releases of Reactor Effluents for the Purpose of Evaluation Compliance with 10 CFR 50, Appendix I."* October 1977.
18. Rubin, M., *Atmospheric Dispersion of Argon 41 from UCLA Nuclear Reactor*. 1976, University of California: Los Angeles.

19. NRC, *U.S.NRC Regulatory Guide 1.4 " Assumptions used for Evaluating the Potential Radiological Consequences of a Loss of Coolant Accident for Pressurized Water Reactors".*
20. Duncan, J.M., *University of Florida Training Reactor Hazards Summary Report.* 1958, Florida Engineering and Industrial Experiment Station, Bulletin Series #99.
21. NRE, Department of Nuclear and Radiological Engineering, *"Standard Operating Procedures of the University of Florida Training Reactor".* 2000, University of Florida: Gainesville, Fl.
22. *Nuclear Reactors and Earthquakes - TID 7024.* 1963, U S Atomic Energy Commission.

APPENDIX 2A

ORIGINAL UFTR METEOROLOGICAL DATA

(Reference 2)

A. ORIGINAL DETERMINATION OF UFTR WIND ROSE DATA

2A.1 Wind Direction and Velocity

Due to the lack of available local data regarding atmospheric stability, wind direction and velocity, and the relationship of precipitation and wind, a program was started to collect these micrometeorological data. The information as reported in Reference 2 is presented here for completeness.

A Bendix-Friez aerovane was installed on the radar tower at the University of Florida in October, 1956. The instrument is located approximately 125 ft. above ground level (272 ft. above mean sea level) in an area reasonably free of disturbing structures about 1500 ft. from the reactor site. From the latter part of October, 1956, wind direction and velocity were recorded continuously for this station. A second aerovane was installed early in May, 1957, on the same tower about 30 ft. above ground level (177 ft. above mean sea level). Since the elevation of the reactor stack outlet 164 ft. above mean sea level, data taken at this second station should be fairly representative of the undisturbed conditions at the points of gas discharge.

Figure 2A-1 gives an annual comparison of the wind data at the two elevations for the year from July, 1957, through June, 1958. More detailed data are presented as monthly wind roses in Figures 2A-2 and 2A-3. Figure 2A-2 covers the period January, 1957, through June, 1957, for the upper and lower elevations for the period July, 1957, through June, 1958.

In constructing the wind roses, five air velocity groups were used--cal - 1,2-4, 5-7, 8-12 and 13+ miles per hour. Winds of velocity greater than 13 m.p.h. occurred so seldom and for such short duration that it was considered unnecessary to indicate separate groups above 13 m.p.h. The greatest hourly movement of winds recorded during each month and the time of occurrence are given in Table 2A-1.

A wind direction and speed frequency distribution is given in Table 2A-2 for the upper and lower stations for this period, June, 1957, through May, 1958. The prevailing winds at the upper station fall in the range of 5 - 12 m.p.h., while those at the lower station fall in the range of calm to 4 m.p.h. Winds at both elevations show a slight preference for the quadrant from NE to SE.

The persistance of wind direction at 30-ft. level for the period June, 1957 through May, 1958, is indicated in Table 2A-3.

2A.2 Precipitation

An automatic rain gage is located on the University Campus. The data from this station are available to this project through the U.S. Weather Bureau but the hourly precipitation data have been distributed only through the month of December, 1957, at the present time. The daily rainfall for 1957 at Gainesville, Florida is shown in Table 2A-4.

ORIGINAL UFTR WIND AND PRECIPITATION DATA

The following three figures, 2A-1, 2A-2, and 2A-3 summarize the wind and precipitation data for the University of Florida as wind roses for the period January, 1957 through June, 1958. Wind data were obtained from aerovanes located on the College of Engineering radar tower at elevations of 125 feet and 30 feet above ground. The wind data were divided into five velocity groups, calm-1, 2-4, 5-7, 8-12, and 13+ miles per hour. The radial length of direction lines represented by the windscale indicates the number of hours for which winds of the designated velocity group prevailed from the point indicated. Shaded areas represent the number of hours in each velocity range during which precipitation occurred.

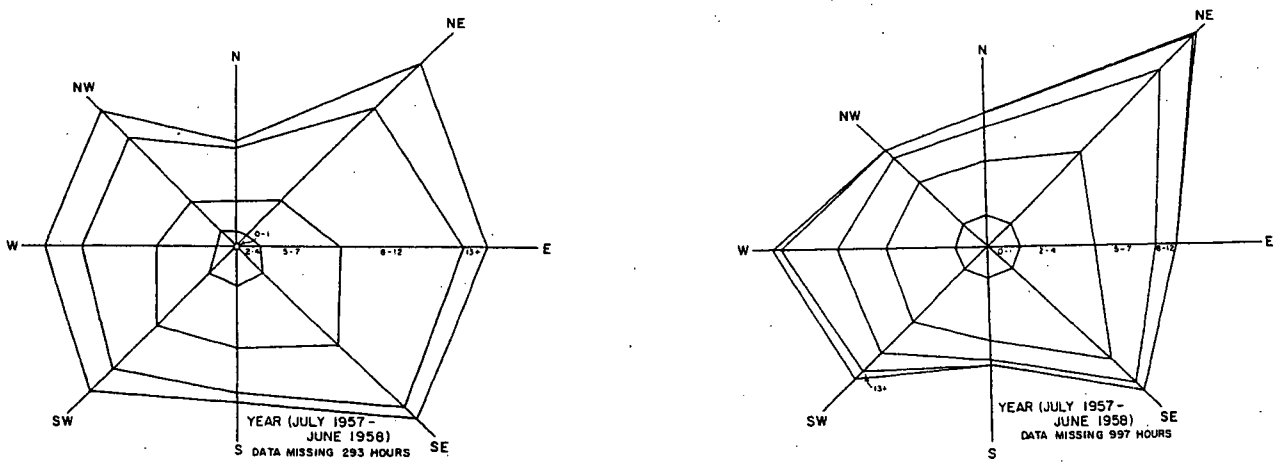

UPPER ELEVATION

LOWER ELEVATION

Figure 2A-1. Original UFTR Annual Summary of Wind Data Showing Monthly Totals Averaged Over the Year, Reference 2.

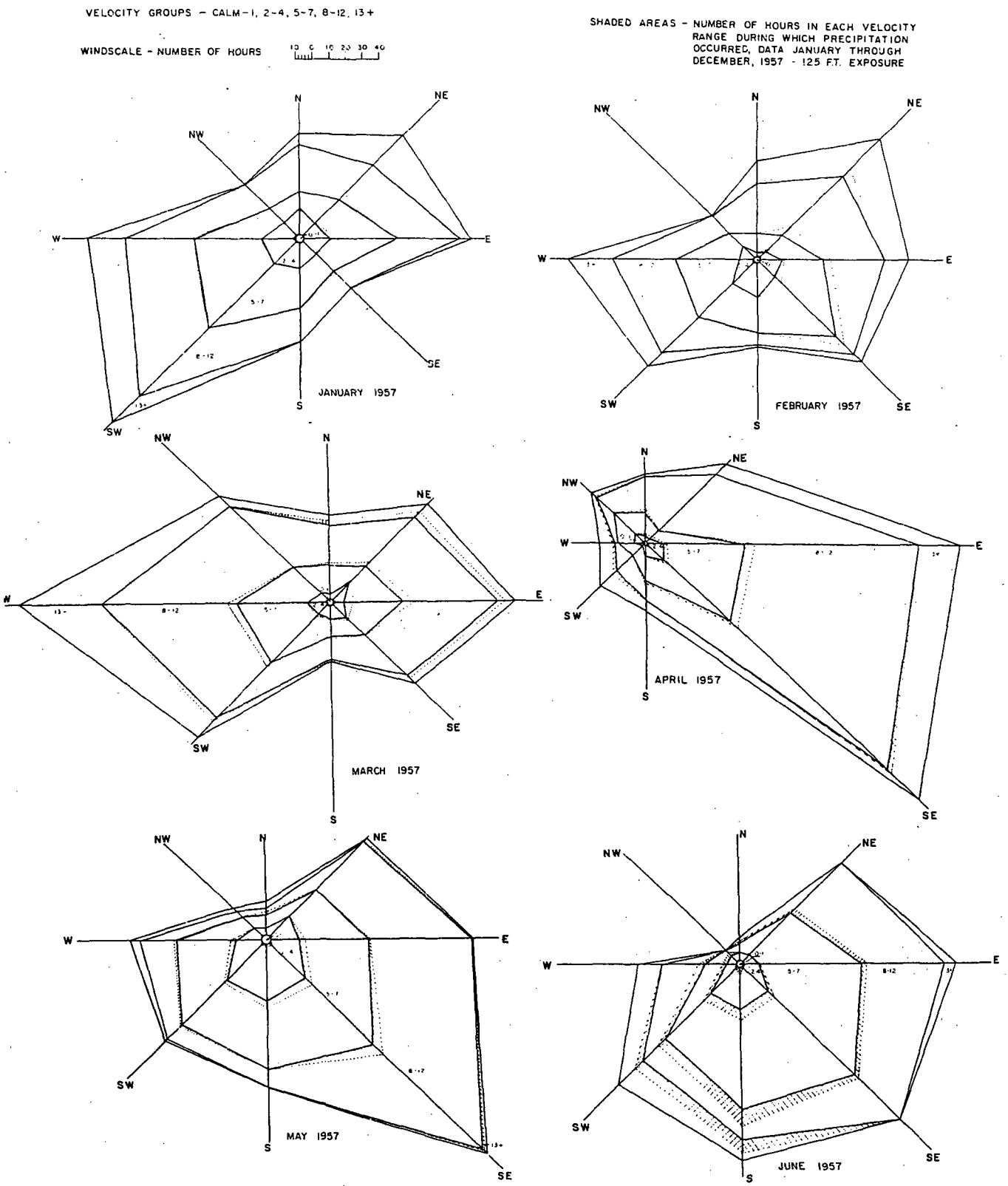

Figure 2A-2. Monthly Wind Roses, January-June, 1957 (Upper Elevation Only).

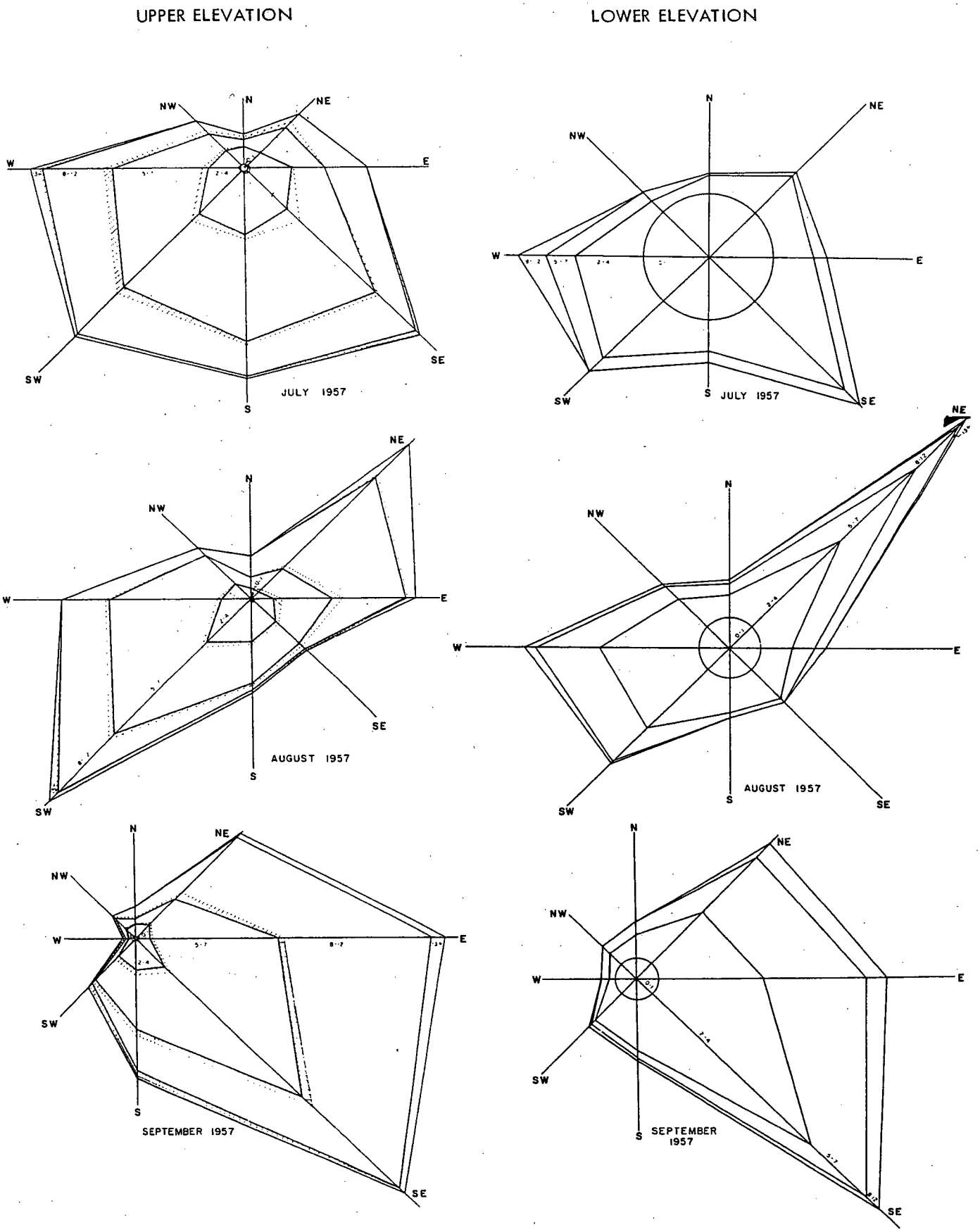

Figure 2A-3. Comparison of Upper and Lower Elevation Monthly Wind Roses, July, 1957-June, 1958.

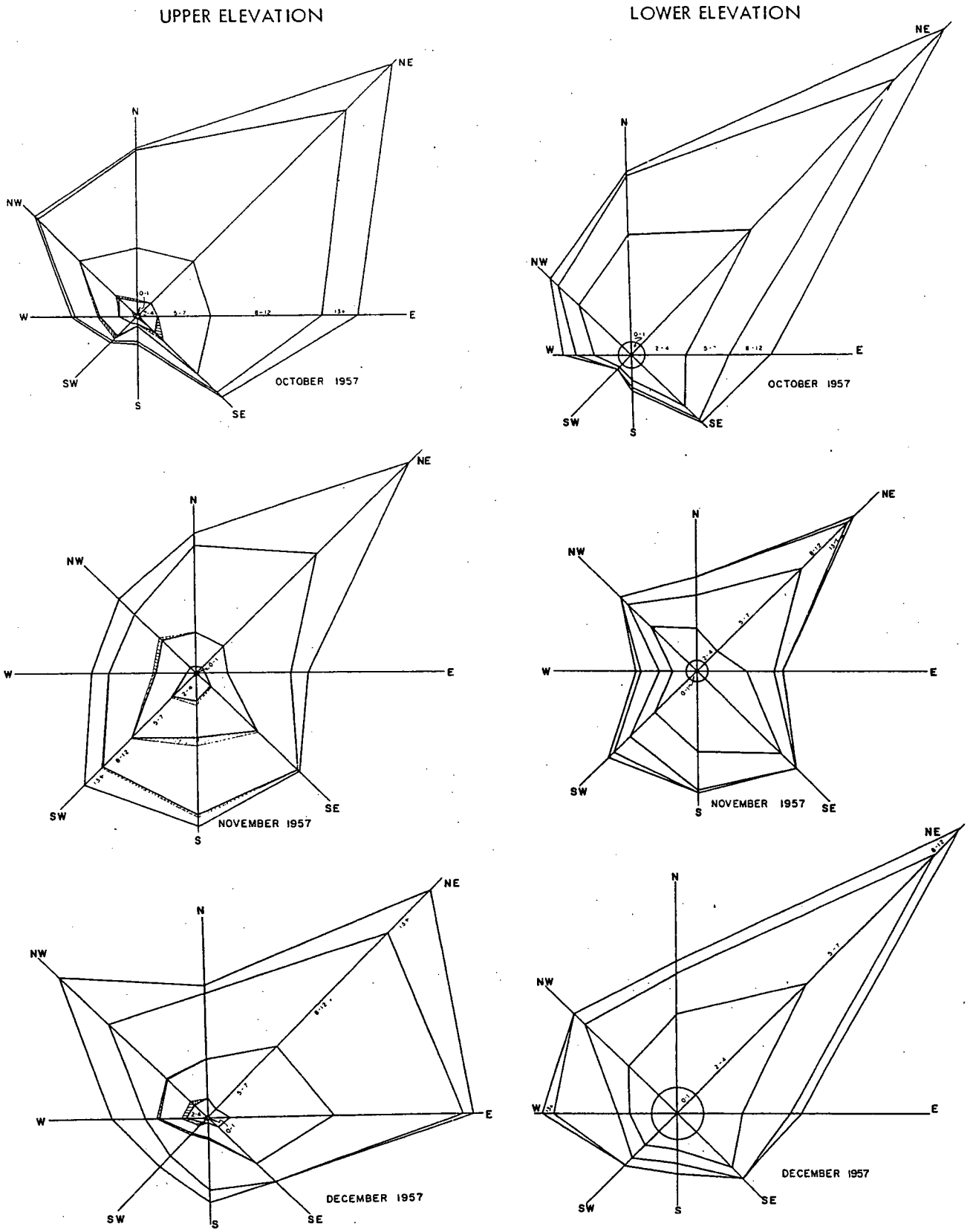

AEROVANES LOCATED ON RADAR TOWER
UPPER VANE - 125 FEET ABOVE GROUND
LOWER VANE - 30 FEET ABOVE GROUND

VELOCITY GROUPS - CALM-1, 2-4, 5-7, 8-12, 13+

SHADED AREAS - NUMBER OF HOURS IN EACH VELOCITY RANGE DURING WHICH PRECIPITATION OCCURRED, DATA JANUARY THROUGH DECEMBER, 1957 — 125 FT. EXPOSURE

WINDSCALE - NUMBER OF HOURS 10 0 10 20 30 40

Figure 2A-3. (Continued)

UPPER ELEVATION

LOWER ELEVATION

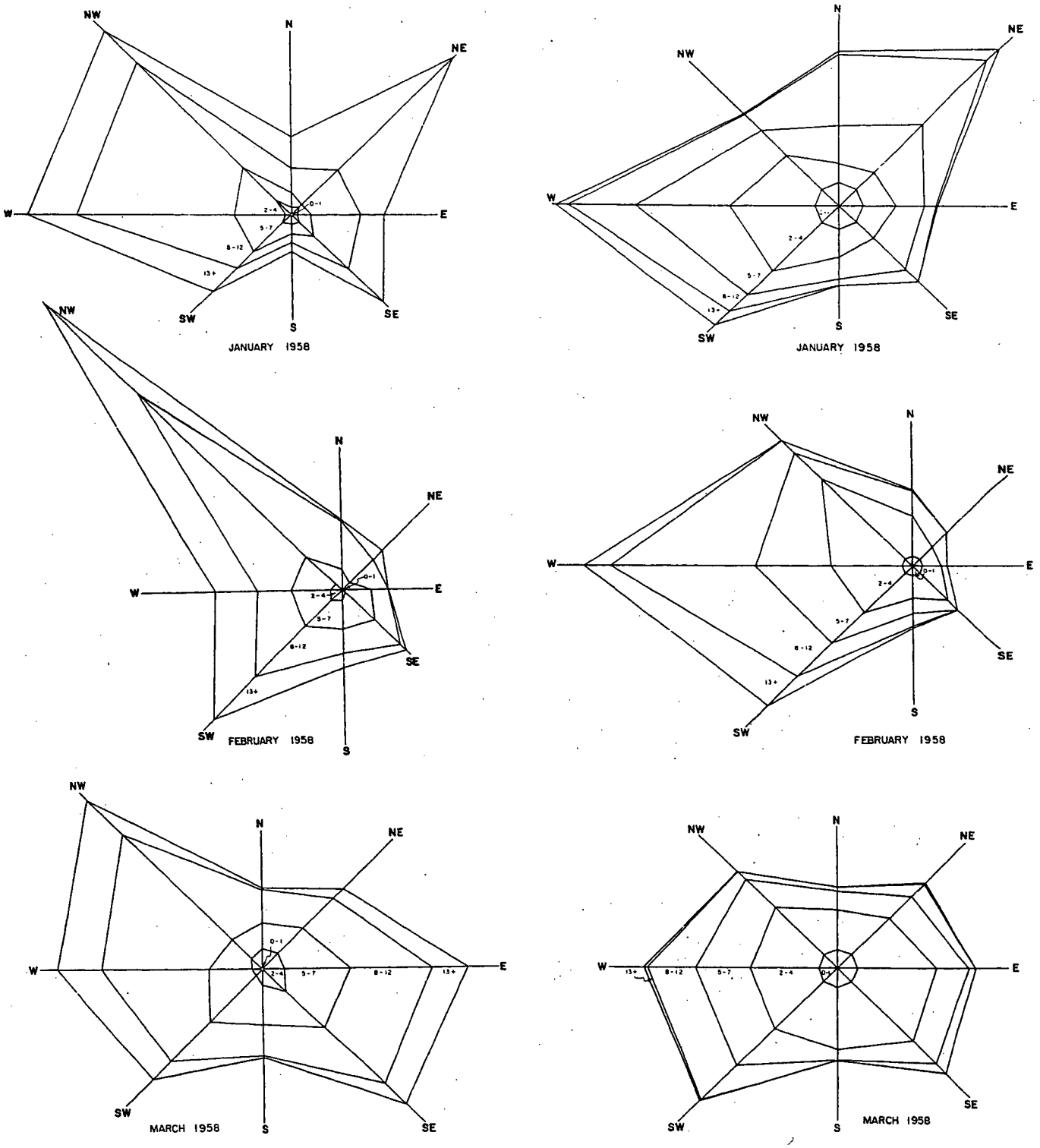

Figure 2A-3. (Continued)

UPPER ELEVATION

LOWER ELEVATION

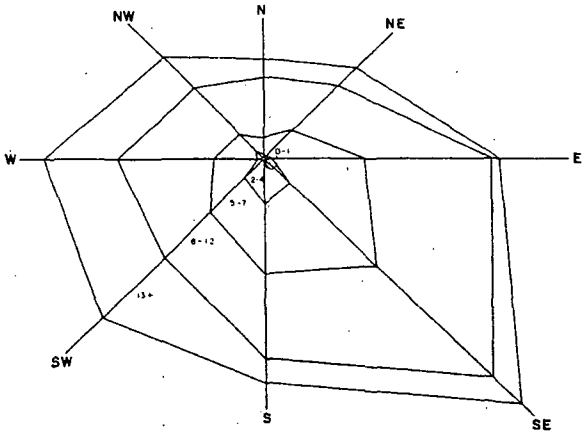

APRIL 1958

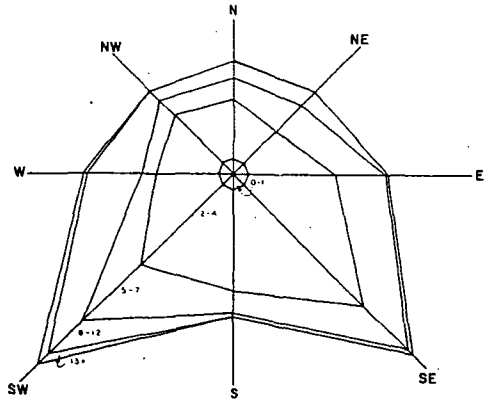

APRIL 1958

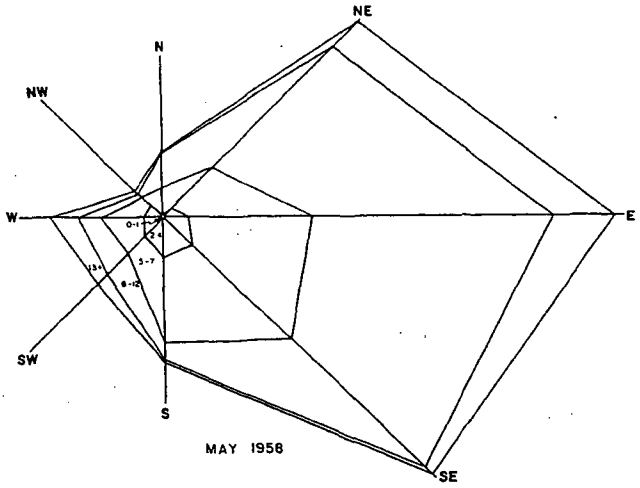

MAY 1958

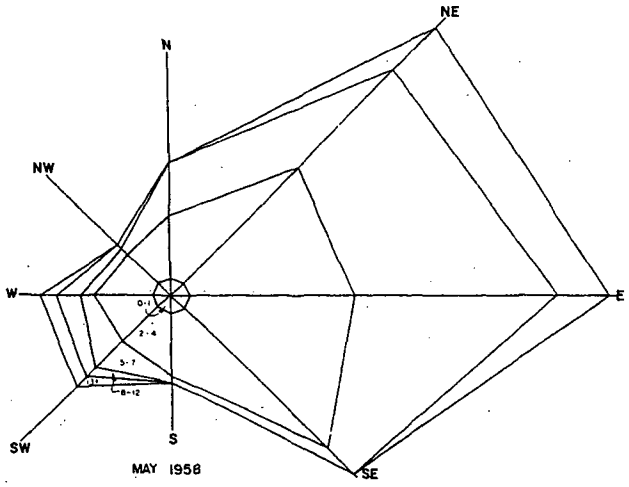

MAY 1958

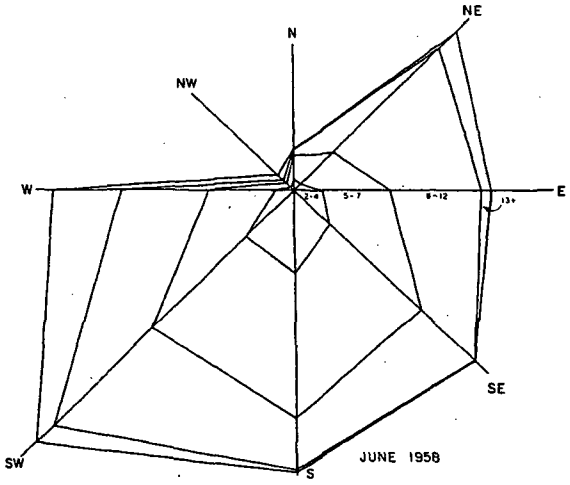

JUNE 1958

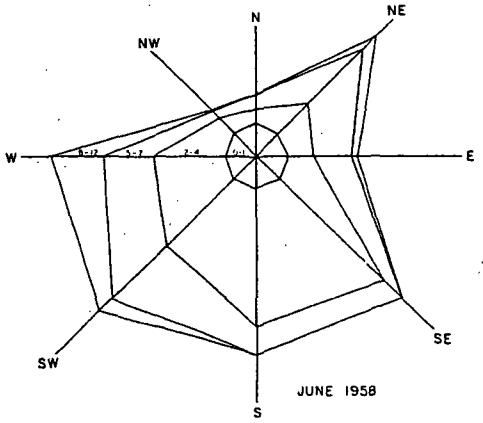

JUNE 1958

WINDSCALE - NUMBER OF HOURS 10 0 10 20 30 40

AEROVANES LOCATED ON RADAR TOWER
UPPER VANE - 125 FEET ABOVE GROUND
LOWER VANE - 30 FEET ABOVE GROUND

VELOCITY GROUPS - CALM-1, 2-4, 5-7, 8-12, 13+

SHADED AREAS - NUMBER OF HOURS IN EACH VELOCITY RANGE DURING WHICH PRECIPITATION OCCURRED, DATA JANUARY THROUGH DECEMBER, 1957 - 125 FT. EXPOSURE

Figure 2A-3 (Continued)

Table 2A-1

MAXIMUM HOURLY AIR MOVEMENT

UF SITE DATA

Date	Time	Wind Velocity (mph)
January 10	12 - 1 p.m.	W-20
February 19	11 - 12 a.m.	W-25
March 26	2 - 3 p.m.	W-24
April 5	12 - 1 p.m.	SW-22
May 4	12 - 1 p.m.	W-22
June 28	2 - 3 p.m.	SW-20
July 1	3 - 4 p.m.	W-15
August 21	2 - 3 p.m.	NE-18
August 22	3 - 4 p.m.	NE-18
August 23	4 - 5 p.m.	NE-18
September 8	2 - 3 p.m.	S-18
October 9	4 - 5 a.m.	NE-16
November 11	11 - 12 p.m.	NE-20
November 25	12 - 1 p.m.	W-20
December 11	4 - 5 p.m.	NW-21

Table 2A-2

WIND DIRECTION AND SPEED
Per cent of total number of hourly occurrences for each direction and speed group. Wind speed in miles per hour.

	125 Ft. Level (June, 1957 - May, 1958)							30 Ft. Level (June, 1957 - May, 1958)						
Calm (0-1)	Calm	2-4	5-7	8-12	13+	Missing	Total %	Calm	2-4	5-7	8-12	13+	Missing	Total %
Calm (0-1)	1.1					4.0	5.1	17.0					9.6	26.6
N		0.8	1.7	3.2	0.5		6.2		3.4	2.1	0.8	0.0		6.3
NE		0.9	3.2	7.6	3.6		15.3		6.4	6.6	2.9	0.2		16.1
E		1.2	5.2	7.3	1.4		15.1		4.8	3.7	1.1	0.0		9.6
SE		2.2	6.4	5.4	1.0		15.0		8.0	2.4	0.4	0.0		10.8
S		2.2	3.9	2.7	0.7		9.5		3.6	1.1	0.3	0.0		5.0
SW		2.1	4.3	3.3	2.0		11.7		4.4	2.6	1.4	0.6		9.0
W		1.1	3.5	4.3	2.0		10.9		3.9	2.7	3.1	0.5		10.2
NW		1.2	2.4	5.3	2.3		11.2		3.7	2.0	0.7	0.0		6.4
TOTAL %	1.1	11.7	30.6	39.1	13.5	4.0	100.0	17.0	38.2	23.2	10.7	1.3	9.6	100.0

Table 2A-3

PERSISTENCE OF WIND DIRECTION
June 1957 - May 1958 (30 ft. Level)

Hours	Calm	N	NE	E	SE	S	SW	W	NW	Missing	Total Frequency	Total Hours
1	122	107	140	135	137	117	136	132	123	5	1154	1154
2	51	38	63	65	70	63	46	64	30	4	494	988
3	31	25	39	39	49	16	26	26	21	4	276	828
4	23	14	22	28	27	18	19	26	15	0	192	688
5	20	8	16	11	16	5	12	21	9	1	119	595
6	13	5	8	9	18	5	11	7	4	2	82	492
7	17	6	8	6	7	1	3	4	6	1	59	413
8	16	5	3	4	6	3	3	6	4	2	52	416
9	5	1	5	2	2	1	6	3	1	0	26	234
10	16	1	4	2	5	2	3	4	1	0	38	380
11	6	2	5	2	4		4	3	0	6	32	352
12	5	1	5	3	3		2	2	1	0	22	264
13	5	2	1	2	3		5	1	1	1	21	273
14	4		1	1	1		1	2	2	0	12	168
15	2		3		0				0	1	6	90
16			1		1		0		1	2	5	80
17			4	1	1				1	0	7	119
18		1	2				2		0	1	6	108
19			5						1	0	6	114
20			1				1			2	4	80
21								1		2	3	63
22								2		1	3	66
23										0	0	0
24			1					1		2	4	96
25			1							0	1	25
26										1	1	26
27			1					1		0	2	54
28			1							0	1	28
29										1	1	29
30			1							0	1	30
33			1					1		0	2	66
35										1	1	35
36										1	1	36
40										1	1	40
41			1	1						0	2	82
47										1	1	47
63			1							0	1	63
138										1	1	138
											TOTAL	8,760

Table 2A-4

DAILY RAINFALL FOR 1957

Gainesville, Florida

Date	Jan.	Feb.	Mar.	Apr.	May	June	July	Aug.	Sept.	Oct.	Nov.	Dec.
1			.01	.85	.06			1.23		1.25		
2				.31	.07		.40			.47		
3			.04		.20	.03	.54			.08		
4			1.91		.06	.12	.60		.26	.01		.15
5			.01	.78	.01	.97	T	.09	1.00			
6			.09	.03		.95	.03	3.07	.05			
7						.19	.57	.35	.40			
8			.13			2.25	.07	.85	.32			
9		.03				1.19		.04	.29		.12	.61
10					.20	.07		1.84	.37			
11		.15		.03	.53		.39		.14			.07
12				.89			.39					
13	.02				.79		.02					
14					T		.53			.01	.62	
15					.12		.01		.23		.12	
16	.33				3.00		T		.60			
17	T				.11	.01	1.44		1.45			
18					.02	.30	.05	.16	.35			
19		.21	.03	.55	.08		1.16	.90	.14		.24	
20		.54		.05	.02				.15			
21	.04	.33										
22	.20		1.25			.55						
23					.02	.03		.51				
24			.74		.55					.10		
25		.10	1.14		.01	.19	.15			.02	.49	
26		.44				.32	T					.04
27					.05	.02	.43		.03			
28		.57				.07	.42	.07	.33			
29					.68	.25	.03	1.11	.39			
30				.45			1.20	.11			.53	
31					.11		.29					
Total	0.59	2.37	5.35	3.94	6.69	7.51	8.72	10.33	6.50	1.94	2.12	0.87

Total for the Year 56.93

Precipitation data obtained from the Weather Bureau's hourly totals is presented on the monthly wind roses for the upper station for the period January through December, 1957, in Figures 2A-2 and 2A-3. The shaded areas indicate the number of hours in each velocity range during which precipitaition occurred. Additional months will be analyzed as information becomes available from the U.S. Weather Bureau.

An analysis of the frequency of wind direction by velocity groups during precipitation is given in Table 2A-5.

2A.3 Inversion and Atmospheric Stability

In May 1957, equipment was installed on a 400 ft. radio tower about two miles west of campus to obtain vertical temperature data. Three days later this installation was destroyed by lightning. Continued attempts to install equipment on this tower met with difficulties, so another location was selected. This new location on the College of Engineering radar tower has now been instrumented. The installation consists of shielded thermocouples, exposed at elevations of 130 ft. and 5 ft. above the ground, connected to a recording potentiometer. Stability conditions of the atmosphere will be determined in this manner and inversion data computed from the temperature profiles obtained.

Due to the lack of temperature lapse rate data, a study was made to estimate the relative frequency of turbulent and stable conditions using the wind speed ratio obtained from readings at the 125 ft. and 30 ft. levels as the criterion of turbulence.

As discussed in the Summary Report for the Argonaut Reactor, the British Chemical Warfare Service has used ratios as a measure of turbulence very successfully. The same range of n, a parameter related to wind ratio by the equation

$$R = \frac{U}{U_o} = \frac{Z}{Z_o}^{\frac{n}{2-n}} \qquad (2A\text{-}1)$$

U = wind speed at upper level

U_o = wind speed at lower level

Z = height at upper level

Z_o = height at lower level

was used to define the same three classifications of turbulence as used in the Argonne Report.

It should be recognized that no long-range conclusions can be drawn from this study regarding turbulent and stable conditions since insufficient data were available.

The results of this study are presented in Table 2A-6.

*"Summary Report on the Hazards of the Argonaut Reactor," D.H. Lennox and C.N. Kelber, ANL 5647.

Table 2A-5

WIND FREQUENCY DURING PRECIPITATION

University of Florida, Gainesville, Florida

Number of hours, divided into wind direction and velocity categories, during which precipitation occurred during 1957.
M = missing data

Dir.	2-4	5-7	8-12	13+	Total	2-4	5-7	8-12	13+	Total
N					0				1	1
NE					0	1	2	7	6	16
E		5	2		7		1	5		6
SE			1		1		5	7		12
S					0	1				1
SW		4			4	1		1		2
W	1		1		2	1		1		2
NW					0					0
Total	1	9	4	0	14	4	8	21	7	40
January: calm 0, M. 0					14	February: calm 0, M. 0				40
N			1	2	3		1	2		3
NE		1	3	4	8		2			2
E	1	5	6	4	16		2	6		8
SE		1		2	3	2	3	5	3	13
S			1	1	2			1		1
SW		1	3	3	7				3	3
W	1		5		6				1	1
NW					0				1	1
Total	2	8	19	16	45	2	8	14	8	32
March: calm 1, M. 0					46	April: calm 1, M. 0				33
N			2		2	1		1		2
NE	1			1	2			3		3
E		4	1		5	1	1	3		5
SE	2	5	8	1	16	1	5	3		9
S	1	4			5	5	6	10	8	29
SW	1	2	1		4	1	6	5	6	18
W		3	1		4		2	4		6
NW	1				1		2			2
Total	6	18	13	2	39	9	22	29	14	74
May: calm 1, M. 0					40	June: calm 0, M. 0				74

(continued)

(continued)

Dir.	2-4	5-7	8-12	13+	Total	2-4	5-7	8-12	13+	Total
N			2		2					0
NE			5		5		2	2	2	6
E	1	1			2	1	5	6	1	13
SE	2	11	2	3	18	2	2	2	1	7
S	1	3	2		6	2	1	1		4
SW		7	6		13	1	4	5	1	11
W	1	4	5	1	11		2	2		4
NW		1	3		4	2				2
Total	5	27	25	4	61	8	16	18	5	47
July: calm 0, M. 0					61	August: calm 0, M. 0				47
N			1		1		1			1
NE		2	6		8	1				1
E		2	4		6					0
SE	3	6	10		19	5	6			11
S		3	4	4	11					0
SW	1	3	2	2	8			2		2
W	2		1		3	1		1		2
NW	4	1	1		6	3	2			5
Total	10	17	29	6	62	10	9	3		22
September: calm 3, M. 4					69	October: calm 1, M. 3				26
N					0	1				1
NE		1			1					0
E					0					0
SE	1	1	1		3					0
S		2	4	1	7	1		1		2
SW	1	1		1	3	1	2	2		5
W			2		2	2	3	3		8
NW			2		2		4	1		5
Total	2	5	9	2	18	5	9	7	0	21
November: calm 0, M. 0					18	December: calm 0, M. 0				21
N	2	2	9	3	16					
NE	3	10	26	13	52					
E	4	26	33	5	68					
SE	18	45	39	10	112					
S	11	19	24	14	68					
SW	7	30	27	16	80					
W	9	14	26	2	51					
NW	10	10	7	1	28					
Total	64	156	191	64	475					
Year: calm 7, M. 7					489					

Table 2A-6

ESTIMATED FREQUENCY OF TURBULENCE

Number of occurrences of ratio of wind speed at 125 ft. to wind speed at 30 ft. (R) for three general classifications of turbulence grouped according to wind speed at 30 ft. level (June 1957 - May 1958)

			Wind Speed (MPH) for 30 ft. level						
	n	R	0-1	2-4	5-7	8-12	13+	Total	%
Turbulent	1.000-0.268	0.62-1.25	241	245	193	73	7	759	8.7
Neutral	0.279-0.340	1.26-1.34	0	88	135	75	23	321	3.7
Non-turbulent	0.346-1.000	1.34-4.17	1239	3041	1721	789	88	6858	78.5
						Missing Data			9.1
						Total			100.0

Appendix 2B

LATEST UFTR METEOROLOGICAL DATA
FROM
FLORIDA POWER CORPORATION CRYSTAL RIVER PLANT
AND
GAINESVILLE UTILITIES DEERHAVEN PLANT

Table 2B-1

FLORIDA POWER CORPORATION CRYSTAL RIVER METEOROLOGICAL DATA

FPC - CRYSTAL RIVER 33 FT WINDS DEL T 1/1/75 - 12/31/75

TEMP. LAPSE RATE STABILITY CLASS A
WIND SPEED VERSUS DIRECTION (IN NUMBER OF OBS.)

WIND DIRECTION	WIND SPEED (MPH) AT 10 METER LEVEL 1-3	4-7	8-12	13-18	19-24	>24	TOTAL
NNE	1	17	29	1	0	0	48
NE	0	30	83	15	0	0	128
ENE	1	27	84	23	0	0	135
E	3	37	92	8	0	0	140
ESE	0	6	47	3	0	0	56
SE	0	6	19	4	0	0	29
SSE	0	4	24	7	1	0	36
S	0	6	27	24	5	0	62
SSW	1	4	47	34	4	0	90
SW	0	10	18	17	1	0	46
WSW	1	34	58	7	0	0	100
W	3	105	218	7	0	0	333
WNW	2	32	171	16	7	0	228
NW	2	13	50	16	4	2	87
NNW	2	7	12	0	0	0	21
N	1	23	32	5	0	0	51
TOTAL	17	361	1011	187	22	2	1600

PERIODS OF CALM (NO. OF HOURS) - 0

****

TEMP. LAPSE RATE STABILITY CLASS B
WIND SPEED VERSUS DIRECTION (IN NUMBER OF OBS.)

WIND DIRECTION	WIND SPEED (MPH) AT 10 METER LEVEL 1-3	4-7	8-12	13-18	19-24	>24	TOTAL
NNE	0	0	2	0	0	0	2
NE	1	3	12	3	0	0	19
ENE	0	5	10	0	0	0	15
E	1	6	9	0	0	0	16
ESE	0	1	5	0	0	0	6
SE	1	0	4	2	0	0	7
SSE	0	2	7	3	0	0	12
S	0	6	4	0	0	0	10
SSW	0	3	13	5	1	0	22
SW	0	3	5	3	1	0	12
WSW	1	4	14	0	0	0	19
W	0	11	8	2	0	0	21
WNW	0	6	7	0	0	0	13
NW	0	4	4	3	1	0	12
NNW	1	0	2	2	0	0	5
N	0	5	2	0	0	0	7
TOTAL	5	59	108	23	3	0	198

PERIODS OF CALM (NO. OF HOURS) - 0

****

TEMP. LAPSE RATE STABILITY CLASS C
WIND SPEED VERSUS DIRECTION (IN NUMBER OF OBS.)

WIND DIRECTION	WIND SPEED (MPH) AT 10 METER LEVEL 1-3	4-7	8-12	13-18	19-24	>24	TOTAL
NNE	2	4	4	0	0	0	10
NE	2	8	20	4	0	0	34
ENE	4	7	22	4	0	0	37
E	0	12	16	1	0	0	29
ESE	1	13	16	3	0	0	33
SE	1	7	6	1	0	0	15
SSE	0	9	9	4	0	0	22
S	0	7	11	4	0	0	22
SSW	0	4	20	9	0	0	33
SW	3	3	21	5	0	0	37
WSW	1	16	20	1	0	0	38
W	1	23	23	0	0	0	47
WNW	1	10	16	1	1	0	29
NW	0	5	15	7	3	0	30
NNW	1	5	4	0	0	0	10
N	1	6	13	0	0	0	20
TOTAL	18	144	236	44	4	0	446

PERIODS OF CALM (NO. OF HOURS) - 0

Table 2B-1 (Continued)

TEMP. LAPSE RATE STABILITY CLASS D
WIND SPEED VERSUS DIRECTION (IN NUMBER OF OBS.)

WIND DIRECTION	WIND SPEED (MPH) AT 10 METER LEVEL 1-3	4-7	8-12	13-18	19-24	>24	TOTAL
NNE	5	17	50	4	0	0	76
NE	3	41	153	12	1	0	210
ENE	10	36	64	13	0	0	123
E	9	61	38	2	0	0	110
ESE	8	42	22	5	0	0	77
SE	5	48	46	10	0	0	109
SSE	5	40	37	9	3	0	94
S	3	29	36	25	7	0	100
SSW	4	43	52	43	9	1	152
SW	10	64	117	60	1	0	252
WSW	6	44	85	9	0	0	144
W	7	50	49	15	0	0	121
WNW	8	30	47	18	2	0	105
NW	7	39	46	26	17	0	135
NNW	4	21	22	10	1	0	58
N	5	56	58	6	0	0	125
TOTAL	99	661	922	267	41	1	1991

PERIOD OF CALM (NO. OF HOURS) - 0

****

TEMP. LAPSE RATE STABILITY CLASS E
WIND SPEED VERSUS DIRECTION (IN NUMBER OF OBS.)

WIND DIRECTION	WIND SPEED (MPH) AT 10 METER LEVEL 1-3	4-7	8-12	13-18	19-24	>24	TOTAL
NNE	11	55	47	1	0	0	114
NE	16	81	149	3	0	0	249
ENE	18	168	117	0	0	0	303
E	31	195	39	2	0	0	267
ESE	24	106	45	1	0	0	176
SE	9	142	49	2	0	0	202
SSE	4	42	26	19	0	0	91
S	6	44	53	33	5	1	142
SSW	3	23	39	19	2	1	87
SW	7	20	32	7	0	0	66
WSW	8	36	36	8	0	0	88
W	8	82	51	3	1	0	145
WNW	5	46	37	3	0	0	91
NW	6	33	28	7	2	0	76
NNW	16	61	26	12	0	0	115
N	14	82	65	4	1	0	166
TOTAL	186	1216	839	124	11	2	2378

PERIOD OF CALM (NO. OF HOURS) - 2

****

TEMP. LAPSE RATE STABILITY CLASS F
WIND SPEED VERSUS DIRECTION (IN NUMBER OF OBS.)

WIND DIRECTION	WIND SPEED (MPH) AT 10 METER LEVEL 1-3	4-7	8-12	13-18	19-24	>24	TOTAL
NNE	14	52	22	0	0	0	88
NE	32	46	34	2	0	0	114
ENE	28	172	59	0	0	0	259
E	64	169	5	0	0	0	238
ESE	35	78	13	0	0	0	126
SE	11	85	2	0	0	0	98
SSE	3	18	1	0	0	0	22
S	2	9	2	2	0	0	15
SSW	5	1	2	0	0	0	8
SW	1	1	0	0	0	0	2
WSW	0	0	0	0	0	0	0
W	0	0	1	0	0	0	1
WNW	4	0	0	0	0	0	4
NW	5	4	0	0	0	0	9
NNW	9	17	3	2	0	0	31
N	18	61	15	0	0	0	94
TOTAL	231	713	159	6	0	0	1109

PERIODS OF CALM (NO. OF HOURS) - 4

Table 2B-1 (Continued)

TEMP. LAPSE RATE STABILITY CLASS G
WIND SPEED VERSUS DIRECTION (IN NUMBER OF OBS.)

WIND DIRECTION	WIND SPEED (MPH) AT 10 METER LEVEL 1-3	4-7	8-12	13-18	19-24	>24	TOTAL
NNE	16	20	9	0	0	0	45
NE	18	27	6	0	0	0	51
ENE	18	68	31	0	0	0	117
E	35	72	2	0	0	0	109
ESE	18	34	0	0	0	0	52
SE	8	28	1	0	0	0	37
SSE	2	2	0	0	0	0	4
S	0	2	0	0	0	0	2
SSW	0	0	0	0	0	0	0
SW	0	0	0	0	0	0	0
WSW	0	0	0	0	0	0	0
W	0	0	0	0	0	0	0
WNW	0	0	0	0	0	0	0
NW	1	1	0	0	0	0	2
NNW	2	2	1	0	0	0	5
N	8	25	5	0	0	0	38
TOTAL	126	281	55	0	0	0	462

PERIOD OF CALM (NO. OF HOURS) - 2

Table 2B-2

GAINESVILLE UTILITIES - DEERHAVEN PLANT METEOROLOGICAL DATA

METEOROLOGICAL INPUT DATA FOR THE ANNUAL SEASON

MIXING DEPTH = 1450, METERS
AMBIENT TEMPERATURE = 298, DEGREES, KELVIN
AMBIENT PRESSURE = 1000, MILLIBARS

STABILITY CLASS 1

	WINDSPEED CLASS*					
WIND DIRECTION	1	2	3	4	5	6
N	0.0010	0.0021	0.0	0.0	0.0	0.0
NNE	0.0007	0.0034	0.0	0.0	0.0	0.0
NE	0.0007	0.0017	0.0	0.0	0.0	0.0
ENE	0.0003	0.0031	0.0	0.0	0.0	0.0
E	0.0	0.0031	0.0	0.0	0.0	0.0
ESE	0.0	0.0014	0.0	0.0	0.0	0.0
SE	0.0007	0.0017	0.0	0.0	0.0	0.0
SSE	0.0	0.0017	0.0	0.0	0.0	0.0
S	0.0003	0.0010	0.0	0.0	0.0	0.0
SSW	0.0	0.0003	0.0	0.0	0.0	0.0
SW	0.0003	0.0007	0.0	0.0	0.0	0.0
WSW	0.0	0.0021	0.0	0.0	0.0	0.0
W	0.0003	0.0024	0.0	0.0	0.0	0.0
WNW	0.0010	0.0038	0.0	0.0	0.0	0.0
NW	0.0007	0.0014	0.0	0.0	0.0	0.0
NNW	0.0	0.0014	0.0	0.0	0.0	0.0

*Wind Speed Class
#1 = 1-3 Knots
#2 = 4-6 Knots
#3 = 7-10 Knots
#4 = 11-16 Knots
#5 = 17-21 Knots
#6 = Greater than 21 Knots

Table 2B-2 (Continued)

STABILITY CLASS 2

WIND DIRECTION	WINDSPEED CLASS 1	2	3	4	5	6
N	0.0014	0.0027	0.0027	0.0	0.0	0.0
NNE	0.0007	0.0007	0.0021	0.0	0.0	0.0
NE	0.0007	0.0041	0.0024	0.0	0.0	0.0
ENE	0.0010	0.0024	0.0034	0.0	0.0	0.0
E	0.0014	0.0045	0.0065	0.0	0.0	0.0
ESE	0.0010	0.0034	0.0051	0.0	0.0	0.0
SE	0.0017	0.0017	0.0041	0.0	0.0	0.0
SSE	0.0014	0.0034	0.0045	0.0	0.0	0.0
S	0.0021	0.0010	0.0021	0.0	0.0	0.0
SSW	0.0003	0.0014	0.0021	0.0	0.0	0.0
SW	0.0017	0.0014	0.0041	0.0	0.0	0.0
WSW	0.0021	0.0017	0.0017	0.0	0.0	0.0
W	0.0017	0.0024	0.0072	0.0	0.0	0.0
WNW	0.0007	0.0024	0.0041	0.0	0.0	0.0
NW	0.0014	0.0021	0.0055	0.0	0.0	0.0
NNW	0.0017	0.0027	0.0051	0.0	0.0	0.0

STABILITY CLASS 3

WIND DIRECTION	WINDSPEED CLASS 1	2	3	4	5	6
N	0.0	0.0003	0.0021	0.0007	0.0	0.0
NNE	0.0	0.0010	0.0034	0.0017	0.0	0.0
NE	0.0	0.0010	0.0048	0.0031	0.0	0.0
ENE	0.0	0.0007	0.0038	0.0031	0.0	0.0
E	0.0	0.0007	0.0055	0.0062	0.0	0.0
ESE	0.0	0.0010	0.0068	0.0062	0.0	0.0
SE	0.0	0.0014	0.0038	0.0031	0.0	0.0
SSE	0.0	0.0014	0.0045	0.0021	0.0	0.0
S	0.0	0.0010	0.0038	0.0027	0.0	0.0
SSW	0.0	0.0014	0.0031	0.0021	0.0	0.0
SW	0.0	0.0	0.0027	0.0017	0.0	0.0
WSW	0.0	0.0007	0.0027	0.0024	0.0003	0.0
W	0.0	0.0003	0.0068	0.0058	0.0003	0.0
WNW	0.0	0.0017	0.0024	0.0065	0.0	0.0
NW	0.0	0.0007	0.0031	0.0017	0.0	0.0
NNW	0.0	0.0010	0.0024	0.0010	0.0	0.0

Table 2B-2 (Continued)

STABILITY CLASS 4

WIND DIRECTION	WINDSPEED CLASS 1	2	3	4	5	6
N	0.0010	0.0092	0.0082	0.0003	0.0	0.0
NNE	0.0034	0.0092	0.0120	0.0017	0.0	0.0
NE	0.0038	0.0110	0.0120	0.0072	0.0	0.0
ENE	0.0024	0.0082	0.0161	0.0031	0.0	0.0
E	0.0027	0.0158	0.0168	0.0068	0.0	0.0
ESE	0.0021	0.0123	0.0164	0.0048	0.0003	0.0
SE	0.0038	0.0086	0.0092	0.0055	0.0	0.0
SSE	0.0031	0.0065	0.0075	0.0045	0.0003	0.0
S	0.0041	0.0079	0.0120	0.0065	0.0	0.0
SSW	0.0038	0.0041	0.0075	0.0027	0.0	0.0
SW	0.0021	0.0045	0.0086	0.0051	0.0003	0.0
WSW	0.0034	0.0034	0.0113	0.0079	0.0007	0.0003
W	0.0027	0.0086	0.0236	0.0130	0.0007	0.0
WNW	0.0017	0.0110	0.0072	0.0096	0.0	0.0
NW	0.0034	0.0086	0.0089	0.0041	0.0	0.0
NNW	0.0031	0.0116	0.0120	0.0021	0.0	0.0

STABILITY CLASS 5

WIND DIRECTION	WINDSPEED CLASS 1	2	3	4	5	6
N	0.0096	0.0089	0.0	0.0	0.0	0.0
NNE	0.0079	0.0062	0.0	0.0	0.0	0.0
NE	0.0079	0.0089	0.0	0.0	0.0	0.0
ENE	0.0092	0.0068	0.0	0.0	0.0	0.0
E	0.0096	0.0113	0.0	0.0	0.0	0.0
ESE	0.0096	0.0065	0.0	0.0	0.0	0.0
SE	0.0065	0.0058	0.0	0.0	0.0	0.0
SSE	0.0086	0.0031	0.0	0.0	0.0	0.0
S	0.0065	0.0038	0.0	0.0	0.0	0.0
SSW	0.0082	0.0021	0.0	0.0	0.0	0.0
SW	0.0082	0.0024	0.0	0.0	0.0	0.0
WSW	0.0072	0.0021	0.0	0.0	0.0	0.0
W	0.0082	0.0161	0.0	0.0	0.0	0.0
WNW	0.0103	0.0161	0.0	0.0	0.0	0.0
NW	0.0075	0.0082	0.0	0.0	0.0	0.0
NNW	0.0082	0.0089	0.0	0.0	0.0	0.0

CHAPTER 3

DESIGN OF STRUCTURES, COMPONENTS, EQUIPMENT AND SYSTEMS

Table of Contents

Index of Tables

Table of Figures

3 Design of Structures, Components, Equipment and Systems

This chapter identifies, describes, and discusses the principal architectural and engineering design features of the UFTR structures, systems and components required to ensure UFTR safety and protection of the public. This description is simplified considerably due to the characteristics of the UFTR which is a small unpressurized reactor. The UFTR building and its structural systems are the only features detailed in this chapter, while all the systems dealing directly with the reactor are covered in Chapter 4.

3.1 Design Criteria

3.1.1 Structural Design

The reactor building, pictured in Figure 3-1, is a "vault-type" building as defined in 10 CFR 73.2 (o). The reactor building is divided into two distinct parts based upon the difference in utilization and construction. The overall reactor building measures approximately 60 ft. by 80 ft. inside as depicted in Figure 3-2. The reactor or cell area is 30 ft. by 60 ft. with 29 ft. of head room, located at the north end of the building. The rest of the building is used for research and teaching laboratories, faculty and graduate student offices and work areas. The current floor plans for both levels of the building are shown in Figures 3-2 and 3-3 which includes a number of features primarily aimed for improving area utilization and control.

The office laboratory section of the building is well constructed of standard approved materials to serve multifaceted needs of engineering education, research, training and service activities.

Some relatively minor alterations have been made to the first floor and the second floor of the UFTR building since its first license. None of these changes is considered to impact reactor safety; where considered necessary these changes have been documented in facility reports. None of the changes is considered to have affected the structural integrity and inherent safety features of the reactor building. These changes have been made merely to facilitate building utilization in response to needs of building occupants.

[

] The walls of the room are constructed of monolithic reinforced concrete, one foot thick, resting on mat footings. The inside walls of rooms 5, 5A and 6 are coated with 7 mils-thick vinyl-epoxy paint. The floor is a concrete slab resting on undisturbed or compacted earth, as was deemed necessary depending on test boring results. The floor slab has a minimum thickness of one foot, and is increased under the reactor to 18 in. It is designed for a maximum load of 3,000 lbs. per square ft.

at the reactor and at least 1,500 lbs. per square ft. over the rest of the area. The floor slab is damp proofed with a barrier of two plies of 15 lbs., felt mopped in place with hot asphalt between the base slab and top slab. All the slab junctions with vertical surfaces are provided with sixteen-ounce copper water stops. These junctions are calked with pre-molded mastic filler and hot-poured paraplastic seals.

The roof of the reactor is built-up with a 3 in., precast roof tile tarred felt and pitch with a 2-in. of rigid fiberglass insulation boarded and sealed with 5-ply tarred felt pitch with slag covering. The roof of the reactor room is supported on No. 166 steel-bar joists spaced 2 ft. on centers.

The reactor rests on a 16 in. high concrete pedestal in order to raise the beam holes to a convenient 40 in. working level and to support the reactor. A concrete service trench, 5 ft. wide by 2 ft. deep, extends from under the reactor to an equipment pit, measuring 5 ft., 3 in. by 13 ft., 6 in. by 6 ft. deep, located adjacent to the reactor.

The reactor control room area (Room # 6), housing the reactor console, is located in the southeast corner of the reactor room inside the reactor cell. A plexiglass wall is provided around the control area to give maximum visibility from the control console to the reactor cell and to isolate this area from the rest of the reactor cell.

[

]

[

]

[

] The door is 10 ft wide by 12 ft. high, four-paneled, steel-skinned, honeycombed construction, and hinged door. The sill, jambs, astragals and head have sponge-rubber seals and caulking to minimize leakage. [

]

The reactor with shielding is an elongated octagon located in the center of the 30 ft. dimension of the room, 12 ft. from the West end. It has an East-West axis of 20 ft., 4 in. and a North-South axis of 15 ft., 6 in. The clear floor dimensions around the reactor shielding are summarized in Table 3-1.

An air-conditioning equipment platform with 10 ft. by 11 ft. dimensions is located in the northeast corner of the reactor cell. It is built 10 ft. above the floor to provide ample head room for equipment and personnel working under it.

A 3-ton bridge crane is provided for handling shield blocks, lead casks and other heavy equipment; the hoist travel allows coverage of the entire area of the reactor room. Adequate clearance is provided to permit the use of equipment necessary for fuel transfer operations and for the installation of any experimental equipment which might be desired. The clearance over the water tank is sufficient for the lead cask used to remove irradiated fuel elements from the reactor. A balcony over the control room serves as a shield preventing any damage to the control room from the crane hook or heavy objects being moved with the crane. It also serves as an access maintenance area for the crane.

[

]

There are convenience outlets (115 V) and a 208V, single-phase outlet on the walls of the room. Tap water is available in the vicinity of the equipment pit shown in Figure 3-2. A utility sink is also located in the Northwest corner of the reactor cell. A utility room (A/C Equipment room), where service equipment for the building is stored, is located outside the Northwest corner of the reactor cell.

The Stack Dilute Fan Room, east of the AC Equipment Room, contains the 10,000-cfm (minimum) flow rate fan to provide dilution for air coming from the reactor, and a brick flue to carry the exhaust air above the top of the building.

The number of penetrations through the reactor-room walls, floor and ceiling has been kept to a minimum. Table 3-2 identifies significant penetrations and gives the location of each. All penetrations with the exception of six items (2, 3, 10, 13, 14, and 15)

are nonmovable installations, either poured-in-place or sealed with neoprene, mastic or similar gaskets.

3.1.2 Overall Requirements

The UFTR is an already operating facility and quality standards and records for the structures, systems and components important to safety have been reported in the past. These records are kept and stored by those responsible for assuring UFTR safety. Testing and maintenance of the existing UFTR facilities continue to have their quality assured as in the past; maintenance and testing quality assurance records are kept in accordance with previously established procedures which have been found acceptable by the NRC Regulatory Guide 2.5[1]

Several features reduce the likelihood and the consequences of a fire. Conventional smoke and fire detection equipment is available throughout the reactor building. Three hard welded CO2 extinguishers are located in the reactor cell / control room. A fire hose and fire extinguisher are located outside the control room in the ground floor foyer. Additional fire extinguishers are located throughout the building. Since the construction materials are predominant nonflammable, such as concrete blocks, bricks and floor tile, a serious fire is considered to be very unlikely. An automatic four zone fire alarm monitoring system, connected through a computerized system to the Campus Police, provides adequate fire monitoring capabilities for the entire building. For additional information on Fire Protection refer to Chapter 9, Section 9.3.

3.1.3 Protection of Multiple Fission Product Barriers

The UFTR principal physical barrier to fission product release is the fuel cladding. Safe reactor operation is guaranteed by safety limits set to ensure fuel cladding integrity. These limits were set to maintain the fuel temperature below 200°F (refer to Chapter 4 and 14 for further details), which is well below the temperature at which fuel and cladding degradation occur.

Accident analyses presented in Chapter 13 show that under credible accident conditions, the safety limit on temperature of the reactor fuel will not be exceeded. Consequently, there would be no fission product release that would exceed 10 CFR Part 20 allowable radioactivity concentrations.

To ensure that a reactor shutdown can be accomplished even with the most reactive blade stuck out of the core, a minimum shutdown margin was established to be no less than 2% $\Delta k/k$ as presented in Chapter 4. Safe reactor shutdown and continued safe conditions are also assured by limiting safety system settings (LSSS) or automatic protective devices related to variables having significant safety functions. These LSSSs, presented in Chapter 14, ensure that automatic protective actions are initiated before

exceeding a safety limit e.g. primary coolant temperature above 155°F, decrease in coolant flow rate etc.

Because of the fuel material and core design, the fuel and moderator temperature reactivity coefficients are negative assuring inherent protection. Routine steady-state power operation is performed with the regulating blade partially withdrawn. Reactivity insertion rate is also limited such that the period does not exceed 10 sec.

Due to the small dimensions of the core and low power levels, Xe-135 cannot cause spatial oscillations in the neutron flux or power; furthermore, the reactor scrams if power reaches the LSSS of 125 kW.

The reactor instrumentation monitors several reactor parameters and transmits appropriate signals to the regulating system during normal operation and during abnormal and accident conditions to the reactor trip and safety systems. The safety-related instrumentation and controls of the UFTR include the control console, the control and safety channels, the interlock system, control blade drive switches, and the reactor scram circuitry. Two channels of neutron instrumentation provide the UFTR with independent, separate neutron monitors of the reactor power level. Non-nuclear instrumentation channels also allow monitoring the normal operation of the various systems. The safety system modules operate on a 1 out of 1 protection system logic. Manual or automatic power-control modes are available, and automatic radiation monitoring alarms are provided by reactor sector and air particulate radiation monitoring systems.

Interlocks prevent the movement of the control blades in the up direction under the following conditions:

- Source count rate level below minimum count;
- Two control blade up switches depressed at the same time;
- Reactor period less than 10 seconds;
- Calibration switches not in operate condition;
- Attempt to raise power in automatic on a period faster than 30 sec.

The UFTR coolant system is very simple since it works at ambient pressure and low temperatures (below 155 °F). The primary coolant system transfers the heat from the reactor to the heat exchanger. The heat is removed by the secondary coolant system to the storm sewer with no mixing of water between the two systems. The secondary system water pressure is maintained slightly higher than the primary system. Leakage from the secondary system to the primary system leads to an increase in the water resistivity which is detected by the conductivity cell located before the purification system. Integrity of piping is also checked through flow measurement instruments. Any change beyond the LSSSs for the coolant flow rate, or temperature of the primary coolant causes the shutdown of the reactor.

Because of the low fuel inventory, the UFTR does not require containment.

Electric power to UFTR is the same one that supplies the whole university. The system is failsafe in design and electrical power is not needed for any positive safety function but only for monitoring devices for which battery power is available.

3.1.4 Protection and Reactivity Control System

The reactor protection system has been designed to initiate automatic protective actions to assure that fuel design limits are not exceeded by anticipated operational occurrences or accidents. Automatic actions are initiated by the two nuclear power channels and by a non-nuclear channel, leading to two types of trips:

- Full trip: Nuclear instrumentation induced trips which involve the dumping of the primary water plus the standard drop of control blades; and
- Blade-drop: Process instrumentation induced trips which involve the gravity drop of the control blades without dumping the primary water.

The control blades are "fail-safe" in the sense that they will drop into the core by gravity in the event of a loss of power. The reactor protection system provides a series of control blade interlocks and reactor scrams preventing the occurrence of situations which might endanger the integrity of the reactor system and assuring its safe operation as discussed in Chapter 7.

The UFTR has four independent control blades: three safety blades and one regulating blade. Each of the blades has its own independent drive mechanism and control circuit and they are operated individually. The regulating blade is used to control power either manually or by automatic control. Upon receipt of a scram signal, all four blades are dropped by gravity into the core. No control or safety system is required to maintain a safe shutdown condition.

The total worth of the blades is more than adequate to maintain the core at a subcritical level with the most reactive blade stuck out of the core.

Emergency core cooling capability is not required for the UFTR. Loss of coolant does not lead to an accident, since the UFTR shuts itself down due to the negative moderator void coefficient. Supporting analysis is presented in Chapter 13.

3.1.5 Fluid Systems

The fuel plates are arranged into six aluminum boxes filled with water and surrounded by reactor grade graphite. These fuel boxes are subjected only to ambient conditions as well as all the components containing primary coolant system (coolant storage tank, purification system and heat exchanger).

The fuel boxes are surrounded by graphite and concrete blocks, which prevent external forces from being directly transmitted to the fuel boxes and preclude movement

of the boxes. Valves, coolant storage tank, purification system, heat exchanger are located in the equipment pit and are readily accessible for periodic inspections.

The UFTR operates at low powers and temperatures as well as low neutron fluence levels and no significant change in material properties is expected.

Residual heat removal is not necessary. Calculations have been performed (Chapter 4 and 13) to show that the fuel temperature will not reach the safety limit even under loss of coolant.

3.1.6 Confinement Design Basis

The reactor building is a "vault-type" building, the roof of the reactor is built-up of a precast roof tile as described in Section 3.1.1. The entire structure is exposed only to normal external environmental conditions and internal environmental conditions are maintained at regulated conditions.

There is no requirement for primary containment isolation. Penetrations through the reactor-room walls, floor and ceiling have been kept to a minimum as presented in Section 3.1.1. They have no effect on the safety of reactor operations.

The reactor building is the confinement. The reactor cell has an independent ventilation and air-conditioning system. The reactor vent effluents are discharged through the reactor stack. The activity of the gaseous effluent release is continuously monitored during reactor operation. If the vent flow activity reaches a preset level, an alarm is actuated and the operator takes the appropriate actions according to approved procedures.

3.1.7 Fuel Radioactivity Control

Any liquid waste from the UFTR is dumped, drained or pumped into the waste holdup tanks. These liquids are periodically analyzed for radioactivity and disposed of according to approved procedures.

Irradiated fuel is stored in the spent fuel storage area located in the concrete floor at the northwest corner of the reactor cell. These storage pits are arranged so that k_{eff} will be less than 0.8 under optimum conditions of reflection and moderation. Cooling is not required due to low burnup of the UFTR fuel. Shielding is provided by the concrete around the pits. Handling of the fuel is performed in accordance with approved procedures as described in Chapter 9.

New fuel is stored in a criticality-safe configuration in the fuel storage safe located in the reactor cell. The fuel storage safe is locked at all times except during

transfer of fuel or inventory activities. These elements require no special handling arrangements or radiation shielding.

3.2 Meteorological and Water Damage

Tsunamis and seiches do not occur in Alachua County. Hurricanes and tornadoes have a relatively low probability of occurrence in Alachua County and since the UFTR is a self-protected and isolated low-power system with a low fission-product inventory, no further criteria were established for the UFTR structure. The maximum consequence of tornadoes or hurricanes that would reach regions near the UFTR is an increase in the precipitation due to the formation of tropical storms, which could lead to flooding.

From accumulated experience at the UFTR site, it has been established that no flooding conditions (water intrusion into the cell) will exist at the UFTR site from an accumulated precipitation of 8" of rainfall in a 24-hour period [2]. A heavy rain recorded for a 24-hour period occurred in September, 1964, under the effects of Hurricane Dora which caused approximately 11 inches within a 4-day period. Flooding did not occur at the UFTR site or any other area of the University of Florida campus, while flooding was reported in the Southwest area of greater Gainesville which is at lower elevation than the UFTR location. The drainage system has been much improved since that time; therefore, it is estimated that no major flood will occur in the city of Gainesville or anywhere near the UFTR site. In the unlikely event that the U.S. Weather Bureau gives a significant probability of a hurricane or other severe storm to produce an accumulated rain fall of more than 8 inches of rain in a 24-hour period, UFTR personnel will proceed according to an approved procedure for addressing potential flooding conditions.

3.3 Seismic Damage

As stated in Section 2.5.1.2, Florida is a relatively inactive area for seismic activity and no criteria for earthquake have been established for the UFTR structure.

3.4 Systems and Components

The UFTR does not have structures, components, or systems that are important to safety in the same context as nuclear power plants. For the UFTR, a failure of the protection system or any credible accident does not have the potential for causing off-site exposure comparable to those listed in the guidelines for accident exposures of ANSI/ANS 15.7 [3]. However, the UFTR structure was designed to withstand natural phenomena as previously discussed.

Table 3-1 Reactor Dimensions and Clearance

1.	Room	Dimensions (Inside)
(a)	East-West	60 ft.
(b)	North-South	30 ft.
(c)	Height (Clear)	29 ft.
2.	Reactor	Dimensions
(a)	East-West	20 ft., 4 in.
(b)	North-South	15 ft., 6 in.
(c)	Height Above Floor (To Reactor Top)	11 ft., 10½ in
(d)	Height Above Floor (To Top of Water Tank)	14 ft., 10½ in.
3.	Clearances	Dimensions
(a)	West End (Water Tank)	12 ft., 0 in.
(b)	North Side (Pit)	7 ft., 3 in.
(c)	East End (Thermal Column)	27 ft., 5 in.
(d)	South Side	7 ft., 3 in.
(e)	Corner Beam Tubes	9 ft. to 10 ft.
(f)	East End to Control Room	13 ft., 3 in.
(g)	Overhead (Crane Hook to Reactor Top)	11 ft., 9 in.
(h)	Overhead (Crane Hook to Water Tank)	8 ft., 9 in.
(i)	Overhead (Bottom of Bridge Beam to Reactor Top)	15 ft., 1 in.

Table 3-2 Significant Penetration in UFTR Reactor Cell

[

]

[

]

Figure 3-1 University of Florida Training Reactor Facilities – East Face Cutaway View

[

]

Figure 3-2 First Floor Plan for the University of Florida Training Reactor Building

[

]

Figure 3-3 Second Floor Plan for the University of Florida Training Reactor Building

REFERENCES:

1. NRC, Nuclear Regulatory Commission, *Regulatory Guide 2.5, Revision 0-12.* May,1977.
2. NRE, Department of Nuclear and Radiological Engineering. *"Standard Operating Procedures of the University of Florida Training Reactor".* 2000, University of Florida: Gainesville, Fl.
3. ANS-15.7, *Guide for Research Reactor Site Evaluation Draft Proposed Standard.* 1975.

CHAPTER 4

REACTOR DESCRIPTION

Table of Contents

Index of Tables

Index of Figures

4 Reactor

4.1 Summary Description

4.1.1 General Reactor System Description

The UFTR is a research and training reactor of the general type known as the Argonaut with modifications made by the General Nuclear Engineering Corporation of Dunedin, Florida, to adapt it to a university program by improving shielding and minimizing the possibility of an accident. The UFTR has been operational since May 1959. Originally licensed for operation up to 10 kW, the UFTR is currently licensed for operation at 100 kW (thermal) under License Number R-56, Amendment 8, and effective January 28, 1964. All similar Argonaut research reactors in USA have been shutdown; they were located at the University of Washington, University of California at Los Angeles (UCLA), Iowa State University and at Virginia Polytechnic Institute. A similar Argonaut research reactor is in operation at "Universite of Strasbourg" France [1]. Other similar facilities include the MTR, BSTR, Borax I, II, and III [2].

The UFTR is heterogeneous in design, using 93 percent enriched uranium-aluminum fuel elements. Cutaway longitudinal and transverse sectional views of the UFTR including shielding are shown in Figures 4-1 and 4-2. A horizontal section of the UFTR at the beam tube level is shown in Figure 4-3. An isometric of the UFTR with shielding removed is shown in Figure 4-4. These four figures serve to indicate how the reactor is generally set up but especially the diverse experimental applications available with the UFTR. An isometric diagram of UFTR components including control rod drive system and control rod shrouds, overall fuel box arrangement with covers, deflectors and shield plugs, coolant lines, graphite stringers, and shield test tank is presented in Figure 4-5. Figure 4-5 provides an excellent description of the interconnection of the various basic components that constitute the UFTR.

As indicated, the thermal power level of the UFTR is currently limited to 100 kW (thermal) with water used as a coolant and also as part of the moderator; the remainder of the moderator consists of graphite blocks which surround the boxes containing the fuel plates and the water moderator as indicated in Figures 4-1 through 4-5. The fuel is contained in MTR-type plates assembled in bundles. Each bundle is composed of 11 fuel plates, each of which is a sandwich of aluminum clad over a uranium-aluminum alloy "meat".

The reactor core has a two-slab geometry and it is presently composed of 21 fuel bundles plus three (3) dummy bundles arranged in six water filled aluminum boxes which are surrounded by reactor grade graphite.

The primary coolant (de-mineralized water) is pumped upward over the fuel plates and then fed by gravity through the side orifices to the heat exchanger where the

primary coolant transfers the heat from the reactor. The heat is removed the by the secondary coolant through the heat exchanger to the storm sewer.

The reactor is equipped with four control blades (3-safety and 1-regulating) of the swing-arm type consisting of four cadmium vanes protected by magnesium shrouds as shown in Figure 4-5. The control blades operate by moving in a vertical arc within the spaces provided between the fuel boxes. These blades are moved in and out by mechanical drives or they may also be disconnected by means of electromagnetic clutches and allowed to fall by gravity into the reactor. The drives, which are connected, to the blades by means of long shafts are located outside the reactor shield for accessibility as shown in Figure 4-4.

The maximum reactivity addition rate of the safety and control blades is limited to 0.06% $\Delta k/k$/sec by system design to prevent sudden large reactivity increases. Such a limitation insures the integrity of the fuel and other systems; essentially this limit assures that there can be no chance of prompt critical operation.

The nuclear design of the core will insure that the combined response of all reactivity coefficients and an increase in reactor power yields a net decrease in reactivity, as discussed in the safety analysis of Chapter 13.

The operation of the reactor is monitored and controlled from a desk-type console. The console displays all the pertinent data such as control blade positions, reactor period, reactor power level, coolant temperature and other information necessary for safe operation and control of the UFTR.

Reactor instrumentation consists of three neutron flux channels, control blade position indicators, the electrical interlock system, control blade selector and drive switches, and the reactor scram circuitry. The reactor instrumentation is discussed in Chapter 7, Instrumentation and Controls.

The experimental facilities in the UFTR include:

1. Sixteen (16) vertical foil slots placed at intervals in the graphite between the fuel compartments, each are 3/8 in. by 1 in.;

2. Three (3) vertical experimental holes of 1-1/2 in. in diameter located centrally with respect to the six fuel compartments;

3. Five (5) vertical holes 4 in. by 4 in.;

4. A thermal column having 4 in. by 4 in. removable stringers;

5. A shield tank is placed against the west face of the reactor opposite the thermal column;

6. Six (6) horizontal openings 4 in. in diameter are found on the center plane of the reactor;
7. A horizontal throughport which is an approximately 1.88 in., ID pipe with 20 ft. length running east-west across the reactor.

Shield plugs are normally inserted in these facilities except where an experiment or test requires otherwise.

The core mechanical design is presented in Section 4.2; the core nuclear design is summarized in Section 4.5; key thermal and hydraulic design considerations are presented in Section 4.6.

4.1.2 Design and Performance Characteristics

The principal design and performance characteristics for the UFTR are summarized in Table 4-1. The UFTR self-limits the maximum power and energy release in an accidental nuclear excursion or loss of coolant accident by means of either the negative moderator void coefficient or the negative temperature coefficient. These inherent nuclear control features are effective if the control rods or the instrumentation, which is part of the reactor protection system fail, or if the operator mistakenly or deliberately violates established operating procedures and rules. The worst situation occurs if a large amount of reactivity is added suddenly. The maximum excess reactivity for the UFTR is limited with the present fuel loading to approximately 2.3% $\Delta k/k$. Calculations made by Listing [3] have shown that the necessary reactivity required to raise the temperature of the fuel plates to the melting point is about 2.4% $\Delta k/k$. More recent calculations presented in the NUREG/CR-2079, Analysis of Credible Accidents for Argonaut Reactors [4] shows that this limit is higher where 2.6%$\Delta k/k$ results in fuel temperatures still well below the melting point; therefore, there is no danger of fission product release or damage to the structural integrity of the reactor due to a large addition of reactivity into the system. Reactivity accidents are discussed further in Chapter 13.

Reactivity control is provided by the three control blades and one regulating blade described in Table 4-1. Table 4-1 also shows the corresponding reactivity worth for each blade, along with the maximum allowed reactivity addition rate for the UFTR. The shutdown margin available with the most reactive blade out is 2.99% $\Delta k/k$. The control blades are "fail safe" in the sense that they will drop into the core by gravity in the event of a loss of electrical power. The reactor protection system provides a series of control blade interlocks and reactor scrams preventing the occurrence of situations, which may endanger the integrity of the reactor system, and assuring its safe operation as discussed in Chapter 7 – Instrumentation and Control.

Temperature limits are not considered to present any problems during reactor operation at 100 kW (thermal). At 100 kW (thermal), the equilibrium inlet temperature is found to be 86 ± 2°F and the equilibrium outlet temperature is 103 ± 2°F when using the

main secondary cooling system and increased by ~40°F when the back-up secondary cooling system is used.

4.2 Reactor Core

This section presents design information and analyses, where appropriate, to evaluate the major core components.

4.2.1 Fuel System Design

The reactor core has a two slab geometry; it is presently composed of 24 fuel bundles where up to three (3) of these bundles can be replaced by dummy bundles (labeled "D"). The fuel/dummy bundles are arranged in six (6) water filled aluminum boxes, surrounded by reactor grade graphite as shown in Figure 4-6.

The arrangement of the fuel bundles in the fuel boxes is illustrated in the isometric of the fuel boxes shown in Figure 4-7. The coolant inlet and outlet positions are also shown in Figure 4-7 along with the positions of the shield plug and fuel support components for each fuel box.

The fuel elements are fabricated from 93 % enriched uranium-aluminum alloy, and each bundle is composed of 11 fuel plates. Each plate is a sandwich of aluminum cladding over uranium-aluminum alloy "meat" as illustrated in Figures 4-8 and 4-9. The UFTR fuel is of the MTR type with characteristics as indicated in Table 4-2.

A sheet of 0.04 in. thick uranium-aluminum alloy sandwich is placed between the 0.015 in. thick aluminum clad plates. Each plate is 25.625 in. long, 2.845 in. in width, having a total thickness of 0.07 with approximately [ ] of U-235. The detailed fuel cell geometry is presented in Figure 4-10. A 0.137 in. spacing is provided between fuel plates for coolant flow as indicated in the detailed cell geometry shown in Figure 4-10.

In order to achieve a particular desired excess reactivity capability in the core, full or partial dummy aluminum bundles are placed in the configuration as illustrated in Figure 4-6. The dummy plates are composed of aluminum. A partial dummy bundle is composed of 5 dummy plates and 5 fuel plates. The UFTR is presently licensed to have up to 2.3% $\Delta k/k$ excess reactivity, which would require approximately a full fuel load with no dummy elements. The present configuration has two and a half dummy bundles. The actual available excess reactivity in the present configuration is about 1% $\Delta k/k$.

4.2.2 Functional Design of Reactivity Control System

Reactivity control of the UFTR is provided by four control blades, (3 safety and 1 regulating), as previously illustrated with their drive mechanisms in Figures 4-4 and 4-5.

Reactor shutdown can also be accomplished by voiding the moderator/ coolant from the core. Two independent means of voiding the moderator/coolant from the core are provided:

(a) water dump via the Primary Coolant System Dump Valve opening under Full Trip conditions,

(b) water dump via the rupture disk breaking under pressure conditions above the design value.

4.2.2.1 Control Rods

The usual detailed information on control rod system structural materials is not included here since the control rod systems are previously operated systems. They have been designed and installed to meet licensing requirements previously. The basic construction and materials that make up the control blades are presented below.

The blades are of the swing-arm type consisting of four cadmium vanes protected by magnesium shrouds; they operate by moving in a vertical arc within the spaces between the fuel boxes as illustrated in Figure 4-11. A sketch of the control blade and drive mechanism is also presented in Figure 4-12, while actual dimensions are presented on the drawings in Figure 4-13 and 4-14. The shroud is made of Magnesium and the blades are made of aluminum tipped with Cadmium.

Blade motion is limited to a removal time of at least 100 sec. and the insertion time trip conditions is measured to be less than 0.4 sec. The reactor blade withdrawal interlock system prevents blade motion, which will exceed the reactivity addition rate of 0.06%$\Delta k/k$ per second, as specified in the UFTR Technical Specifications. The control blade drive system consists of two-phase fractional horsepower motor that operates through a reduction gear train, and an electrically energized magnetic clutch that transmits a motor torque through the control blade shaft, allowing motion of the control blades. The blades are sustained in a raised position by means of this motor, acting through the electromagnetic clutch. Interruption of the magnet current results in a decoupling of the motor drive from the blade drive shaft, causing the blades to fall back into the core. Position indicators, mechanically geared to the rod drives transmit rod position information to the console. Circuitry associated with control blade movement is presented and discussed in Chapter 7.

4.2.3 Neutron Moderation and Reflector

Neutron moderation is achieved by water in the fuel box which also acts as a coolant. Surrounding the fuel box there are graphite blocks that also acts as moderator.

The reflector is rectangular-shape composed of blocks that surround the core. The graphite blocks are arranged in layers as presented in Figure 4-4. Positioning of fission,

ion chambers and experiments are allowed through vertical and horizontal grooves in the graphite. The water shield tank located at the west side end of the reactor also acts as a reflector.

Because of aging effects, it is hoped to be able to load new reactor grade graphite into the UFTR core. This change is not expected to impact the reactor core.

4.2.4 Neutron Startup Source

The present permanent regenerable 25 Ci antimony-beryllium (SbBe) neutron source should continue to be more than sufficient when charged by reactor operation. However, there is also a removable 1 Ci PuBe source which is available and also approved for use as needed.

The location of the SbBe neutron source is shown in Figure 4-15. The PuBe source may be inserted in the reactor through the vertical ports and is removed from the reactor before the reactor exceeds 10 W and preferably at no higher than 1 watt, as established in the UFTR Standard Operation Procedures SOP-A.2 "Reactor Startup".

4.2.5 Core Support Structure

The majority of the UFTR support and other structures are made of aluminum or concrete. The mechanical and nuclear properties of these materials will continue to be adequate for the operating conditions since the neutron flux level and temperatures in the core are very small when compared to nuclear power reactor.

4.3 Reactor Tank

The core of the UFTR is composed of six aluminum tanks as presented in Figures 4-6 and 4-7. Concerning the low creep strength of the aluminum which makes it unsuitable as structural material at temperatures above 572°F [5], the UFTR safety limit continues to restrict fuel temperatures to remain below 200°F, assuring a continuing large margin to the temperature at which creep occurs in aluminum.

Graphite, concrete and water shield tank around the fuel boxes provide the necessary shielding as discussed in section 4.4 and Chapter 11.

The UFTR core was disassembled in late 1998 and returned to normal operation in middle August 1999. During this inspection no abnormalities were observed in the fuel boxes. The fuel boxes are expected to be more than adequate to continue operating in the UFTR.

4.4 Biological Shielding

Biological shielding is provided around the UFTR to minimize the exposure to any individual working with the reactor to levels as low as reasonably achievable (ALARA) and as specified by 10 CFR 20. The biological shielding is made of cast-in-place concrete with sections of barytes concrete carefully located to reduce the overall shield thickness while assuring its effectiveness. As specified in Table 4-1, the shielding consists of the following:

6 ft. cast-in-place barytes concrete found at the center sides;
6 ft. 9 in. cast-in-place barytes concrete at the end sides; in the middle are barites concrete blocks;
5 ft. 10 in. barytes concrete blocks at the top;
3 ft. 4 in. barytes concrete blocks at the end.

Access to the ends and top of the reactor is provided by removal of ordinary concrete blocks cast to fit the openings. These blocks, weighing up to 4,500 lbs. each, have pick-up plugs so that they may be handled by means of the overhead bridge crane. The arrangement of these movable blocks is illustrated in the section views of the UFTR shown in Figures 4-1 through 4-3.

UFTR reactor cell is monitored by three area monitors which supply indication in the control room that there is an unusual radiation level in the reactor cell – 2.5 mr/hr or there is a radiation level of 10 mr/hr that requires response. Although no detectable change or damage occurs to living organisms below about 25 r, the level of 10 mr/hr is considered an abnormal condition for the UFTR. If two if the radiation monitoring units alarm at 10 mr/hr, an automatic evacuation alarm initiates and the air conditioning unit, core vent fan and diluting fan trip. The shutdown of the two fans also causes the reactor to trip.

Radiation measurements around the UFTR performed quarterly also indicates that the maximum radiation level occurs at the NW and SW of the reactor at levels of 7 mr/hr at 1' from the reactor wall. Measurements at different points of the restricted area are presented in Chapter 11.

4.4.1 Shielding calculations

Several approximate calculations with results performed to estimate the relative importance of prompt, delayed, and capture gammas for the 100 kWth UFTR power level are presented in this Section. All the required information to perform these calculations and the corresponding results obtained are included in Table 4-3 [6]. The prompt fission gamma rays are considered first. The prompt source spectrum used for these calculations is presented in Table 4-3. To compute the fraction of these gammas which escape the fuel box region of the UFTR core, both fuel slabs are considered as one homogenized slab at the center of the core. Volume-weighted, energy-dependent, energy absorption

coefficients [7] are then used in conjunction with results of Case [8] to determine fuel slab escape probabilities calculated using the chord method. These probabilities are also presented in Table 4-3. The fraction of prompt gammas escaping the fuel for each energy group is then separately treated as a point source; this treatment is a good approximation since the source width is much less than the attenuation distance. The resultant UFTR reactor-shielding model shown in Figure 4-19 allows simple exposure calculations to be performed for the north and south faces of the concrete through use of Equation 4-1:

$$\dot{D}_{A_P^+} = \frac{BS\,e^{-b}}{4\pi r^2 K} \qquad \textbf{Equation 4-1}$$

where:

$\dot{D}_{A_P^+}$ = exposure rate at point P (mR/hr);

$b = \sum_{i=1}^{n} \mu_i t_i$

μ_i = energy absorption coefficient for gamma rays in group 1 in the shield material (cm^{-1});

ti = shield thickness (cm);

n = number of energy groups--four here;

S = strength of point source (MeV/sec);

r = distance from source to point P (cm).

B = buildup factor

K = conversion factor (MeV/cm2-sec to mR/hr).

Equation 4-1 is applied for each gamma energy group to obtain the results outlined in Table 4-3. Buildup is considered only for the barytes concrete sections since it is heavier and larger than the preceding shielding material [9].

Application of the same calculational method shows that the delayed gammas resulting from fission product decay make a negligible contribution to the exposure rate at point P. This is true for the UFTR since its equilibrium fission product buildup corresponds to an average operating history of no more than one kWth.

A possible method to reduce the prompt core gamma exposure at point P is to add about six inches of polyethylene shielding containing 1 percent boron and 80 percent lead (Poly-B-Pb) in the air gap depicted in Figure 4-16. The resultant exposure rates calculated using Equation 4-1 is significantly reduced as indicated in Table 4-3.

Capture gamma rays produced within shielding materials can represent a significant portion of the radiation hazard for a reactor. For the UFTR this problem arises mainly from thermal neutron capture in the barytes concrete, since capture gammas from the graphite are negligible. [7] To evaluate the exposure rate at point P due to this effect, Equation 4-2 is used: [7]

$$\dot{D}_{A_P^+} = \frac{\sum_a E\phi_0 \exp(\mu_e T/2)}{2K\left[\lambda + \frac{\mu_e}{2}\right]} \left| \begin{array}{l} \exp(-\lambda - \frac{\mu_e}{2}) * T * E_1 \left\{ (\mu T - \mu x)(1 - \frac{\lambda + \frac{\mu_e}{2}}{\mu} \right\} \\ - \exp(-\lambda + \frac{\mu_e}{2}) * E_1(\mu T - \mu x) \end{array} \right|_{x=0}^{(T-\varepsilon)}$$

Equation 4-2

where:

$\dot{D}_{A_P^+}$ = exposure rate at point P (mR/hr)

$\sum_a$ = thermal neutron absorption cross section in barytes concrete = 0.0197 cm^{-1} [10]

E = energy of capture gamma rays = 7.2 MeV

ϕ_o = thermal neutron flux density at inner face of barytes concrete = 2.9 E+10 n/cm^2 sec

μ_e = energy deposition coefficient of gamma rays in barytes concrete = 0.0857 cm^{-1} [10]

μ = energy deposition coefficient of gammas in water = 0.046 cm^{-1} [7]

T = thickness of barytes = 182.88 cm

K = conversion factor = 946 $MeV/cm^2sec/mR/hr$ [7]

λ = attenuation factor for thermal neutron flux in barytes concrete = 0.125 cm^{-1} [10]

$$E_1(Y) = \int_y^{\infty} \frac{e^{-x}}{x} dx$$

ε = incremental value > 0; required to keep $E_1(y)$ finite

Equation 4-2 assumes the attenuation of neutrons in the barytes is represented by: $\phi = \phi_o \exp(-\lambda t)$ with an energy buildup factor. ϕ_o, is found from the neutron flux computer calculations discussed Section 4.5.1 and represents the total neutron flux in energy group 4. The assumption E = 7.2 MeV is a conservative approximation to the capture gamma spectrum for concrete. (39) Using $(T-\varepsilon) = 0.9T$ and the fact that $E_1(-y) = -E_i(y)$ [7], where these values are tabulated in Reference [11], the exposure rate at P due to capture gamma-rays in the barytes concrete is found to be 7.9 mR/hr. The accuracy of the approximations used in Equation 4-2 is difficult to evaluate; therefore, it is assumed that this value represents an upper limit for the capture gamma radiation level. Again, the effect of adding six inches of Poly-B-Pb between the core graphite and the barytes is evaluated. Since the attenuation of the thermal flux would be of the order of 10^{10}, with low energy (0.42 MeV) gamma-rays being associated with the neutron capture process [12], it is expected that capture gamma radiation at point P would be negligible.

Radiation measurements at the north and south faces of the reactor show that the actual exposure level is approximately 3 mR/hr for 100 kWth operation, well below that predicted by the above calculations. The poor agreement is probably due to the simplicity of the calculational approach especially with the approximations involved in using Equation 4-2. The conservatism of this analysis is demonstrated since these calculated exposure results are larger than the actual measured radiation levels.

The east and west faces do not lend themselves as easily to shielding modifications because of the geometry associated with the shield tank and thermal column. Calculations were not performed for these directions.

Table 4-4 presents recent radiation measurements around the UFTR with the highest values at SW and NW direction. [13].

4.5 Nuclear Design

The UFTR is an Argonaut type reactor, heterogeneous in design; using 93 percent enriched uranium-aluminum fuel elements. The reactor core consists of two slabs each, made up of three fuel boxes, separated and surrounded by graphite. Each fuel box is composed of 4 fuel bundles. Each fuel bundle is composed of 11 U-Al fuel plates. The fuel boxes are cooled by primary coolant water which enters the bottom of each fuel box, the water coolant exits the top of the fuel box by gravity drain through the coolant outlet.

In order to achieve a particular desired excess reactivity capability in the core, up to three full or partial dummy aluminum bundles are placed in the configuration as

illustrated in Figure 4-6. In all cases the reactor configuration is compact and does not allow the insertion of a fuel element besides the 24 bundles allowed. Figure 4-17 shows a map of the reactor core and Figure 4-18 shows an axial cut of one fuel box. Four control blades of the swing arm variety control the reactor. The principal nuclear parameters for the UFTR are listed in Table 4-1.

Several studies were performed to obtain UFTR reactor parameters. Table 4-5 presents the codes applied in each study and their purpose. All these studies have used Diffusion Theory codes to obtain UFTR flux distribution and effective multiplication factor (keff). The results of these studies are presented in the next sections.

4.5.1 Normal Operation Conditions

4.5.1.1 Flux Distribution

The experimentally obtained neutron flux distribution for the UFTR during 100 kW (thermal) operations is shown in Figure 4-19 which includes both thermal and epithermal fluxes [2]. These flux distributions are currently being updated with new experimental determinations. This work is not yet complete but will be included as an addendum to this report when available. It is not expected that the flux distributions will have changed significantly.

Several studies have been carried out concerning the nuclear operation of the UFTR at 500 kW (thermal). Neutronic analyses of the UFTR were carried out by Wagner in one of these studies. As stated by Wagner in calculating the neutron flux distribution in the UFTR, the fuel, water, and graphite are assumed to be at an average coolant temperature of 133°F, which approximates reactor conditions at prolonged 100 kW (thermal) power operation. The thermal expansion of the fuel can be neglected, and the total assumed fuel loading was [ ]. For simplicity, all materials other than fuel plates and boxes, water, and graphite were neglected. The geometry and the critical dimensions for the fuel plate unit cell and the quarter fuel box assembly are indicated in the core section sketches presented in Figures 4-20 and 4-21.

Thermal and fast group constants for the fuel and graphite regions were calculated by the use of computer codes. BRT-1, Battelle-Revised-Thermos [14] was used to generate thermal neutron spectra and correspondingly weighed thermal group constants; PHROG [15] was used to generate fast neutron spectra and the corresponding average fast multigroup constants. These calculations began with the determination of cross section data for the fuel plate unit cell model comprised of uranium-aluminum fuel, aluminum clad, and water presented in Figure 4-20. The results of these calculations were then used as the microscopic input data needed to calculate the parameters for a quarter fuel box model (see Figure 4-21) containing 11 fuel plate unit cells and other structural material. After determining all the necessary parameters, the UFTR core region was represented and modeled as shown in the schematic drawing in Figure 4-22

This UFTR model shown in Figure 4-22 was used in a four-group diffusion theory calculation performed using CORA, a multigroup diffusion theory code for one-dimensional reactor analysis [16]. The flux distributions presented in Figures 4-23 and 4-24 were obtained by Wagner [6] from these CORA calculations. Figure 4-23 shows the normalized "flux per watt versus distance from core centerline" distribution along the North-South UFTR direction; Figure 4-24 shows the corresponding normalized distribution along the East-West UFTR direction. Average flux data for the UFTR was obtained from these distributions and is summarized in Table 4-6 for the fueled regions as well as for the total reactor. Table 4-6 also contains the peak-to-average flux ratios for the fueled regions and for the total reactor. The peak-to-average flux ratio (peaking factor) is less than 1.12 for all groups in the fueled power-producing regions. It is only over the total reactor that the peak-to-average flux ratios exceed 2 or more.

Similar flux calculations performed by De Martino [17] and Caner, using 3D codes, present better agreement with the experimental values, as shown in Table 4-7. The same studies also obtained the peak to average power density map as presented in Table 4-8, in all cases the peak to average power ratio are smaller than 2.

4.5.1.2 Control Blade Worth, Shutdown Margin and Excess Reactivity

The experimental control blade reactivity worth and shutdown margin with the most reactivity blade at the top, for the core configured with 2 ½ dummy bundles, are presented in Table 4-9. The experimental excess reactivity for this core configuration is 1.0 %Δk/k well below 2.3% Δk/k UFTR Technical Specifications authorized excess reactivity. Table 4-10 presents the calculated and experimental effective multiplication factor (keff) for the actual configuration. This value ranges from 0.994 to 1.009 as a function of the code applied.

Current rod calibration (integral rod worth versus position) curves for the UFTR system are presented in Figures 4-25 through 4-28.

4.5.1.3 Fission Product Poisoning Considerations

The fission product poisoning effects during hypothetical operation of the UFTR at 500 kW (thermal) have also been studied by Mr. Otaduy [18]. Although this is five times the currently licensed power level, some points in this analysis are worthy of inclusion in this section. To perform this study, several parameters had to be determined using a two-dimensional, diffusion theory calculation of the four energy group parameters. [3] The EXTERMINATOR-2 computer code [19] was used to model the two-dimensional UFTR core shown in Figure 4-29. The required fast and thermal four-group neutronics constants were taken from Wagner's work [6]. Results obtained from the EXTERMINATOR calculations were comparable with those obtained by Wagner, which differences attributed to the total mass of U-235 considered in each model.

The two isotopes Xe-135 and Sm-149 are usually considered the most important poisons in thermal reactors since they have very large cross sections and also characteristically reach a saturation level with reactor operation, while the bulk of the fission products are non-saturating and build up with burnup; therefore, these two isotopes were treated separately in the study by Otaduy. [18] The detailed study of the Xe-135 and Sm-149, as well as the gross fission product behavior performed by Otaduy, models the UFTR as a one-group, one-region homogenous reactor. The homogenized core parameters and the necessary constants used for Otaduy's analysis are presented in Table 4-11 and Table 4-12 respectively to augment the basic information about the UFTR nuclear data contained in the report.

At 500 kW, the Xenon equilibrium concentration, reached as usual in about 40 hours, is given by:

$$X_{eq} = \frac{\phi\Sigma_f(\gamma^I + \gamma^X)}{\lambda^X + \phi\sigma_a^X} = 1.062\times10^{13}\,cm^3 \qquad \textbf{Equation 4-3}$$

with a corresponding equilibrium absorption cross section given by:

$$\Sigma_{a\ eq}^{Xe} = X_{eq}\sigma_a^X = 2.88\times10^{-5}\,cm^{-1} \qquad \textbf{Equation 4-4}$$

This value is in good agreement with that read from Figure 4-30 for equilibrium Xe-135 in a highly enriched reactor. For significant (40-50%) "step" reductions, the buildup of Xe-135 after a step reduction in flux level from equilibrium conditions reaches a maximum concentration after ~3-4 hours with maximum Xe-135 concentrations about 7% larger than equilibrium.

The isotope samarium-149 is found to reach its equilibrium concentration in about eight or nine months due to the small fluxes found in the UFTR. This behavior is also considered approximately applicable whether the power level is 100 kW or 500 kW. The equilibrium absorption cross section in this case is:

$$\Sigma_{a\ eq}^{Sm} \approx \Sigma_f\gamma^{Pm} = 1.327\times10^{-5}\,cm^{-1} \qquad \textbf{Equation 4-5}$$

in good agreement with results found on Figure 4-31 which shows approximately the behavior of Sm-149 at 500 kW. The equilibrium absorption cross section will be approximately the same for 100 kW operation; however, the original time to reach the equilibrium level is considered to have taken somewhat longer since the UFTR 100 kW curve would fit just over Curve 6 shown in Figure 4-31. A step reduction in flux levels from equilibrium causes the Sm-149 concentration to increase to a level given by:

$$N_{Sm} = N_{Sm}^{eq} + N_{Pm}^{eq} \qquad \textbf{Equation 4-6}$$

At 500 kW the absorption cross section was calculated to be 1.423 x $10^{-5}cm^{-1}$, a value approximately 7.2% larger than equilibrium. At the UFTR 100 kW power level, the Sm-149 absorption cross section then increases considerably less than 7% above the equilibrium level since the Sm-149 level available for decay directly depends upon the equilibrium power level prior to a step reduction in power level or flux. A plot of the calculated samarium concentration increase with burnup is presented in Figure 4-32. It should be noted that the Sm-149 buildup is relatively flux independent when related to burnup at the low flux levels (~<10^{13}) present in the UFTR.

For the gross fission product behavior in the presence of the low UFTR flux levels, the overall microscopic absorption cross section does not change appreciably with irradiation. Therefore, a constant rate of poison production is a recommended simplifying assumption [18]. A constant value of 51.2 b is considered reasonable.

4.5.1.4 Reactivity Time Dependence

Since the fuel is depleted only very slightly in this reactor and since the fission product poisons are present in very small concentrations, Otaduy explains that it is reasonable to consider the effective multiplication factor to be proportional to the thermal utilization factor during the entire lifetime of the reactor. The beginning thermal utilization factor is equal to 0.7416. With time, the combined effects of burnup of the fuel and poisoning due to the fission products other than Xe-135 and Sm-149 start to become noticeable. The altered thermal utilization factor is given by the following equation:

$$f'' = \frac{\Sigma_a^{U-235} - \delta\Sigma_a^{U-235}}{\Sigma_a - \delta\Sigma_a^{U-235} + \Sigma_a^{Xe} + \Sigma_a^{Sm} + \Sigma_a^{fp}} \qquad \textbf{Equation 4-7}$$

where Σ_a^{U-235}, Σ_a and Σ^{Xe} are considered to remain roughly constant while the rest vary with burnup. The thermal utilization factor at end of life (EOL) will then be given by the following relationship:

$$f'' \approx 1 - \Delta\rho \qquad \textbf{Equation 4-8}$$

where $\Delta\rho$ is the excess reactivity available for fuel burnup in the reactor.

Otaduy performed calculations concerning the change in reactivity with burnup for a number of UFTR thermal power levels. Table 4-13 includes these results for the 100 kW case of interest here, as well as the 500 kW case for comparison. Reactor behavior is

clearly demonstrated in Figure 4-33. It should be noted that after the initial reactivity drop due to the rapid buildup of Xe-135, the change in reactivity present a linear tendency with an approximately constant slope of 10^{-8} $\Delta k/k$ per kWhr due to the combined effect of Sm-149 buildup and fuel burnup. This slope decreases to a value of 6.0×10^{-9} after the Sm-149 reaches equilibrium. The shape of the curves is also relatively independent of the power level of operation; therefore, accurate predictions of long-term reactivity changes are possible based upon knowledge of the total power produced over the time of operation regardless of the power level at which the reactor is operated during that time period.

Otaduy also found that since the maximum allowed excess reactivity for the UFTR is 2.3%, it is the initial linear response that governs the reactor life at 500 kW operation. The same dependence should apply for the current 100 kW rated system. The End of Life (EOL) is reached before Sm-149 reaches its equilibrium concentration. Therefore, EOL in the UFTR is primarily determined by Sm-149 buildup and not fuel depletion as it is in power reactors. Due to the 2.3% excess reactivity limit on the UFTR, a decrease of 0.9% in reactivity in the linear part of the curves from Figure 4-33 will determine the EOL of the core. Since the slope of this curve is approximately 10^{-6} $\%/kW_{th}$, the EOL is defined by a burnup of 3.75 MWD or approximately 1800 hours at 500 kW or 9000 hours at 100 kW. The change in thermal utilization factor or the reactivity change at EOL is calculated to be $-2.515\%\Delta k/k$.

Two other methods of analysis were used to check the validity of this simplistic model. One model uses first order perturbation theory with a homogenized fuel region without giving consideration to the space dependence of burnup, and the last method treats the space dependence of the chance of parameters due to the non-uniformity of the power distribution using perturbation theory also. Table 4-14 includes the results of the reactivity change with burnup at 500 kW as calculated by the first order perturbation theory analysis and the thermal utilization analysis for comparison purposes. In analyzing these results obtained by these different methods calculated at EOL for the UFTR, there is little difference in the results. Therefore, since all the results are comparable for this low burnup, highly enriched research reactor, it is considered to be unnecessary and not useful to perform a detailed space-dependent calculation to analyze the reactivity time dependence.

Fuel management studies performed by Otaduy have led to several conclusions[18]. First, rearranging the fuel in the core at the time of the selected EOL, for this study (9.0×10^5 kWhr), will not produce a significant gain in reactivity. The gain associated with the rotation of the fuel elements is found to be of the order of 3.66×10^{-5} $\Delta k/k$ equivalent to a power production of 6840 kWhr or only 14 hours of operation at 500 kW or 70 hours at 100 kW. Second, shuffling the fuel produces a reactivity gain equivalent to 21 hours of operation at 500 kW. The combination of shuffling and fuel rotation yields a predicted gain equivalent to 30 hours of operation at 500 kW or 150 hours at 100 kW. Therefore, shuffling and rotation operations are of little interest. The introduction of fresh fuel in place of the four (4) most highly burned bundles yields a predicted reactivity gain of 2.858×10^{-3} $\Delta k/k$, equivalent to 44,000 kWhr, which

represents 880 hours of operation at 500 kW or 4400 hours at 100 kW. This gain is approximately equivalent to 50% of the selected EOL of the reactor core and does represent a significant gain.

The buildup of plutonium-239 in the core is expected to be very small since the burnup of uranium-235 is expected to be no more than about 2 grams per year. Assuming operation at 100 kW_{th}, the burnup of 2 grams leads to 455.56 equivalent full power hours of operation per year. Under these conditions the plutonium-239 production was calculated through the following expression [20] :

$$N_{49} = \frac{\overline{\sigma}_{a,28} * N_{28}}{\overline{\sigma}_{a,49}} * \left(1 - \exp\left(-\overline{\Phi}_T * \overline{\sigma}_{a,49} * \Delta t\right)\right) \qquad \textbf{Equation 4-9}$$

where:

N_{49}	is the atomic density of the Pu-239[at/cm^3];
N_{28}	is the atomic density of the U-238 [at/cm^3];
σ_a^{28}	is the microscopic thermal absorption cross section of the U-235 [cm^{-2}];
σ_a^{49}	is the microscopic thermal absorption cross section of the Pu-239 [cm^{-2}];
Φ_T	is the thermal flux [nt/cm^{-2} s]; and
Δt	is the elapsed time[s].

The calculation provides a production of 7.7 x10^{-4} grams per year in the core. This production is very small and will not affect UFTR dynamic characteristics. The expected plutonium production will be smaller than calculated because much of the produced plutonium will be consumed.

4.5.2 Reactor Core Physics Parameters

Core reactivity coefficients calculated by DeMartino [17] and Caner [21] are summarized in Table 4-15. The isothermal temperature, the fuel temperature and the uniform water void coefficients are all negatives. All these coefficients contribute to a strong self-limiting negative feedback capability during power transients. Therefore, the core has an improved inherent controllability since the reactivity coefficients are negative.

For the UFTR core, DeMartino [17] calculated the delayed neutron fraction as equal to 0.0073. The experimental value was found to be equal to 0.007 (FSAR). The

calculated core neutron lifetime is equal to 2.76 x10^{-4} s [17] while the experimental neutron lifetime was found to be 2.8 x10^{-4} s (FSAR). Since the UFTR is limited to a maximum insertion rate of 0.06%Δk/k/sec, there is no condition to reach the prompt critical condition where the reactor period is strongly dependent on the prompt neutron lifetime. Table 4-16 presents the calculated and experimental values of these parameters obtained for the core.

4.5.3 Operating Limits

The operational integrity of the core is not compromised since all fuel design limits will not be exceeded during normal operation or during postulated accident scenarios. UFTR core reactivity factors contribute to a strong self-limiting negative feedback during power transients. The UFTR limiting safety system settings further ensure conditions for the fuel and fuel cladding which are well within the safety envelope and far below the maximum limits where damage can occur. The safety limits and limiting safety systems settings are presented in Table 4-17.

In order to prevent exceeding the reactor safety limits and to minimize potential hazards from experimental devices, the following limitations on experiments are applied:

- The absolute reactivity worth of any single movable or nonsecured experiment is limited to 0.6%Δk/k.
- The total absolute reactivity worth of all experiments is limited to 2.3%Δk/k.
- The absolute reactivity worth of an experiment is determined without taking into account the temperature effects.
- An experiment is not inserted or removed unless all the control blades are fully inserted or its absolute reactivity worth is less than that which could cause a positive 20-sec stable period.

The safety limits and the Standard Operating Procedures series A (Routine Operating Procedures) [22] have been proving to be more than sufficient to assure safety operation of the UFTR.

4.6 Thermal and Hydraulic Design

Two studies had been carried out to evaluate the heat transfer properties and the corresponding fuel plate temperature distribution of the associated water channel for the UFTR core. The first study performed by Wagner [6] taking into account UFTR operation at 500 kW was described in the previous version of this SAR, and results repeated in Section 4.6.1 for comparison. A second study performed by Welch [23] dealing with steady-state thermal hydraulic analysis and overpower transients of the UFTR fueled with high enriched uranium (HEU), operating at 100kWth, is presented in section 4.6.2.

Average inlet and outlet coolant temperatures and the coolant flow rate for the UFTR at 100 kW operation are included in Table 4-1.

As a result of the above studies and the operational experience of the UFTR since May 1959, first rated at 10 kW and then at 100 kW power levels, it is concluded that the thermal and hydraulic design of the UFTR facility is safe and considered more than adequate for continued operation at the 100 kW power level. The large safety margin in effect even for operation at 500 kW further substantiates the safety of the UFTR from a thermal hydraulic point of view and supports continued licensing of the UFTR for operation at the 100 kW rated power level.

Descriptions and drawings of the UFTR present primary and secondary cooling systems are found in Chapter 5, "Reactor Coolant System". The instrumentation necessary for measuring the temperatures and flows of the reactor fuel and coolant is also shown in the schematic diagrams of Figure 5-1 showing Primary Cooling System and in Figure 5-4 showing the Secondary Cooling System.

4.6.1 Results of Heat Transfer Calculations Performed by Wagner[6]

A brief summary of the computed heat transfer and temperature results is presented in Table 4-18 for various coolant flow rates, power levels, hot-channel factors, and coolant inlet temperatures for both comparisons with the 100 kW results, which are also included. The results in Table 4-19 indicate that, even assuming a conservative hot-channel factor of 1.5, 197.8°F is the maximum fuel plate temperature for operation at a power level of 500 kW (which is five times the currently rated power and a primary coolant rate of 65 gpm). Similarly, at 100 kW with an assumed hot-channel factor of 1.5, the maximum fuel plate temperature is calculated to be 173.8°F. Both maximum temperatures are well within the operating temperatures of the fuel plate. To check the validity of the model, actual operational data at 100 kW is compared to computed results using a hot-channel factor of unity. The computer primary coolant temperature change (ΔT) is found to underestimate the actual operational temperature rise by 8 percent. Assuming this correlation to hold true for 500 kW power operation, the primary coolant ΔT as predicted by this model will be approximately 53°F. In the same manner, the compound results using a hot-channel factor of 1.5 are used to predict the coolant outlet temperature of the hottest fuel box. Actual operational data shows that the model overestimates, as expected, the hottest fuel box coolant temperature change (ΔT) by 13 percent. Therefore, the highest fuel box coolant outlet temperature to be expected for the hypothetical 500 kW operation and for a coolant inlet temperature of 111.7°F is considered to be approximately 176°F.

From these results, it is concluded that a hot-channel factor of 1.5 can be expected to yield a relatively good representation of the temperature distribution of the "hottest" fuel plate and water channel in the UFTR. Centerline fuel plate (nodal point 9 in Figure 4-34) and bulk water channel (nodal point 1) axial temperature distributions are shown in Figures 4-35 and 4-36 respectively. Figures 4-35 and 4-36 include the results of

calculations made assuming reactor operation at the current rated UFTR power of 100 kW and at a hypothetical upgraded power level of 500 kW as presented by Wagner. [6]The temperature distribution of the fuel plate-cladding surface (nodal point 2) is considered to be of the same shape as the centerline distribution. [6] The ΔT across the fuel plate varies from about 0.13°F to 0.21°F for operation at the current UFTR rated power level of 100 kW; at 500 kW, the fuel plate ΔT variation is calculated to be about 0.13°F to 0.37°F. In either case, the metallic nature of the fuel and the bonded cladding in conjunction with low power densities prevent excessive fuel temperatures from being reached in the UFTR when coolant is present.

Investigations of the fuel temperature behavior after a loss of coolant accident and shutdown of the reactor were also investigated by Wagner [6]. Using a conservative heat transfer model, it was concluded that the fuel plate temperatures will increase only about 30°F under these circumstances. Further explanation and discussion on this topic are contained in Chapter 13, Accident Analysis.

4.6.2 Results of Heat Transfer Calculations Performed by Welch [23]

A steady-state two-dimensional (2-D) heat conduction solver was developed by Welch [23] following the assumptions described by Wagner [6]. The purpose of the developed hydraulics solver was to obtain the two-dimensional (x, z) temperature distribution in the "hot plate" and the axial (z-direction) coolant temperature distribution during normal (e.g. 100 kW) operation. The hot plate or hot channel conditions were set using conservative hot channel factors.

Steady state calculations were performed for the best estimate of UFTR configuration with [ ] plates per fuel bundle, 2 and a half dummy bundles per reactor core, hot channel factor of 1.5, and 43.5 gpm volumetric flow rate. Table 4-19 presents the results obtained for these best estimate operating conditions. The maximum fuel temperature is calculated to be 156.85 °F.

Welch's also developed a method that provides a conservative estimate of the maximum centerline fuel temperature that would occur during an idealized prompt overpower transient, e.g., due to a neutronic excursion. It was assumed that the reactor is operating at a nominal steady –state power level (100 kWth) when suddenly a neutronic excursion occurs resulting in an overpower transient. It was also assumed that a prompt (step-function) rise in neutron flux occurs, the reactor scrams on high flux level, and the core thermal power, having peaked with the peak flux, quickly diminishes. The overpower transient is considered to be short with respect to the heat transfer time constants (i.e., occurs on the order to milliseconds). The fuel centerline temperature was estimated by determine what would be the steady-state centerline fuel temperature for a reactor operating at the maximum power level (the overpower) experience in the course of the transient; in this study, 500% and 625% overpower transients were considered.

Table 4-20 presents the overpower transient analysis results for the best estimate of UFTR configuration above presented and also for the case where the volumetric flow rate is reduced to 40 gpm. The maximum fuel centerline temperature calculated during the overpower transient for 625% overpower was 344.48°F considering the current best estimate of HFTR volumetric flow rate (43.5 gpm), hot channel factor (f_h=1.5). The solidus temperature of 6061 aluminum is near 1079.60°F [24], the melting point of pure aluminum is 935.60°F [25] and the melting temperature of the Al-U euthetic alloy of 13% U is 1184°F [4]. Considering these values the analysis also indicates that there is a large conservative fuel and clad temperature margin (ΔT) allowed for in the UFTR configuration in terms of onset of metal/salt reaction, clad melting, or fuel melting for the steady state case as well as for the overpower analysis.

Table 4-1 Present UFTR Characteristics

General Features	
Reactor Type	Heterogeneous, Thermal
Licensed Rated Power Level	100 kW thermal
Maximum thermal flux level in center vertical port at 100 kW	~1.5 x 10^{12}n/cm^{2}sec
Excess reactivity (at 72°F)	~1.0% Δk/k
Clean, cold critical mass	[ ]
Effective prompt neutron lifetime	2.8 x 10^{-4}sec
Uniform water void coefficient	-0.2% Δk/k/% voids
Temperature coefficient	-0.3 x 10^{-4}% Δk/k per °F
U-235 mass coefficient	0.4% Δk/% U-235
Startup source	Sb-Be ≤ 25 Ci or PuBe ≤ 1.0 Ci
Reflector	graphite (1.6 gm/cm^3)
Moderator	H_2O and graphite
Fuel Plates	
Fuel	93% enriched, U-Al
Fuel loading	3408.95 gm U-235
Plate thickness	0.070 in.
Plate width	2.845 in.
Plate length	25.625 in.
Water channel width	0.137 in.
Aluminum to water ratio (volume)	0.49
"Meat" composition	14.05 w/o U
Coolant	
Type	H_2O
Flow (at 100 Kw)	41.0 gpm
Equilibrium Inlet Temperature (100 Kw)	115°F
Equilibrium Outlet Temperature (100 Kw)	130°F
Control Blades	
Type	Cd, swinging vane, gravity fall
Number	3 safety; 1 regulating
Insertion time	< 1 sec
Removal time	100 sec (minimum)
Blade worth, safeties	Safety #1 ~ 122% Δk/k
	Safety #2 ~ 1.35% Δk/k
	Safety #3 ~ 1.83% Δk/k
Blade worth, regulating	Reg. Rod ~ 0.81% Δk/k
Reactivity addition rate, maximum allowed	0.06% Δk/k/sec
Shield (concrete)	
Sides, center	6 ft., cast, barytes
Sides, ends	6ft. 9 in., cast, barytes
Middle	Barytes concrete blocks
Top	5 ft. 10 in.
End	3 ft. 4 in.
Experimental Facilities	
Thermal column, horizontal	60 in. x 60 in. x 56 in. high
Thermal column, vertical	2 ft. diam. x 5 ft.; H_2O or D_2O
Shield test tank	5 ft. x 5 ft. x 14 ft. high
Experimental holes	5 vertical, 4 in. x 4 in.
	3 vertical, 1 1-1/2 in.
Foil slots	16 vertical, 3/8 in. x 1.0 in.

Table 4-2 UFTR Fuel Plate Characteristics (nominal values)

Quantity	HEU fuel (fresh)
Fuel composition	93% enriched U-Al
U density (g/cm^3)	0.44
U-235 per plate (g)	[ ]
Plate thickness (cm)	0.178
Plate width (cm)	7.226
Plate length (cm)	65.088
Al clad thickness (cm)	0.0381
Meat thickness (cm)	0.1016
Meat length (cm)	60.0075
Meat width (cm)	5.84
Meat composition (w%U)	14.05

Table 4-3 Summary of Shielding Calculations for 100 kWth Operation [6]

Effective Energy (MeV)	Data for Equation 4-1 Prompt Gammas (MeV/sec) [26]	Fuel Slab Escape Probability [8]	Buildup Factor for Barytes Concrete [10]	K (MeV/cm^{2}sec/mR/hr)
1	1.07 E+16	0.3386	37.0	548
2	9.56 E+15	0.3775	18.0	651
4	3.21 E+15	0.4310	11.0	819
6	7.94 E+14	0.4552	10.3	928

Calculated Shielding Results at North or South face of Barytes Concrete

Effective Energy (MeV)	Prompt Gammas $\dot{D}_{AT\,P}$	Prompt Gammas $\dot{D}_{AT\,P}$ with addition of 6" Poly-B-Pb	Barytes Concrete Capture Gamma $\dot{D}_{AT\,P}$	Barytes Concrete Capture Gamma $\dot{D}_{AT\,P}$ with addition of 6" Poly-B-Pb
1	0.51	0.05		
2	3.16	0.53		
4	1.26	0.63		
6	0.26	0.26		
	Total = 5.19	Total = 1.47	Total = 7.9	Negligible

Note: $\dot{D}_{AT\,P}$ = exposure rate (mR/hr) at point P.

Table 4-4 Radiation Survey performed on 10/09/01 around UFTR shielding at full power.

Survey Location	Distance from reactor wall	Maximum radiation level measured (mR/hr)
W	1'	1
NW	1'	6
N	1'	2
NE	3'	0.5
E	1'	2
SE	1'	0.2
S	1'	0.8
SW	1'	6

Table 4-5 Summary of the studies performed and codes utilized to obtain UFTR reactor parameters.

Study	Code	Purpose	Configuration
Wagner [6] (1973)	BRT-1	Thermal cross sections	11 plates per bundle and 2 dummy bundles per core locate ½ of a dummy bundle at each corner
	PHROG	Fast group neutron Cross sections	
	CORA	Neutron Diffusion Theory calculations	
Otaduy [18] (1974)	Exterminator-2		
Listing Listing, 1974 #57]	Exterminator-2		
De Martino [17] (1991)	Leopard	Cross Section Generation	11 plates per bundle and 2 and ½ dummy bundles per core
	UM3DB	Neutron Diffusion Theory calculations	
	Exterminator-2	Perturbation calculations	
Caner [21] (1998)	Leopard	Cross Sections	11 plates per bundle and 2 and ½ dummy bundles per core
	WIMS-D4M	Cell calculations	
	DIF3D	Finite Difference Diffusion Theory	

Table 4-6 Average Flux Data For The UFTR [6]

Direction	Group	Average Flux Per Watt	Peak-to-Average Flux Ratio
		Fueled Regions	
North-South	1	5.45097 E-06	1.10878
	2	6.39734 E-06	1.06056
	3	6.33132 E-06	1.08064
	4	9.32447 E-06	1.13057
East-West	1	5.19175 E-06	1.11071
	2	5.99736 E-06	1.08844
	3	5.87437 E-06	1.07811
	4	8.33717 E-06	1.06152
		Total Reactor	
North-South	1	1.92642 E-06	3.13738
	2	3.37201 E-06	2.01209
	3	4.15711 E-06	1.75352
	4	7.30648 E-06	1.65883
East-West	1	7.50292 E-06	7.68570
	2	1.07666 E-06	6.06296
	3	1.32403 E-06	4.78329
	4	3.65015 E-06	2.60856

Table 4-7 Peak thermal fluxes in the center vertical port

Reference	Thermal Flux (neutrons/cm^2-s)
Experimental Data	1.5 x 10^{12}
DeMartino [17]	1.86 x 10^{12}
Caner [21]	2.1 x 10^{12}

Table 4-8 UFTR peak to average power density map

	CORE	NW	NC	NE	SW	SC	SE
Caner [21]	1.86	1.78	1.66	1.77	1.78	1.68	1.77
DeMartino [17]	1.39	1.47	1.44	1.51	1.50	1.48	1.53

Table 4-9 Experimental Control Blade Worth and Shutdown margin

Blade	% Δk/k
Safety 1	1.21
Safety 2	1.33
Safety 3	1.90
Regulating blade	0.495
Total Control Blade Worth	4.935
Shutdown margin with S3 at top	3.035

Table 4-10 UFTR core criticality benchmarking [21]

Core	Code	U-235 loading(g)	keff	Remarks
HEU 11/2.5	Experiment	[ ]	1.01	Blade worth experiment
HEU 11/2.5	LEOPARD/ UM3DB	[ ]	0.994	
HEU 11/2.5	WIMS-D4M/DIF3D	[ ]	1.009	

Table 4-11 Summary of UFTR Homogenized Average Parameters (500 kWth)*

$V^{Total} = 2.768 m^3$	$N^{U-235} = 3.0923 \times 10^{18} atoms / cm^3$
$\Sigma_a = 18.89 \times 10^{-4} cm^{-1}$	$\bar{\phi} = 4.79 \times 10^{12} ncm^{-2} s^{-1}$ @ $500 Kw$
$\Sigma_a^{U-235} = 14.01 \times 10^{-4} cm^{-1}$	$\Sigma_f = 11.7426 \times 10^{-4} cm^{-1}$
$\sigma_a^{U-235} = 453b$	$\sigma_f^{U-235} = 379.7 barns$

NOTE: The only parameter greatly dependent upon the difference in power level considered (500 kWth versus 100 kWth) is average flux. All other parameters are relatively independent of power level in this range and are considered applicable estimates for the UFTR at its current 100 kWth rating.

Table 4-12 Poison Parameters For Xe-135 and Sm-149 Analysis

Isotope	Fractional Fission Yield γ	Decay Constant $\lambda(sec^{-1})$	Absorption Cross Section (barns) σ_a
I-135	0.061	2.89×10^{-5}	negligible
Xe-135	0.003	2.09×10^{-5}	2.72×10^{6}
Pm-149	0.0113	3.56×10^{-6}	negligible
Sm-149	zero	stable	5.0×10^{4}

Table 4-13 Sm-149 and Reactivity Vs. Burnup For 100 and 500 kW Operation [6]

Power	100 kW(1)				500 kW(2)			
Burnup kWhr	Time hrs	Σ_a^{Sm} cm^{-1}	f''	Reactivity %Δk/k	Time hrs	Σ_a^{Sm} cm^{-1}	f''	Reactivity %Δk/k
2 E04	200	6.11 E-7	0.7381	-0.482	40	8.02 E-7	0.73016	-1.554
4 E04	400	1.40 E-6	0.7377	-0.534	80	1.43 E-6	0.72984	-1.596
1 E05	1000	2.26 E-6	0.7371	-0.610	200	2.83 E-6	0.72908	-1.699
4 E05	4000	6.71 E-6	0.7343	-0.998	800	7.1 E-6	0.72629	-2.076
6 E05	6000	8.63 E-6	0.7327	-1.204	1200	8.9 E-6	0.72482	-2.274
1 EO5	10000	1.1 E-5	0.7302	-1.538	2000	1.1 E-5	0.72244	-2.595
5 E06	50000	1.327 E-5	0.7129	-3.876	10000	1.321 E-5	0.70497	-4.951

(1) $\bar{\phi}_{th}^{F} = 9.5872\ E+11\ cm^{-2} - \sec^{-1}$, $\Sigma_a^{Xe} = 8.336\ E-6\ cm^{-1}$

(2) $\bar{\phi}_{th}^{F} = 4.7936\ E+12\ cm^{-2}\ \sec^{-1}$, $\Sigma_a^{Xe} = 2.887\ E-5\ cm^{-1}$

Table 4-14 Reactivity Change With Burnup [18]

Operation Time, hrs	Sm(old) $\Sigma_a cm^{-1}$	Burnup kWhr	Reactivity Change, %Δk/k Perturbation Theory	Reactivity Change, %Δk/k Thermal Utilization Analysis
40	8.02 E-7	2.0 E+4	-1.570%	-1.557%
80	1.43 E-6	4.0 E+4	-1.614%	-1.593%
200	2.83 E-6	1.0 E+5	-1.719%	-1.696%
800	7.10 E-6	4.0 E+5	-2.099%	-2.073%
1200	8.90 E-6	6.0 E+5	-2.298%	-2.270%
2000	1.10 E-5	1.0 E+6	-2.616%	-2.590%
10000	1.33 E-5	5.0 E+6	-4.809%	-4.947%

NOTE: UFTR operation at 500 kWth.

Table 4-15 UFTR Core reactivity coefficients

Coefficient	Experiment (FSAR)	Caner [21]	DeMartino [17]
Isothermal temperature coefficient $\Delta k / k / ^{o} F$	$-3x10^{-5}$	$-1.4x10^{-4}$	$-3.5\ x10^{-5}$
Fuel temperature coefficient $\Delta k / k / ^{o} F$		$-2.6x10^{-7}$	
Uniform water void coefficient $\Delta k / k / \%void$	$-2x10^{-3}$	$-9.1x10^{-4}$	$-1.9\ x10^{-3}$

Table 4-16 Reactor Kinetics constants [17]

Core	Delayed Neutron Fraction	Prompt Neutron Lifetime (sec)
HEU experimental	7.0 E-03	2.8 E-04
HEU calculated	7.3 E-03	2.76 E-04

Table 4-17 UFTR Safety Limits (SL) and Limiting Safety System Settings(LSSS)

UFTR SAFETY LIMITS SPECIFICATIONS

1. The steady-state power level shall not exceed 100 kWt.
2. The primary coolant flow rate shall be greater than 18 gpm at all power levels greater than 1 watt.
3. The primary coolant outlet temperature from any fuel box shall not exceed 200°F.
4. The specific resistivity of the primary coolant water shall not be less than 0.4 megohm-cm for periods of reactor operations over 4 hours.

UFTR LSSS SPECIFICATIONS

1. Power level at any flow rate shall not exceed 125 kW.
2. The primary coolant flow rate shall be greater than 30 gpm at all power levels greater than 1 watt.
3. The average primary coolant outlet temperature shall not exceed 155°F when measured at any fuel box outlet.
4. The reactor period shall not be faster than 3 sec.
5. The high voltage applied to Safety Channels 1 and 2 neutron chambers shall be 90% or more of the established normal value.
6. The primary coolant pump shall be energized during reactor operations.
7. The primary coolant flow rate shall be monitored at the return line.
8. The primary coolant core level shall beat least 2 in. above the fuel.
9. The secondary coolant flow shall satisfy the following conditions when the reactor is being operated at power levels equal to or larger than 1 kW:
   (a) Power shall be provided to the well pump <u>and</u> the well water flow rate shall be larger than 60 gpm when using the well system for secondary cooling.

   or

   (b) The water flow rate shall be larger than 8 gpm <u>when</u> using the city water system for secondary cooling.
10. The reactor shall be shutdown when the main alternating current (ac) power is not operating.
11. The reactor vent system shall be operating during reactor operations.
12. The water level in the shield tank shall not be reduced 6 in. below the established normal level.

Table 4-18 Fuel Plate Heat Transfer Data and Results of Calculations [6]

Coolant Flow Rate (gpm)	Power Level (kWth)	Coolant Inlet* Temperature (°F)	Coolant Outlet Temperature (°F)	Hot Channel Factor	Maximum Predicted Fuel Temperature (°F)
31.2	100	132.7	153.1	1.0	162.9
65.0	500	111.7	160.5	1.0	171.5
31.2	100	132.7	163.3	1.5	173.8
65.0	500	111.7	185.0	1.5	197.8
31.2	100	132.7	193.8	3.0	206.4
65.0	500	111.7	212.0	3.0	238.3

*These values were computed by primary coolant heat balances assuming equilibrium coolant outlet temperatures of 155°F for 100 kW operation and of 165°F for the hypothetical 500 kW operation.

Table 4-19 Steady-state thermal hydraulics analysis results: UFTR temperatures at full power (100 kWth) with current best estimate of UFTR volumetric flow rate (43.5 gpm), hot channel factor (f_h=1.5), and coolant inlet temperature (105°F) [23]

Fuel Type Plates/Dummies	**HEU** 11 / 2.5
Case Hot channel factor Volumetric flow rate (gpm) Fluid inlet temperature (°F)	 1.5 43.5 105.00
Fuel average power density (MW/m^3)	11.88
Maximum fuel temperature (°F)	156.85
Maximum clad temperature(°F)	156.60
Maximum clad-to-coolant ΔT	35.96
Hot bundle ΔT (°F)	26.57
Reactor average ΔT (°F)	15.86
Hot bundle outlet temperature (°F)	131.58
Average reactor outlet temperature (°F)	120.87

Table 4-20 Overpower transient analysis results: Comparison of estimated UFTR peak temperatures midway through (or at the axial centerline of) the hot plate during 500% and 625% overpower transients. Reactor at full power (100 kW_{th}) [23].

Fuel Type Plates/Dummies	**HEU** **[ ]/2.5**	
Case		
Hot channel factor	1.5	1.5
Volumetric flow rate (gpm)	40	43.5
Fluid inlet temperature (°F)	115	105
500 % OVERPOWER		
Fuel Centerline-to-Coolant ΔT (°F)	181.62	181.62
Fuel Centerline Temperature (°F)	310.1	299.12
Clad Outer Temperature (°F)	308.84	297.68
Clad Outer-to-Coolant ΔT (°F)	180.18	180.18
625 % OVERPOWER		
Fuel Centerline-to-Coolant ΔT (°F)	226.98	226.98
Fuel Centerline Temperature (°F)	355.46	344.48
Clad Outer Temperature ((°F)	353.84	342.68
Clad Outer-to-Coolant ΔT (°F)	225.18	225.18

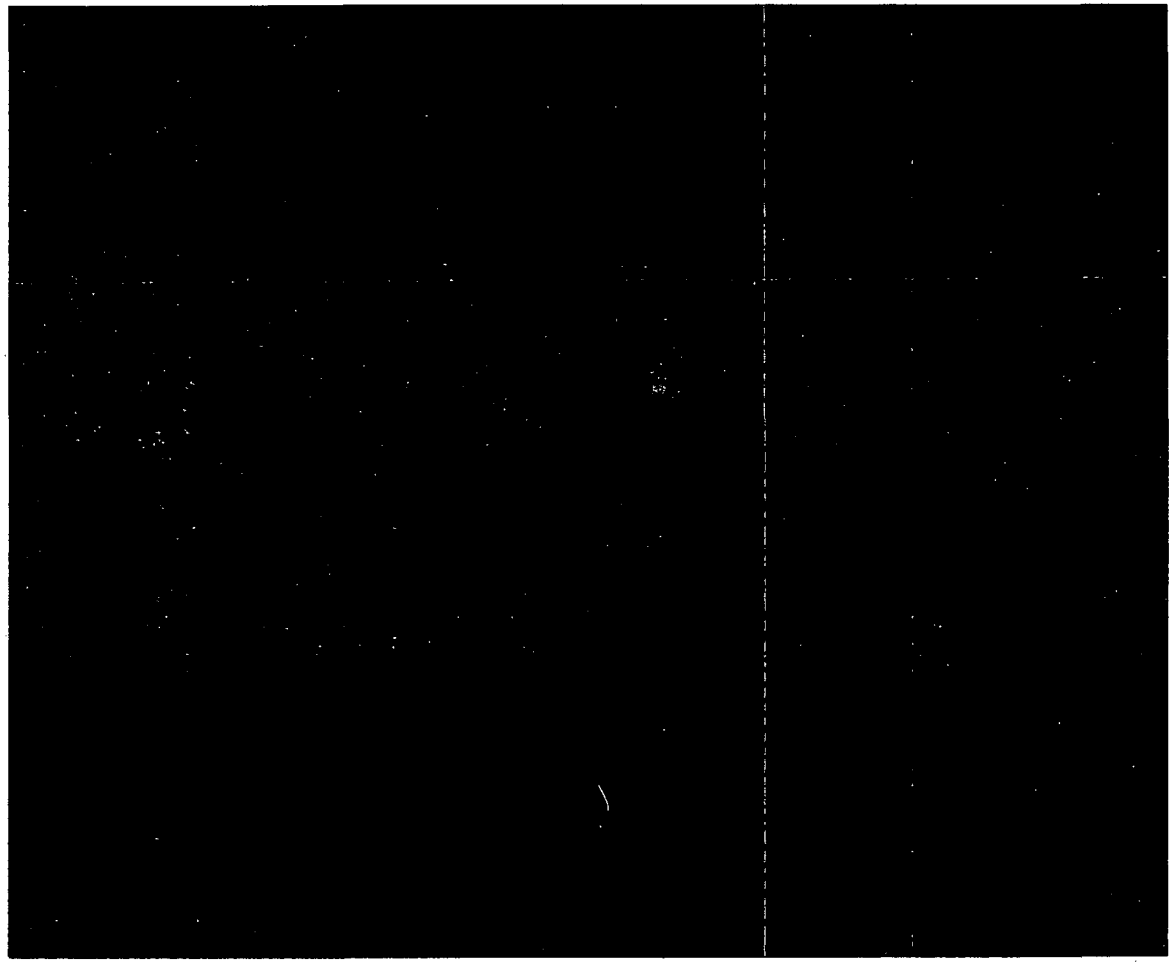

Figure 4-1 Longitudinal Section Diagram of UFTR

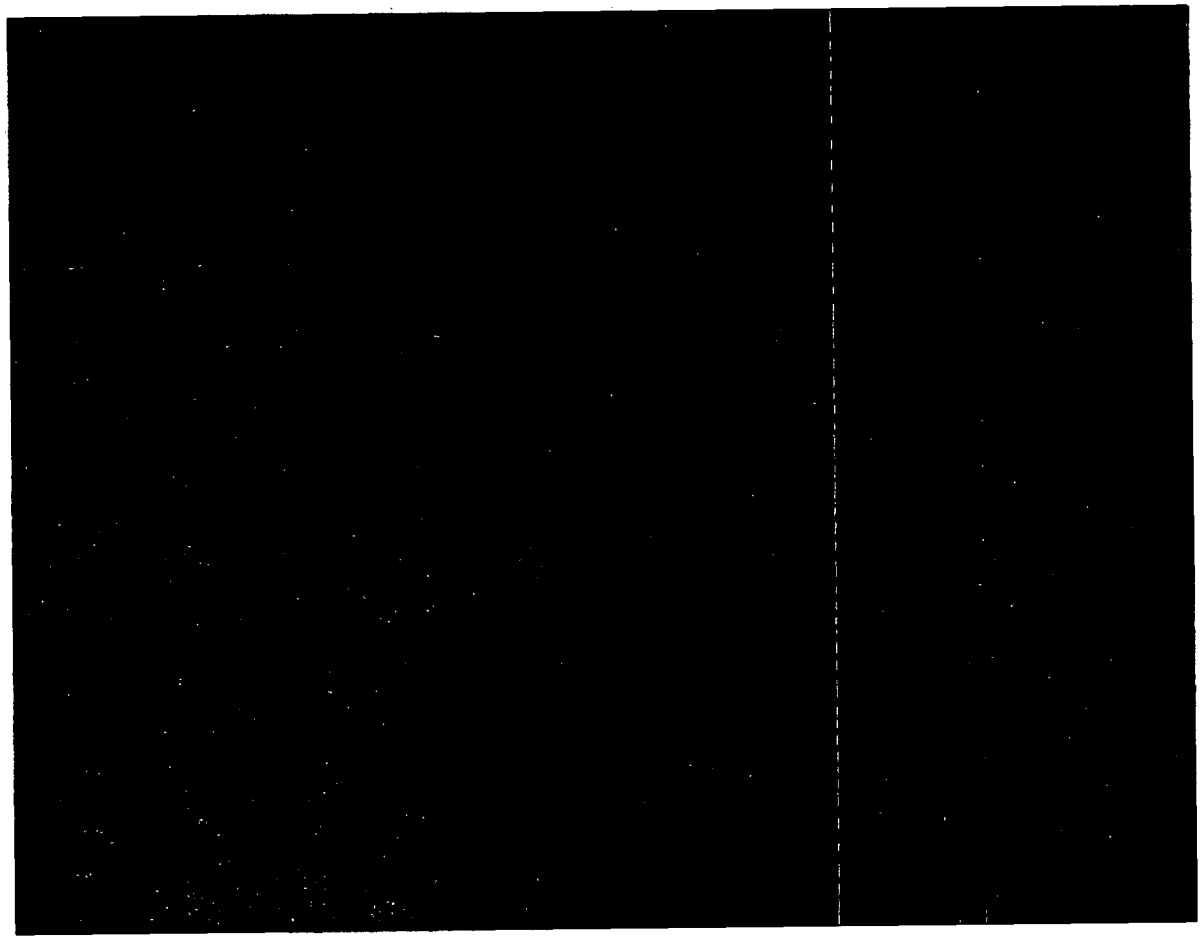

Figure 4-2 Transverse Section through the UFTR Core Center

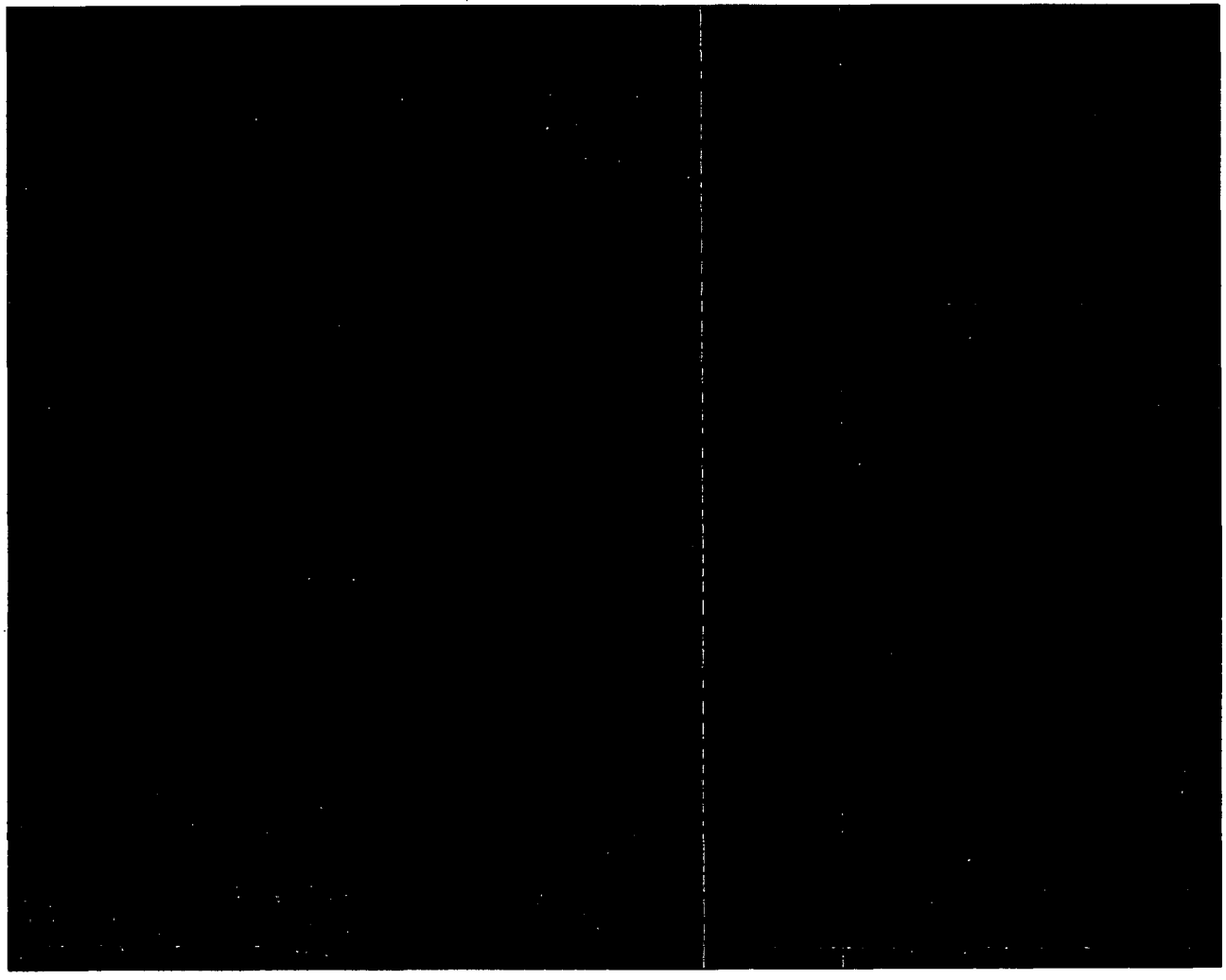

Figure 4-3 Horizontal Section Diagram of UFTR at Beam Tube Level

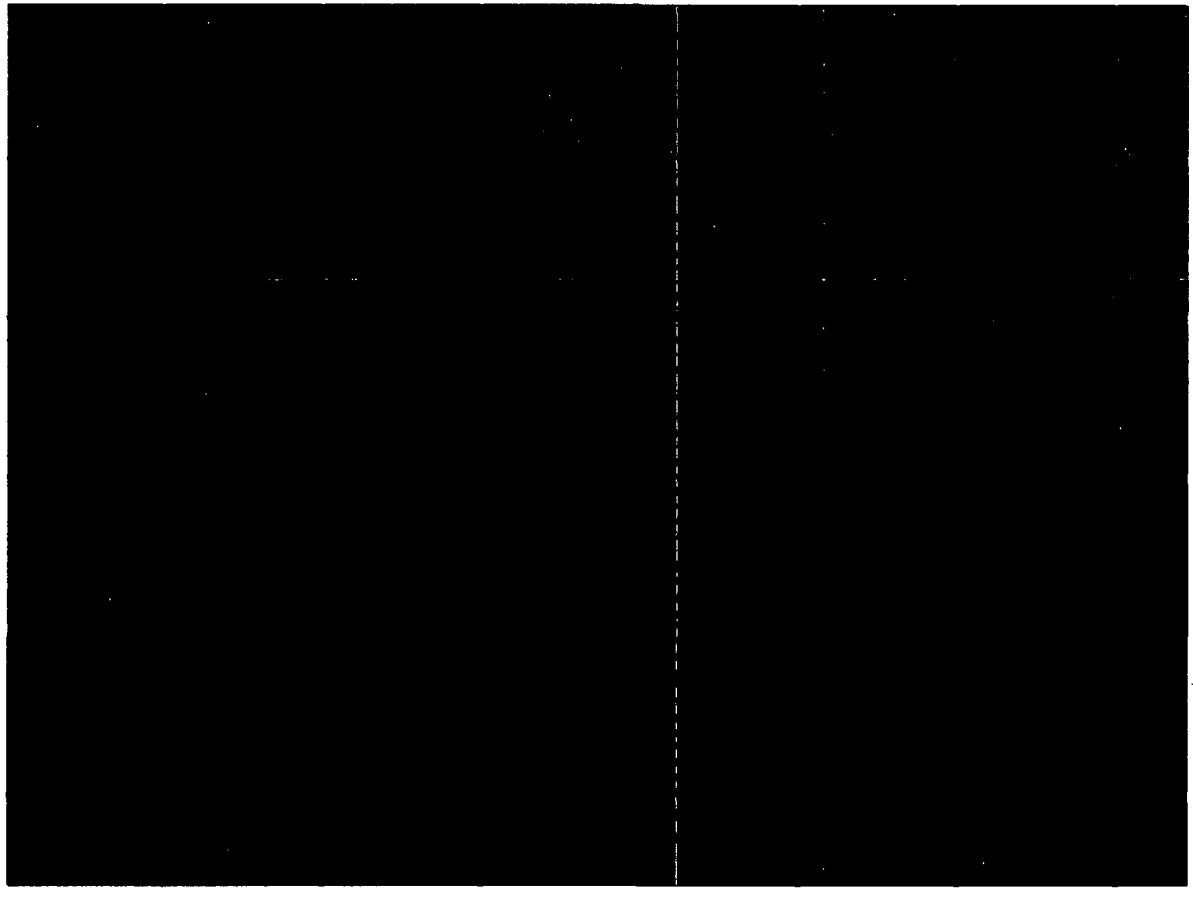

Figure 4-4 Isometric Sketch of the UFTR with Shielding Removed.

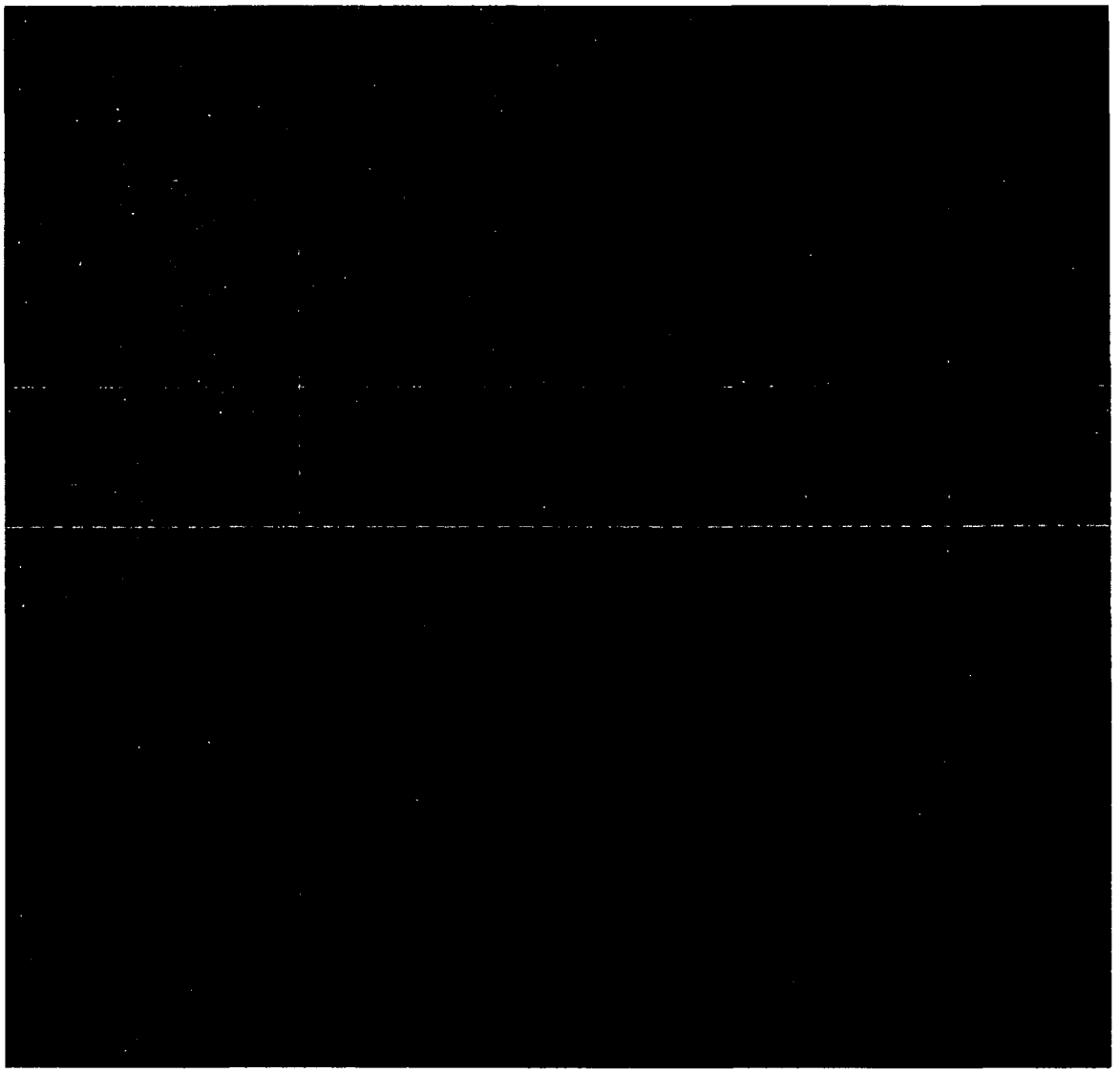

Figure 4-5 Isometric Diagram of UFTR Components

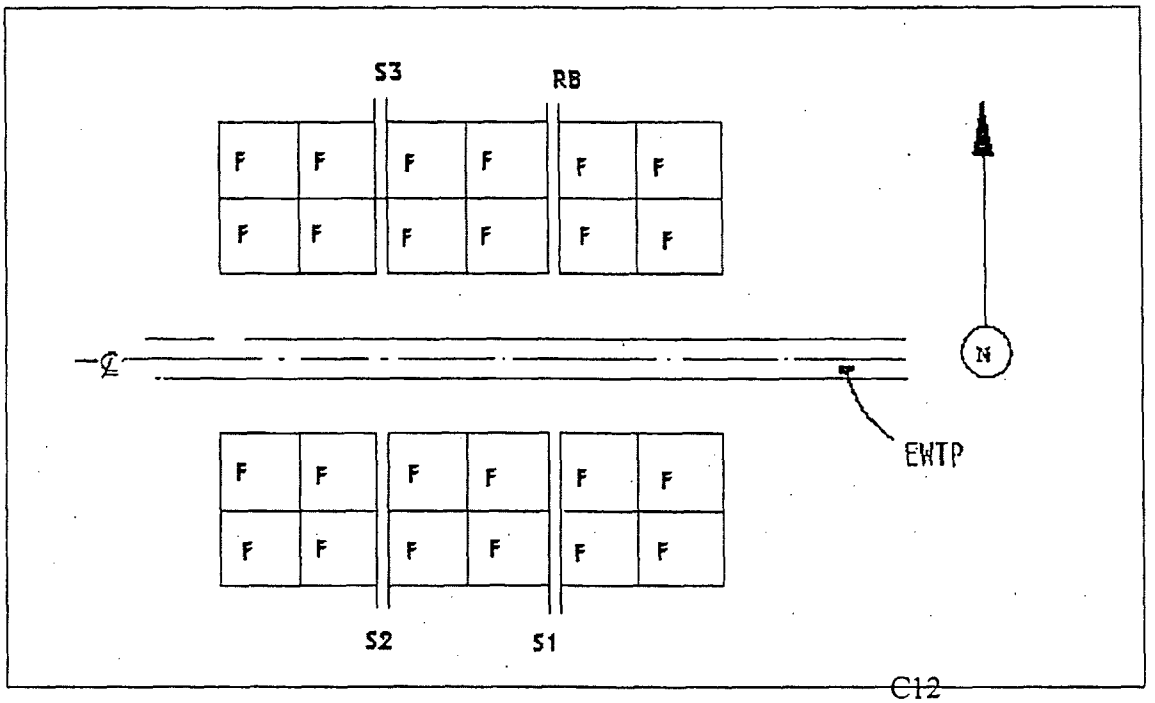

NOMENCLATURE :

F	=	FUEL BUNDLE	S1	=	SAFETY BLADE 1
RB	=	REGULATING BLADE	S2	=	SAFETY BLADE 2
			S3	=	SAFETY BLADE 3

EWTP= EAST-WEST THROUGHPORT
C12 = Reactor graded graphite

Figure 4-6 Vertical Section View of UFTR Core Illustrating Fuel and Fuel Box Arrangement

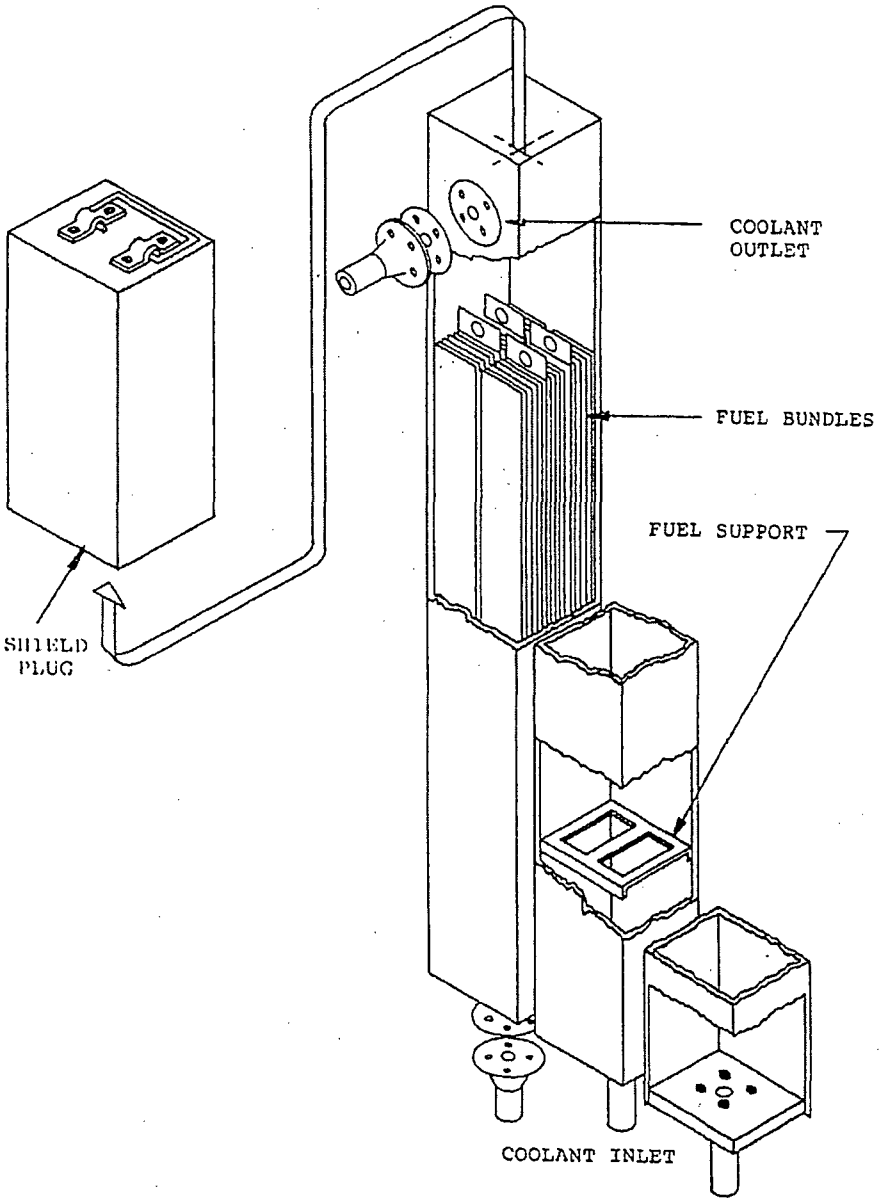

Figure 4-7 Isometric of UFTR Fuel Boxes

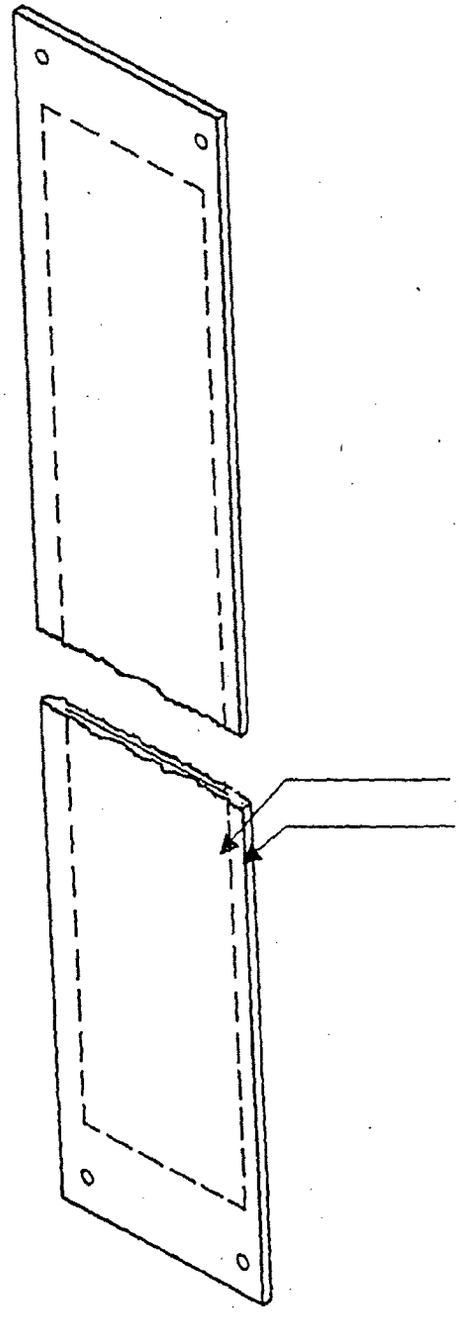

Length of plate	25.625"
Width of plate	2.845"
Thickness of plate	0.07"
Thickness of cladding	0.015"
Thickness of U-Al	0.040"
Weight of U-235 per plate	
Uranium enrichment	93%

Figure 4-8 Schematic showing UFTR HEU Fuel Plate Geometry

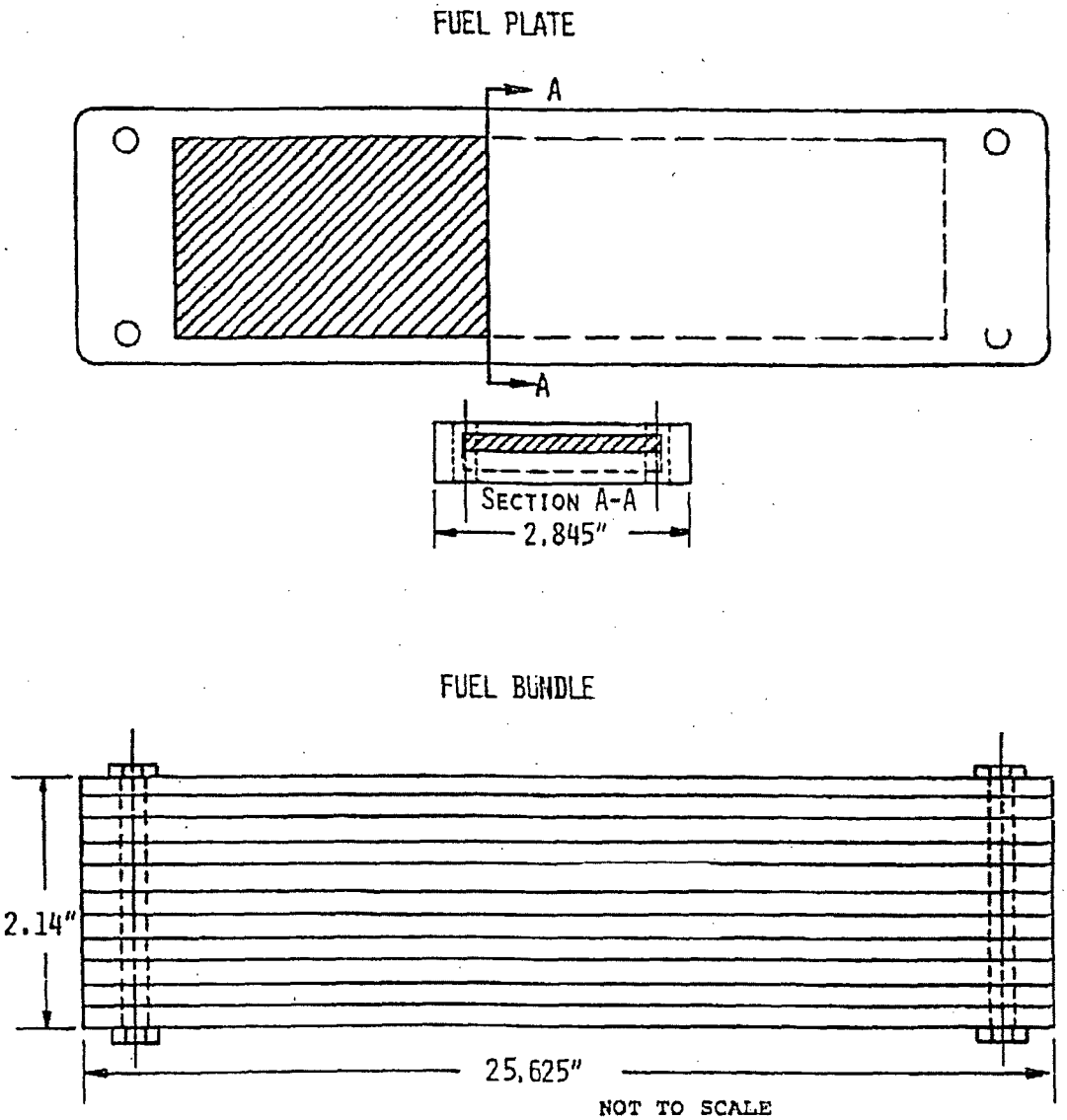

Figure 4-9 UFTR Fuel Plate and Fuel Bundle Geometric Arrangement

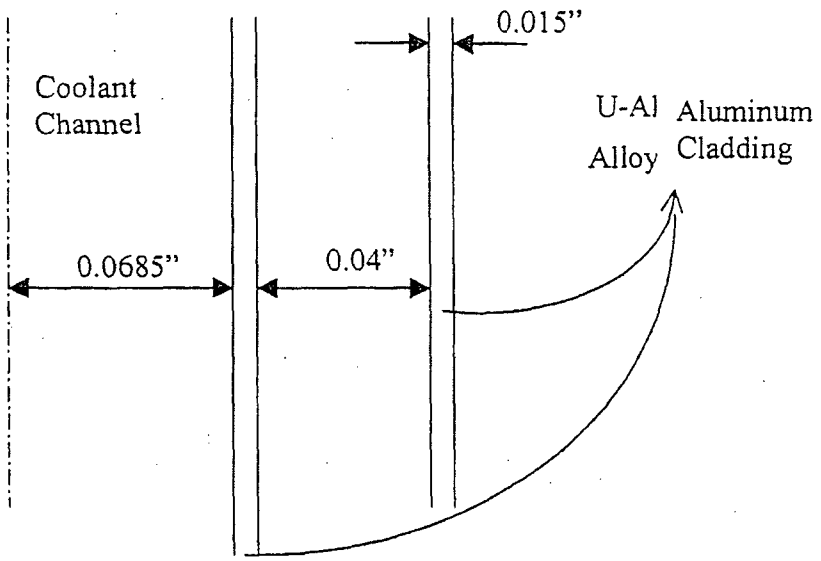

Figure 4-10 Fuel Plate/Coolant Channel Enlargement Showing UFTR Cell Arrangement Detail

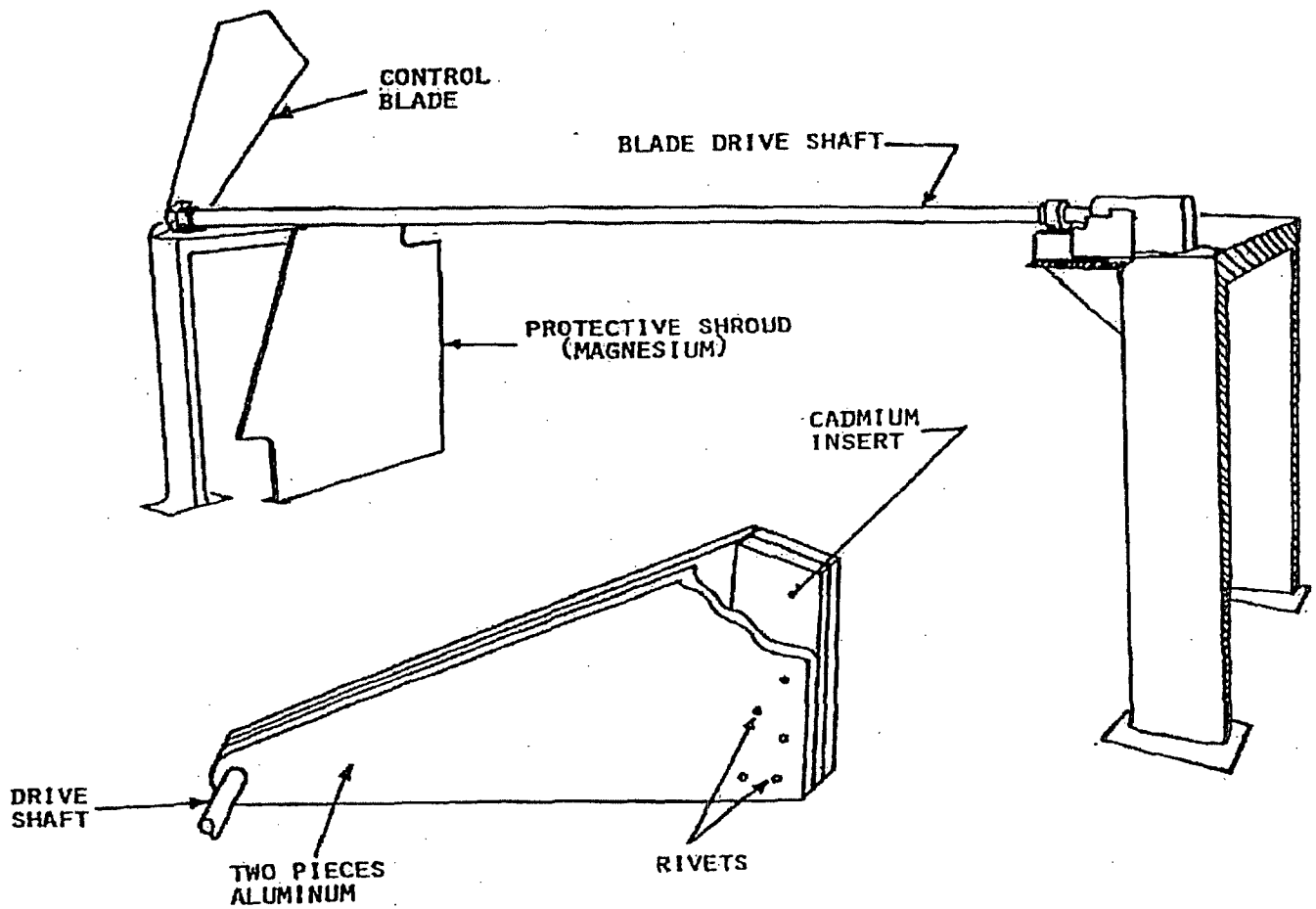

Figure 4-11 UFTR Control Blade and Drive System

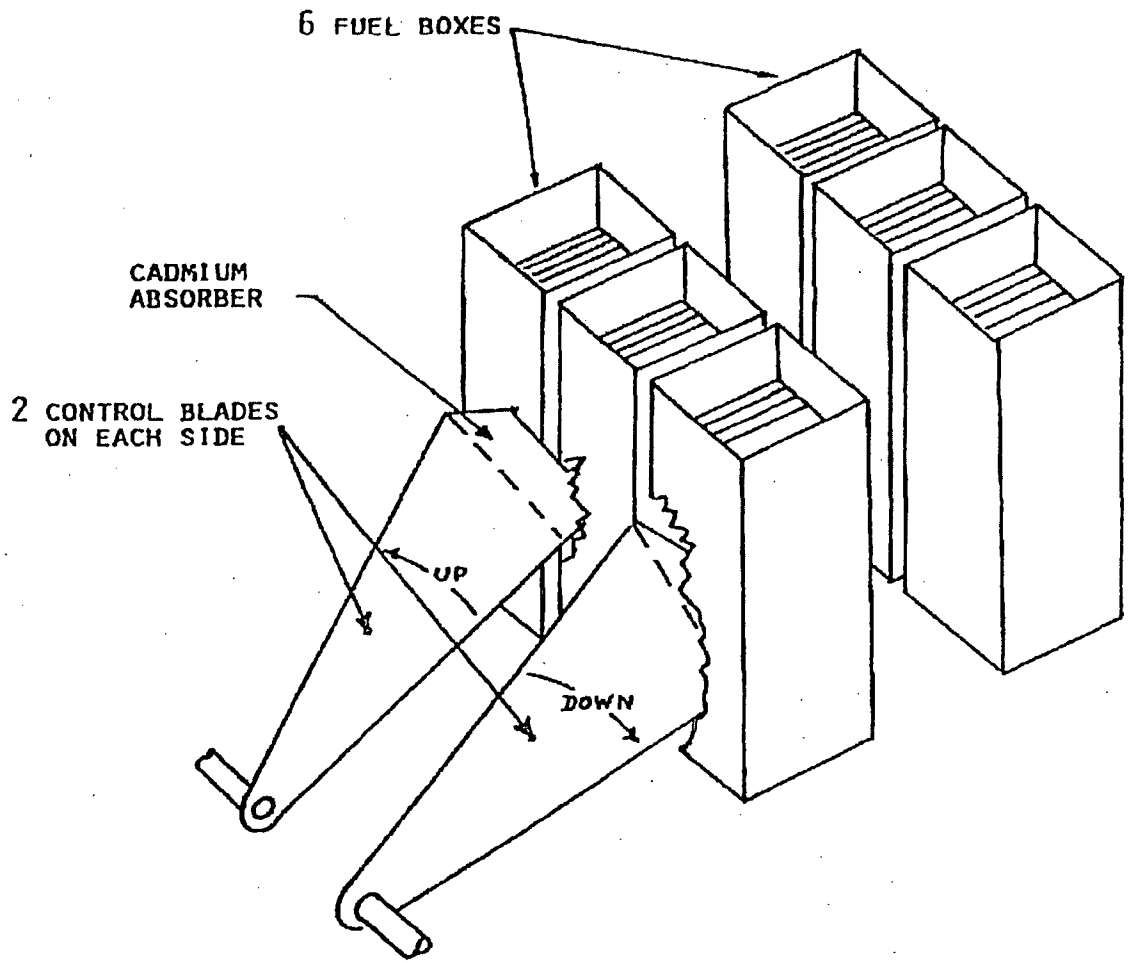

Figure 4-12 UFTR Core Sketch showing operation of Control Blades

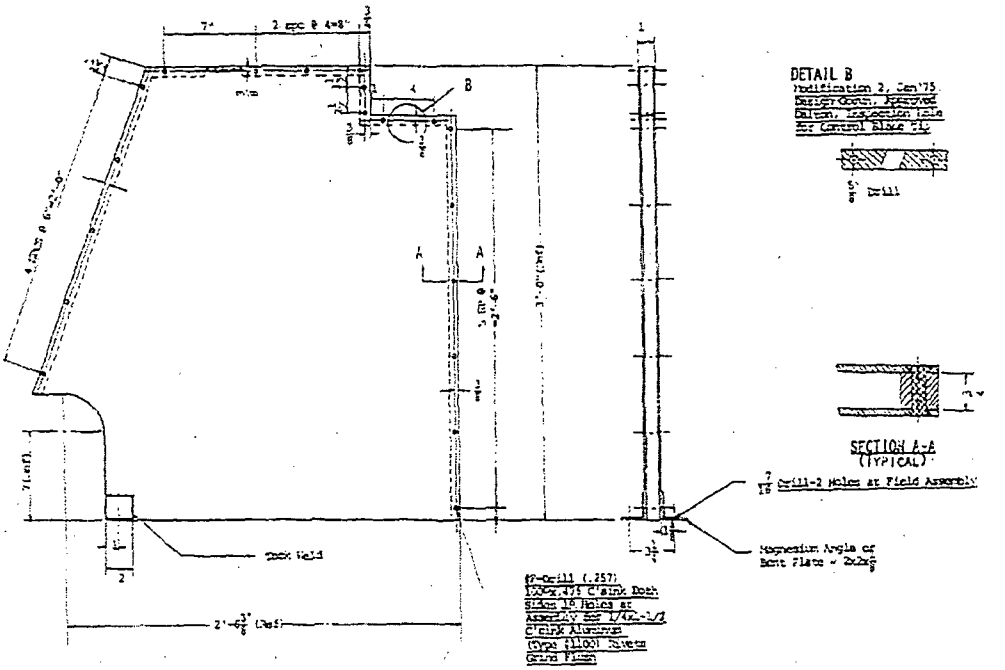

Figure 4-13 UFTR Control Blade Shroud Assembly

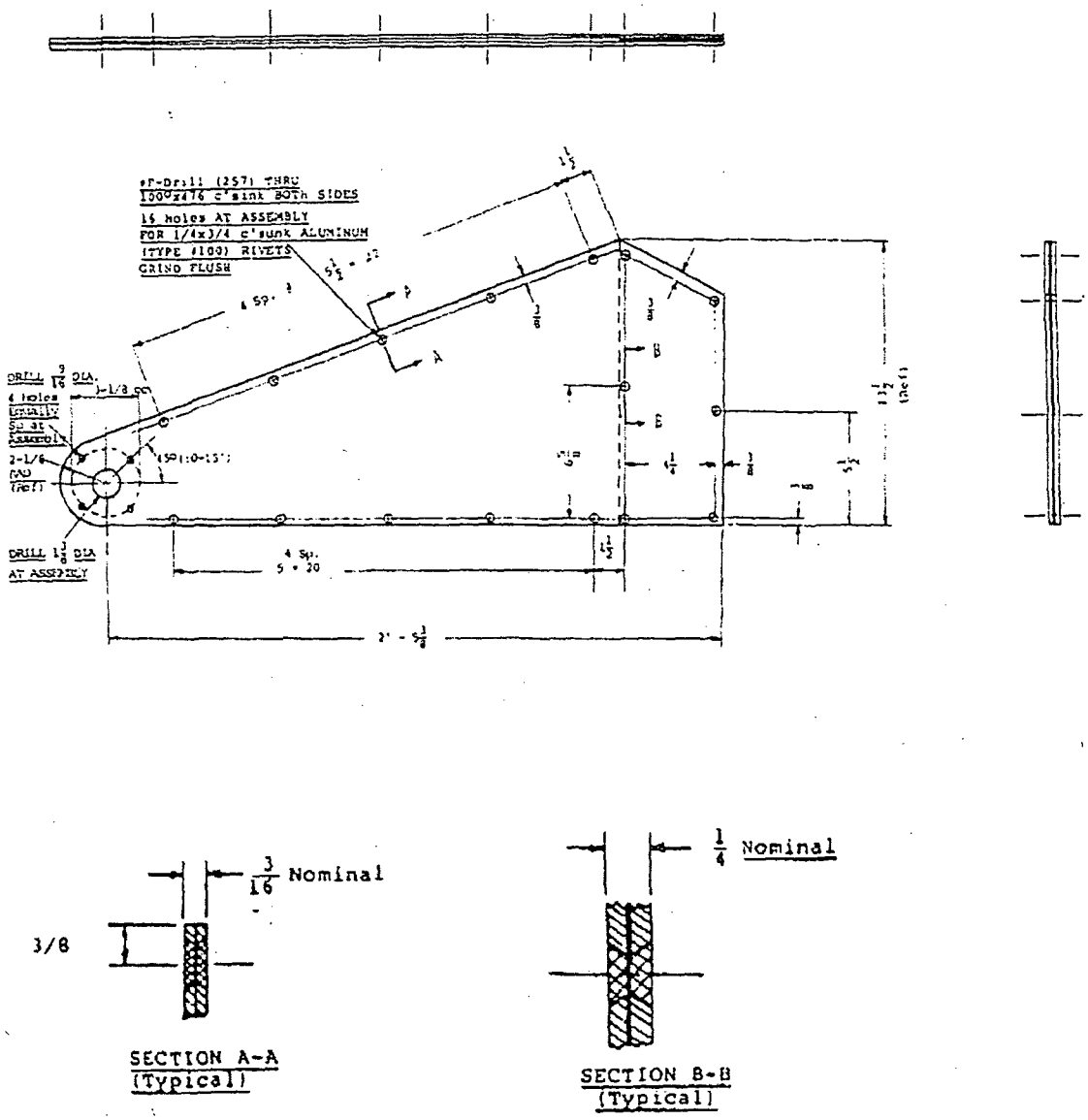

Figure 4-14 UFTR Control Blade Assembly

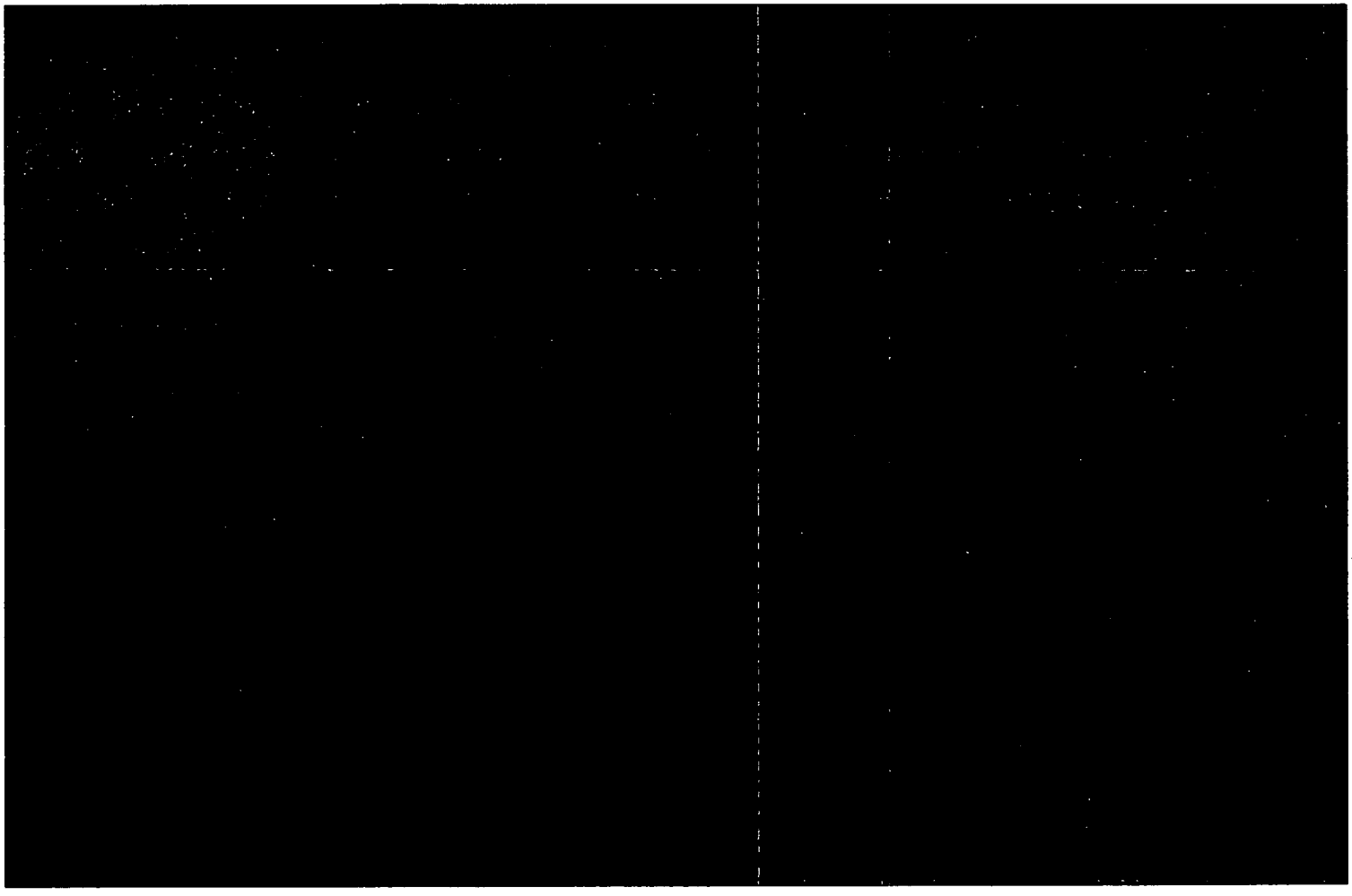

Figure 4-15 Geometric Arrangement of Major UFTR Experimental Facilities

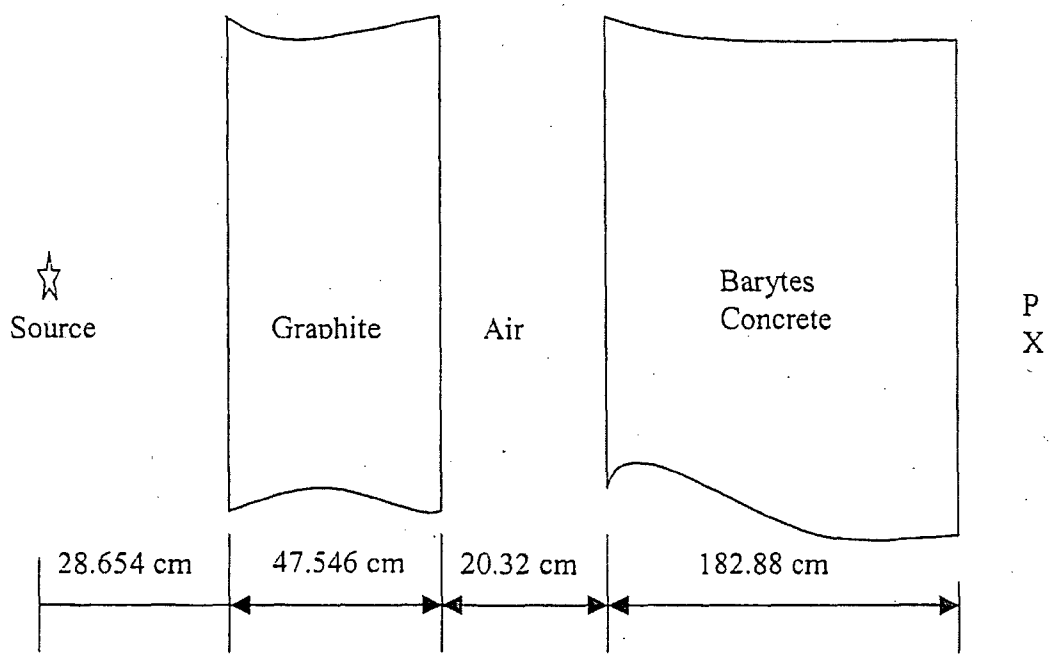

Figure 4-16 Core Gamma Shielding Model for North or South Face of the UFTR [6]

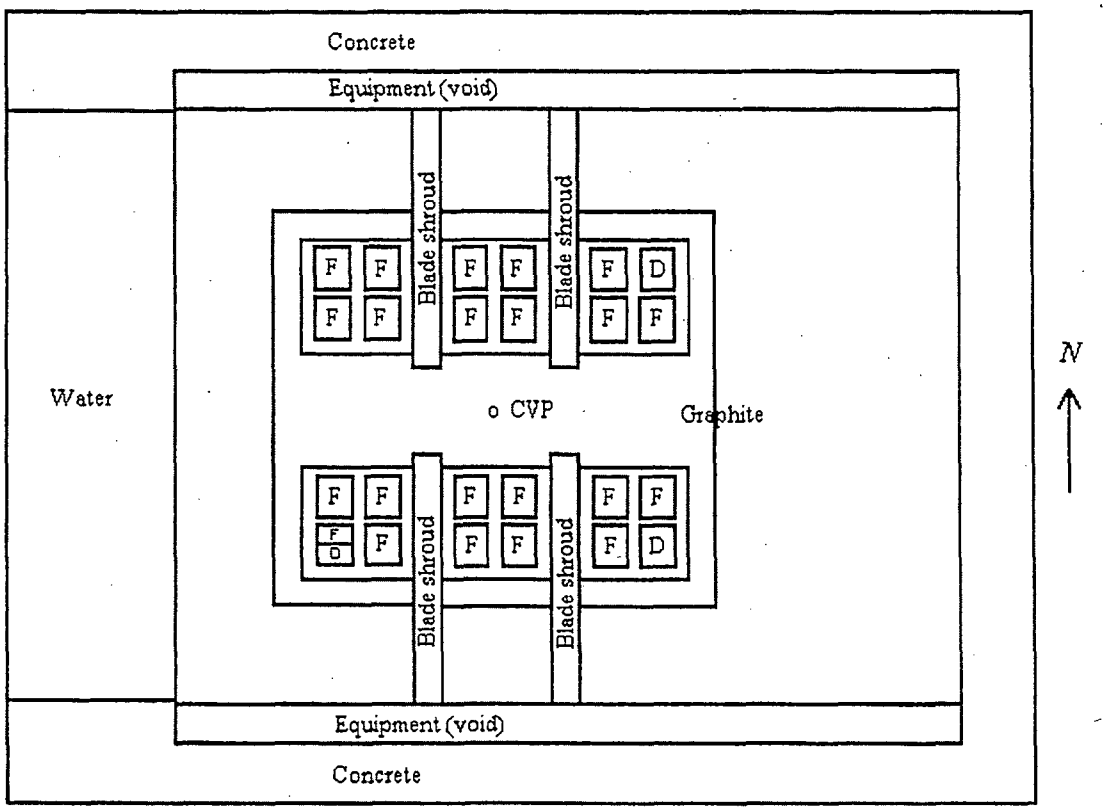

F = Fuel bundle
D = Dummy bundle

Figure 4-17 UFTR Core Map

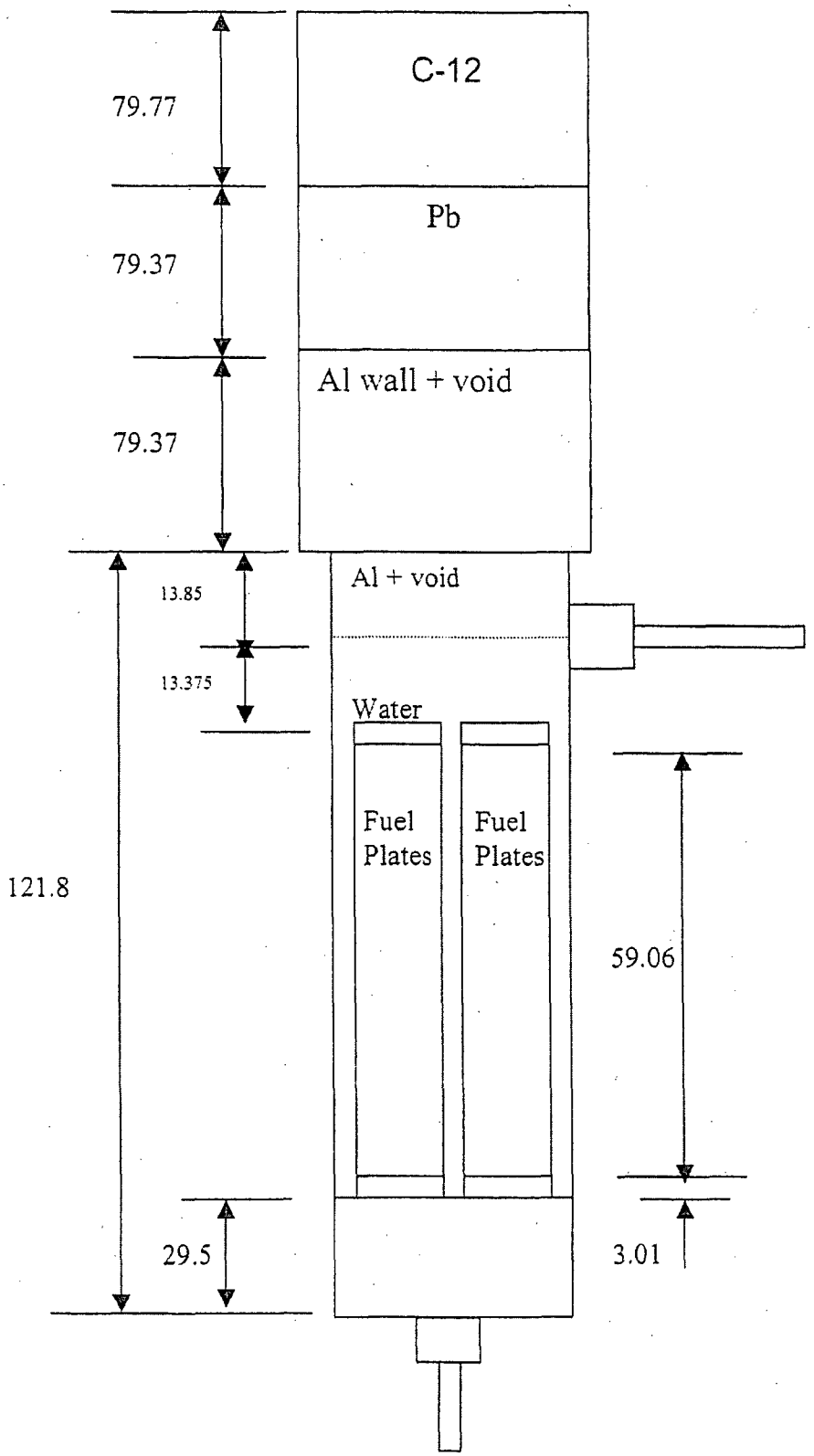

Figure 4-18 UFTR Fuel Box Axial View, dimensions in mm

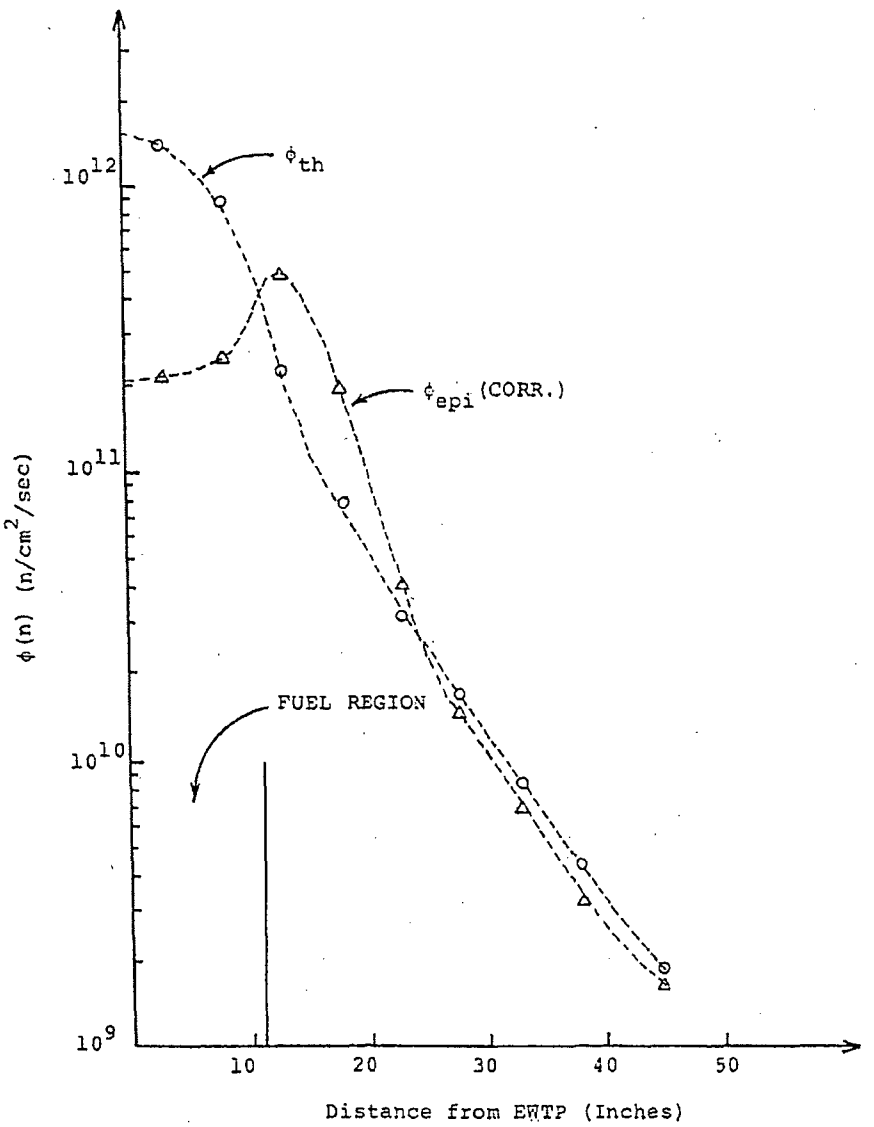

Figure 4-19 UFTR Absolute Flux Measurements Results in CVP (Gold Foil) [2]

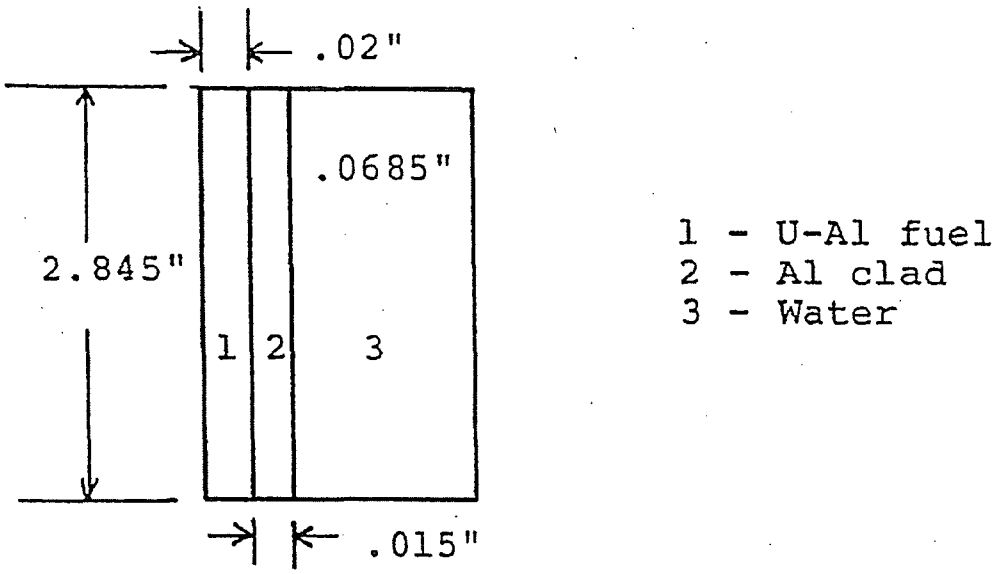

Figure 4-20 UFTR Fuel Plate unit Cell [6]

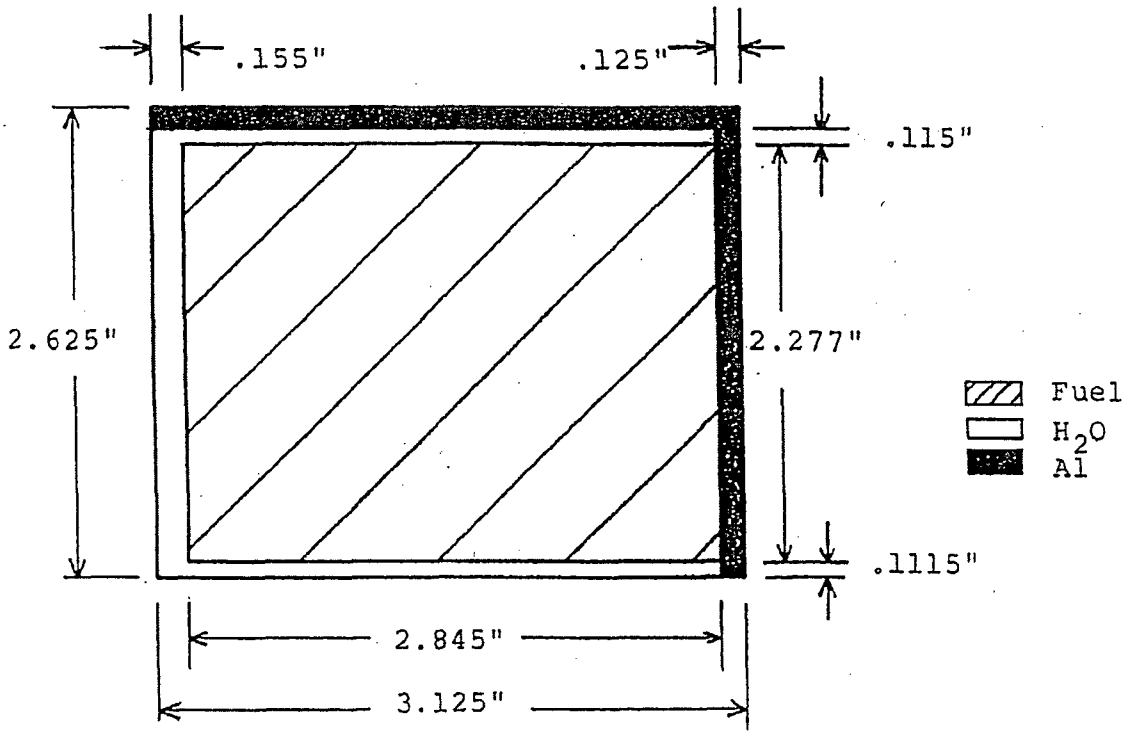

Figure 4-21 UFTR Quarter Fuel Box Unit Assembly [6]

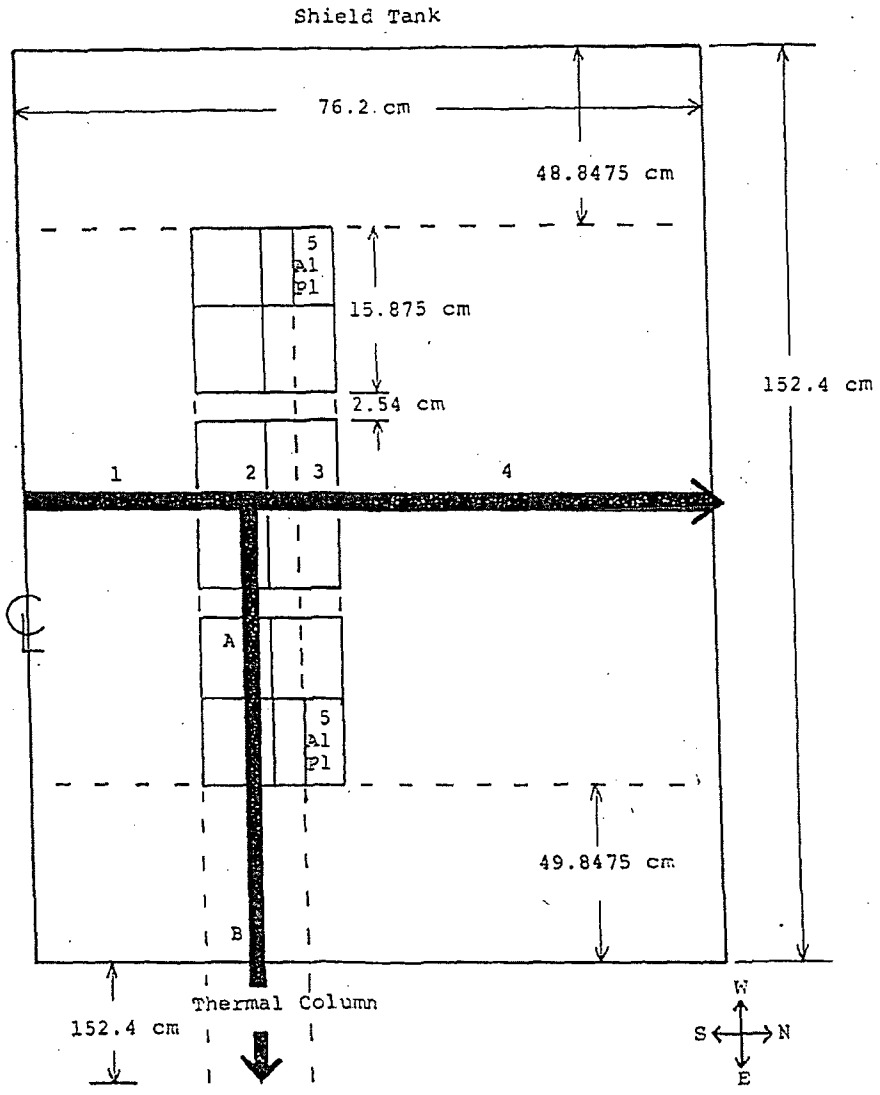

Figure 4-22 Model of UFTR Core region (Top View) used for CORA Calculations [6]

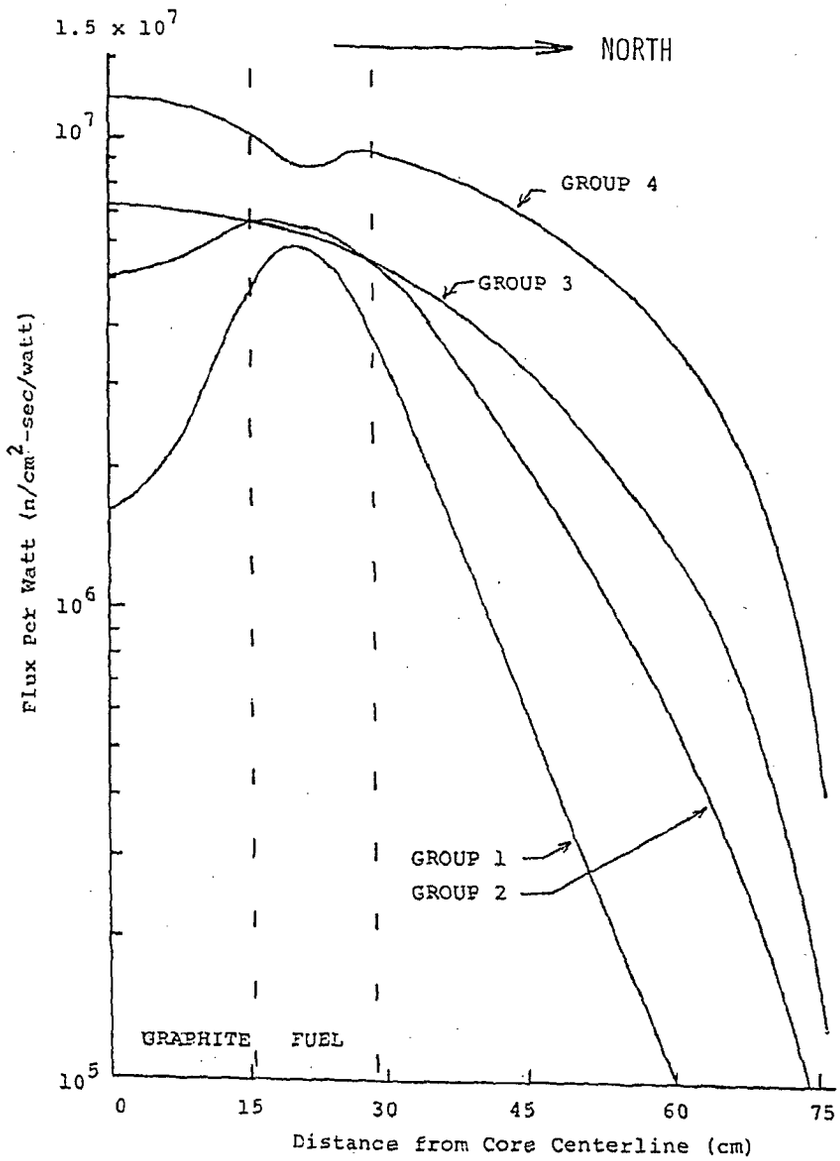

Figure 4-23 Group-dependent Fluxes Along the North-South Direction – Cora Code Calculations [6]

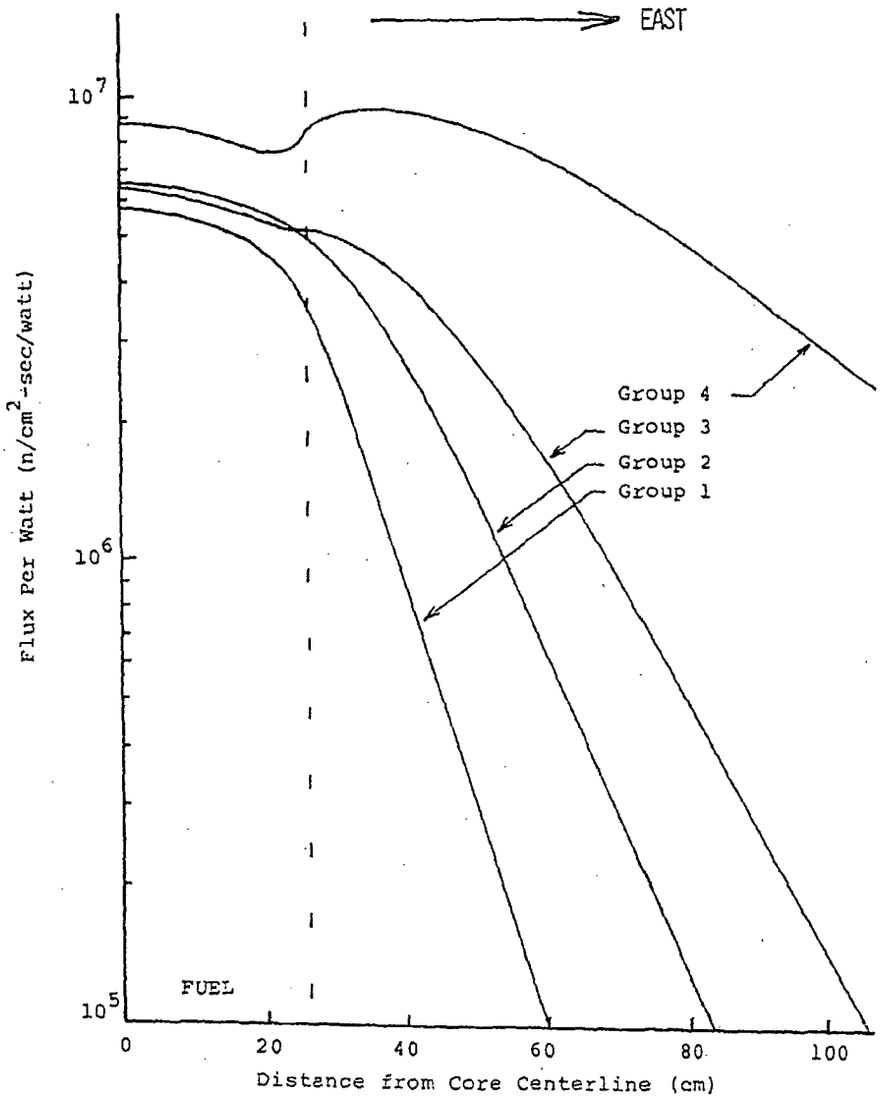

Figure 4-24 Group-dependent Fluxes Along the East-West Direction – Cora Code Calculations [6]

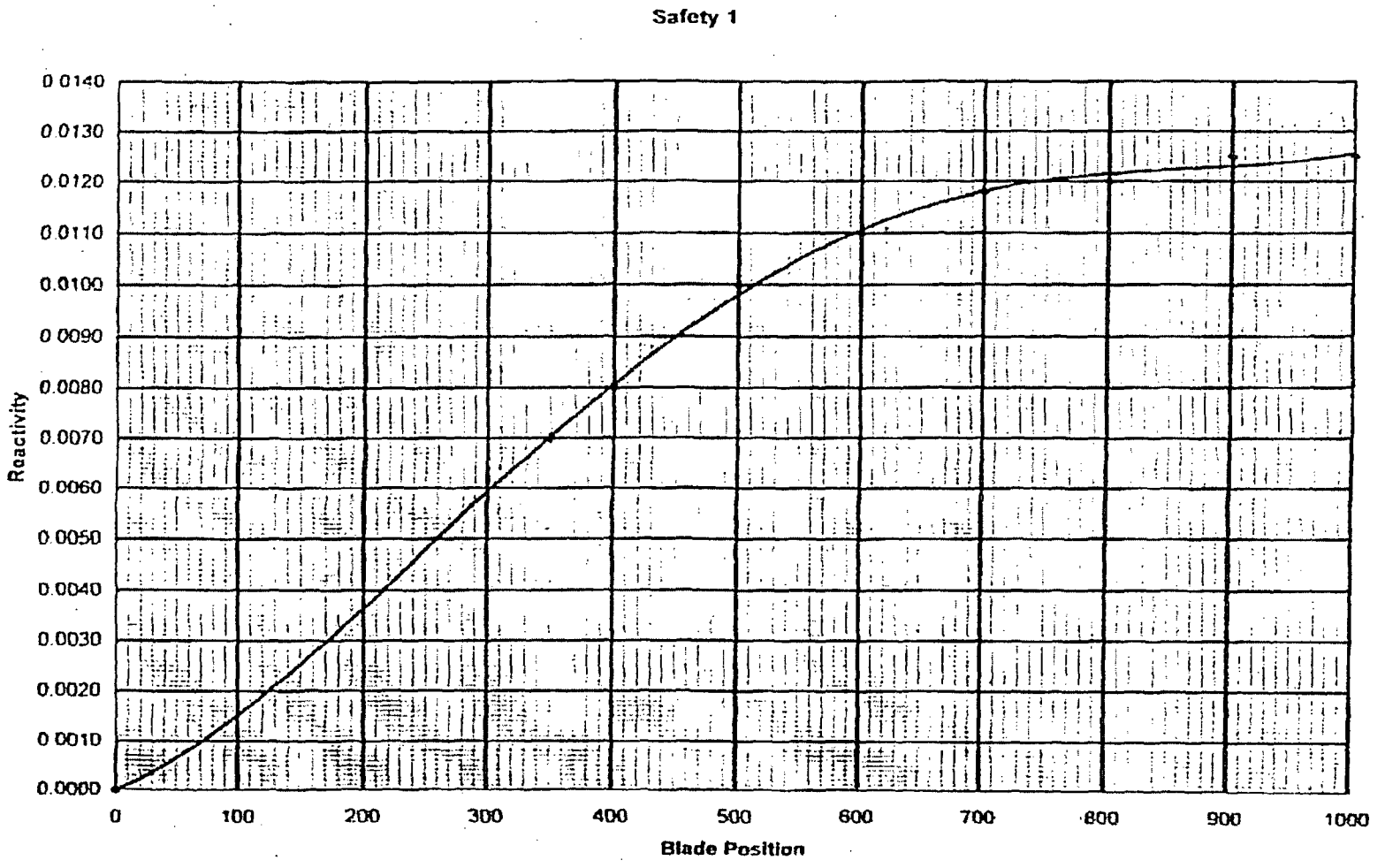

Figure 4-25 Reactivity Integral Rod Worth Curve for UFTR Safety Blade #1

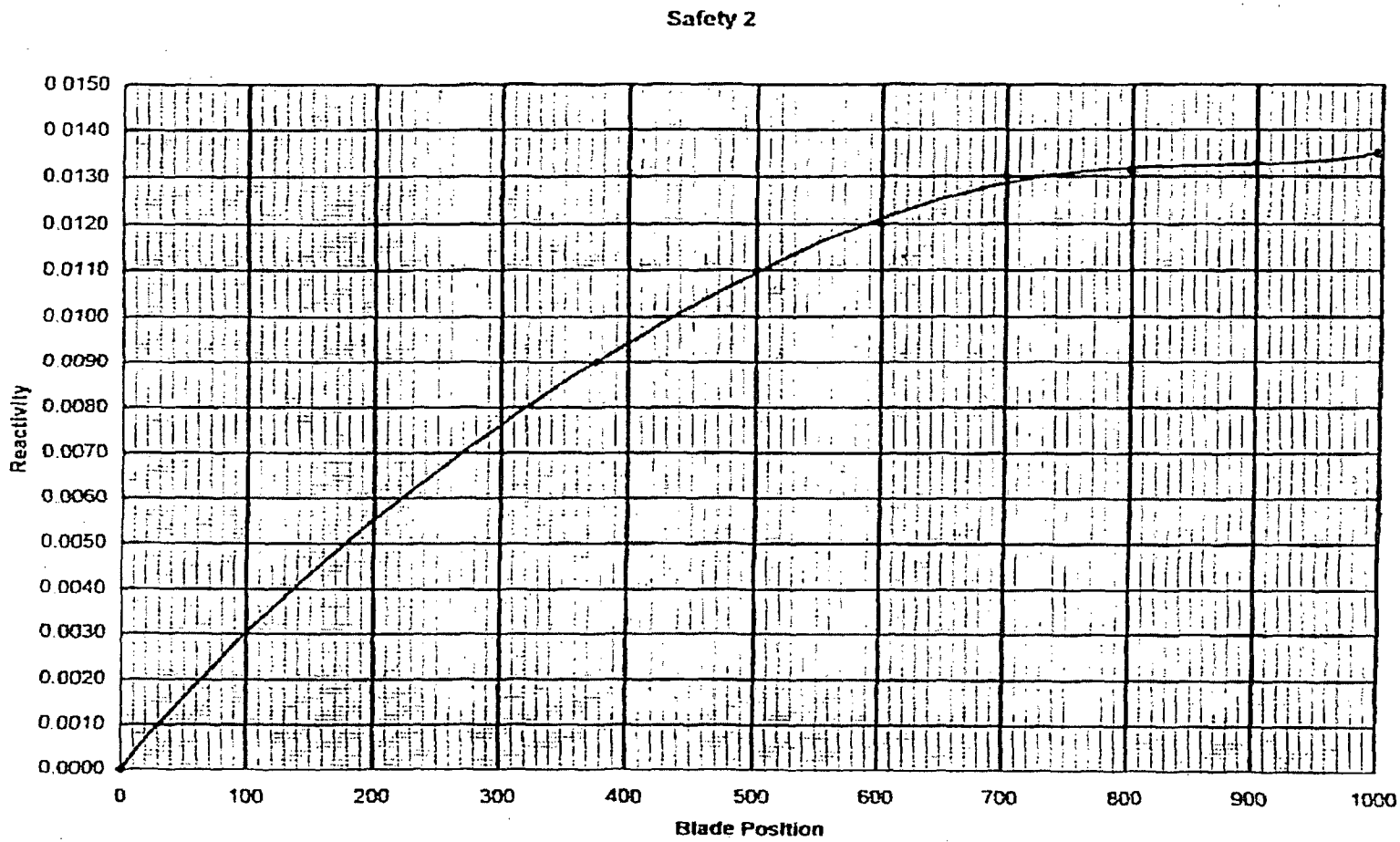

Figure 4-26 Reactivity Integral Rod Worth Curve for UFTR Safety Blade #2

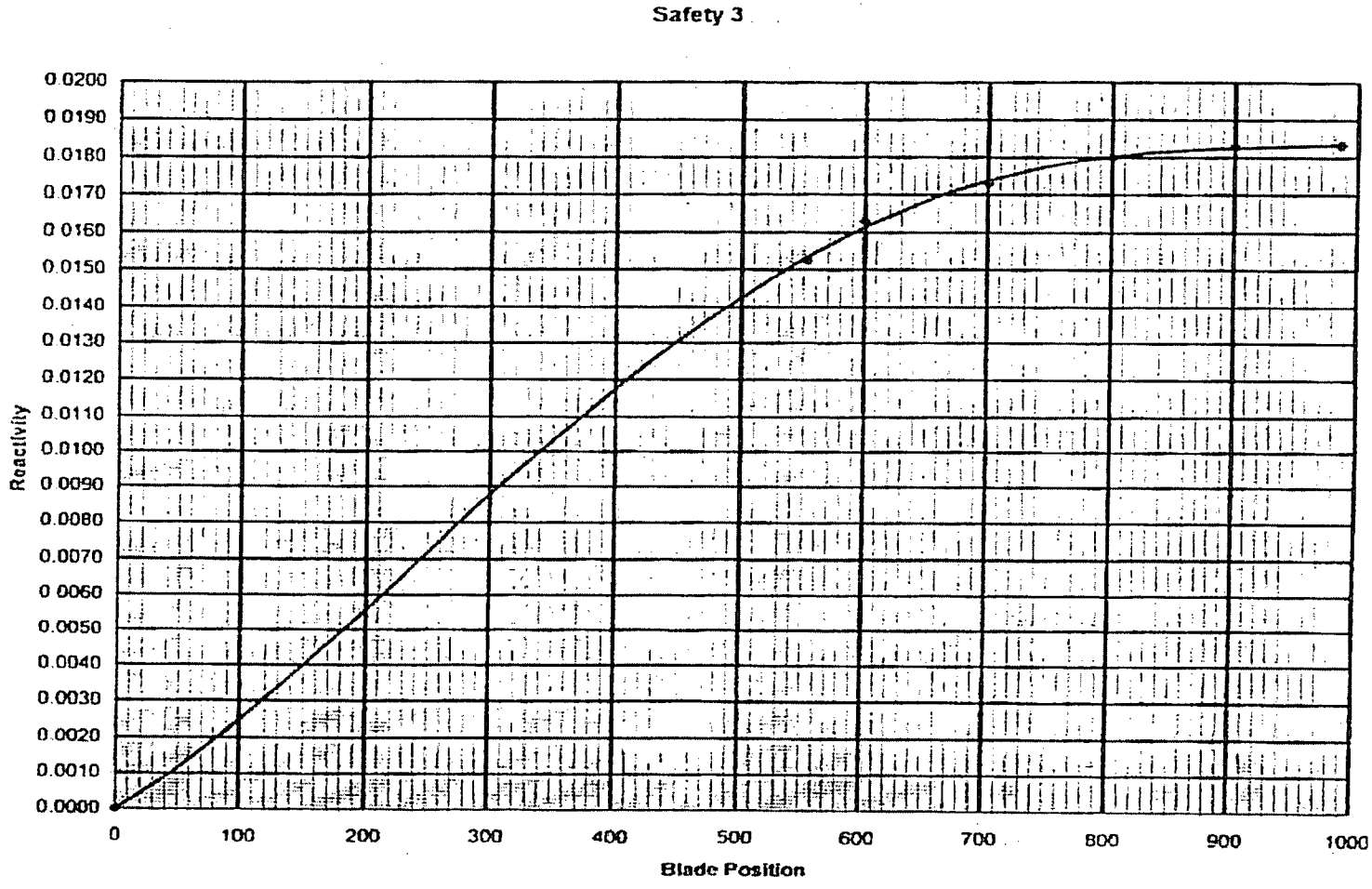

Figure 4-27 Reactivity Integral Rod Worth Curve for UFTR safety Blade #3

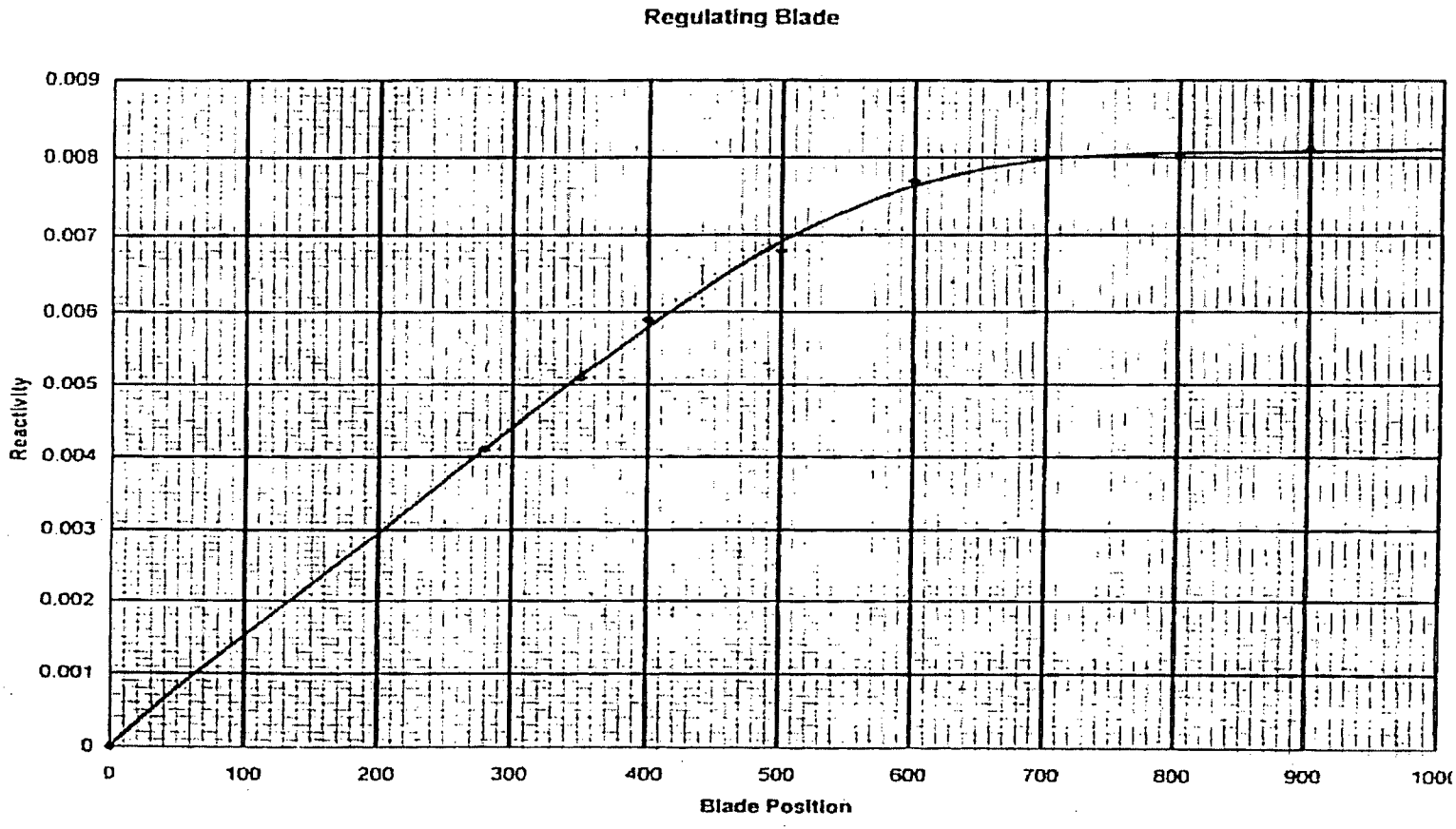

Figure 4-28 Reactivity Integral Rod Worth Curve for UFTR Regulating Blade

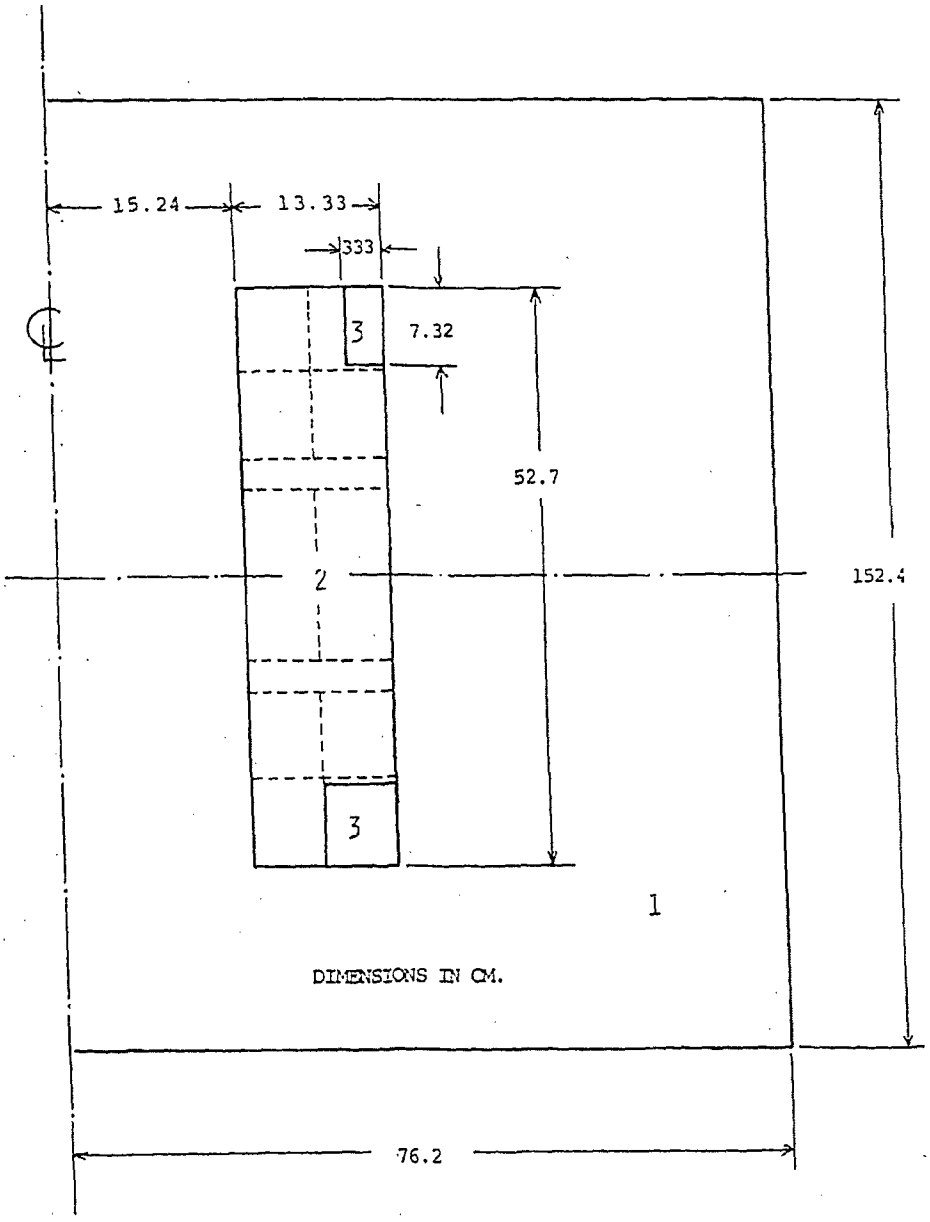

Figure 4-29 Reactor Model Used for Exterminator Code Calculation[19]

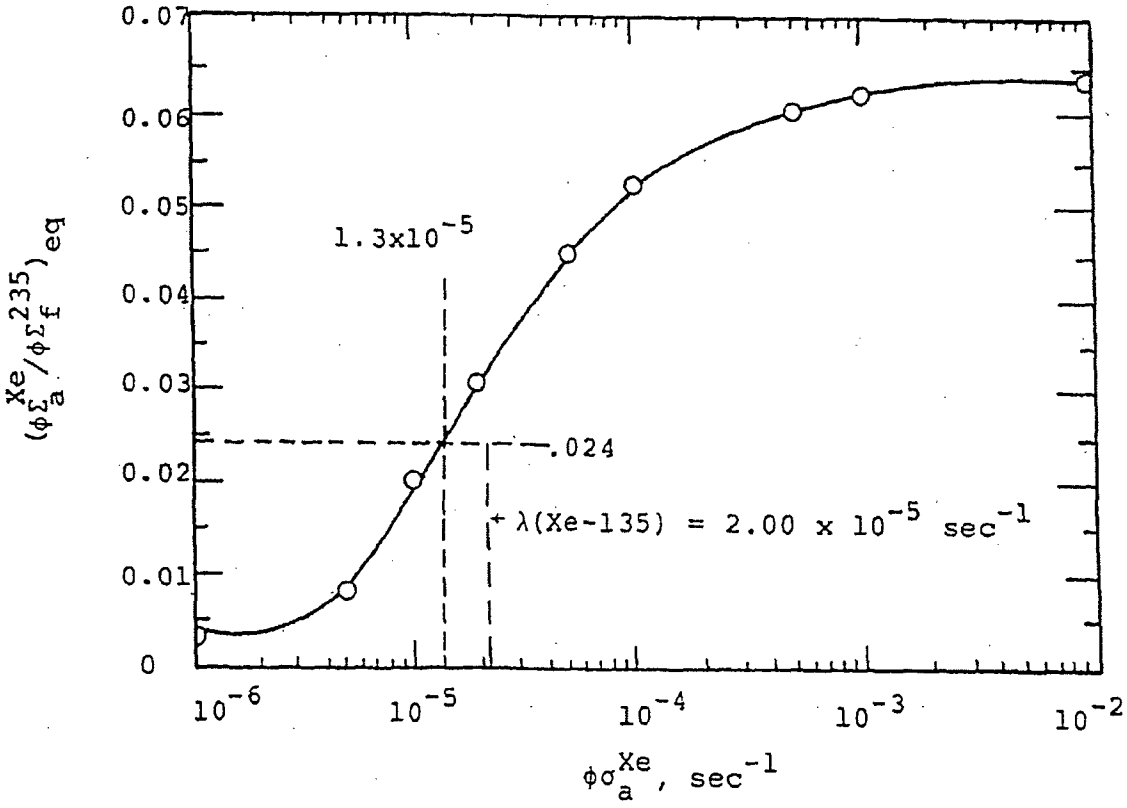

Figure 4-30 Equilibrium Xenon-135 in a Highly Enriched Reactor [21]

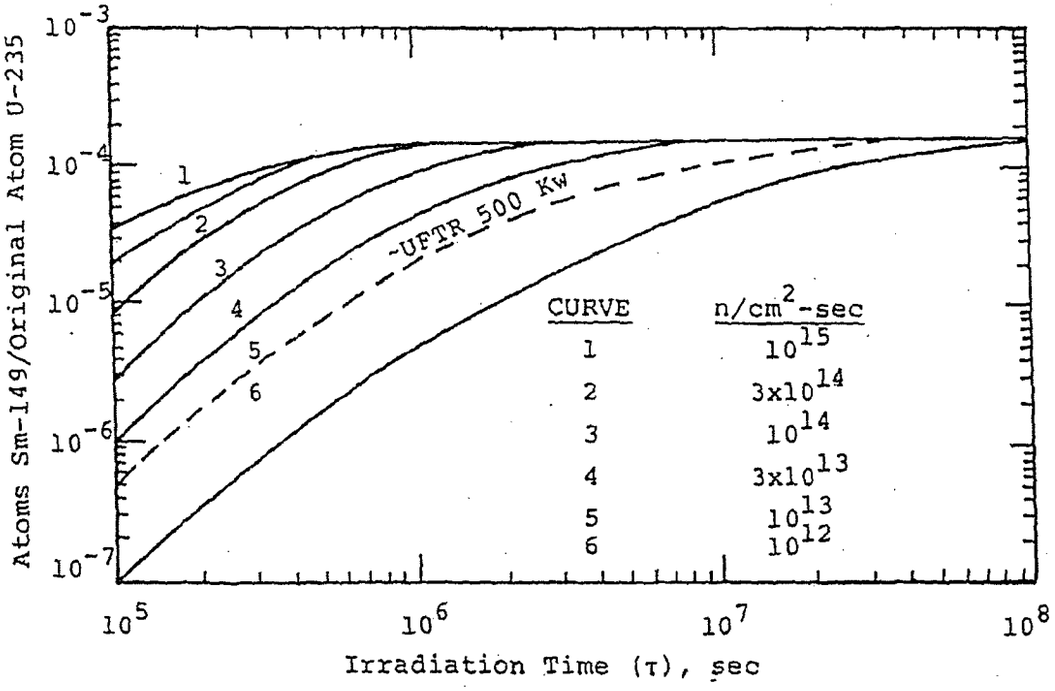

Figure 4-31 Samarium-149 Buildup with Irradiation Time [21]

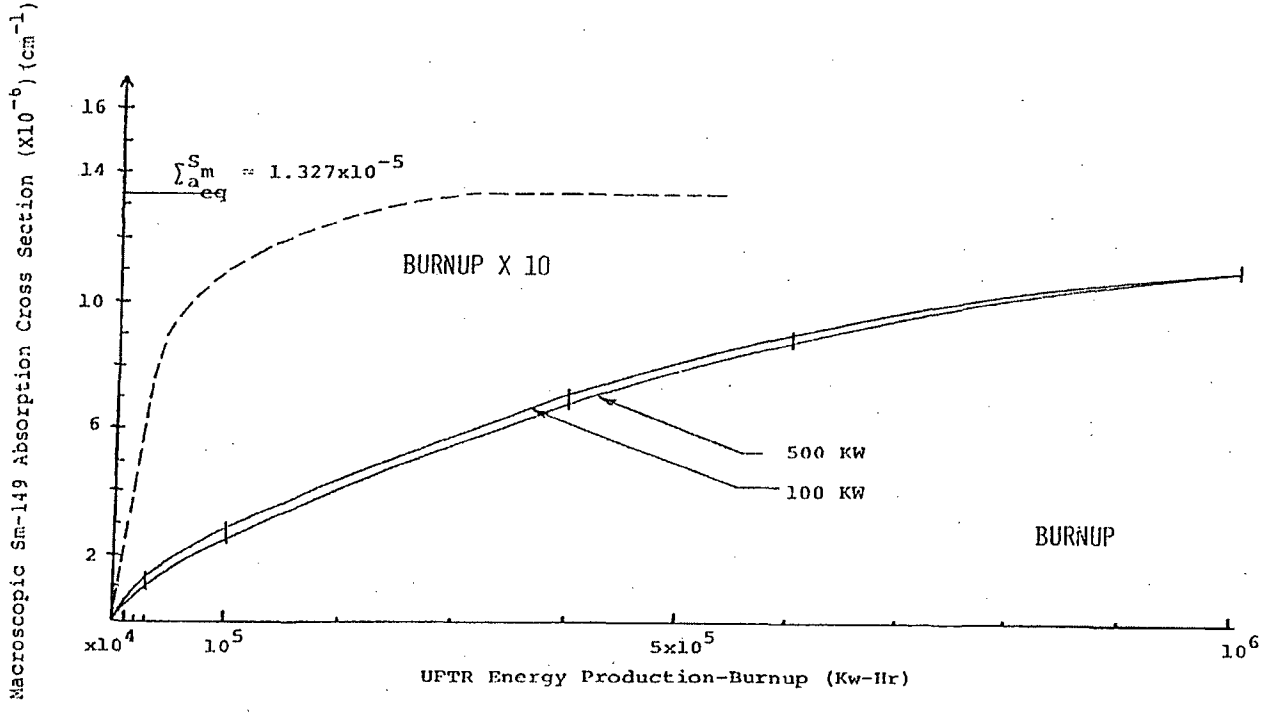

Figure 4-32 Samarium-149 Buildup for Operation at 100 and 500 kWth [19]

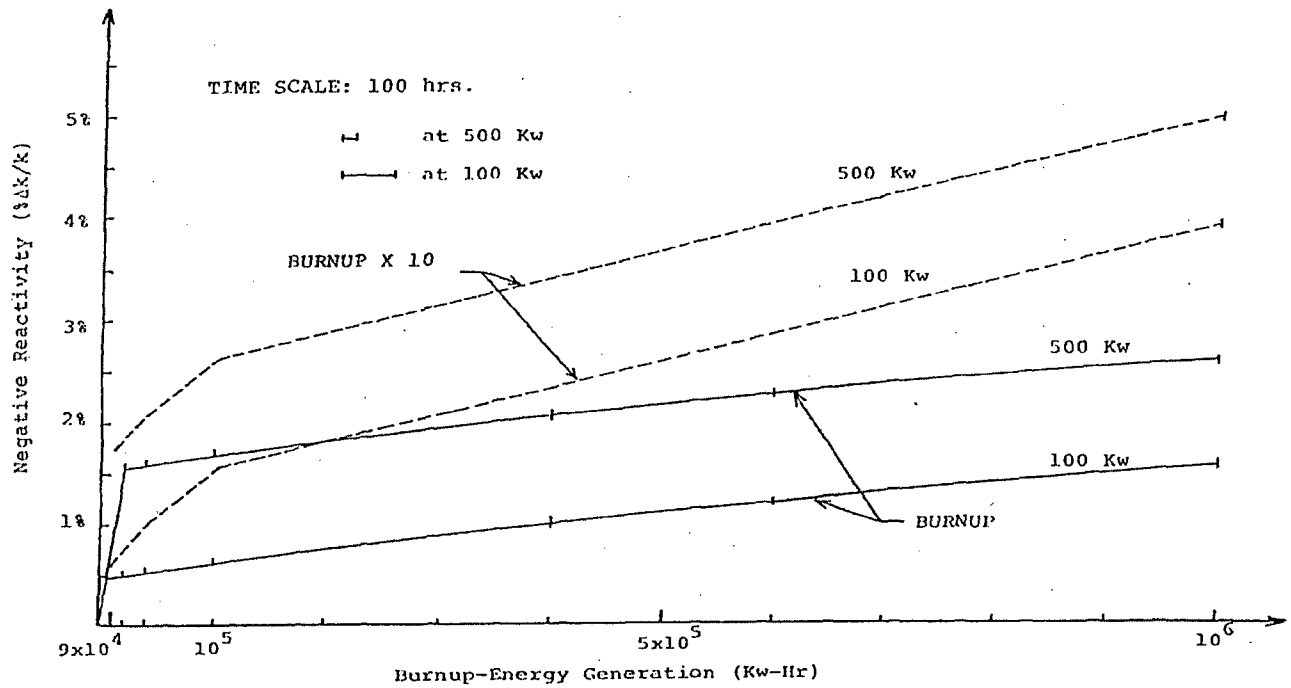

Figure 4-33 Reactivity Drop with Burn-up for Operation at 100 and 500 kW [19]

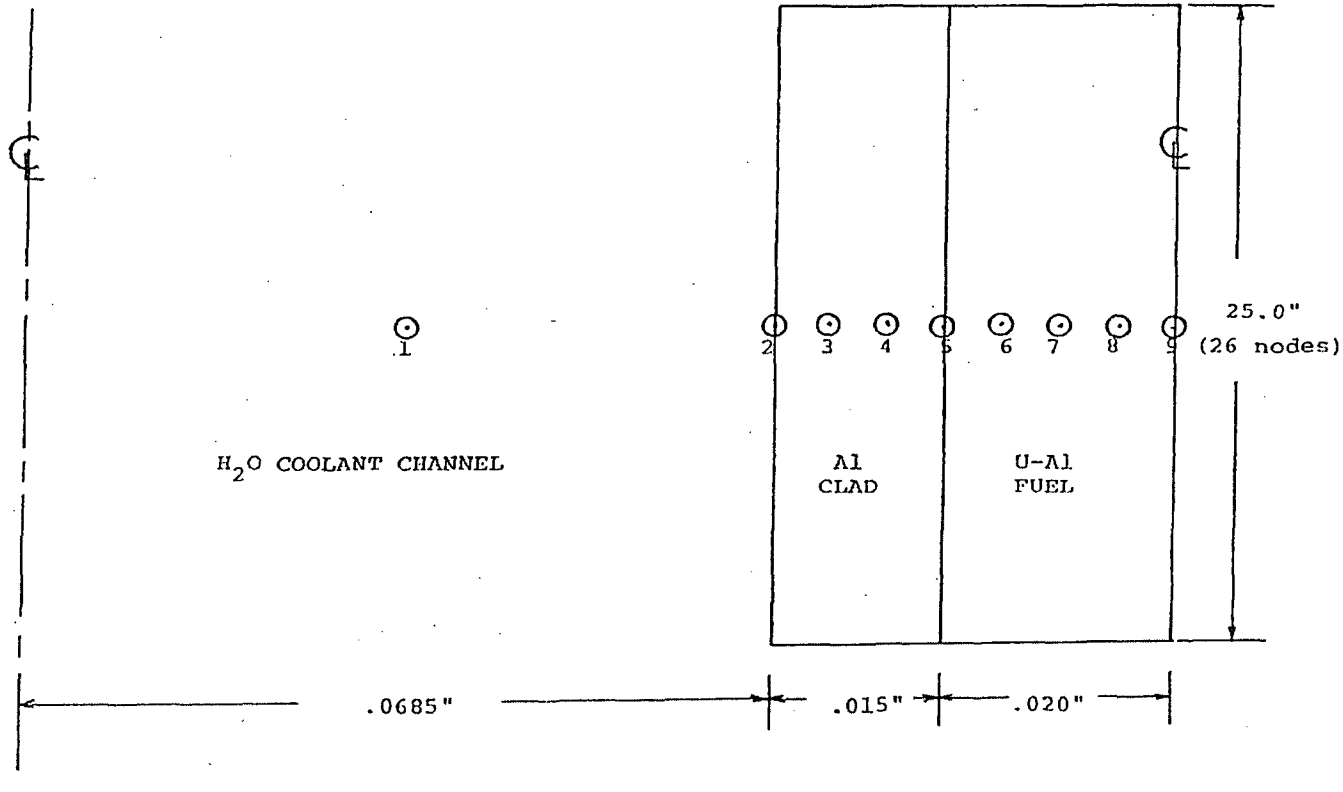

Figure 4-34 Grid for Nodal Point Distribution Used for UFTR Heat Transfer Calculation [6]

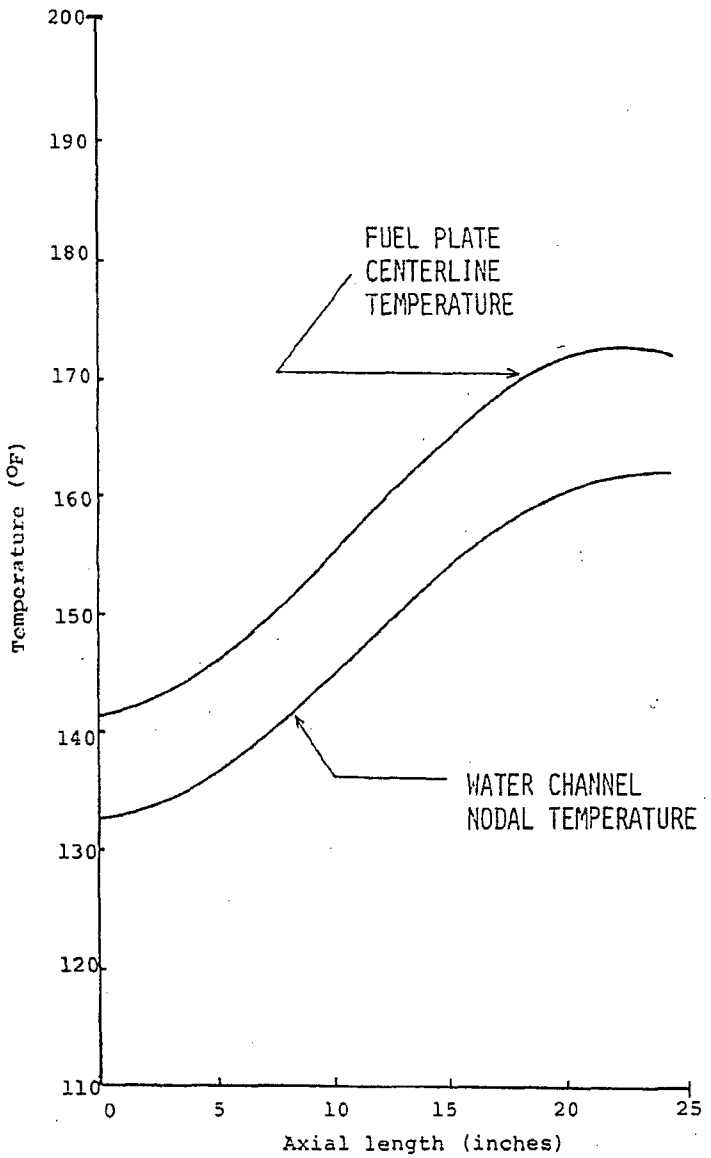

Figure 4-35 Temperature Distribution of the "Hottest" Fuel Plate and Water Channel at 100 kWth (Coolant Flow rate = 31.2 gpm)[6]

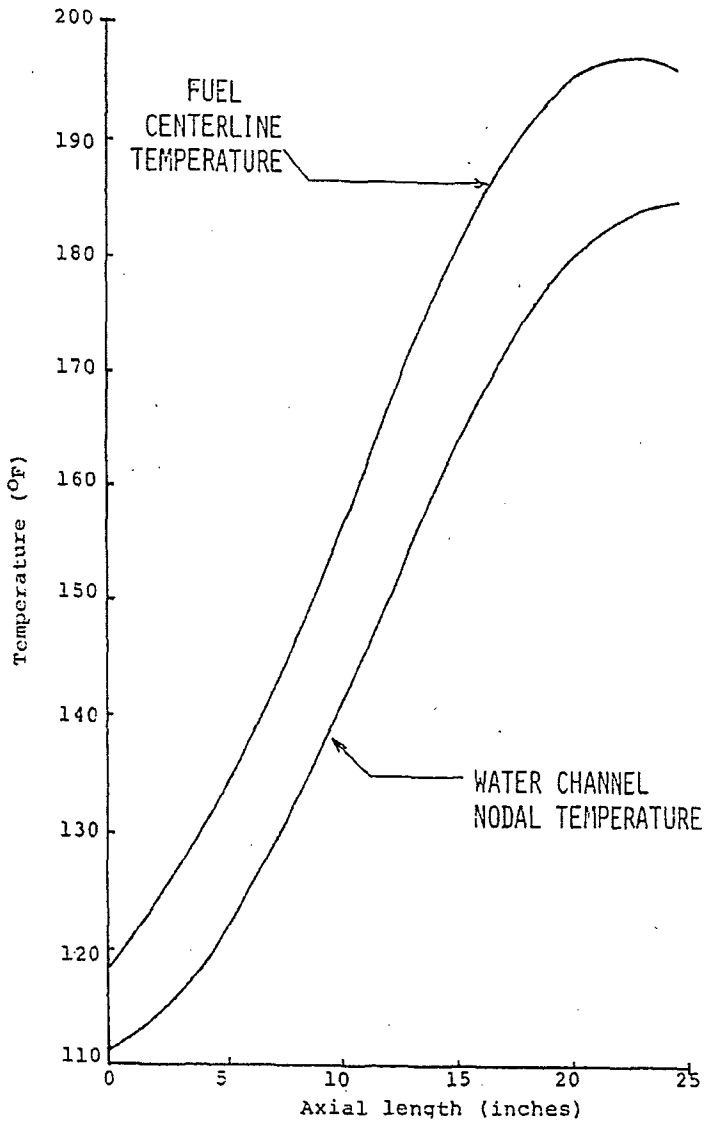

Figure 4-36 Temperature Distribution of the "Hottest" Fuel Plate and Water Channel at 500 kWth (Coolant Flow rate = 65 gpm) [6]

REFERENCES:

1. International Atomic Energy Agency, RRDB *Research Reactor Data Base*. 2001, IAEA.
2. J.A. Zuloaga, J., *"Operational Characteristics of the Modified UFTR"*, Master's Thesis Project in *Department of Nuclear and Radiological Engineering*. 1975, University of Florida: Gainesville, Fl.
3. Listing, L., *A two dimensional neutronic calculation and a summary of modifications and technical specification changes for 500 kWth operation of the UFTR*, Master's Thesis Project in *Department of Nuclear and Radiological Engineering*. 1974, University of Florida: Gainesville.
4. Hawley, S.C., R.L. Kathren, and M.A. Robkin, *Analysis of Credible Accidents for Argonaut Reactors NUREG/CR-2079 PNL-3691*. 1981, U. S. Nuclear Regulatory Commission.
5. Glasstone, S. and A. Sesonske, *Nuclear Reactor Engineering - Reactor Design Basics*. 4th ed. Vol. 1. 1994: Chapman & Hall.
6. Wagner, W.A., *Feasibility Study of 500 kWth Operation of the University of Florida Training Reactor*, Master's Thesis in *Department of Nuclear and Radiological Engineering NRE*. 1973, Florida: Gainesville.
7. Jaeger, R.G., *Engineering Compendium on Radiation Shielding*. Vol. I. 1968, Heidelberg, Germany: Springer-Verlag New York Inc.
8. Case K.M.et al, *Introduction to the Theory of Neutron Diffusion*. June 1953, USAEC Report.
9. III, T.R., *Reactor Shielding Design Manual*. March 1956, New York: Mc Graw Hill Book Co Inc.
10. Walker, R.L. and M. Grotenhuis, *A Summary of Shielding Constants for Concrete*. November 1961, Argonne National Laboratories.
11. Abramowitz, M. and I.A. Stegun, *Handbook of Mathematical Functions*. 1965, New York: Dover Publications. 238-243.
12. *Reactor Experiments*, in *General Catalog n.11*. 1971-1972: San Carlos, California.
13. UFTR staff, *Q5 Quarterly Radiological Survey of Restricted Areas*. 2001, UFTR - UF: Gainesville.
14. Bennett, C.L. and W.L. Purcell, *BRT-1: Battelle-Revised-Thermos BNWL-1434*. 1970.
15. Curtis, R.L., *"PHROG - A Fortran-IV Program to Generate Fast Neutron Spectra and Average Multigroup Constants" IN -1435 and IDO 1719, August 1970.*
16. Putnam,G.E. and Anderson E.C., *"CORA: A few group Diffusion Theory Code for One Dimensional Reactor Analysis" IN-1415 and IDO-17199*. August, 1970.
17. DeMartino, R., *Static Calculations of the UFTR HEU Core*, in *Department of Nuclear and Radiological Engineering*. 1991, University of Florida: Gainesville.
18. Otaduy, P.J., *Burn-up and Fuel Management Studies for the UFTR at 500 kW*, Master's Thesis in *Department of Nuclear and Radiological Engineering*. 1974, University of Florida: Gainesville.

19. Fowler, T.B., M.L. Tobias, and D.R. Vondy, *Exterminator-II A Fortran-IV code for solving multigroup neutron diffusion equations in two dimensions, USAEC Report ORNL-4078*. April, 1967, Oak Ridge National Laboratory
20. Lamarsh, J.R., *Introduction to Nuclear Engineering*. 2nd Edition ed. 1983: Addison-Wesley Publishing Company.
21. Caner, M., *UFTR Conversion to Low Enriched Uranium Fuel*. 1998, University of Florida: Gainesville.
22. NRE- Department of Nuclear and Radiological Engineering, UF, *"Standard Operating Procedures of the University of Florida Training Reactor"*. 2000, University of Florida: Gainesville, Fl.
23. Welch, G.E., *Thermal Hydraulics Calculations for the UFTR*. 1992, in *Department of Nuclear and Radiological Engineering*.University of Florida: Gainesville.
24. NRC, Nuclear Regulatory Commission, .NUREG-1313, *NRC Safety Evaluation Report,* 1988,
25. Incopera, F.P. and D.P. DeWitt, *Fundamentals of Heat Transfer*. 1981, New York, USA: John Wiley & Sons Inc.
26. ANL, A.N.L., *Reactor Physics Constants*. 2nd Edition ed. ANL-5800. July, 1963.

CHAPTER 5

REACTOR COOLANT SYSTEMS

Table of Contents

INDEX OF FIGURES

5 Reactor Coolant Systems

5.1 Summary Description

This chapter describes the UFTR cooling system and its various components. The UFTR is cooled by a primary and secondary coolant system. Due to the simplicity of design and low power operation of the UFTR argonaut type reactor, this chapter is greatly simplified from what is required for a typical reactor.

In general, the primary coolant system transfers the heat from the reactor to the heat exchanger. This heat is removed by the secondary coolant systems to the storm sewer with no mixing of water between the two systems.

The primary and secondary cooling systems are installed in the equipment pit located on the north side of the reactor structure.

5.2 Primary Coolant System

The UFTR primary coolant loop and purification system are shown schematically in Figure 5.1. The UFTR has a reactor core capacity of 33 gallons and a primary coolant flow rate of approximately 40 – 45 gpm, with a maximum capacity of 65 gpm flow [1]. The primary coolant is demineralized water with a minimum allowable resistivity value of 400,000 ohm-cm. The primary coolant is stored in the coolant storage tank which has a capacity of 200 gallons of water, approximately six (6) times the capacity of the reactor. Water is made up to the primary system using demineralized city water and using a temporary connection to the primary coolant storage tank (see section 5.5). The primary pump (rated at 65 gpm), which draws its suction from the primary storage tank, circulates the water through the heat exchanger before delivering it to the fuel boxes. The water flows up and around the fuel bundles, rises to the top of the fuel boxes where it is discharged, gravity driven through the side orifices. Flow from the coolant storage tank is controlled by a ball valve in the pump discharge line which presently limits the flow rate to 40 – 45 gpm. A flow measuring instrument which is located on the exit line from the heat exchanger transmits a flow rate indication to the control console and a scram signal to the reactor protection system (RPS) This scram signal is part of the reactor safety system, preventing operation when the primary flow is insufficient for heat removal. The normal flow is 40 – 45 gpm with a reactor trip set at 30 gpm. A reactor trip will also occur in the event of loss of power to the primary coolant pumps.

Each of the six fuel boxes (2" schedule 40) discharge lines contains a type "T" (copper constantan) thermocouple which sends temperature information to a data acquisition system in the control room. The six fuel boxes flow together into a single 3" schedule 40 pipe which discharges into the primary coolant storage tank. Located in this primary coolant return line is a type "T" thermocouple (No. 8 in Figure 5.1) which monitors the combined coolant bulk temperature, and a primary coolant flow switch which monitors the flow from the core. The information from all thermocouple(No. 1 to

8) is supplied to the reactor protection system with an alarm setpoint at 150°F and a reactor trip at 155°F. This safety measure prevents reactor operation under such as restriction or reduction of primary coolant flow, reduction or restriction of secondary coolant flow, a malfunction of the heat exchanger, excessive reactor power or the malfunction of a thermocouple.

The flow switch in the coolant return line will also actuate a reactor trip signal in the event of complete loss of primary coolant flow; this serves as a backup to the low flow reactor trip in the fill line previously discussed and also monitors the integrity of the piping.

The "dump valve" (see Figure 5.1) is a solenoid operated valve which opens automatically when a scram signal (nuclear type) is generated by the control system, allowing water in the fuel boxes to drain into the coolant storage tank. Only "nuclear type" scrams open the dump valve (high power, fast period, and loss of neutron chamber HV). These scrams are now called Full Trips.

A sight glass located on the north wall of the reactor room allows visual check of the reactor core water level. An electric level switch located behind the sight glass is wired to the reactor protection system actuating a reactor trip when the water level in the core falls below preset limits (at least two inches above the fuel).

The system is further protected by a graphite rupture disk set to burst at 7 psia, two pounds above the normal operating pressure. Should a power excursion occur, this diaphragm will rupture causing the water from the core to be drained into the equipment storage pit, shutting down the reactor by loss of moderator [2].

A water level sensor, located at the primary equipment pit, alarms in the control room whenever a detectable amount of water (1 in. above pit floor level) exists in the equipment pit.

The primary reactor cooling system does not contain any valves which could be inadvertently left in the wrong position and restrict or shut off the flow of cooling water for the system without actuation of the reactor protection system [2].

5.2.1 Coolant Storage Tank

The primary coolant is stored in the primary coolant storage tank (see Figure 5.1) which has a capacity of 200 gallons of water, approximately six times the capacity of the reactor [1]. The storage tank has several features designed to optimize the overall performance of the reactor cooling system and to eliminate undesirable water surges in the core. Special storage tank features include the diffuser illustrated in Figure 5.2 and the baffle illustrated in Figure 5.3 [1].

The diffuser forces the water in the coolant storage tank to diffuse through the input line to the primary coolant pump; the diffuser eliminates the formation of vortices inside the storage tank as a result of the pump's suction. The design specifications of the diffuser are included on the drawing in Figure 5.2. The second storage tank feature is an aluminum "bucket" baffle shown in Figure 5-3. This baffle is designed to suppress the splashing of the primary water coming into the coolant storage tank and to change its direction of flow (see Figure 5.1 for location in the coolant storage tank). This device reduces entrapment of air in the coolant flowing through the system [1].

5.2.2 Heat Exchanger

The heat exchanger is a 316 stainless steel water-to-water tube and shell heat exchanger, one pass on shell side and 4 passes on primary side, designated to circulate from 150 to 250 gpm of well water through the shell side and 75 gpm of reactor coolant water through the tube side for removal of up 500 kW thermal load. The tubes are seal welded to the tubesheet to minimize leakage.

5.3 Secondary Coolant System

The secondary coolant system is capable of continuously removing 500 kW of heat from the primary system under normal operation. A schematic diagram of the secondary cooling system of the UFTR is shown in Figure 5.4, which depicts two sources of water for this secondary cooling system: the deep well used for most operations and the city water line used as a back-up system during operation above 1kW (thermal). The well water is pumped by a submersible, 10 horsepower pump. Pump on-off controls are located in the reactor console.

The deep well is 238 ft deep with a casing diameter of 3" with the static water level approximately 87 ft. below grade. The well pump has approximately 200 gpm pumping capacity for this arrangement. The well water flows through a basket strainer, with a stainless steel mesh of approximately 1/16". This water flows into the shell side of the heat exchanger and subsequently into the storm sewer as depicted in Figure 5.4.

There is a sample flow valve in the heat exchanger discharge line which continuously bleeds a small sample flow into the hold-up sample tank. A second sample valve normally kept closed is used for actual sample collection.

Secondary flow is monitored by a flow measuring instrument, located on the input line for the heat exchanger. At 140 gpm a warning signal is transmitted to the control room and 60 gpm initiates a trip at or above 1 kW after 10-sec warning. A second flowmeter located at the city water input line transmits a trip signal at 8 gpm for power levels above 1 kW without warning. A trip will also occur in the event of loss of power to the secondary pump.

Pressure of the secondary coolant system is maintained higher than the primary system to prevent contamination of secondary water, although secondary coolant is not required until 1 kW. The secondary coolant system is tested for radioactive contamination weekly according to written procedures [3].

The secondary coolant system inlet and outlet temperatures are monitored by thermocouples, with alarm and record functions in the control room. The information from thermocouple No. 9 and 10 shown in Figure 5-4 is supplied to the reactor control system with an alarm setpoint at 150°F and a reactor trip at 155°F.

A back flow preventer in the city water line prevents contamination of a potable water supply.

5.4 Primary Coolant Cleanup System

The primary purification system loop shown in Figure 5.1; it is supplied with a separate pump allowing continuous purification flow. The purification pump is interlocked with the primary coolant pump in a manner that prevents operation of the purification pump when the primary coolant pump is running. The flow of the primary coolant pump is sufficient to maintain a flow through the purification loop when it is in operation.

The purification system is arranged to provide the reactor with continuous monitoring of the resistivity of the primary water and the functioning of the amberlite-nuclear type resin (H-OH; pH control) in the purification system. The in-line, wall-mounted resistivity bridge is set up to accept two conductivity cell signals – one before the demineralizer and one after the ceramic filter. A schematic showing components of the purification is depicted in Figure 5.1.

5.5 Primary Coolant Makeup Water System

Demineralized water is used as makeup to the primary coolant system. The makeup system consists of two demineralizers in series filled with amberlite, H-OH, nuclear resin. The unit has a hose connection to the coolant storage tank, supplying primary coolant whenever necessary. A schematic of the UFTR primary water makeup system is shown in Figure 5.5. The makeup orifice for the primary system is located on the side of the coolant storage tank as illustrated in Figure 5.1.

5.6 Nitrogen-16 Control System

For power operation of 1 kW or above, the equipment pit is shielded with a concrete block. Entry into the equipment pit is permitted no sooner than 15 minutes after shutdown from power operation of 1 kW or more to allow time for N-16 decay [3].

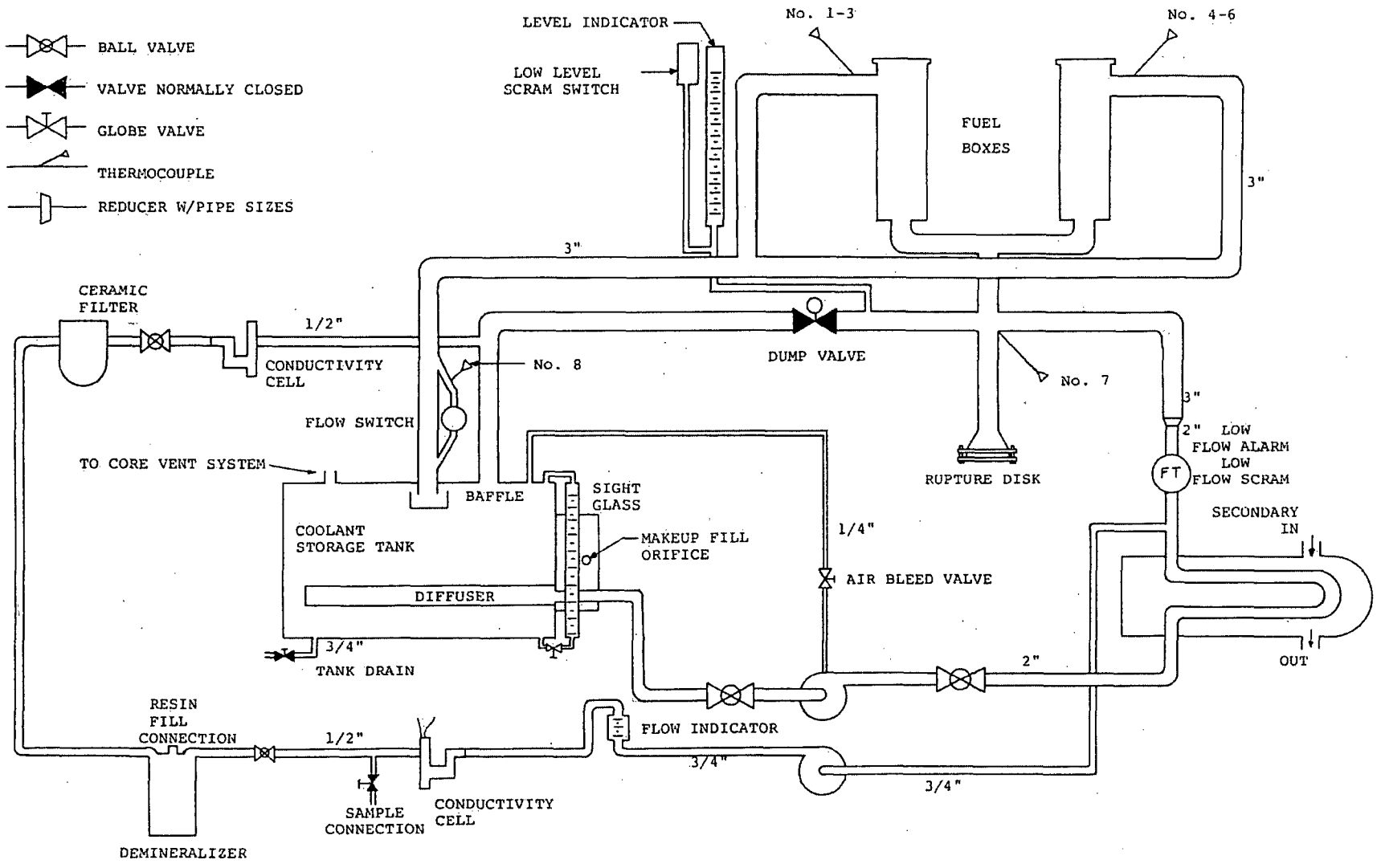

Figure 5-1 Schematic of UFTR Primary Coolant Loop and Purification System.

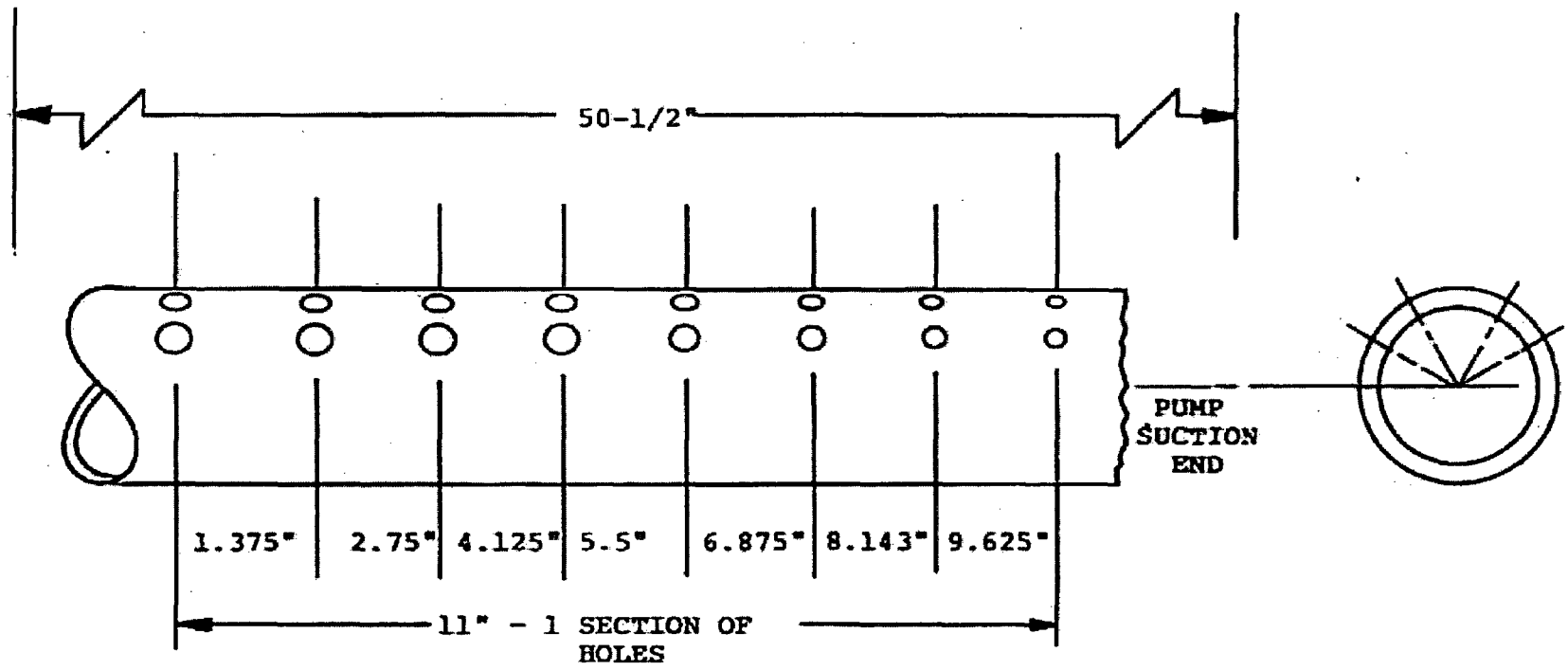

SECTION A: 8/32" diameter holes
SECTION B: 9/32" diameter holes
SECTION C: 10/32" diameter holes
SECTION D: 11/32" diameter holes

Figure 5-2 UFTR Storage Tank Diffuser Arrangement (Vortex Eliminator).

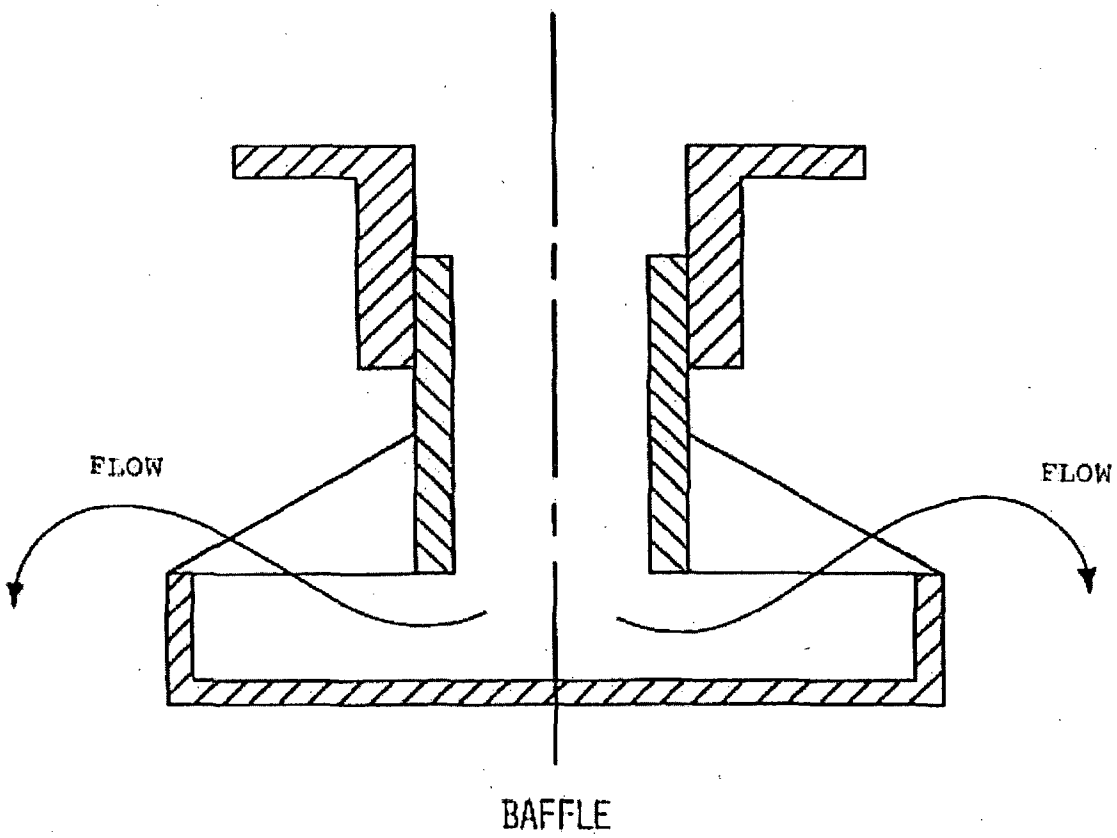

Figure 5-3 UFTR Coolant Storage Tank Aluminum Bucket Baffle.

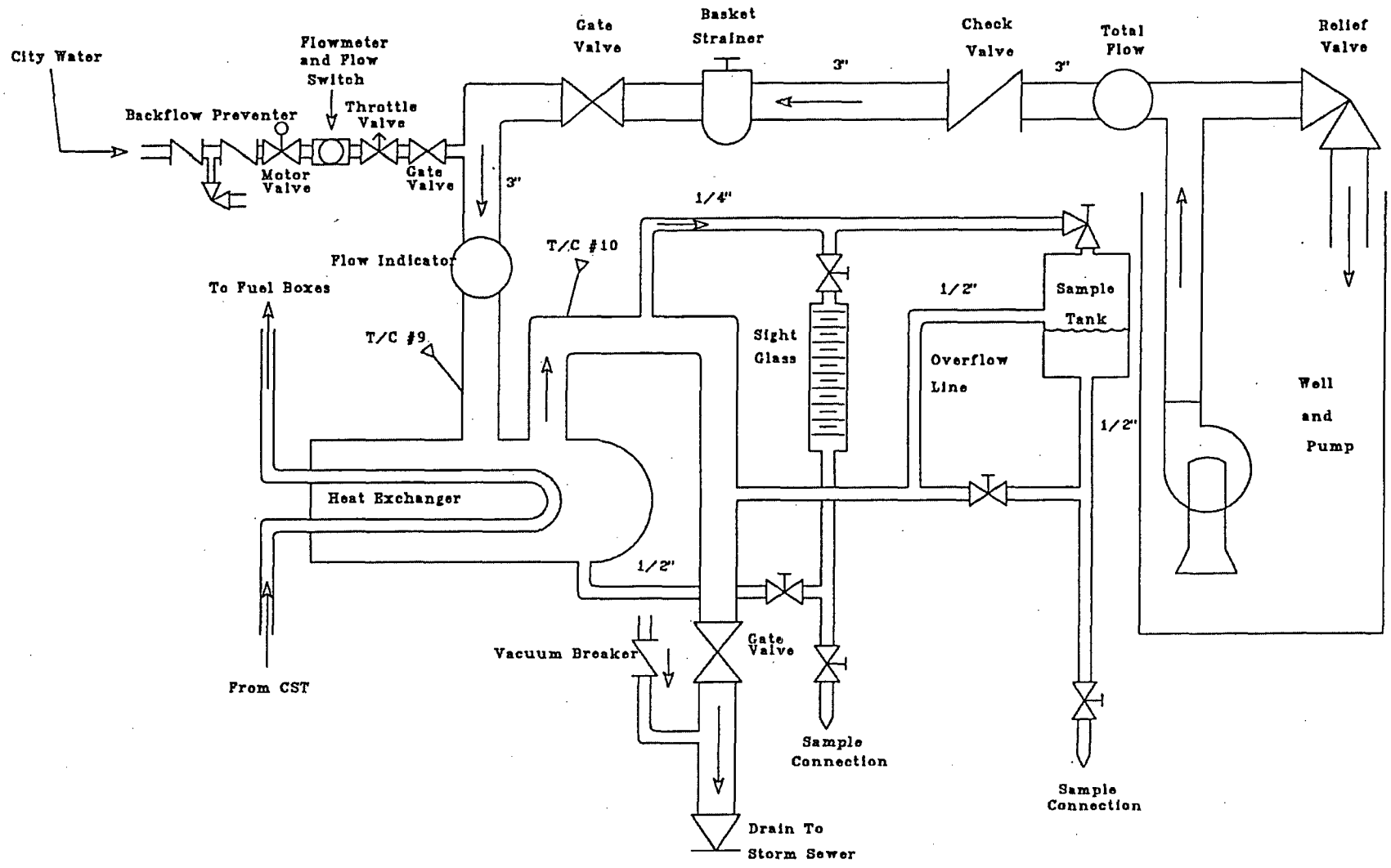

Figure 5-4 Schematic of UFTR Secondary Water Cooling System.

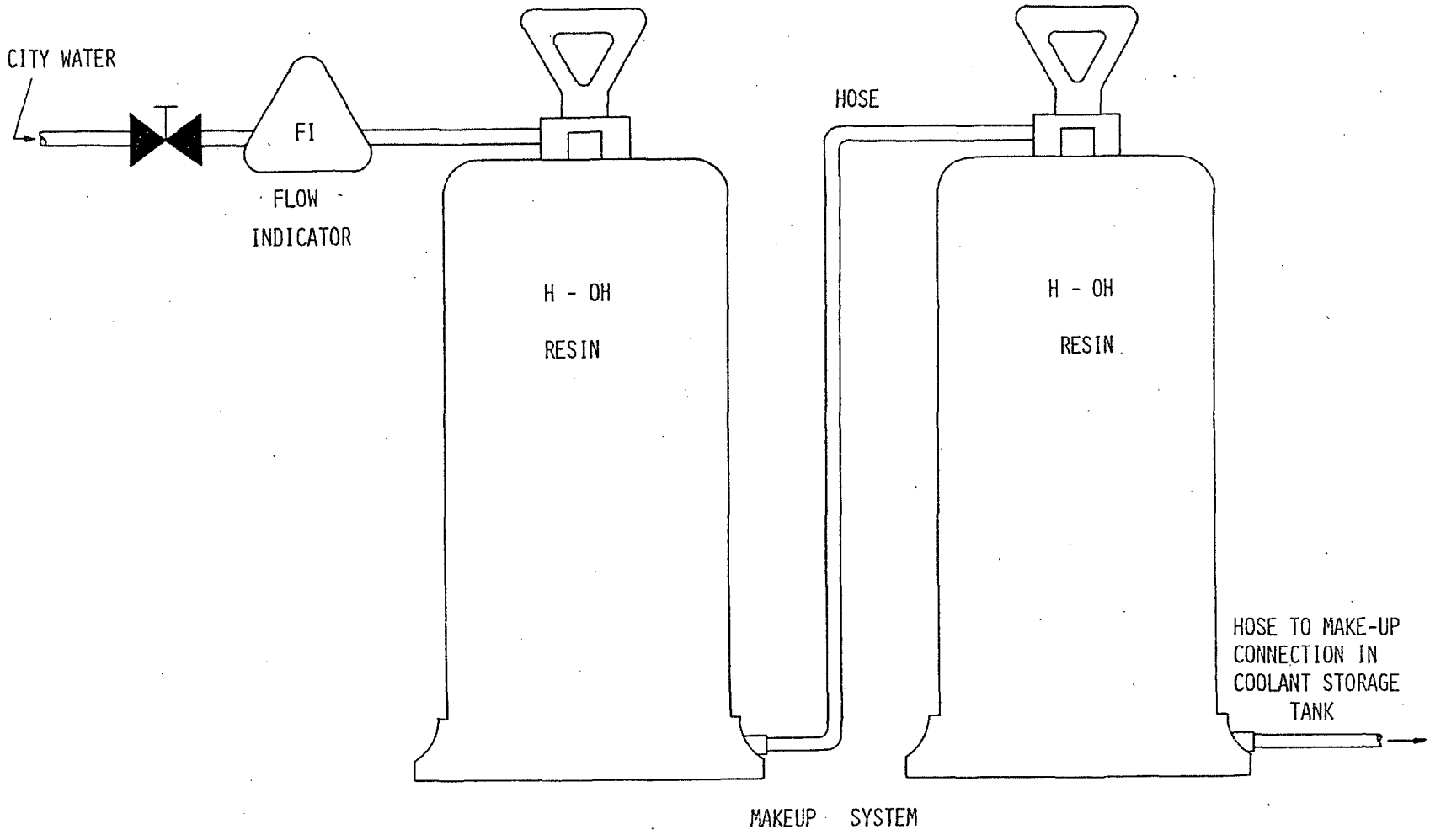

Figure 5-5 Diagram of UFTR Primary Water Makeup System

References:

1. J.A. Zuloaga, J., *"Operational Characteristics of the Modified UFTR"*, in *Department of Nuclear and Radiological Engineering*. 1975, University of Florida: Gainesville, Fl.
2. Duncan, J.M., *University of Florida Training Reactor Hazards Summary Report.*, . 1958, Florida Engineering and Industrial Experiment Station, Bulletin Series #99.
3. NRE, Department of Nuclear and Radiological Engineering, *"Standard Operating Procedures of the University of Florida Training Reactor"*, 2000, University of Florida: Gainesville, Fl.

CHAPTER 6

ENGINEERED SAFETY FEATURES

Table of Contents

6. ENGINEERED SAFETY FEATURES

The UFTR is a self-limiting research and training reactor which requires no additional engineered safeguards beyond those designed into the reactor core or incorporated into the main cooling, safety, control and radiation monitoring systems. Accident Analysis performed on Chapter 13 shows there is no credible accident that would result in hazard radiological exposures to the public, facility staff and the environment and an Engineered Safety Features is not required for UFTR operations at 100 kWth. All requisite safety features are described in appropriated places in the remainder of this Safety Analysis Report.

CHAPTER 7

INSTRUMENTATION AND CONTROL SYSTEMS

Table of Contents

Index of Tables

Index of Figures

7 INSTRUMENTATION AND CONTROLS

7.1 Summary Description

The reactor instrumentation monitors several reactor parameters and transmits the appropriate signals to the regulating system during normal operation as well as during abnormal and accident conditions to the reactor trip and safety systems. Since the UFTR is a low power, self-limiting reactor, the instrumentation and associated controls are considerably simplified when compared to instrumentation and control systems of large power reactors.

The instrumentation and control (I&C) systems of the UFTR comprise the following subsystems:

- Reactor Control System (RCS);
- Process Instrumentation;
- Reactor Protection System (RPS); and
- Radiation Safety Monitoring Systems.

The RCS, RPS and process instrumentation and their outputs are consolidated into the reactor control console, along with the devices and circuits to control the operation of the reactor. The radiation safety monitoring systems and their outputs are consolidated into the radiation console. Figure 7-1 presents the overall view of the reactor control console and radiation console.

The system instruments are hardwired analog instrument type with the exception of the temperature monitor and record system which is a digital system instrument type.

Most of the instrument outputs are shared between the reactor control system and the reactor protection system. Table 7-1 presents a list of I&C Systems and equipment classified into categories by function performed.

The reactor control system is composed of four control-blade drive systems including four control blades (three safety blades and one regulating blade), two nuclear instrumentation channels, one automatic control system, one interlock system and one monitoring system. A description of these systems is presented in Section 7.2. A functional diagram of the Reactor Control System is presented in Figure 7-2.

The reactor protection system is composed of the Control-Blade Withdrawal Inhibit System, Safety Channel 1, Safety Channel 2, and monitored parameters. The monitored parameters are both nuclear and non-nuclear or process variables. A description of these systems is presented in Section 7.2. A functional diagram of the Reactor Protection System is presented in Figure 7-3.

7.2 Identification of Safety-Related Systems

The safety-related instrumentation and controls for the UFTR include the control console, the control and safety channels, the reactor interlock system, control drive switches, and the reactor scram circuitry. Table 7-2 contains a list of abbreviations used in the UFTR instrumentation and control diagrams; it is repeated from Chapter 1 for completeness and ease of reference in this chapter. Figure 7-4 shows a block diagram of the nuclear instrumentation and scram logic of the UFTR.

7.2.1 Console

The console is a 1970's vintage (Gulf General Atomics) reactor console, with standard safety systems modules that operate on a one-out-of-one protection logic. All functions essential to the operation of the UFTR are controlled by the operator from the desk-type control console. The reactor console is conveniently located near the reactor to allow the reactor operator to monitor activities in the reactor cell during operation. All of the instrumentation contained in the console that is essential to the operation of the reactor accepts or sends signals to or from the control blade drives, the reactor interlock system, and various detectors and transducers located around the reactor core, the reactor coolant system, and auxiliary systems such as the reactor vent system and the secondary coolant system.

The reactor control panel contains the following control and indicating instrumentation:

1. A console power (POWER ON) switch.
2. A three-position OFF/OPERATE/RESET key switch.
3. A set of four control-blade switches for the three safety blades (1, 2, and 3) and the regulating blade. One set of switches for controlling the secondary system city water valve.
4. Four control blade position digital indicators.
5. A MODE SELECTOR switch (mode switch) for automatic or manual operation.
6. A REACTOR POWER range switch (range switch).
7. A dual-pen strip-chart recorder.
8. A %-DEMAND control potentiometer.
9. A manual SCRAM bar.
10. A REACTOR PERIOD meter and calibrate/test controls.
11. A set of scram (14) and blade interlock (3) annunciator lights, left panel.
12. Safety Channel Meter #1 and test controls.
13. Safety Channel Meter #2 and test controls.
14. Log Power Meter and calibrate controls.
15. Reactor cell entrance/exit door monitors.
16. Reactor equipment control switches and annunciator lights, right panel.
17. Digital clock.
18. PuBe source alarm indicator.
19. Energization switch and communication line for the pneumatic-operated rapid sample insertion system.

The functions of these control and indicating devices are summarized in the following paragraphs.

The console POWER ON switch controls A.C. power to all control and instrumentation circuits. The nuclear instrumentation channels receive power from the circuit breaker on the console rear center door.

Control blade magnet power is controlled through the three-position OPERATE key switch.

The control blade switches (UP, DOWN, and ON) are provided for the safety 1, safety 2, safety 3, and regulating blades. The positions of the control blades relative to their lower limits are indicated on individual digital blade POSITION indicators mounted on the control panel.

A two-position MODE SELECTOR switch is located in the lower left corner of the central control panel. The switch is used to select one of two modes of operation for the reactor: MANUAL or AUTOMATIC.

A REACTOR POWER range switch, with seventeen steady-state positions (0.001 watts to 100 kW), zero and calibrate, is located in the lower right corner of the horizontal portion of the control panel. It is used in conjunction with the linear amplifier. The dual-pen strip-chart recorder is centrally located in the upper center portion of the console. One pen (usually red) provides a linear indication of power as a percentage of the range switch's position and the other pen (usually green) provides a 10 decade logarithmic display of reactor power level.

THE %-DEMAND control in the upper right center section of the console is used in conjunction with the steady-state automatic control servo to maintain the desired power level during operation above 1 watt.

The SCRAM BAR provides a means of manually scramming the reactor. This is a safety-related provision required for all licensed reactors.

A LOG POWER meter ranging from 0.1 to 10^3 counts/second and a power range of 10^{-8} to 125% rated power, is located on the left side of the control panel along with the REACTOR PERIOD meter, which provides an indication of the rate of power change and ranges from periods of -30 seconds (subcritical) to infinity to +3 seconds (supercritical).

The SAFETY CHANNEL meters #1 and #2 range from 0 to 150% power and are located on the right side of the control panel. A set of 17 annunciator lights is located on the left side of the dual pen recorder. These lights annunciate all scrams and blade interlocks. Three additional indicators on the right side of the panel are used to indicate use of the two possible entrances and/or exits to the limited access area leading to the two reactor cell entrances and the equipment/personnel entrance/exit on the west side of the reactor cell as the only other entrance/exit location.

7.2.2 Nuclear Instrumentation Channels

The two channels of neutron instrumentation shown in Figure 7-4, the Nuclear Instrumentation and Scram Logic Diagram, provide the UFTR with independent, separate neutron monitors of the reactor power level. Figure 7-5 shows the operating ranges of the detectors used to monitor UFTR power levels.

7.2.2.1 Nuclear Instrumentation Channel 1

As indicated in Figure 7-6, Nuclear Instrumentation Channel 1 monitors the rate of growth of the neutron flux or power level. Reactor trips which operate on a one-out-of-one logic are provided in this channel for any of the following three occurrences:

1. A fast period (3 seconds),
2. UFTR Reactor Overpower (125% rated power/125 kW),
3. A 10% loss of high voltage to the neutron detection chambers.

These reactor trips are present to insure the safety of the UFTR facility by preventing the reactor power from exceeding design limits. An interlock in the wide range drawer assures that a reactor start-up can be made only if neutron source counts (2cps) are sufficient to allow control blade withdrawal indicating the low level neutron monitoring channel is properly functional. The main components of Nuclear Instrumentation Channel I and their functions are described in the following three subsections.

7.2.2.1.1 Log Power (Wide Range Channel)

The log power channel depicted in Figure 7-6 provides the reactor operator with a continuous display and record of neutron flux from source level to full power. The circuit consists of a B-10 proportional counter (for low levels), a fission chamber, a pre-amplifier, a log amplifier, and the log/green pen (second) channel of the two pen recorder.

7.2.2.1.2 Period Channel

For the period channel shown in Figure 7-6, the log-n amplifier produces a voltage proportional to the logarithm of neutron flux. A derivative circuit produces a voltage proportional to the inverse of the reactor period, which is then amplified and displayed on a control panel meter that ranges in seconds from -30 to + 3 sec. An adjustable bi-stable trip activates a scram, currently set at +3 seconds, as determined by the Technical Specifications.

7.2.2.1.3 Safety Channel #1

The linear channel shown in Figure 7-6 is applied as a safety channel by using the D.C. component of the signal from the wide range fission chamber. As shown in the NI Channel 1 diagram of Figure 7-6, the linear amplifier accepts the linear current signal from the pre-amplifier. The output signal is then displayed as the power level on a linear scale ranging from 1 to 150% of rated power. A reactor trip is set at 125% rated power (125 kW) resulting from

operation of a bi-stable trip. The channel also generates test signals to check the functioning of the channel.

7.2.2.2 Nuclear Instrumentation Channel 2

As shown in Figure 7-7, Nuclear Instrumentation Channel 2 is used to monitor the neutron level or power level of the UFTR and maintain a steady power level through the reactor steady-state automatic control servo system. The main components of the NI Channel 2 are described with their functions in the next two subsections.

7.2.2.2.1 Linear Power Channel

The linear power channel provides power level indication from just above source level to 100 kW. As indicated in Figure 7-7, the linear power circuit consists of a neutron-sensitive compensated ion chamber, a picoammeter with a 17 position range switch and the red pen channel of the 2 pen recorder which records the power as a percentage of where the range switch is set on the recorder. The picoammeter sends a signal, which is a function of the linear indication of reactor power, to the servo amplifier as a part of an automatic reactor control circuit. At the servo amplifier, the signal is compared with the signal from the servo flux control.

7.2.2.2.2 Safety Channel #2

As indicated in Figure 7-7, Safety Channel #2 receives a signal from an uncompensated ion chamber and consists of the ion chamber (with an independent high voltage power supply), an operational amplifier, an adjustable bi-stable trip, and a meter ranging from 1% to 150% rated power. The Safety Channel #2 system initiates a reactor trip at 125% power. Safety Channel #2 also initiates a reactor trip whenever the high voltage applied to the chamber drops by 10%. The channel also generates test signals to check the functioning of the channel.

7.2.3 Non-Nuclear Instrumentation Channels

The UFTR is supplied with several process instrumentation channels to monitor the normal operation of the various systems, to aid in maintaining a steady-state power level and to trip the system before a safety limit on any potentially unsafe situation occurs or an instrument fails. Other channels supply information needed to operate the reactor safely but do not have protective functions. These Non-Nuclear Instrumentation Channels are described in the next four subsections.

7.2.3.1 Control-Blade Drive System

The Control Blade Withdrawal Inhibit System depicted in Figure 7-8 shows the control-blade drive circuit which consists of switches and indicating devices used in operating the four control blade drives. The twelve backlit push button switches are arranged in the center of the

control panel in three rows of four vertical sets, one set for each control blade. Each set of switches contains a white DOWN switch, a red UP switch, and a yellow ON (magnet on) switch.

When the white DOWN light is illuminated, the control blade drive motor power circuit is prevented from drive action via the DOWN backlit pushbutton switch. When the red UP light is illuminated, control blades in manual control are similarly prevented from up motion. The yellow ON light is series-connected in the magnetic clutch power circuit so that if the yellow light is on, the magnetic clutch is energized; if the yellow ON light is off, the magnetic clutch is deenergized.

When any ON push button switch is depressed, magnet current is interrupted by actuation of the backlit switch, and the ON light remains extinguished for as long as the switch is depressed. If the control blade is above its down limit, the blade will gravity fall back into the core. Turning off the reactor key has the same effect. In the event of a loss of power, these blades fail safe, falling into the core by gravity.

7.2.3.2 Control-Blade Withdrawal Inhibit System

The Control Blade Withdrawal Inhibit System is depicted in Figure 7-8; this Inhibit System is part of the reactor protection system and functions to prevent blade withdrawal for the following conditions:

1. Insufficient neutron source counts to assure the proper functioning of the source level instrumentation. A minimum source count rate of 2 cps (as measured by the wide range drawer operating on extended range) is required by the UFTR Technical Specifications.
2. A reactor period of 10 seconds or faster.
3. Safety Channel 1 and 2 and wide range drawer Calibrate (or Safety 1 Trip Test) switches not in "OPERATE" or "OFF" condition. This inhibit condition assures the monitoring of neutron level increases and prevents disabling protective functions as control blades are raised.
4. Attempt to raise any two or more blades simultaneously when the reactor is in manual mode, or two or more safety blades simultaneously when the reactor is in automatic mode. This multiple blade withdrawal interlock is provided to prevent exceeding the maximum reactivity addition rate authorized by the UFTR Technical Specifications.
5. Power is raised in the automatic control mode at a period faster than 30 sec. The automatic controller action is to inhibit further regulating blade withdrawal or drive the regulating blade down until the period is greater (slower) than or equal to 30 seconds.

7.2.3.3 Automatic Control System

The UFTR Automatic Control System is used to hold reactor power at a steady power level during extended reactor operation at power and may be used to make minor power changes within the maximum range of the switch setting. While the automatic mode of reactor control is selected, the manual mode of operation is disabled; the control mode switch must be placed back

in MANUAL before the regulating blade will respond to its UP or DOWN control switches. The neutron flux controller shown in Figure 7-9 compares the linear power signal from the picoammeter with the power demand signal and moves the regulating blade to reduce any difference, thereby maintaining a steady power level.

7.2.3.4 Process Monitoring and Control Systems

7.2.3.4.1 Primary Coolant System

A primary coolant flow monitor, with a sensor located in the primary fill line, indicates flow at the control console and trips the reactor if flow is below the set point of 30 gpm (normal flow is about 40 – 45 gpm).

A coolant flow switch, located in the return line of the primary coolant system to the primary coolant storage tank, initiates a reactor trip in case of a loss of return flow. This flow switch serves as a backup for the low flow reactor trip in the fill line and actuates only after the return line has been drained of water or flow stops.

A sight glass, attached to the north wall of the reactor room, at the east side of the primary equipment pit, shows the water level in the core allowing a visual check of the primary coolant level. A float switch, located behind the sight glass, is wired to the reactor protection system. It prevents reactor operation, or activates the reactor trip system, when the water level in the core is below pre-set limits. By UFTR Technical Specifications this trip is set at 2 inches above the fuel.

Type "T" (copper-constantan) thermocouples are located at each of the six fuel box discharge lines to monitor water temperature from each fuel box to the primary coolant storage tank, and 2 thermocouples monitor the temperature of the bulk primary water going to and exiting from the core. Temperature signal information is sent to an input module which converts the signal to a linearized voltage output. These voltage outputs are sent to a data acquisition card which commands a relay board for alarming and trip conditions. The monitored temperatures are displayed on a temperature monitor virtual instrument (computer monitor) as well as on a backup (not required) paper recorder located in the reactor control room. If any monitored temperature point exceeds preset levels, an audible alarm occurs at 150°F, and the reactor trips at 155°F. Figure 7-10 presents the functional block diagram for this temperature monitor/recorder system.

A resistivity meter mounted on the east wall of the control room enables on line monitoring of resistivity of the primary coolant to assure functioning of the primary coolant purification demineralizer system. The meter annunciates if system resistivity drops below an adjustable preset value.

To monitor water intrusion from any source into the primary equipment pit, a level switch in a small sump at the lowest point of the pit floor will activate an alarm upon collecting water at 1 in. above pit floor level. The primary equipment pit sump alarm annunciates at a control unit mounted on the east wall of the control room.

7.2.3.4.2 Secondary Coolant System

The principal source of cooling water to remove reactor heat is the deep well, nominally rated at 200 gpm. A reduction of flow to 140 gpm will illuminate a yellow warning light on the right side of the control console. A reduction of flow to 60 gpm will illuminate a red scram warning light on the right side of the console, and will illuminate a red warning light on the secondary flow scram annunciator light. Approximately ten seconds later, the trip will occur. When using city water for reactor cooling, a low water flow of 8 gpm will trip the reactor. In either instance, the trip function is active only when reactor power is 1% or higher. A key operated switch inside the console rear door is used to switch secondary scram modes between well water (10 second trip delay) or city water (immediate trip) modes of operation.

7.2.3.4.3 Shield Tank System

The shield tank system has a purification loop on the west side of the shield tank with a flow indicator to monitor proper functioning of the loop as well as a sample line. A water level switch at the top of the reactor shield tank will trip the reactor when the water level drops below a preset value. This switch prevents reactor operation because of shield tank water loss due to evaporation or leakage.

7.3 Reactor Trip System

A schematic diagram of the UFTR Protection System is presented in Figure 7-11.

The UFTR facility is provided with two types of reactor trips, both initiating the gravity insertion of all control blades into the core. These reactor trips are classified into two categories:

1. Nuclear Instrumentation Induced Trips, which involve the insertion of the control blades into the core and the dumping of the primary water into the storage tank (this type of trip will dump primary water only if 2 or more control blades are not at bottom position);

2. Process Instrumentation Induced Trips, which involve only the insertion of the control blades into the reactor core (without dumping of the primary water.

7.3.1 Nuclear Instrumentation Induced Trips (Full Trips)

One of five conditions must exist for the initiation of the Reactor Trip System with dump of primary water (Nuclear-Type Trip); these five conditions include

1. Fast Period (3 seconds or less),
2. High Power, Safety Channel #1 (125%) or Safety Channel #2 (125%),
3. Reduction of high voltage to the neutron chambers of 10% or more,
4. Turning off the console magnet power switch.
5. A.C. power failure (failsafe criterion).

7.3.2 Process Instrumentation Induced Trips (Blade-DropTrips)

The conditions which must exist for the initiation of the Reactor Trip System without dump of primary water (process type trips) include

1. Loss of power to Dilution Fan.
2. Loss of power to core Vent System.
3. Loss of power to the secondary system deep well pump when operating at or above 1 kW and using this system for secondary cooling.
4. Dropping of secondary flow below 60 gpm (nominal flow 200 gpm, alarm at 140 gpm) when operating at or above 1 kW when using the well water system for secondary cooling (10 sec delay).
5. Dropping of secondary flow below 8 gpm when at or above 1 kW when using city water for secondary cooling.
6. Drop in water level of the shield tank (6" below established normal level)
7. Loss of power to primary coolant pump.
8. Reduction of primary coolant flow (normal 40 – 45 gpm, trip at 30 gpm); flow sensor is located in the fill line.
9. Loss of primary coolant flow (return line) (usually available, not required).
10. Reduction of primary coolant level (below 42.5").
11. High temperature primary coolant return from the reactor (alarm at 150°F, trip at 155°F).
12. Manual reactor trip button depressed.

A set of annunciator lights located on the left side of the control console is used to indicate all scrams and 3 interlock conditions. In case of high reactor temperature, an audible alarm is set off at 150°F and the reactor trips at 155°F. The alarm continues to sound until the indicated temperature drops below 150°F.

A red rotating beacon located in the reactor cell together with three "reactor on" lighted signs located on the outside of the east side of the Reactor building on the second floor level, on the entrance hallway leading to the control room, and on the north outside reactor building wall, are normally all energized whenever the console key switch is turned to the "ON" position.

7.4 Engineering Safety Features

As explained in Chapter 6, there are no separate Engineered Safety Features required in the UFTR aside from those built into the facility. Therefore, no instrumentation or control system relative to this system is present.

7.5 Systems Required for Safe Shutdown

The only system required for normal safe shutdown is the control blade drive system and associated instrumentation channels allowing the operator to insert the blades into the core to

shut the UFTR down and assume proper shutdown. Proper blade movement can be observed at the display panel where the four blade position indicators are located. In addition, the nuclear instrument channel read-outs provide another way for determining proper decrease in power for reactor shutdown. Nevertheless, the only system really necessary for reactor shutdown is the control blade drive system. In case of failure of this system on a loss of power, the control blade system is designed to fail safe; the blades drop by gravity into the core area to shut the reactor down. A semi-annual measurement is made of blade drop times which must be less than 1.5 second. Normal times are about 0.5 second. If the control blades do not function properly and the core overheats, the negative void and temperature coefficients will cause the core to go subcritical and shut down even without insertion of the control blades, in addition also the rupture disk breaks. Therefore, instrumentation is not an absolute necessity for shutting the UFTR down because of its inherent safety features. In addition, the reactor can be made subcritical and power reduced by the operator-initiated action of dumping the primary coolant.

7.6 Safety-Related Display Instrumentation

Readouts from all of the nuclear instrumentation and non-nuclear instrumentation channels displayed at the reactor console are described in Section 7.2.1.

The reactor vent system effluent monitor consists of a GM detector and preamplifier, which transmits a signal to the control room to monitor the gamma activity of the effluent in the downstream side of the absolute filter before dilution occurs. The stack monitoring system also consists of a log rate meter-circuit and indicator, a strip chart recorder, and an auxiliary log rate meter with an adjustable alarm setting capability for monitoring the gross activity concentration of radioactive gases in the effluent air entering the stack. If the activity reaches the preset (fixed) alarm level or if activity reaches the auxiliary alarm setpoint (operator adjusted relative to the highest power level permitted or expected during the operation), the monitor will actuate an audible alarm in the control room.

A complete area radiation monitoring system consisting of three independent area monitors with remote detector assemblies, interconnecting cables and, strip chart recorders and count rate meters is available. Each detector has an energy compensated Geiger Counter with built-in Kr-85 check source which can be operated from the control room. The signals from these detectors are sent directly to the log count rate meter and recorder, monitoring the dose rate at various locations in the reactor cell. Two levels of alarm are provided: orange warning light and red audible alarm. Both levels latch in the alarm mode to preclude false indication if a high dose rate saturates the detector. Any two of the monitors seeing a high radiation level will automatically actuate the building evacuation alarm. Actuation of the evacuation alarm automatically trips the reactor cell air handler system and both the diluting fan and the vent fan as well as tripping the reactor.

The stack monitor and 3 area monitor modules in the control room are equipped with test switches and green "NO FAIL" lights that go out if the modules do not receive signal pulses from the detectors. Floating battery packs supply power to the units in the event of electrical power loss.

The reactor cell air monitoring system is equipped with a flow indicator (LPM), a strip chart recorder and an audible and visible alarm setting. The monitor is a lead-shield, compact airborne particulate Geiger Counter detector.

The portal monitoring system outside the exit chamber leading from the reactor cell is composed of a console and portal frame. It contains channels of Geiger tube detectors providing complete head to foot coverage of beta-gamma radiation plus individual alarm lights for each channel. An audible alarm will be activated any time the preset (count rate limit) is exceeded.

7.7 All Other Instrumentation Systems Required for Safety

There are no other instrumentation systems required for the safe operation of the UFTR; all the necessary instrumentation has been covered in previous sections of this chapter.

7.8 Control Systems Not Required for Safety

There are no control systems for the UFTR which do not have safety related functions as considered in this Safety Analysis Report. Consequently, all UFTR control systems have already been described in the preceding sections. Even those controls which do not have a safety operational function do have a safety function in the sense of providing information on safe UFTR operation through read-outs supplied by the appropriate monitoring control.

Table 7-1 I&C Systems and Related Equipments

System	Subsystem	Components
Reactor Control System	Nuclear Instrumentation 1	B-10 Proportional Counter Fission Chamber
	Nuclear Instrumentation 2	Uncompensated Ion Chamber Compensated Ion Chamber
	Automatic Control System	Servoamplifier
	Control-Blade Drive System	- Digital blade position indicators - Switches.
	Process Monitoring and Control Systems	
	Reactor Control Console	
Radiation Monitoring Systems	Reactor Control Console Area Radiation Monitoring	Three independent energy compensated Geiger-Counters
	Reactor Monitoring Air System	Compact airborne particulate Geiger Counter detector. Air flow rate meter
	Stack Radiation Monitoring	GM tube
	Radiation Console	NIM BIN and Power Supply
Process Monitoring and Control Systems	Primary Coolant System Secondary Coolant System Shield Tank System	- Flow switches; - Level switches; - Termocouples - Lab View acquisition package. - Resistivity bridge
Reactor Protection System	Control-Blade Withdrawal Inhibit System.	- Bistable trip circuits
	Safety Channel 1	B-10 Proportional Counter Fission Chamber
	Safety Channel 2	Uncompensated Ion Chamber
	Process Monitoring and Control Systems	
	Reactor Control Console	

Table 7-2 Abbreviations used in UFTR Instrumentation and Controls Diagrams

AMM	AMMETER
AMP	AMPLIFIER
AUTO	AUTOMATIC
B/S	BISTABLE
CAL	CALIBRATE
CIC	COMPENSATED ION CHAMBER
COMPA	COMPARATOR
COMPUT	COMPUTER
CPS	COUNTS PER SECOND
DN	DOWN
HV	HIGH VOLTAGE
INT'LK	INTERLOCK
LIN	LINEAR
LOG	LOGARITHMIC
MAG	MAGNETIC CLUTCH
MAN	MANUAL
NI	NUCLEAR INSTRUMENTATION
P/S	POWER SUPPLY
PA	POWER AMPLIFIER
PC	PRIMARY COOLANT
PWR	POWER
REG	REGULATING BLADE (ROD)
RPI	CONTROL BLADE (ROD) POSITION INDICATION
UIC	UNCOMPENSATED ION CHAMBER
W/D	WITHDRAWAL
W/R	WIDE RANGE DRAWER (CHANNEL)

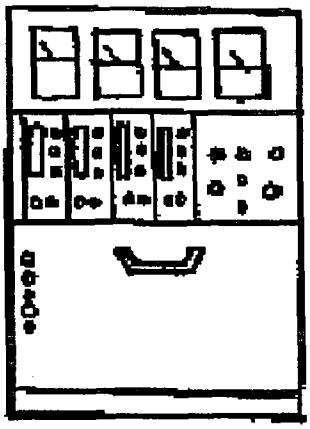

Radiation
Monitoring
Panel

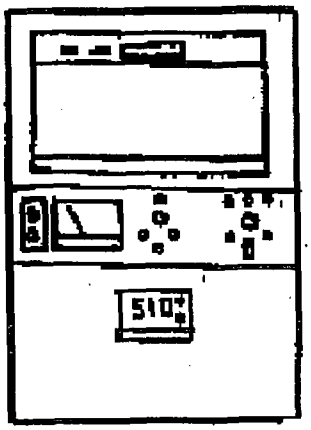

Auxiliary
Alarm
Panel

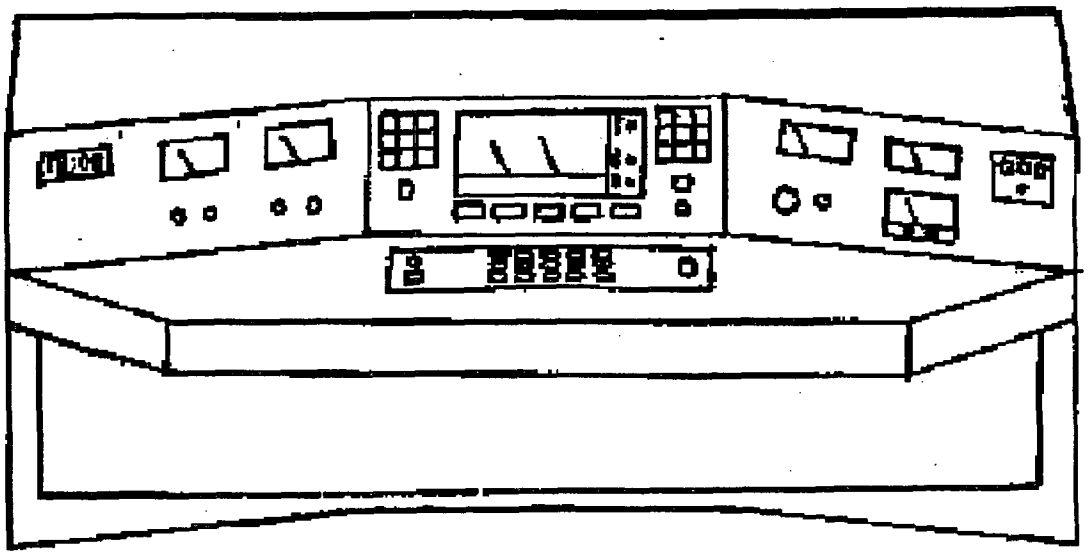

Reactor Control Console

Figure 7-1 Overall view of the reactor console and radiation console

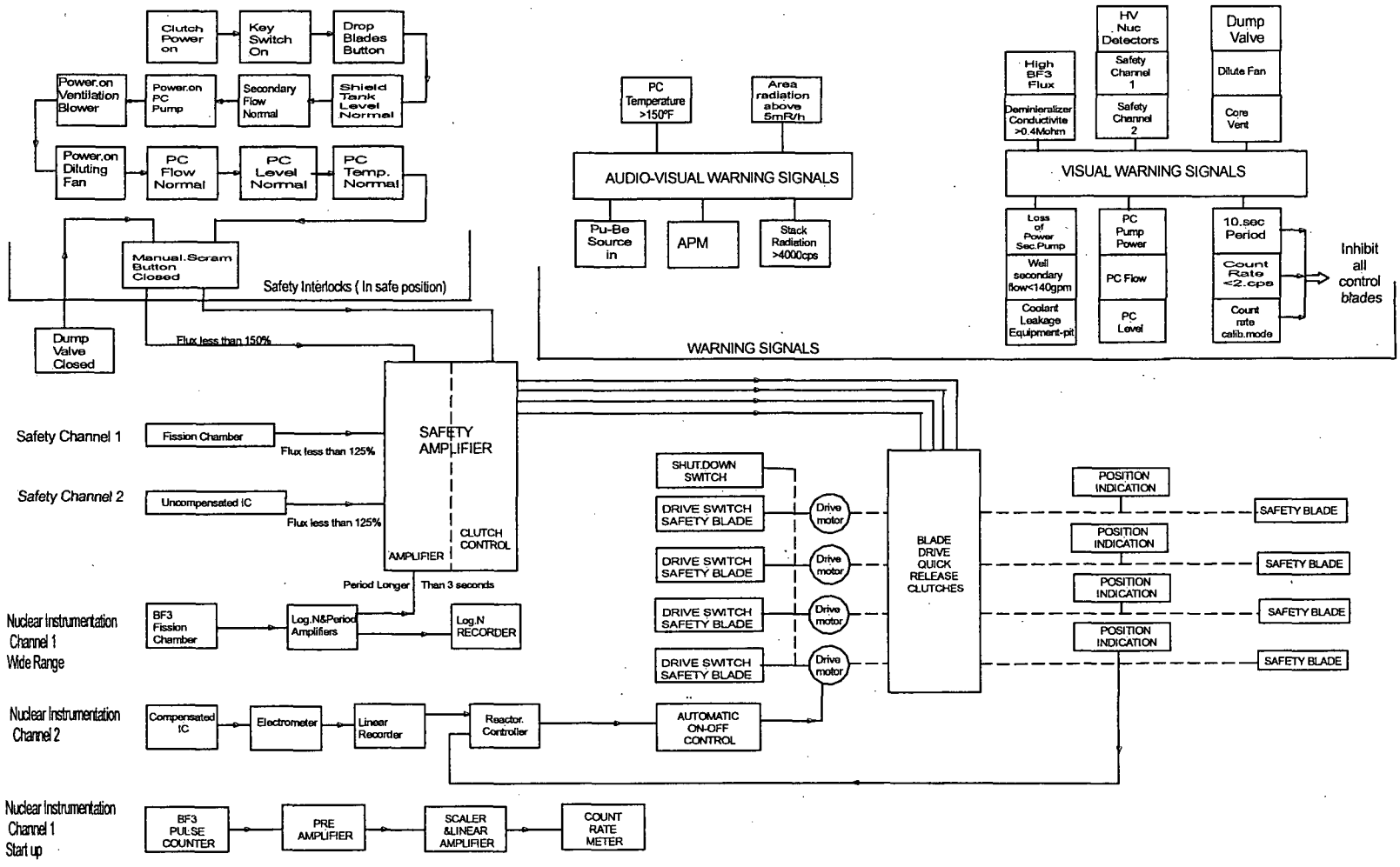

Figure 7-2 Reactor Control System Functional Diagram

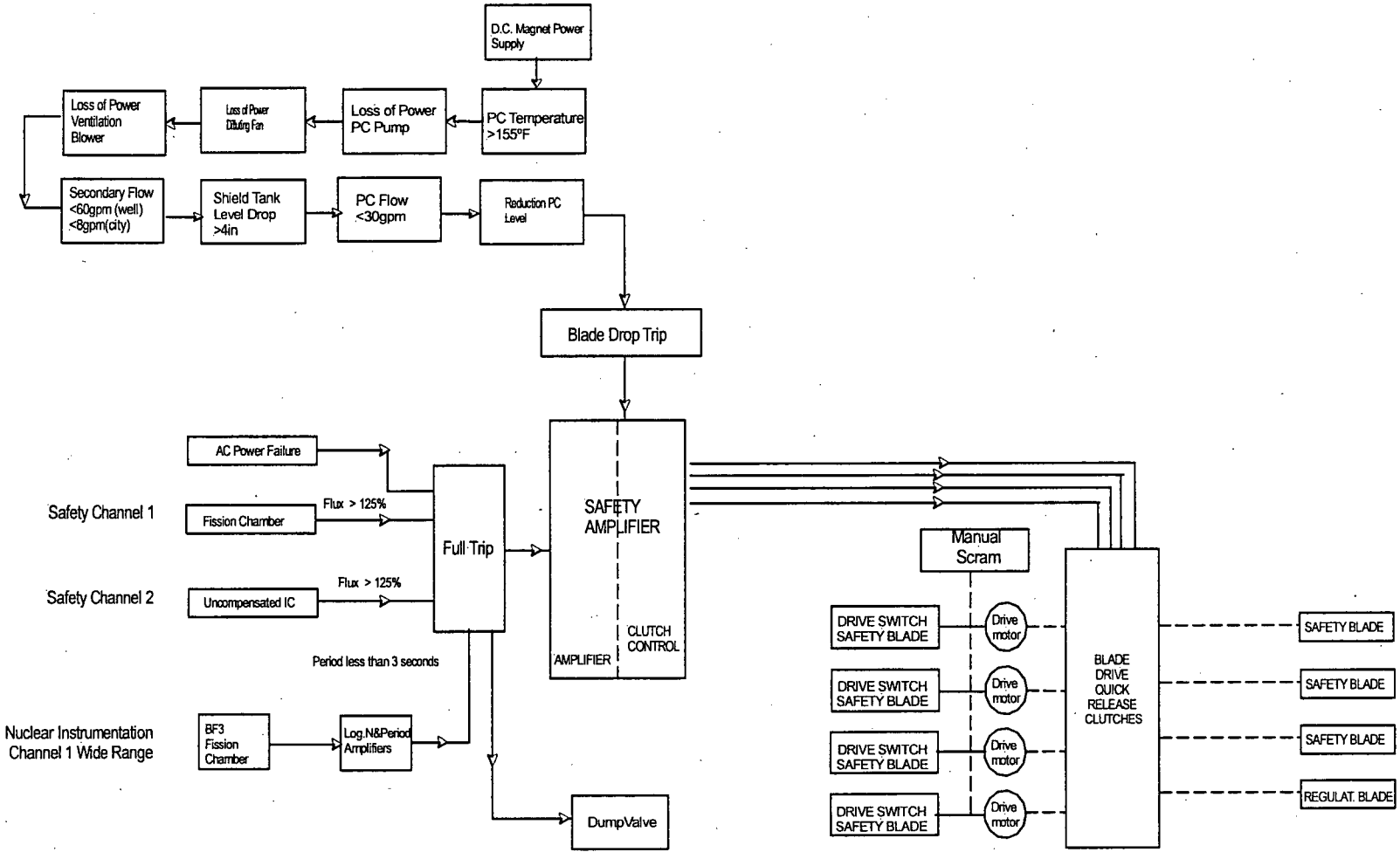

Figure 7-3 Reactor Protection System Functional Diagram

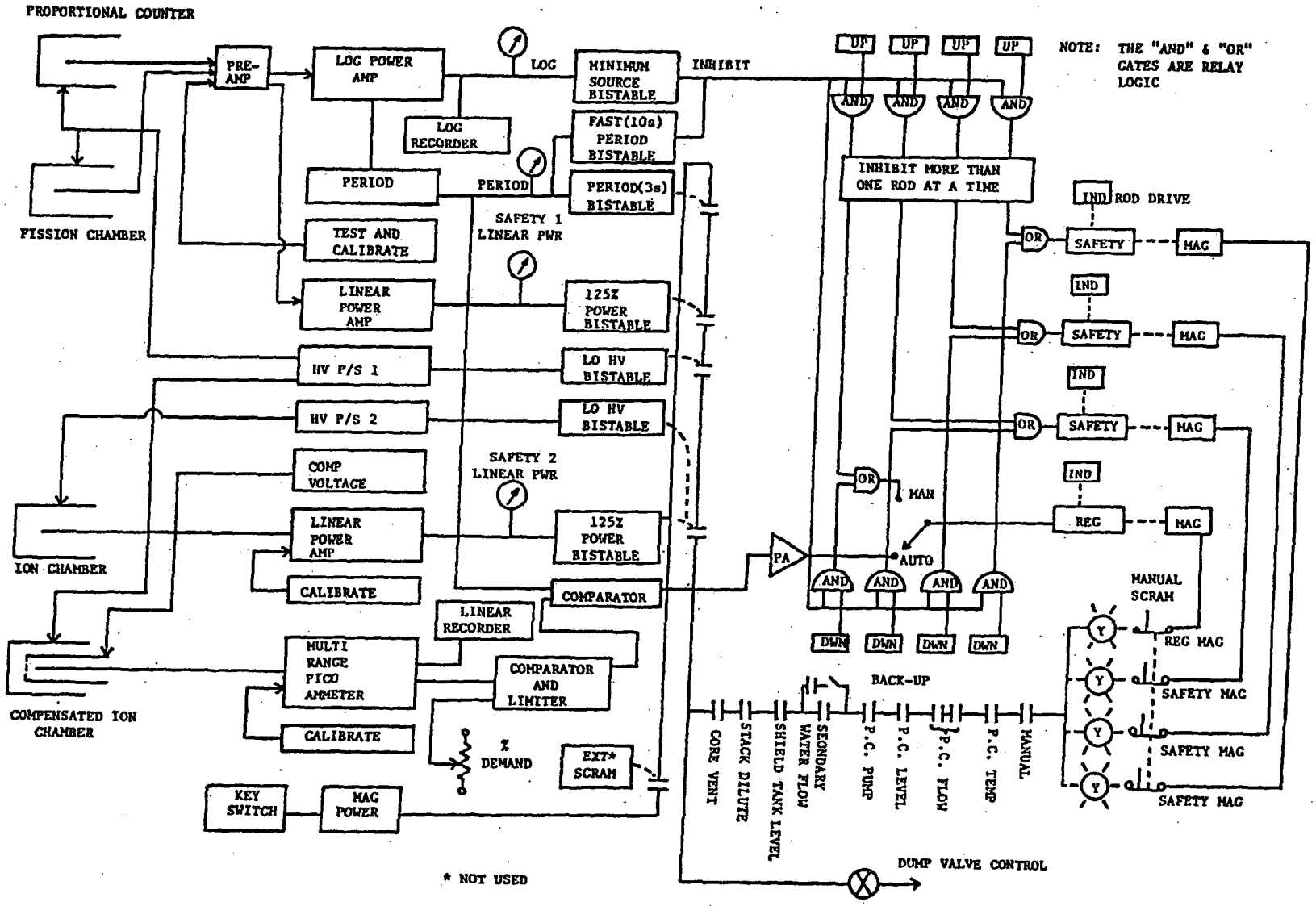

Figure 7-4 Overall UFTR instrumentation and Scram Logic Diagram

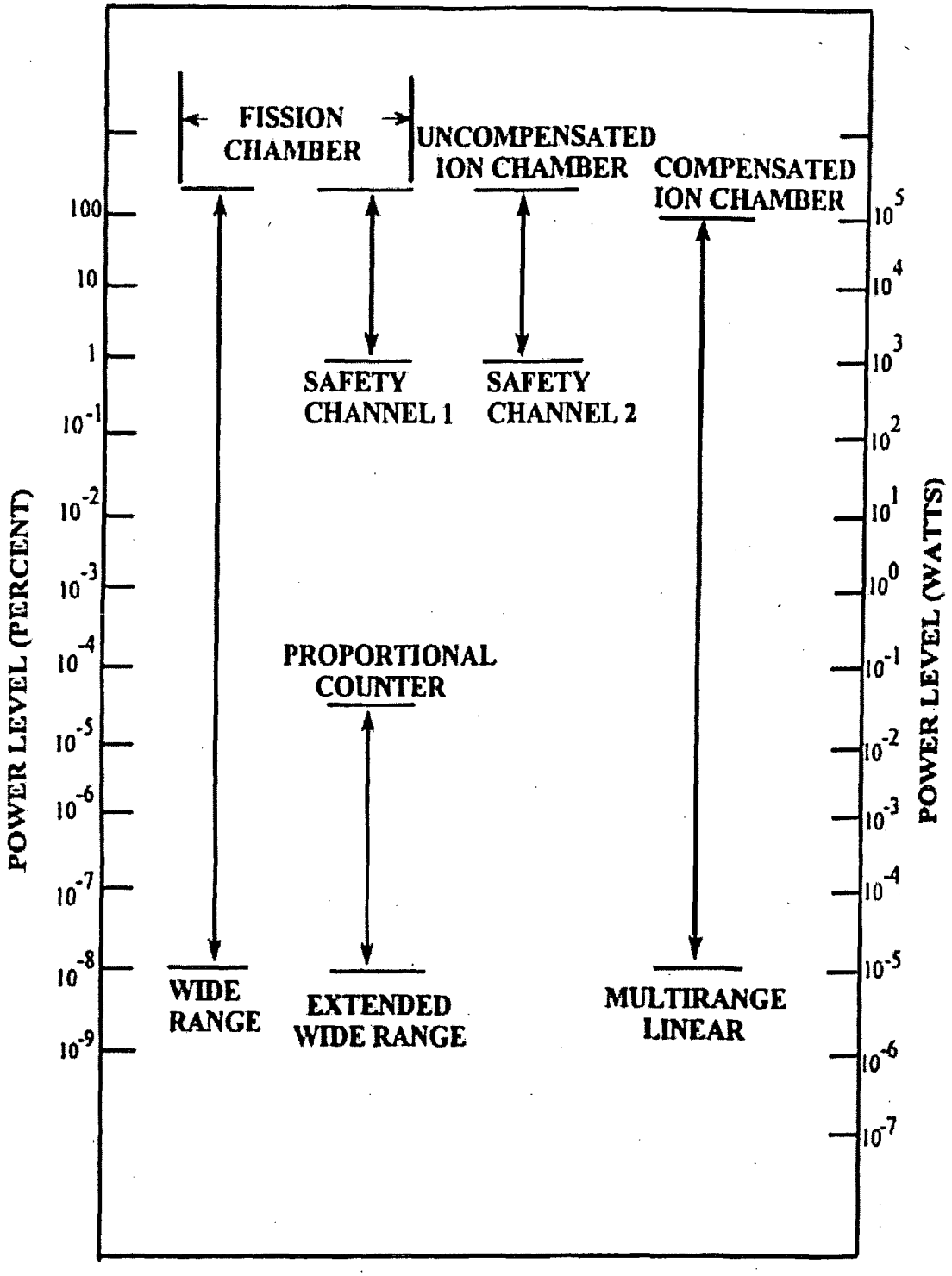

Figure 7-5 Operating Range of UFTR Neutron/Power Level Detector

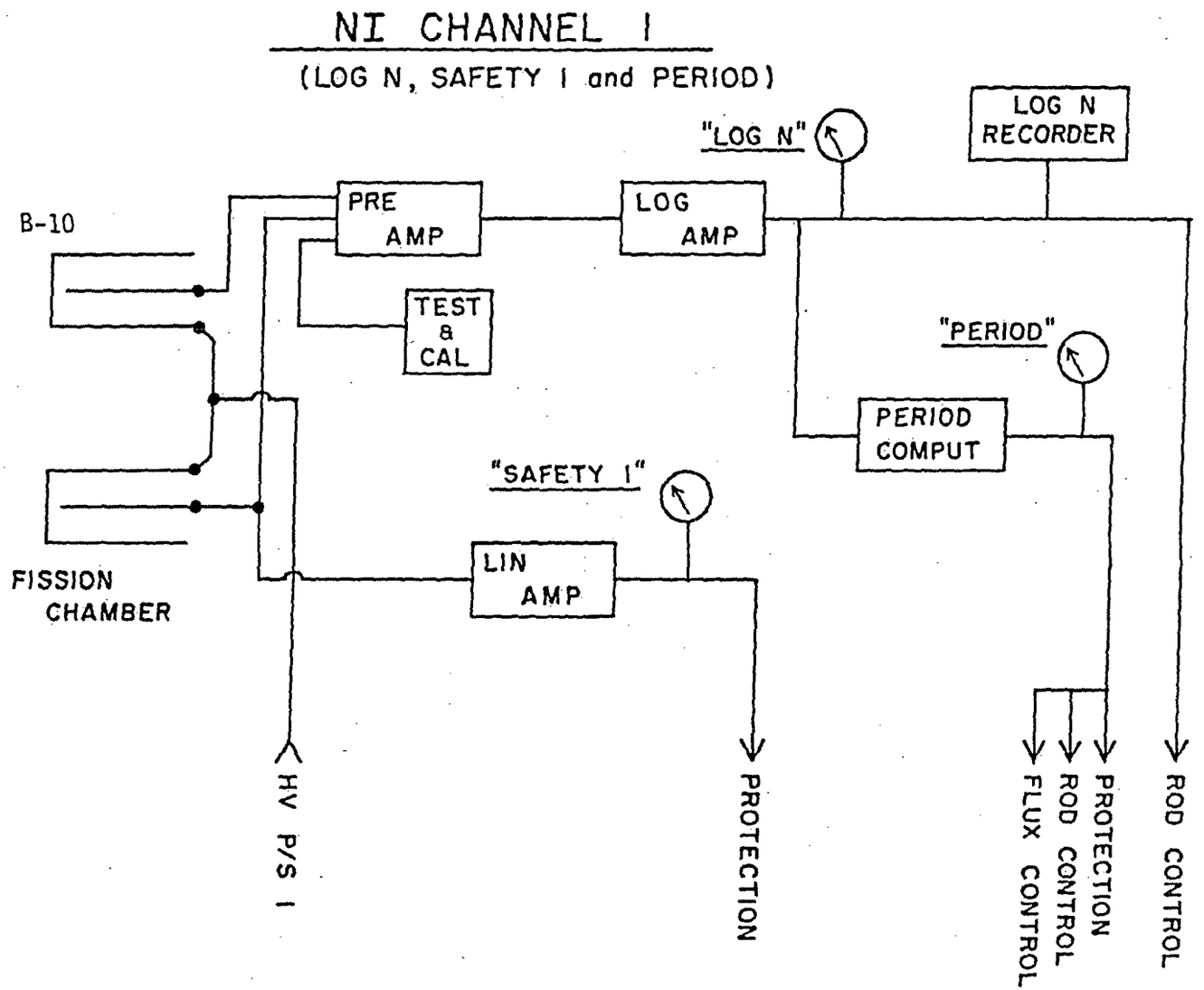

Figure 7-6 **UFTR Nuclear Instrumentation Channel 1 Schematic (Log N, Safety #1, and Period Channels)**

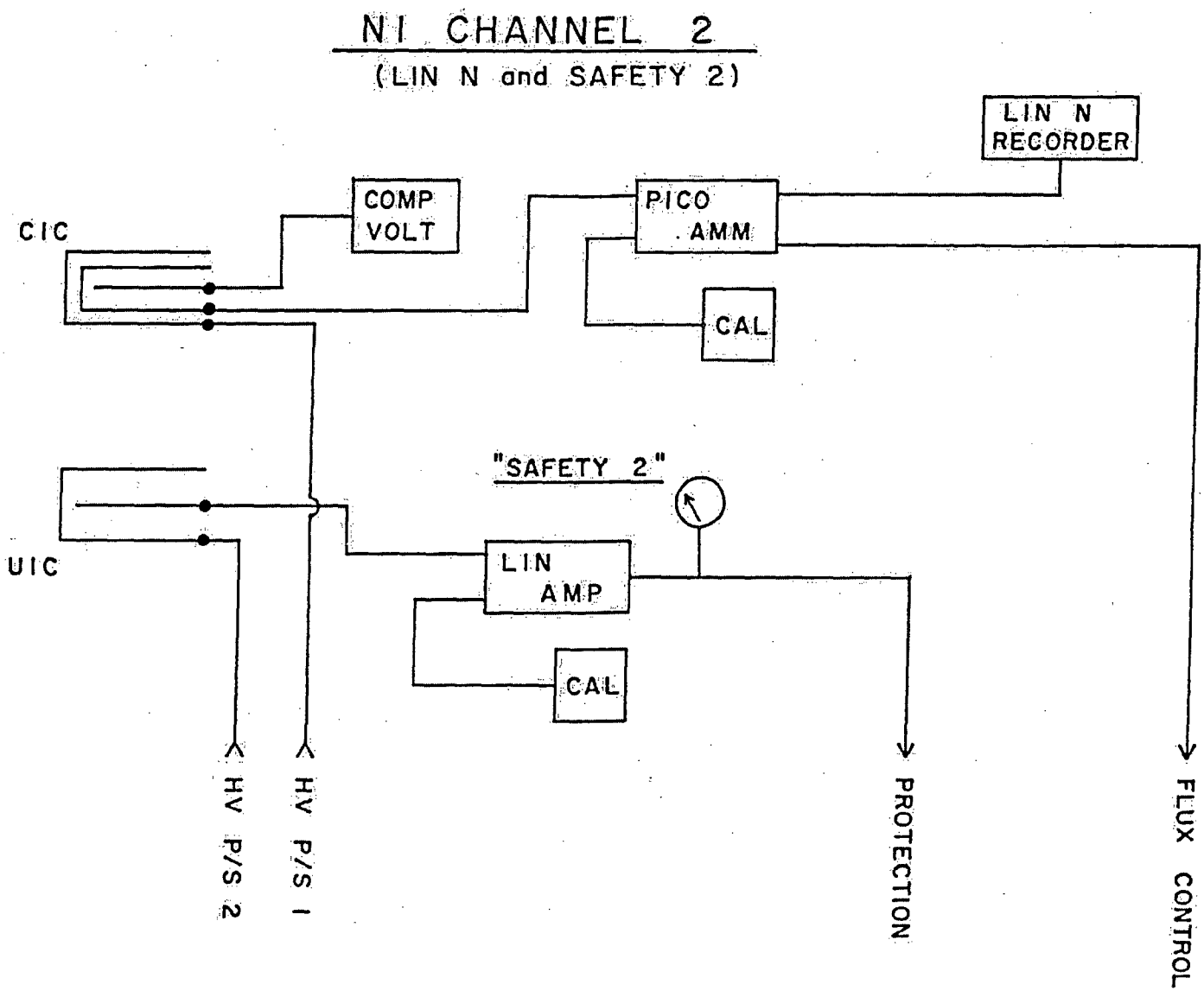

Figure 7-7 Nuclear Instrumentation Channel 2 (Linear N and Safety #2 Channels)

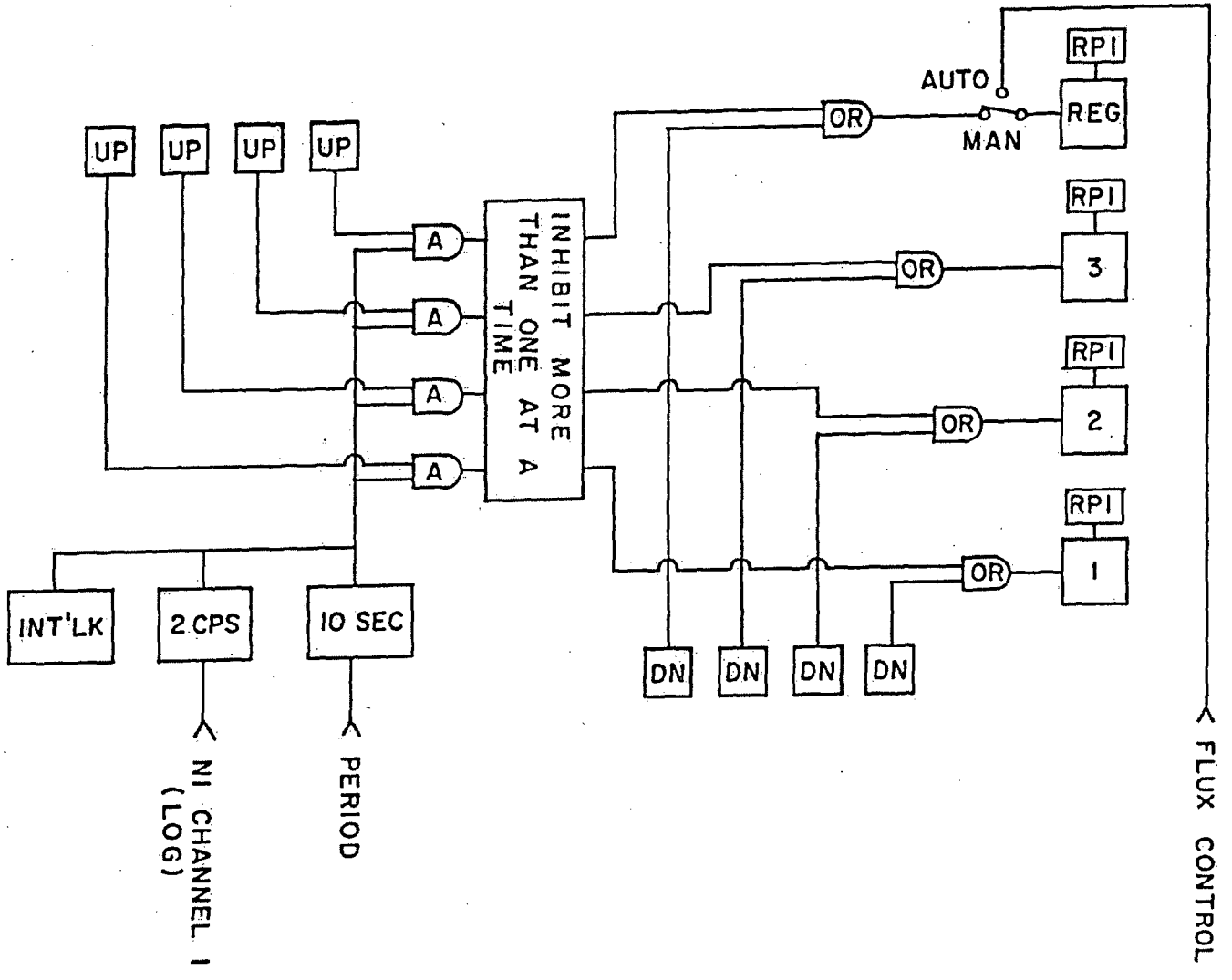

Figure 7-8 UFTR Control-Blade (Rod) Withdrawal Inhibit System

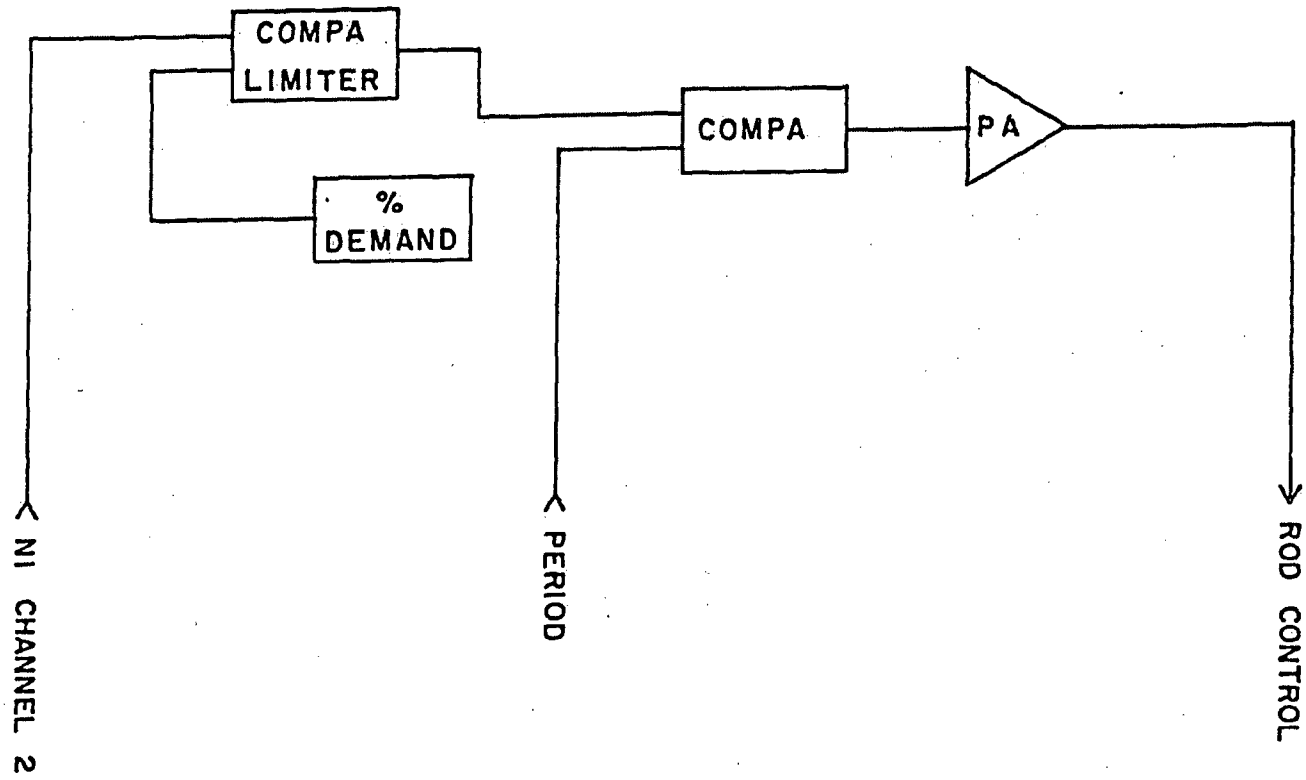

Figure 7-9 Schematic for UFTR Neutron Automatic Flux Control System

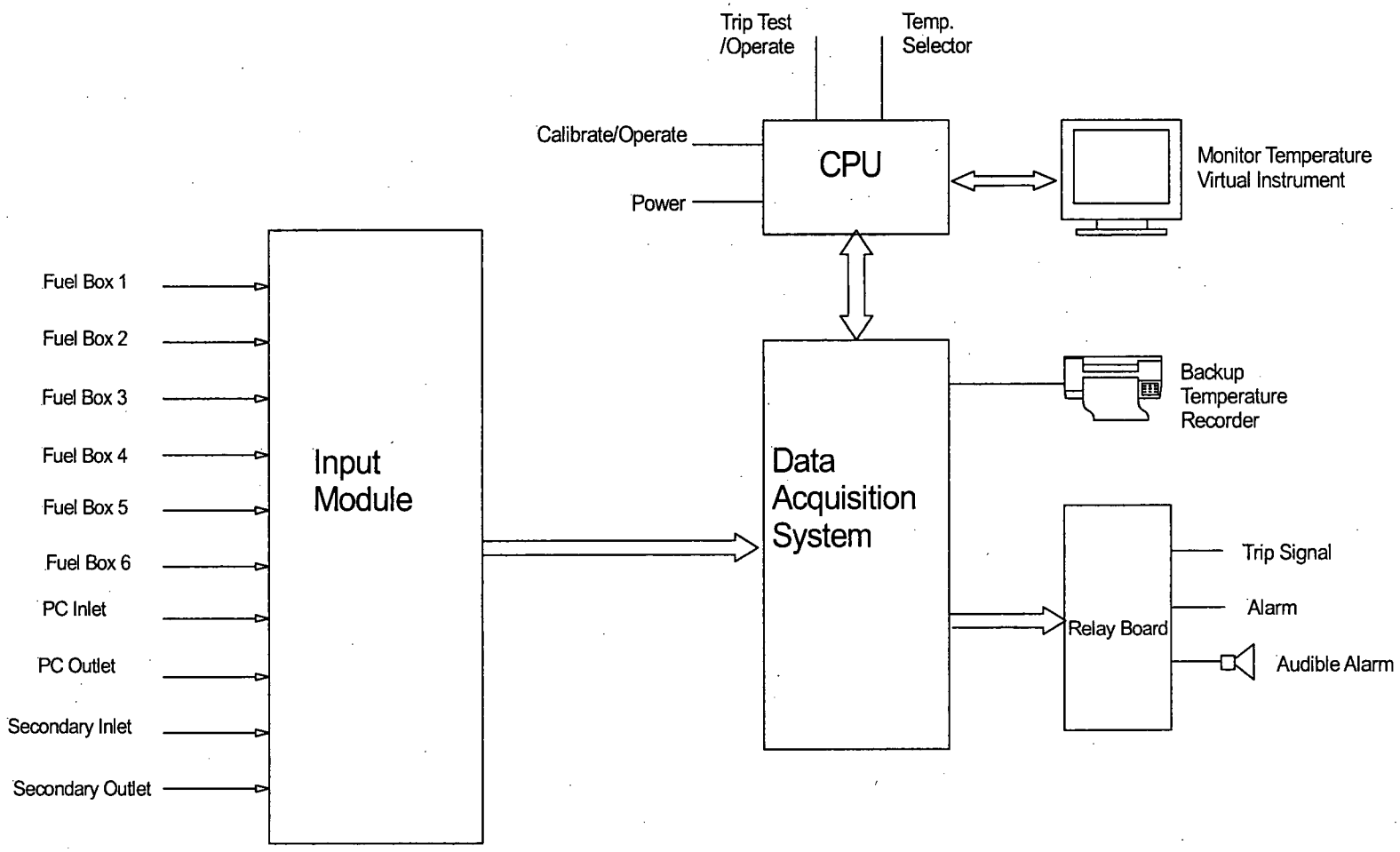

Figure 7-10 Schematic of the UFTR Temperature Monitor/ Recorder System

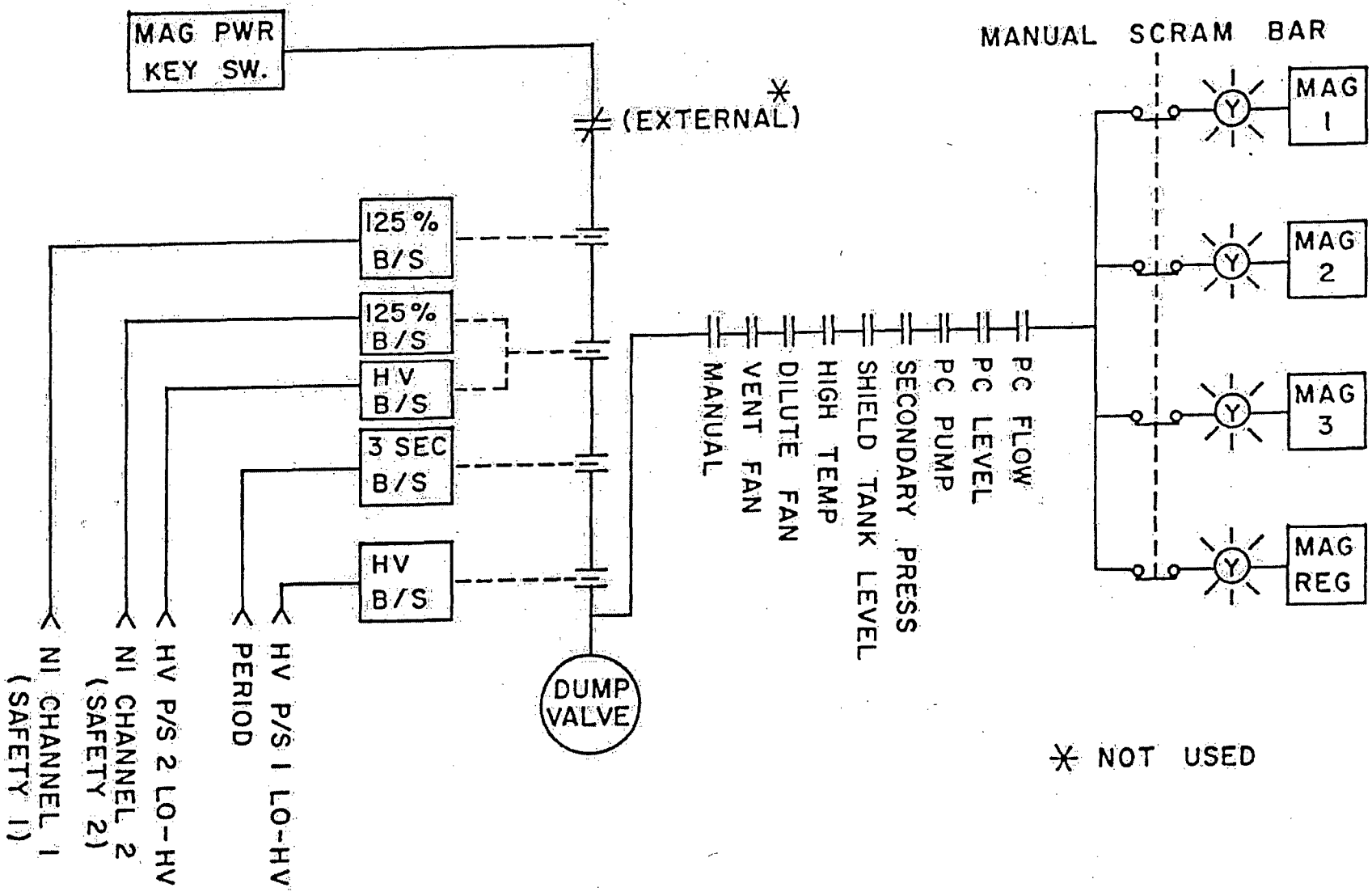

Figure 7-11 Overall Schematic Diagram of the UFTR Reactor Protection System

CHAPTER 8

ELECTRICAL POWER SYSTEMS

Table of Contents

8 ELECTRIC POWER

8.1 Introduction

The UFTR is a research reactor presently licensed to operate up to 100 kW (thermal), and it does not generate electric power. Since the UFTR does not generate electrical power, there is no impact on the power grid. The reactor is designed to shut itself down safely through operation of the reactor safety systems in case of loss of primary coolant or in case of loss of electric power. There is no credible accident that would lead the release of radioactivity in case of loss of power.

8.2 Normal Electrical Power Systems

8.2.1 AC Power Systems

During operation, the electric power requirements for the UFTR will be supplied by the regional utilities servicing the University of Florida. The reactor facility requires power of 230 V and 115 V-AC at 60 Hz. The facility requires power of 115 V-AC at 60 Hz for the reactor console and auxiliary equipment and 230 V-AC at 60 Hz for various motors.

Since the system is failsafe, no auxiliary power is needed for the operation of post-shutdown safety systems. The loss of electrical power drops out the scram relays and de-energizes the magnetic clutches to trip the reactor by dropping the control blades under gravity completely into the core. Therefore, there is no need to consider offsite sources of emergency power.

The offsite power is supplied onsite to operate the various non-nuclear reactor safety and monitoring instrumentation channels, as presented in Section 7.2.3. These channels are all dependent on the utility system A.C. power for proper operation. However, they will only be needed during operation to perform monitoring and scram functions. In a "loss of power" situation, the nuclear instrumentation channels and the failsafe nature of the control rod system provides the proper trip and safe shutdown of the reactor. In case of loss of power the reactor vent system damper is closed to minimize the leakage from the reactor cell.

Interruptions in power from the regional utilities system occur occasionally. Although such trips associated with loss of power are bothersome from a training or research standpoint, such a loss of power has no bearing upon the safe operation of the UFTR system. When power is lost, the reactor automatically trips. Since these interruptions in power are usually of short duration, there is no simple remedy for the loss of power problem. Therefore, secondary power systems are not considered in this analysis.

8.2.2 D.C. Power Systems

The radiological area radiation monitors and stack monitor are powered by 24 V DC power supplies backed up with a "floating" battery pack. In the event of loss of A.C. power, the battery packs will automatically power the monitors with the ability to maintain operation for at least 12 hours. This provides the system with an ability to monitor radiation levels in the reactor cell at all times. Emergency lighting is located throughout the reactor building and the reactor cell. There is a two lamp emergency spotlight within the reactor cell to provide necessary lighting levels in the event of a loss of electric power.

8.3 Emergency Electrical System

The UFTR is connected to an A.C. Diesel Electric Generator located in the rear of the Reactor Building. The Diesel Generator provides backup electrical power for all reactor systems, including the radiation monitoring and physical protection systems, as well as emergency lighting, except the primary coolant system dump valve. In this way all the monitoring systems are supplied with electric power the reactor cannot be operated.

No credit is taken for the back-up electrical Diesel Generator for safety analysis considerations. For additional information on the Diesel Generator refer to Chapter 9, Section 9.6.5.

CHAPTER 9

AUXILIARY SYSTEMS

Table of Contents

Table of Figures

9 AUXILIARY SYSTEMS

9.1 Heating, Ventilation, and Air Conditioning Systems

9.1.1 Control Room Area Ventilation System

The reactor cell is completely air conditioned with a recirculating type system designed to provide an atmosphere suitable for reliable operation of electronic instruments and for human comfort. The air conditioning unit is rated at 6050 c.f.m, with 129,500 Btu/hr cooling capacity. Although the system is designed to utilize up to 1500 c.f.m, of outside air, the louvers are closed to maintain the slightly negative pressure in the reactor cell resulting in approximately 200 c.f.m of outside air intake. The total conditioned air delivery is around 4600 c.f.m to the reactor room and around 1400 c.f.m, to the control room. This 6050 c.f.m of air is delivered in a closed recirculation system at 75°F dry bulk temperature-and 50% relative humidity, summer and winter. All inlet and circulated air is filtered through a 2 in. thick, dry, spun glass, cleanable-type roughing filter capable of removing particles of 5 microns or larger in size with an efficiency of 85 percent or better. The inlet air duct is provided with a motor-operated damper to close the duct whenever the unit fan is not operating.

The room exhaust air is used to ventilate the reactor structure. The vent flow from the reactor cavity is adjusted within limits conducive to minimization of releases of Argon-41 to the environment and exposures to personnel within the reactor cell. The vent flow is controlled by the operation of a small blower fan and an electrically actuated damper. This air is passed through a roughing filter and an absolute filter to an outside stack where it is diluted with a minimum of 10,000 c.f.m (usually or more) of outside air. It is then discharged through the stack extending from the roof of the building where a further 200 to 1 atmospheric dilution is effected.

9.1.2 Core Vent System

As indicated in Section 9.1.1, in order to prevent radioactive gases and particulate matter formed in the reactor from escaping by backflow into the reactor room, the air surrounding the reactor core structure is withdrawn by the core vent system and then through a rough and an absolute filter. The air is then discharged through the stack where it is diluted with at least 10,000 c.f.m, of outside air before it is released to the atmosphere.

Vacuum breaker vent lines (1" diameter) connect the tops of the fuel boxes to the coolant storage tank to provide an air-return path allowing rapid dumping of the water from the boxes. The coolant storage tank vent connection to the reactor ventilation system is shown in the diagram of Figure 9-1 which is a vertical section view of the physical arrangement of the UFTR Core Vent System. The vent lines are

positioned between the graphite blocks that surround the fuel boxes and the shield tank. A schematic flow diagram of the core cooling and vent system is presented in Figure 9-1.

On-line measurement of the vent flow rate is accomplished by a pitot tube in the outlet line of the core vent. A differential pressure, proportional to the square of the flow rate, is displayed on inclined manometers on the north wall of the reactor. The differential pressure across the rough filter is indicated by another inclined manometer, and the differential pressure across the absolute filter is indicated by a "Magnehelic" gauge. These three instruments display differential pressure head in inches of water.

Gamma activity of the gaseous effluent release is monitored by a GM detector located on the downstream side of the absolute filter after the pitot tube (see Figure 9-2) at the base of the stack before dilution occurs. An audible alarm will be actuated in the control room, in the event the vent flow activity reaches a preset level. The data from this monitor is continuously recorded. In the exhaust duct there is a motor opened, spring-closed damper valve which is interlocked with he fan to close automatically whenever the fan is not operating.

The Reactor Vent System prevents diffusion of radioactive gases or particulate matter into the reactor room during reactor operation. Loss of electrical power to either the reactor vent damper or the dilution fan motor will result in a reactor trip without dumping primary water. The vent damper is electrically interlocked with the dilution fan motor control circuit so that the damper control cannot be opened unless the dilution fan is energized. This interlock prevents the discharge of undiluted air effluent via the stack.

9.2 Handling and Storage of Reactor Fuel

9.2.1 New Fuel Storage

Unirradiated reactor fuel is normally stored in a 5-drawer, fire-resistant Diebold Safe equipped with a combination lock. Supports are provided to space the plates in such a manner that no more than 56 plates can be placed in a drawer. The bottom of each drawer is lined with cadmium. The fuel storage safe, which is locked at all times except during transfer of fuel or inventory activities is located in the reactor cell. An authorized person is present at all times when the reactor cell (which comprises the reactor room and the control room) is unlocked. The reactor cell is protected by a security system which alarms at the University of Florida campus police headquarters.

Loading and unloading of the fuel into and out of the reactor will only be performed by qualified reactor operators and staff and under the supervision of a senior reactor operator as specified in the Standard Operating Procedures series C (Fuel Handling Procedures) [1].

9.2.2 Spent Fuel Storage

Irradiated fuel is removed from the reactor into a lead transfer cask using the crane and special handling tools (Section 9.2.4); a continuous radiation survey is made while the fuel is being transferred. Irradiated fuel assemblies or plates are stored in the irradiated fuel storage pit area located in the concrete floor at the northwest corner of the reactor cell as shown in Figure 3-2. This storage area is readily accessible to the crane and contains 27 steel-lined storage pits, each of which is 4" in diameter x 4 ft. deep. These storage pits are arranged so that k_{eff} will be less than 0.8 under optimum conditions of reflection and moderator. [

]

Fuel in the core is replaced when necessary. The used irradiated fuel can be shipped to a DOE facility after sufficient cooling.

9.2.3 Bridge Crane

A 3-ton bridge crane is provided for handling shield blocks, lead casks, and other heavy equipment. The crane travel allows coverage of the entire area of the reactor cell as shown in Figure 3-2. Maximum clearance of 11 ft., 9 in. can be obtained between the top of the shielding over the core, which extends 11 ft., 10-1/2 in. above the floor, and the crane hook. The clearance is reduced to 8 ft., 9 in. over the water shield tank which extends 3 ft. above the top of the reactor. This clearance is adequate for use of the lead transfer cask to remove irradiated fuel elements from the reactor and also for the installation of any experimental equipment which might be desired over the internal thermal column. A balcony over the control room serves as a maintenance area for the crane and also as a shield to prevent damage to the control room from the crane hook or heavy objects moved with the crane (See Figure 3-3) [2].

9.2.4 Fuel Handling Systems

9.2.4.1 Equipment Description

The major pieces of equipment used in fuel handling are the following:

A) Fuel Transfer Cask
The fuel transfer cask is presented in Figure 9-3. It is used to transfer irradiated fuel elements from the reactor core to the irradiated fuel pit storage. The fuel transfer cask is both top and bottom loaded and holds one fuel bundle. The structural components are fabricated from stainless steal with lead filler. The radiation exposure rate to operating personnel is less than 10 mr/hr at the outer surface of the fuel transfer cask when loaded with an irradiated fuel bundle that

has been allowed a one week cooling time after operating at typical UFTR energy generation levels (~ 20,000 kWh for the previous year).

B) Cask Positioning Plate
The cask positioning plate, presented in Figure 9-4, is used to locate and support the fuel transfer cask above the reactor core. The plate is made of ¼"carbon steel.

C) Fuel element handling tool
Figure 9-5 presents the tool used for handling individual fuel bundles. The fuel element handling tool is inserted through the top of the cask and is latched to the top end of the fuel bundle. A limit wire is connected to the top end of the fuel handling tool to avoid removal of the irradiated fuel bundle above the top opening of the cask. The fuel bundle is lifted and the fuel cask door is inserted and latched. The fuel bundle is then lowered to the rest on the bottom drawer of the cask and the fuel element handling tool is unlatched. If the fuel bundle does not rest on the bottom drawer of the cask, the fuel element handling tools cannot be unlatched. This feature prevents inadvertent dropping of a fuel bundle.

9.2.4.2 General Precautions

Whenever fuel is loaded into or removed form the reactor, the following requirements shall be met:

1. All fuel transfer operations shall be supervised by the Reactor Manager or a designated alternate, who shall hold a Senior Reactor Operator License.
2. All the required logs, diagrams, records, and forms shall be maintained as specified in applicable fuel handling procedures [1].
3. Adherence to the UFTR Technical Specifications criticality safeguards criteria shall be enforced at all times.
4. Minimum personnel requirements shall be met at all times during fuel movement-related operations as specified in applicable fuel handling procedures [1].
5. Radiation Control Personnel shall be present to perform periodic checks to assure operability of the survey instruments, take swipe surveys, take air samples and perform radiation surveys. Records of the above checking activities shall be maintained and adherence to limits set forth in 10 CFR 20 shall be observed as set forth in applicable fuel handling procedures [1].

9.2.4.3 Fuel Loading Initial Conditions

The following initial conditions shall be observed and assured prior to the beginning of the fuel loading process:

1. The reactor will be operational with top shield blocks removed.

2. All the requirements specified in the UFTR Technical Specifications must be satisfied.
3. The pre-nuclear testing program, as defined in the fuel handling procedures [1], must be satisfactorily completed.
4. Neutron source(s) must be installed to assure a minimum count rate on the start-up channel.
5. Visual inspection and cleaning of any fuel assembly or dummy assembly must be performed before insertion into the core.
6. All operations must be previously approved by the Reactor Manager.
7. Only licensed reactor operators may insert fuel into the reactor.
8. Minimum personnel requirements must be met as specified in applicable procedures [1].

9.2.4.4 Fuel Loading to Critical and Operating Reactivity

The following conditions apply for fuel loading to critical and operating reactivity:

1. All fuel loading (including dummy assemblies) will be performed with the water out of the core and all the control blades fully inserted.
2. All counts for subcritical multiplication will be taken with the primary water up, and as specified in applicable fuel handling procedures[1].
3. At no time will the reactor core be loaded with reactivity in excess of 2.3% $\Delta k/k$.
4. Fuel loading increments must be carefully controlled. Regulations and limitations for both an unfueled and partially fueled UFTR core must be followed as outlined in applicable fuel handling procedures [1]. These regulations and limitations are designed to assure that the amount of fuel loaded in any one step will not result in exceeding the critical mass for water-up and two safety blades fully withdrawn.
5. All fuel loading shall be made from the most reactive to the least reactive location as a further safety precaution.
6. Full or partial dummy assemblies may be used during fuel loading to occupy empty positions to support assemblies.
7. Full or partial dummy assemblies must be used to fill any vacant position in the core after fuel loading is completed.

9.2.4.5 Fuel Removal and Storage

Before attempting fuel removal operations, two preliminary precautionary measures must be taken. First, precautions must be taken to limit the vertical movement of the fuel. The necessary safety line and its length will be determined using a dummy fuel element. Second, all necessary monitoring and alarm systems shall be checked for operability.

The following requirements must be met before actual operations for removal of fuel from the core are undertaken:

1. The shield tank must be prepared to receive fuel for inspection as specified in applicable fuel handling procedures [1].
2. Fuel pits must be prepared as necessary to receive the fuel.
3. All neutron and radiation monitoring systems must be in operation.
4. The Reactor Vent System must be in operation.
5. The neutron source must be installed in the reactor to assure the detection of fission events by the instrumentation.
6. Reactor shielding must be unstacked as necessary to permit core area accessibility.
7. Reactor primary coolant must be up and the console key must be removed from the console.
8. A reactor operator should be at the console.
9. Removal of shield plug and wedging pin from the fuel box shall be performed under direct supervision of the person in charge and radiation control personnel must be present for surveying at time of shield plug removal.

When removing fuel from the irradiated fuel storage pit, the shield tank shall be prepared if inspection of fuel is required. In addition, other fuel storage pits shall be prepared if change of fuel locations within the fuel pits is the only required operation.

Detailed descriptions of the procedural steps to be followed during transfer of fuel to and from the fuel transfer cask and for fuel inspection are contained in applicable procedures for the UFTR facility [1].

9.3 Fire Protection Systems and Programs

Since none of the materials of construction of the reactor are inflammable, and since the reactor building is fireproof construction and will not be used for storage of quantities of inflammable materials, a fire of any consequence is considered very unlikely.

Conventional fire equipment is located in the reactor cell and throughout the reactor building. Two CO_2 extinguishers are available in the reactor room itself, and one more is located in the control room at the control console. A fire hose and fire extinguisher are also located outside the control, room in the ground floor foyer area referred to as the Limited Access Area in Chapter 3 of this report.

An automatic fire alarm system monitors the reactor cell and the remainder of the reactor building continuously. The system used is a four-zone system with local monitoring and a control station. The system is completely supervised with emergency battery back-up. Minimum equipment installed includes:

1. Three (3) Ionization Detectors.
2. Two (2) Thermal (Heat) Detectors.
3. Seven (7) Pull Stations.
4. Six (6) Horns.

Remote supervision is performed by University Personnel. Operation of this system will turn on the emergency light in the reactor room (for illumination).

Guidance and outlines of required as well as recommended actions to be taken if a fire occurs in the UFTR reactor cell or control room areas are specified in facility emergency procedures [1].

9.4 Communications Systems

A full-service telephone is installed within easy reach of the reactor operator at the console. This provides direct communication within the building, on and off-campus including: Facility Director, Reactor Manager, Radiation Control Office, Health Physics Office, University of Florida Police Department, Gainesville Fire Department and Senior Reactor Operator on Call.

In case of a power failure, the telephone will be available for communication within the building as well as on and off-campus.

9.5 Water Systems

9.5.1 Shield Water Tank

The shield water tank is a 5 ft. x5 ft. x 14 ft. high water tank placed against the west face of the reactor, opposite the thermal column (see Figure 1-1). Shield water tank components include:

1. Water level indicator,
2. Pump,
3. Ceramic filter,
4. Flow water indicator,
5. Demineralizer,
6. Sampling valve.

This test tank is primarily used for experimental purposes. If necessary, the tank can be drained and lifted out of the way with the bridge crane. All water drained from the tank will go to the waste water holdup tank where it will be monitored. It will then be released to the University of Florida Sanitary Sewage System if, as expected, the activity level is below those established by the Radiation Control Office. If activity levels exceed those established by the Radiation Control Office, then the water will be held up in the waste water holdup tank until activity levels have decayed sufficiently to allow release.

9.5.2 Potable and Sanitary Water System

The UFTR Building does have potable and sanitary water system connections. Tap water and a utility sink are located in the northwest comer of the reactor cell. A "back flow preventer," as required by the National Plumbing Code, is installed in the city water line ahead of any industrial type use of this water.

9.6 Other Auxiliary Systems

9.6.1 Compressed Air System

An air compressor and associated system components is located in the Air Conditioner Equipment Room on the north side of the Reactor Building. This system supplies compressed air for the laboratories in the Reactor Building, and for operation of the thermostats and valves of the air conditioning system.

9.6.2 Process Sampling System

The process sampling system for the UFTR consists of several sample valves found in the primary and secondary coolant loops, and in the purification system as labeled in Figure 9-6 showing the Primary Coolant Loop and Purification System and in Figure 9-7 showing the Secondary Loop Cooling System. Process sampling is done routinely on a weekly basis as part of the Weekly Pre-operational Check ([1].

For the primary system, water samples are taken from the sample valve located in the equipment pit. Two samples are required. One sample is used in the reactor cell to check the water resistivity; the second sample is taken to Radiation Control for analysis. For the secondary system, two water samples are taken to check for primary to secondary coolant leaks. There is one sample flow valve in the heat exchanger discharge line which continuously bleeds a small sample flow into the hold-up sample tank. A second sample valve, which is normally closed, is used for collecting a sample directly from the heat exchanger, as shown in Figure 9-7. Water samples to check the shield water resistivity are taken from the sample valve located in the shield tank system. All samples are taken in a routine basis.

9.6.3 Equipment and Floor Drainage System

The reactor building floor drainage system is designed so that all liquid effluents will go directly to the hold-up tank. There are no drains leading directly to the hold-up tank; therefore, all the water must be pumped to the waste water hold up tank.

9.6.4 Lighting System

The reactor building is provided with overhead fluorescent lighting. Additional supplementary lighting is possible via 115 V wall outlets.

In case of a power failure, emergency lighting is provided automatically throughout the building by the emergency diesel generator located outside the reactor building.

9.6.5 Diesel Generator Fuel Oil Storage and Transfer System

The diesel generator is a Turbo-Charge D-6 Caterpillar or equivalent type generator and is available for emergency conditions in case of a power failure. The system is designed to come on line automatically within 10 seconds after a power failure, operating 10 to 11 minutes after power recovery, as a back-up power supply in case of repeated, failure within this short period of time. The automatic starting system provides for three start-up events within a 90 second period, after which it goes into a manual stand-by condition with the option of a manual start-up or a reset mechanism for start-up.

Fuel oil storage provisions consist of an underground tank with a capacity of approximately 2000 gallons. Fuel oil transfer is accomplished by an electrical motor system with a manually operated hand-pump as a secondary backup. Cooling of the system is provided by a radiator assembly. Inspection of the Diesel Generator System is carried out on a routine basis by the Physical Plant Division of the University of Florida.

[

]

Figure 9-1 Vertical View Schematic Flow Diagram Showing Physical Arrangement of UFTR Core Vent System

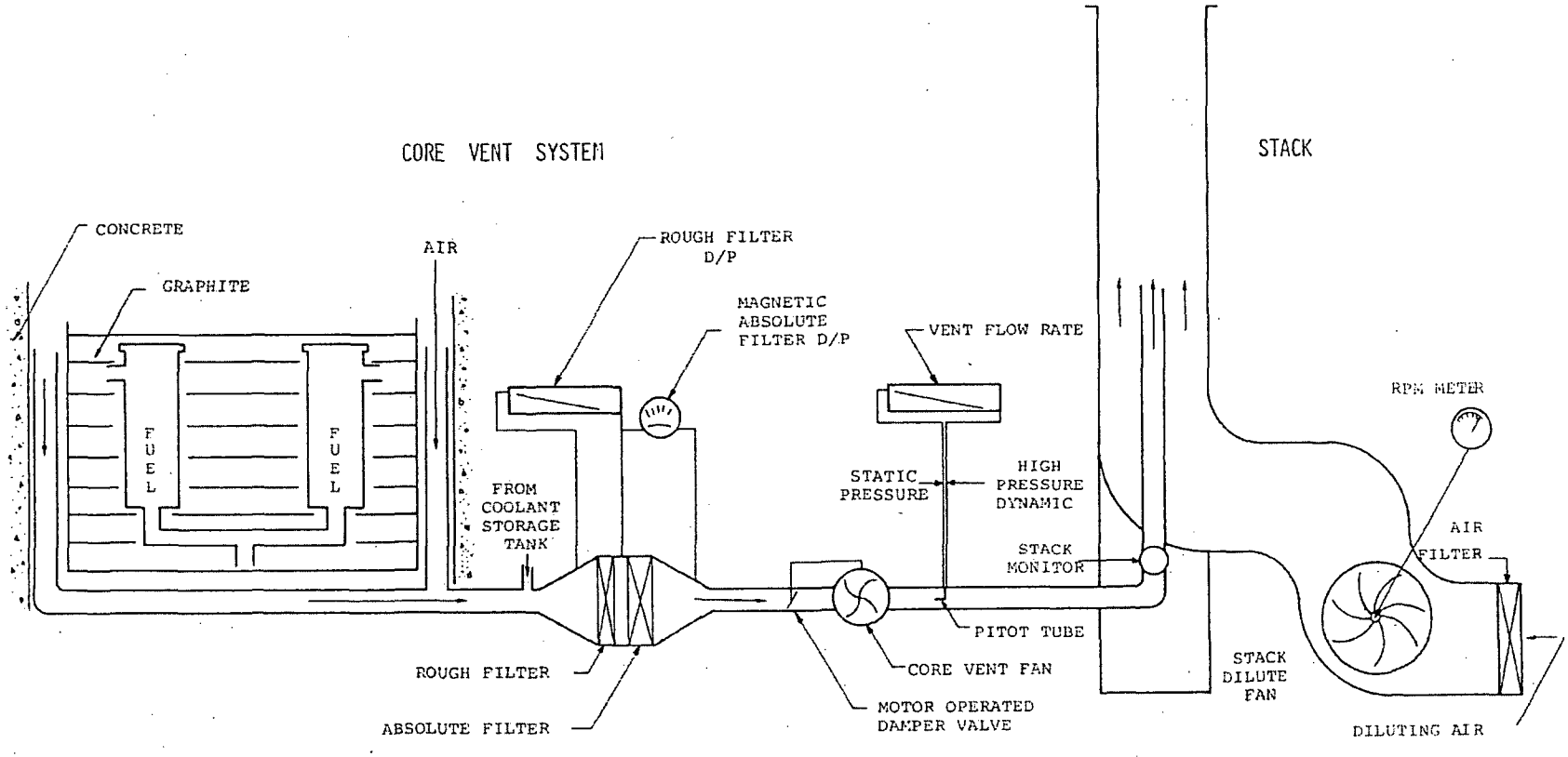

Figure 9-2 Side-View Schematic Diagram of UFTR Core Vent System

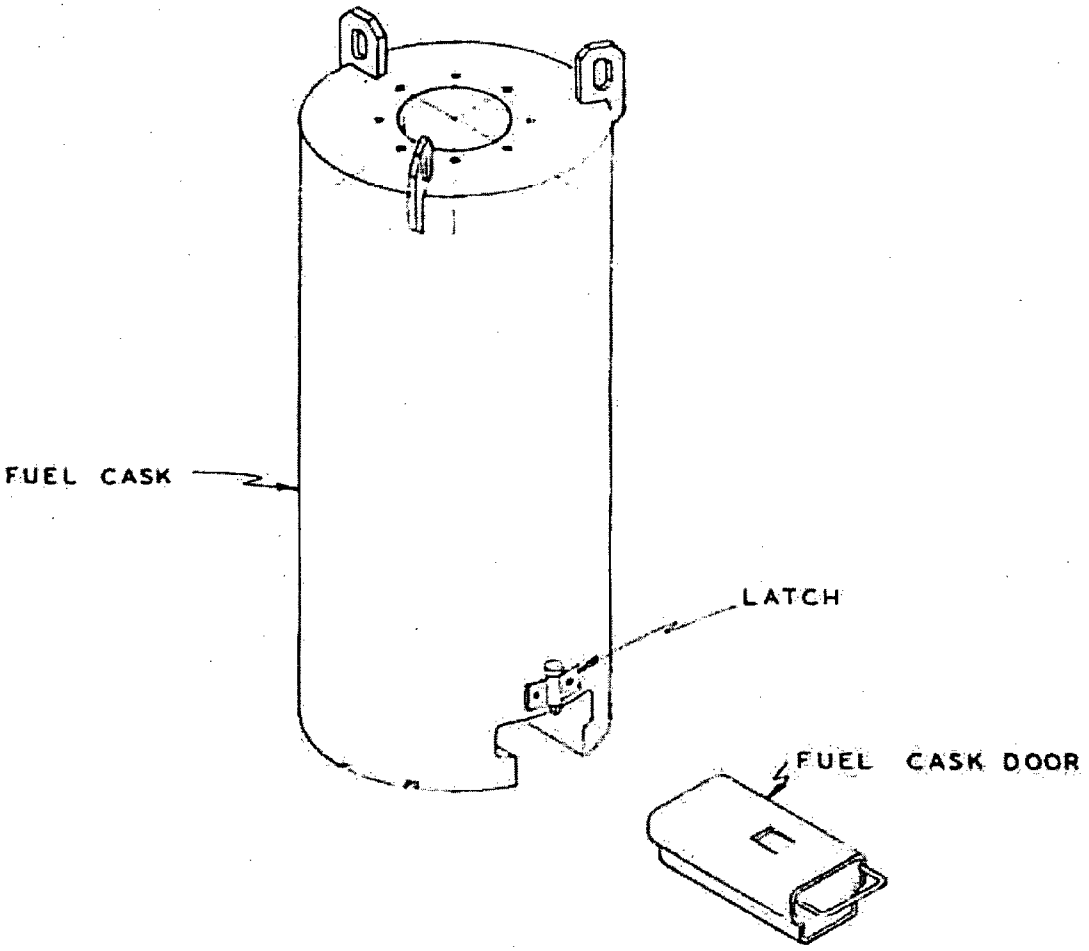

Figure 9-3 **Fuel Transfer Cask**

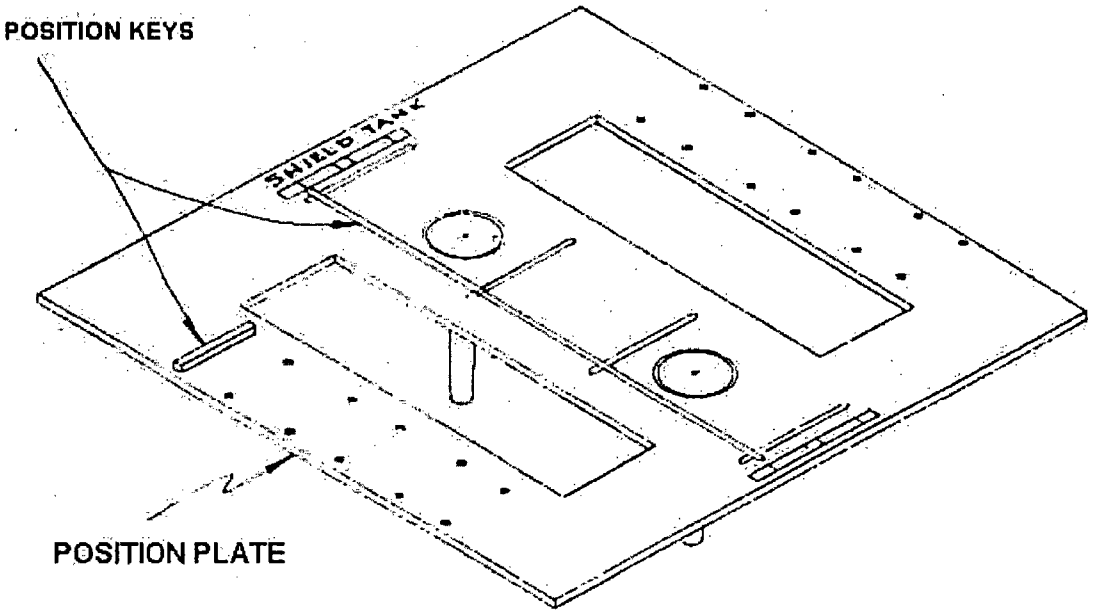

Figure 9-4 Cask Positioning Plate

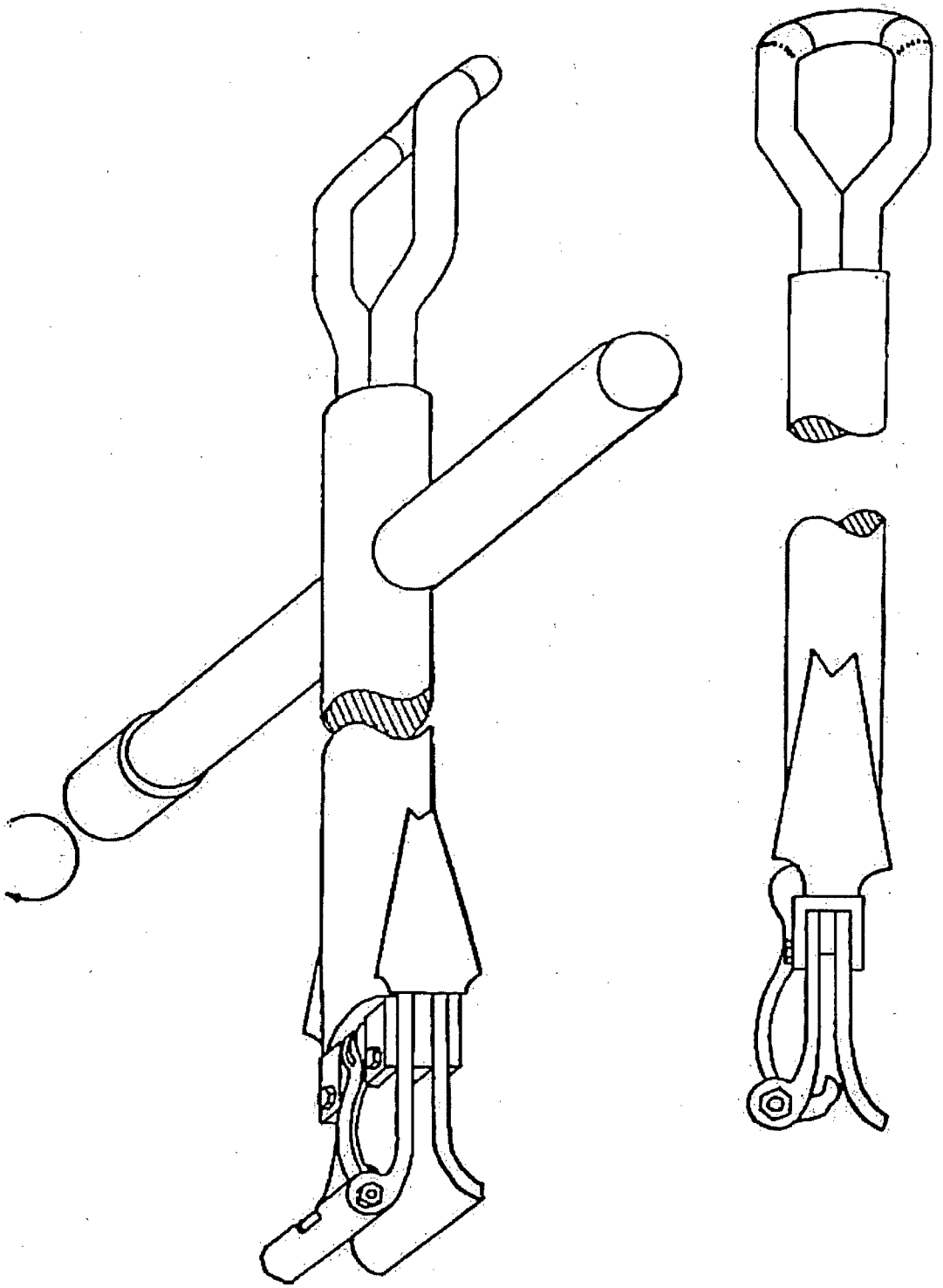

Figure 9-5 Fuel Handling Tool.

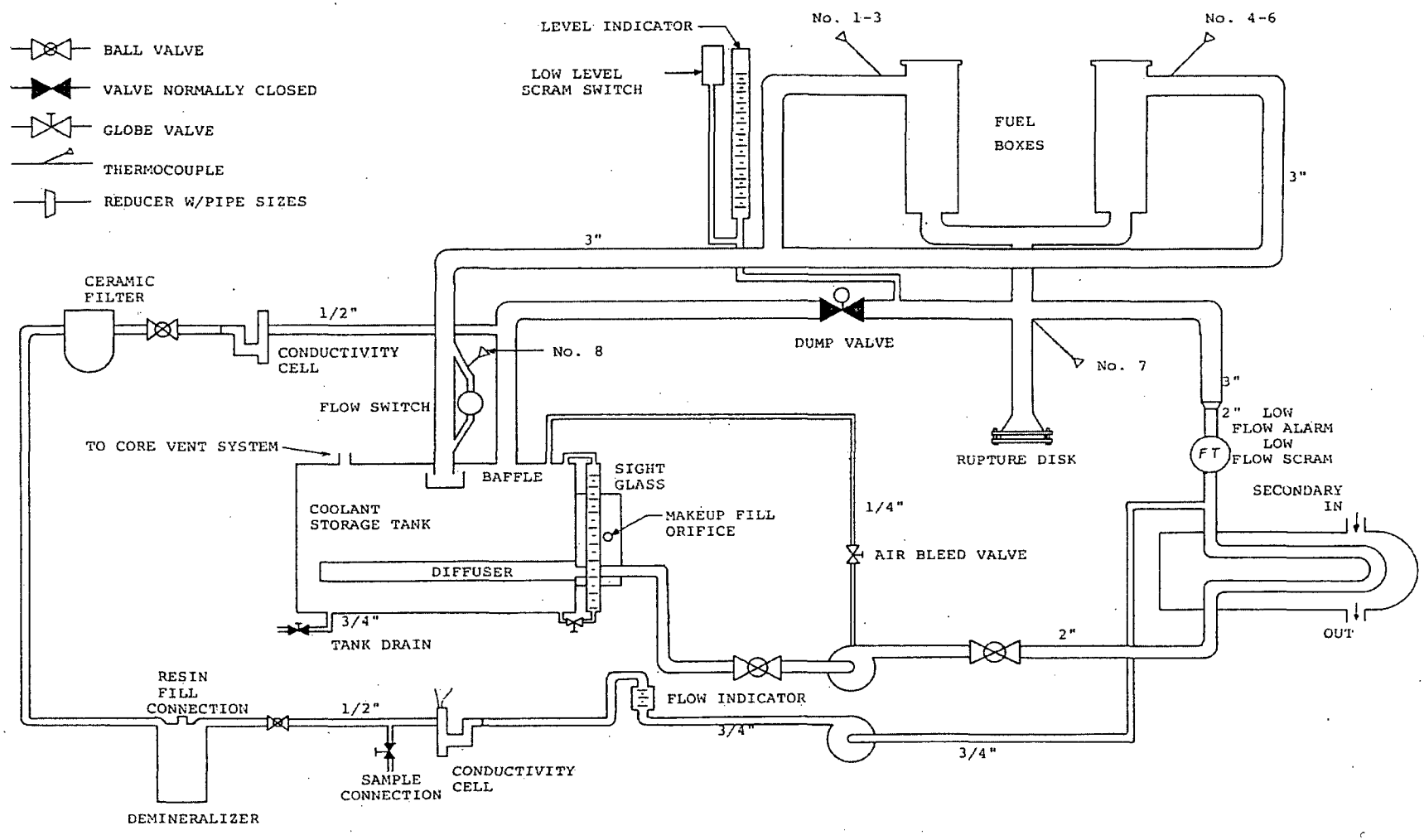

Figure 9-6 Schematic of UFTR Primary Coolant Loop and Purification Systems

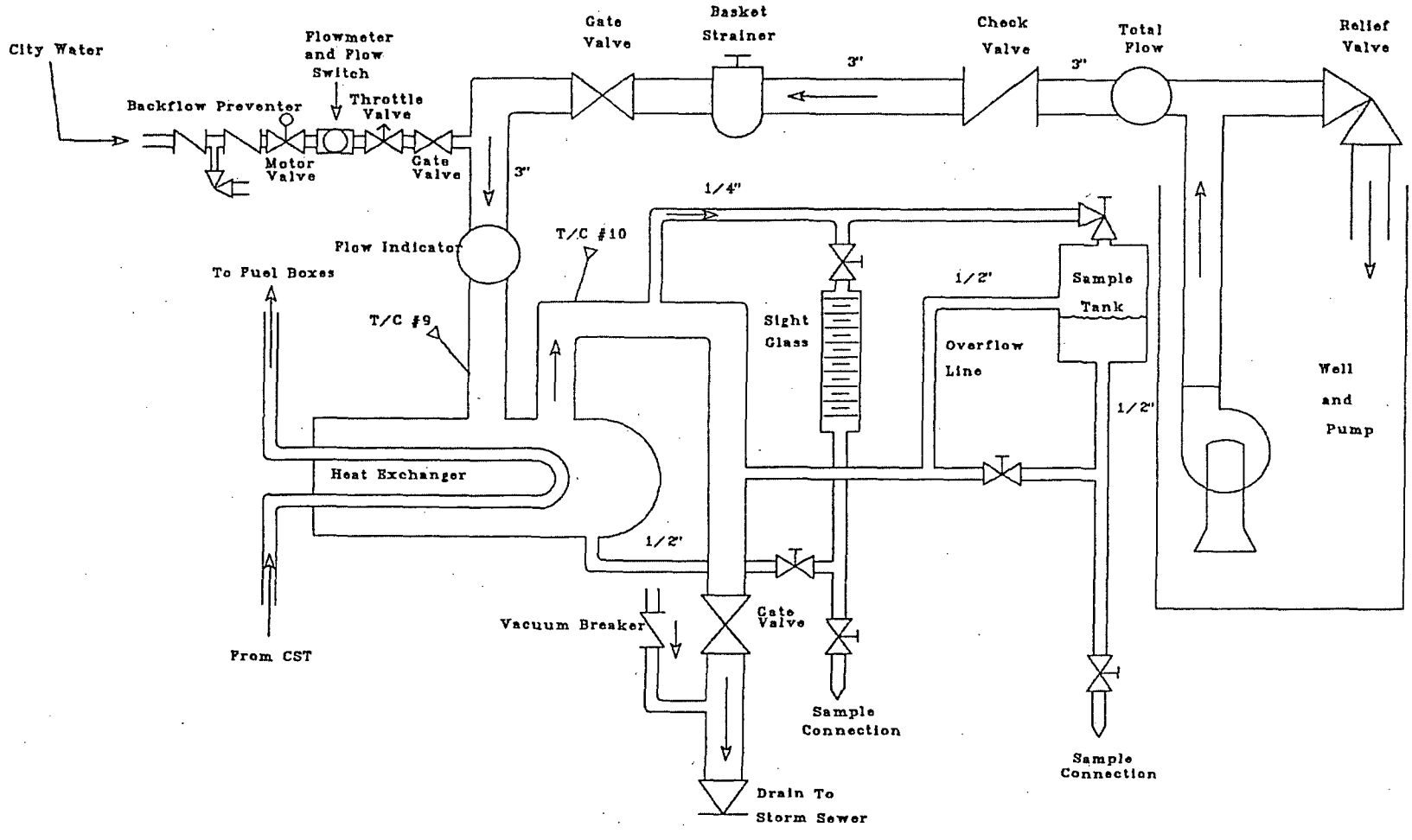

Figure 9-7 UFTR Secondary Water Cooling System.

References:

1. NRE, Department of Nuclear and Radiological Engineering, *"Standard Operating Procedures of the University of Florida Training Reactor"*. 2000, University of Florida: Gainesville, Fl.
2. *U.S. Atomic Energy Commission, "University of Florida Facility License as Amended"- License No. R-56.*

CHAPTER 10

EXPERIMENTAL FACILITIES

AND

UTILIZATION

Table of Contents

Table of Figures

10 Experimental Facilities

10.1 Summary Description

The UFTR is used as a teaching and training tool, for research operations and provides a range of irradiation services. These irradiation services include isotope production (both medical and industrial), neutron activation analysis (e.g., geological samples) and neutron radiography.

The experimental facilities in the UFTR include:

1. Foil slots: Sixteen (16) vertical foil slots placed at intervals in the graphite between the fuel compartments, each are 3/8 in. by 1 in.;
2. Experimental holes: - Three (3) vertical experimental holes of 1-1/2 in. located centrally with respect to the six fuel compartments;
   - Five (5) vertical holes 4 in. by 4 in.;
3. Horizontal thermal column having 60 in. x 60 in. x 56 in. high;
4. Vertical thermal column having 2 ft. diameter x 6 ft.;
5. A shield tank placed against the west face of the reactor opposite the thermal column;
6. Six (6) horizontal openings (beam tubes) 4 in. in diameter are found on the center plane of the reactor;
7. A horizontal throughport is an approximately 1.88 in., ID pipe with 20 ft. length running east-west across the reactor (EWTP). It is available for installation but usually not installed;
8. A pneumatic transfer facility (rabbit system);

Shield plugs are normally inserted in these facilities except where an experiment or test requires otherwise.

The overall physical arrangement of these exposure facilities is depicted in Figure 10-1, which is a horizontal section through the reactor at the beam tube level. More detailed sketches of the size and orientation of these exposure facilities are presented in Figure 10-2 for the center vertical port and horizontal throughport and in Figure 10-3 for the other major experimental exposure facilities.

10.2 Experimental Facilities

10.2.1 Foil Slots

System vertical foil slots, 3/8 in by 1 in. are located at intervals in the graphite between the fuel compartments and may be used for flux mapping. The foils can be installed by lifting off the top shield, placing the foil holders, replacing part of the shield

as deemed necessary for irradiation, and removing it to recover the foils. Shield removal can be accomplished by the use of the bridge crane.

10.2.2 Experimental Holes

There are three (3) vertical experimental holes, 2",1-3/4",1-1/2" in diameter, which are centrally located with respect to the six fuel compartments. The maximum neutron flux is available in the vicinity of these ports; therefore they may be used for neutron irradiation of samples or for installing an oscillator. Mated openings are provided in the upper shield for convenience in the use of these holes.

10.2.3 Thermal Column

A thermal column is provided in the east face of the reactor having four 4 in. by 4 in. removable stringers. The horizontal thermal column is 60 in. x 60 in. x 56 in. high; the vertical thermal column comprises an area 2 ft in diameter by 6 ft. long. Experiments requiring highly thermalized neutrons can be placed in the thermal column or in the emergent beam.

10.2.4 Experimental Ports

Six other horizontal openings, 4 in. in diameter are located in the center plane of the reactor as shown in Figure 10-3. These horizontal holes (or ports) may be fitted with collimators to allow neutron beams to escape or with other equipment for special samples.

10.2.5 Shield Water Tank

A water tank is placed against the west face of the reactor opposite the thermal column and is shielded on the outer three sides by concrete. Shielding is usually installed over the shield tank to limit sky shining radiation levels but is not required and may be removed for experimental purposes. This 5 ft. x 5 ft. x 14 ft. high shield tank can be used to perform shielding experiments or for the irradiation of large objects. If the location does not give sufficient fast neutrons, the thermal neutrons leaving the face of the reactor can be converted to fast neutrons by a converter plate installed inside the tank. An aluminum pipe may be used to permit the extraction of a neutron beam. This horizontal aluminum pipe passes through the shield tank outer wall and is welded to the reactor west face. The tube allows the insertion of the east-west throughport (EWTP). The EWTP, or horizontal throughport, is a horizontal tube approximately 1.88 in ID x 20 ft. in length. If the shield tank is not needed for experiments, it can be removed after draining by lifting it out with the crane and other equipment installed in that area [1].

10.2.6 Automatic Transfer System (Rabbit)

The UFTR pneumatic sample transfer system, shown in Figures 10-4 and 10-5, is a pneumatic system designed to quickly transfer samples into and out of the reactor core. The specimens are placed in a small polyethylene capsule (rabbit) which in turn is placed into the receiving station. The rabbit travels through a polyethylene tube from the receiving station to the west side of the shield tank. The polyethylene tube is connected to an aluminum pipe which goes throughout the shield tank to the reactor center line. The rabbit returns along the same path to the receiving station. Directional nitrogen gas flow moves the rabbit between the receiving station and the end of the aluminum tube (center of reactor). A regulator valve supplies nitrogen gas to the system and a solenoid valve directs air flow. Controls to operate the regulator valve and the solenoid valve are wall-mounted behind the rabbit control station. The gas flow design is such that the rabbit system is never pushed but rather pulled from place to place, minimizing the possibility of fragments from a shattered rabbit becoming trapped in the center of the reactor. Samples may be inserted for automatic insert and return or manual insert and return.

The pneumatic system is composed of:

1- Tubing that replaces the east-west throughport.
2- Receiving station in Radio Chemistry Laboratory, adjacent to the reactor building with the following characteristics:
   - driven by pressurized nitrogen gas, bottled (inert, low activation)
   - auto timer supplied on control unit and.
   - manual/automatic control option on control unit.
3- Connection to core side assembly within reactor structure via polyethylene tubing.
4- Venting through the core vent system for monitoring of discharge.
5- Communications made through intercom system or telephone receiver.
6- Manual and electrical disable features:
   - Manual: two valves on polyethylene tubing external to west reactor face, one on insertion line and one on purge line: valves are open when handles are aligned with tubing.
   - Electrical: switch on east side of control console; energization requires log entry by reactor operator documenting the individual serving as certified rabbit operator and survey meters to be used to monitor irradiated samples.
7- Connection line that may be used for cell atmospheric sampling in emergencies with proper valve realignment (see Figure 10-6).

10.3 Experiment Review

The UFTR experiment review and authorization process are also described in the UFTR SOP-A.5 (Experiments)[2]. Any experiment requires a request for UFTR operation. The Reactor Manager, the Director of the Nuclear Facilities and the Radiation Control Officer review and approve all proposed experiments. The Reactor Manager may refer to the Reactor Safety Review Subcommittee (RSRS) the evaluation of the safety

aspects for new experiments and any change in the facility that may be necessitated by the requirements of the experiment and that may have safety significance. The experiment review and approval process is depicted schematically in Figure10-7.

Experiments are classified in four categories; the basis for the classification of experiments is the degree of novelty and potential for presenting a hazard to the reactor, to UFTR personnel or to the general public. The four categories are as follows:

Class I Experiments include routine experiments such as gold foil irradiation. Class I experiments are readily approved by the Reactor Manager; the Radiation Control officer may be informed if deemed necessary.

Class II Experiments include relatively routine experiments which need to be documented for each new group of experimenters performing them, or whenever the experiment has not been carried out for one calendar year or more by the original experimenter and which pose no hazard to the reactor, to UFTR personnel or to the public. Class II experiments are approved by the Reactor Manager and the Radiation Control Officer.

Class III Experiments consist of those which pose significant questions regarding the safety of the reactor, UFTR personnel or the public. Class III experiments are approved by the Reactor Manager and the Radiation Control Officer after review and approval by the UFTR Reactor Safety Review Subcommittee, which recommends procedures and/or devices to minimize hazards.

Class IV Experiments comprise all experiments which have a significant potential for hazard to UFTR personnel or the public. Class IV experiments are approved by the Reactor Manager and the Radiation Control Officer after review and approval by the UFTR Reactor Safety Review Subcommittee. Such experiments are approved for performance under the direct supervision of the Reactor Manager or a duly authorized representative and specific emergency operating instructions must be established for conducting such experiments. A detailed description of the expected behavior of the facility during the proposed experiment along with accompanying emergency procedures specific to the experiment are required by the UFTR Reactor Safety Review Subcommittee before permission to perform the experiment is granted. Experimental procedures, criteria for evaluation and required documentation are specified in UFR SOP-A.5 [2]. Experimental limitations are included in the Technical Specifications for the UFTR.

[

]

Figure 10-1 Horizontal Section Diagram of UFTR at Beam Tube Level

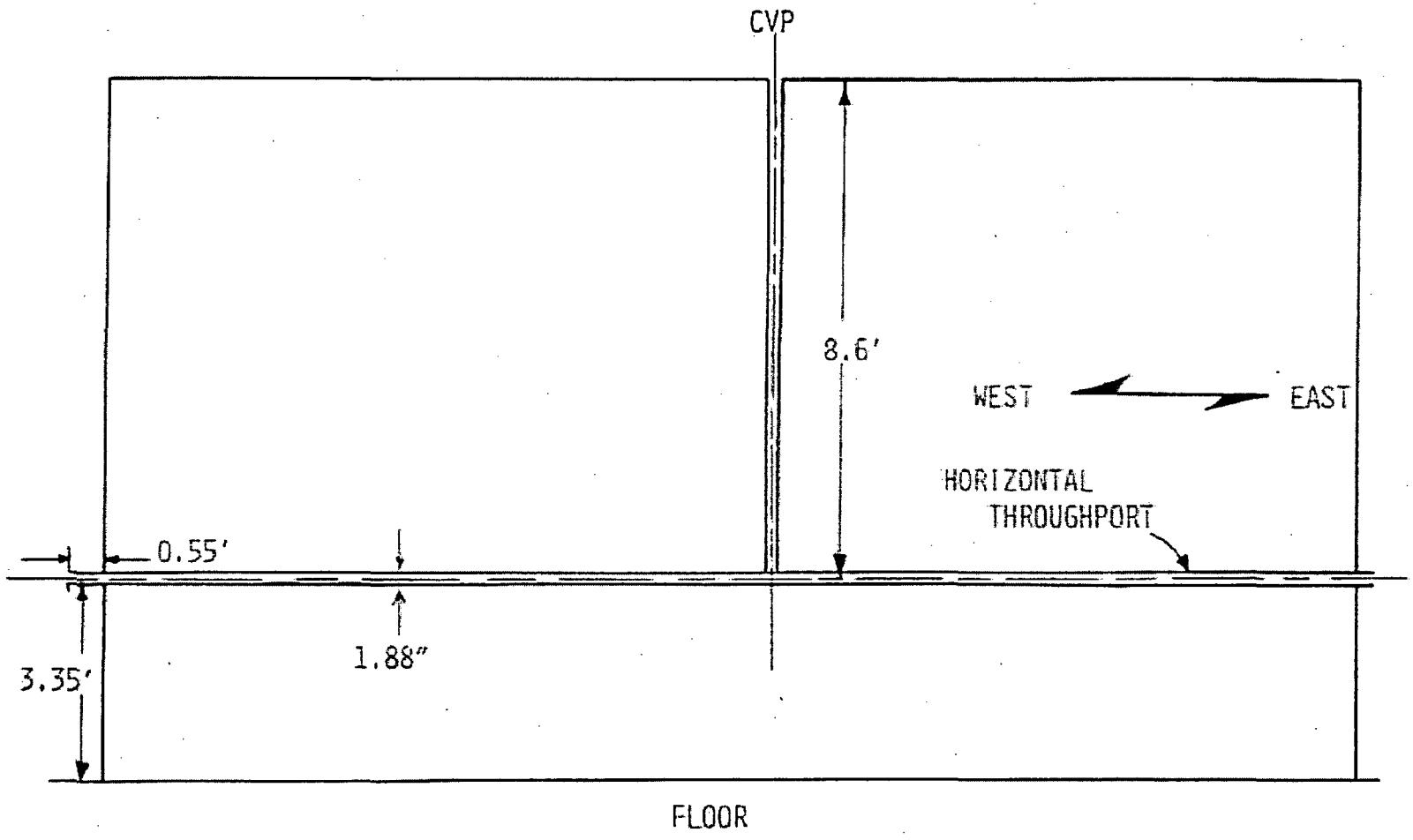

Figure 10-2 **UFTR Cross Section Showing Center Vertical port (CVP) and East-West Through Port (EWTP) Arrangement with Dimensions (not to scale)**

[

]

Figure 10-3 Geometric Arrangement of Major UFTR Experimental Facilities

[

]

Figure 10-4 Vertical Cut of the Reactor Showing the UFTR Rabbit System

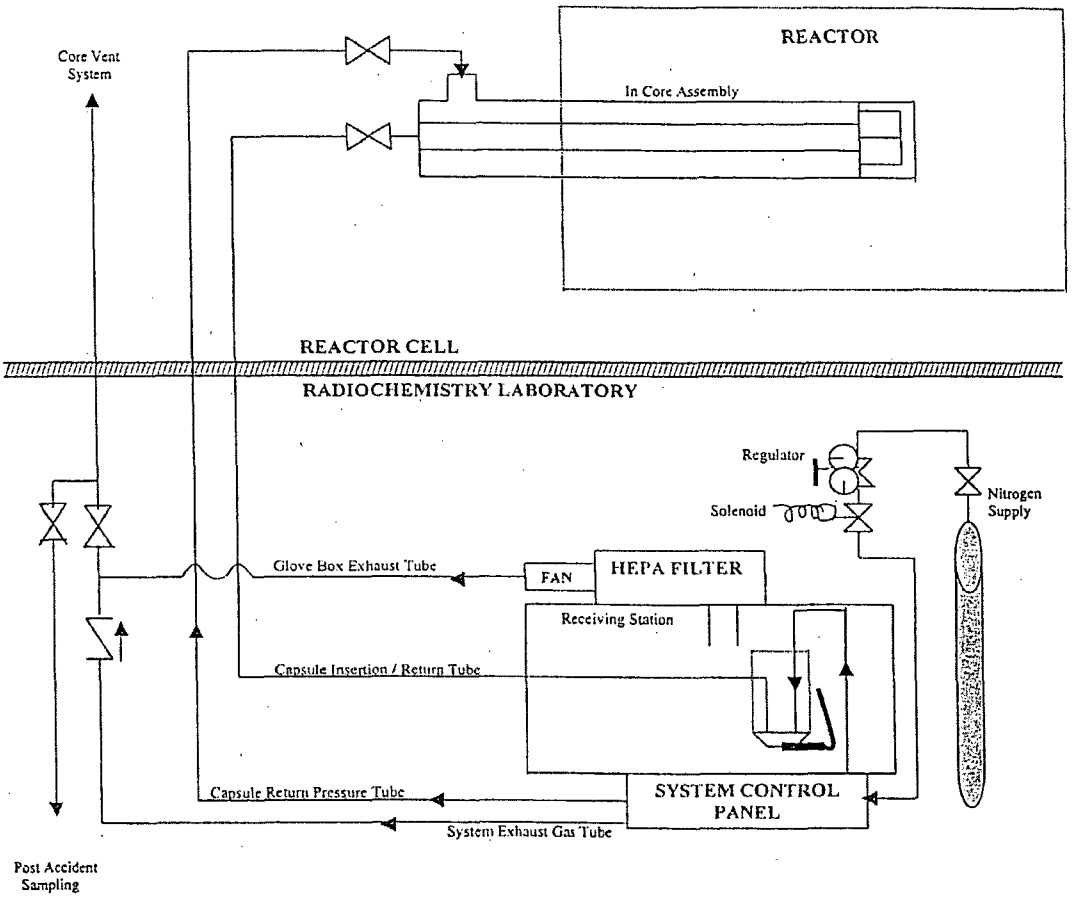

Figure 10-5 UFTR Rabbit System

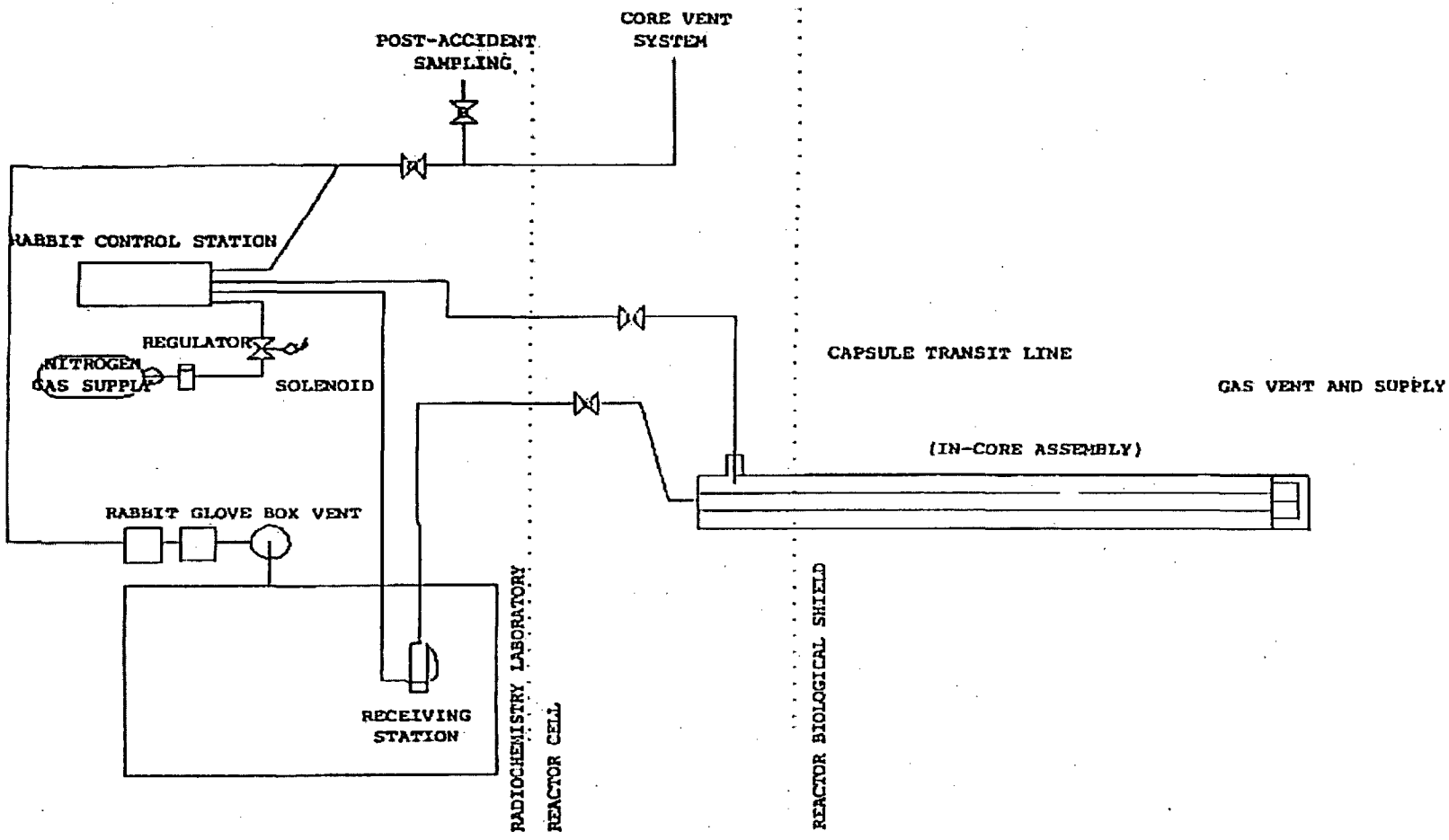

Figure 10-6 Rabbit System with post-accident sampling modification plus in-cell sample gas return line stop valves

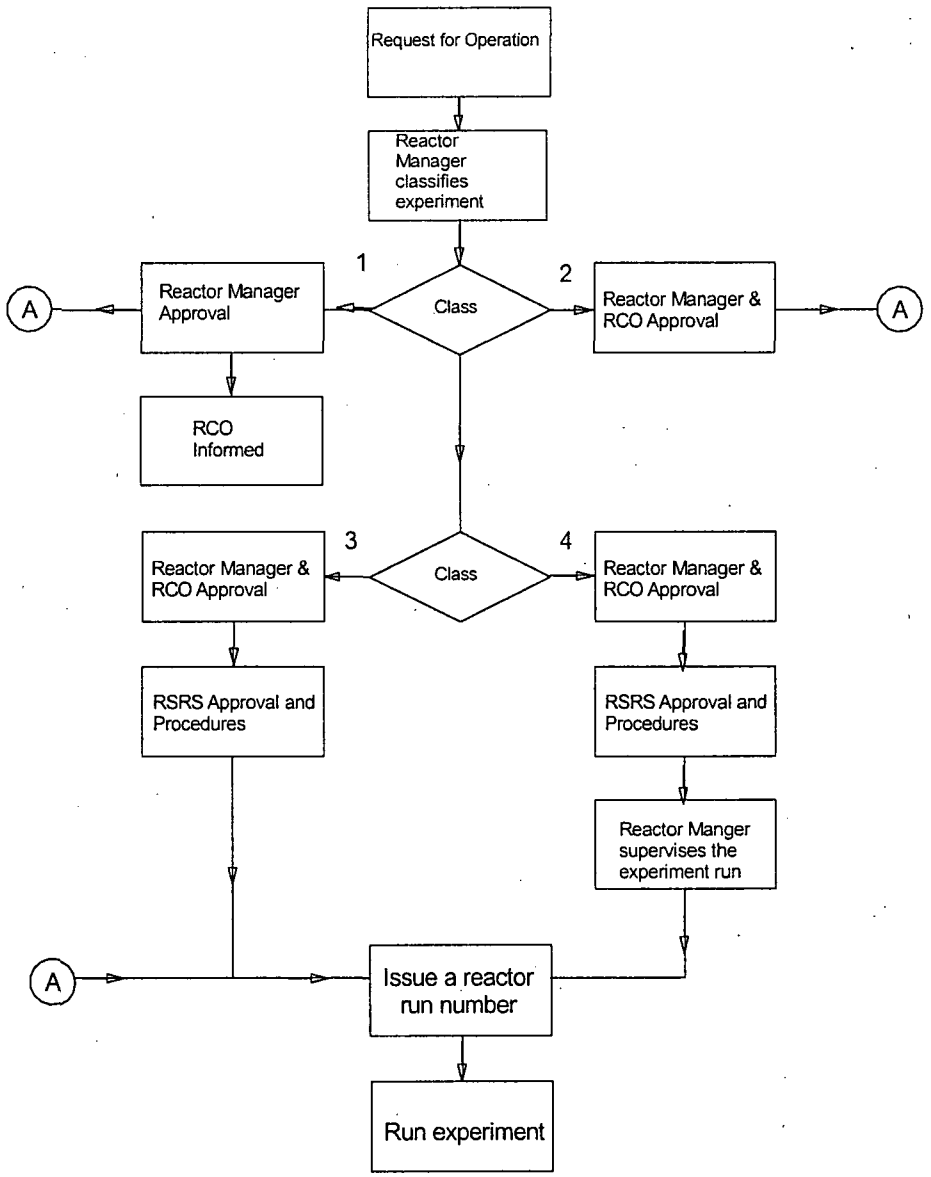

Figure 10-7 UFTR Experiment Review and Approval

References:

1. J.A. Zuloaga, J., *"Operational Characteristics of the Modified UFTR"*, in *Department of Nuclear and Radiological Engineering*. 1975, University of Florida: Gainesville, Fl.

2. SOP-A.5, UFTR Operating Procedure A.5, Experiments, 1988

CHAPTER 11

RADIATION PROTECTION PROGRAM

AND

WASTE MANAGMENT

TABLE OF CONTENTS

Index of Tables

Index of Figures

Index of Appendixes

11 RADIATION PROTECTION AND WASTE MANAGEMENT

This chapter presents the overall UFTR radiation protection program and the corresponding program for management of radioactive waste.

11.1 Radiation Protection

The UFTR is operated by the Department of Nuclear and Radiological Engineering of the University of Florida for the purpose of instruction and research. As such it is one of many facilities on campus that involve the use of ionizing radiation and for which personnel radiation exposures must be maintained as low as reasonably achievable (ALARA).

11.1.1 Radiation Sources

The radiation sources present at the UFTR can be categorized as airborne, liquid or solid. A discussion of each category is presented in Sections 11.1.1.1 to 11.1.1.3. The sources of radiation which are the basis for required radiation protection during operation are primarily the core neutron and gamma ray fluxes. Sources activated for experimental purposes in the UFTR experimental ports are also a concern but only after they have been removed from the reactor. Previous radiation exposure measurements indicate that the radiation hazard in the reactor cell due to both thermal and fast neutrons is negligible; therefore, the main concern is the gamma exposure [1].

The major contributors to each source category can be summarized as follows:

- Airborne sources: Argon-41;
- Liquid sources: reactor primary coolant;
- Solid sources: fuel in use, irradiated fuel, neutron start up sources, irradiated materials and solid waste.

11.1.1.1 Airborne Radiation Sources

The UFTR is designed to be a minimum leakage facility. Fission products are contained within the fuel elements and credible escape mechanisms of these fission products during normal or abnormal reactor operation are not available since the integrity of the fuel is not affected at any time during reactor operation.

The only radioisotope of concern is the Argon-41 produced in the UFTR as a result of neutron activation of the Argon-40 in the air drawn in through the crevices in the concrete and the graphite reflector. Leakage of these activated gases into the reactor cell is prevented by drawing air from the cell, through the reactor and out the exhaust stack

with the Ar-41 constituting the only radioisotope of concern. Rough and absolute filters in the Reactor Vent System minimize the discharge of air particulates to the environment.

Since Argon-41 production is proportional to thermal power produced by the UFTR, a historical summary of UFTR energy generation is presented in Table 11-1. This summary contains total energy generated (kW-h) and hours at full power for all UFTR reporting years from September, 1971 through August, 2001.

The natural atmospheric argon is responsible for virtually all of the neutron-induced radioactivity released to the stack [2]. The other gaseous components of air are either too rare, have small activation cross sections, or produce activated products having half-lives too short to be of significance. The combination of argon properties shown in Table 11-2 accounts for the fact that Argon-41 provides essentially all of the radioactivity to be found in the reactor ventilation air leaving via the building stack from the Core Vent System [3].

Two experimental determinations provide sound evidence to support the contention that the measured activity is due to Argon-41 decay [3]. First, the photopeak energy of the stack air samples was determined to be 1.29 MeV using an energy calibrated gamma scintillation spectrometer which corresponds to the gamma energy associated with Argon-41 decay shown in Table 11-2. Second, a half-life determination was made and the experimentally determined decay curve presented in Figure 11-1 verifies that the sample activities decay with a half-life of about 110 minutes. Since these values are characteristic of Argon-41 and no other radionuclides are detectable, the radioactive contribution of Argon-41 is demonstrated.

Lochamy [3] performed extensive Argon-41 sampling studies for the UFTR. Lochamy's samples were drawn at the base of the stack prior to dilution. Each sample was passed through a drying apparatus made of silica gel and spun glass prior to collection in an evacuated flask. The analysis was performed in a low-background counting room by gamma scintillation spectrometry. The results of the stack activity experimental measurements taken at different power levels up to 90 kWth are presented in Figure 11-2 where each value is the average of several measurements taken at the different equilibrium UFTR power levels. Analysis of the dependence of measured stack activity on UFTR power level resulted in the expected linear fit shown in Figure 11-2 which has a slope of 6.7 pCi/cm^3 - kW.

The following is a summation of Lochamy's data [3]:

Vent Flow rate:..... 376 cfm
Exhaust Flow Rate:.....13,402 cfm
Average Argon-41 Stack Activity per Unit Power Level:.....6.7 pCi/cm^3-kW

At 100 kWth, a stack sample activity value of 670 pCi/cm^3 is extrapolated from the data presented in Figure 11-2. When the dilution factors of 35.6:1 for the stack and

200:1 atmospheric dilution authorized by the Nuclear Regulatory Commission are used, this value yields 9.4 x 10^{-8} μC/ml which is a factor of 9.4 above the effluent concentration limit for releases[4] to an uncontrolled area at any instant of time at the 100 kWth power level.

In June and July of 1977, the UFTR staff conducted another survey. Using a 92 cm^3 Navy type gas collection chamber, samples were drawn at different points at the horizontal plane at the stack discharge at the 100 kWth equilibrium power level. The samples were counted using an Ortec Ge-Li detector whose signals were processed by a Tracor Northern TN-11 computer based multichannel analyzer using a spectrum analysis system.

The activity results at the stack discharge at the 100 kWth power level are as follows:

Average Argon-41 Sample Activity ..... 2.48 x 10^{-5} μCi/ml

Activity with Authorized Atmospheric Dilution (200/1) ..... 1.24 x 10^{-7} μCi/ml

Effluent Concentration Limit[4] ..... 1.0 x 10^{-8} μCi/ml

Because of this analysis showing the diluted Argon-41 release concentrations at 100 kWth to be a factor of 12.4 above the MPC for this activity, certain restrictions have been placed upon UFTR operations as discussed in Section 11.2.2.1. Additional work on evaluating the Argon-41 measurement methodology conducted in 1988-1989 has substantiated the general validity of previous measurements as have semiannual stack effluent measurements performed to meet Technical Specifications requirements.

11.1.1.2 Liquid Radioactive Sources

The only liquid source present in the UFTR is the primary coolant water. No other significant liquid radioactive material is produced by the normal operation of the UFTR. Miscellaneous neutron activation product impurities in the primary coolant water if present are deposited in the filter and demineralizer resins and treated as solid waste. Based on data obtained from samples collected weekly during the past years the activity (beta) observed in the primary water tank is typically between 1.3x10^{-7} μCi/ml and 1.5x10^{-7} μCi/ml.

11.1.1.3 Solid Radioactive Sources

The solid radioactive sources associated with the normal operation of the UFTR are the fuel in use, irradiated fuel in the fuel storage pit, new fuel stored in the fuel safe, neutron startup sources, fission chambers, solid wastes and activate materials including reactor structure and systems as well as experimental devices.

The two startup sources, an SbBe source of less than 25 Ci fully charged and a one curie PuBe source can be neglected as sources of exposure when compared to the other radiation sources present in the UFTR. The same is true for activated experimental devices and fresh unirradiated fuel.

11.1.2 Radiation Protection Program

With the increased utilization of ionizing radiation at the University of Florida, the administration established a University-wide Radiation Control Program on September 23, 1960. The Radiation Control Program establishes a University Radiation Control Committee (URCC) and a Radiation Control Officer which, together, ensure that occupational radiation exposures are maintained as low as reasonably achievable. Line responsibility for the University of Florida Radiation Control and Radiological Services Department derives from the President and resides primarily with the Radiation Control Officer as indicated by the flow diagram presented in Figure 11-3. The primary purpose of the program is to assure radiological safety to all University personnel and the surrounding community, and to make certain that sources of ionizing radiations are procured, utilized and stored in accordance with Federal and State regulations. The Radiation Control Committee is responsible for advising the President of the University on all matters related to radiation safety, for reviewing and approving all proposed procurement and use of radioisotopes and machines generating ionizing radiation including the UFTR. The specific responsibilities of the Radiation Control Committee are enumerated below as set forth in a memorandum from the Office of the President of the University of Florida dated September 23, 1960 and updated and revised in the latest, February, 1997, issue of the University of Florida Radiation Control Guide [5].

1. Review and grant permission for or disapprove the use of radioactive isotopes or other sources of ionizing radiation within the institution from the standpoint of radiation safety.

2. Prescribe special conditions and requirements which may be necessary to assure radiation safety (for example, physical examinations, additional training, designation of limited areas or locations of use, disposal methods, etc.).

3. Prepare and disseminate information on radiological safety including University, State, and Federal regulations governing ionizing radiation for use and guidance of students and staff.

4. Pass judgment on the adequacy of safety measures for safeguarding University research workers. Committee approval of health and safety measures must be obtained before initial use of radioisotopes or other ionizing radiation is undertaken or before substantially different uses from those originally approved by the Committee are undertaken. After the issuance of a restraining order by the Committee, the staff member (user) concerned would have a final recourse to the

Director, Environmental Health and Safety, after approval for such action by the staff member's Dean or Chairman (as appropriate).

5. Keep records of the actions taken in approving the use of radioisotopes and other sources of ionizing radiation and other transactions, communications, and reports involved in the work of the Committee.

6. Delegate to the Radiation Control Officer the authority to act for the Committee between meetings. All such actions will be reported to the Committee for review at appropriate intervals.

7. Review plans for all new buildings and modifications of existing structures where ionizing radiation is to be used.

8. Recommend and implement procedures for radioactive waste disposal.

9. Periodically review actions of the Reactor Safety Review Subcommittee.

10. Review, at least annually, from a radiation safety standpoint, the activities of the Committee on Human Use of Radioisotopes and Radiation.

11. Review all ongoing projects at timely intervals.

12. Provide advice to research groups, departments and investigators.

The Radiation Control Committee has designed procedures and policies in the form of a document entitled "Radiation Control Guide," [5] in an effort to provide investigators using ionizing radiations with guidelines necessary to maintain their facilities in a manner that assures radiological safety. These regulations and procedures are consistent with regulations of the Nuclear Regulatory Commission and the Florida Department of Health; they are applicable to all facilities under the administration of the University of Florida including the UFTR facility.

Administrative Affairs Memorandum No. 22 of May 24, 1974, structures a Radiation Control and Radiological Services (RC&RS) Department, headed by the Radiation Control Officer, under the Environmental Health and Safety Division.

As set forth in the above-mentioned Presidential memorandum and revised and updated in the February, 1997 issue of the University of Florida Radiation Control Guide, the duties and responsibilities of the Radiation Control Officer include [5]:

1. Administer and be responsible for the overall day-to-day programs of the University's Radiation Control Office

2. Approve all University procedures which might conceivably involve radiation exposure and all changes in such procedures.

3. Act in a supervisory capacity in all aspects of the University radiation measurement and protection activities, such as personnel monitoring, maintenance of exposure records, survey methods, waste disposal, and radiation safety practices.

4. Consult with potential radioisotope users and advise on radiation safety practices.

5. Suspend any operation causing excessive radiation hazards as rapidly and safely as possible. In carrying out this duty, the Radiation Control Officer reports directly to the Director, Environmental Health and Safety.

6. Maintain a list of all employees who may be exposed to ionizing radiation.

7. Prescribe routine radiation surveying and personnel monitoring.

8. Establish standardized procedures for the procurement of radioactive materials.

9. Serve as an ex-officio member of all radiation safety committees constituted at the department, college, experiment station, or University levels.

The Radiation Control Officer is specifically responsible for implementing and enforcing the radiological safety program at the UFTR facility. The actual minimizing of occupational radiation exposures to meet the ALARA objective is the direct responsibility of the staff and faculty associated with the UFTR facility.

The Radiation Control Committee is comprised of representatives from departments involved in the use of ionizing radiations. The Radiation Control Officer is a qualified health physicist appointed by the Director of Environmental Health and Safety Division of the University of Florida.

Charter, rules, review and audit functions of the URCC and its subcommittee are presented in Chapter 12.

11.1.2.1 Design Considerations

The UFTR has been designed and is controlled to achieve "as low as reasonably achievable" radiation exposures during normal operation. This level of safety is a result of several basic design principles:

1. Radiation shielding of a type, quantity and layering to permit maximum experimental irradiation with a minimum of radiation exposure to faculty, students and personnel involved with experimental activities.
2. Complete containment of fuel and fission products within the core and associated auxiliary equipment.

3. Simplicity of the design and operation of the reactor to assure high system reliability.
4. Conservative design demonstrated in a low power density to assure large safety margins in all operating conditions.

Past operating experience with the UFTR facility rated at 100 kWth demonstrates that the system design is compatible with and adequate for minimizing occupational exposures during operation. Experience with the operation of the similar argonaut-type UCLA training reactor in Los Angeles, California at 100 kWth rated power level further demonstrated that the design features of the UFTR do ensure not only that occupational exposures are kept far below 10 CFR 20 limits but also that occupational exposures meet the ALARA criterion.

11.1.2.2 Operational Considerations

The UFTR is essentially a minimum release facility excluding Ar-41 releases; by proper operation, minimal radiation levels are encountered during normal operation. In general, the operating philosophy for maintaining occupational radiation exposures as low as reasonably achievable for the UFTR facility will follow the guidelines put forth in NRC Regulatory Guide 8.10. However, the management of the UFTR facility is strongly committed to maintaining exposures as low as is reasonably achievable as promulgated in the UFTR ALARA Program approved as of December 31, 1993. All facility personnel are made aware of this goal and are required to follow and abide by the procedures and preset limits set forth in the UFTR Standard Operating Procedures, Technical Specifications and other documents related to assuring the ALARA criterion is met.

Since a primary purpose of the reactor facility is to educate and train students, it is necessary to emphasize to students at the outset the danger of carelessness around the reactor and the need to keep exposures to a minimum. The Radiation Control Officer and/or facility personnel instruct students regarding hazards and safety practices during their first session at the reactor.

Radioactive samples are removed from the reactor only under careful supervision of a qualified staff member according to the UFTR Standard Operating Procedures-SOPs [6] and with approval of a qualified reactor operator. When necessary, shielding is used to reduce radiation levels to safe values and conclusive radiation surveys are taken during the transfer of radioactive samples or other materials. All persons handling radioactive materials are instructed in correct procedures, use of survey instruments, and allowable radiation levels. In addition, students and faculty using the facility are kept informed on the subject of radiation protection through the Office of Radiation Control. The Radiation Control Office distributes the University of Florida Radiation Control Guide and requires proven training and expertise in the handling and control of radioactive substances before granting approval for possession of radioisotopes. UFTR personnel release radioactive materials to approved users, as determined by Radiation Control. Facility operation

personnel are trained and qualified on radiation control through the UFTR Requalification and Recertification Training Program.

In general, the Radiation Control Officer is given authority to enforce safe reactor operation for radiation protection as shown in the Technical Organization in Chapter12, Section 12.1.5. Any modifications in facility operating and maintenance procedures which have the potential to reduce exposures are encouraged by the ALARA Program and are considered for implementation by the Reactor Safety Review Subcommittee. In general, the Radiation Control Officer and all facility personnel are familiar with sources of radiation exposure and try to reduce exposures to a minimum by all reasonable means available.

11.1.2.3 Radiation Protection Design Features

The simplified design and low radiation levels associated with the UFTR facility greatly reduce the presentation requirements of this section.

11.1.2.3.1 Shielding

During normal operation at the 100 kWth rated power level, the shielding supplied by the present system is adequate for all the "core" and activation (biological shield) sources of radiation discussed in Section 11.1.1. Additional shielding is available in the form of cast concrete blocks, lead bricks, shield casks, small concrete blocks and various sheet shielding materials such as lead which can be used as special shielding during experiments, around activated sources, or during high power operations. In order to reduce the radiation exposure from experiments to ALARA levels, radiation surveys are conducted for all except routine experiments to determine whether special shielding configurations are needed. When necessary to meet the ALARA criterion, such special shielding configurations are installed.

Shielding calculations are presented in Chapter 4 Section 4.4.

11.1.2.3.1.1 Radiation Surveys

Studies have been conducted in the reactor cell and adjacent areas to evaluate the ability of the UFTR biological shield to provide adequate radiation protection at the rated 100 kWth power level. Previous exposure measurements have indicated that both thermal and fast neutron contributions to the radiation hazard in the reactor cell are negligible; therefore, only gamma radiation exposures are considered in this report as recorded by Wagner[1]. Radiation survey data taken around the reactor structure and adjacent areas with no external shielding, during operation at the 100 kWth power level, are indicated on the sketch of the reactor cell floor plan presented in Figure 11-4. It is important to note that this radiation survey data represents the reactor with no external shielding.

Additional temporary shielding is available and used during normal high power operation. This additional shielding consists of lead bricks at the base of the reactor on the north and south faces and a large cast concrete block on the west side.

All gamma exposure rates were recorded with a vibrating-reed Victoreen Survey Meter which was calibrated with a Cobalt-60 source. Additional survey results for various areas within the reactor cell are given in Figures11-5 through 11-8. Figures 11-5 and 11-6 indicate that a strong source of radiation existed below the reactor resulting from a large void (approximately 3.5' x 0.56' x 8.0') below the fuel box support structure. Following filling of this void with sand, the results of later measurements of gamma exposure rates shown by smaller numbers in Figure 11-6 indicate that the strong source of radiation from the void is essentially eliminated from concern. High levels of radiation are also indicated on the north and south sides of the shield tank as indicated in Figures 11-7 and 11-8. The radiation level above the shield tank is reduced from about 150 mR/h to 15 mR/h by the shield block cover. Area monitors which are located on the upper part of the north, east, and south walls of the reactor cell indicate readings of 1.0, 1.5, and 0.4 mR/h respectively, and show little dependence upon whether or not the shield block is over the shield tank. Additional surveys in this series indicate the following radiation levels for certain special areas at 100 kWth operation:

1. Radiation levels of ~0.4 mr/h are recorded at the console in the reactor control room.

2. An average exposure rate of 40.9 mr/h is recorded in the area directly outside the emergency exit doors to the West of the reactor significantly reduced to below 2 mR/h by the controlled shielding on the west side of the reactor shield.

3. A radiation level of ~0.2 mr/h is recorded at the surface of the wooden door leading to the workshop to the north of the reactor building which houses the dilution fan for Argon-41 stack releases. Exposure rates are below 0.05 mr/h outside the concrete barrier surrounding the fan.

The most complete recent survey of UFTR cell radiation levels during 100 kW operation is summarized in Appendix 11-A at the end of this chapter.

11.1.2.3.2 Ventilation

As presented in Section 3.1 and Section 9.1.1, the reactor cell is completely air conditioned. The air conditioning unit has a design capacity of 6050 cfm, with a total air delivery of 1500 cfm, at 75° F, dry bulb, and 50 percent relative humidity, summer and winter. All inlet and circulated air is filtered through a 2-inch thick, dry, spun glass, cleanable-type roughing filter capable of removing particles of 5 microns or larger in size with an efficiency of 85 percent or better. The inlet air duct is provided with a motor-operated damper to close the duct whenever the unit fan is not operating. Condensate from the unit is drained to an indoor condensate tank. This water is then transferred to an

outdoor aboveground waste water holdup tank, the contents of which are sampled and analyzed prior to release to the sanitary sewer per 10 CFR 20.

The room exhaust air is used to ventilate the reactor structure. This air is exhausted by pulling 1 to 400 cfm of room air past the inside reactor structure. This air is then passed through a rough and an absolute filter, through an automatic damper valve, past a pitot tube for flow sensing, and into a plenum chamber at the base of the stack where it is monitored for radioactivity by a GM detector. The activity level of the air is indicated and recorded in the control room with adjustable audible and visual alarm level.

After leaving the plenum chamber, the core vent air is diluted with about 10,000 c.f.m (miminum), of outside air which enters the stack above the plenum chamber. As the effluent plume leaves the stack, a further atmospheric dilution factor of 200 to 1 is applied for the purpose of determining radioactivity concentrations in the environment. It is then discharged through the stack extending above the roof of the UFTR building.

This ventilation, filtering and dilution process assures a reduced likelihood of radioactive gases escaping into the reactor room and reduces the amount of particulate and the concentration of effluent.

11.1.2.4 Health Physics Program

As indicated in Section 11.1.2, the increased utilization of ionizing radiation at the University of Florida led the administration to establish a University-wide Radiation Control Program in 1960. The primary purposes of this program are to assure the radiological safety of all University personnel and to make certain that ionizing radiation sources will be procured, used and stored in accordance with Federal and State regulations. To assure these ends, the Office of Administrative Affairs established the Radiation Control and Radiological Services Department under the Division of Environmental Health and Safety and headed by the Radiation Control Officer.

The Radiation Control Program provides a Radiation Control Committee and a Radiation Control Officer to carry out the responsibilities and necessary steps to insure radiological safety for the University and surrounding community. The Radiation Control Committee has designed procedures and policies in the form of a document entitled "Radiation Control Guide," in an effort to provide investigators using ionizing radiations with guidelines necessary to maintain their facilities in a manner that assures radiological safety. These regulations and procedures are consistent with regulations of the Nuclear Regulatory Commission and the Florida State Board of Health; they are applicable to all facilities under the administration of the University of Florida including the UFTR facility.

The UFTR Reactor Safety Review (RSR) Subcommittee, a Subcommittee of the University Radiation Control Committee, reviews and audits reactor operations for safety, insuring radiological safety at the facility as determined by the Radiation Control

Program. The Radiation Control Officer, an ex-officio member of the UFTR RSR Subcommittee ensures that the Radiation Control Program objectives, guidelines and limitations are carried out at the UFTR facility by supervising the actions of the UFTR RSR Subcommittee.

Delegation of responsibilities and duties of the Radiation Control Committee, and the Radiation Control Officer have been discussed in Section 11.1.2. Delegation of responsibilities and duties of the UFTR RSR Subcommittee are discussed in Chapter 2, Section 12.1.5. The basic philosophy of the Health Physics Program is to assure the health and safety of all university and other personnel directly related to the UFTR. This basic ALARA philosophy is reflected in the UFTR Standard Operating Procedures and Technical Specifications.

11.1.3 ALARA Program

Detailed specifications and procedures to assure that ALARA exposures are met and documented during UFTR operations are found in the UFTR Standard Operating Procedures. SOP D.1, "UFTR Radiation Protection and Control," describes the general Radiation Protection Program requirements and limits which must be observed to assure ALARA radiation exposures per the UFTR ALARA Program issued in December, 1993. Specific procedures to be followed during maintenance operations are included in the E-series (Maintenance Procedures) of SOPs [6]. Specific procedures and radiation limits related to fuel handling operations are included in SOP C. 1 and SOP C.2. Radioactive waste handling and shipment is addressed in SOP D.5.

The Reactor Safety Review Subcommittee (RSRS) performs formal audits periodically to determine ways by which to reduce exposures to individuals based on exposure records and recommendations from the UFTR facility operating personnel. Radiation protection responsibilities at the UFTR facility are assigned as described in Chapter 12 to provide effective radiation protection. These responsibilities of the operating organization at the UFTR facility are defined in detail in Chapter 12, Section 12.1.

The current University of Florida Training Reactor Facility as Low as Reasonably (ALARA) Program is contained in Appendix 11-B for reference.

11.1.4 Radiation Monitoring and Surveying

The UFTR radiation, monitoring and surveying system is structured such that the three categories of radiation sources are detected and assessed on a routine basis.

11.1.4.1 Area and Equipment Monitor Detector Assemblies

A three (3) train area radiation monitoring system is installed in the reactor cell. The detectors for this system are located as follows:

1. South side of the reactor cell, ~ 20 feet above the exit airlock.
2. East side of the reactor cell, centered - 10 feet above the floor.
3. North wall of the reactor cell, centered - 15 feet above the floor.

Each train of the area radiation monitoring system includes a detector, a log count rate meter, and a strip chart recorder.

The detectors are halogen-quenched GM detectors with a life expectancy virtually unaffected by use. The sensitivity of each detector is approximately 14 cps per mR/h, with an energy dependence compensated to 20 percent between 80 keV and 2.5 MeV.

The log count rate meter is adjusted for a four to five decade span for use with the GM detector in the range of 0.2 to 20,000 counts per second. The detector assembly (GM and log rate meter) is calibrated for readings in the range from 1.0 mR/h to 25 mR/h.

The strip chart recorder is a D'arsonval meter instrument which records signals from the log count rate meter for permanent record. All three radiation monitoring systems are calibrated quarterly with the assistance of the Radiation Control Office.

In the event of a loss of power, all radiation monitors operate on installed battery packs (rated to 8 hours) to insure their availability at all times.

11.1.4.2 The Stack Monitoring System

The Stack Monitoring System, consisting of a GM detector, a log rate meter and a strip chart recorder, is equivalent to the area radiation monitoring system. In addition to these, it may also include a log rate meter with an alarm setting capability for different operating power levels, with the information obtained from the log count rate meter. The GM detector is located on the downstream side of the absolute filter, before dilution takes place.

11.1.4.3 Continuous Air Monitoring System

An Air Particulate Detector (APD) is designed to detect airborne particulate activity. The APD is equipped with a flow indicator (LPM), a strip chart recorder and audible as well as visual alarm **indications**. The monitor is a compact airborne particulate counter which may be used in an occupational environment or in confined spaces. The air is drawn through a filter paper by a constant volume pump; the activity is detected by the

counter near the filter and recorded on the strip chart recorder. An alarm is activated whenever a high activity level is detected.

11.1.4.4 Radiation Monitoring

Operators and other personnel working in the reactor wear film, TLD, Luxel or other individual personnel **radiation dose** monitoring badges at all times. If indicated by the type of work, a direct-reading pocket dosimeter, or other dosimeter is worn as specified by the UFTR Standard Operating Procedures (SOPs) [6] which address radiation protection and control.

Various portable survey meters are also available to be used whenever it is deemed necessary and/or required by the SOPs.

Surveys performed on a weekly basis include swipe surveys, air and water samples, and gamma radiation field surveys. Surface contamination in the room is determined by means of portable instruments and smear tests. Particular attention is given to the equipment pit, experimental areas and the irradiated fuel storage pits during each survey. Periodic surveys by health physics personnel are performed to check for leakage around beam plugs and through the stacked-block reactor shield; periodic air samples are also taken and analyzed providing a check on the proper functioning of the continuous air monitoring (CAM) system which uses one or more air particulate detectors. The coolant is checked by evaporating a sample to dryness and counting with a gas flow proportional or equivalent counter.

There is an ongoing program by the Radiation Control Office and the UFTR facility staff to monitor radiation levels outside the UFTR building in the nearby vicinity. This program is presented in Section 11.1.7.

11.1.4.5 Process and Effluent Radiological Monitoring and Sampling Systems

There are two normal effluent channels connected with operation of the UFTR: radioactive effluents from the Waste Water Holdup System and gaseous effluents from the UFTR Core Vent System. Both effluents are monitored; the UFTR Stack Monitoring System is normally in **continuous** operation and is required for normal reactor operations. In addition to these two effluents, the secondary coolant discharge is monitored (through a sample tank) to assure that no primary-to-secondary coolant leaks exist.

11.1.4.5.1 Effluent Channel 1 - Waste Water Holdup Tank

The first ordinary effluent channel for the UFTR consists of Waste Water Holdup Tank through which liquid "waste" is periodically released when the tank contains a

sufficient quantity of water to warrant sampling, analysis and release. Before 1999 the effluents were released to two underground tanks that where pumped approximately 1 - 6 times per year. These tanks held up not only liquid effluents from the UFTR building complex but also from laboratories within the adjacent Nuclear Science Center. On May 19, 2000 these underground tanks were deactivated and replaced by an aboveground 1,000 gallon-tank, which holds up only UFTR liquid effluents. The UFTR normally releases to the waste water holdup tank approximately 1,500 milliliters of primary coolant per week due to waste from primary sampling plus condensed water from the air conditioning system which varies with weather conditions. Only liquids meeting the requirements set by the Radiation Control Office based on acceptable activity levels are released into the University of Florida Sanitary Sewage System through Channel 1. These releases occur at irregularly spaced intervals, usually about 2 - 6 times per year.

Waste water is sampled and monitored prior to tank discharge. No isotopic analysis is required if the estimated average release is less than 25% of the concentration limit allowed in 10 CFR 20, Appendix B, Table 2. If the activity in the waste water holdup tank is above acceptable levels for discharge, the contents would be drummed and stored as low-level waste until the activity decayed sufficiently to permit safe shipment or until sufficient quantity is accumulated to warrant pickup and ultimate disposal by an NRC-approved disposal agency. Otherwise, when the samples demonstrate acceptable activity levels for release, the liquid in the tank in question is released into the sanitary sewage system. UFTR Standard Operating Procedure SOP-D.7 [6]establishes standard protocol for the circulation, sampling, analysis, and discharge of the waste water contained in the waste water holdup tank.

A summary of the liquid waste releases from the UFTR Waste Water Holdup Tank is presented in Table 11-3 for all reporting periods (years) since the UFTR first reached full rated power in October, 1971, following re-licensing and system modifications up to August, 1988. As noted in Table 11-3, until May, 2000 the liquid effluent discharged into the holding tanks came from approximately twenty laboratories within the adjacent Nuclear Sciences Center as well as from the UFTR building. These sources account for the large volumes recorded in Table 11-3 for some years since UFTR releases are relatively constant. The maximum activity in any release for each reporting period (year) is also recorded in Table 11-3 to demonstrate the low level of these releases. Following release and combination with the usual multi-million gallons per day sanitary sewage flow, the activity level is several orders of magnitude below the limits for activity release established by 10 CFR 20, Appendix B.

11.1.4.5.2 Effluent Channel 2 - UFTR Building Stack

The second ordinary effluent channel consists of the stack leading from the Core Vent System depicted in Chapter 9, Figures 9-1and 9-2.

Because the air within the UFTR shield contains the isotope Argon-40 which undergoes neutron absorption to radioactive Argon-41, the Core Vent System assures that

air is pumped away from the reactor cell through the shield and then out the UFTR building stack.

Table 11-4 contains a summary of gaseous Argon-41 effluents released to the environment from the reactor building stack. This summary is presented for all reporting years after the UFTR was relicensed and reached its current rated 100 kWth power level following system modifications through August, 1988, as abstracted from the UFTR Yearly Activity Reports. Data presented include yearly releases of Argon-41 (curies) as well as the maximum monthly recorded Argon-41 concentrations prior to atmospheric dilution (μCi/ml) (Column 3) and after 200 to 1 atmospheric dilution (μCi/ml) (Column 4). Since the current maximum effluent concentration limit allowed by 10 CFR 20, Appendix B for release to an uncontrolled area is 1.0×10^{-8} μCi/ml, the releases after incorporating the NRC authorized atmospheric dilution ratio of 200 to 1 are shown to meet this requirement.

11.1.4.5.3 Monitoring Channel 3 - Secondary Loop Sample Tank

The third possible effluent channel would consist of leakage from the primary loop to the secondary loop. A 100 ml sample of secondary coolant is taken weekly from a sample tank that collects a representative amount of the secondary coolant discharge (3 gallons per 40-hour week when the secondary coolant has been running during the week but no sample if the secondary has not been run during the previous week). These samples are evaporated and counted for detectable Alpha and Beta contamination. Excess samples are poured into the Condensate Tank and planchettes used for holding the evaporated samples are disposed of in contaminated waste if necessary. To date no leakage has been indicated and based on the safety limits imposed on the UFTR design, none is expected. Therefore, although this secondary loop is a monitored effluent channel, there is essentially no release above background through this channel

11.1.5 Radiation Exposure Control and Dosimetry

The UFTR facility is of the modified Argonaut type, designed to minimize radiation exposure to all individuals. Since the reactor is used as a teaching tool and for research operations, a more stringent safety program has been developed to insure radiation exposures meet the ALARA criterion; UFTR Standard Operating Procedures (SOP's) [6] are designed to facilitate the minimization of exposure rates and to insure the health and safety of the people in and around the facility.

To ensure occupational radiation exposures are ALARA, the control console is located at an adequate distance from the reactor and isolated from the rest of the reactor cell by a plexiglass wall enclosure which allows good visibility of the reactor cell during operations. No exposure facilities (beam ports) face in the direction of the console. Samples can be changed easily in the beam ports with the reactor shut down. Whenever experimental requirements necessitate operation of the reactor with a shield plug

removed; for example, to extract a beam or insert some apparatus, strict health physics supervision is required. All such experiments are approved in advance by the Reactor Manager and the UFTR RSR Subcommittee if deemed necessary based on experiment class; in addition, adequate shielding must be provided as specified in the applicable procedures [6], to assure that the ALARA criterion and safety considerations are satisfied.

Whenever a proposed experiment indicates the need for extraction of a beam from an open port, the associated radiation levels are estimated prior to conducting the experiment. Adequate shielding is then constructed and placed in position while radiation monitoring is required for the experiment itself. Areas around such experiments may also be roped off and posted whenever deemed necessary to minimize the radiation exposure of all personnel in the facility.

All samples activated in the reactor are removed as specified in applicable procedures [6]. Additional shielding in the form of lead bricks and concrete blocks is available for any activated sources removed from the exposure facilities. In addition, a hot cave with remote handling facilities is available in the radiochemistry laboratory outside the reactor cell on the first floor of the UFTR building in the event it is needed.

11.1.5.1 Dosimetry

As discussed in Section 11.1.2.3.1.1, surveys have shown that exposure levels associated with UFTR operation at the rated 100 kWth level are within the required limits. As indicated in that section the radiation levels encountered during normal operation of the UFTR are low.

Radioactive effluents, excluding Ar-41, are essentially nonexistent at the 100 kWth rated power levels (preliminary calculations indicate that the same situation would hold for operation at levels even up to 500 kWth). The Ar-41 generation has been discussed in Section 11.2.2

In general, the determination of dose levels expected to be received by the UFTR personnel, faculty and students working with the facility, and to the general public depends on the location of the person in question and the length of time the person spends in the area of the reactor. Radiation levels measured around the reactor at 100 kWth are indicated on the UFTR reactor cell sketch presented in Figure 11-4.

11.1.5.1.1 Dose Model for Gaseous Effluents

The Dose Model used for this Safety Analysis Report follows the approach outlined in Regulatory Guide 1.109 entitled, "Calculation of Annual Doses to Man from Routine Releases of Reactor Effluents for the Purpose of Evaluating Compliance with 10 CFR 50 Appendix I". Since the only significant gaseous release from the UFTR during normal operations is Argon-41, the GASPAR code [7] was used to calculate the doses from the

routine releases assuming Ar-41 to be the only radioisotope released. Two different kinds of calculations were performed:

1. Dose to the hypothetically most exposed individual including highest gamma and beta air dose, and

2. Dose to the population.

11.1.5.1.1.1 Methodology for Calculating Maximum Individual and Air Doses

For dose calculations from a ground release, which is practically the case for the 30 foot UFTR stack, the semi-infinite cloud model is utilized. The applicable equation is derived based on the assumption that the energy generated from the decay of the radioisotopes in the air per unit mass is equal to the energy absorbed per unit mass (absorbed dose). To make the geometrical correction for the fact that a person standing on the ground is irradiated only from the air in 2π geometry, the expression is multiplied by 0.5 for the gamma dose.

The radioactive concentration of a vent-released radionuclide at a point x in pCi/m^3 according to the definition of the diffusion coefficient is:

$$\chi_{41}(x) = \kappa \cdot Q_{41} \cdot \chi / Q(x) \qquad \textbf{Equation 11-1}$$

where

κ	=	units conversion factor (3.17 x 10^4 pCi-yr/Ci-sec)
$\chi_{41}(x)$	=	concentration of Ar-41 at position x (pCi/m^3)
Q_{41}	=	annual release of Ar-41 (Ci)
$\chi/Q(x)$	=	diffusion coefficient at distance x (sec/ m^3)
x	=	downwind distance from release point (m)

The corresponding annual gamma and beta air doses as a function of downwind distance are then given by the following two equations:

$$D_{41}^{\sigma}(x) = DF_{41}^{\sigma} \cdot \chi_{41}(x) \qquad \textbf{Equation 11-2}$$

$$D_{41}^{\beta}(x) = DF_{41}^{\beta} \cdot \chi_{41}(x) \qquad \textbf{Equation 11-3}$$

where

$DF_{41}^{\sigma}(x)$ = gamma dose conversion factor for Ar-41 (9.30 x 10^{-3} mrad-m^3/pCi-yr) [8]

$DF_{41}^{\beta}(x)$ = beta dose conversion factor for Ar-41 (2.69 x 10^{-3} mrad-m^3/pCi-yr) [8]

$D_{41}^{\sigma}(x)$ = annual gamma air dose from Ar-41 (mrad/yr)

$D_{41}^{\beta}(x)$ = annual beta air dose from Ar-41 (mrad/yr)

The annual total body dose and the annual skin dose to an individual in the vicinity of the UFTR during normal operations in then calculated by using the following equations:

$$_{\infty}D_{41}^{T}(x) = S_F \cdot \chi_{41}(x) \cdot DFB_{41} \qquad \textbf{Equation 11-4}$$

$$_{\infty}D_{41}^{S}(x) = 1.11 S_F \cdot \chi_{41}(x) \cdot DF_{41}^{\alpha} + \chi_{41}(x) \cdot DFS_{41} \qquad \textbf{Equation 11-5}$$

where

$_{\infty}D_{41}^{T}(x)$ = annual total body dose from Ar-41 (mrem/yr)

S_F = shielding factor due to the walls of the house where the individual lives;0.7 is assumed based on recommendations from Reference [8]

DFB_{41} = dose conversion factor for total body dose from Ar-41 (8.84×10^{-3}mrem-m^3/pCi-yr)

$_{\infty}D_{41}^{S}(x)$ = Annual skin dose from Ar-41 (mrem/yr)

DFS_{41} = Beta skin dose conversion for Ar-41 (2.69×10^{-3} mrem-m^3/pCi-yr)

11.1.5.1.1.2 <u>Population Dose Methodology.</u>

For the population dose calculations, the surrounding area of the reactor is divided into subregions. The average dose to an individual present in each subregion is calculated for each of the organs, using the average diffusion coefficient for that subregion. The average dose to an individual is then multiplied by the total population living in the subregion. The total population dose is calculated by adding the population dose in every subregion. The resulting equation for the total population dose to an organ is given by:

$$D_j^p = 0.001 \sum_j P_d D_{jd} \qquad \textbf{Equation 11-6}$$

where

D_j^p = total population dose to organ "j" (manrem/yr)

P_d = population in subregion d

D_{jd} = dose to organ "j" of an individual living in the center of subregion d (mrem/yr)

11.1.5.1.2 Analysis of Past Effluent Releases from the UFTR

As indicated in Section 11.1.1.1 and Section 11.1.4.5.2 the only radioisotope released in significant amounts from the UFTR is Ar-41. Since it is generated by activation of Ar-40 contained in the air used in ventilation of the Reactor Cell and dissolved in the primary coolant, the release is essentially proportional to the annual total energy generated. The total generated energy (kW-h) from September 1, 1972 up to August 31, 2001 as presented in Table 11-1 and the corresponding measured Ar-41 releases during the yearly reporting periods as presented in Table 11-4 are listed in Table 11-5. During the last eleven-year period summarized by Table 11-5, the total energy generated by the UFTR was 224.17 MW-h, and the average energy generated per year was 22.42 MW-h with the correspondent average yearly release of Ar-41 of 79.95 Ci.

Completely reliable data for Ar-41 releases is available only from 1976. In addition, the releases recorded in the two year period from September, 1976 to August, 1978 are relatively high compared to other reporting periods. For the two year period from September, 1976 to August, 1978, the yearly average release was 121.4 Ci. The average release per unit energy generated was 4.69 Ci/MW-h based on these two years of release data. Since the facility design was not altered substantially during the period of interest here, this average release per energy generated (4.69 Ci/Mw-H) was extrapolated to apply for the 30 years listed in Table 11-5. This value along with the average energy generated per year were combined to yield a very conservative value of 109.4 Ci/yr as the average yearly release of Ar-41 for the period September,1972 to August, 2001. This value is very conservative versus the averaged 81.92 Ci of Ar-41 released for the 30 reporting years since August, 1972 as reported in Table 11-5. The value of 109.4 Ci/yr is the release selected for subsequent dose calculations.

11.1.5.1.3 Population Distribution Around the UFTR.

As indicated in Section 2.1.3.6 of this Safety Analysis Report, the population distribution around the UFTR for these dose calculations was obtained from the U.S. Census Bureau, Census 2000 Redistricting Data (Public Law 94-171) Summary File, Matrices PL1 and PL2, which consists essentially of population data based per tract [9]. The urban area of Gainesville extends further than 5 miles from the UFTR, but the greater Gainesville population was conservatively assumed to be concentrated within a 5 mile radius around the UFTR. Table 2-1 and Figure 2-5 show the population distribution for each sector of the compass for circles with radii at 1 and 5 miles. The most significant changes to the Gainesville area population after 1980 have occurred in the "suburbs", outside the 5 mile area. Figure 2-5 is repeated here as Figure 11-9 for convenience.

11.1.5.1.3.1 Results of Dose Calculations.

A-) Individual Dose Results

Two computer calculations were performed using the releases corresponding to the total 1978 release and the average yearly release for the period from September 1972 to August 1978. The points selected in both cases correspond to the two locations with the highest diffusion coefficients as noted from Figure 2-20 showing the annual average isopleths around the UFTR with Gainesville data repeated here as Figure 11-10 for convenience, and from Figure 2-23 showing the annual average χ/Q values at special locations around the UFTR with Gainesville data repeated here as 11-11 for convenience.

The results calculated for the beta and gamma air doses, the whole body doses and the skin doses for both locations and both releases are presented in Table 11.6.

B-) Population Dose Results

In calculating the population dose during normal operations of the UFTR, two cases were again considered. Case I corresponds to the total 1978 release and Case II corresponds to the calculated conservative average yearly release from September, 1972 to August 31, 1978. Because Argon is a noble gas, the only pathway which results in significant doses is direct irradiation. The results for the integrated yearly population dose for the UFTR are shown in Table 11-7

11.1.5.1.3.2 Assessment of Dose Results for Normal UFTR Operation.

Appendix I to 10 CFR 50 and the Regulatory Guides 1.109 [8] and 1.111 [10]are intended to state, clarify, and quantify the design objectives for commercial Nuclear Power Stations from the standpoint of their radiological impact in normal operations. In the evaluation of Appendix I for these stations, the highest exposed individual is assumed to be located outside the site boundary. The site boundary of Nuclear Power Stations varies with each plant, but a value of 0.5 miles can be considered typical. This distance is five times the chosen distance from the UFTR vent to the hypothetically most exposed individual.

Because of the difference in site boundaries between the UFTR and typical power reactors, the conditions assumed for the evaluation of the radiological impact in normal operations for commercial Nuclear Power Stations are very different from the assumptions used in this work. However, in the absence of any applicable regulation for the radiological impact in normal operations for Test and Research Reactors, the comparison of the Appendix I Design Objectives for Gaseous Effluents with the actual doses calculated for the UFTR in normal operations from the Ar-41 releases for the highest exposed individual, is shown in Table 11.8. In general, the doses for the most exposed individual around the UFTR are much below those for a typical power reactor. The population dose results for the UFTR are comparable to the dose resulting from commercial Nuclear Power Stations because, although the average individual doses are

much smaller for the UFTR, the population concentration around the reactor is much larger than for a typical commercial Nuclear Power Station [11].

11.1.6 Contamination Control

Radioactive contamination is controlled at the UFTR by using standard operating procedures and radiation control techniques for radioactive contamination monitoring along with proper work methods. Routine radiation monitoring to detect and identify contamination in the UFTR is described in Section 11.1.4.1 and 11.1.4.4. The following items are part of UFTR procedures to control contamination:

- Personnel are required to monitor their hands and feet for contamination when leaving contaminated areas or restricted areas that are likely contaminated.
- All personnel entering the reactor cell are required to utilize the portal monitor or hand-held frisker to check for potential contamination upon leaving the reactor cell.
- Materials, tools and equipments are surveyed for contamination before removal from contaminated areas or restricted areas where contamination is likely.
- Contaminated areas and restricted areas where contamination is likely are surveyed routinely for contamination levels.
- Potential contaminated areas are periodically monitored, consistent with the nature and quantity of the radioactive materials present.
- Radiation Work Permits (RWPs) are required to assure proper radiological protective measures are available and used during work which has actual or potential radiological hazard with its accomplishment and to provide appropriate documentation of the radiation control measures.
- Anti-contamination clothing designed to protect personnel against contamination is used and specified in the RWPs when recommended or required by work conditions.
- Contamination events are documented in reports. These reports are maintained by the University of Florida Radiation Control and Radiological Services and are retained for the life of the facility.
- Staff and visitors are trained on the risks of contamination and on the techniques for avoiding, limiting and controlling contaminations commensurate with their risk. Visitors are given dosimeters and supervised during all times they are in the reactor cell.

11.1.7 Environmental Monitoring

The UFTR Environmental Radiological Program is conducted to ensure that the radiological environmental impact of reactor operations is as low as reasonably achievable (ALARA); it is conducted in addition to the radiation monitoring and effluents control. This program is conducted by the UFTR facility staff under the supervision of

the Radiation Control Office, to monitor radiation levels outside the UFTR restricted area.

Monitoring is conducted outside the restricted area by measuring the gamma doses at selected fixed locations, with acceptable personnel monitoring devices. These radiation monitoring devices are placed outdoors in the nearby vicinity of the UFTR building and are also placed indoors at different locations in the Nuclear Science Center, UFTR building unrestricted areas and UFTR annex.

Typical locations for such devices are marked on the sketch of the UFTR building and immediate vicinity presented in Figure 11-12. The Luxel, TLDs or other radiation monitoring devices are collected by the UFTR staff or Radiation Control personnel and evaluated monthly by a NVLAP-certified processor.

Typically these radiation monitoring devices show no significant indications above background for the UFTR site. Therefore, Ar-41 discharges from the UFTR stack are not considered to present a danger to the general public.

Once in a year the Radiation Control Office runs the EPA COMPLY code to calculate radiation dose to a non-occupational maximally exposed individual from airborne radioactivity releases at UFTR and at other University of Florida units in order to verify that the individual member of the public likely to receive the highest dose will not be expected to receive a total effective dose equivalent in excess of 10 mrem per year from these emissions as established in 10 CFR 20 Section 20.1101 (d).

11.2 Radioactive Waste Management

The UFTR is a low power research reactor and generates very small amounts of radioactive waste, as previously presented in Section 11.1.1.

11.2.1 Radioactive Waste Management Program

11.2.2 Radioactive Waste Controls

11.2.2.1 Gaseous Waste Management

Precautions are taken to insure that no radioactivity is above established limiting levels when released to the environment. Radioactive Argon-41 and Nitrogen-16 are produced in the UFTR. Argon-41 is produced as a result of neutron activation of air containing approximately 1% Argon-40 drawn through crevices in the concrete and graphite shielding while Nitrogen-16 is produced from oxygen activation (0-16 in water). Leakage of these activated gases into the reactor cell is prevented by drawing air from the cell, through the reactor and out the exhaust stack by the core vent described in Chapter 9. Thus, the negative pressure maintained in the shield volume assures air flow to the

Core Vent System from the reactor cell. Air from the core is drawn by the core vent and exhaust system, passed through a rough and absolute filter, and discharged through the 30 foot stack where it is diluted with approximately 10,000 c.f.m, of outside air (minimum) before it is released to the atmosphere. Whenever the reactor vent system is operating, air drawn from this system is continuously monitored for gross concentration of radioactive gases and recorded in the control room. Upon failure of the air monitoring system, the reactor vent system is secured. If the activity level reaches 4,000 cps, the monitor will actuate a warning light and an audible alarm in the reactor control room. As part of the reactor safety system, any loss of power to the reactor vent or dilution system will cause a reactor trip.

As indicated in Section 11.1.1.1, studies conducted by the UFTR staff in June and July of 1977 showed an average Argon-41 concentration at the stack discharge of 2.48 x 10^{-5} μCi/ml which with the authorized 200/1 atmospheric dilution became 1.24 x 10^{-7} μCi/ml which is 12.4 times the effluent concentration limit [4] . Current concentration measurements indicate a somewhat average Argon-41 concentration as showed in Table 11-4. The current UFTR Environmental Impact Appraisal limits the UFTR to 235 full power hours per month. In order to comply with 10 CFR 20 limits on Argon-41 a lower limit on energy is established based on the Argon-41 stack concentration measurements performed twice per year at intervals not to exceed 8 months with periodic improvements in the methodology used; when a lower limit on energy generation is indicated, the lower limit is controlling for UFTR operations. This restriction will be enforced until changes are made in the Core Vent System and new Argon-41 release data is obtained and analyzed to show no need of the restriction. As indicated by the UFTR energy generation data in Table 11-1 and Table 11-9, this restriction is not expected to present problems. A continuous environmental monitoring system (using Luxel badges, and/or thermoluminescent dosimeters) is maintained by the UFTR in areas adjacent to the UFTR complex. Since exposures typically indicate low doses (approximately background), radioactivity releases from the UFTR facility are not considered to impact the public.

11.2.2.2 Liquid Waste Management

All liquid waste from the UFTR is drained to a 150 gallon or other condensate tank in the Northwest corner of the reactor cell. Periodically the water held up in the condensate tank is pumped to the outside aboveground Waste Water Holdup Tank, sized to hold 1,000 gallons of liquid and located outside the reactor building in a fenced area. Approximately ninety percent of the water held up in the tanks comes from the air conditioning system and 10% comes from sampling water collected from the primary system, shielding tank, secondary heat exchanger and secondary sampling system. Because the amount of air conditioning system condensate varies greatly with weather conditions, this ratio also varies greatly. Periodic samples of the collected liquid waste are taken by the reactor staff and assayed to determine the total activity level present. If, as expected, activity levels are within acceptable levels for release, then the contents of the tank are released into the University of Florida Sanitary Sewage System where the released water is further diluted by an average flow of approximately 2.2 - 2.5 million

gallons per day. The liquid wastes do not present any problems during operation of the UFTR.

Acceptable activity levels for release from the waste water holdup tank have been established by the Radiation Control Office. Based on an average (March, 1982) daily flow of 2.2 - 2.5 million gallons of sanitary sewage, not more than 1/1000 of the maximum amount of radioisotopes specified by 10 CFR 20, Appendix B, should be released to the University of Florida sanitary sewage system in any one day.

UFTR Standard Operating Procedure D.7 [5] establishes standard protocol for the circulation, sampling, analysis and discharge of wastewater contained in the UFTR 1,000 gallon Waste water Holdup tank to assure releases to the sanitary sewer are within the limits set forth by the 10 CFR 20 "Standards for Protection Against Radiation", Florida Department of Health, Bureau of Radiation Control, "Control of Radiation Hazard regulations", and the University of Florida's "Radiation Control Guide".

Any liquid waste which must be shipped from the UFTR facility will be placed in appropriate containers and will be properly labeled according to Radiation Control Technique #3, "Instructions for Disposal of Radioactive Waste" [12]. As necessary, the containers will be stored on-site until the activity has decayed sufficiently to permit safe shipment and until sufficient quantity is accumulated to warrant pickup and ultimate disposal by an NRC-approved disposal agency.

11.2.2.3 Solid Waste

Solid waste is generated at the UFTR from irradiated samples, packaging materials, contaminated gloves and clothing, used primary coolant demineralizer resin heads, filter traps on the waste water holdup tank and other similar sources. All solid wastes are collected in accordance with Radiation Control Technique #3, "Instructions for Disposal of Radioactive Waste"[12]. These wastes are expected to be low-level and less radioactive than wastes already generated on campus by research efforts in other disciplines within the Health Science Center or the Veterinary Medicine and Agricultural Sciences Department. Normally, only solids will be shipped from the UFTR site.

11.2.3 Release of Radioactive Waste

The UFTR releases Ar-41 in the ventilation exhaust as a monitored radioactive effluent. Details relating to the release and potential impact of Ar-41 have been presented in Sections 11.1.1.1, 11.1.4.5.2 and. 11.2.2.1. Aside from this radionuclide, the UFTR does not plan any controlled release of radioactivity to the environment.

Table 11-1 History of UFTR energy generation since reaching the licensed 100 kWth power level following system modifications in 1970*

Reporting Period	kW-h Generated	Hours at Full Power
Sept. 1, 1971 – Aug. 31, 1972	29,873.67	Not abstracted
Sept. 1, 1972 – Aug. 31, 1973	23,039.54	Not abstracted
Sept. 1, 1974 – Aug. 31, 1974	8,904.37	78.8
Sept. 1, 1974– Aug. 31, 1975	48,835.15	425.18
Sept. 1, 1975 – Aug. 31, 1976	12,388.62	116.74
Sept. 1, 1976 – Aug. 31, 1977	25,388.14	243.67
Sept. 1, 1977 – Aug. 31, 1978	26,375.80	248.02
Sept. 1, 1978 – Aug. 31, 1979	9,079.30	84.85
Sept. 1, 1979 – Aug. 31, 1980	9,800.14	90.97
Sept. 1, 1980 – Aug. 31, 1981	15,200.63	138.88
Sept. 1, 1981 – Aug. 31, 1982	8.438.50	77.30
Sept. 1, 1982 – Aug. 31, 1983	14,479.80	136.50
Sept. 1, 1983 – Aug. 31, 1984	47,287.42	458.17
Sept. 1, 1984– Aug. 31, 1985	35,878.93	345.69
Sept. 1, 1985 – Aug. 31, 1986	19,287.74	186.48
Sept. 1, 1986 – Aug. 31, 1987	29,748.73	280.77
Sept. 1, 1987 – Aug. 31, 1988	26,676.61	250.38
Sept. 1, 1988 – Aug. 31, 1989	35,198.20	325.18
Sept. 1, 1989 – Aug. 31, 1990	24,700.06	240.06
Sept. 1, 1990 – Aug. 31, 1991	17,519.12	196.21
Sept. 1, 1991 – Aug. 31, 1992	21,904.23	209.96
Sept. 1, 1992 – Aug. 31, 1993	33,942.56	330.38
Sept. 1, 1993 – Aug. 31, 1994	28,798.22	265.81
Sept. 1, 1994– Aug. 31, 1995	27,598.90	263.22
Sept. 1, 1995 – Aug. 31, 1996	21,346.83	197.21
Sept. 1, 1996 – Aug. 31, 1997	16,904.11	143.89
Sept. 1, 1997 – Aug. 31, 1998	11,615.24	105.77
Sept. 1, 1998 – Aug. 31,1999	3,428.54	21.6
Sept. 1, 1999 – Aug. 31,2000	19,386.79	189.25
Sept. 1, 2000 – Aug. 31,2001	21,743.89	203.81

* The licensed amendment to upgrade UFTR rated power to 100 kWth was granted in 1964. After a number of years operation, system repairs and modifications were made in 1970. Following these modifications, the UFTR first reached 100 kWth in 1971.

Table 11-2 Selected Properties of Argon.

Atmospheric Abundance (By Volume)	0.934%
Isotopic Abundance of Argon-40	99.6%
Argon-40 Activation Cross Section (n,γ)	0.66 barns
Activation Product	Argon-41
Product (Argon-41) Half-Life	109.34 minutes
Ar-41 Radiation Emissions	β_1 - 2491.6 KeV (0.830%) β_2 -1198.0 KeV (99.10%) γ_3 - 1294.0 KeV (99.10%)

Table 11-3 Summary of Liquid Waste Released from UFTR/Nuclear Sciences Complex* since reaching the licensed 100 kW power level following system modifications in 1970

Reporting Period	Volume Discharged to UF Campus sanitary Sewage System (Liters)	Maximum Activity in Any Release (μCi/ml)
Sept. 1, 1971 – Aug. 31, 1972	--	--
Sept. 1, 1972 – Aug. 31, 1973	66,000	1.20×10^{-7}
Sept. 1, 1974 – Aug. 31, 1974	412,600	2.10×10^{-7}
Sept. 1, 1974– Aug. 31, 1975	639,000	2.10×10^{-7}
Sept. 1, 1975 – Aug. 31, 1976	605,000	1.30×10^{-7}
Sept. 1, 1976 – Aug. 31, 1977	279,200	7.00×10^{-8}
Sept. 1, 1977 – Aug. 31, 1978	340,000	2.00×10^{-8}
Sept. 1, 1978 – Aug. 31, 1979	645,000	5.50×10^{-8}
Sept. 1, 1979 – Aug. 31, 1980	618,000	1.70×10^{-8}
Sept. 1, 1980 – Aug. 31, 1981	1,060,000	2.00×10^{-8}
Sept. 1, 1981 – Aug. 31, 1982	395,400	NDA
Sept. 1, 1982 – Aug. 31, 1983	310,600	9.68×10^{-8}
Sept. 1, 1983 – Aug. 31, 1984	105,900	1.04×10^{-7}
Sept. 1, 1984– Aug. 31, 1985	64,100	NDA
Sept. 1, 1985 – Aug. 31, 1986	73,950	1.30×10^{-8}
Sept. 1, 1986 – Aug. 31, 1987	64,050	1.22×10^{-7}
Sept. 1, 1987 – Aug. 31, 1988	617,280	5.10×10^{-8}
Sept. 1, 1988 – Aug. 31, 1989	305,700	3.03×10^{-8}
Sept. 1, 1989 – Aug. 31, 1990	319,970	1.18×10^{-8}
Sept. 1, 1990 – Aug. 31, 1991	320,000	4.32×10^{-9}
Sept. 1, 1991 – Aug. 31, 1992	84,400	NDA
Sept. 1, 1992 – Aug. 31, 1993	156,563	4.60×10^{-9}
Sept. 1, 1993 – Aug. 31, 1994	0	0
Sept. 1, 1994– Aug. 31, 1995	83,650	1.18×10^{-9}
Sept. 1, 1995 – Aug. 31, 1996	0	0
Sept. 1, 1996 – Aug. 31, 1997	0	0
Sept. 1, 1997 – Aug. 31, 1998	84,500	2.4×10^{-7}
Sept. 1, 1998 – Aug. 31,1999	85,700	4.0×10^{-8}
Sept. 1, 1999 – Aug. 31,2000	--	--
Sept. 1, 2000 – Aug. 31,2001	6,254	1.17×10^{-9}

* Until May 19,1999 the effluent discharged into the holding tanks came from laboratories within the adjacent Nuclear Sciences Center as well as UFTR Complex. Under 10 CFR 50.59 Evaluation and Determination Number 99-04, the underground tanks were taken off line in May 19, 1999 and replaced by an external aboveground 1,000-gallon holdup tank and an inside 150-gallon holdup tank (condensate tank). The first two such releases were made in the most recent reporting year.

Table 11-4 Summary of Routine Argon-41 Releases since Licensing to 100 kWth

Reporting Period	Argon-41 Released Ci	Maximum Monthly Concentration * μCi/ml	Maximum Concentration of Monthly Releases* * μCi/ml
Sept. 1, 1971 – Aug. 31, 1972	--	--	--
Sept. 1, 1972 – Aug. 31, 1973	9.6	8.3×10^{-7}	4.15×10^{-9}
Sept. 1, 1974 – Aug. 31, 1974	3.7	2.8×10^{-7}	1.4×10^{-9}
Sept. 1, 1974– Aug. 31, 1975	18.0	4.1×10^{-7}	2.0×10^{-9}
Sept. 1, 1975 – Aug. 31, 1976	5.03	1.7×10^{-7}	8.5×10^{-10}
Sept. 1, 1976 – Aug. 31, 1977	113.2	1.52×10^{-7}	7.58×10^{-9}
Sept. 1, 1977 – Aug. 31, 1978	129.53	1.97×10^{-7}	9.84×10^{-9}
Sept. 1, 1978 – Aug. 31, 1979	40.46	5.4×10^{-7}	2.7×10^{-9}
Sept. 1, 1979 – Aug. 31, 1980	42.39	7.0×10^{-7}	3.5×10^{-9}
Sept. 1, 1980 – Aug. 31, 1981	68.23	9.6×10^{-7}	4.8×10^{-9}
Sept. 1, 1981 – Aug. 31, 1982	58.32	7.92×10^{-7}	3.96×10^{-9}
Sept. 1, 1982 – Aug. 31, 1983	76.92	1.66×10^{-7}	8.31×10^{-9}
Sept. 1, 1983 – Aug. 31, 1984	228.6	3.74×10^{-7}	1.87×10^{-9}
Sept. 1, 1984– Aug. 31, 1985	142.2	1.79×10^{-7}	8.96×10^{-9}
Sept. 1, 1985 – Aug. 31, 1986	97.07	1.41×10^{-7}	7.05×10^{-9}
Sept. 1, 1986 – Aug. 31, 1987	153.10	1.24×10^{-7}	6.22×10^{-9}
Sept. 1, 1987 – Aug. 31, 1988	137.80	1.43×10^{-6}	7.15×10^{-9}
Sept. 1, 1988 – Aug. 31, 1989	140.14	1.49×10^{-6}	7.46×10^{-9}
Sept. 1, 1989 – Aug. 31, 1990	113.87	1.37×10^{-6}	6.85×10^{-9}
Sept. 1, 1990 – Aug. 31, 1991	69.08	1.66×10^{-6}	8.29×10^{-9}
Sept. 1, 1991 – Aug. 31, 1992	83.15	1.01×10^{-6}	5.04×10^{-9}
Sept. 1, 1992 – Aug. 31, 1993	128.51	0.85×10^{-7}	4.27×10^{-9}
Sept. 1, 1993 – Aug. 31, 1994	121.43	1.29×10^{-6}	6.45×10^{-9}
Sept. 1, 1994– Aug. 31, 1995	112.12	7.18×10^{-7}	3.59×10^{-9}
Sept. 1, 1995 – Aug. 31, 1996	84.66	8.30×10^{-7}	4.15×10^{-9}
Sept. 1, 1996 – Aug. 31, 1997	66.42	9.06×10^{-7}	4.53×10^{-9}
Sept. 1, 1997 – Aug. 31, 1998	36.54	5.52×10^{-7}	2.76×10^{-9}
Sept. 1, 1998 – Aug. 31,1999	13.67	6.28×10^{-7}	3.14×10^{-9}
Sept. 1, 1999 – Aug. 31,2000	74.54	7.00×10^{-7}	3.50×10^{-9}
Sept. 1, 2000 – Aug. 31,2001	89.29	9.4×10^{-7}	4.70×10^{-9}

* Effluent Concentration limit for an uncontrolled area is 1.0×10^{-8} μCi/ml (Appendix B, Table 2, 10 CFR 20).

** Reflects the Authorized Atmospheric Dilution Ratio of 200 to 1.

Table 11-5 Integrated History of UFTR ARGON-41 Releases

Reporting Period	Total Energy Generated MW-h	Argon-41 Released Ci	Ci/MW-h
Sept. 1, 1971 – Aug. 31, 1972	29.87	--	
Sept. 1, 1972 – Aug. 31, 1973	23.04	9.6	0.42
Sept. 1, 1974 – Aug. 31, 1974	8.90	3.7	0.42
Sept. 1, 1974– Aug. 31, 1975	48.84	18	0.37
Sept. 1, 1975 – Aug. 31, 1976	12.39	5.03	0.41
Sept. 1, 1976 – Aug. 31, 1977	25.39	113.2	4.46
Sept. 1, 1977 – Aug. 31, 1978	26.38	129.53	4.91
Sept. 1, 1978 – Aug. 31, 1979	9.08	40.46	4.46
Sept. 1, 1979 – Aug. 31, 1980	9.80	42.39	4.33
Total from Sept.1,1971 - Aug.31, 1980	**193.68**	**361.91**	**1.87**
Sept. 1, 1980 – Aug. 31, 1981	15.20	68.23	4.49
Sept. 1, 1981 – Aug. 31, 1982	8.44	58.32	6.91
Sept. 1, 1982 – Aug. 31, 1983	14.48	76.92	5.31
Sept. 1, 1983 – Aug. 31, 1984	47.29	228.6	4.83
Sept. 1, 1984– Aug. 31, 1985	35.88	142.2	3.96
Sept. 1, 1985 – Aug. 31, 1986	19.29	97.07	5.03
Sept. 1, 1986 – Aug. 31, 1987	29.75	153.1	5.15
Sept. 1, 1987 – Aug. 31, 1988	26.68	137.8	5.17
Sept. 1, 1988 – Aug. 31, 1989	35.20	140.14	3.98
Sept. 1, 1989 – Aug. 31, 1990	24.70	113.87	4.61
Total from Sept.1,1980 - Aug.31, 1990	**256.90**	**1216.25**	**4.73**
Sept. 1, 1990 – Aug. 31, 1991	17.52	69.08	3.94
Sept. 1, 1991 – Aug. 31, 1992	21.90	83.15	3.80
Sept. 1, 1992 – Aug. 31, 1993	33.94	128.51	3.79
Sept. 1, 1993 – Aug. 31, 1994	28.80	121.43	4.22
Sept. 1, 1994– Aug. 31, 1995	27.60	112.12	4.06
Sept. 1, 1995 – Aug. 31, 1996	21.35	84.66	3.97
Sept. 1, 1996 – Aug. 31, 1997	16.90	66.42	3.93
Sept. 1, 1997 – Aug. 31, 1998	11.62	36.54	3.15
Sept. 1, 1998 – Aug. 31,1999	3.43	13.67	3.99
Sept. 1, 1999 – Aug. 31,2000	19.39	74.54	3.84
Total from Sept.1,1980 - Aug.31, 2000	**202.44**	**790.12**	**3.90**
Sept. 1, 2000 – Aug. 31,2001	21.74	89.29	4.11

Table 11-6 Results of Individual Dose Calculations around the UFTR [7]

CASE*	X/Q (sec/m^3)	Ar-41 Release (Ci)	Beta Air Dose (mrad/yr)	Gamma Air Dose (mrad/yr)	Whole Body Dose (mrem/yr)	Skin Dose (mrem/yr)
Case IA: 1978 Release	7.3 E-05	129.5	0.983	2.79	1.85	2.97
Case IB: 1978 Release	6.9 E-05	129.5	0.929	2.63	1.75	2.81
Case IIA: 1972-1978 Annual Release	7.3 E-05	109.4	0.83	2.35	1.57	2.51
Case IIB: 1972-1978 Annual Release	6.9 E-05	109.4	0.785	2.23	1.48	2.37

* Cases IA and IIA corresponds to a point 0.10 miles West from UFTR, Cases IB and IIB correspond to a point 0.10 miles East from UFTR

Table 11-7 Integrated Yearly Population Dose for the UFTR*

CASE	Ar-41 Release (Ci)	Total Body Dose (personrem)	Total Skin Dose (personrem)
I **	129.5	0.715	1.27
II ***	109.4	0.604	1.07

* Corresponds to NEPA Annual Integrated Population Dose

** Corresponds to the total release for the September 1977 to August 1978 reporting year (taken into account for representing high Ar-41 releases).

*** Corresponds to conservatively averaged yearly release from September 1972 to August 1978.

Table 11-8 Dose Comparison between Appendix I Design Objectives and Calculated UFTR Results for the most Exposed Individual and Highest Air Doses

	Appendix I Design Objective	UFTR Highest Calculation
Gamma Dose in Air	10 mrad/yr	2.79 mrad/yr
Beta Dose in Air	20 mrad/yr	0.983 mrad/yr
Whole Body Dose	5 mrem/yr	1.85 mrem/yr
Skin Dose	15 mrem/yr	2.97 mrem/yr

Table 11-9 UFTR Average Undiluted Ar-41 Concentration and Effective Full Power Hours (EFPH)

Survey date	Average Undiluted Ar-41 Concentration (10^{-8} μCi/ml)	Monthly Limit on Energy Generation (EFPH)
April 2001	9.598	75.0156
August 2000	9.543	75.4480
January 2000	8.520	85.5070
July 1999	11.1937	64.3219
January 1998	6.773	106.3044
July 1997	6.982	103.1223
January 1997	8.504	84.6660
July 1996	7.671	93.8600
February 1996	8.930	80.6271
August 1995	8.003	89.9663

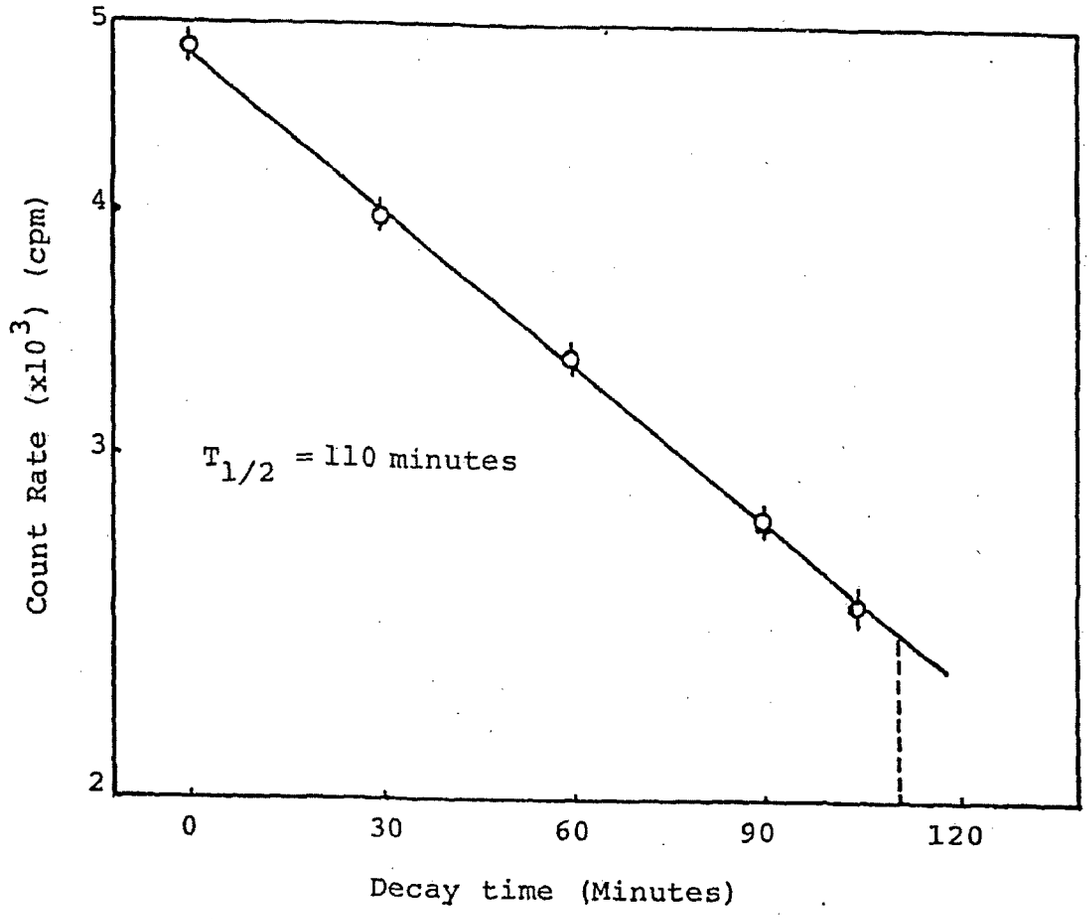

Figure 11-1 Data for Half-Life Determination of UFTR Stack Sample [3]

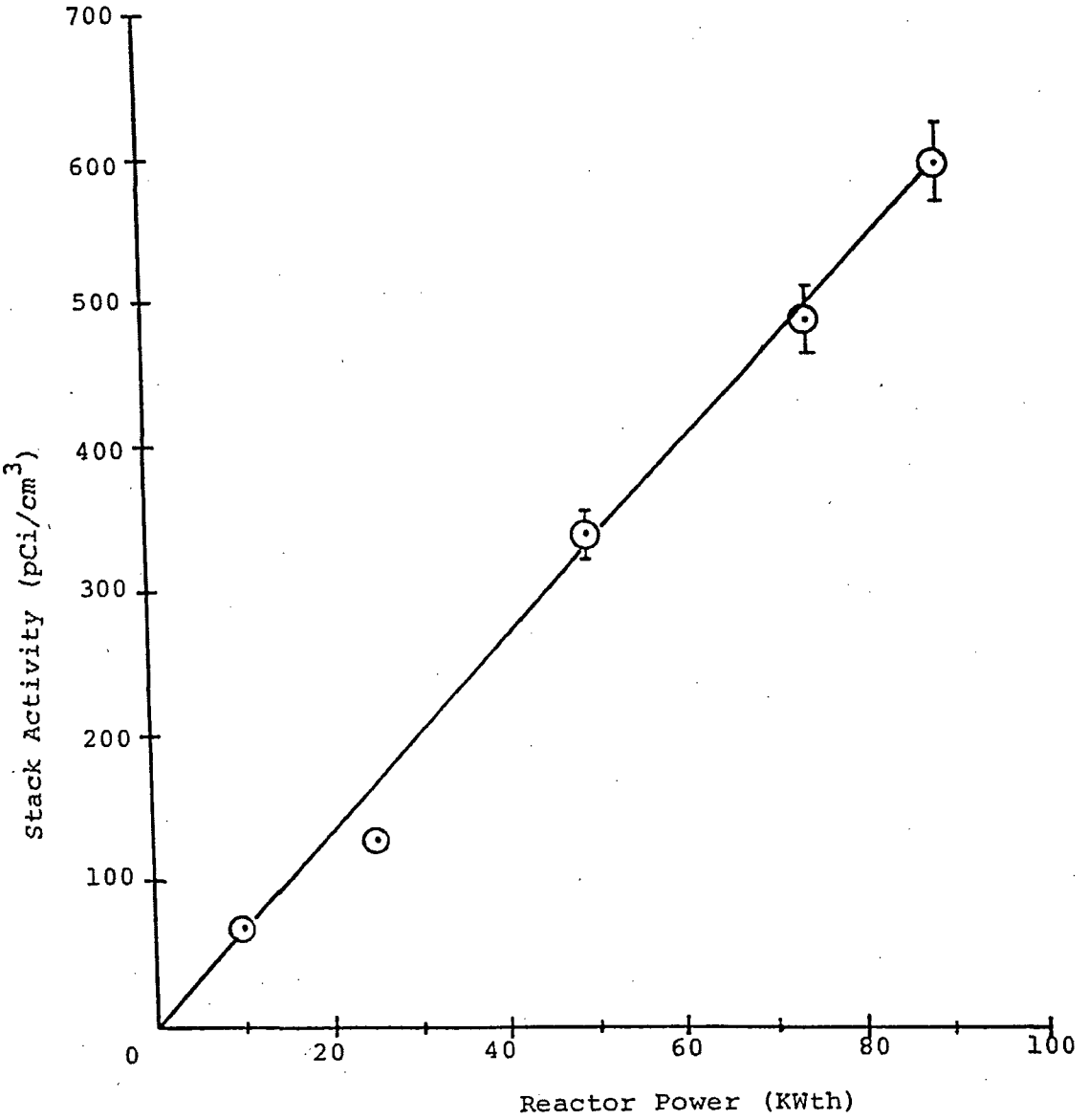

Figure 11-2 Experimental Determination of Argon41 Stack Concentration with UFTR Operating Power [3]

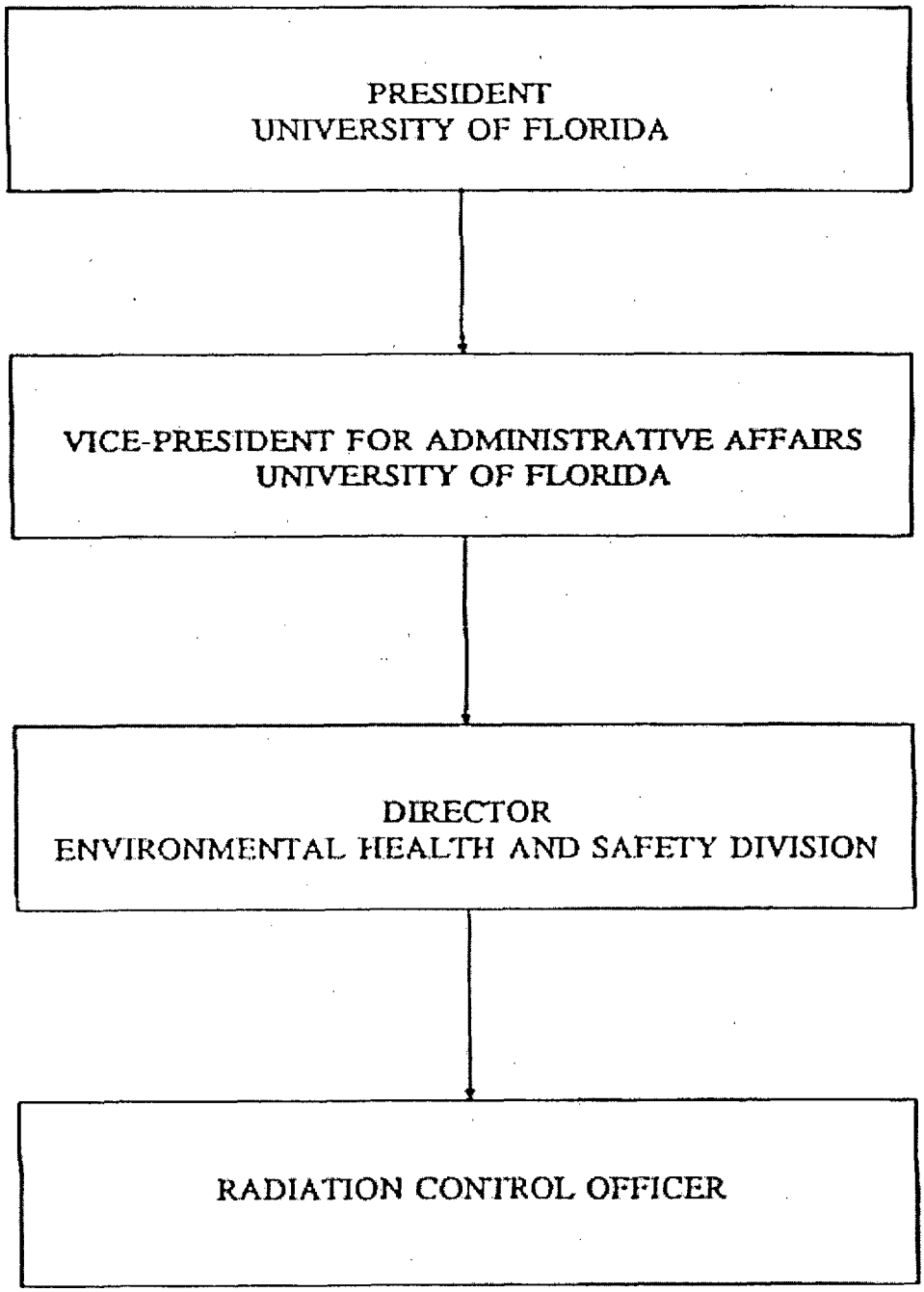

Figure 11-3 Line Responsibility Flow Diagram for the University of Florida Radiation Control and Radiological Services Department

[

]

Figure 11-4 Results of Radiation Survey around UFTR at 100 kWth Power Operation [1]

[

]

Figure 11-5 Gamma Exposure Rates at Port Level for 100kWth Operation with no external Shielding and Top Shield Block Removed [1]

[

]

Figure 11-6 Gamma Exposure Rates at Ground Level for 100kWth Operation with no External Shielding and Top Shield Block Removed [1].

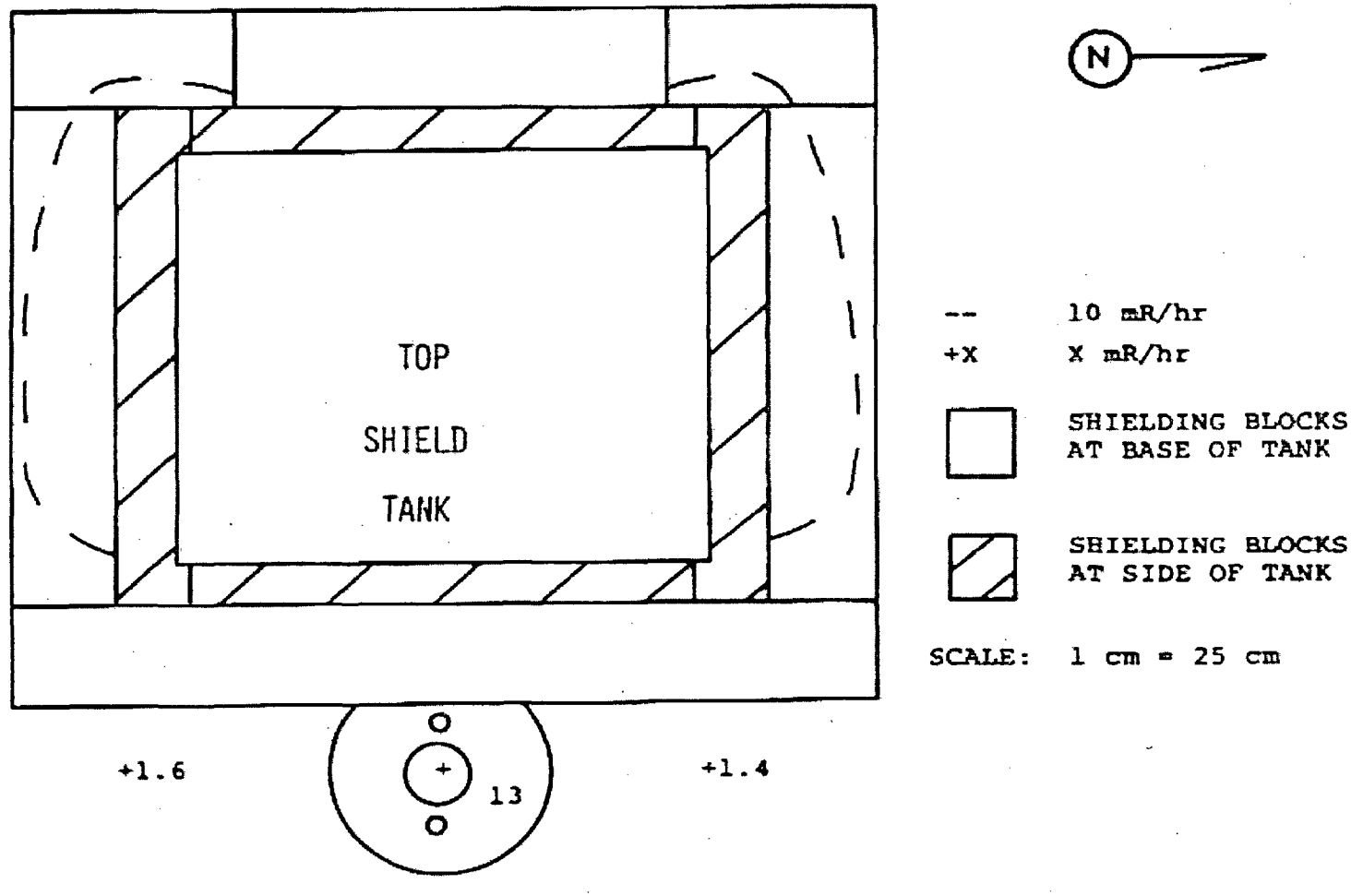

Figure 11-7 Gamma Exposure Rates around the UFTR Shield Tank for 100kWth Operation with Readings Made at the Top of Base Shielding (25 cm above reactor surface)[1].

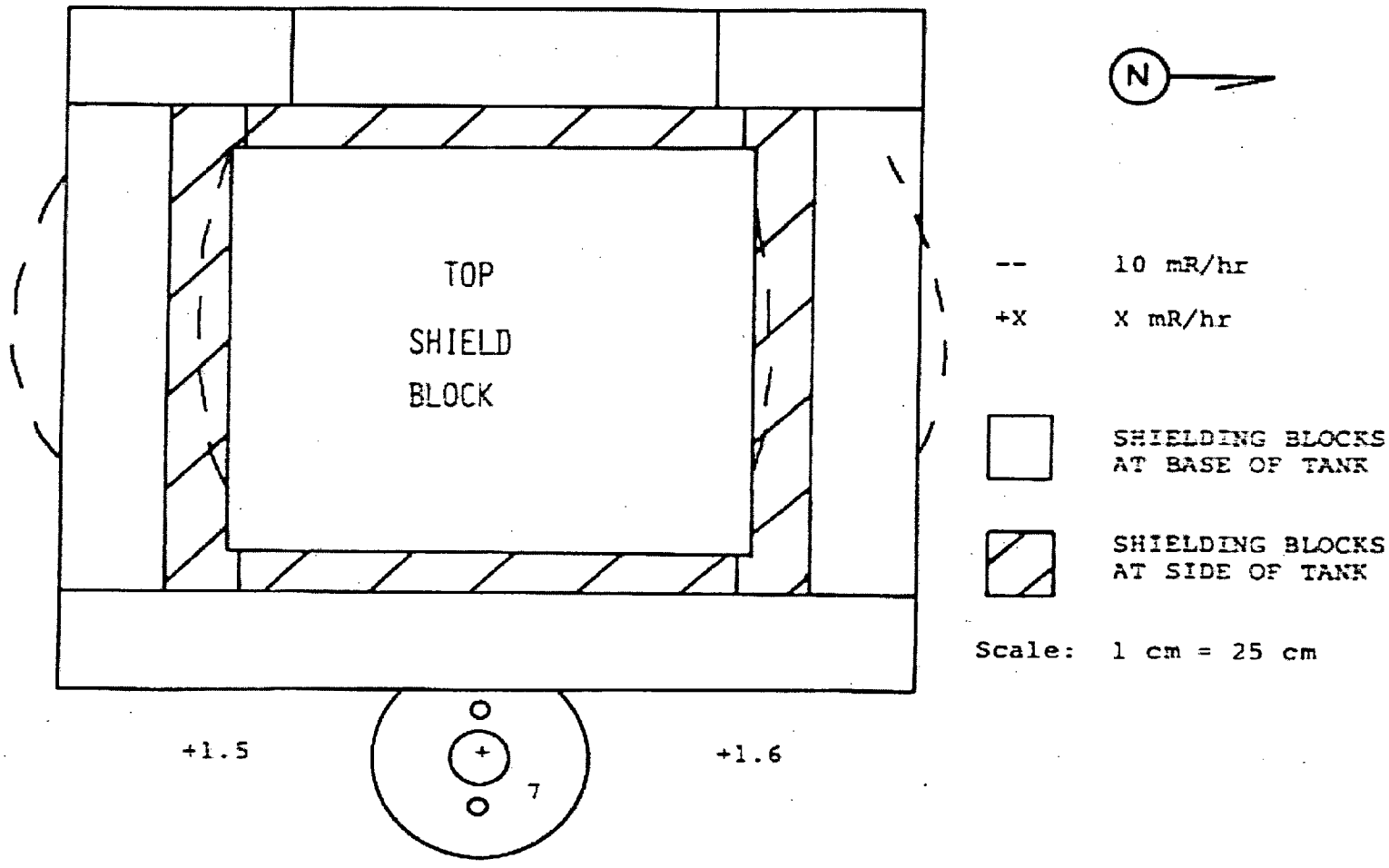

Figure 11-8 Gamma Exposure Rates around the UFTR Shield Tank for 100kWth Operation with Readings Made at the Top of Base Shielding (101 cm above reactor surface) [1].

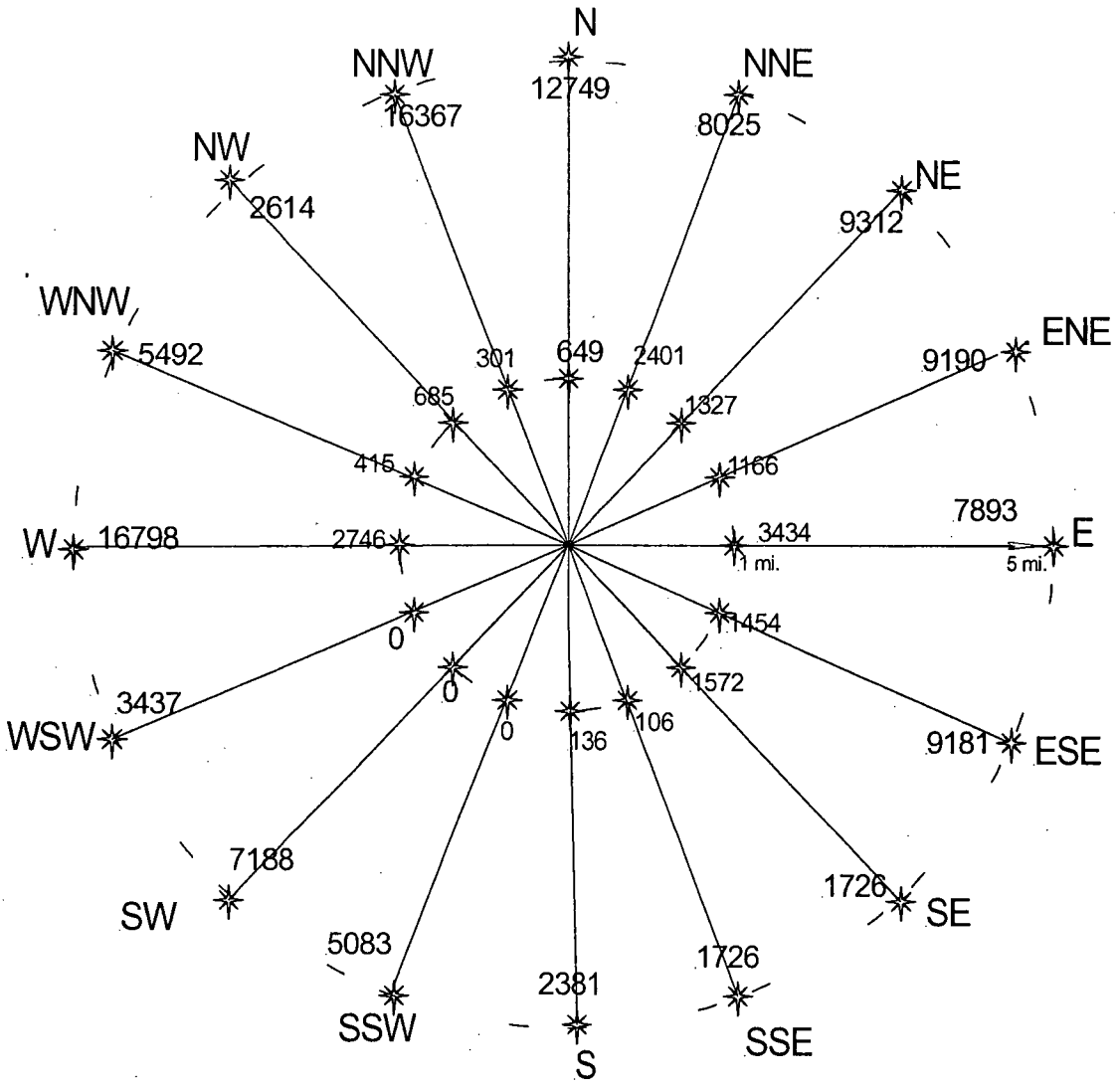

Figure 11-9 Population Distribution with a 1 mile and 5 miles radius around UFTR, based upon 2000 Census Data. The greater Gainesville population was conservatively assumed to be concentrated within a 5 mile radius around UFTR.

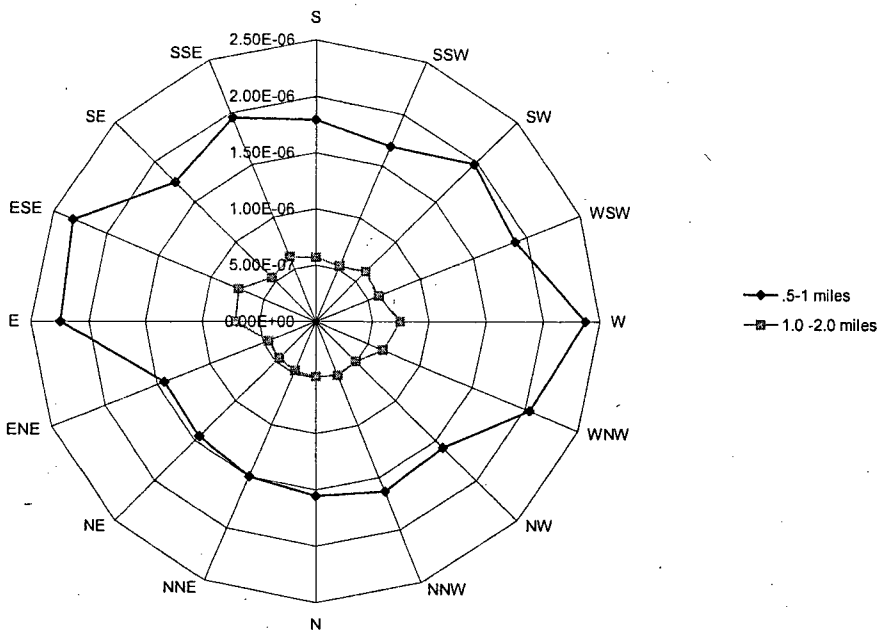

Figure 11-10 **Annual Average Isopleths Obtained with Gainesville Data.**

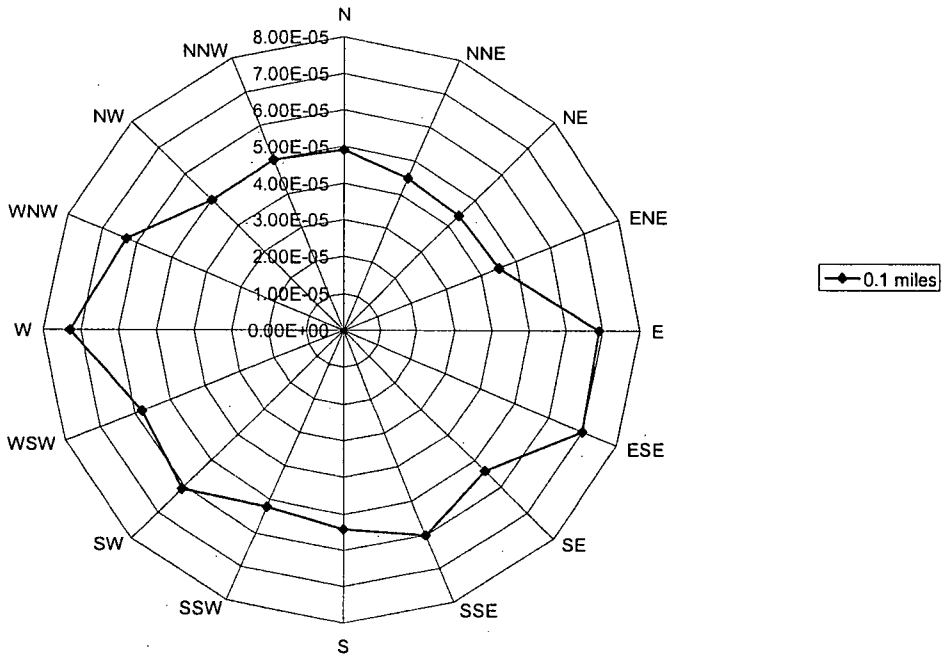

Figure 11-11 Directional Variation of Annual Average Diffusion Coefficients at 0.1 Mile Distance from UFTR

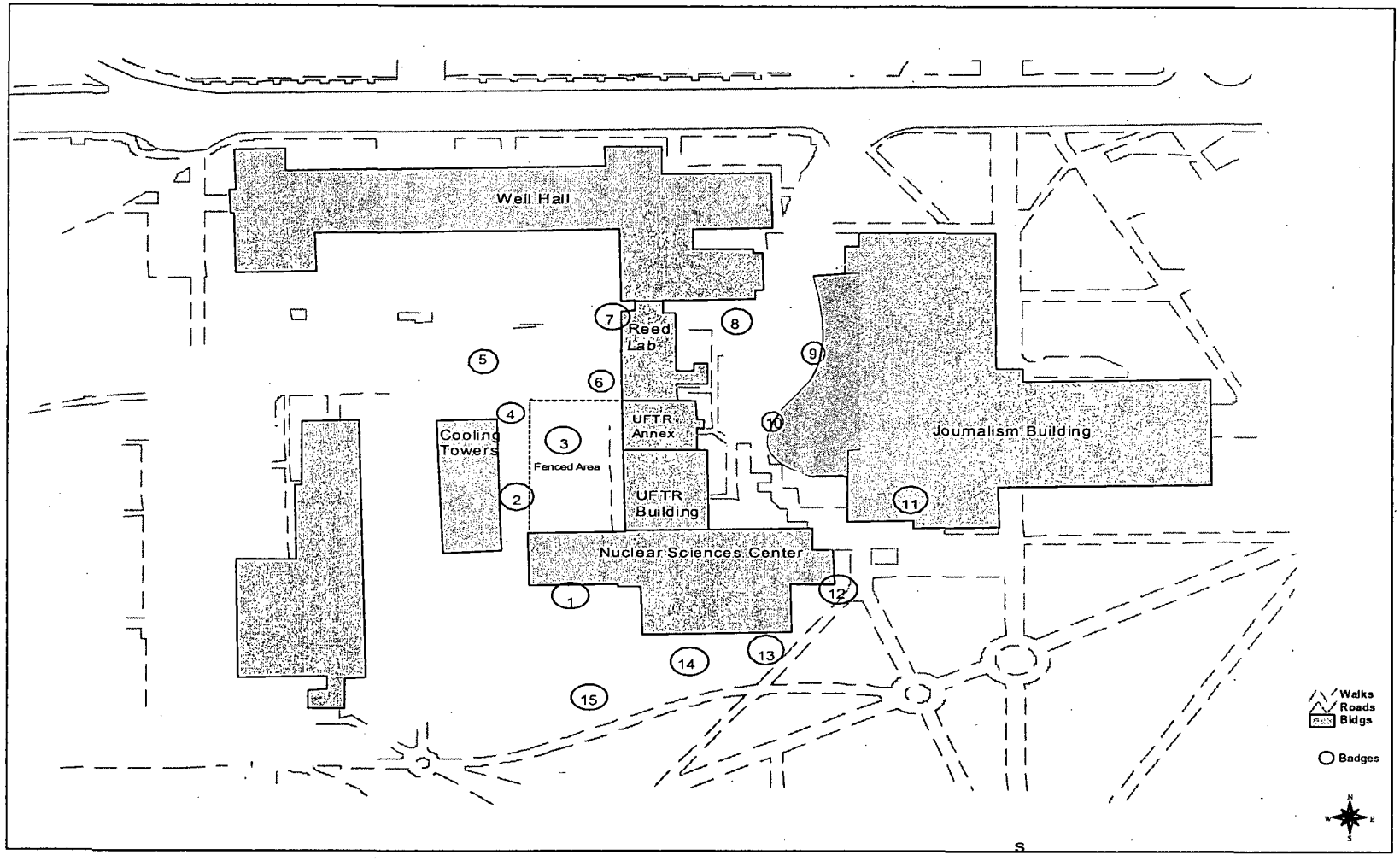

Figure 11-12 Typical Locations of Radiation Monitoring Devices used for Continuous Monitoring of UFTR Site .

References:

1. *Wagner, W.A., Feasibility Study of 500 kWth Operation of the University of Florida Training Reactor, Master's Thesis in Department of Nuclear and Radiological Engineering NRE. 1973, Florida: Gainesville.*
2. *Bevis H.A., Low Temperature Adsorption and Gamma Scintillation Spectrometry for Measuring Argon-41, PhD Dissertation in Department of Nuclear and Radiological Engineering. 1963, UFL: Gainesville.*
3. *Lochamy Jr, J.C., Determination of Stack Concentration of Argon-41 at the University of Florida Training Reactor, Master's Thesis in Department of Nuclear and Radiological Engineering. 1972, UFL: Gainesville.*
4. *10 CFR 20 Appendix B, Table 2 Column 1 - Standards for Protection Against Radiation.*
5. *University of Florida Radiation Control Guide. February 1997.*
6. *NRE, Department of Nuclear and Radiological Engineering, "Standard Operating Procedures of the University of Florida Training Reactor". 2000, University of Florida: Gainesville, Fl.*
7. *NRC, U.S. Nuclear Regulatory Commission, NRCDose, GASPAR II - Technical Reference and User Guide. 2001.*
8. *NRC, U.S. Nuclear Regulatory Commission, Regulatory Guide 1.109 " Calculation of Annual Doses to Man from Routine Releases of Reactor Effluents for the Purpose of Evaluation Compliance with 10 CFR 50, Appendix I." October 1977.*
9. *Bureau, U.S.C., Census 2000, Redistricting Law (Public Law 94-171) Summary File. 2000, U.S. Department of Commerce.*
10. *NRC, U.S.NRC Regulatory Guide 1.111. "Methods for Estimating Atmospheric Transport and Dispersion of Gaseous Effluents in Routine Releases from Light-Water-Cooled Reactors."*
11. *Hawley, S.C., R.L. Kathren, and M.A. Robkin, Analysis of Credible Accidents for Argonaut Reactors NUREG/CR-2079 PNL-3691. 1981, U S Nuclear Regulatory Commission.*
12. *Radiation Control Office-University of Florida - Radiation Control Technique #3, Instructions for Disposal of Radioactive Waste. 1999, UF: Gainesville.*

Appendix 11-A

UFTR CELL RADIATION LEVELS MEASURED AT 100 kWth

11-1 UFTR Cell Radiation Levels Measured at 100 kWth

Table 11-1A contains measured UFTR reactor cell radiation levels measured at 100 kWth steady-state power levels. The data on radiation levels in this survey was taken using the instruments indicated in Table 11-lA: Ludlum Model 3 (Geiger Mueller), Ludlum Model 9 (Ion Chamber) and Eberline PNR 4(Bonnerball). The position numbers in Table 11-1A correlate with the survey instrument locations shown on the Reactor Cell Floor Plan presented in Figure 11-1A. Data was taken with all shielding properly emplaced. In general, this survey data shows that the radiation levels in the UFTR cell during full power operation are very low. Such low radiation levels are sufficiently low to assure that occupational radiation exposures are as low as reasonably achievable for all personnel exposed to the radiation environment around the UFTR shields during full power operation.

Table 11-1A UFTR Reactor Cell Radiation Levels Measured at 100 kWth Steady-State Power Level on October 9, 2001

Survey Location	Radiation Levels (mR/hr or mrem/hr)			Position
	Ludlum 3	Ludlum 9	Eberline PNR 4	
1	7	3	1	3'
2	0.6	0.9	1	1'
3	8	3	1	3'
4	6	2	0.5	1'
5	2	1	<0.5	1'
6	0.5	0.4	<0.5	1'
7	0.7	0.2	<0.5	3'
8	2	2	1	1'
9	0.2	0.2	0.5	3'
10	1.5	1	0.5	3'
11	0.2	<0.2	<0.5	1'
12	0.8	<0.2	<0.5	1'
13	6	3	0.5	1'
14	5	2	0.5	3'
15	2	0.4	1	3'
16	4	1	1.5	3'
17	5	2	1.5	3'
18	0.6	<0.2	<0.5	3'
19	0.6	<0.2	<0.5	3'
20	0.6	0.4	0.5	3'
21	0.1	<0.2	<0.5	3'
22	<0.01	<0.2	<0.5	3'
23	30	20	0.5	1'
24	2	0.2	2	1'
25	25	15	2	1'
26	5	3	<0.5	1'

[

]

Figure 11A-1 UFTR Restricted Area Radiation Survey Locations

Appendix 11-B

UFTR AS LOW AS REASONABLY ACHIEVABLE PROGRAM

UNIVERSITY OF FLORIDA
TRAINING REACTOR FACILITY
AS LOW AS REASONABLY ACHIEVABLE (ALARA) PROGRAM

I. Management Commitment

A. The University of Florida Training Reactor (UFTR) facility is committed to a program for keeping radiation exposures (individual and collective) as well as effluents including waste generation as low as reasonably achievable (ALARA). In accordance with this commitment, we hereby delineate an administrative organization for radiation safety to foster the ALARA concept within the UFTR facility. The Administrative Organization responsible for implementing the UFTR ALARA Program is depicted in Figure 1.

B. The Radiation Control Officer (RCO) and Reactor Manager (or Facility Director) will perform a formal review to determine methods by which exposures as well as effluent levels including waste generation might be lowered. This review will be conducted annually at the end of each calendar year at intervals not to exceed fifteen (15) months. This review shall include reviews of operating procedures and past exposure records, inspections and consultations with the radiation control staff. A brief summary of the audit will be prepared covering the scope of the review and the conclusions reached.

C. The Facility Director/Reactor Manager and the Radiation Control Officer shall be active members of the Reactor Safety Review Subcommittee (RSRS) as required by UFTR Technical Specifications and the RSRS Charter. UFTR management will consider any modifications or changes as recommended by the RSRS including those resulting from the annual review of the radiation safety program performed by the RCO and the Reactor Manager (or Facility Director).

D. Modifications to operating and maintenance procedures and to equipment and facilities will be made when they will reduce exposures at reasonable costs. Records will be maintained to demonstrate that improvements have been sought, that modifications have been considered, and that they have been implemented where reasonably achievable. Where modifications have been considered but not implemented, records will be maintained to document the reasons for not implementing them. These records will normally be generated as part of the UFTR Quality Assurance Program.

E. In addition to maintaining doses to individuals as far below the limits as reasonably achievable, the sum of the doses received by all exposed individuals will also be maintained at the lowest practicable level in keeping with the legitimate goals and mission of the UFTR facility. This will be assured by continuing to meet University of Florida and UFTR Technical Specification requirements for radiation and contamination surveys at the UFTR.

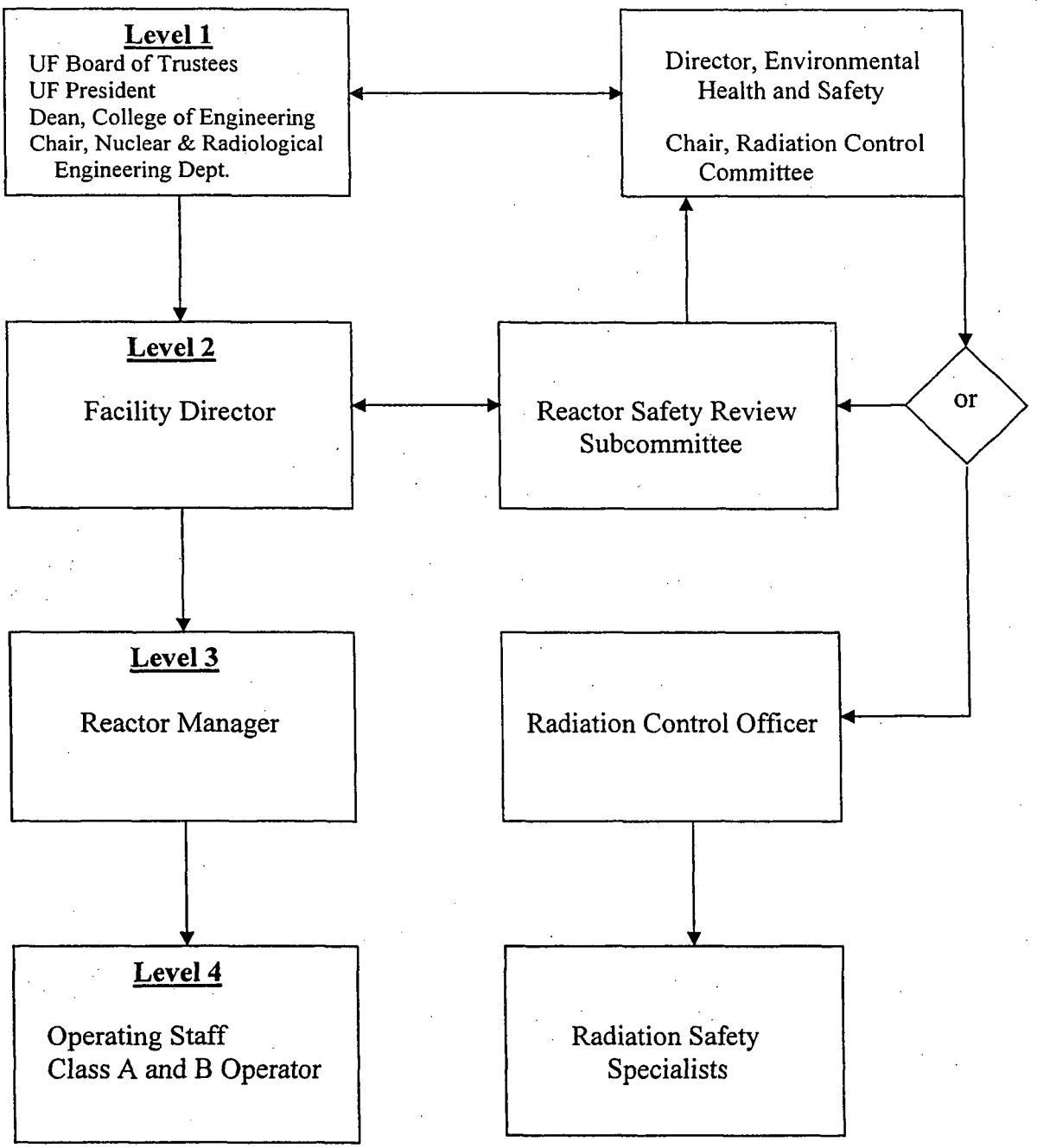

Figure 1. UFTR Organization Chart

II. UFTR Management

A. Review of Potential UFTR Facility Users and Workers

1. UFTR Management will review the qualifications of each proposed facility authorized (Radiation Worker Trained) user of radioisotopes and radiation with respect to the types and quantities of materials and uses for which the individual will be working to assure that the individual will be able to take appropriate measures to maintain exposure ALARA.

2. When considering a new use of radioactive material or a new experiment in the reactor, UFTR Management will review efforts to maintain exposure as well as related effluents and radioactive waste generation ALARA. The experimenter, worker or other user shall be subject to systematic procedures to ensure ALARA; the use of special radiation safety equipment, such as rubber or disposable gloves, fume hoods, remote handling tools, and lead shielding must be considered in the proposed use where applicable and implemented as appropriate to meet ALARA requirements.

   a. For operations personnel these considerations will be emphasized as part of the requalification training program.

   b. For other facility personnel (workers, researchers and others) these considerations will be emphasized as part of Radiation Worker Training per 10 CFR Part 19.

B. Delegation of Authority

1. UFTR Management will delegate authority to the RCO for enforcement of the ALARA concept. Responsibility shall remain with UFTR Management.

2. UFTR Management and the RSRS will support the RCO in those instances where it is necessary for the RCO to assert his/her authority in agreement with the UFTR organization shown in Figure 1.

C. Review of the ALARA Program

1. In association with the RCO, the RSRS will perform an annual review of all current radiation safety procedures and the development of new procedures as appropriate to implement the ALARA concept. This review will be performed as part of the annual RSRS audit of UFTR operations.

2. The RSRS will review all instances of deviations from the ALARA philosophy. Information in support of the review will be supplied by the RCO and UFTR Management.

3. The RSRS will evaluate the UFTR facility's overall effort for maintaining exposures ALARA. This review will include the efforts of the RCO, radiation protection personnel, licensed operators, facility workers, students, faculty and other facility users as well as those of UFTR Management.

4. The RCO and Reactor Manager will perform a quarterly review of occupational radiation exposure with particular attention to instances in which the Investigational Levels in Table 1 of Section VI are exceeded. The principal purpose of this review is to assess trends in occupational exposure as an index of the ALARA program quality and to decide if action is warranted when Investigational Levels (See Table 1) are exceeded.

III. Radiation Control Officer (RCO)

A. Annual and Quarterly Review

1. The RCO will perform an annual review of the radiation control program for adherence to ALARA concepts. Reviews of specific procedures may be conducted on a more frequent basis.

2. The RCO will review, at least quarterly, the external radiation exposures of authorized UFTR users and workers to determine that their exposures are ALARA in accordance with the provisions of Section VI of this program.

3. The RCO will review, at least quarterly, the records of radiation level surveys in unrestricted and restricted areas to determine that radiation levels were ALARA during the previous quarter.

4. ALARA records will be reviewed as part of the annual RSRS audit.

B. Education Responsibilities for ALARA Program

1. The RCO will inform authorized users, workers, and ancillary personnel of ALARA program efforts.

2. The RCO will ensure that authorized users, workers and ancillary personnel who may be exposed to radiation or radioactive materials will be instructed in the ALARA philosophy and informed that UFTR Management, the RSRS and the RCO are committed to implementing the ALARA concept. This instruction will be included in Radiation Worker Training conducted at the UFTR.

Table 1a. Investigational Levels for UFTR Operations Personnel (mrem (Sv) per calendar quarter)

		Level I	Level II	Level III
1a.	Total Effective Dose Equivalent (whole body); or	125 (1.25 mSv)	375 (3.75 mSv)	1250 (.0125 Sv)
1b.	Sum of the deep-dose equivalent and the committed dose equivalent to any organ or tissue other than the lens of the eye	1250 (.0125 Sv)	3750 (.0375 Sv)	12500 (.125 Sv)
2.	Lens of the eye (eye dose equivalent)	375 (3.75 mSv)	1125 (.01125 Sv)	3750 (.0375 Sv)
3.	Skin (shallow dose equivalent or to any extremity)	1250 (.0125 Sv)	3750 (.0375 Sv)	12500 (.125 Sv)

Table 1b. Investigational Levels for UFTR Non-Operations Personnel (mrem (Sv) per calendar quarter)

		Level I	Level II	Level III
1a.	Total Effective Dose Equivalent (whole body); or	50 (0.5 mSv)	150 (1.5 mSv)	500 (5 mSv)
1b.	Sum of the deep-dose equivalent and the committed dose equivalent to any organ or tissue other than the lens of the eye	500 (0.005 Sv)	1500 (.015 Sv)	5000 (0.05 Sv)
2.	Lens of the eye (eye dose equivalent)	125 (1.25 mSv)	350 (3.5 mSv)	1125 (11.25 mSv)
3.	Skin (shallow dose equivalent or to any extremity)	500 (.005 Sv)	1500 (.015 Sv)	5000 (.05 Sv)

Note 1: UFTR Operations Personnel are delineated as those badged personnel participating in the Reactor Operator Requalification Training Program; UFTR Non-Operations Personnel are delineated to include all other badged facility personnel including other workers, research personnel, students, etc. involved in activities related to the UFTR facility including the analytical and associated laboratories.

C. Cooperative Efforts for Development of ALARA Procedures

Authorized users, workers and ancillary personnel will be given opportunities to participate in formulation of the procedures that they will be required to follow at the UFTR.

1. The RCO and UFTR Management will be in close contact with all users and workers in the UFTR facility in order to obtain feedback and input to develop ALARA procedures for facility operation as well as use of radioactive materials.

2. The RCO and UFTR Management will establish procedures for receiving and evaluating suggestions for improving ALARA procedures and will encourage the use of these procedures.

D. Reviewing Instances of Deviation from Good ALARA Practices

The RCO will investigate all known instances of deviation from good ALARA practices at the UFTR facility and will determine the causes with support of and in conjunction with UFTR Management. The results of such investigations will be provided to UFTR Management and the RSRS for review and necessary action. The RCO may require changes in working procedures to maintain exposures ALARA; these should be recommended and implemented via the normal procedure review process involving UFTR Management, operations personnel and the RSRS.

IV. Authorized Facility Workers

A. New Experiments Involving Potential Radiation Exposures

1. The authorized worker or user will be Radiation Worker trained and will receive the advance approval of the RCO during the planning stage before using radioactive materials for a new experiment.

2. The authorized worker or user will evaluate all procedures before using radioactive materials to ensure that exposure will be kept ALARA. This may be enhanced through the application of trial runs.

B. Responsibility of Authorized Radiation Workers to Persons Under His/Her Supervision

1. The authorized Radiation Worker, whether UFTR operation staff or other UFTR facility worker, will explain the ALARA concept and his/her commitment to maintain exposures ALARA to all persons under his/her supervision. This will normally be accomplished by documented Radiation Worker Training per 10 CFR Part 19.

2. The authorized worker or user will ensure that persons under his/her supervision who are subject to occupational radiation exposure are trained and educated in good health physics practices and in maintaining exposures ALARA. This responsibility will be emphasized in the applicable Radiation Worker Training.

V. Personnel Who Receive Occupational Radiation Exposure

A. All radiation workers in the UFTR facility including licensed personnel, other workers, faculty, students and visiting users will be instructed in the ALARA concept and its relationship to working procedures and work conditions as part of Radiation Worker Training per 10 CFR Part 19. Visitors visiting on an infrequent basis and always accompanied in the facility will not require instruction.

B. All radiation workers will also be informed of recourses available if the individual feels that ALARA is not being promoted on the job.

VI. Establishment of Investigational Levels In Order to Monitor Individual Occupational External Radiation Exposures

The University has established and the UFTR facility hereby accedes to certain so-called UFTR Management Investigational Levels for occupational external radiation exposure which, when exceeded, will initiate review or investigation by the RCO with subsequent review by the RSRS and the RCC. The Investigational Levels are listed in Table 1. These levels apply to the exposure of individual workers. In cases where it is necessary for a worker's or a group of worker's doses to exceed these Investigational Levels, the UFTR facility retains the right to seek new Investigational Levels on the basis that it is consistent with good ALARA practices for that individual or group and the activity involved. Justification for new Investigational Levels will be documented with RSRS and RCO approval.

The RCO and a representative of UFTR Management (Facility Director or Reactor Manager) will review and initial the results of personnel monitoring not less than once in any calendar quarter. Prior specific approval to operate under the more liberal State or Federal regulations must be obtained for any such occasion from the RCC via the RSRS by submitting a written proposal through the Radiation Control Officer.

A. The following actions will be taken at the Investigational Levels as stated in Table 1.

1. Quarterly exposure of individuals to less than Investigational Level I.

   Except when deemed appropriate by the RCO or UFTR Management, no further action will be taken in those cases where an individual's exposure is less than Table 1 values for the Investigational Level I.

2. Personnel exposures equal to or greater than Investigational Level I, but less than Investigational Level II.

   The RCO will investigate the exposure of each individual whose quarterly exposures equal or exceed Investigational Level I and will report the results of the investigation at the first RSRS meeting following the quarter when the exposure was recorded. If the exposure does not equal or exceed Investigational Level II, no further action related specifically to the exposure is required unless deemed appropriate by UFTR Management, the RSRS or the RCC. The RSRS will, however, consider each such exposure in comparison with those of others performing similar tasks as an index of ALARA program quality and will record the review in the RSRS minutes.

3. Personnel exposures equal to or greater than Investigational Level II, but less than Investigational Level III.

   The RCO will investigate the exposure of each individual whose quarterly exposures equal or exceed Investigational Level II and will report the results of the investigation at the first RSRS meeting following the quarter when the exposure was recorded. If the exposure does not equal or exceed Investigational Level III, no further action related specifically to the exposure is required unless deemed appropriate by UFTR Management, the RSRS or the RCC. The RSRS and the RCC will, however, consider each such exposure in comparison with those of others performing similar tasks as an index of ALARA program quality and will record the review in the Committee minutes.

4. Exposure equal to or greater than Investigational Level III.

   The RCO and UFTR Management will promptly investigate the cause(s) of all personnel exposures equaling or exceeding Investigational Level III and, if warranted, will take action. A report of the investigation and actions taken, if any, will be presented first to the RSRS and then to the RCC at the first meeting following completion of the investigation. The details of these reports will be recorded in the respective minutes. Committee minutes will be sent to the Dean of the College of Engineering for review. The minutes, containing details of the investigation, will be made available to NRC inspectors for review at the time of the next inspection and will be included in the UFTR Annual Report.

VII. Establishment of Investigational Levels for UFTR Facility Effluents

ALARA goals are set at 50% of the values in 10 CFR 20, Appendix B, Table 2, Column 1 for gaseous releases while the ALARA goals are set at 20% of the values in 10 CFR 20, Appendix B, Table 3 for liquid releases to the sanitary sewer system. The response to various investigational levels for facility effluents will be the same as the responses for the investigational levels for radiation exposures listed in Section VI.

A. Gaseous Effluents

Argon-41 is normally the only significant gaseous release from the UFTR facility. For Argon-41 Investigational Level I will be a quarterly average release concentration of 30% of the Appendix B value; Investigational Level II will be a quarterly average release concentration of 50% of the Appendix B value; and Investigational Level III will be a quarterly average release concentration of 75% of the Appendix B value.

B. Liquid Effluents

Facility liquid effluents are normally from the holdup tanks in batch releases which are analyzed for high and low energy emitting mixed nuclides. Investigational Level I for liquid releases will be 10%, Investigational Level II will be 20%, and Investigational Level III will be 30% of the Appendix B, Table 3 levels.

VIII. Signature Approval

We hereby approve and certify that the University of Florida Training Reactor has implemented the ALARA Program set forth in this document.

Reactor Safety Review Subcommittee	1/4/94 Date	Facility Director	12/30/93 Date

CHAPTER 12

CONDUCT OF OPERATIONS

Table of Contents

Index of Tables

Index of Figures

12 Conduct of Operations

This chapter describes and discusses Conduct of Operations at the University of Florida Training Reactor (UFTR). Conduct of Operations involves the administrative aspects of facility operations, the facility emergency plan, the security plan, the quality assurance program, the reactor operator requalification and recertification program, the start up and environmental reports. This chapter of the Safety Analysis Report (SAR) forms the basis of Section 6 of the UFTR Technical Specifications (Chapter 14).

12.1 Organization

The UFTR is operated within the Department of Nuclear and Radiological Engineering of the University of Florida for the purposes of instruction and research. The UFTR is organized and administratively controlled as shown in Figure12.1 and 12.2. The President of the University, the Provost, the Dean of the College of Engineering, the Chairman of the Department of Nuclear and Radiological Engineering, the Director of the Nuclear Facilities and the Reactor Manager all have line responsibility for the administrative control of the reactor facility, for safeguarding the general public and facility personnel from radiation exposure and adhering to all requirements of the Facility License and Technical Specifications.

Direct supervision over the University of Florida, its policies and affairs, is vested with the Board of Trustees. All University affairs are administered by the President with the advice and assistance of the Vice President for Administrative Affairs. The Department of Nuclear and Radiological Engineering is part of the College of Engineering and is under the supervision of the Dean of the College of Engineering

12.1.1 Structure

The organizational structure is shown in Figure 12-2. Four levels of authority are provided.

- Level 1 - individuals responsible for reactor facility's licenses, charter, and site administration;
- Level 2 - individual responsible for reactor facility management;
- Level 3 - individual responsible for reactor operations and supervision of day-to-day facilities activities;
- Level 4 - reactor operating staff: Senior Reactor Operator (Class A operators); Reactor Operator (Class B operators) and Trainees

The Reactor Safety Review Subcommittee is appointed by, and shall report to, the Chairman of the University Radiation Control Committee. The Chairman of the University Radiation Control Committee reports to the Director of Environmental Health and Safety, who reports to the Vice-President for Administrative Affairs. Radiation safety personnel shall report to Level 2 or higher.

12.1.2 Responsibility

Director of Nuclear Facilities and Reactor Manager - The Director of Nuclear Facilities and the Reactor Manager are in complete charge of the reactor facility. They are responsible for the safe operation of the reactor, the physical protection of the facility, the scheduling and supervision of experiments using the reactor, the control of the reactor fuel, the keeping of logs and records, and the maintenance of the physical condition of the facility. They are also responsible for liaison with the NRC and other regulatory bodies, and for coordinating the teaching, training, research and service programs within the facility.

The Director of Nuclear Facilities has line responsibility over the Reactor Manager and is directly responsible for the conduct of operations at the reactor facility. The Reactor Manager reports to the Director of Nuclear Facilities and has direct supervision over the operations, maintenance and record keeping of the UFTR. The Director of Nuclear Facilities and the Reactor Manager select operator-technicians and supervise their training. The Reactor Manager enforces operating procedures and regulations and has the power to authorize operations or experiments in accordance with facility regulations.

The Reactor Manager can make changes which do not alter the original intent of a procedure and/or establish new procedures that do not have safety significance, and submit these changes or procedures to the Reactor Safety Review Subcommittee for routine review. The Reactor Manager can also authorize repetitions of experiments previously approved by the Reactor Safety Review Subcommittee discussed in Section 12.1.5.1, and routine tests or operations which are necessary under normal operations and/or operations with no unreviewed safety implications. The Reactor Manager is advised by the Director of Nuclear Facilities, the Reactor Safety Review Subcommittee, the Radiation Control Office and the University Radiation Control Committee. The Reactor Manager is appointed by the Director of Nuclear Facilities and the Chairman of the Department of Nuclear and Radiological Engineering, is formally a member of the Nuclear and Radiological Engineering Faculty, is qualified in experimental reactor physics and has qualifying experience in reactor operations.

Senior Reactor Operator - Senior Reactor Operator reports to the Reactor Manager and is responsible for directing the activities of Reactor Operators and trainees. Senior Operators shall be certified as Class A operators.

Reactor Operator - Reactor Operators report to the Senior Reactor Operator and are primarily involved in the manipulation of reactor controls, monitoring of instrumentation, and operation and maintenance of reactor related equipment. Reactor Operators shall be certified as Class B operators.

University Radiation Control Committee (URCC) - The URCC reports to the Director of Environmental Health and Safety to assure radiological safety of all University personnel and the public, to assure that ionizing and non-ionizing radiation sources are procured

and used in accordance with Federal and State regulations, and to assure that radiation exposures are as low as reasonably achievable

Reactor Safety Review Subcommittee - The Reactor Safety Review Subcommittee reports directly to the University Radiation Control Committee and provides independent review and audit of the safety aspects of reactor facility operations for the University of Florida Training Reactor.

12.1.3 Staffing

A. The minimum staffing required when the reactor is not secured shall be as follows:

(1) A certified reactor operator shall be in the control room;
(2) A second person shall be present at the facility complex able to carry out prescribed written instructions including instructions to initiate the first stages of the emergency plan, including evacuation and initial notification procedures. Unexpected absence for two hours is acceptable provided immediate action is taken to obtain replacement.
(3) A designated Senior Reactor Operator shall be readily available on call. "Readily Available on Call" means an individual who (a) has been specifically designated and the designation known to the operator on duty, (b) keeps the operator on duty informed of where he/she may be rapidly contacted and the phone number or other means of communication available, (c) is capable of getting to the reactor facility within a reasonable time under normal conditions (e.g., 30 min or within a 15 mi radius).

B. A call list of reactor facility personnel by name and telephone number shall be readily available in the reactor control room for use by the reactor operator. The call list shall include :

(1) Management personnel;
(2) Radiation safety personnel;
(3) Other operations personnel.

C. Events requiring direction of a Senior Reactor Operator (Class A operator) include:

(1) All fuel or control-blade relocations within the reactor core region;
(2) Relocation of any incore experiment with reactivity worth greater than one dollar.
(3) Recovery from unplanned or unscheduled shutdown (in this instance, documented verbal concurrence from a Senior Reactor Operator is sufficient).

12.1.4 Selection and Training of Personnel

The selection, training, and requalification of operations personnel shall meet or exceed the requirements of the American National Standards for Selection and Training Personnel for Research Reactors, ANSI/ANS-15.4-1977, Section 4.6.

UFTR operator training including requalification and recertification program is described in Section 12.10.

12.1.5 Radiation Safety

The radiation safety organization at the University of Florida is directed and overseen by the University Radiation Control Committee (URCC). The Committee is appointed by the Director, Environmental Health and Safety and typically includes faculties from such departments as Biological Sciences, Radiological Health, Nuclear and Radiological Engineering, Physics, Chemistry, Veterinary Sciences, and Environmental Science and Engineering as well as the Radiation Control Officer (ex-officio member). Typical departments represented on this Committee over its recent history are listed in Table 12-1 to demonstrate the breadth of interests and expertise represented on this Committee.

The URCC is responsible for advising the President on all matters related to radiation safety at the University of Florida. The primary purpose of the Committee is to review and grant permission for, or disapprove and refuse permission for, the use of radioactive isotopes or any other sources of ionizing radiation at the University of Florida to include insuring the health and safety of reactor personnel and the general public.

12.1.5.1 UFTR Reactor Safety Review Subcommittee

The Reactor Safety Review Subcommittee is referred to in abbreviated form as the RSR Subcommittee or the RSRS. This Subcommittee is a part of, and reports to, the University Radiation Control Committee (URCC) and provides its recommendations to the Director of Environmental Health and Safety. The Director of Nuclear Facilities and/or the Reactor Manager report any safety-related problems concerning the reactor to the RSR Subcommittee. After major modifications or repairs to the Safety or Control Systems, approval of the RSRS is obtained prior to resuming operation of the UFTR facility. The RSR Subcommittee reports directly to the Chairman of the URCC. The purpose, rules and membership of the RSRS, along with its basic purpose of reviewing and auditing UFTR operations for safety, are delineated in the following five paragraphs as presented in the Reactor Safety Review Subcommittee Charter included as Appendix 12A to this Safety Analysis Report [1].

12.1.5.1.1 Purpose of the RSR Subcommittee

The primary purpose of the UFTR RSR Subcommittee is to provide an independent review and audit of the safety aspects of reactor facility operations for the

University of Florida Training Reactor.

12.1.5.1.2 Charter and Rules of the RSR Subcommittee

To assure the safety of reactor operations, the review and audit functions of the RSR Subcommittee are conducted in accordance with an established charter or directive with written rules of procedure for Subcommittee operation including provisions outlined as follows:

1. The UFTR RSR Subcommittee meets not less than once per calendar quarter, at intervals not to exceed four (4) months, and more frequently as circumstances warrant, consistent with effective monitoring of facility activities. Records are kept of these meetings.

2. A quorum for RSR Subcommittee meetings consists of at least three members and at least three members must agree when voting, regardless of the number present.

3. Minutes are disseminated, reviewed, and approved in a timely manner.

12.1.5.1.3 Membership on the RSR Subcommittee

Membership requirements for the UFTR RSR Subcommittee are specified below:

1. The UFTR RSR Subcommittee consists of at least five members including the Chairman of the Department of Nuclear and Radiological Engineering, the Radiation Control Officer, the Reactor Manager (or Facility Director), and two technical personnel (at least one from outside the department) familiar with the operation of reactors and with the design of the UFTR. These two persons are recommended for appointment to the Chairman of the URCC by the Chairman of the Department of Nuclear and Radiological Engineering. Any member may designate a duly qualified representative to act in his/her absence.

2. The Executive Committee consists of the Reactor Manager (or Facility Director), the Radiation Control Officer, and the Chairman of the RSR Subcommittee.

3. The Chairman of the RSR Subcommittee is a member of the URCC and is selected by the Chairman of the URCC.

4. Appointed members to the RSR Subcommittee may be reviewed, and as appropriate, new appointments made by October 1 of each year calendar, by the Chairman of the URCC.

12.1.5.1.4 Review Function of the RSR Subcommittee

To meet the requirements of its review function, the RSR Subcommittee reviews the items outlined in the following paragraphs:

1. Proposed changes in equipment, systems, tests, experiments, or procedures;
2. All new procedures and major revisions thereto having safety significance, proposed changes in reactor facility equipment or systems having safety significance;
3. All new experiments or classes of experiments that could affect the safety of the reactor or result in the release of radioactivity;
4. Proposed changes in UFTR technical specifications, UFTR license or RSR Subcommittee charter;
5. Violations of UFTR technical specifications, UFTR license or RSR Subcommittee charter and violations of internal procedures or instructions having safety significance;
6. Deficiencies and any operating abnormalities having safety significance--recommendations are made for corrective actions;
7. Reportable occurrences--recommendations are made for corrective actions;
8. Audit reports and annual facility reports.

12.1.5.1.5 Audit Function of the RSR Subcommittee

The audit function of the RSR Subcommittee includes selective (but comprehensive) examination of operating records, logs, and other documents. Where necessary, discussions with cognizant personnel also take place. The individual immediately responsible for an area does not perform the audit in that area. The following paragraphs describe items that are audited:

1. Facility operations are audited for conformance to the technical specifications and applicable license or charter conditions, at least once per calendar year (interval between audits not to exceed 15 months).

2. The operator requalification and recertification training program for the operating staff is audited at least once every other calendar year (interval between audits not to exceed 30 months).

3. The results of actions taken to correct those deficiencies that may occur in the reactor facility equipment, systems, structures, or methods of operations that affect reactor safety are reviewed at least once per calendar year (interval between audits not to exceed 15 months).

4. The reactor facility Emergency Plan and the implementing procedures are reviewed at least once every other calendar year (interval between audits not to exceed 30 months).

Deficiencies uncovered that affect reactor safety are immediately reported to the Chairman of the URCC. A written report of the findings of the audit is submitted to the Dean of the College of Engineering, to reactor management, and to the review and audit group members within three (3) months after the audit has been completed.

12.2 Review and Audit Activities

Review and audit functions for UFTR facility operations are conducted to determine if the facility is being operated safely and within the terms of the license. The review and audit functions are performed by the Reactor Safety Review Subcommittee. An intensive, in-depth review of facility operations is made at least annually. One of the specific concerns addressed in such reviews, every other year, is the emergency planning in effect at the UFTR facility.

Review and audit of radiological safety procedures and other emergency related procedures are also performed by the University Radiation Control Committee and the Radiation Control Officer, an ex-officio member of the Reactor Safety Review Subcommittee.

12.3 Procedures

This section describes the procedures pertinent to normal operation and administration of the UFTR facility including the performance of experiments and modifications, repairs, tests and surveillances. The Reactor Manager is responsible for ensuring compliance with the established controls.

The Reactor Manager is responsible for the preparation of detailed written procedures for normal and emergency operations. These procedures are approved by the Reactor Safety Review Subcommittee before implementation for any procedure with safety significance and may be approved after implementation for minor changes in established procedures (that do not change the original intent) or new procedures with no safety significance (which are approved and implemented by the Reactor Manager). Procedures include administrative control procedures, routine operating procedures with pre-operational weekly and daily checklists, emergency procedures, fuel handling procedures, radiation control procedures, maintenance procedures and security plan response procedures. These procedures address special operations such as fuel transfers as well as requests for operation to support irradiations and other experiments.

12.3.1 Administrative Procedures

12.3.1.1 Access and Key Control

Outside doors of the reactor facility are normally locked. The rear freight-door

exit is only used for emergencies, refueling and other unusual situations. The operator-in-charge at the UFTR controls entry to the reactor area and can forbid entry at any time. The operator-in-charge requires personnel entering the reactor cell for work-related duties to either wear a personal dosimeter or be escorted by a responsible person wearing a dosimeter. Visitors are escorted and must sign in and out in the log book provided.

When the reactor is not operating, unsupervised access is permitted only to persons holding authorization from the reactor administration. Entry requirements are covered under the Physical Security Plan of the facility. Emergency instructions require that a senior member of the reactor staff or the Radiation Control Office be contacted prior to entry by police or fire rescue personnel in case of an accident.

Key control for the reactor cell is summarized as follows:

1. Console keys are in the custody of a licensed reactor operator.
2. Special keys are used to lock the shield plugs, the reactor crane switch and other reactor devices. These keys are kept in the reactor key cabinet which is in the Reactor Security Area and access to which is restricted to licensed reactor operators or other specially qualified personnel designated by the Reactor Manager or Facility Director.
3. Facility door keys and security system keys are issued to persons designated by the Reactor Manager and/or the Director of Nuclear Facilities. Further details on key control are not included in this Safety Analysis Report. A detailed description of the UFTR facility key control measures are contained in the Physical Security Plan for the UFTR submitted separately and withheld from public disclosure pursuant to 10 CFR 2.790(d).

12.3.2 Operating and Maintenance Procedures

12.3.2.1 Routine Operations

Manipulation of the UFTR reactor controls is permitted by a UFTR licensed reactor operator or by a non-licensed person under the direct observation and supervision of a licensed reactor operator. A senior reactor operator is on call at all times that the reactor is operating and a second person, duly qualified and certified as such, is present either in the reactor cell or within the UFTR facility complex. An operator-in-charge is designated for each reactor operation. The operator-in-charge (OIC) is responsible for ensuring that the following requirements are met during reactor operation.

1. The OIC is in a position to operate the controls of the reactor. This requirement means that the OIC cannot leave the reactor control room and is normally observing the controls and instruments at the console.

2. The correct procedures are followed and log sheets are filled out for all operations.

3. Any proposed experiment is properly authorized and compliance is assured for any special requirements that are noted.

4. The experimenter's proposed procedure conforms to the University Radiation Control Committee recommended practice and the experimenter has a valid radioactive material approval if the radioactive material will be transferred out of the reactor facility.

5. All samples removed from the reactor are monitored, their radiation levels recorded, and any necessary temporary access barriers or shielding are imposed.

6. The senior reactor operator on call or the Reactor Manager, and the experimenter if necessary, are informed in case of any unusual or unexpected occurrence, apparent equipment or instrument failure or other malfunction.

7. The Radiation Control Office has been notified if any experiment predicted to involve high radiation levels is to be performed to assure that the Health Physics support is present as necessary.

The operator-in-charge normally has satisfied requirements (3), (4) and (7) directly by ensuring that the Reactor Manager has correctly approved the proposed experiment and associated schedule. All members of the reactor staff are expected to be familiar with basic radiation safety procedures so that adequate safety is ensured even in the absence of Radiation Control Personnel.

The Reactor Startup Procedure (UFTR SOP-A.2) ensures that the reactor and experimental configuration are correct and removable shielding is in place or personnel otherwise protected, the instruments are calibrated and functioning, the scram and interlock circuits are functioning and scram set points properly set, and the facility is otherwise in proper condition for operation.

A daily log of UFTR operations with information related to pre-operational checks and facility usage is maintained in a logbook in the reactor control room. The log includes the name of the operator-in-charge, the experimental configuration, special instructions, periodic readings of instruments and control blade positions, results of tests and inspections, maintenance and change records, methods and reasons for shutdown, and any other notations the reactor operator deems appropriate. The log book, checklists, and other pertinent records are filed and audited annually by the Reactor Safety Review Subcommittee.

The UFTR Standard Operating Procedures Manual includes standard operating procedures for administrative control, routine operations, emergencies, fuel handling, radiation control, maintenance, and security plus technical specifications, UFTR ALARA Program, and the facility license with limitations plus various call lists and support information.

12.3.2.2 Routine Tests, Maintenance, and Monitoring

The Reactor Manager has set up a program for regular testing of all safety-related equipment, procedures and certain reactor components.

In addition to the startup checks of instruments, scrams and interlocks, periodic checks and maintenance are performed on a daily, weekly, quarterly, semiannual, annual, biennial and five year schedule.

Weekly and daily pre-operational checks are required by UFTR SOP-A.1, "Pre-Operational Checks." The pre-operational checks are divided into two (2) parts as described in this paragraph. Part I addresses weekly pre-operational checks and Part II addresses daily pre-operational checks and associated checklists. The pre-operational checks are performed by a licensed reactor operator or by one or more trainees under the direct supervision of a licensed reactor operator. The results of Part I and Part II checks are filed at the UFTR facility.

Any malfunction of the safety-related system for the UFTR is sufficient cause for precluding or stopping reactor operation until the malfunction is corrected. Written instructions for calibrations, tests and maintenance or repairs for the Reactor Safety and Control Systems are available for the UFTR as part of the SOPs. The results of all of the above periodic tests, checks, maintenance and monitoring are recorded in the operations log as well as the maintenance log and/or the surveillance files. Separate reports are also generated to the Reactor Safety Review Subcommittee and/or the NRC for more important failures.

The Radiation Control and Radiological Services Department performs routine surveys of the reactor and the reactor area, especially during reactor operation, to check radiation levels. The results of such monitoring are recorded and maintained in the operations log. The detection of any significant or abnormal radiation level outside the reactor facility requires immediate investigation and subsequent corrective action including procedural changes, addition of shielding or other action as deemed necessary to alleviate the problem.

A personal radiation dose monitoring badge service is provided as part of the personnel monitoring program. These are supplemented in the reactor area by pocket dosimeters which are also used for occasional visitors. The Radiation Control Officer is in charge of badging and associated records.

12.3.2.2.1 Daily Pre-Operational Checks

The daily pre-operational checks are started and satisfactorily completed within eight (8) hours prior to reactor startup or if the reactor has been shut down less than six (6) hours and no known condition exists that would prevent successful completion of a daily check. For these purposes, reactor shutdown means that the reactor had been critical with proper functioning of all instruments and components and that a shutdown had been effected under normal conditions. The typical scope and detail of the daily pre-

operational checks required by UFTR SOP-A.1, Part H, "Daily Pre-Operational Checks" is indicated in the Daily Pre-Operational Checklist presented in Figure 12-3 which is for information only and not required to be updated in this Safety Analysis Report as this form is expected to change periodically. The general requirements of the daily pre-operational checks are summarized below:

1. The console and equipment power supplies are checked to insure all items in the annunciator light panel, the radiation monitoring console, the auxiliary alarm panel, the recorders, and other systems related to operational equipment are functioning correctly.
2. The proper functioning of the shield tank recirculating system, the air particulate detector, portal monitor, and primary coolant resistivity monitor is checked.
3. The calibration and proper functioning of all nuclear instrumentation is checked.
4. The proper functioning of the control blade interlock system and the fast period interlock system is checked.
5. The proper functioning of the reactor safety system including the reactor trip systems and the annunciator alarms systems are checked.

12.3.2.2.2 Weekly Pre-Operational Checks

The weekly pre-operational checks are routinely performed on the first day of the working week when the reactor is operable. During extended shutdown periods for administrative purposes, maintenance or modifications, the weekly pre-operational checks are performed each week on the operable systems. UFTR SOP-A.1, Part I, "Weekly Pre-Operational Checks" is required to have been completed satisfactorily within seven (7) days prior to reactor startup. The scope and details of the weekly pre-operational check are summarized in the Weekly Pre-Operational Checklist presented in Figure 12-4 which is also for information only and not required to be updated in this Safety Analysis Report as this form is also expected to change periodically. The general requirements of the weekly pre-operational checks are summarized below:

1. The operability of the area radiation monitors and continuous air particulate radioactivity monitor is checked; the high-level alarms are tested with personnel in the vicinity notified before the alarms are tested.
2. Shutdown and operation of the core vent fan and diluting fan are tested.
3. The oil level of the control blade drive mechanisms is checked.
4. The portal monitor is source checked.
5. The shield tank water resistivity is checked.
6. The equipment in the reactor equipment pit is checked for proper operation, radiation levels and determination of any possible leaks in the primary coolant system.
7. The primary coolant resistivity is checked.
8. Control blade withdrawal times are checked and recorded.
9. The operation of "Reactor On" exterior lights is checked.

10. The primary, secondary and demineralizer pumps are checked
11. Water samples are collected from the primary coolant, secondary heat exchanger and secondary sample tank for analysis
12. The security system is checked.

12.3.2.2.3 Quarterly Checks

Surveillance checks, tests and maintenance performed at the facility on a quarterly basis are summarized below:

1. The safety operability tests are performed to check reactor scram functions in the event of:
   a) Loss of primary coolant pump power and flow.
   b) Loss of primary coolant level;
   c) Loss of shield tank water level;
   d) Loss of power to ventilation and dilution fans;
   e) Loss of secondary coolant flow, at power levels greater than 1 kW;
   f) Loss of electrical power to the console;
   g) Loss of detector chamber high voltage; and
   h) High average outlet temperatures;
2. The radiation monitors including the area monitors and the reactor vent system monitor are checked for calibration.
3. Evacuation drills are conducted for facility personnel, insuring their familiarity with the emergency plan.
4. Radiological surveys are conducted for the restricted as well as unrestricted areas around the facility.
5. Postings are checked around the facility.
6. Checks are conducted on the reactor building fire alarm monitoring system.
7. Reports of Safeguards Events are prepared in case of occurrence of the following events:
   a) actual, attempted or threatened theft of special nuclear material;
   b) actual, attempted or threatened acts or events which interrupt normal operations at UFTR due to unauthorized use of or tampering with machinery, components or control;
   c) loss, theft or unlawful diversion of special nuclear material under R-56 license;
   d) attempts to bring contraband into the reactor cell;
   e) any threatened, attempted, or committed act with the potential for reducing the effectiveness of the safeguards system below commitments of the Security Plan.
8. The air particulate detectors are checked for calibration.

12.3.2.2.4 Semiannual Checks

Surveillance checks, tests and maintenance performed at the UFTR facility on a

semiannual basis are summarized below:

1. The control blade drop times are measured from the fully withdrawn position.
2. Special nuclear material inventory is performed.
3. The Argon-41 stack effluent concentration is measured.
4. The control blade controlled insertion times are measured from the fully withdrawn position.
5. Key inventories are performed and security system batteries are checked
6. Security systems batteries are checked and replaced.
7. Neutron sources are leak checked.
8. Deep well secondary pump fuses are replaced.
9. Emergency call lists are updated.
10. The control blade clutch current bulbs are replaced.
11. The Requalification Training Program binders are reviewed.

12.3.2.2.5 Annual Checks

Surveillance checks, tests and maintenance performed at the UFTR facility on a semiannual basis are summarized below:

1. Calibration of instruments and test equipment.
2. Calibration of the log N-period channel, power level safety channel, and linear power level channel including performance of a calorimetric heat balance.
3. Measurement of the temperature coefficient of reactivity.
4. Replacement of Fire Alarm System Monitoring Station Batteries
5. UFTR decommissioning cost is updated.
6. Physical inventory security-related locks/cores are performed.
7. Measurement of control blade reactivity worth, total excess reactivity, maximum reactivity insertion rate and the shutdown margin to include that the minimum shutdown margin, with the most reactive blade withdrawn, is 2% $\Delta k/k$ and verification that the reactivity insertion rate for any single control blade does not exceed 0.06% $\Delta k/k$ per second, when determined as an average over any ten (10) seconds of blade travel time.

12.3.2.2.6 Biennial Checks

Surveillance checks, tests and maintenance performed at the UFTR facility on a biannual basis are summarized below:

1. Check to assure the void coefficient of reactivity is negative.
2. Evaluation of Standard Operating Procedures manuals for completeness.
3. Evaluation of Standard Operating Procedures for adequacy.
4. Evaluation and recertification of licensed operators.
5. Evaluation of the Emergency plan.

12.3.2.2.7 Five Year Check

Surveillance checks, tests and maintenance performed at the UFTR facility on a five years basis are summarized below.

1. Inspection of selected incore reactor fuel elements.
2. Inspection of the control blade and drive systems for mechanical integrity.

12.4 Required Actions

12.4.1 Safety Limit Violation

The following actions shall be taken in case of safety limit violation:

1. Reactor shall be shut down, and reactor operations shall not be resumed until authorized by the Nuclear Regulatory Commission.
2. The safety limit violation shall be promptly reported to Level 2 or designated alternates.
3. The safety limit violation shall be reported to the Nuclear Regulatory Commission.
4. A safety limit violation report shall be prepared. The report shall describe the following:
   a) applicable circumstances leading to the violation including, when known, the cause and contributing factors;
   b) effect of the violation upon reactor facility components, systems, or structures and on the health and safety of personnel; and
   c) corrective action to be taken to prevent recurrence.

12.4.2 Other occurrences

In case of the followings occurrences:

1. Release of radioactivity from the site above allowed limits;
2. Operation with actual safety-systems setting for a required system less conservative than the limiting safety-system setting specified in the Technical Specifications;
3. Operation in violation of limiting conditions for operation established in the Technical Specifications unless prompt remedial action is taken.
4. A reactor safety system component malfunction that renders the reactor safety system incapable of performing its intended safety function, unless the malfunction or condition is discovered during maintenance, a test or periods of reactor shutdown.
5. An unanticipated or uncontrolled change in reactivity greater than one dollar (reactor trips resulting from a known cause are excluded).
6. Abnormal and significant degradation in reactor fuel, or cladding, or both, coolant boundary, or containment boundary (excluding minor leaks), where applicable, which could result in exceeding prescribed radiation exposure limits of personnel or environment or both.

7. An observed inadequacy in the implementation of administrative or procedural controls such that the inadequacy causes or could have caused the existence or development of an unsafe condition with regard to reactor operations.
8. A violation of the Technical Specifications or the facility license.

the following actions should be taken:

1. Reactor conditions shall be returned to normal or the reactor shall be shut down. If it is necessary to shut down the reactor to correct the occurrence, operations shall not be resumed unless authorized by Level 2 or designated alternates.
2. The occurrence shall be reported to Level 2 or designated alternates and to the Nuclear Regulatory Commission as required.
3. The occurrence shall be reviewed by the RSRS at their next scheduled meeting.

12.5 Reports

In addition to the requirements of the applicable regulations, reports shall be made to the Commission as follows.

12.5.1 Operating Reports

Routine annual reports covering the activities of the reactor facility during the previous calendar year shall be submitted to the Commission within six (6) months following the end of each prescribed reporting year. The prescribed year ends August 31 for the UFTR. Each annual operating report shall include the following information:

1. a narrative summary of reactor operating experience including the energy produced by the reactor and the hours the reactor was critical;
2. a list of the unscheduled shutdowns including, where applicable, corrective action taken to preclude recurrence;
3. a tabulation of major preventive and corrective maintenance operations having safety significance;
4. a tabulation of major changes in the reactor facility and procedures, and a tabulation of new tests of experiments, that are significantly different from those performed previously and are not described in the Safety Analysis Report, including conclusions that no unreviewed safety questions were involved;
5. a summary of the nature and amount of radioactive effluents released or discharged to the environs beyond the effective control of the facility operators as determined at or before the point of such release or discharge (The summary shall include to the extent practicable an estimate of individual

radionuclides present in the effluent. If the estimated average release after dilution or diffusion is less than 25% of the concentration allowed, a statement to this effect is sufficient.);

6. a summarized result of environmental surveys performed outside the facility;
7. a summary of exposure received by facility personnel and visitors where such exposures are greater than 25% of that allowed.

12.5.2 Special Reports

There shall be a report not later than the following working day by telephone and confirmed in writing by telegraph or similar conveyance to the Nuclear Regulatory Commission, to be followed by a written report that describes the circumstances of the event within 14 days of any of the occurrences presented in Sections 12.4.1 (violation of safety limits) or 12.4.2 (other occurrences).

12.5.3 Other Special Reports

There shall be a written report sent to the Nuclear Regulatory Commission within 30 days of the following occurrences:

(1) permanent changes in the facility organization involving Level 1, 2 or 3 personnel;
(2) significant changes in the transient or accident analyses as described in UFTR Final Safety Analysis Report.

12.6 Records

Records of the following activities shall be maintained and retained for the periods specified below. The records may be in the form of logs, data sheets, or other suitable documentation. The required information may be contained in single, or multiple records, or a combination thereof. Recorder charts showing operating parameters of the reactor (i.e., power level, temperature, etc,) for unscheduled shutdown and significant unplanned transients shall be maintained for a minimum period of 2 years.

12.6.1 Records To Be Retained for a Period of at Least Five Years

(1) normal reactor facility operation (supporting documents such as checklists, log sheets, etc. shall be maintained for a period of at least 1 year),
(2) principal maintenance operations,
(3) reportable occurrences,
(4) surveillance activities required by the Technical Specifications,
(5) reactor facility radiation and contamination surveys where required by applicable regulations,

(6) experiments performed with the reactor,
(7) fuel inventories, receipts, and shipments,
(8) approved changes in operating procedures,
(9) records of meetings and audit reports of the RSRS.

12.6.2 Records To Be Retained for at Least One Training Cycle

Records of the most recent complete cycle of UFTR Requalification and Recertification Training Program for certified operations personnel shall be maintained at all times the individual is employed.

12.6.3 Records To Be Retained for the Lifetime of the Reactor Facility*

Records to be retained for the lifetime of the facility including after operations cease but prior to final decommissioning include:

(1) gaseous and liquid radioactive effluents released to the environs;
(2) offsite environmental monitoring surveys required by the Technical Specifications;
(3) radiation exposure for all personnel monitored;
(4) updated drawings of the reactor facility.

* Applicable annual reports, if they contain all of the required information, may be used as records in this section.

12.7 Emergency Planning

The Site Emergency Plan for the UFTR facility is described in the "Emergency Plan for the UFTR" and in the facility Standard Operating Procedures for emergencies which detail the responsibilities, procedures, and actions to be taken by all personnel in the event of emergency conditions which could endanger the health and safety of facility personnel and/or the general public.

The Director of Nuclear Facilities (or a duly authorized representative such as the Reactor Manager) has overall responsibility for the handling of emergency situations, including coordination with the Alachua County Office of Emergency Management, Shands Hospital and Clinics, Gainesville Fire Department, Law Enforcement Offices, the State of Florida Bureau of Radiation Control, and the Nuclear Regulatory Commission. The Radiation Control Officer assists the Director of Nuclear Facilities and/or the Reactor Manager in all matters which concern the health and safety of the public during any emergency.

The UFTR Emergency Plan has been submitted and approved as a separate document from the Safety Analysis Report to comply with all the requirements specified in 10 CFR 50 in connection with emergency preparedness regulations. The UFTR Emergency Plan follows Regulatory Guide 2.6 as guidance for compliance with 10 CFR 50.54(q) and 10 CFR 50 Appendix E.

The implementing procedures for the UFTR Emergency Plan include all the applicable necessary procedures to conduct the activities required by the Emergency Plan in an effective manner.

12.8 Security Planning

The plans for physical protection of the UFTR facility are described in the Physical Security Plan for the UFTR, already submitted to the NRC under separate cover and withheld from public disclosure pursuant to 10 CFR 2.790(d).

12.9 Quality Assurance

Paragraph (a) (7) of Part 50.34 "Contents of Applications; Technical Information" of 10 CFR Part 50, "Licensing of Production and Utilization Facilities," requires that each applicant for a construction permit to build utilization facility include in its Preliminary Safety Analysis Report a description of the Quality Assurance Program to be applied to the design and construction of the structures, systems, and components of the facility. Since the UFTR is an already operating facility presented for license renewal, these preliminary requirements are not applicable here.

At the time of construction and installation of the UFTR facility, and at other points whenever significant physical modifications were made to the UFTR reactor facility as documented in license amendments and other records of system changes, the necessary assurances of quality in the design, procurement, construction, installation and operation of the facility were obtained and records kept and stored by those responsible for assuring UFTR safety. At any future time that significant physical modifications are considered for the UFTR, established quality assurances are required. Since the UFTR is a small installation, there is no separate QA program division. However, the various requirements for QA programs are and will continue to be met by an active and effective system of overviews. In addition, adequate records to assure UFTR quality have been kept.

Regulatory Guide 2.5, Revision 0-12, May 1977 [2] describes a method considered acceptable by the NRC staff for complying with the Commission's regulations with regard to overall quality assurance program requirements for research reactors. In effect, this Regulatory Guide references and supports the standard ANSI N402-1976, "Quality Assurance Program Requirements for Research Reactors" which describes a quality assurance program for use in research reactor facilities. Since the general requirements for establishing and executing a quality assurance program for the design, construction,

testing modification, and maintenance of research reactors that are included in ANSI N402-1976 provide a method acceptable to the NRC for complying with the Program requirements of 10 CFR 50.34, this standard will be used as a guide for all future design, construction, and testing connected with significant modifications to the UFTR. Testing and maintenance of the existing UFTR facilities continue to have their quality assured as in the past; maintenance and testing quality assurance records are kept in accordance with previously established procedures which have been found acceptable by the NRC.

Paragraph (b)(6)(ii) of Part 50.34 requires that each applicant for a license to operate a facility include in the Final Safety Analysis Report a description of the managerial and administrative controls to be used to assure safe operation. The required description of the managerial and administrative controls used to assure safe UFTR operations are contained in this Chapter ("Conduct of Operations"), and in certain sections of Chapter 11, "Radiation Protection" of this Safety Analysis Report. This managerial and administrative organization is considered adequate to continue to assure the safety of operation at the UFTR facility from the design stages of any proposed modifications through associated testing and maintenance as well as continued operation of the UFTR in its present capacity or in any altered capacity or arrangement are proved by the NRC.

12.10 Operator Training and Requalification

12.10.1 Plant Staff Training Program

Training of reactor operators at the UFTR is done on an individual basis to fit the trainee's needs; schedules are arranged in a flexible manner in order to maximize the availability of the reactor as a research and teaching tool. Training procedures and requirements are determined by the Director of Nuclear Facilities/Reactor Manager and are directly supervised by a licensed reactor operator whenever licensed duties are being performed. The trainee will receive classroom and practical operational training to be adequately prepared for the written and practical examinations planned by the Director of Nuclear Facilities/Reactor Manager and by the NRC. These examinations are designed to fulfill the requirements established by the NRC in compliance with 10 CFR 50 and 10 CFR 55.

12.10.2 Replacement and Retraining

In the academic environment of the UFTR, reactor startups, shutdowns, normal and abnormal operations are routinely encountered by licensed senior reactor operators and reactor operators. The reactor staff routinely meets every week and discusses the reactor status quo, maintenance and tests performed or to be performed, as well as any other technical or administrative subjects considered being pertinent to the safe operation of the UFTR. Written monthly reports summarize reactor operations, maintenance, tests

and calibrations. Every licensed operator or senior reactor operator reviews this monthly report as part of required reading activities and it is discussed as necessary in staff meetings. Changes in procedures, technical specifications and regulations are reviewed and discussed before implementation. The reactor staff participates as instructors and/or students in formal university courses involving the training of students, or reactor operator training conducted for the UFTR or other facilities. A requalification and recertification training program for the periodic requalification of UFTR operators is conducted in accordance with NRC requirements as delineated in the "UFTR Reactor Operator Requalification and Recertification Program Plan." The requalification program plan for the UFTR personnel meets or exceeds the requirements established by 10 CFR 55 (Operators' Licenses) and ANSI/ANS-15.4-1988 entitled "Selection and Training of Personnel for Research Reactors."

Responsibility for the administration of the program rests with the Director of Nuclear Facilities of the Nuclear and Radiological Engineering Department or a designated representative.

All licensed operators are required to participate in all phases of this program except where specifically exempted; for instance, the individual making up a written examination is usually exempted. Persons in training for an operator's license also participate in the requalification program. An operator receiving a license during a requalification period is required to complete only those portions occurring after the effective date of the license received.

The requalification training program in force at the UFTR consists of nine (9) component areas described in the following sections. The requirements that must be met in order to complete the requalification and recertification program successfully are delineated in these sections.

12.10.2.1 Requalification Schedule

The UFTR requalification and recertification program is conducted biennially and is then followed by successive two-year programs. To assure that the program is most effective, the various requirements are planned according to the time schedules outlined in the "UFTR Reactor Operator Requalification and Recertification Program Plan."

12.10.2.2 Lectures, Reviews and Examinations

Lectures and examinations in the requalification program are divided into the group of topics listed in Table 12-2 for which preplanned training or preparation is scheduled. Self-study methods are also considered to be an adequate and appropriate training method. The schedule is set up so that the entire program covering the topics listed in Table 12-2 is completed over the two-year period.

An examination is administered at the end of each segment listed in Table 12-2, no later than four (4) weeks after the lecture or review session. For designated cases, a

final examination covering all topics is substituted for individual examinations. Results of the certified individual's evaluations from these examinations and from other training described herein, especially the results of the annual operations tests and the annual oral walk-through examinations, are used to determine the operator's proficiency including any weakness or deficiencies.

A comprehensive requalification written examination is supplied for all operators on a biennial schedule. A lecture may be given prior to this examination but is not required.

Each licensed operator also takes an annual operations test to demonstrate operational proficiency and understanding of system responses. In addition, each licensed operator demonstrates satisfactory understanding of the operation of the facility systems, operating procedures and license as well as facility procedure and license changes during an annual walk-through examination. These examinations are administered by a designated Senior Reactor Operator.

A special training session is held prior to any refueling operation and/or fuel handling operation. The required operations are discussed/practiced and procedures are reviewed to assure proficiency of all personnel involved. Emergency actions are also reviewed. A practical training in fuel handling is conducted biennially.

Any changes in procedures, technical specifications, regulations, as well as any changes to the facility with safety significance are reviewed by every licensed operator. Furthermore, activities in the reactor, including modifications, maintenance, results of calibrations and tests, as well as any procedural changes are summarized in a written report which is made available to all licensed reactor operators in the Required Reading List and discussed as needed.

Various documents, letters and memos are maintained in the Required Reading List prior to permanent filing. Each operator is responsible for reviewing the list periodically in a timely manner to remain current with the information contained in the Required Reading List. Initials are entered to acknowledge completion of review.

A yearly review of facility operations, maintenance, modifications, etc., is conducted by the Director of Nuclear Facilities or the Reactor Manager with the operating staff using the UFTR Annual Progress Report as the basis for the review. More frequent reviews may be conducted as appropriate.

12.10.2.3 Requalification Operations and Checkouts

Over the two year requalification period, each certified individual performs at least ten (10) reactivity control manipulations in any combination of reactor startups, shutdowns, or significant reactivity changes. To insure operator proficiency over a range of ordinary operations, the following schedule of operations and checkouts is maintained by all licensed operators when the reactor is operable.

1. Each licensed operator performs at least one reactor startup (and shutdown) quarterly at intervals not to exceed four (4) months. This operation includes at least one additional reactivity manipulation on a quarterly basis.
2. Each licensed operator performs at least one daily checkout quarterly at intervals not to exceed four (4) months.
3. Each licensed operator performs at least one weekly checkout semiannually at intervals not to exceed eight (8) months.
4. Each licensed operator performs at least four (4) hours of licensed activities (reactor operations) during each calendar quarter.

It is the responsibility of each operator to insure that these requirements on performance of reactivity control manipulations are met and logged in the operator's requalification notebook. Each operator is also responsible to assure that monthly operating hours are logged in the same notebook.

To meet minimum requalification and recertification requirements, other than the four (4) hours of licensed activities quarterly, licensed reactor operators take credit only for reactivity control manipulations which they perform themselves. Any operator who fails to perform the required licensed activities listed in this section receives supervised practical training to meet each of these requirements prior to resuming solo operation for certified activities. In particular, if the requirement to exercise the operator's license for a minimum of four (4) hours of licensed activities during each calendar quarter is not met, then the license becomes inactive; prior to reactivation of the license (recertification), the Reactor Manager or alternate verifies that qualifications are current and the operator must perform six (6) hours of licensed activities under the direction of a licensed operator or senior reactor operator.

Specific operational practices including the annual operations test, the annual walk-through examination, and the requirements for conducting facility checkouts, startups, shutdowns and reactivity manipulations including at least four (4) hours of certified activities per calendar quarter, constitute the bulk of the operator on-the-job training requirements, in addition, the biennial fuel handling training as well as semiannual training on emergency response equipment, periodic emergency drills, and annual special equipment training are also considered a major portion of the practical on-the-job training and are considered adequate to assure proficiency for safe operation of the facility.

12.10.2.4 Emergency Drills

Emergency drills are held quarterly. At least once per year these drills involve the participation of the University Police Department, the Radiation Control Officer, and such other emergency assistance teams as appropriate for the drill in question. Each operator is required to participate in two emergency drills per year at intervals not to exceed eight (8) months. A review of the drill and applicable emergency procedures is

performed with all certified individuals within thirty (30) days after completion of the drill.

12.10.2.5 Absence from Authorized Activities

An operator who has not been actively performing certified functions for a period in excess of four months is required to demonstrate to the Reactor Manager or duly authorized representative that his/her knowledge and understanding of the operation and administration of facility are satisfactory before the operator is returned to certified duties. An individual is required to demonstrate satisfactory knowledge and understanding of facility operation and administration through an interview and evaluation or a written, oral or operational examination or a suitable combination thereof. Any deficiencies uncovered are corrected before the individual is allowed to resume performance of certified functions.

12.10.2.6 Evaluation and Retraining of Operators

12.10.2.6.1 Grade Requirements

All operators are required to complete each examination satisfactorily according to the following requirements:

1. A grade higher than 80% requires no additional training. Nevertheless, the results of all examination to include missed questions should be reviewed with the operator to assure proper understanding.
2. A grade in the range of 65 % to 79 % requires additional training in those areas or topics where weaknesses or deficiencies are indicated. This retraining and retesting is required to be completed within sixty (60) days from the date on which the examination was administered and prior candidate being certificate.
3. With a grade of less than 65 % the individual is evaluated by the Facility Director or designated duly representative within on month, to determine whether deficiencies require that the individual's certification be withdrawn. The individual is placed in an accelerated retraining program in those areas where weaknesses or deficiencies are indicated. This retraining is required to be completed within four (4) months of the date the examination was administered. If the individual does not achieve passing scores after reexamination the certification is withdrawn.

Additional appropriate training requirements in the form of formal lectures, tutoring, self-study or on-the-job training are based on the results of the examinations conducted.

12.10.2.6.2 Accelerated Training

Accelerated training programs are completed within four months following the grading of the examination. Furthermore, within one month after the grading of the examination, an evaluation is made by the Reactor Manager or a designated representative to determine if the deficiencies uncovered warrant withdrawal of the individual's certification pending completion of the accelerated training program. The evaluation considers the individual's past performance record, the supervisor's evaluation and past test scores as well as current deficiencies. An oral exam may also be given to aid in the evaluation. Regardless of the score, if the individual's test indicates a deficiency in a critical area that affects safety, a training program shall be administered to promptly correct the deficiency.

12.10.2.6.3 Additional Training Requirements and Evaluations

Additional training is provided whenever needed to correct weaknesses or deficiencies uncovered. Such additional training is completed prior to the conclusion of the specific requalification program or application for renewal of the operator's license, whichever occurs first.

An evaluation is made of an operator any time his/her physical or mental condition appears impaired in a manner that his/her performance of duties as an operator appears to be affected. Any exemplary performances or additional duties performed by an operator are noted in his/her requalification folder notebook to aid later evaluations.

12.10.2.6.4 Deficiencies Affecting Safety

Regardless of test scores, if the individual's test indicates a deficiency in a critical area that affects safety, training is required to be promptly administered to correct the deficiency or the operator is removed from performing certified duties in the affected area until the deficiency is corrected.

12.10.2.6.5 Evaluation Via Annual Examination

Each licensed reactor operator and senior reactor operator is required to demonstrate satisfactory understanding of the operation of the facility systems, operating procedures, facility procedures and license changes during an annual oral walk-through examination and an annual operations examination administered by a designated senior reactor operator in addition to other practical training which includes checkouts, reactor operations, fuel handling and other equipment training.

12.10.2.6.6 Biennial Evaluations

An in-depth evaluation of the operating performance of each licensed operator is performed and documented biennially and/or prior to their recertification anniversary to insure that they have the knowledge, competence, and dexterity to operate the reactor

safely and to take appropriate actions in response to abnormal and emergency situations that may arise.

The evaluation includes results from the examinations, the annual operations tests, the annual walk-through examinations and other on-the-job evaluations of operational proficiency and any other available indications of the operator's capability to discharge his/her duties in a safe and competent manner.

12.10.2.7 Recertification

Certified individuals who have successfully completed the requalification and recertification program may be recertified by the Facility Director or a designated alternate. Such individuals must be cognizant of technical specifications as well as design and procedure changes in a timely manner.

12.10.2.8 Requalification Documentation and Records

Records are kept to assure that all requirements of the "UFTR Operator Requalification and Recertification Program Plan" are met.

Each operator has an individual folder notebook containing signature blocks for lectures attended, prepared or assigned self-study sessions, reactivity manipulations performed, weekly and daily checkouts performed, and emergency drills participated in by the operator. The notebook also contains copies of written examinations administered, the answers given by the operator, results of any evaluations and documentation of any additional training administered in areas in which an operator has exhibited deficiencies. The performance of, or participation in, special activities such as fuel handling by the individual operator, is also logged in the requalification notebook.

A Master Requalification Training Manual is used to organize training requirements; it contains a schedule of all required lectures, reviews, emergency drills, and other exercises. The date the item is performed is indicated in this manual. A section of this manual is designated to contain completed training items, attendance sheets, master copies of tests given and lecture outlines and other materials if available. A separate section of this manual is also used to indicate operator license amendment commitments and the dates for each including re-license dates for all licensed operators.

Pertinent documents and records pertaining to the requalification program are maintained at the UFTR as part of the facility records for at least six (6) years.

12.10.2.9 Requalification Document Review and Audit

The individual operator requalification notebooks are reviewed on a semiannual basis at intervals not to exceed eight (8) months by a designated senior reactor operator as noted by the inclusion of the SRO's dated signature. Any deficiencies noted during the review are brought to the attention of the Director of Nuclear Facilities or the Reactor

Manager who then insures that appropriate corrective action is taken.

An audit of requalification program records is conducted at least biennially by the UFTR Reactor Safety Review Subcommittee at intervals not to exceed twenty-seven (27) months. Such audits are documented by the RSRS via its audit report or equivalent document.

12.11 Startup Plan

There is currently no initial test program considered for the UFTR facility. Since the UFTR is an already operating facility as presented for license renewal, an initial test program is not considered to be applicable.

12.12 Environmental Reports

No significant changes were implemented in the UFTR in the past 20 years, since its relicense in 1982 and the considerations presented in the UFTR Environmental Appraisal are still valid.

Table 12-1 Typical University of Florida Departmental Representation on the University Radiation Control Committee

Chemistry (Nuclear)	Oral Biology
Engineering Administration	Physics (Nuclear)
Environmental Engineering Sciences	Radiation Control Officer
Microbiology	Shands Hospital Safety/Security Officer
Nuclear and Radiological Engineering	University Office of the General Counsel
Nuclear Medicine	Veterinary Medicine

Table 12-2 Topics for UFTR Operator Requalification and Recertification Training Program

I.	Nuclear Theory and Principles of Operation
II.	Design and Operating Characteristics
III.	Instrumentation and Control Systems
IV.	Reactor Protection System
V.	Normal, Abnormal and Emergency Procedures
VI.	Radiation Control and Safety
VII.	Technical Specifications and Applicable Portions of Title 10, Code of Federal Regulations
VIII.	Emergency Plan
IX.	Security Plan

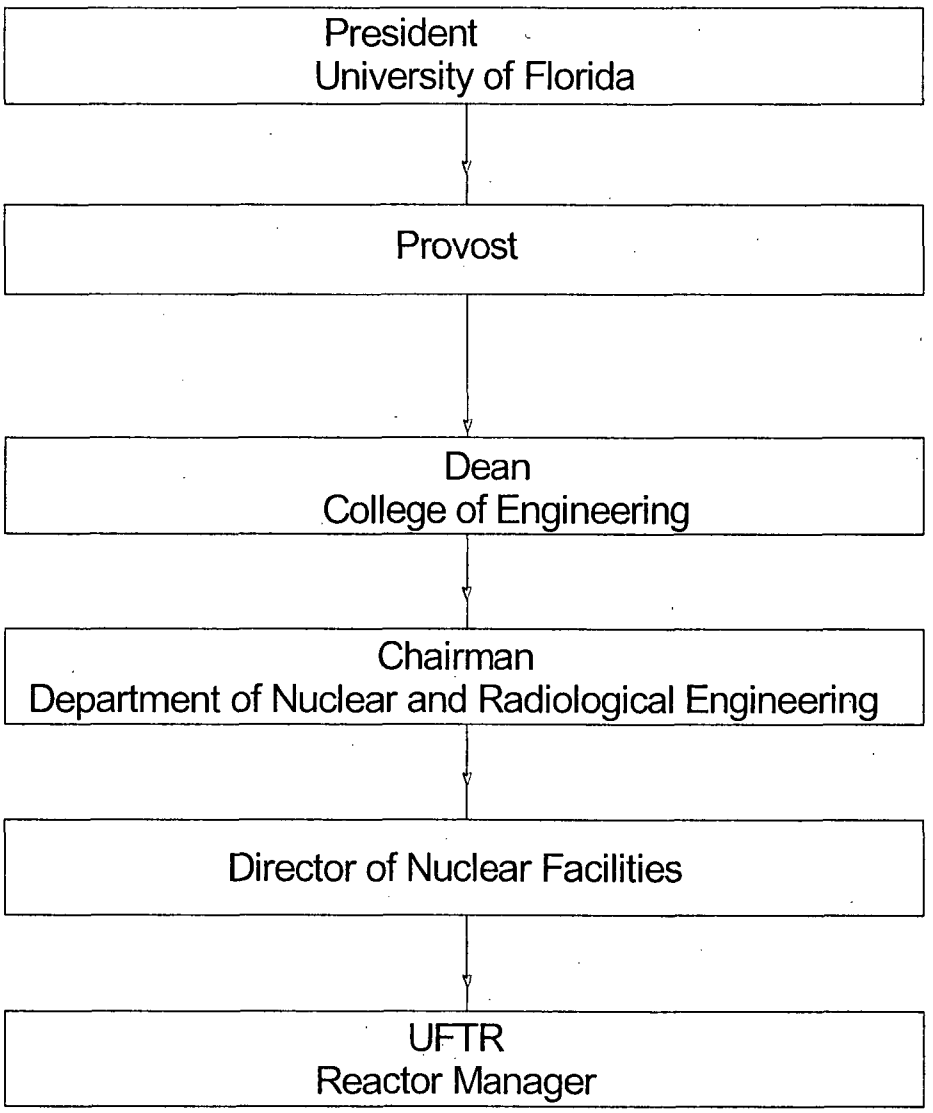

Figure 12-1 Line Responsibility Flow Diagram for Administrative Control of the UFTR

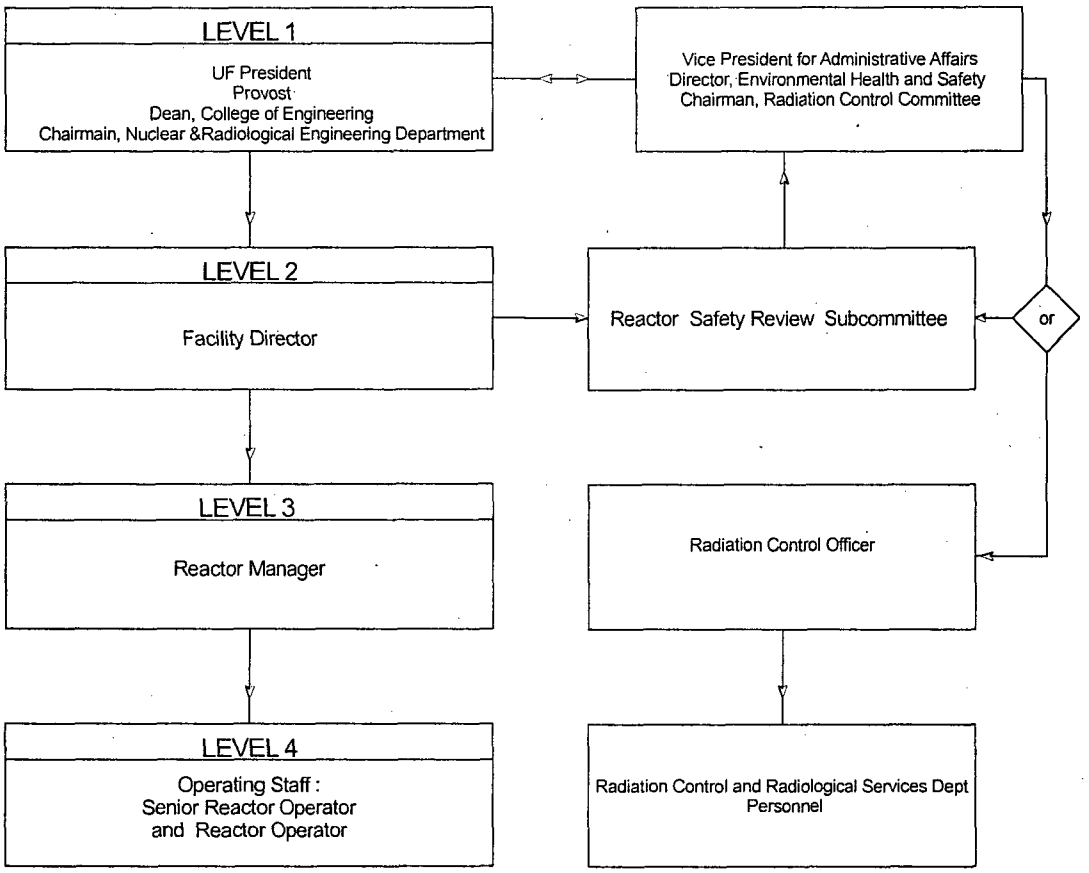

Figure 12-2 UFTR Organizational Chart

UFTR FORM SOP-A.1B
DAILY PRE-OPERATIONAL CHECKOUT LIST

DATE: _____

7.2 **RECORD** Start Time ..... _____*

Console and Equipment Power

7.2.1.1 **CHECK** East Wall Power Breakers ON ..... _____

7.2.1.2 **CHECK** Well Pump Breaker ON ..... _____

7.2.1.3 **ILLUMINATE** Console "POWER ON" Backlit Switch . _____

7.2.1.4.1 **CYCLE** Console "POWER ON" Backlit Switch ..... _____

7.2.1.4.2 **DEPRESS** Unlit Switches, Right Motor Control Annunciator Panel ..... _____

7.2.1.4.3 **CYCLE** Mode Selector Switch, Leave in "MANUAL" ... _____

7.2.1.4.4 **VERIFY** "DOWN" Lights ON ..... _____

Recorder Checkouts

7.2.1.5.1 **MAKE and/or CHECK** Log/Lin Recorder Operational; Amplifier Power, Chart Drive, Chart Paper ..... _____

7.2.1.5.2 **CHECK** Operation, Chart Paper for Area Monitors, Stack Monitor, and APD(s) ..... _____

7.2.1.5.3 **CHECK** Chart Paper for Temperature Monitor ..... _____

Radiation Monitor Console

7.2.1.6.1 **VERIFY** Operation Stack/Radiation Monitors ..... _____

7.2.1.6.2 **VERIFY** "NO FAIL" Lights Illuminated ..... _____

7.2.1.6.3 **POSITION** Radiation Monitor Power Supply Toggle Switches: "FAIL" in OFF, "TRIP 2" in OFF, "ALARM" in ALARM ..... _____

7.2.1.6.4 **DEPRESS** Push Button, **CHECK** Illumination of Alarm Lights on Modules and Audible Alarm ..... _____

7.2.1.6.5 **VERIFY** all AC and DC Power Supplies Functional .... _____

Auxiliary Alarm Panel

7.2.1.7 **VERIFY** 4 Green Lights ON ..... _____

Dump Valve

7.2.1.8.1 **RESET** Console Magnet Power Key, **CHECK** "DUMP VALVE" Light Out, Key in OPERATE ..... _____

7.2.1.8.2 **REMOVE, SECURE** Console Magnet Power Key ..... _____

Operational Equipment Startup and Checkout

7.2.1.9.1 **START** Dilute Fan, **RECORD** RPM ..... _____*

7.2.1.9.2 **START** Core Vent Fan ..... _____

7.2.1.9.3 **START** Demineralizer Pump ..... _____

7.2.1.9.4 **START** Primary Coolant Pump, **RECORD** Flow ..... _____*

7.2.1.9.5 **START** Shield Water Pump ..... _____

Shield Tank Recirculation

7.2.1.10.1 **CHECK** Shield Water Recirc Operation ..... _____

7.2.1.10.2 **CHECK** for Proper Flow ..... _____

7.2.1.10.3 **CHECK** for Proper Valve Alignment ..... _____

Air Particulate Detectors

7.2.1.11.1 **CHECK** APD Operation (AIM3BL/AMS[4]) ..... ____/____

7.2.1.11.2 **CHECK** APD Air Flow (AIM3BL/AMS[4]) ..... ____*/____*

7.2.1.11.3 **CHECK** Range Switch (x10) (AIM3BL) ..... _____*

7.2.1.11.4 **CHECK** "READY" Light On, "MALFUNCTION" Light Off (AMS[4]) ..... _____

7.2.1.12 **CHECK** Portal Monitor ..... _____

Resistivity Bridge

7.2.1.13.1 **CHECK** Resistivity Bridge Power ON, Red Light Functional ..... _____

7.2.1.13.2 **CHECK** Demin Inlet Resistivity ..... _____*

7.2.1.13.3 **CHECK** Demin Outlet Resistivity ..... _____*

7.2.1.13.4 **SET** Switch to Inlet/Alarm to 1 Megohm-cm ..... _____

Operational Checks

7.2.2.1 **ROTATE** Console Magnet Power Key to RESET ..... _____

7.2.2.1.1 **VERIFY** Clutch Lights Out ..... _____

7.2.2.2.1 **RETURN** Console Magnet Power Key to OPERATE, **VERIFY** Scram Lights Out ..... _____

7.2.2.2.2 **VERIFY** Clutch Lights ON ..... _____

7.2.2.2.3 **VERIFY** Red Rotating Beacon On ..... _____

7.2.2.2.4 **VERIFY** Temperature Monitor Strip Chart Recorder Operating ..... _____

Blade Interlock Checks

7.2.3.1 **PLACE** Calibrate and Test Switches to OPERATE or OFF ..... _____

7.2.3.2 **RECORD** "SOURCE" Light ON or OFF ..... _____*

7.2.3.2.1 **IF** "SOURCE" Interlock ON, **VERIFY** No Control Blade Can Be Withdrawn ..... _____

7.2.3.2.2 **IF** Less than 2 CPS, **INSERT** PuBe Source, **RECORD** Counts ..... _____*

7.2.3.2.3 **CLEAR** "SOURCE" Interlock. ..... _____

7.2.3.3.1 **ROTATE** Safety 1 Calibrate Switch to ZERO, **VERIFY** "INT'LK" Light ON ..... _____

7.2.3.3.2 **ACTIVATE** Period Calibrate Switch, **VERIFY** "INT'LK" Light ON ..... _____

REV 16, 2/97
TCN: 10/01
TCN: 2/02

Figure 12-3 UFTR Daily Pre-Operational Checkout List (Example)

UFTR FORM SOP-A.1B
DAILY PRE-OPERATIONAL CHECKOUT LIST (continued)

7.2.3.3.3 **HOLD** Safety 2 Cal in Zero, "INT'LK" ON ..... _____

7.2.3.3.4 **ACTIVATE** Safety 1 Trip Test Switch, **VERIFY** No Control Blade Can Be Withdrawn ..... _____

7.2.3.4.1 **ACTIVATE** Period Trip Test Control Switch, **VERIFY** "FAST PERIOD" On at 10 Sec Period ..... _____

7.2.3.4.2 **VERIFY** No Control Blade Can Be Withdrawn ..... _____

7.2.3.5.1 **VERIFY** Multiple Blade Interlock ..... _____

Nuclear Instrument and Calibration Checks

7.2.4.1 Period Switch in Calibrate, Indicated 3 Sec Period ... _____*

7.2.4.2.1 Safety 1 Cal in Zero, 0% Indicated ..... _____*

7.2.4.2.2 Safety 1 Cal in Cal, 100% Indicated ..... _____*

7.2.4.2.3 Safety 1 Cal in Positions 1-6, **VERIFY** Wide Range Meter at Red Marks, "EXTENDED RANGE" Light Out at Position 2, Log Pen Follows ..... _____

7.2.4.3.1 Linear Range to Zero, 0% Indicated ..... _____*

7.2.4.3.2 Linear Range to Calibrate, _____* ..... _____*

7.2.4.3.3 Linear Range to Range of Operation ..... _____

7.2.4.4.1 Safety 2 Calibrate in Zero, 0% Indicated ..... _____*

7.2.4.4.2 Safety 2 Calibrate in Cal, 100% Indicated ..... _____*

Scram and Annunciation Checks

7.2.5.1.1 Safety 1 Cal to Position 4, Press and Hold Well Pump Bypass Switch, Safety 1 Trip Test to 1%: **VERIFY** "SEC PRESS" (~10 Sec Delay) and "ON" Lights Out, Release Bypass Switch ..... _____

7.2.5.1.2 **START** Secondary Cooling, **VERIFY** Flow, **RESET** Magnet Power Key, **VERIFY** "SEC PRESS" Clears ..... _____

7.2.5.1.3 Controls to OPERATE or OFF ..... _____

7.2.5.2.1 **SET** Temperature Selector Switch to 150°F, **SET** Trip Test Switch to TRIP TEST, **VERIFY** and **RECORD** Audible Alarm at 150°F ..... _____*

7.2.5.2.2 **SET** Temperature Selector Switch to 155°F, **VERIFY** and **RECORD** "HI PC TEMP" Scram On, "ON" Lights Out at 155°F ..... _____*

7.2.5.2.3 **RESTORE** Monitor/Recorder to Normal ..... _____

7.2.5.3.1 **RESET** Console Magnet Power Key, **RAISE** Safety Blade 1 to 40 Units ..... _____

7.2.5.3.2 **DEPRESS** Manual Scram Bar, **VERIFY** "ON" Lights Out, "DOWN" Lights On, "MANUAL" Scram On .... _____

7.2.5.4.1 **RESET** Console Magnet Power Key, **RAISE** Safety Blade 2 to 40 Units ..... _____

7.2.5.4.2 Safety 1 Cal to Position 1 ..... _____

7.2.5.4.3 **ROTATE** Safety Channel 1 Trip Test, at 125%: "ON" Lights Out, "DOWN" Lights On, "SAFETY 1" Scram Indicator ON ..... _____

7.2.5.4.4 Switches to OPERATE or OFF ..... _____

7.2.5.5.1 **RESET** Console Magnet Power Key, **RAISE** Safety Blade 3 to 40 Units ..... _____

7.2.5.5.2 **ROTATE** Safety 1 Cal to Position 1 ..... _____

7.2.5.5.3 **ROTATE** Period Trip Test, at 3 Sec Period: "ON" Lights Out, "DOWN" Lights On, "PERIOD" Scram Iluminates ..... _____

7.2.5.5.4 **RETURN** Switches to OFF or OPERATE ..... _____

7.2.5.6.1 **RESET** Console Magnet Power Key, **RAISE** Regulating and any Safety Blade to 40 Units ..... _____

7.2.5.6.2 **ROTATE** Safety Channel 2 Trip Test, at 125%: "SAFETY 2" Scram On, "DUMP VALVE" On, Lower Half "PRI COOLANT" On, "COOLANT PUMP," "COOLANT FLOW," "COOLANT LEVEL" Scram Lights On, "ON" Lights Out, "DOWN" Lights On .... _____

7.2.5.6.3 **RETURN** Safety 2 Trip Test Switch to OFF ..... _____

7.2.5.6.4 Secondary Cooling Status (ON/OFF) ..... _____

7.2.5.6.5 **SECURE** Console Magnet Power Key ..... _____

7.2.5.6.6 **SECURE** Log/Lin Recorder Drive, **LIFT** Pens ..... _____

7.2.5.6.7 **IF** PuBe Source In, **CHECK** Red Light On, Sign on Display ..... _____

7.2.5.6.8 **MARK** Control Room Charts with Time/Date ..... _____

Complete Records

7.2.6.1.1 **RECORD** Operator/Trainees _____

7.2.6.1.2 **RECORD** Completion Time/Date _____

7.2.6.1.3 **RECORD** Discrepancies (use reverse side as needed) _____

7.2.6.2.1 **RECORD** Operator (in Operations Log) ..... _____

7.2.6.2.2 **RECORD** Time Checkout was Begun, Time and Date Completed (in Operations Log)..... _____

7.2.6.2.3 **RECORD** Comments (in Operations Log) ..... _____

7.2.6.4 **CHECK** "FPH THIS MONTH," "FPH THIS SHEET" (in Operations Log); **IF** necessary, **CONTACT** Reactor Manager ..... _____

REV 16, 2/97
TCN: 6/99
TCN: 3/01

Figure 12-3 UFTR Daily Pre-Operational Checkout List (Example)

UFTR FORM SOP-A.1A
WEEKLY PRE-OPERATIONAL CHECKOUT LIST

DATE START: _____

7.1 **RECORD** Start Time ..... _____*

7.1.1 **STOP** Core Vent/Stack Dilute Fans ..... _____

7.1.2.1 **CHECK** Dilute Fan Drive Belts ..... _____

7.1.2.2 **CHECK** Motor/Fan Bearing Temps ..... _____

7.1.2.3 **CHECK** Blower-Stack Coupling ..... _____

7.1.2.4 **CHECK** Direct Reading Tachometer ..... _____

7.1.3 **CHECK** Blade Drive Gear Box Oil ..... _____

7.1.4 **CHECK** Manometers/Magnehelic Zero ..... _____

7.1.5 **SOURCE CHECK** Portal Monitor ..... _____

7.1.6.1 **CHECK** Vent/Dilute Fan Interlock ..... _____

7.1.6.2 **START** Stack Dilute Fan ..... _____*

7.1.6.3.1 **VERIFY** Delay Fan Start to Flow ..... _____
or
7.1.6.3.2 **OBSERVE** Slow Opening Vent Damper ..... _____

7.1.6.4 **RECORD** D/P
- Rough Filter ..... _____*
- Absolute Filter ..... _____*
- Vent Flow ..... _____*

7.1.7 **START** Shield Water Recirculation Pump ..... _____

7.1.8 **START** Demineralizer Pump ..... _____

7.1.9 **RESET** Magnet Power (requires authorization) ..... _____

7.1.10 **CHECK** "REACTOR ON" Lights ..... _____

7.1.11 **START** Log/Linear Recorder ..... _____

7.1.12 **START** PC Pump, **RECORD** Flow ..... _____*

7.1.13.1 **CHECK** Source Alarm ..... _____

7.1.14.1 **SET** Compensating Temp ..... _____

7.1.14.2 **CHECK** Demin. Inlet Resistivity ..... _____*

7.1.14.3 **CHECK** Demin. Outlet Resistivity ..... _____*

7.1.15.1 **MEASURE AND RECORD:**

	Blade Position Full In	Blade Position Full Out	Withdrawal Time to Full Out
S-1	_____	_____	_____
S-2	_____	_____	_____
S-3	_____	_____	_____
Regulating	_____	_____	_____

7.1.16 **DUMP** Primary Coolant ..... _____

7.1.17 **SECURE** Console Magnet Power Key ..... _____

7.1.18 **SECURE** Temperature-Log/Linear Recorders ..... _____

7.1.19.1.1 **REMOVE** Pit Shielding ..... _____

7.1.19.1.4 **RECORD** Survey Instrument/Serial Number ..... _____*/_____*

7.1.19.1.6 **ENTER** Equipment Pit ..... _____

7.1.19.2.1 **CHECK** Primary Coolant Tank Gamma Rad Level ..... _____*

7.1.19.2.2 **CHECK** Core Vent Filters Gamma Radiation Level ..... _____*

7.1.19.2.3 **CHECK** Demin. Gamma Radiation Level ..... _____*

7.1.19.3 **CHECK** Pit Alarm ..... _____

7.1.19.4 **OBTAIN** Water Samples (Primary Coolant, Secondary Heat Exchanger, Secondary Sample Tank) ..... _____

7.1.19.5 **CHECK** Demin. Flow ..... _____*

7.1.19.6 **CHECK** Rupture Disk ..... _____

7.1.19.7 **CHECK** Dump Valve ..... _____

7.1.19.8 **CHECK** Storage Tank Level (20" min) ..... _____*

7.1.19.9 **PERFORM** Pit Swipe Survey ..... _____

7.1.20.2 **CHECK** PC Resistivity from Grab Sample ..... _____*

7.1.20.3 **DELIVER** Remaining PC Sample to Radcon ..... _____

7.1.20.5 **CHECK** Shield Tank Sample Resistivity ..... _____*

7.1.20.6 **DELIVER** Shield Tank Sample to Radcon ..... _____

7.1.20.7 **DELIVER** Heat Exch. Sample to Radcon ..... _____

7.1.20.8 **DELIVER** Sec. Samp. Tank Sample to Radcon ..... _____

7.1.21.1 **CHANGE** APD Filter Paper (AIM-3BL/AMS^4) ..... _____/_____

7.1.21.2.1 **CHECK** APD Alarm (AIM-3BL) ..... _____

7.1.21.2.2 **CHECK** APD Air Flow (AIM-3BL) ..... _____*

7.1.21.3.1 **CHECK** APD Inputs/Outputs (AMS^4) ..... _____

7.1.21.3.2 **CHECK** APD Air Flow (AMS^4) ..... _____*

7.1.21.4 **CHECK** APD Recorders Operation(AIM-3BL/AMS^4) ... _____/_____

7.1.22.1.1 **CHECK** Stack Alarm (Aux Alarm Panel) ..... _____

7.1.22.1.2 **CHECK** Stack Alarm (Rad Mon Console) ..... _____

7.1.22.2 **PLACE** Siren in Bypass, **SOURCE CHECK** Area Monitors:

	East	North	South	
Trip 2	_____	_____	_____	mR/Hr
Trip 1	_____	_____	_____	mR/Hr

7.1.22.3 **CHECK** Coincidence Circuitry/Red Flashing Light ..... _____
TEST Siren in Automatic Mode ..... _____
CHECK Siren/Ventilation Interlock ..... _____

7.1.22.4 **TEST** Siren in Manual Mode ..... _____
OBSERVE Evacuation Siren Indicator (Constant Red Light) ..... _____

7.1.22.5 **RESET** Fans/Air Conditioner ..... _____

7.1.23 **CLEAN** Secondary Strainer ..... _____

7.1.24 **CHECK** Security System Operation ..... _____

7.1.25.1.1 **RECORD** Operator/Trainees .. _____

_____

7.1.25.1.2 **RECORD** Completion Time/Date .. _____

7.1.25.1.3 **RECORD** Discrepancies (use reverse side as needed) ... _____

_____

7.1.25.2.1 **RECORD** Operator/Trainees (Daily OPS Log) ..... _____

7.1.25.2.2 **RECORD** Completion Time/Date (Daily OPS Log) ..... _____

7.1.25.2.3 **RECORD** Comments (Daily OPS Log) SAT/UNSAT ... _____

REV 16, 2/97
TCN: 8/98
TCN: 2/02

Figure 12-4 UFTR Weekly Pre-Operational Checkout List (Example)

References

1. *Charter of the Reactor Safety Review Subcommittee for the University of Florida Training Reactor*, University of Florida.
2. NRC, US Nuclear Regulatory Commission, *Regulatory Guide 2.5, Revision 0-12*. May, 1977.

CHAPTER 13

ACCIDENT ANALYSES

Table of Contents

Index of Tables

Index of Figures

Index of Appendices

13 Accident Analysis

This chapter addresses the evaluation of safety of the UFTR facility to include analyses of the response of the facility to postulated disturbances in process variables and to postulated malfunctions or equipment failures. **The analysis presented in this Chapter is essentially the same as the one presented in the Final Safety Analysis Report, 1981[1], since no significant changes were implemented in the UFTR facility that would lead to a change in the accident scenarios.**

The UFTR structures, systems and components important to safety have been presented and evaluated for their susceptibility to malfunctions and failures in previous chapters. In this chapter, the effects of anticipated process disturbances and postulated component failures are examined to determine their consequences and to evaluate the capability built into the UFTR facility to control or accommodate such failures and situations and/or to identify the limitations of expected performance.

The situations analyzed and results presented in Section 13.1 and 13.2 along with the Appendices to this Chapter are similar to those presented in the original UFTR Hazards Summary[2] and the Final safety Analysis Report [1]submitted for the relicensing of the facility in 1982, addressing generic safety-related issues for Argonaut-type reactors and are repeated here with few but appropriate changes to account for the UFTR facility as it currently exists. This chapter concludes with Section 13.3, which contains an assessment of radiation doses applicable for a Maximum Hypothetical Accident, which has an assumed fission product release whose potential hazards, are not near to being exceeded by those from any accident considered credible for the Argonaut-type UFTR reactor facility[3].

13.1 Accident-Initiating Events and Scenarios

The effects of anticipated transients, accidents and postulated failures are presented in this chapter. The predicted consequences of such events are determined and the capability of the UFTR facility to control or accommodate such failures and related situations is evaluated. As a result of this accident analysis, the system performance characteristics and limitations are identified for the UFTR facility.

Several accident categories are considered in this analysis to include nuclear excursions during UFTR operation, loss of coolant accident during full power operation, safety control blade system malfunctions and possible release of fission products associated with reactor malfunction. The analysis presented in Sections 13.1 and 13.2 is based primarily upon the contents of the original UFTR Safety Analysis Report (Hazards Summary)[2]. There are no substantive changes in these chapters from the original Hazards Summary Report. Finally, the predicted dose associated with analysis of the so-called Maximum Hypothetical Accident, resulting in a larger release of radioactivity is

presented in Section 13.3. This last analysis is based upon more recent data and calculations.

13.1.1 Nuclear Excursions

13.1.1.1 Nuclear Excursions During Operation

It is difficult to visualize any circumstances which would result in a reactivity increase of a magnitude sufficient to cause serious degradation of the UFTR core. The design of the cooling system insures that the temperature of the reactor cannot be changed suddenly by the introduction of cold water. The maximum excursion which would occur with the normal fuel loading would result from the sudden insertion of all the available excess reactivity; $\cong 1.0\%\ \Delta k/k$ available currently. **A maximum excess reactivity allowed to be loaded is 2.3 %Δk/k**. Only two (2) methods are considered possible for loading such an excess reactivity; first considerable excess reactivity could be reached by having the reactor temperature lowered to the freezing point of water; second, the maximum excess reactivity could be reached by violation of the standard operating procedures.

The first method for insertion of maximum excess reactivity by reduction of reactor temperatures to the freezing point is not considered feasible or plausible, not only because of the building and climate involved but also because of the time element that would be required during which some abnormalities would be noted. As explained in the original UFTR Hazards Summary Report, the second method for insertion of maximum excess reactivity would be by a violation of the standard operating procedures (SOPs) which is a possibility[2].

The Hazards Summary addresses two possible violations of SOPs by which the maximum excess radioactivity in the UFTR could be achieved. The first violation involves loading a sample into the reactor with sufficient absorption properties to prevent startup or reaching criticality regardless of the amount of control blade withdrawal. If the control blades were fully withdrawn in this situation and criticality were not achieved, the maximum reactivity could be added if the sample were then removed without reinserting the control blades.

The other possible, although extremely unlikely, manner by which the maximum excess reactivity can be inserted would be by purposely bypassing the Reactor Control and Safety System interlocks and trips and subsequently withdrawing the blades in violation of the Technical Specifications and the Standard Operating Procedures.

If all the circuits of the Reactor Protection System were to fail or be incapacitated, the power level would continue to rise until the available excess reactivity were overcome by the temperature and void coefficients characteristic of the present reactor configuration.

As a result of studies made for the original Hazards Summary [2] concerning the effects of a large reactivity addition in the UFTR during 100 kWth operation, it was also determined that the required power excursion in order to raise the temperature of the fuel plates to the melting point of aluminum (1220°F) involves energy generation of 32 MW-sec, as explained in Appendix 13-A [4]. The corresponding exponential period for this excursion is 8.3 milliseconds; therefore, the UFTR will tolerate a power excursion with a period at least as short as 8.3 milliseconds without melting any part of any fuel plate. The excess reactivity corresponding to such a period is 2.4% $\Delta k/k$; however, the UFTR has licensed excess reactivity of only 2.3% $\Delta k/k$ available. Because of strict control of all fuel not in the reactor, and the loading controls, it is considered very unlikely that any significantly larger amount of reactivity would ever be available. All fuel-plate spaces provided in the reactor are filled with fuel plates or dummy aluminum plates. Therefore, a major increase of fuel loading would require either disassembly and reassembly of the fuel bundles or the presence of a large supply of enriched uranium in some other form. Neither possibility is considered credible.

A further comparison of the effects of rapid reactivity insertion in research reactors versus the UFTR is contained in Appendix 13-B based upon analysis in the original UFTR Hazards Summary Report [2].

The results presented above are very conservative. Report NUREG/CR-2079, Analysis of Credible Accidents for Argonaut Reactors [5] which applies more recent data (SPERT I destructive results) shows that a nuclear excursion resulting from the rapid insertion of a maximum available excess of reactivity (2.6 % $\Delta k/k$) would produce only 12 MWs which is insufficient to cause fuel melting even with conservative assumptions.

13.1.1.2 Nuclear Excursions During Fuel Loading

A nuclear excursion during fuel loading is not considered credible. Fuel loading at the UFTR is required very infrequently, usually when loss of reactivity from burn up makes it necessary to add additional plates. At such times, dummy fuel plates or old fuel plates in the chosen fuel bundle can be replaced. During fuel loading and unloading operations only qualified reactor operators and personnel are involved under the supervision of the Reactor Manager or **a designated senior reactor operator**. The limitations and procedures to be followed are explained in detail in the C-series of the UFTR SOPs "Fuel Handling Procedures." The excess reactivity will be limited to 2.3% $\Delta k/k$ by adjustment of the core loading. Any additional fuel plates are kept in a secured, criticality safe storage as described in Chapter 9 of this SAR and in the UFTR Security Plan submitted separately.

Additional fuel plates can be forced down into the fuel boxes between the bundles due to the existing clearances necessary for the removal of fuel bundles and

manufacturing tolerances. However, all fuel plates not required for the reactor loading are locked in the safe, which is accessible only to the Director of Nuclear Facilities and/or the Reactor Manager. The probability of misloading the reactor by forcing extra plates into these spaces is considered to be extremely small [2]. **In addition the restrictive clearances make such insertions very difficult.** Therefore, it is concluded that a nuclear excursion during fuel loading is unlikely.

13.1.2 Safety-Control Blade System Malfunctions

Each control blade in the UFTR control blade drive system is moved by a two phase fractional horsepower motor that operates through a reduction gear train, and an electrically energized magnetic clutch that transmits a motor torque through the control blade shaft, allowing motion of the control blades. The blades are sustained in a raised position by means of this motor, acting through the electromagnetic clutch. Interruption of the magnet current results in a decoupling of the motor drive from the blade drive shaft, causing the blades to fall back into the core in a failsafe arrangement. In case of a loss of power, a manual scram, or any scram signal from the instrumentation system, the electromagnets are de-energized and the system fails safe by gravity dropping of the blades into the core.

The blade withdrawal inhibit system is part of the Reactor Protection System. The multiple blade withdrawal interlock prevents exceeding the reactivity addition rate of 0.06% $\Delta k/k$ per second, as specified in the UFTR Technical Specifications. The fast period blade withdrawal interlock prevents establishing a period shorter than 10 seconds by blade withdrawal.

The safety blades each control from about **1.2% to 2.3% $\Delta k/k$ in** reactivity. The only way in which the rods could fail to fall into the reactor during a reactor scram would be through either failure of the circuits to de-energize the electromagnetic coupling, or a **mechanical failure of the blade drives or jamming in the shroud.** The operator can manually scram the reactor or turn off the power in the case of circuit malfunction. In the event of blade jamming, or combined circuit and operator failure, the reactor is shut down by the inherent shutdown mechanisms described in Chapter 4 and by the water dump trip acting as a back-up shutdown mechanism. Additional back up for reactor shutdown is provided by the dumping of moderator/coolant via the rupture disk.

Since the two nuclear safety power channels are completely independent, failure of all scram circuitry is very unlikely. A short-period scram is provided on the log channel and high-power level trips are provided in both channels. The UFTR SOPs and Technical Specifications require the testing of the instruments and scrams every operating day to insure their proper operation prior to reactor startup. The reactor key is available only to UFTR licensed reactor operators. The reactor key is used to turn the console power on and energize the magnets for control blade motion.

In the event of a malfunction in the control blade drive system, the operator can initiate a reactor scram; even if the operator fails to recognize a malfunction, a scram occurs automatically whenever a power level increase above the present trip limits (125 kW) is caused by the malfunction. This response is described in Chapter 7 and specified in the Technical Specifications. No single failure or malfunction related to the magnets, limit switches, gear reducers, motors, or instrumentation could prevent all of the blades from dropping into the core after de-energizing the magnets.

13.1.3 Loss of Coolant Accident

The UFTR Reactor Protection System is discussed in Chapter 7 and provides a series of interlocks and trips preventing operation in the case of primary and/or secondary cooling systems malfunction. Interlocks are provided to prevent operation when the coolant is not circulating or when the level is outside the preset limits. Reactor blade-drop trips are provided for the primary coolant pump power and flow. Redundancy is provided through the reactor core water level trip. Inherent protection is provided by the negative moderator temperature and void coefficients of reactivity. No credible circumstances are envisioned where mishandling of the cooling system can give rise to a power excursion. Studies have been performed by Wagner to analyze the effects of a Loss of Coolant Accident (LOCA) at various hypothetical power levels up to 625 kWth as addressed in Appendix 13C [6]. It should be noted that the UFTR will shut itself down due to the negative moderator void coefficient; therefore, insertion of the control blades is not a physical requirement for reactor shutdown when **voids are generated**. Wagner investigated the increase in fuel temperature following a loss of coolant and shutdown of the reactor either by the negative void coefficient of reactivity or by the insertion of the control blades into the reactor. Wagner's work is summarized in Appendix 13C and shows that the fuel temperature would increase about 30°F following a water dump trip event. Figure 13-1 shows the calculated fuel temperature as a function of time after reactor shutdown due to decay heating effects following dump scram from equilibrium UFTR operation at 625 kWth power level.

This analysis demonstrates that even if the calculations described by Wagner are in error by as much as 200%, the maximum fuel plate temperature rise will not approach temperatures of **even** half the melting point of aluminum for power levels much larger than present UFTR operation; therefore, a LOCA is not considered to represent a hazard to the UFTR core fuel or structural integrity.

Experimental verification of the decay heat equation governing decay heat generation in the UFTR following reactor shutdown is provided in Appendix 15D, also taken from Wagner's work [6].

13.2 Fission Product Release and Dose Assessment

The UFTR is designed to operate at a rated power of 100 kWth. The analysis discussed in Section 13.1 indicates that a very low probability of fuel melting in case of an excursion resulting from the sudden insertion of as much as 2.4% $\Delta k/k$ along with the failure of the reactor control and protection systems. Therefore, significant releases of fission products are not considered plausible because of the inherent self-limiting characteristics of the UFTR. If a reactivity accident is assumed to occur and to cause the fuel plates to melt, a release of fission products may take place. In this regard, some exposure studies were presented in the original UFTR Hazards Summary Report [2]. Later analysis by Listing [4] also assumed a release of 10% of the volatile fission products from the reactor fuel plates into the building air in agreement with the Hazards Summary as indicated in Appendix 13E.

13.3 Radiation Doses for the Maximum Hypothetical Accident

13.3.1 Methodology

The analytical methods used to predict radiation doses following a Maximum Hypothetical Accident at the UFTR facility are summarized in this section. The methodology presented includes basic equations and theory as well as basic input data and information for the calculations such as the equilibrium radioactive monitoring diffusion coefficients, release fractions from the fuel and hypothetical transport of the released nuclides.

13.3.1.1 Introduction to Basic Dose Calculations

The radioisotopes of greatest significance in case of an accident and consequently the only ones specifically addressed in the Nuclear Regulatory Commission Regulatory Guides are the noble gases and the radioiodines. The noble gases contribute solely by means of the immersion dose, and the radioiodines contribute primarily to the thyroid dose through inhalation. Equation 13-1 and 13-2 were applied to calculate the whole body dose and the thyroid dose [3].

Whole Body Dose:

$$D_\gamma = \chi / Q \cdot (\Sigma_i \, Q_i \cdot DF_{\gamma i}) \qquad \textbf{Equation 13-1}$$

Thyroid Dose:

$$D_T = \chi / Q \cdot BR \cdot (\Sigma_j Q_j \cdot DFT_j) \qquad \textbf{Equation 13-2}$$

where symbols utilized in these equations are defined as follows:

D_j = whole body dose (rem);
χ/Q = atmospheric diffusion coefficient (sec/m^3);
Q_i = release to the atmosphere of noble gas type "i" (Ci);
$DF_{\gamma i}$ = dose conversion factor for whole body dose from noble gas type "i" (rem-m^3/Ci-sec);
D_T = dose to thyroid (rem);
BR = breathing rate (m^3/sec);
Q_j = release to the atmosphere from radioiodine type "j" (Ci);
DFT_j = thyroid dose conversion factor for radioiodine type "j" (rem/Ci).

13.3.1.2 Equilibrium UFTR Radioactivity Inventory

The computer code RIBD (Radio Isotope Buildup and Decay, Reference [7])was applied to calculate the isotopic concentration from a fission source, taking into consideration the beta decay, the isomeric transitions, and the (n, γ) reactions. The fission source in this case is the UFTR core operated at full power to equilibrium radioactive inventory.

The input for RIBD consists of the average thermal flux in the fuel, the operation history in selected time steps of constant power, the energy released per fission and the desired times after shutdown at which the activities of the different isotopes are calculated. The output includes the activities at shutdown and at the specified times afterward for various isotopes. The primary radioisotopes of interest in this safety analysis are the iodines (especially I-131), and the noble gases represented by various krypton and xenon radioisotopes.

For the equilibrium UFTR inventory calculations at 100 kWth power with 93% enriched fuel, input to the RIBD code consisted of the average thermal neutron flux in the fuel (1.0 x 10^{12}n/cm^2/sec), full rated UFTR power level (100 kWth) and total irradiation time (30 days). The average thermal flux in the fuel was obtained assuming the highly enriched fuel during full power operation at 100 kWth. [8] The equilibrium inventories calculated using the RIBD code for important radioisotopes for equilibrium operation of the 93% enriched fuel in the UFTR at 100 kWth are presented in Table 13-1.

RIBD calculations were also run to verify that equilibrium radioisotope inventories are practically reached in a period of thirty days. However, the UFTR usually operates continuously for periods of only a few hours, generally due to its use for training purposes and for performing experiments with short irradiation times. Because of this limited operation, several runs of RIBD were performed using cycles defined as 8 hours

of full power operation followed by 16 hours of shutdown to verify that the "equilibrium" UFTR radioactive inventory is reduced for such cyclic operation. For such cyclic operation, smaller values of radioactive inventories are expected. The expected reduced inventories arise because there is not as large a contribution from the precursors; the inventory for the cyclic operation has decayed during the shutdown period. For example, the I-131 inventory for a 4 cycle run of 8 hours on and 16 hours off is 94% of the "equivalent" continuous case, while the inventory of I-133 is only about 60% of the "equivalent" continuous case. These two iodine isotopes constitute the most important radionuclides of concern here for the dose assessment and the inventory reduction associated with cyclic operation is significant.

13.3.1.3 Diffusion Coefficients for the Design Basis Accident

As presented in Chapter 2 of this Safety Analysis Report, two conservative approaches are recommended by the NRC in Regulatory Guide 1.111 for determining diffusion coefficients. [9] The more conservative model uses generic (NRC) meteorological conditions; the other method uses local meteorological conditions and is less conservative since credit for increased diffusion is possible in some regions. Both methods were used to compute diffusion coefficients for input to radiation dose calculations performed Maximum Hypothetical Accidents in the UFTR.

13.3.1.4 Fuel Release Fractions for the UFTR

In this study, it was conservatively assumed that 25% of the radioiodines and 100% of the noble gases were released from the failed fuel into the reactor cell as recommended by the NRC through ANSI/ANS-15.7 Standard [10] and Regulatory Guide 1.111 [9]. The percentage of failed fuel was assumed to be 100% for the dose calculations considered here. This 100% failure is the common assumption used by the NRC in the evaluation of the radiation doses for the Loss of Coolant Accident associated with commercial Light Water Reactors as proposed in Regulatory Guide 1.4 [11] and claimed in the Palo Verde PSAR [12]. However, this 100% failure assumption is not made explicitly in the standard (ANSI/ANS-15.7) applicable to Test and Research Reactors for which smaller percentages are allowed. In this respect, it is worthwhile to point out that the original "University of Florida Training Reactor Hazards Summary Report" submitted to the Atomic Energy Commission assumed a 10% release of all volatile radionuclides to the reactor cell atmosphere[2].**Therefore, the analysis and results in the following sections are considered to be very conservative**.

13.3.1.5 Transport Model for Released Radionuclides

Assuming that the reactor cell ventilation stops after the accident has occurred, the transport model for radionuclides consists of two compartments: the reactor cell and

the environs. The reactor cell radioisotope inventory, $N_i(t)$, is lost by decay and by leakage to the environs; the environs in turn lose radioisotopes only by decay. The initial number of atoms of radioisotope "i" present in the reactor cell is represented by:

$$N_{io} = f_i I_{io} \qquad \textbf{Equation 13-3}$$

where:

I_{io} = initial inventory of nuclide atoms of type "i"
f_i = fraction of type "i" atoms released from the fuel.

Given the two-compartment model presented above, the total number of atoms of the nuclide "i" present in the reactor cell is governed by the following differential equation:

$$\frac{dN_i}{dt}(t) = -(\lambda_i + L)N_i(t) \qquad \textbf{Equation 13-4}$$

where:

λ_i = radioactive decay constant for nuclide "i" (1/sec);
$N_i(t)$ = number of atoms of nuclide "i" in the cell at time t;
L = fractional leak rate from the cell (1/sec).

The solution for Equation (13-4) is a simple exponential as follows:

$$N_i(t) = f_i I_{io} \exp[-(\lambda_i + L)t] \qquad \textbf{Equation 13-5}$$

so the number of atoms which escape to the environs per unit time, $E_i(t)$, is given by a similar exponential as follows:

$$E_i(t) = L f_i I_{io} \exp[-(\lambda_i + L)t] \qquad \textbf{Equation 13-6}$$

The total number of atoms which have escaped in the time interval running from $t = T_1$ to $t = T_2$ is then given by the following time-integrated expression:

$$E_i(t) = \frac{L f_i I_{io}}{\lambda_i + L}\left[\exp[-(\lambda_i + L)T_1] - \exp[-(\lambda_i + L)T_2]\right] \qquad \textbf{Equation 13-7}$$

From this expression for the release of radionuclide "i", the activity (Ci) released in the time interval between T_1 and T_2 is then given by $\lambda_i E_i(t)$ so that the activity released for

nuclide "i" is directly related to the initial inventory of the radioactive nuclide "i" as expected. The total activity released can then be determined by summing the corresponding contributions for radionuclides of interest.

13.3.2 Dose Calculations Model Code

The computer code, DORA, was written following the methodology of Section 13.3.1 and then used to calculate the radiation doses for the Maximum Hypothetical Accident (MHA) based upon the model presented in Section 13.3.1 [3]. DORA can be used to evaluate such doses for each time period and for each radioisotope; DORA adds all the individual contributions giving as an output the whole body dose and the thyroid dose for different time periods. The input for DORA consists of the leak rate from the reactor cell, the Design Basis Accident diffusion coefficients corresponding to four time periods, 0-2 hours, 2 hour-1 day, 1-4 days, and 4-30 days as presented in Chapter 2 of this SAR, and the core inventory of radioactive iodines and noble gases. The thyroid dose conversion factors for the radioiodines and the whole body dose conversion factors for the noble gases are obtained from References [12] and [13]. Both types of dose conversion factors along with the radionuclide decay constants used in DORA are presented in Table 13-2. The DORA library also contains decay constants for the various radionuclides of interest as well as the breathing rates applicable during each period; the applicable breathing rates by period following such a Maximum Hypothetical Accident (MHA) for the UFTR are presented in Table 13-3.

13.3.3 Results of the Maximum Hypothetical Accident Dose Calculations

A sensitivity analysis was performed for the whole body and the thyroid doses, for the periods of 2 hours, 1 day and 30 days. The distance from the vent to the receptor as well as the leak rate were varied for the UFTR operating at 100 kWth full rated power. Cases were examined corresponding to all possible combinations among the four different parameters listed in Table 13-4: receptor distance, time period, reactor building leak rate and type of meteorological conditions. The results calculated for these various site parameters are presented graphically in Figure 13-2 through Figure 13-11 as labeled.

The range for the leak rates from the reactor cell varies from the upper value of 20%/hr, which was the value used in the original UFTR Hazards Summary Report [2] to the lowest value of 0.1%/hr which is about 24 times higher than the design value for typical LWR containment leak rates. **This range is considered reasonable to address possible leak rates since the reactor cell is a confinement, not a containment.** A wide body of standards and regulations exist concerning the determination of the containment leak rates for Power Reactors in the course of an accident. Usually the value incorporated in the Technical Specifications for Power Reactors depends upon the calculated containment peak pressure during the accident and has to be determined in the preoperational tests, in accordance with Appendix J to 10 CFR 50. Although no

equivalent method has been applied for Test and Research Reactors, it is felt that the UFTR reactorcell leak rate following a Maximum Hypothetical Accident should certainly be bounded by these extremes and likely will be on the lower end of this range.

13.3.4 Dose Assessment for the Maximum Hypothetical Accident

It can first be concluded that the doses calculated with the local Gainesville meteorology are almost a factor of 8 smaller than those obtained using the standard meteorological conditions recommended by the NRC [11] which is easily demonstrated by comparing Figure 13-4 with Figure 13-7. This difference is expected since the NRC Standard Conditions are extremely conservative.

The second conclusion drawn from the MHA dose calculation is that there is a considerable reduction, about a factor of 15, when the distance from the receptor to the reactor vent varies from 0.1 to 0.5 miles. Therefore, from this basis, the urban boundary distance placed at 0.5 miles is reasonable.

Finally, analysis of the computer output results used to produce the final dose results indicates that I-131 is the critical radioisotope, which contributes to most thyroid dose through inhalation. The relative significance of the I-131 contribution increases with time due to its longer half-life. As shown in the figures for the MHA dose results, when the leak rate decreases, the time period at which the highest dose is received moves from the first period to later periods. For example, for a 20%/hr leak rate, the highest thyroid dose is received during the first period from 0-2 hours; for a 2%/hr leak rate the highest thyroid dose is received during the second period from 2 hours to 1 day; finally, for a 0.2%/hr leak rate, the highest thyroid dose is received from 1-4 days. Therefore, for more likely leak rates, longer periods are required for peak doses and evacuation would be very possible for such longer periods.

13.3.5 Selection of Site Parameters Based on MHA Dose Results

In regard to Research Reactor Site Evaluation, the ANSI/ANS-15.7-1977 standard presents the following definitions: [10]

a) "Site boundary. The site boundary is that boundary, not necessarily having restrictive barriers, surrounding the operations boundary wherein the reactor administrator may directly initiate emergency activities. The area within the site boundary may be frequented by people unacquainted with the reactor operation."

b) "Urban boundary. The urban boundary means the nearest boundary of a densely populated area or neighborhood containing population of such number or

in such a location that a complete rapid evacuation is difficult or cannot be accomplished within two hours using available resources."

The dose commitment for the "site boundary" is 5 rem to the whole body or 15 rem to any other organ for a two-hour period. The dose commitment for the "urban boundary" is 0.5 rem to the whole body or 1.6 rem to any other organ for a one-day period. For the UFTR case, the dose results presented in Figures 13-2 to 13-11 indicate that the thyroid dose limit is the critical dose as expected. The distances which would comply with the above dose limits for the site and urban boundaries, as a function of the assumed reactor cell leak rate for the UFTR operated at 100 kWth are presented in Table 13-5.

Due to the actual site conditions for the UFTR, the urban boundary distance, according to its definition, can be estimated to be about 0.5 miles which is approximately the distance from the reactor building to Shands Teaching Hospital as indicated on the map presented in Chapter 2 of this SAR, Figure 2-3. This hospital is also the closest facility whose evacuation would be time-consuming in the event of a major radiological emergency at the UFTR. For this urban boundary to meet the dose limits specified in ANSI/ANS-15.7 would require a reactor cell leak rate of 0.5%/hr for UFTR equilibrium operation at 100 kWth. These leak rates are based on the assumption of total fuel meltdown with the associated assumed fractional release of radioiodines and noble gases to the reactor cell atmosphere indicated in Section 13.4.1.4. However, the assumption of total fuel meltdown is unrealistic for the UFTR under any credible accident conditions with current safety requirements. In addition, the UFTR is not likely to operate to equilibrium radionuclide concentrations at 100 kWth power levels. As previously discussed, calculations with the RIBD code indicate that, if the operation is assumed to run in cycles with 8 hours of operation followed by 16 hours of shutdown in each cycle, the equilibrium I-131 inventory is reduced to less than 50% of the equilibrium inventory for continuous operation. Therefore, it is concluded that the high doses resulting from the calculations presented here are extremely conservative and unlikely to occur under any circumstances; and specifying the distance to Shands Hospital complex as the urban boundary is therefore considered both reasonable and very conservative.

Table 13-1 Calculated UFTR Radionuclide Inventory Following Equilibrium Operation At 100 kWth

Radioactive Isotopes	Activity of 93% Enriched UFTR Fuel (curies)
Iodines	
I 131	2.207 E03
I 132	3.577 E03
I 133	5.726 E03
I 134	6.438 E03
I 135	5.356 E03
I 136M	1.682 E03
Kryptons	
Kr 83 M	4.482 E03
Kr 85 M	1.106 E03
Kr 87	2.146 E03
Kr 88	3.032 E03
Kr 89	3.946 E03
Xenons	
Xe 131 M	1.025 E01
Xe 133 M	8.031 E02
Xe 133	5.579 E03
Xe 135	5.571 E03
Xe 135 M	9.235 E02
Xe 138	5.274 E03

Table 13-2 Radionuclide Decay Constants and Dose Conversion Factors

Radionuclide	Decay Constant (1/sec)	Thyroid Dose Conversion Factor (rem/inhaled curie)	Whole Body Dose Conversion Factor (rem-m^3/Ci-sec)
I-131	9.975 E-07	1.48 E06	NA
I-132	8.424 E-05	5.35 E04	NA
I-133	9.255 E-06	4.00 E05	NA
I-134	2.196 E-04	2.50 E04	NA
I-136M	1.444 E-02	1.24 E05	NA
Kr-83M	1.035 E-04	NA	1.045 E-02
Kr-85M	4.297 E-05	NA	3.775 E-02
Kr-87	1.520 E-04	NA	3.437 E-02
Kr-88	9.358 E-07	NA	4.357 E-01
Kr-89	3.655 E-03	NA	5.156 E-01
Xe-131M	6.689 E-07	NA	4.189 E-02
Xe-133M	3.597 E-06	NA	8.250 E-03
Xe-133	1.512 E-06	NA	7.500 E-03
Xe-135	2.099 E-05	NA	6.150 E-02
Xe-135M	7.549 E-04	NA	1.055 E-01
Xe-138	8.133 E-04	NA	7.075 E-01

Table 13-3 Applicable Breathing Rates for Thyroid Dose Calculations

Period	Breathing Rate (m^3/sec)
0-2 hours	3.30 E-04
2-24 hours	2.58 E-04
1-30 days	2.64 E-04

Table 13-4 Parametric Cases Examined for Dose Assessment of Maximum Hypothetical Accident*

Receptor Distance	Time Periods	Reactor Building Leak Rates	Meteorological Conditions
0.1 mi.	0-2 hrs.	20%/hr	Local Conditions
0.2 mi.	1 day	2%/hr	NCR Standard Conditions
0.3 mi.	30 days	0.2%/hr	
0.4 mi.		0.1%/hr	
0.5 mi.			

*These cases all correspond to the equilibrium UFTR inventory for the current design using [ ] enriched fuel at 100 kWth.

Table 13-5 Calculated Size and Urban Boundary Distances to Comply with ANSI/ANS-15.7 – 1977 Dose Limits for UFTR Operation at 100 kWth

Hypothetical Reactor Cell Leak Rate (%/hr)	Site Boundary Distance Required by ANSI/ANS-15.7 (miles)	Urban Boundary Distance Required by ANSI/ANS-15.7 (miles)
20	0.5	>0.5
2	0.15	>0.5
0.5	-	≅ 0.5
0.2	<0.1	0.25
0.1	<0.1	0.18

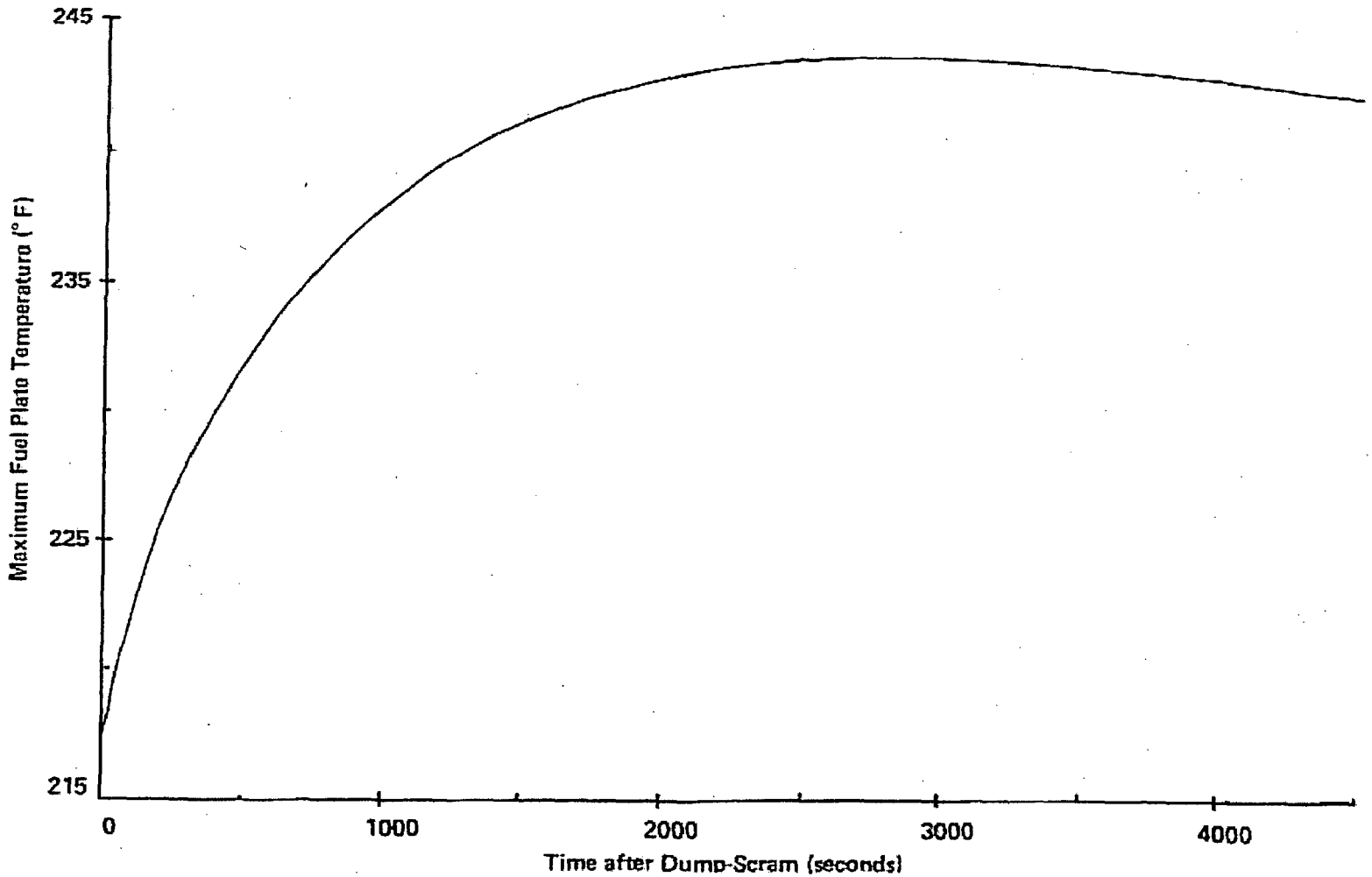

Figure 13-1 Calculated Fuel Plate Temperature Rise due to Decay Heating for Dump-Scram from Equilibrium UFTR Operation at 625 kWth

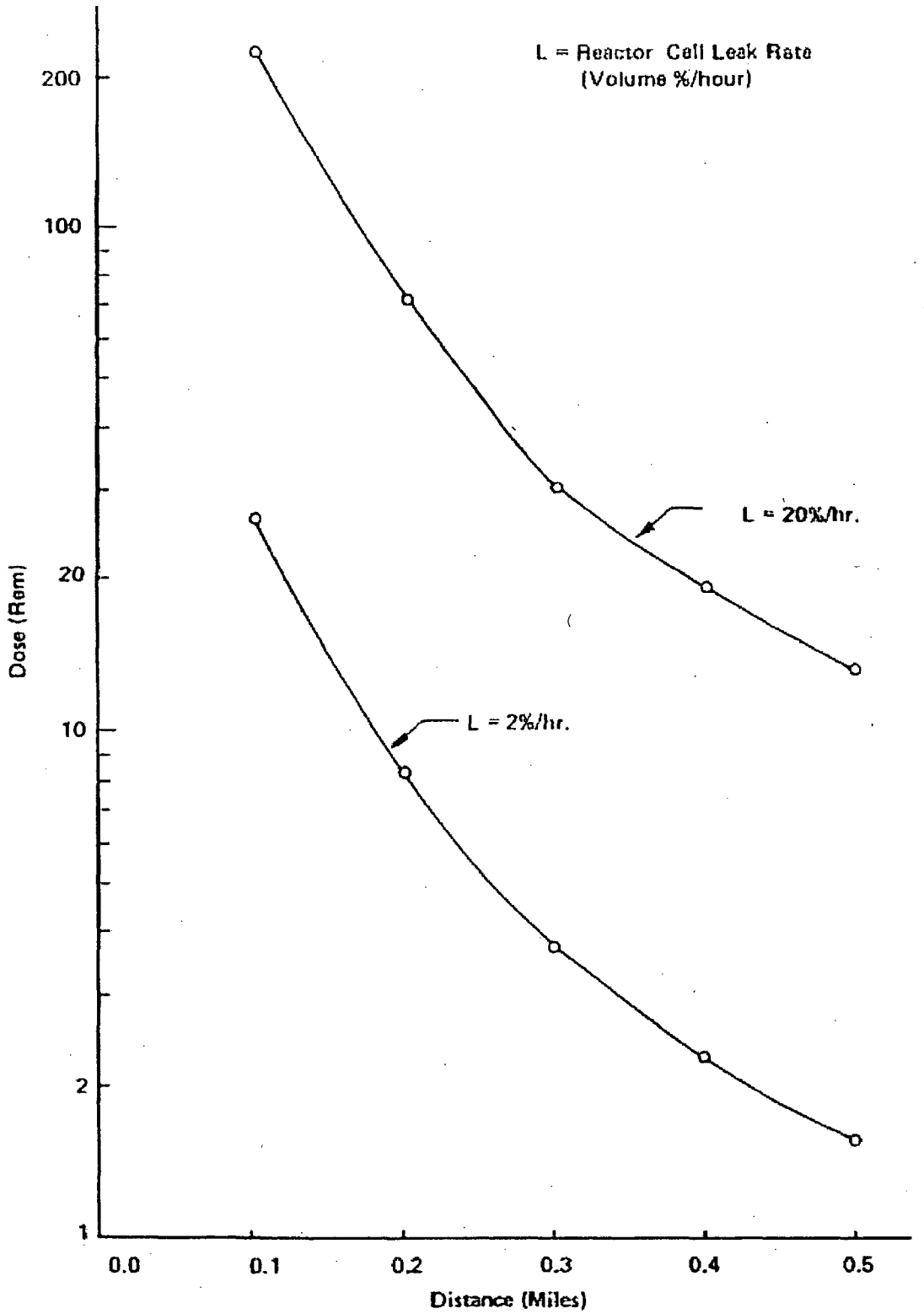

Figure 13-2 Two-Hour Thyroid Dose for UFTR Operation at 100 kWth using Local Meteorology. Reactor Cell Leak Rate L= 2%/h and 20%/h

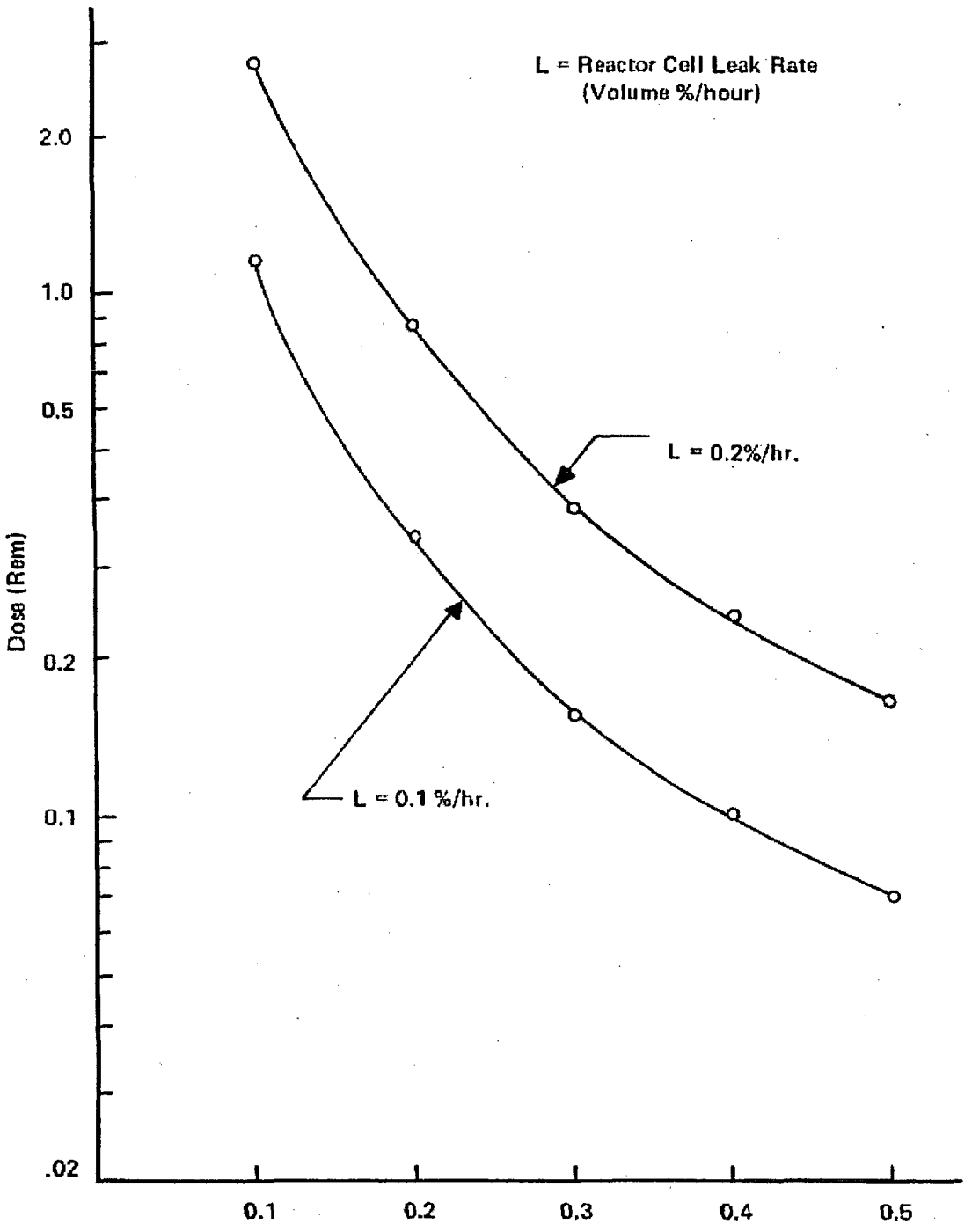

Figure 13-3 Two Hour Thyroid Dose for UFTR Operation at 100 kWth using Local Meteorology. Reactor Cell Leak Rate L=0.1%/h and 0.2%/h.

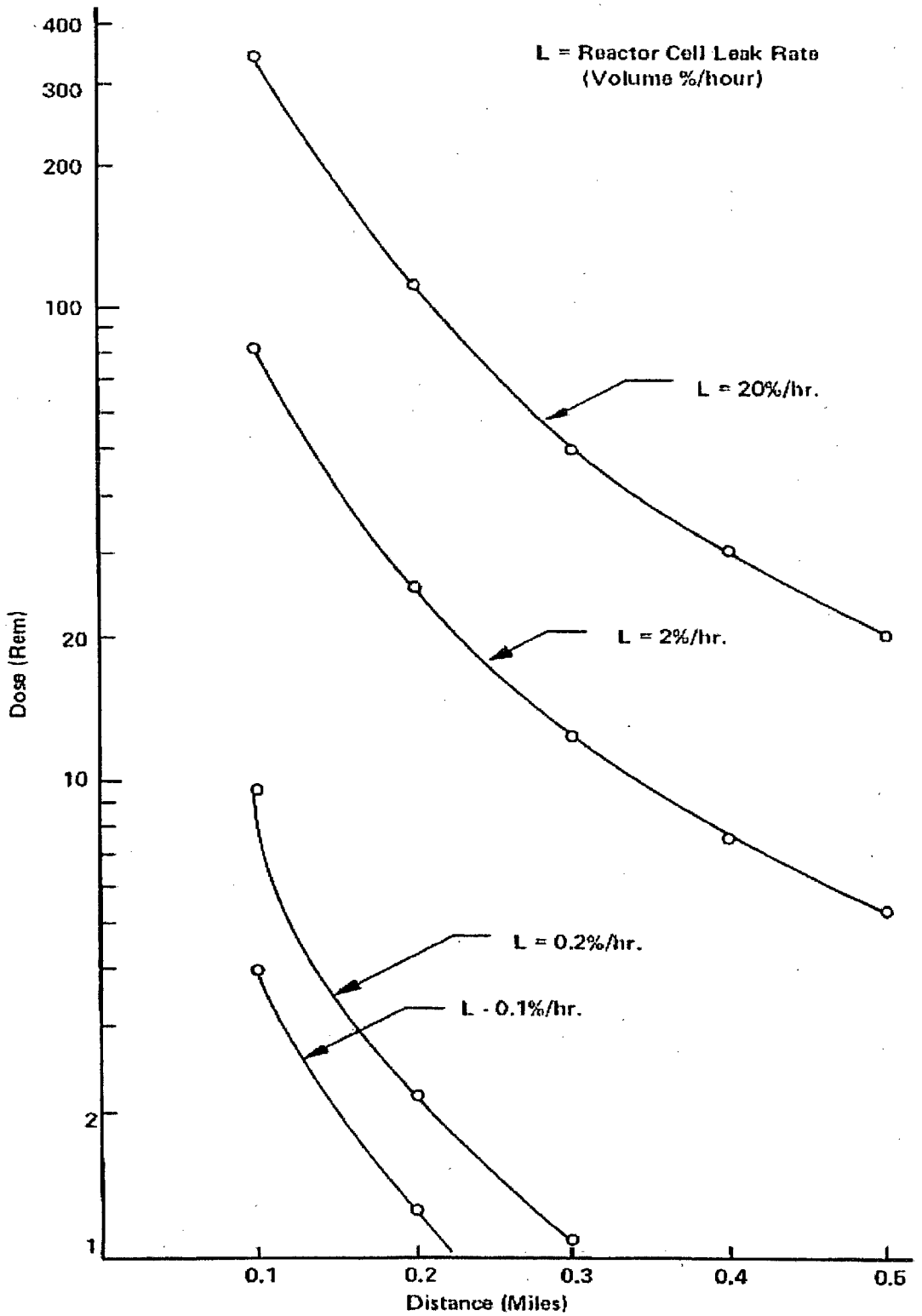

Figure 13-4 One-Day Thyroid Dose for the UFTR Operation at 100 kWth using Local Meteorology. Reactor Cell Leak Rate Varying from 0.1% /h to 20% /h

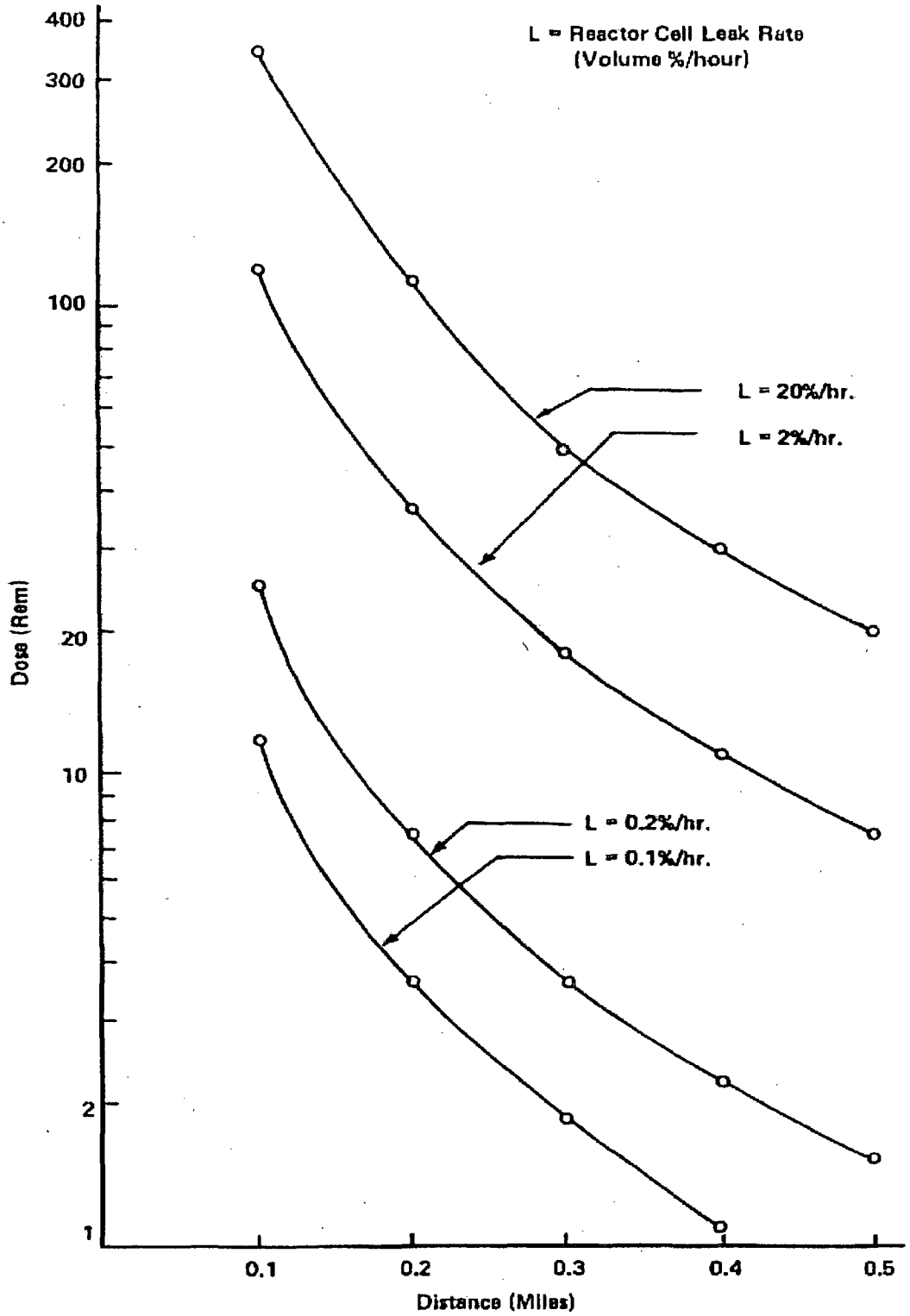

Figure 13-5 Thirty-Day Thyroid Dose for UFTR Operation at 100 kWth Using Local Meteorology. Reactor Cell Leak Rate Varying from 0.1% / h to 20% /h

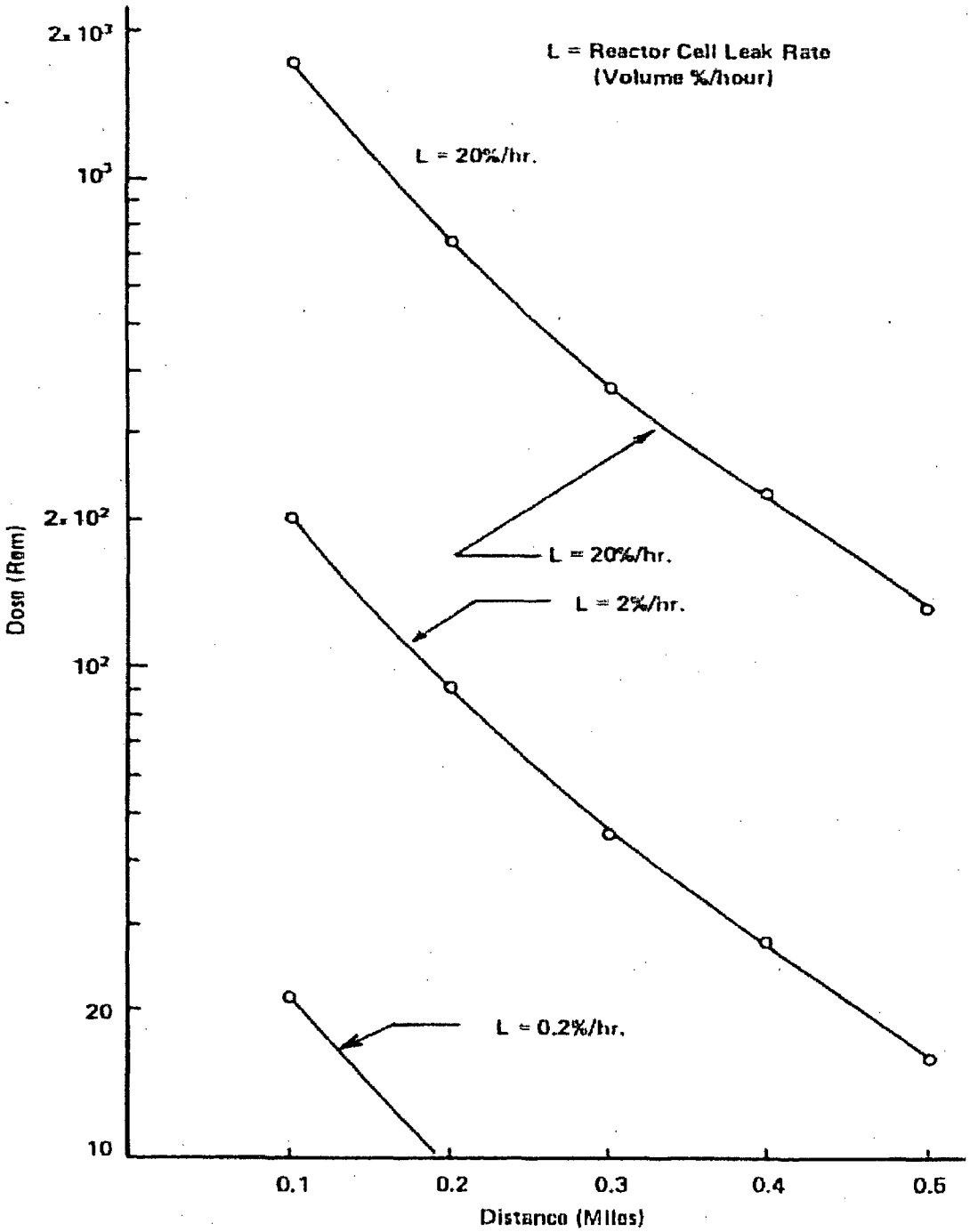

Figure 13-6 Two-Hour Thyroid Dose for UFTR Operation at 100 kWth Using NRC Standard Meteorology. Reactor Cell Leak Rate Varying from 0.2% / h to 20% /h

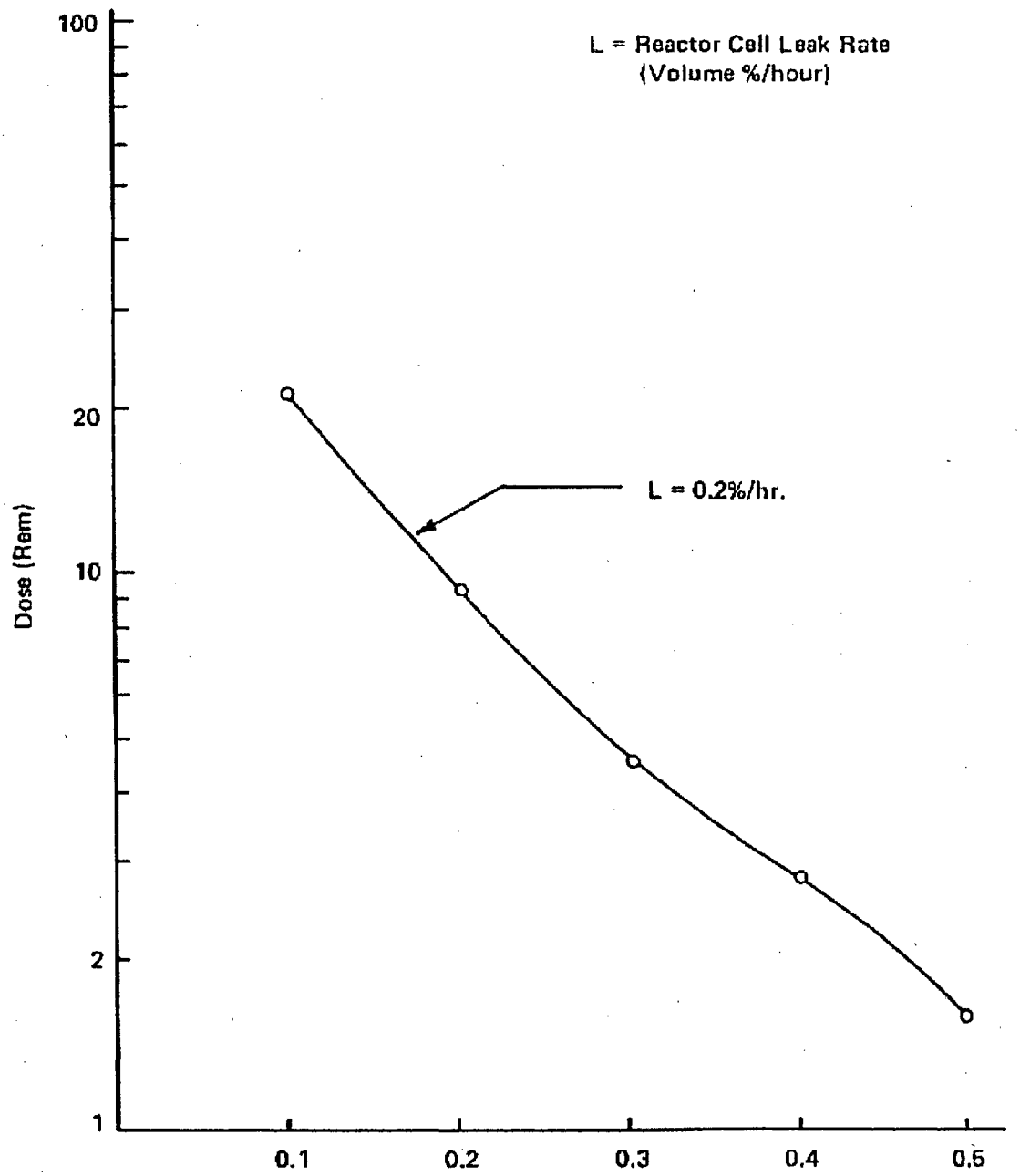

Figure 13-7 Two-Hour Thyroid Dose for UFTR Operation at 100 kWth Using NRC Standard Meteorology. Reactor Cell Leak Rate L = 0.2%/h

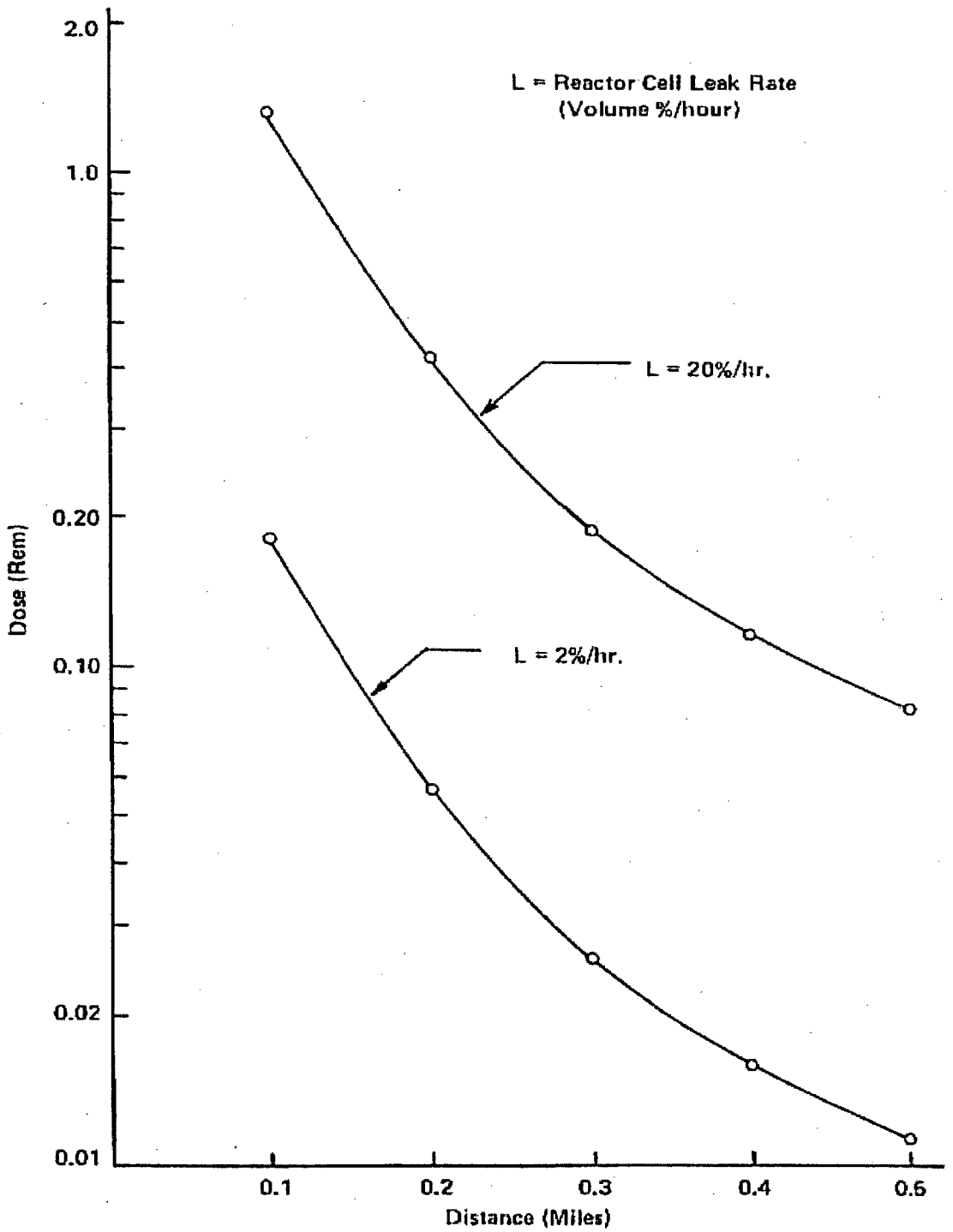

Figure 13-8 Two-Hour Whole Body Dose for UFTR Operation at 100 kWth Using NRC Standard Meteorology. Reactor Cell Leak Rate L=2%/h and 20%/h

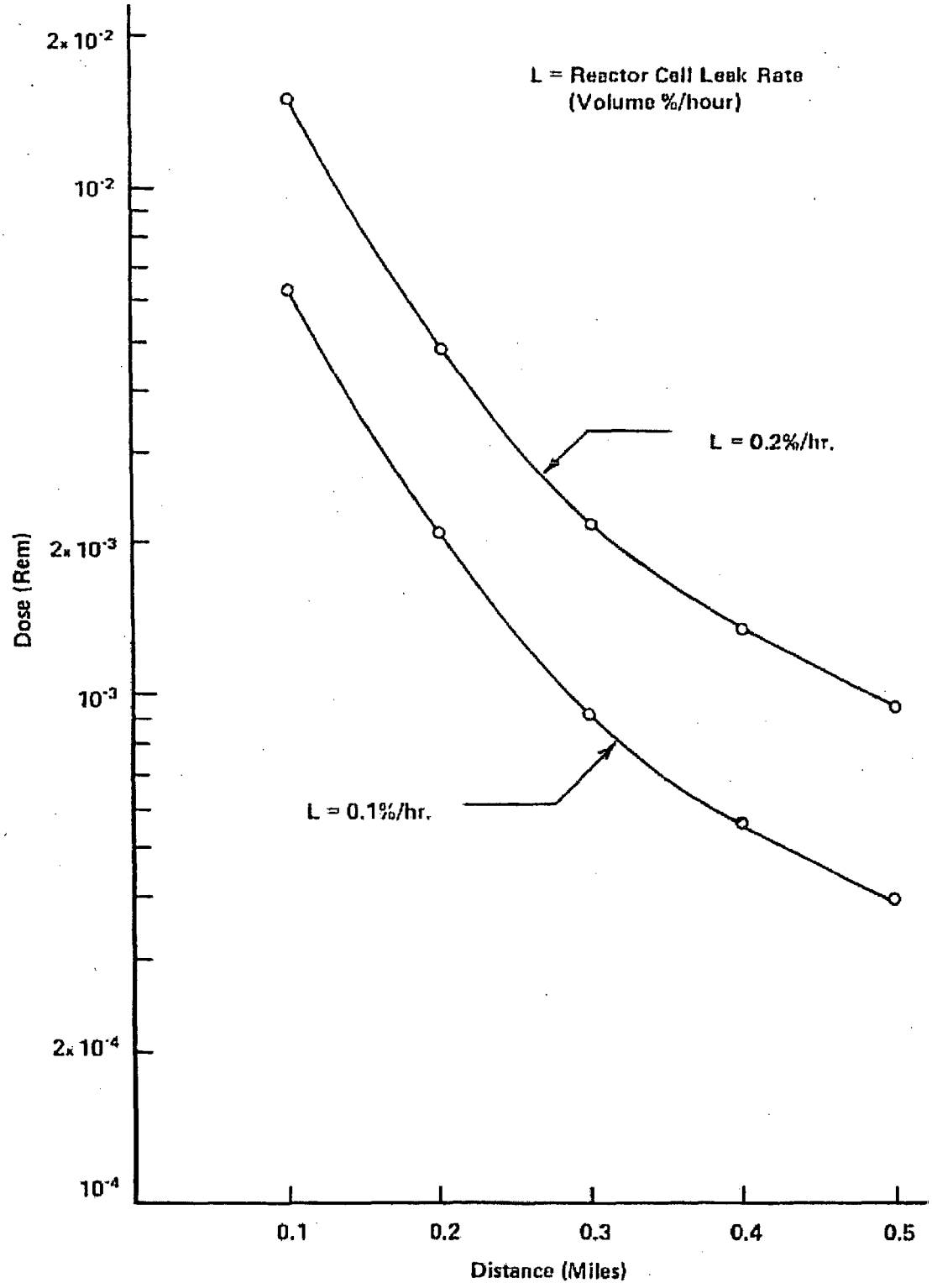

Figure 13-9 Two-Hour Whole Body Dose for UFTR Operation at 100 kWth Using Local Meteorology. . Reactor Cell Leak Rate L=0.1%/h and 0.2%/h

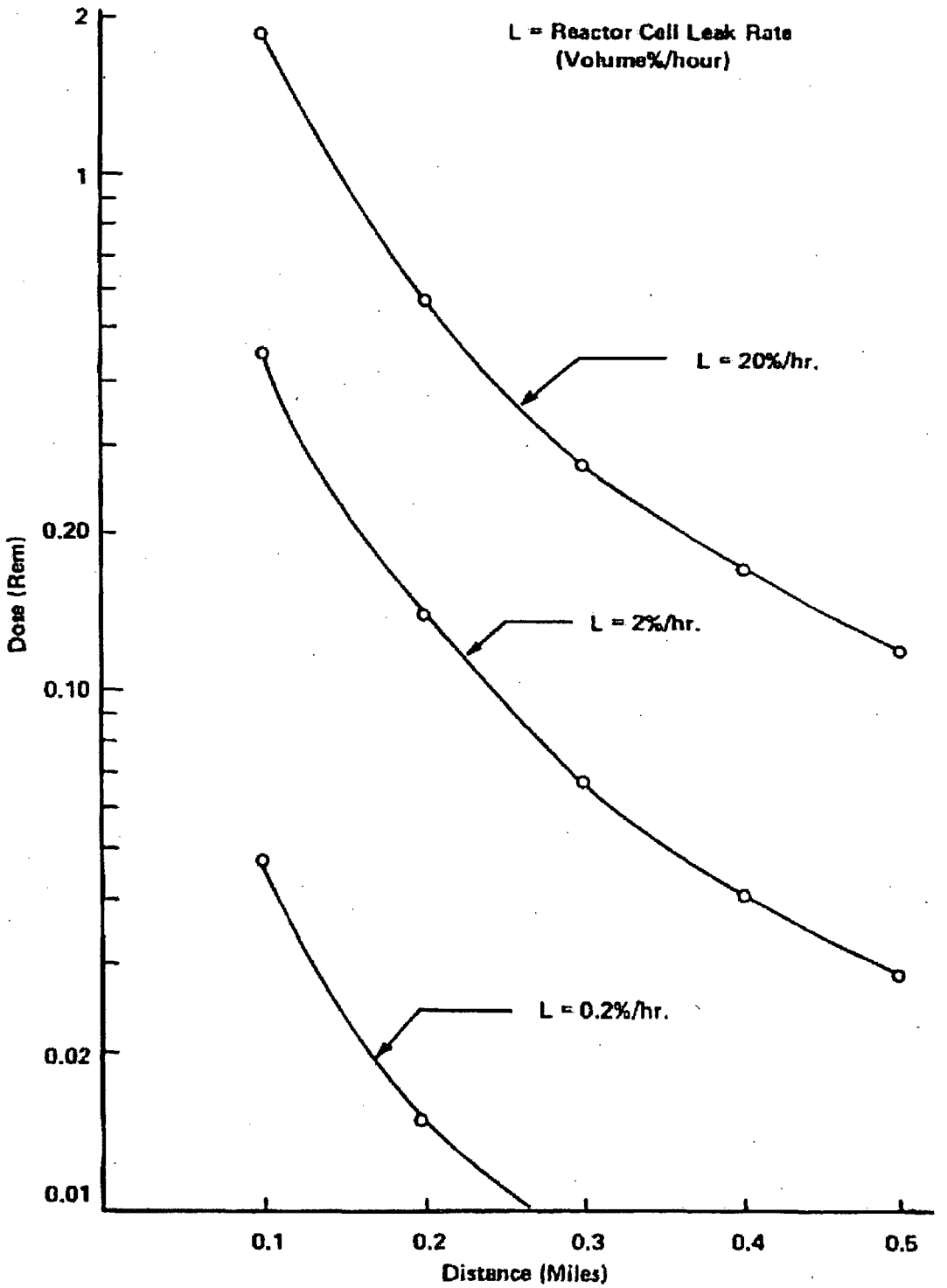

Figure 13-10 One Day Whole Body Dose for UFTR Operation at 100 kWth Using Local Meteorology. Reactor Cell Leak Rate Varying from 0.2% / h to 20% /h

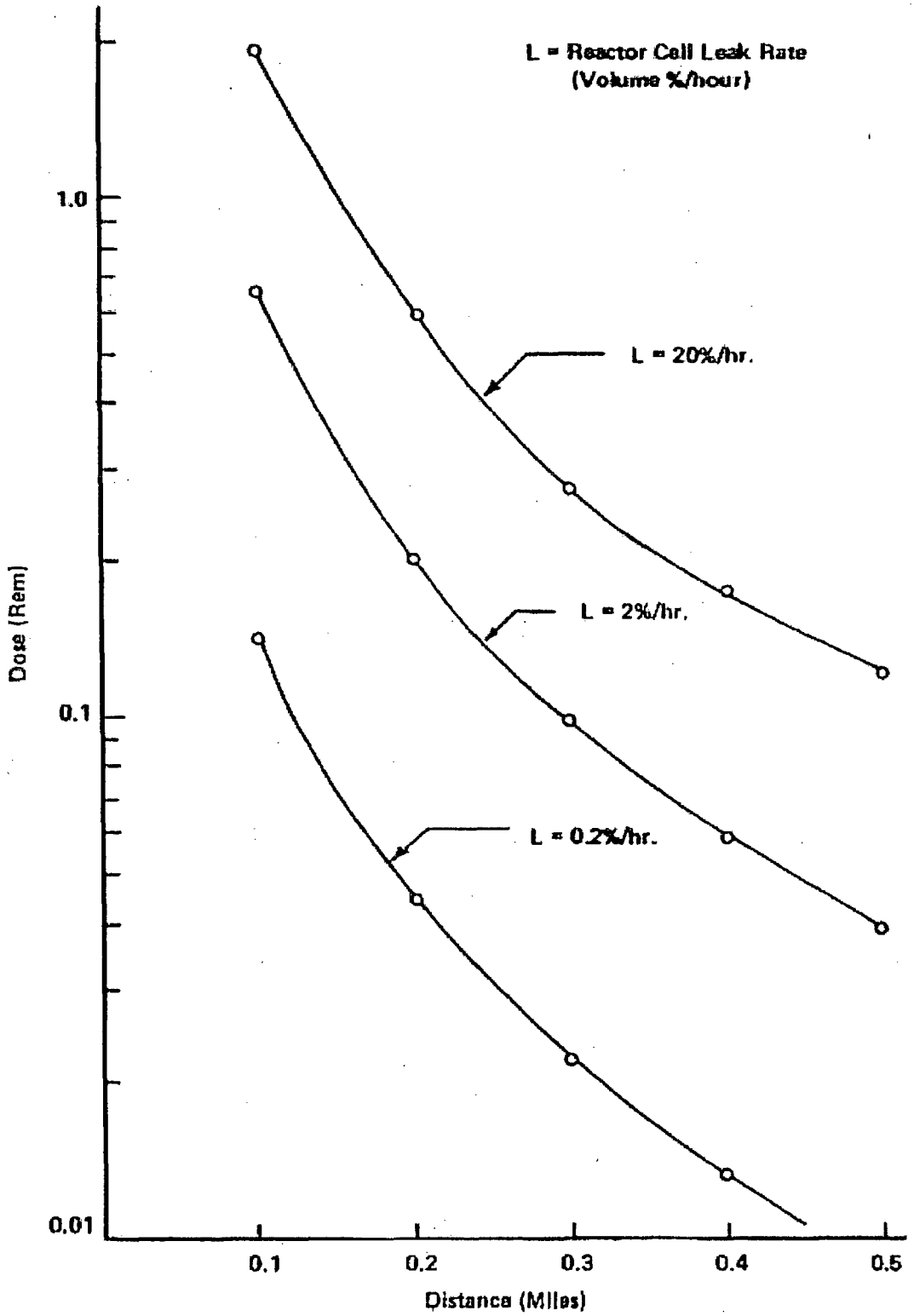

Figure 13-11 Thirty-Day Whole Body Dose for UFTR Operation at 100 kWth Using Local Meteorology. Reactor Cell Leak Rate Varying from 0.2% / h to 20% /h

REFERENCES

1. Diaz, N.J. and W.G. Vernetson, *UFTR Final Safety Analysis Report.* 1981, University of Florida, Department of Nuclear and Radiological Engineering.: Gainesville, Fl.
2. Duncan, J.M., *University of Florida Training Reactor Hazards Summary Report.* 1958, Florida Engineering and Industrial Experiment Station, Bulletin Series #99.
3. Ibanez, L.F., *Radiological Impact of the University of Florida Training Reactor*, in *Department of Nuclear and Radiological Engineering.* 1979, University of Florida: Gainesville. p. 105.
4. Listing, L., *A two dimensional neutronic calculation and a summary of modifications and technical specification changes for 500 kWth operation of the UFTR*, in *Department of Nuclear and Radiological Engineering.* 1974, University of Florida: Gainesville.
5. Hawley, S.C., R.L. Kathren, and M.A. Robkin, *Analysis of Credible Accidents for Argonaut Reactors NUREG/CR-2079 PNL-3691.* 1981, U S Nuclear Regulatory Commission.
6. Wagner, W.A., *Feasibility Study of 500 kWth Operation of the University of Florida Training Reactor*, in *Department of Nuclear and Radiological Engineering NRE.* 1973, Florida: Gainesville.
7. Institute, B.M., *Radioisotope Buildup and Decay Code and Data Library (RIBD)*: Richland, Washington.
8. J.A. Zuloaga, J., *"Operational Characteristics of the Modified UFTR"*, in *Department of Nuclear and Radiological Engineering.* 1975, University of Florida: Gainesville, Fl.
9. NRC, *U.S.NRC Regulatory Guide 1.111. " Methods for Estimating Atmospheric Transport and Dispersion of Gaseous Effluents in Routine Releases from Light-Water-Cooled Reactors."*
10. ANS-15.7, *Guide for Research Reactor Site Evaluation Draft Proposed Standard.* 1975.
11. NRC, *U.S.NRC Regulatory Guide 1.4 " Assumptions Used for Evaluating the Potential Radiological Consequences of a Loss of Coolant Accident for Pressurized Water Reactors".*
12. *Preliminary Safety Analysis Report for the Palo Verde Nuclear Generation Station - Units 1, 2, and 3.*
13. *ICRP Publication 2, Recommendations of the International Commission on Radiological Protection, Report Committee II on Permissible Dose for Internal Radiation*, Pergamon Press,Inc., New York, 1959.
14. Boynton, A.R. and T.F. Parkinson, *Operational Characteristics of the University of Florida Training Reactor*, in *Department of Nuclear Engineering.* 1965.
15. Dietrich, J.R. and D.C. Layman, *"Transient and Steady State Characteristics of a Boiling Water Reactor. The Borax Experiments, 1953" AECD-3840.* February, 1954, Argonne National Laboratory.
16. Dietrich, J.R. and D.C. Layman. *"Experimental Determinations of the Self Regulation and Safety of Operation Water-Moderated Reactors" A/Conf 8/P/481.*

in *International Conference on the Peaceful Uses of Atomic Energy*. June 30, 1955.

17. Dietrich, J.R., *Experimental Investigation of Self Limitation of Power during Reactivity Transients in a Subcooled, Water-Moderated Reactor. Borax-I Experiments, 1954" AECD -3668*. 1955, Argonne National Laboratory.
18. Shure, K. and D.J. Dudziak. *"Calculating Energy Released by Fission Products"*. in *Trans.Am.Nucl.Soc.,4,No.1, p.30*. 1961.
19. Jaeger, R.G., *Engineering Compendium on Radiation Shielding*. Vol. I. 1968, Heidelberg, Germany: Springer-Verlag New York Inc.
20. Murray, R.L., *Introduction to Nuclear Engineering, page 252*. 1961, New Jersey: Prentice-Hall, Inc., Englewood Cliffs.
21. Lamarsh, J.R., *Introduction to Nuclear Reactor Theory*. 1966, Massachusetts: Addison-Wesley Publishing Co, Inc, Reading.
22. Howard, G.E., *"Shielding and Thermal Redesign of the UCLA 100kWth Engineering Nuclear Reactor for 500 kWth Operation"*. 1968, University of California at Los Angeles: Los Angeles.
23. Nightingale, R.E., *Nuclear Graphite*. 1962, New York: Academic Press.
24. Roberts, D.K., *"Stored Energy in Reactor Graphite", Internal Report*. 1986, University of Florida: Gainesville.
25. Jr, W.A.M., *"Stored Energy in Irradiated Graphite", Internal Report Paper Compilation*. 1986, University of Missouri Research Reactor Facility.
26. Ashbaugh, C.E. and N.C. Ostrander. *"Stored Energy in the UCLA Reactor Graphite"*. in *Trans. Amer. Nucl. Soc, Vol 52, p.372*. 1986.
27. Powell, R.W., R.A. Meyer, and R.G. Bourdeau. *Control of Radiation Effects in a Graphite Reactor Structure*. in *Proceedings of the Second United Nations International Conference on the Peaceful Uses of Atomic Energy, Vol 7, p.291*. 1958.
28. Cottrell, A.H., et al. *"Theory of Annealing Kinetics Applied to the Release of Stored Energy from Irradiated Graphite in Air-Cooled Reactors". Proceedings of the Second United Nations International Conference on the Peaceful Uses of Atomic Energy, Vol 7,p.320*. 1958.
29. Peterson, S., *"Ignition and Combustion of Reactor Materials under Accident Conditions"*. Nuclear Safety, 1965-1966. **7**(No. 2): p. 169.
30. Quapp, W.J., et al. *Post Chernobyl Review of Nuclear Graphite Oxidation and Combustion*. in *Eight Annual HTGR Conference*. 1986.
31. M Robkin, D.o.N.E.L., University of Washington, *Response to Petition from the Committee to Bridge the Gap"*, l.t.N.R. Commission, Editor. 1986.
32. NRC, *"Safety Evaluation Report Related to the Renewal of the Operating License for the Research Reactor at the University of Florida Docket No. 50-83" NUREG-0913*. 1982, U S Nuclear Regulatory Commission.

Appendix 13-A Energetic Effects of A Large Reactivity Addition

13A. Energetic Effects of a Large Reactivity Addition [2]

In Appendix 13B of the UFTR Hazards Summary Report[1], a comparison between the Borax I and Borax II reactors and the UFTR with respect to the effects of a rapid reactivity insertion is studied. The characteristics of the UFTR which determine its behavior during power transients resulting from large reactivity additions are similar to, but not identical with, those of the Borax I reactor.

In the Borax I experiment, it was found that a 41 MW-sec power excursion due to a rapid reactivity insertion was required to raise the temperature of the fuel plates to the melting point of aluminum, 1220°F. The characteristics of the reactor, which determine the maximum tolerable reactivity insertion rate before fuel melting occurs is shown to be:

1. The coolant channel thickness.
2. The void coefficient of reactivity.

A comparison between coolant channel thickness and void coefficients for the UFTR and the Borax I reactor is made, resulting in a conservative estimate of the limiting non-melting power excursion rate of 35 MW-sec for the UFTR. This would be an accurate estimate of the maximum excursion rate for the UFTR if the fuel plate thickness for both reactors were the same. The fuel plates in the UFTR are thicker which allows for more energy storage during a transient, however. The increased ability to absorb energy depends on the following ratio:

$$\frac{\left(\dfrac{Heat\ Flux}{\Delta T_{c-s}}\right)_{UFTR}}{\left(\dfrac{Heat\ Flux}{\Delta T_{c-s}}\right)_{Borax}} = 0.82 \qquad \text{Equation 13A-1}$$

where ΔT_{c-s} is the temperature difference between the center and surface of the fuel plate. The ratio of peak to average flux for the two reactors, Equation 13A-2, is also taken into consideration when calculating the permissible excursion rate for the UFTR as 35 MW-sec x 0.82 x 1.12 = 32 MW-sec.

$$\frac{\left(\dfrac{Peak}{Avg}\right)_{Borax}}{\left(\dfrac{Max}{Avg}\right)_{UFTR}} = \frac{1.82}{1.63} = 1.12 \qquad \text{Equation 13A-2}$$

The corresponding exponential period for a 32 MW-sec excursion is 8.3 milliseconds. It is therefore concluded that the UFTR will tolerate a power excursion of a period at least as short as 8.3 milliseconds, without the melting of any part of any fuel plate. The excess

reactivity corresponding to this period is 2.4% $\Delta k/k$. However, the UFTR has a total excess reactivity of only 2.3% $\Delta k/k$ available in any case.

More recent analysis of credible accidents for Argonaut reactors performed by Hawley and others [5] demonstrated that a nuclear excursion resulting from the rapid insertion of a reactivity excess of 2.6%$\Delta k/k$ would produce a maximum calculated energy release of 12 MWs. According to that analysis if all energy released in the excursion is assumed to heat the fuel plates, the temperature of the fuel would be of 500°C or less, which is well below the melting temperature of the fuel or the cladding. Based on the estimated peak temperature produced in the SPERT I destructive test, the fuel hot spot would be approximately 590°C, which is still below the melting point of the fuel and cladding. The analysis concludes that any credible accident would produce a maximum fuel temperature no greater, an in all likelihood much lower, than the maximum of 590°C. Therefore, there is no safety hazard from rapid insertion of an excess reactivity of 2.6%, and core disruption, if any, would be minimal. Melting of fuel or cladding would not result from this accident [5].

Appendix 13-B Estimation of Effects of Assumed Large Reactivity Additions

13B. Estimation of Effects of Assumed Large Reactivity Additions [2]

13B.1 Introduction

It has been demonstrated repeatedly in the Borax and SPERT reactors that water-cooled, water-moderated reactors of suitable design may have a very substantial self-protection against the effects of reactivity accidents, even in the absence of corrective action by the reactor control system. This self-protection is provided by the negative steam-void coefficient of reactivity and the corresponding negative reductions in reactivity as the reactor power rises. The UFTR has been designed with a high degree of self-protection of this negative reactivity feedback type. In this appendix estimates are presented of the behavior of the UFTR under various hypothetical conditions of excess reactivity addition with no corrective action by the control system.

The characteristics of the UFTR which determine its behavior during power transients resulting from large reactivity additions are quite similar to, but not identical with, those of the Borax I reactor. UFTR behavior is predicted most reliably by utilizing the Borax I data with simple correction factors to convert them to the UFTR conditions.

The significant quantitative characteristics of the UFTR and the Borax I reactor are compared in Table 13B-1.

The U-238 in the 93 percent enriched fuel of the UFTR introduces a small negative Doppler coefficient of reactivity estimated to be of the order of 4×10^{-7} $\Delta k/k$, equivalent to 0.004 percent reduction in k per 100°C rise in fuel temperature. Although the Doppler coefficient acts nearly instantaneously to assure shutdown of the reactor in case of a reactivity accident, its shutdown effect is not expected to be important because expulsion of the water moderator terminates an excursion before the fuel temperature has risen appreciably. Mostly, the water will be ejected through the rupture disk in the primary coolant dump line.

In addition, to the quantitative differences, the UFTR differs from Borax I in that the maximum coolant water level is only a few inches above the upper ends of the fuel plates (instead of about 4 ft.) and the coolant water, once it has been ejected forcibly from the core by power excursion, cannot fall or flow back into the core.

13B.2 Effect of 0.6 Percent Excess Reactivity

An excess reactivity of 0.6% $\Delta k/k$ may possibly be inserted in the UFTR through removal of a non-secured or movable experiment. The addition of this reactivity would cause the reactor to operate at a power such that the reactivity losses associated with the temperature increase and the voids formed will equal the excess reactivity. If the reactivity is added slowly, after the reactor is critical, the power approaches such an

equilibrium level slowly as the reactivity is added. If the reactivity is added suddenly when the reactor is initially sub-critical or at very low power, the power will at first rise exponentially with a period not shorter than 0.8 seconds which is the asymptotic period corresponding to the full excess reactivity of 0.6% Δk/k. Many experiments with the Borax reactors have demonstrated that for periods of this order of magnitude, the transition from the exponential power rise to the equilibrium power level (in which excess reactivity is balanced by temperature and steam void coefficients) is a smooth one involving little or no power overshoot. On the basis of this experience, it is concluded that the magnitude of the power excursion which would result from the 0.6 percent reactivity addition, as related to experiments, does not depend greatly on whether the reactivity is added suddenly or relatively slowly in neither case will it approach a level which can cause a fuel plate to burn out or melt.

In order to compute the power level at which the reactor will operate after the addition of the 0.6 percent excess reactivity discussed in the foregoing, it is necessary to know the water temperature coefficient of reactivity. The relative importance of the two moderators, graphite and water, in determining the effective neutron temperature introduces uncertainties in the theoretical computation of this coefficient. The coefficient cannot, however, have an absolute magnitude less than that of the water density coefficient of reactivity referred to a temperature scale, i.e., the coefficient computed on the assumption presented in Equation 13B-1 as follows

$$\frac{dk_{eff}}{dT} = \frac{\delta k_{eff}}{\delta \rho} \cdot \frac{\delta \rho}{\delta T} \qquad \text{Equation 13B-1}$$

where ρ is the water density
T is the temperature and
$\delta\rho/\delta T$ is the negative of the void coefficient of reactivity

On the assumption that this minimum value is correct, a rise of water temperature from near 0°C to 80°C would reduce reactivity by 0.6% Δk/k.

The capacity of the reactor coolant system is such that if the outside air temperature were 0°C and the average water temperature in the reactor were 80°C, energy would be removed at the rate of 365,000 BTU/hr or 107 kWth. Under these conditions the reactor water inlet temperature would be 60°C and the exit temperature coincidentally would be 100°C. It is, therefore, concluded that if the full available excess reactivity of 0.6% Δk/k were added to the reactor on a cold day with the coolant system operating, the reactor could operate in the absence of protective actions at an equilibrium power level about 10 times higher than its normal maximum with little or no net steam production. Before reaching the equilibrium power, when the water in the coolant system would be heated to the equilibrium value, the reactor would operate at a somewhat higher power level and some net steam production might occur. If the coolant were not flowing during the time of excess reactivity addition, the equilibrium power level would be quite low and equal to the heat losses. In no case would the power level approach a value high enough to justify any fear of fuel-plate burnout.

13B.3 Maximum Tolerable Sudden Reactivity Addition

In order to assess the safety factor which exists between the normal excess reactivity available in the reactor and the excess reactivity necessary for a serious power excursion, it is useful to estimate the value of excess reactivity which, if suddenly inserted and not removed by the control system, would raise the maximum temperature in the hottest fuel plate to the melting point. Such an excursion would damage the reactor core but would not result in any substantial release of fission products.

The first step in the procedure is the estimation of the exponential period corresponding to the excess reactivity, which would have characterized a power excursion of similar effect in Borax I. The estimate requires that (1) a relationship be established between the maximum temperature of the fuel plate and the energy release of the excursion and (2) the energy release be related to the period of the excursion.

For the case of power excursions of short period, with reactor water at saturation temperature, it is shown in the original Hazards Summary that the maximum fuel-plate temperature rise is, within experimental error, proportional was determined to be constant 24.4°F per MW-sec. Listing's measurements of the same type with cold reactor water (the case directly applicable to the UFTR) showed a similar relationship but with a proportionally constant of only about 10°F per MW-sec [4].

The difference is not an unreasonable one since the sub-cooled water represents a more effective heat sink than the saturated water. However, the experiments with the saturated water were carried to short periods in the range of interest whereas the sub-cooled experiments were limited to longer periods. Therefore, more conservative saturated water data will be used. To raise the maximum temperature of the fuel plate from the temperature of boiling water to the melting point of aluminum, a temperature change of approximately 1000°F, would require a power excursion with a total energy release of 10,000°F/24.4°F/MW-sec or 41 MW-sec.

According to Listing's data, a sub-cooled power excursion of reciprocal period 150 sec^{-1} would give an energy release of 41 MW-sec in addition to the energy necessary to raise the fuel plate temperature to the saturation temperature of water. [4] It is therefore concluded that a power excursion of period at least as short as 1/150 sec (6.7 milliseconds) could have been tolerated by Borax I with sub-cooled water without melting at the hottest points in the fuel plates. Actually, the energy data of the original Hazards Summary Report were revised in Reference [14] because of later and better calibrations of the instrumentation. The numbers above are taken from the later (and more conservative) data.

Experiments of the Borax and SPERT types have not been made with reactors having widely different neutron lifetimes. The general evidence of the experiments however supports the supposition that of the three related variables—neutron lifetime,

excess reactivity, and exponential period—which characterize the neutron physics of a power excursion, it is the exponential period that determines the total energy release and the temperatures attained. The excess reactivity and neutron lifetime have large effects only as **they** jointly determine the period. This supposition is consistent, for example, with the observations that the total energy transferred to the coolant water during a power excursion is many times the amount which would vaporize enough water to compensate for the excess reactivity, and that the actual reactivity reduction which occurs during the excursion is much larger than the initial excess reactivity. The extension of the Borax results to the UFTR is made on the basis of this evidence.

It is convenient, first, to treat only the effects of the slightly greater fuel-plate spacing and the slightly lower void coefficient of reactivity of the UFTR relative to the Borax I. Information will also be drawn from the Borax II experiments. The Borax II reactor differed from Borax I in that the coolant channel thickness was greater in the ratio $\frac{0.264in.}{0.117in.} = 2.26$ and that the calculated void coefficient of reactivity was lower by the following ratio:

$$\frac{0.10\%k_{eff}/\%void}{0.24\%k_{eff}/\%void} = \frac{1}{2.4} = 0.416 \qquad \text{Equation 13B-2}$$

Both of these differences would be expected to cause a higher energy release per fuel plate in Borax II than in Borax I for a power excursion of given period. The measurements made with sub-cooled water at periods down to 23 milliseconds showed that the energy release per fuel plate in Borax II was between 1.7 and 2.0 times that of Borax I, with the smaller ratio applying to the shorter periods. [14] Therefore, it seems quite conservative to assume, in the case of any two reactors, (1) and (2), of the Borax type having a ratio of fuel plate spacing, S_1/S_2, and a ratio of void coefficients of reactivity, C_1/C_2, that the ratio of energy release per fuel plate for a sub-cooled power excursion of given period will be no greater than $E_2/E_1=S_2/S_1$ or $E_2/E_1=C_1/C_2$ whichever is larger. For the UFTR and Borax I the ratios are given as follows:

$$\frac{S_{UF}}{S_{Bo}} = \frac{0.137}{0.117} = 1.17 \; and \; \frac{C_{Bo}}{C_{UF}} = \frac{0.24}{0.21} = 1.14 \qquad \text{Equation 13B-3}$$

It is concluded, therefore, that a Borax reactor having a coolant channel thickness and a void coefficient of reactivity equal to those of the UFTR would release not more than 1.17 times as much energy per fuel plate as Borax I. The limiting non-melting period for such a reactor would be that which in Borax I gave an energy release of 41/1.17 = 35 MW-sec. The period obtained from Figure 13B-1, corresponding to a total energy release of 35 MW-sec, is 7.7 milliseconds.

The remaining difference between the Borax I and the UFTR is in the composition of the fuel plates. The UFTR plates are thicker; their uranium-aluminum

alloy has somewhat lower conductivity because of their higher uranium concentration, and their aluminum cladding is thinner.

In comparing the behavior of different fuel plates, it must be recognized that the total energy release of the power excursion can no longer be considered as a definitive variable because a large fraction of the total energy released is stored in the fuel plate during the important stage of the reactor shutdown. For example, a reactor composed of fuel plates of high heat capacity undoubtedly will experience a larger total energy release, but not necessarily a higher maximum temperature, during a power excursion of given period, than a reactor having plates of low heat capacity.

From examination of the Borax results, it seems clear that two distinct phases of the reactor shutdown process occur consecutively and that both may be important in determining the maximum center temperature of a fuel plate. The first phase covers the interval before an important amount of boiling occurs at the fuel plate surface. During this interval, the heat loss to the water is small and the important consideration is evidently the ratio of fuel plate surface temperature (which determines the start of boiling) to center temperature. For periods in the range under consideration, this temperature ratio is theoretically not far from unity (0.76 minimum for a 10-millisecond period in Borax I). Experimentally, the temperature ratio was unity for periods down to 5 milliseconds in the Borax I measurements. Since the total effect is small and the temperature ratio for Borax and UFTR fuel plates should not be much different, the thinner cladding will tend to balance the effect of the poorer "meat" conductivity. It is concluded, therefore, that there will be no important difference in fuel plate performance during this initial phase of excursion.

The second phase of the power excursion begins when a significant rate of boiling is established at the plate surface. Reactivity and consequently generation are reduced at a rate that must be a function of the rate at which heat can be transferred into the boiling water. At the same time the transfer of heat into the water removes heat from the fuel plate and limits its temperature rise. The important characteristic of the plate during this phase of the excursion is the heat flux which it can supply to the water for a given temperature difference between the plate center and surface. A figure assumed to be roughly indicative of the relative performance or merit of fuel plates during this phase is the ratio of heat flux to temperature difference under steady-state conditions. This ratio (figure of merit) will overemphasize the difference between fuel plates since the temperature distribution in the plate will be more peaked during a steady-state conduction than during conduction when the general temperature level is rising. The ratio of these figures of merit for Borax I and the UFTR is as follows:

$$\frac{\left(\dfrac{Heat\ Flux}{\Delta T_{c-s}}\right)_{UFTR}}{\left(\dfrac{Heat\ Flux}{\Delta T_{c-s}}\right)_{Borax}} = 0.82 \qquad \text{Equation 13B-4}$$

A conservative procedure would be to apply the above factor to the permissible total energy of excursion on the Borax I curve. At the same time, however, the difference in gross maximum to average power ratio for the two reactors should be taken into account since it is the temperature of the hottest point in the hottest fuel plate that is being considered. The power ratio for the two reactors is:

$$\frac{\left(\frac{Max}{Avg}\right)_{Borax}}{\left(\frac{Max}{Avg}\right)_{UFTR}} = \frac{1.82}{1.63} = 1.12 \qquad \text{Equation 13B-5}$$

The combination of these two factors reduces the permissible equivalent energy of the Borax-type excursion to 32 MW-sec based upon multiplicative combination of these factors: 35 x 0.82 x 1.12 = 32 MW-sec. The corresponding exponential period from Figure 13B-1 is 8.3 milliseconds. It is, therefore, concluded that the UFTR will tolerate a power excursion of period at least as short as 8.3 milliseconds without the melting of any part of any fuel plate. The excess reactivity corresponding to this period is 2.4% Δk/k.

13B.4 Successive Power Excursion

It is typical of the Borax and SPERT reactors that, unless the excess reactivity is removed by external means, an initial power excursion which terminates itself by expelling water from the reactor core will be followed by subsequent excursions as the water falls and flows back into the core. An exception to this behavior occurs when the initial excursion is violent enough to cause a permanent loss of reactivity by throwing a large amount of water completely out of the reactor tank. In the UFTR the total quantity of water in the core is small, the submergence of the core is small, and the water will be forcefully expelled from the core through a rupture disk in the dump line. Consequently, even a relatively mild power excursion (e.g., one having an exponential period of from 20 to 30 milliseconds) in the UFTR will result in permanent self-induced shutdown of the reactor. By this same design feature, the possibility of large successive power excursions, such as those studied in the SPERT project, resulting from the ramp addition of excess reactivity, is eliminated. It can be anticipated that the UFTR is safe against quite large ramp additions (larger than 2.4% Δk/k) provided only that the ramp rate is not so rapid as to add an excess reactivity of more than 2.4% Δk/k before the reactor power reaches a high level. To exceed this limit the ramp rate would need to be of the order of 1.0% Δk/k per second or larger. Applicable references from the original Hazards Summary are [15], [16] and [17].

Table 13B-1 Comparison of UFTR and Borax I Characteristics

Characteristics	UFTR	Borax I
Fuel plate "meat"	46 w/o U-Al alloy (93 percent enriched)	18 w/o U-Al alloy (fully-enriched)
Fuel plate cladding	1100 aluminum	1100 aluminum
"Meat" thickness	0.040 in.	0.020 in.
Cladding thickness	0.015 in.	0.020 in.
Coolant-channel thickness	0.137 in.	0.117 in.
Core volume (approx.)	71 liters	106 liters
Void coefficient of reactivity (calculated)	-0.21% $\Delta k/k/\%$ coolant void	-0.24% $\Delta k/k/\%$ coolant void
Temperature coefficient of reactivity (room temperature)	-0.01% $\Delta k/k/°C$ (estimated)	-0.01% $\Delta k/k/°C$
Effective prompt-neutron lifetime	1.4×10^{-4} sec (calculated)	0.65×10^{-4} sec
Power Peaking Factor in core (maximum/average)	1.63	1.82

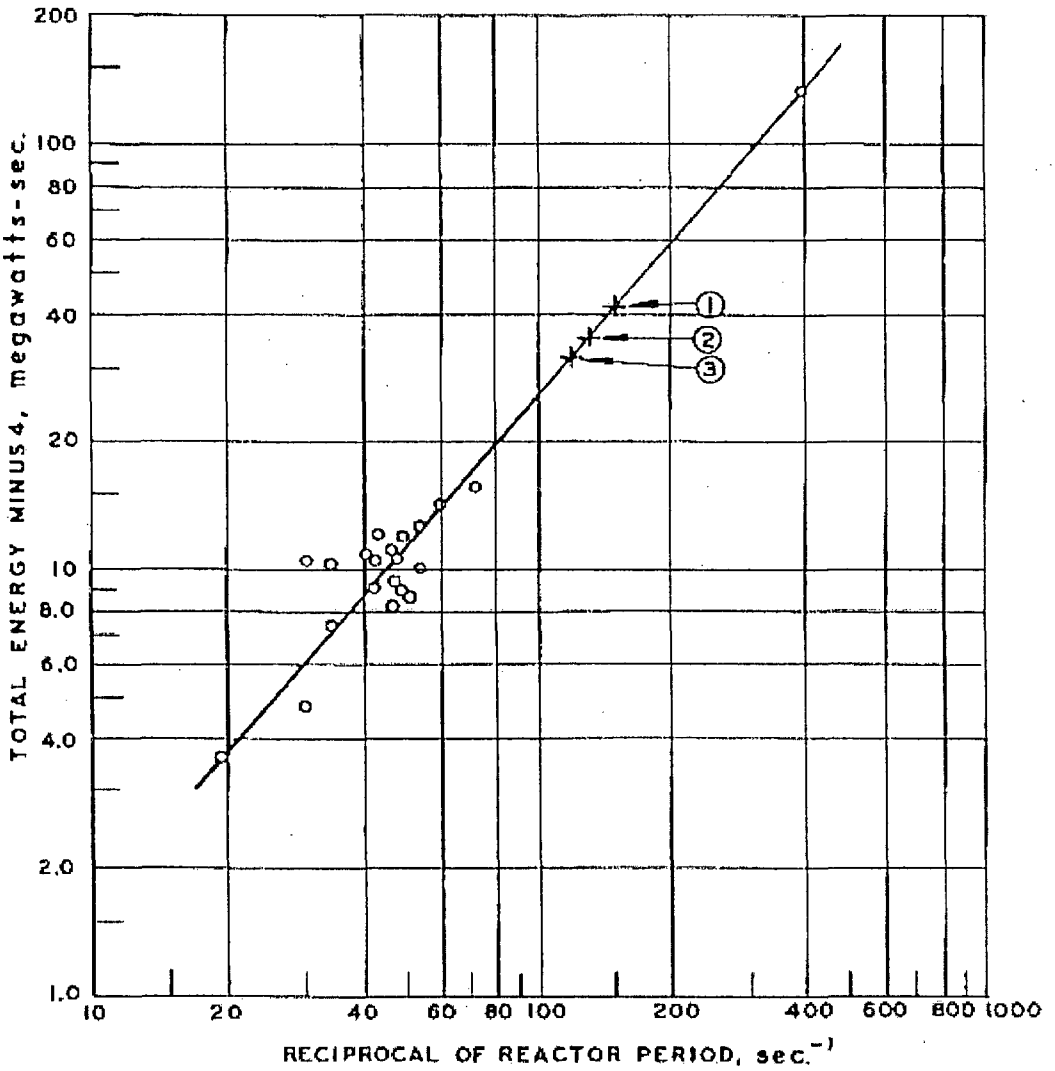

Initial Water Temperature 66°F to 82°F

1. Estimated safe limit for Borax I;
2. Estimated safe limit for Borax I with University of Florida Training Reactor plate spacing;
3. Estimated safe limit for University of Florida Training Reactor.

Figure 13B-1 Excursion Energy for Reactor Transients

Appendix 13-C Loss of Coolant Accident [6]

13C. Loss of Coolant Accident [6]

An increase in the UFTR operating power necessitates an investigation of fuel temperatures following a loss of coolant and shutdown of the reactor either by the negative void coefficient of reactivity or by mechanical insertion of the control blades. It should be emphasized here that insertion of the control blades is not necessary, and the reactor will shut itself down simply due to the moderator void effect.

Wagner (Appendix 13D) has investigated the problem described above using a rather pessimistic heat transfer model and has concluded that fuel plate temperatures will increase only by about 30°F following a dump scram event. [6]

To represent the decay heat generation following a reactor shutdown, the empirical equation (13C-1) of Shure and Dudziak is used as follows: [18]

$$\frac{P}{P_{irr.}} = 0.005\,[a_1\tau_c^{-a_2} - a_1(\tau+\tau_c)^{-a_2}] \qquad \text{Equation 13C-1}$$

where

τ	= irradiation time,
τ_c	= decay time following shutdown,
P	= power after decay time, τ_c,
$P_{irr.}$	= reactor operating power after irradiation and
a_1, a_2	= constants which are given in the original UFTR Hazards Summary.

Wagner [6] further assumed a heat transfer model which ignored radiative and convective heat transfer mechanisms, the only heat loss mechanism being conduction by partial contact of the fuel plates with the fuel box wall. Figure 13-1 shows the fuel plate temperature as a function of time after reactor shut down due to decay heating effects. Even if the calculation described here is in error by 100 or 200%, which is unlikely considering the conservative approach, the fuel plate temperature rise will not approach temperatures of even half the melting point of aluminum. It must be concluded then, that a loss of cooling flow accident in no way represents a hazard to core structural integrity of the UFTR.

Appendix 13-D Decay Heat Effects [6]

13D. Decay Heat Effects [6]

13D.1 Experimental Verification of the Decay Heat Equation

To represent the decay heat level, P, following a reactor shut down, the empirical equation of Shure and Dudziak [18] is used, and is given by Equation 13D-1:

$$\frac{P}{P_{irr.}} = 0.005\,[a_1\tau_c^{-a_2} - a_1(\tau+\tau_c)^{-a_2}] \qquad \text{Equation 13D-1}$$

where

τ = irradiation time,
τ_c = decay time following shutdown,
P = power after decay time, τ_c,
$P_{irr.}$ = reactor operating power during irradiation,
a_1, a_2 = experimentally determined empirical constants.

The applicability of Equation 13D-1 to the UFTR problem was checked by the following experimental procedure. The reactor was operated at 100kWth for 13 hours and then shutdown, with the secondary coolant water shut off. The primary coolant ΔT_c across the core was then observed and compared to the ΔT_c calculated from a primary coolant heat balance, using the decay heat source given in Equation 13D-1 and also including the heat added by primary coolant pumps. Results indicate that, at approximately 600 seconds after shutdown, the primary coolant inlet and outlet temperatures are stabilized at 130.1°F and 130.5°F, respectively, corresponding to ΔT_c=0.4°F. Assuming 90 percent of the 0.72 kW electrical power applied to the primary pump is dissipated as heat to the primary coolant, and considering the decay heat as given by Equation 13D-1 with τ = 43,800 seconds and τ_c = 600 seconds, the primary coolant ΔT_c is computed to be ΔT_c = 0.48°F. This result for the temperature rise across the core agrees relatively well with the experimentally measured values of ΔT_c despite possible recording errors in the coolant temperature readings, and provides some degree of verification for the applicability of Equation 13D-1 to this situation [6].

13D.2 Simulation of Heat Flow Followed a Dump Trip [6]

An increase in the UFTR operating power necessities an investigation of decay heating of the fuel following a loss of coolant, that is, a dump-scram situation. The magnitude of such an effect is estimated by using a conservative model which assumes that the UFTR has been operated to equilibrium at 625 kWth (over 6 times rated power) and then an instantaneous dump-trip occurs. The fuel plate temperatures as a function of

time after the dump-scram are then calculated by simulating the heat flow in the core region.

Equation 13D-1 gives the rate of emission of beta and gamma energy; however, not all gamma rays are absorbed in the fuel boxes. The fraction of gamma rays absorbed in a fuel box (a center fuel box of dimensions: 5 ¼" x 6 ¼" x 48", and weighing 13.9 lbs., is considered for all calculations) is determined by treating the box as a homogenized cylinder, allowing volume weighted mass absorption coefficients for seven gamma energy groups to be determined. Using equations 6.4-32 and 6.4-30 of Reference [19] (p. 382), the gamma fluxes are respectively calculated at the center of the *cylindrical* fuel box and at the exterior midplane point on the side of the box. With these values and the equilibrium fission product decay gamma spectrum as given by Reference [20], 63.6% of the gamma energy is found to be absorbed in the center fuel box. Since about 53 percent of the total decay energy is in the form of gamma rays [21] and estimating the radiation from the adjacent two fuel boxes, 88.1% of the total fission product decay energy is computed to be absorbed in the center fuel box.

Within each fuel box the fuel plates are aligned along the east-west direction. A center pin is forced in the center of the four fuel bundles which pushes the fuel plates in contact with the east and west side of the fuel box. The center fuel box itself touches graphite which lies on the north and south sides. Thus, the heat produced within a fuel plate flows through its edges (25.625" x 0.07" side) to the fuel box (QPLAT) and from the box to graphite (QBOX), which is assumed at a constant temperature. Convective and radiative heat losses are negligible. The center pin which forces the fuel plates to the sides of the fuel box is applied only at the top of the bundles; therefore, contact at points towards the bottom of the fuel box may be small and possibly nonexistent. The thermal resistance for QPLAT is thus determined by assuming 50% Al-Al contact and 50% separation by a 1/32" thick air wall. The average unit thermal conductance for an Al-Al contact at a contact pressure of 14.223 psi is 634.25 BTU/hr-°F (56) which gives,

$$QPLAT = 1.109 \times 10^{-3} (TPLAT - TBOX) \text{ BTU/sec-°F} \qquad \text{Equation 13D-2}$$

where

TPLAT = temperature of the fuel plate (°F), and
TBOX = temperature of the fuel box (°F).

The thermal resistance for QBOX is determined by also considering a 1/32" thick wall separating the fuel box and the graphite, with 50% of the area comprised of air and 50% of graphite. This gives,

$$QBOX = 1.799 \times 10^{1} (TBOX - TGRAP) \text{ BTU/sec-°F} \qquad \text{Equation 13D-3}$$

where TGRAP = temperature of the graphite (°F)

This simulation conservatively assumes that there are a total of 230 fuel plates in the UFTR, each "ideally" weighing 0.52771 lbs. This simulation also conservatively assumes that each of the 44 fuel plates in the center fuel box was operating at a hot channel factor of 1.5, which gives a power output of 3.864 BTU/sec/plate for a 625 kWth power level. Using equations 13D-1 and 13D-2, the heat production rate within a plate and the heat flow rates in the core can be found, allowing the determination of the fuel plate and fuel box temperatures.

The fuel plate temperature versus time after dump-trip, following infinite reactor operation at 625 kWth is shown in Figure 13-1. The fuel plate temperature rise is 26°F and occurs 2800 seconds after the dump-trip initiation. It can be seen that decay heating of the fuel is minimal. The 26 °F temperature rise represents an upper bound for the decay heat effects due to the conservatism of the model.

The actual extent of this conservatism is difficult to establish since experimental support cannot be obtained from the UFTR due to a lack of temperature detection devices on the fuel plates. Thermocouples do exist; however, they are in the coolant outlet pipes of each fuel box, rather than on the fuel plates, and would be quite low because of heat conduction losses of the box to the graphite. This problem did not exist for the UCLA Argonaut reactor. A short duration, high power dump-trip experiment was investigated for this reactor [22]. It was found that the surface temperature rise of the midpoint of the hottest fuel plate following a dump-trip at 500 kWth was only 14°F. Since the maximum temperature was achieved within one minute after the dump-scram and since prior steady reactor operation at this power level occurred for only 8 minutes, it is assumed that decay heating for this case is negligible. The temperature rise is mainly due to the thermocouple on the surface of the fuel plate climbing to the actual fuel temperature rise of about 0.04°F, due to decay heating, would result for the UCLA experiment where it is assumed that TPLAT = 197°F, TGRAP = TBOX = 190°F, and $\tau = 600$ seconds.

Table 13D-1 Constants for Total Fission Product Energy Release [18]

Applicable Time Interval (sec)	a_1	a_2	Maximum Positive Deviation (%)	Maximum Negative Deviation (%)
0.0 to 10	12.05	0.0639	4	3
10.0 to 150	15.31	0.1807	3	1
150.0 to 8×10^8	27.43	0.2962	5	6

Appendix 13-E Radiation Releases Resulting from Release of Fission Products into the Atmosphere [2]

13E. Radiation Releases Resulting From Release of Fission Products Into The Atmosphere [2]

Although a significant fission product release is not considered plausible because of the inherent self-limiting characteristics of the UFTR, it is informative to calculate exposure rates due to the release of fission products following a fuel meltdown. Calculations in the original UFTR Hazards Report (See Appendix 13F) are based on reactor operation at 10 kWth long enough to have attained equilibrium concentrations of the relatively short-lived fission products, i.e., the iodine, bromine, and krypton isotopes. The incident is assumed to result in the transfer of 10% of the volatile fission products from the reactor fuel plates to the building air. It is assumed further that none of the non-volatile fission products are transferred to the building air although they may be released to the reactor coolant water and retained within the reactor building. The major avenues of leakage of fission products from the reactor room are through the doors.

Three arbitrary exposures were calculated and presented in the original Hazards Report as follows:

1) The I-131 dose to the thyroid of a person standing at a distance of 61 meters downwind of the leak for 8 hours resulting in a total integrated dose of 155 rem.

2) The external Beta-dose from the I-131 isotope for a person standing at a distance of 61 meters downwind of the leak for 8 hours resulting in a total integrated dose of 19 mrem.

3) The total gamma dose to a person standing 61 meters downwind of the leak for 8 hours resulting in a total integrated dose of 19.2 mrem.

Since the exposures calculated are proportional to activity of the fission products, and the concentration of fission products is proportional to the reactor flux, the total integrated dose in each case for 100 kWth operation would simply be 10 times the dose at 10 kWth.

Appendix 13-F Radiation Doses Resulting From Release of Fission Products into the Atmosphere

13F. Radiation Doses Resulting From Release of Fission Products Into the Atmosphere [2]

Estimates have been made of the radiation doses which would be received by persons outside the reactor building should there be a release of reactor fission products into the reactor building and leakage of the building air to the outside. The radiation exposures considered here are those that would result from the passage of the airborne cloud of radioactive contaminants over the ground. These include the external beta and gamma radiation exposures and the internal exposure of critical body organs resulting from the inhalation of the airborne contaminants. The most important of the internal exposures are the iodine dose to the thyroid and the strontium dose to the bones.

The radiation exposure received by a person standing a given distance from the reactor building obviously depends on such factors as a) curies from fission products stored within the core at the time of release, b) fraction of the core fission products escaping into the building air, c) building out-leakage rate, and d) atmospheric dispersive properties. Hence, in the analysis, certain basic assumptions are required as to the circumstances surrounding the release of the fission products, as to atmospheric conditions, and as to the tightness of the building at the time of the release. The results obtained here are based on assumptions, which, except for the arbitrary one that a release has occurred, are considered reasonable for the reactor and building design. The calculation method is described and illustrated in sufficient detail that additional calculations based on other assumptions can be made if desired as shown in the original UFTR Hazards Summary [2].

The material presented in the Hazards Summary is divided into three sections. The first section describes the model assumed for the release and spread of radioactivity and gives the necessary references and formulae used in calculating the radiation doses. The second section illustrates the calculational procedure. The third section presents the results obtained for the radiation exposure hazards with the assumed model. The details on the original dose calculations can be found on pages 114-119 of the original Hazards Summary while the results of the radiation exposure calculations are summarized in Table 13F-1.

Table 13F-1 Total Integrated Dose (rem) from an 8-Hr Exposure at Various Distances Downwind from Reactor Building Leak [2]

x, meters	External Beta Dose	Gamma Dose	Thyroid Dose	Bone Dose
		Severe Inversion		
15	14	0.080	1800	0.006
61	1.6	0.019	220	0.0007
152	.4	0.010	59	0.002
305	.15	0.005	20	----
		Mild Lapse		
15	2.2	0.040	290	0.001
61	.19	0.007	26	0.0001
152	.04	0.004	6	----
305	.012	0.002	2	----

Appendix 13-G Wigner Energy Considerations for UFTR Graphite Fires

13G Effects of Wigner Energy on Probabilities of Graphite Fires at the UFTR

13G.1 Introduction

Three specific aspects of stored energy in UFTR graphite are considered for potential impact on the UFTR safety analysis:

1) maximum stored energy at the UFTR as a function of graphite exposure to fast neutrons[23];
2) conditions required to initiate a graphite fire with respect to contributions to temperature from stored Wigner energy[5]; and
3) specific conditions at the UFTR that will not support graphite combustion.[1]

13G.2 Calculation of Stored Energy

Historically, Wigner energy storage has been determined as a function of reactor energy generation, change in graphite physical characteristics and thermal neutron fluency. However, the actual mechanism for Wigner energy storage is based on exposure to fast neutrons – not the previously mentioned parameters.[23]

Accepted methodology in determining total Wigner energy storage has been to find a reactor similar to the reactor under construction and to apply the previously determined parameters to the reactor under construction. Specifically, the British Experimental Pile Oscillator (BEPO) correction factor relates thermal neutron fluency to Megawatt Days of exposure to adjacent ton of Uranium (MWD/At)[23]. The BEPO conversion factor has been applied to Argonaut-type reactors for generic hazards analyses[5]. Note, however, that the BEPO thermal neutron flux to fast neutron flux ratio is different from the UFTR ratio of nominal thermal neutron flux to fast neutron flux[1, 23]. The nominal maximum value of 5 cal/g for center island graphite in the generic hazard analyses does not include a correction for the differences in neutron energy spectrum between the BEPO and the UFTR.

Each reactor has a unique neutron energy spectrum; when comparing storage energy values, each requires a correction factor to account for the variance in the relationship between the neutron spectrum (i.e., the fast neutron flux) and the reference parameter (BEPO equivalent thermal neutron flux is the parameter of interest at the UFTR) used to define the energy storage function. A BEPO equivalent thermal neutron flux of 1.8×10^{12} n/cm^2-s represents a fast neutron flux (>1 MeV) of 6.2×10^{10} n/cm^2-s because the thermal to fast BEPO flux ratio is 29 for the reference values. Therefore, the ratio of the BEPO measured parameter (thermal neutron flux) is 1:29. The UFTR ratio of thermal neutron flux to fast neutron flux (from the UFTR Safety Analysis Report CORA calculations[1]) at the peak location is approximately 1:8.5; the ratio of peak centerline

thermal neutron flux to maximum fast neutron flux in graphite is about 1:2.5. Estimates of the UFTR peaking factor of 1.5-2.5 indicate the actual peak thermal neutron flux to maximum fast neutron flux may be as low as 1:6.3. Therefore, the factor that allows comparison of UFTR fluency with published data to determine the maximum Wigner energy storage in terms of BEPO equivalent flux is between 29/8.5 (3.41) and 29/6.3 (4.6) with the former to be used for conservative calculations.

The peak energy storage rate from the analysis presented in the generic hazards analysis for Argonaut-type reactors [5], adjusted to account for the different thermal to fast neutron flux ratios is between 0.14 cal/g-day and 0.18 cal/g-day at full power (100 kWth). For comparison purposes, Wigner stored energy has been measured for the UCLA Argonaut reactor at a peak of 33.5 cal/g after 21 MWD of operation,[24] whereas the expected value is between 39.6 cal/g and 29.4 cal/g stored energy based on the rate range of 0.18-0.14 cal/g-day at full power. This measured result is in good agreement with the prediction of this model and shows the validity of established energy storage models for Argonaut reactors.

An alternate approach to evaluating energy storage is to estimate the operating history required to achieve an arbitrary reference 100 cal/g peak stored energy by comparing the measured maximum stored energy at the UCLA Argonaut reactor from 21 MWD of exposure to established functions relating stored energy to units of exposure at specific irradiation temperatures [23]. Using linear average to provide constants for the (average) stored energy as a function of exposure (MWD per Adjacent ton of graphite) based on established data and the energy storage formula, 33 cal/g results from an exposure of 137 MWD/At, corresponding to UCLA power history of 21MWD. Therefore, a stored energy content of 100cal/g is predicted to result from an exposure of 440 MWD/At. This stored energy value should correspond to 67.5 MWD at UCLA. The UFTR Argonaut energy generation was 1.8 MWD during its most energy-productive year recorded, with 14.5 MWD of operation during the period of 1969 to 1985[24]. This operating history indicates that additional exposure of 53 MWD will produce a point in the UFTR with 100 cal/g of stored energy; 53 MWD allows 29 more years of operation if the most productive year can be matched for 29 years. Note that this produces a single point at 100 cal/g, and that 100 cal/g is an arbitrary low figure of merit, not a limit. The significance of the stored energy content is not a numerical value, but in the effect of a total, instantaneous release of that energy as discussed below.

13G.3 Maximum Temperature from Energy Release

In considering the effects of release of Wigner stored energy, several properties of the release mechanism and of graphite itself should be considered. In combination, these properties would reduce the effective increase in graphite temperature due to a Wigner stored energy release.

First, it should be noted that the theoretical and measured values of Wigner stored energy density are spatially distributed, exponentially decreasing from the peak value[25,

26]. This exponential decrease results in very small energy storage potential at the core centerline, a much-reduced average stored energy potential for all center island graphite and negligible average stored energy potential for all core graphite under any reasonably expected power history. Since temperature increases due to Wigner energy release are not point distributions, but rather an average energy release over some finite volume[25], it is inappropriate to define a temperature increase of the graphite in a sudden release of stored energy based on a point-maximum;[27] actual changes in graphite temperature should be determined from the average energy release over a finite volume (related to the heat of diffusion time constant of the graphite) which will produce a smaller temperature rise than the theoretical point maximum value.

Second, it should also be noted that Wigner energy releases are not instantaneous, but occur over seconds or minutes of time[23]. During the release process, some heat removal or dissipation is inevitable, resulting in somewhat lower graphite temperatures than would occur with an instantaneous release.

Third, it should be noted that not all stored energy could be released [23]. The release fraction is a complex function of the conditions leading to stored energy (such as temperature of the graphite during irradiation) and conditions that initiate the release (such as initiating temperature and specific heat of graphite at varying temperatures).

Fourth, graphite will not support self-sustained combustion at less than 650°C [23], with some estimates as high as 800°C [28] [29] in a steam atmosphere (expected during the postulated initiating event), and more reasonable estimates for dry graphite are in excess of 750°C[29] [30]. The energy required to heat the graphite from 40°C to 650°C, calculated as specified in NUREG/CR-2079 [5], is 195.9 cal/g. To heat the graphite to 650°C from its maximum operating temperature of 90°C would require about 190 cal/g.

Nevertheless, the following conservative analysis considers only the peak stored energy values for evaluating temperature increases resulting from complete and instantaneous release of that energy in order to define a maximum energy storage that will not raise graphite temperature to 650°C in the event of a total release of stored energy.

Release of stored energy can occur by heating the graphite to at least 50°C above the temperature of irradiation[23]. The postulated initiating event for a release of stored energy is a reactivity addition accident that produces 35 MW-seconds of energy [5] (at that point, fuel is calculated to undergo phase transformation terminating the overpower transient) initiated from operating at 100 kW steady-state [1], with primary coolant at 40°C, no contact resistance between the fuel box wall and the graphite, and abutting graphite temperature of 40°C (in order to provide an overestimate of gamma heating of the graphite as a function of power production). Thermal conductivity for graphite is considered to be at a minimum (0.6 cal/°C-cm-sec), and centerline graphite temperature at 100°C (approximate maximum value from measurements at UFTR) [30]. Assuming uniform distribution of gamma heating over 15 cm of graphite between the centerline and

the fueled region of the core, steady state heat generation at 100 kW is 1.45 cal/g. A 35 MWS transient then produces 50.9 cal/g heat generation in the center island graphite, causing a potential temperature increase from 90°C to 280°C.

This limiting transient, occurring over milliseconds, is not sufficient to produce temperatures of 650°C without an instantaneous release of stored energy greater than 145 cal/g. First, at the point of maximum energy storage, 100 cal/g will not occur at power histories of less than 53 MWD; second, the UFTR is not expected to achieve this 53 MWD energy generation history for at least 30 years. Therefore, Wigner stored energy does not represent a potential for initiating or supporting a graphite fire within the license period for the UFTR.

13G.4 Graphite Combustibility

Graphite will only "burn," actually oxidize, under a very controlled set of conditions [23] [31]. With a strong external heat source and a good oxygen supply, the surface of the graphite will burn starting at a temperature above 600°C. At the UFTR, there is no strong graphite heat source[1]; airflow across the graphite is restricted and essentially eliminated for the high stored-energy graphite [1] and the surface-to-volume ratio of the graphite and the pile strongly discourages combustion [31]. Recent experiments note that graphite heated in a furnace with forced air at 10 CFM will not flame, has internal temperature increase of 24°C, and only produces about 24 cal/sec [31]. In one case, thermite was fired inside a graphite crucible (3.7 kg) releasing 3000 Kcal of energy in 11 seconds. Peak temperature rose to 1426°C. When the thermite burn was completed, the graphite did not continue to burn [29]. Strong evidence has demonstrated repeatedly that graphite will not burn without a sustained heat source and will not undergo self-sustained burning except under specially controlled conditions.

The classic so-called graphite fires such as Windscale [31] were not principally graphite fires. Oxidation of fuel and fission product decay caused a heat producing system that burned the graphite. When the heat sources were removed, the graphite discontinued burning.

Any attempt to establish a scenario for a graphite fire at the UFTR is blocked by lack of an ignition source [5] [32] and physical characteristics of the UFTR system such as the large volume-to-surface ratio for the graphite [31], low exposure area of graphite surfaces to free air spaces [5], low air flow through reactor void spaces [1] [32], low operating temperatures, and low fission product inventory. As discussed in the UFTR Safety Evaluation Report, the NRC staff considers these scenarios to be such remote possibilities that they pose virtually no risk to the UFTR or to the health and safety of the public.[32]

13G.5 Summary Conclusions

In conclusion, an estimate of the maximum stored energy under an optimal schedule of operations indicates that UFTR core graphite does not have the potential to initiate or support a self-sustaining combustion process. Additionally, if enough energy storage did occur to support or sustain combustion, physical conditions of the UFTR as designed further prohibit combustion. Therefore, graphite fires whether from Wigner energy release or other sources are considered to be remote possibilities posing virtually no threat to the UFTR or to the health and safety of the public.

CHAPTER 14

TECHNICAL SPECIFICATIONS

Table of Contents

14 TECHNICAL SPECIFICATIONS

Section 50.36 of 10 CFR Part 50 requires that each operating license issued by the Nuclear Regulatory Commission contain Technical Specifications that set forth the limits, operating conditions, and other requirements imposed on facility operation for the protection of the health and safety of the public. The UFTR established Technical Specifications on July 22, 1970, according to Amendment 10 to Facility License R-56. More detailed relicensing Technical Specifications were established in 1982 and have been periodically updated up through Amendment 23 approved in December 2001.

The actual Technical Specifications (TS) for the UFTR included in this FSAR are an upgrade of the current set of TS to better satisfy NRC requirements, the ANSI/ANS 15.1-1990 Standard for the Development of Technical Specifications for Research Reactors and to better describe and establish limits for the facility safety-related and overall capabilities and especially to provide bases where none were listed previously.

Many of the design bases for setpoints and trip-points are historical for the UFTR and other Argonauts. Revisions of these specifications have been made to match and upgrade previous modifications and present capabilities of UFTR systems. For example, the primary coolant flow safety limit has been historically set at 18 gpm and proven sufficiently conservative safety-wise; however, the actual UFTR trip setpoint for primary coolant flow has been 30 gpm for the past twenty-five years (after improvements to the reactor coolant system) and has therefore been established as the TS trip setpoint for coolant flow.

The selection of the UFTR trip-points follows a conservative and practical approach to the operational safety of the UFTR, often without the liberalization of margin/ setpoints resulting from detailed analysis and measurements. Operating experience demonstrates that the historical and upgraded setpoints will maintain fuel and coolant temperatures well within conservative safety limits.

The definition of Abnormal Occurrences in the TS, Section 1.1 is intended to address specifically those occurrences which have potential safety significance, or could lead the reactor to be operated in violation of a Safety Limit, a Limiting Safety System Setting or in violation of a Limiting Condition for Operation. In this regard, occurrences affecting the reactivity of the reactor which are due to the expected and proper functioning of the Control and Safety System are not considered to be "an uncontrolled or unanticipated change in reactivity as in section 1.1(5) where reactor trips resulting from a known cause are excluded from the definition of abnormal occurrences." Therefore, the following situations are accepted as normal regarding reactivity insertions:

- Reactor trips caused by loss of power to the reactor console or to any component of the Control and Safety Systems when the systems respond as specified.

- Reactor trips caused by operator, operator-in-training, or student trainee, or induced by failsafe components when the Reactor Safety System is performing its intended function.

- The controlling actions of an operator, operator-in-training, or student trainee and occurrences which do not result in Safety System actuation and do not violate Limiting Conditions for Operation.

APPENDIX 14.1

TECHNICAL SPECIFICATIONS

Table of Contents

Index of Tables

Index of Figures

TECHNICAL SPECIFICATIONS
FOR THE
UNIVERSITY OF FLORIDA TRAINING REACTOR

1.0 GENERAL

The University of Florida Training Reactor (UFTR) is operated by the Department of Nuclear and Radiological Engineering of the University of Florida. The UFTR is a non-power reactor used for instructional and research activities. The reactor is a modified Argonaut type, a light water and graphite moderated, graphite reflected, light water cooled reactor and operates at a nominal maximum steady state power level of 100 kWth.

1.1 Definitions

Abnormal Occurrences: An abnormal occurrence is any one of the following:

(1) operating the reactor with a safety system setting less conservative than specified in the Limiting Safety System Setting section of the Technical Specifications;

(2) operating the reactor in violation of a limiting condition for operation;

(3) a malfunction of a safety system component or other component or system malfunction that could, or threatens to, render the system incapable of performing its intended safety function;

(4) a release of fission products from the reactor fuel of a magnitude to indicate a failure of the fuel cladding;

(5) an uncontrolled or unanticipated change in reactivity greater than one dollar (Reactor trips resulting from a known cause are excluded.);

(6) an observed inadequacy in the implementation of either administrative or procedural controls such that the inadequacy could have caused the existence or development of an unsafe condition in connection with the operation of the reactor;

(7) an uncontrolled or unanticipated release of radioactivity to the environment.

Blade-Drop Time: The blade-drop time is the elapsed time between the instant a limiting safety system set point is reached or a manual scram is initiated and the instant that the blade is fully inserted.

Certified Operator: An individual authorized by the Nuclear Regulatory Commission to carry out the duties and responsibilities associated with the position requiring the certification.

Channel Calibration: A channel calibration is an adjustment of the channel components such that its output responds, within specified range and accuracy, to known values of the parameter which the channel measures. Calibration shall encompass the entire channel, including readouts, alarms, or trips.

Channel Check: A channel check is a qualitative verification of acceptable performance by observation of channel behavior. This verification shall include comparison of the channel with other independent channels or methods of measuring the same variable.

Channel Test: A channel test is the introduction of an input signal into the channel to verify that it is operable.

Confinement: Confinement means a closure on the reactor room air volume such that the movement of air into it and out of the reactor room is through a controlled path.

Independent Experiment: An independent experiment is one that is not connected by a mechanical, chemical, or electrical link.

Inhibit: An inhibit is a device that prevents the withdrawal of control blades under a potentially unsafe condition.

Measured Value: The measured value of a parameter is the value as it appears at the output of a measuring channel.

Measuring Channel: The measuring channel is the combination of sensor, lines, amplifiers, and output devices that are connected for the purpose of measuring the value of a process variable.

Movable Experiment: A movable experiment is one where it is intended that the entire experiment may be moved in or near the core or into and out of the reactor while the reactor is operating, or having incore components during operation.

Nonsecured Experiment: A nonsecured experiment, where it is intended that the experiment should not move while the reactor is operating, is held in place with less restraint than a secured experiment.

Operable: A system or component is operable when it is capable of performing its intended function in a normal manner.

Operating: A system or component is operating when it is performing its intended function in a normal manner.

Reactor Operating: The reactor is considered to be operating whenever it is not secured or shutdown.

Reactor Operator (Class B Reactor Operator): Any individual who is certified to manipulate the controls of the reactor.

Reactor Safety System: The reactor safety system is that combination of measuring channels and associated circuitry that are designed to initiate automatic protective action or to provide information for initiation of manual protective action.

Reactor Secured: The reactor is secured when it contains insufficient fissile material or moderator present in the reactor, adjacent experiments or control blades, to attain criticality under optimum available conditions of moderation and reflection,

or

(1) the reactor is shutdown, (2) electrical power to the control blade circuits is switched off and the switch key is in proper custody, (3) no work is in progress involving core fuel, core structure, installed control blades or control blade drives unless they are physically decoupled from the control blades, and (4) no experiments are being moved or serviced that have, on movement, a reactivity worth exceeding the maximum value allowed for a single experiment or one dollar, whichever is smaller.

Reactor Shutdown: The reactor is shut down when all control blades are inserted and the reactor is subcritical by a margin greater than 2%$\Delta k/k$. When calculating the subcritical margin, no credit shall be taken for experiments, temperature effects or xenon poisoning.

Reactor Startup: A reactor startup is a series of operator manipulations of reactor controls (in accordance with approved procedures) intended to bring the reactor to a k_{eff} of 0.99 or greater. It does not include control blade manipulations made for purposes of testing equipment or component operability within a k_{eff} of 0.99 or less.

Reactor Trip: A reactor trip is considered to occur whenever one of the following two actions take place:

(1) Blade-Drop Trip — a gravity drop of all control blades into the reactor core as a result of terminating electrical power to the blade drive magnetic clutches.

(2) Full-Trip — the water is dumped from the reactor core by the safety actuation of the dump valve in addition to the blade-drop trip.

Reference Core Condition: The condition of the core when it is at ambient cold temperature (~20°C) and the reactivity worth of xenon is negligible (cold, clean of xenon and critical).

Reportable Occurrence: A reportable occurrence is any of the conditions described in Section 6.7.2 of this specification.

Research Reactor: A research reactor is a device designed to support a self-sustaining neutron chain reaction to supply neutrons or ionizing radiation for research, developmental, educational, training, or experimental purposes, and which may have provisions for the production of nonfissile radioisotopes.

Safety Channel: A safety channel is a measuring channel in the reactor safety system.

Secured Experiment: A secured experiment is a stationary experiment held firmly in place by a mechanical device secured to the reactor structure or by gravity, providing that the weight of the experiment is such that it cannot be moved by a force of less than 60 lb.

Secured Experiment with Movable Parts: A secured experiment with movable parts is one that contains parts that are intended to be moved while the reactor is operating.

Senior Reactor Operator (Class A Reactor Operator): Any individual who is certified to direct the activities of Reactor Operators (Class B reactor operators); such an individual is also a reactor operator.

Should, Shall, and May: The word "shall" is used to denote a requirement; the word "should" to denote a recommendation; and the word "may" to denote permission, neither a requirement nor a recommendation.

Shutdown Margin: Shutdown margin is the minimum shutdown reactivity necessary to provide confidence that the system can be made subcritical by means of the control and safety systems starting from any permissible operating condition and with the most reactive blade in its most reactive position, and that the reactor will remain subcritical without further operator action.

Shutdown Reactivity: Shutdown reactivity is the value of the reactivity of the reactor with all control blades in their least reactive positions (e.g., all inserted). The value of the shutdown reactivity includes the reactivity value of all installed experiments and is determined with the reactor at ambient conditions.

Unscheduled Shutdown: An unscheduled shutdown is any unplanned shutdown of the reactor after startup has been initiated.

2.0 SAFETY LIMITS AND LIMITING SAFETY SYSTEM SETTINGS

2.1 Safety Limits

Safety limits for nuclear reactors are limits upon important process variables that are found to be necessary to reasonably protect the integrity of certain of the physical barriers that guard against the uncontrolled release of radioactivity. The principal physical barrier shall be the fuel cladding.

Applicability: These specifications apply to the variables that affect thermal, hydraulic, and materials performance of the core.

Objective: To ensure fuel cladding integrity.

Specifications:

(1) The steady-state power level shall not exceed 100 kWth.

(2) The primary coolant flow rate shall be greater than 18 gpm at all power levels greater than 1 watt.

(3) The primary coolant outlet temperature from any fuel box shall not exceed 200°F.

(4) The specific resistivity of the primary coolant water shall not be less than 0.4 megohm-cm for periods of reactor operation exceeding four (4) hours.

Bases: Operating experience and detailed calculations of Argonaut reactors have demonstrated that Specifications (1) and (2) suffice to maintain the maximum fuel temperature below 200°F, which is well below the temperature at which fuel degradation would occur. For the readily available flow rate of up to 65 gpm, it has been shown that the fuel temperature will be well below 200°F for steady-state power operation of up to 500 kWth. No fuel damage is known to occur from transient operation up to 500% full power at the present 40 - 45 gpm primary coolant flow rate. Specification (3) is included to prevent boiling of the primary coolant at any fuel box. Specification (4) suffices to maintain adequate water quality conditions to prevent deterioration of the fuel cladding and still allow for expected transient changes in the water resistivity.

2.2 Limiting Safety System Settings

Limiting safety system settings for nuclear reactors are settings for automatic protective devices related to those variables having significant safety functions.

Applicability: These specifications are applicable to the reactor safety system setpoints.

Objective: To ensure that automatic protective action is initiated before exceeding a safety limit or before creating a radioactive hazard that is not considered under safety limits.

Specifications: The limiting safety system settings shall be

(1) Power level at any flow rate shall not exceed 125 kWth.

(2) The primary coolant flow rate shall be greater than 30 gpm at all power levels greater than 1 watt.

(3) The average primary coolant outlet temperature shall not exceed 155°F when measured at any fuel box outlet.

(4) The reactor period shall not be faster than 3 sec.

(5) The high voltage applied to Safety Channels 1 and 2 neutron chambers shall be 90% or more of the established normal value.

(6) The primary coolant pump shall be energized during reactor operations.

(7) The primary coolant flow rate shall be monitored at the return line.

(8) The primary coolant core level shall be at least 2 in. above the fuel.

(9) The Secondary coolant flow shall satisfy one of the following two conditions when the reactor is being operated at power levels equal to or larger than 1 kW:

(a) Power shall be provided to the well pump and the well water flow rate shall be larger than 60 gpm when using the well system for secondary cooling;

or

(b) The water flow rate shall be larger than 8 gpm when using the city water system for secondary cooling.

(10) The reactor shall be shut down when the main alternating current (AC) power is not operating.

(11) The reactor vent system shall be operating during reactor operations.

(12) The water level in the shield tank shall not be reduced 6 in. below the established normal level.

Bases: The University of Florida Training Reactor (UFTR) limiting safety system settings (LSSS) are established from operating experience and safety considerations. The

LSSS 2.2 (1) through (10) are established for the protection of the fuel, the fuel cladding, and the reactor core integrity. The primary and secondary bulk coolant temperatures, as well as the outlet temperatures of at least four of the six fuel boxes, are monitored and recorded in the control room. LSSS 2.2 (11) is established for the protection of reactor personnel in relation to accumulation of argon-41 in the reactor cell and for the control of radioactive gaseous effluents from the cell. LSSS 2.2 (12) is established to protect reactor personnel from potential external radiation hazards caused by loss of biological shielding.

3.0 LIMITING CONDITIONS FOR OPERATION

Limiting conditions for operation are the lowest functional capabilities or performance levels required of equipment for safe operation of the facility.

3.1 Reactor Core Parameters

Applicability: These specifications apply to the parameters which describe the reactivity condition of the core.

Objectives: To ensure that the reactor cannot achieve prompt criticality, that the fuel temperature does not reach melting point, that the reactor can be safely shutdown under any condition and to limit the reactivity insertion rate to levels commensurable with efficient and safe reactor operation .

Specifications: The reactor shall not be critical unless the following conditions exist:

(1) Shutdown Margin: The minimum shutdown margin, with the most reactive control blade fully withdrawn, shall not be less than 2% $\Delta k/k$.

(2) Excess Reactivity: The core excess reactivity at cold critical, without xenon poisoning, shall not exceed 2.3% $\Delta k/k$.

(3) Coefficients of Reactivity: The primary coolant void and temperature coefficients of reactivity shall be negative.

(4) Maximum Single Blade Reactivity Insertion Rate: The reactivity insertion rate for a single control blade shall not exceed 0.06% $\Delta k/k$/sec, when determined as an average over any 10 sec of blade travel time from the characteristic experimental integral blade reactivity worth curve.

(5) Experimental Limitations: The reactivity limitations associated with experiments are specified in Section 3.6 of these specifications.

Bases: Specification (1) ensures that a reactor shutdown can be established with the most reactive blade out of the core. Specification (2) is based on analysis documented in SAR Chapter 4, Section 4.1.2 and Chapter 13 to prevent that an inadvertent sudden excess reactivity insertion release enough energy to melt the fuel. Specification (3) is based on safe inherently controlling requirements for operation of reactors. Specification (4) limits the reactivity insertion rate to levels commensurate with efficient and safe reactor operation and Specification (5) is based on the reactor control system capabilities (20-sec positive period limitation). These limits are also established based on extensive UFTR operating experience.

3.2 Reactor Control and Safety Systems

Applicability: These specifications apply to the reactor control and safety systems.

3.2.1 Reactor Control System

Objectives: To specify minimum acceptable equipment requirements and capability for the reactor control system, range of reactivity insertion rate and interlocks to assure safe operation of the reactor.

Specifications:

(1) Four cadmium-tipped, semaphore-type blades shall be used for reactor control. The control blades shall be protected by shrouds to ensure freedom of motion.

(2) Only one control blade can be raised by the manual reactor controls at any one time. The safety blades shall not be used to raise reactor power simultaneously with the regulating blade when the reactor control system is in the automatic mode of operation.

(3) A reactor startup shall not be commenced unless the reactor control system is operable. The reactor may be operated without the autocontroller function available provided the autocontroller is not needed and not used for the operation.

(4) The control-blade-drop time shall not exceed 1.5 sec from initiation of blade drop to full insertion (blade-drop time), as determined according to surveillance requirements.

(5) The following control blade withdrawal inhibit interlocks shall be operable for reactor operation for the following conditions:

   (a) a source (startup) count rate of less than 2 cps (as measured by the wide range drawer operating on extended range).

   (b) a reactor period less than 10 sec.

   (c) safety channels 1 and 2 and wide range drawer calibration switches not in OPERATE condition.

   (d) attempt to raise any two or more blades simultaneously when the reactor is in manual mode, or two or more safety blades simultaneously when the reactor is in automatic mode.

(e) power is raised in the automatic mode at a period faster than 30 sec. (The automatic controller action is to inhibit further regulating blade withdrawal or drive the regulating blade down until the period is ≥30 sec.)

(6) Following maintenance or modification to the reactor control system, an operability test and calibration of the affected portion of the system, including verification of control blade drive speed, shall be performed before the system is considered operable.

Bases: The operator has available digital control blade position indicators for the three safety blades and the regulating blade. The three safety blades can only be manipulated by the UP-DOWN blade switches (manual); the regulating blade can be manually controlled or placed under automatic control, which uses the linear channel as the measuring channel, and a percent of power setting control. Specifications (1) and (4) ensure that the reactor can be shut down promptly when a scram signal is initiated. Specification (2) ensures there is no possibility to reach a prompt critical condition and to limit the reactivity insertion rate to levels commensurable with efficient and safe reactor operation. Specification (3) ensures the reactor control system operability for startup. Specification (5) (a), (b), (d) and (e) ensure that blade movement is performed under proper monitoring with assured source count rate and safe period either under manual or automatic control. Specification (5) (c) ensures that the operator is monitoring the power increase during blade movement. Specification (6) ensures checking for proper functioning of the control blade system prior to operations after maintenance has been conducted.

3.2.2 Reactor Safety System

Objective: To ensure that sufficient information is available to the operator to assure safe operation of the reactor.

Specifications:

(1) The reactor shall not be started unless the reactor safety system is operable in accordance with Table 3-1.

(2) Tests for operability shall be made in accordance with Table 3-2.

Bases: Specification (1) ensures that no operation will be performed under abnormal conditions as listed in Table 3-1 and that the necessary reactor control system trip functions are operable in case of occurrence of any of these conditions. The two independent reactor safety channels provide redundant protection and information on reactor power in the range 1%-150% of full power. The linear power channel is the most accurate neutron instrumentation channel and also provides a signal for reactor control in automatic mode. The percent of power information is displayed by the linear channel two-pen recorder. It does not provide a protective function. The log wide range drawer

provides a series of information, inhibit, and protection functions from extended source range to full power. The safety channel 1 signal and the period protection signal are derived from the wide range drawer. The wide range drawer provides protection during startup through the source count rate interlock (2 cps), 10-sec period inhibit and the 3-sec period trip. The primary and secondary coolant flow rate, temperature and level sensing instrumentation provide information and protection over the entire range of reactor operations and is proven to be conservative from a safety viewpoint. The key switch prevents unauthorized operation of the reactor and is an additional full trip (manual scram) control available to the operator. The core level trip provides redundant protection to the primary flow trip. The core level trip acts as an inhibit during startup until the minimum core water level is reached. As stated in Section 2, these limits were set based on operating experience and safety considerations.

Specification (2) ensures proper surveillance of the components of the reactor safety system and scram functions to assure operability.

3.2.3 Reactor Control and Safety Systems Measuring Channels

Objective: To specify the minimum number and type of acceptable measuring channels for the reactor safety system and safety related instrumentation.

Specification: The minimum number and type of measuring channels operable and providing information to the control room operator required for reactor operation are presented in Table 3-3.

Bases: Table 3-3 specifies the minimum number of acceptable components for the reactor safety system and related instrumentation to assure the proper functioning of the reactor safety systems as specified in SAR Chapter 7.

3.3 Reactor Coolant System

Applicability: These specifications apply to the reactor cooling system and water in contact with fuel plates or elements.

Objective: To ensure that adequate cooling is provided to maintain the fuel temperature below the limiting safety system settings with water of high quality to minimize corrosion of the aluminum cladding of fuel plates as well as activation of dissolved materials and corrosion products.

Specifications:

(1) Primary water temperature shall not exceed 155°F in accordance with Table 3-1.

(2) Primary water shall be demineralized, light water with a specific resistivity of not less than 0.5 megohm-cm after the reactor is operated for more than 6 hr.

(3) Primary equipment pit water level sensor shall alarm in the control room whenever a detectable amount of water (1 in. above floor level) exists in the equipment pit.

(4) Primary coolant level switch shall annunciate in the control room whenever the water level in the core falls below 42.5 inches in accordance with Table 3-1.

(5) The primary and secondary flow rates shall be maintained as specified in Table 3-1.

Basis: Specifications 3.3(1) and 3.3(2) are designed to protect the fuel element integrity and are based upon operating experience. At the specified quality, the activation products (of trace minerals) do not exceed acceptable limits. Specifications 3.3 (3) and 3.3 (4) are designed to alert the operator to potential loss of primary coolant, to prevent reactor operations with a reduced water inventory, and to minimize the possibility of an uncontrolled release of primary coolant to the environs. Specification 3.3 (5) is designed to assure adequate cooling of the fuel plates.

3.4 Reactor Vent System

Applicability: These specifications apply to the equipment required for controlled release of gaseous radioactive effluent to the environment via the stack or its confinement within the reactor cell.

Objective: To limit the amount and concentration of radioactivity in effluent from the reactor cell and reduce the back leakage of radioactivity into the reactor cell under normal operations and from the cell under emergency conditions.

Specifications:

(1) The reactor vent system shall be operated at all times during reactor operation. In addition, the vent system shall be operated until the stack monitor indicates less than 10 counts per second (cps) unless otherwise indicated by facility conditions to include loss of building electrical power, equipment failure or maintenance, cycling console power to dump primary coolant or to conduct tests and surveillances and initiating the evacuation alarm for tests and surveillances including emergency drills and demonstrations. The reactor vent system shall be immediately secured upon detection of: a failure in the monitoring system, a failure of the absolute filter, or an unanticipated high stack count rate.

(2) The reactor vent system shall be capable of maintaining an air flow rate between 1 and 400 cfm from the reactor cavity whenever the reactor is operating and as specified in these Technical Specifications.

(3) The diluting fan shall be operated whenever the reactor is in operation and as otherwise specified in these Technical Specifications, at an exhaust flow rate larger than 10,000 cfm.

(4) The air conditioning/ventilation system and reactor vent system are automatically shut off whenever the reactor building evacuation alarm is automatically or manually actuated.

(5) All doors to the reactor cell shall normally be closed while the reactor is operating. Transit is not prohibited through the exit chamber and control room doors.

(6) The reactor vent system shall have a backup means for quantifying the radioactivity in the effluent during abnormal or emergency operating conditions where venting could be used to reduce cell radionuclide concentrations for ALARA considerations.

Bases: Under normal conditions, to effect controlled release of gaseous activity through the reactor vent system, a negative cell pressure is required so that any building leakage will be inward. Under normal shutdown conditions with significant Argon-41 inventory in the reactor cavity, operation of the core vent system prevents unnecessary exposure from gas leakage back into the cell. Under emergency conditions, the reactor vent system will be shut down and the damper closed, thus minimizing leakage of radioactivity from the reactor cell unless venting is required.

3.5 Radiation Monitoring Systems and Radioactive Effluents

Applicability: These specifications apply to the radiation monitoring systems and to the limits on radioactive effluents.

Objective: To specify the minimum equipment or the lowest acceptable level of performance for the radiation monitoring systems and limits for effluents.

Specifications: The reactor shall not be operated unless the conditions presented in Sections 3.5.1 through 3.5.6 are met.

3.5.1 Area Radiation Monitors

The reactor cell shall be monitored by at least three area radiation monitors, two of which shall be capable of audibly warning personnel of high radiation levels. The output of at least two of the monitors shall be indicated and recorded in the control room. The number

required and setpoints for the radiation monitors shall be in accordance with Table 3-4 including more conservative setpoints if desired.

3.5.2 Argon-41 Discharge

The following operational limits are specified for the discharge of Argon-41 to the environment:

(1) The concentration of Argon-41 in the gaseous effluent discharge of the UFTR is determined by averaging it over a consecutive 30-day period.

(2) The dilution resulting from the operation of the stack dilution fan (flow rate of 10,000 cfm or more) and atmospheric dilution of the stack plume (a factor of 200) may be taken into account when calculating this concentration.

(3) When calculated as above, discharge concentration of Argon-41 shall not exceed 1.0×10^{-8} μCi/ml. Operation of the UFTR shall be such that this maximum concentration (averaged over a month) is not exceeded.

3.5.3 Reactor Vent/Stack Monitoring System

(1) Whenever the reactor vent system is operating, air drawn through the reactor vent system shall be continuously monitored for gross count rate of radioactive gases. The output of the monitor shall be indicated and recorded in the control room. Operable functions and alarm settings shall be as delineated in Table 3-4.

(2) Whenever venting is to be used to reduce cell radionuclide concentrations during abnormal or emergency conditions, then the radioactivity in the effluent shall be quantified prior to initiating controlled venting.

(3) Whenever significant changes are noted, the reactor air cavity flow may be periodically analyzed to minimize Argon-41 releases to the environment while maintaining a negative pressure within the reactor cavity to minimize potential radioactive hazards to reactor personnel.

3.5.4 Air Particulate Monitor

The reactor cell environment shall be monitored by at least one air particulate monitor, capable of audibly warning personnel of radioactive particulate airborne contamination in the cell atmosphere. Operable functions and alarm settings shall be as delineated in Table 3-4.

3.5.5 Liquid Effluents Discharge

The above ground (external) waste water holdup tank and the internal condensate tanks(s) shall be available to collect potentially contaminated liquid effluents. The liquid effluent from the aboveground holdup tank shall be sampled and the radioactivity measured before release to the sanitary sewage system which is allowed in conformance with 10 CFR 20.1301. Releases of radioactive effluents from the external waste water holdup tank shall be in compliance wit the limits specified in 10 CFR 20, Appendix B, Table 2, Column 2, as specified in 10 CFR 20.1302.

3.5.6 Bases

The area radiation monitoring system, stack monitoring system and air particulate detector provide information to the operator indicating radiation and airborne contamination levels under the full range of operating conditions. Audible indicators and alarm lights indicate (via monitored parameters) when corrective operator action is required, and (in the case of the area radiation monitors) a warning light indicates situations recommending or requiring special operator attention and evaluation. Argon-41 discharges are limited to a monthly average which is less than the effluent concentration limit in 10 CFR 20, Appendix B, Table 2, and liquid and solid radioactive wastes are regulated and controlled to assure compliance with legal requirements.

3.6 Limitations on Experiments

Applicability: These specifications apply to all experiments or experimental devices installed in the reactor core or its experimental facilities.

Objectives: The objectives are to assure operational safety and prevent damage to the reactor facility, reactor fuel, reactor core, and associated equipment; to prevent exceeding the reactor safety limits; and to minimize potential hazards from experimental devices.

Specifications:

(1) General

The reactor manager and the radiation control officer (or their duly appointed representatives) shall review and approve in writing all proposed experiments prior to their performance. The reactor manager shall refer to the Reactor Safety Review Subcommittee (RSRS) the evaluation of the safety aspects of new experiments and all changes to the facility that may be necessitated by the requirements of experiments that may have safety significance. When experiments contain hazardous materials or substances which, upon irradiation in the reactor, can be converted into a material with significant potential hazards, a determination will be made about the acceptable reactor power level and length of

irradiation, taking into account such factors as: isotope identity and chemical and physical form and containment; toxicity; potential for contamination of facility or environment; problems in removal or handling after irradiation including containment; transfer; and eventual disposition. Guidance should be obtained from the ANS 15.1- 1990 "The Development of Technical Specifications for Research Reactors". Experimental apparatus, material, or equipment to be inserted in the reactor shall be reviewed to ensure compatibility with the safe operation of the reactor.

(2) Classification of Experiments

Class I —Routine experiments, such as gold foil irradiation. This class shall be approved by the reactor manager; the radiation control officer may be informed if deemed necessary.

Class II— Relatively routine experiments that need to be documented for each new group of experimenters performing them, or whenever the experiment has not been carried out for one calendar year or more by the original experimenter, and that pose no hazard to the reactor, the personnel, or the public. This class shall be approved by the reactor manager and the radiation control officer.

Class III— Experiments that pose significant questions regarding the safety of the reactor, the personnel, or the public. This class shall be approved by the reactor manager and the radiation control officer, after review and approval by the Reactor Safety Review Subcommittee (RSRS).

Class IV — Experiments that have a significant potential for hazard to the reactor, the personnel, or the public. This class shall be approved by the reactor manager and radiation control officer after review and approval by the RSRS and specific emergency operating instructions shall be established for conducting the experiments.

(3) Reactivity Limitations on Experiments

(a) The absolute reactivity worth of any single movable or nonsecured experiment shall not exceed 0.6% $\Delta k/k$.

(b) The total absolute reactivity worth of all experiments shall not exceed 2.3%$\Delta k/k$.

(c) When determining the absolute reactivity worth of an experiment, no credit shall be taken for temperature effects.

(d) An experiment shall not be inserted or removed unless all the control blades are fully inserted or its absolute reactivity worth is less than that which could cause a positive 20-sec stable period.

(4) Explosive Materials

Explosive materials may be irradiated in limited quantities provided the experiment has been reviewed and approved by the RSRS.

(5) Thermal-Hydraulic Effects

Experiments shall be designed so that during normal operation, or failure, the thermal hydraulic parameters of the core do not exceed the safety limits.

(6) Chemical Effects

Experiments shall be designed so that during normal operation, or failure, the physical barrier described in Section 2.1 will not be compromised by either chemical or blast effects from the experiment.

(7) Fueled Experiments

A limit should be established on the inventory of fission products in any experiment containing fissile material, according to its potential hazard and as determined by the RSRS.

(8) Radioactive Releases from Experiments

Class III and Class IV experiments shall be evaluated for their potential release of airborne radioactivity and limits shall be established for the permissible concentration of radioisotopes in the experiments, according to the 10 CFR 20 limitations for exposure of individuals in restricted and unrestricted areas.

Bases: The general specifications ensure that an adequate review process is followed to determine the safety, conditions, and procedures for all experiments. The classification of experiments clearly delineates the responsibility for approving experiments according to their potential hazards, to ensure that potentially hazardous experiments are analyzed for their safety implications, and that appropriate procedures are established for their execution. The reactivity limitations on experiments are established to prevent prompt criticality by limiting the worth of movable or nonsecured experiments, to prevent a reactivity insertion larger than the stipulated maximum step reactivity insertion in the accident analysis, and to allow for reactivity control of experiments within the reactor control system capabilities (20-sec positive period limitation). These specifications limit the irradiation of explosive materials. Explosive materials are defined as those materials normally used to produce explosive or detonating effects, materials that can chemically combine to produce explosion or detonations, or any materials that can undergo explosive decomposition under influence of neutron, gamma, or heat flux of the reactor or as defined by applicable standards. These specifications also limit the amount of fissile

materials that can be irradiated in the reactor according to its potential hazard and the reactor system's capability to handle a potential release to the cell environment.

3.7 Reactor Building Evacuation Alarm

Applicability: These specifications apply to the systems and equipment required for the evacuation of the reactor cell and the reactor building (including the reactor annex).

Objective: To specify conditions to actuate the evacuation alarm.

Specifications: The reactor cell and the reactor building shall be evacuated when any of the following conditions exist:

(1) The evacuation alarm is actuated automatically when two area radiation monitors alarm high (≥25 mrem/hr) in coincidence.

(2) The evacuation alarm is actuated manually when an air particulate monitor is in a valid alarm condition.

(3) The evacuation alarm is actuated manually when a reactor operator detects a potentially hazardous radiological condition and preventive actions are required to protect the health and safety of operating personnel and the general public.

Basis: To provide early and orderly evacuation of the reactor cell and the reactor building and to minimize radioactive hazards to the operating personnel and reactor building occupants.

3.8 Fuel and Fuel Handling

Applicability: These specifications apply to the arrangement of fuel elements in core and in storage, as well as the handling of fuel elements.

Objectives: The objectives are to establish the maximum core loading for reactivity control purposes, to establish the fuel storage conditions, and to establish fuel performance and fuel-handling specifications with regard to radiological safety considerations.

Specifications:

(1) The maximum fuel loading shall consist of 24 full fuel elements consisting of 11 plates each containing enriched uranium and clad with high purity aluminum.

(2) Fuel element loading and distribution in the core shall comply with approved fuel-handling procedures.

(3) Fuel elements exhibiting release of fission products because of cladding rupture shall, upon positive identification, be removed from the core. Fission product contamination of the primary water shall be treated as evidence of fuel element failure.

(4) The reactor shall not be operated if there is evidence of fuel element failure.

(5) All fuel shall be moved and handled in accordance with approved procedures.

(6) Fuel elements or fueled devices shall be stored and handled out of core in a geometry such that the k_{eff} is less than 0.8 under optimum conditions of moderation and reflection.

(7) Irradiated fuel elements or fueled devices shall be stored so that temperatures do not exceed design values.

Basis: The fuel loading is based on the present fuel configuration. The reactor systems do not have adequate engineering safeguards to continue operating with a detectable release of fission products into the primary coolant. The fuel is to be stored in a safe configuration and shall be handled according to approved written procedures for radiological safety purposes and adherence to limiting radiation dose to as low as is reasonably achievable (ALARA).

3.9 Radiological Environmental Monitoring Program

Applicability: This specification applies to the environmental radioactivity surveillances and surveys conducted by UFTR personnel and Radiation Control and Radiological Services Department personnel.

Objectives: The UFTR Radiological Environmental Monitoring Program is conducted to ensure that the radiological environmental impact of reactor operations is as low as reasonably achievable (ALARA); it is conducted in addition to the radiation monitoring and effluents control specified under Section 3.5 of these Technical Specifications.

Specifications: The Radiological Environmental Monitoring Program shall be conducted as specified below and under the supervision of the radiation control officer.

(1) Monthly environmental radiation dose surveillance outside the restricted area shall be conducted by measuring the gamma doses at selected fixed locations surrounding the UFTR complex with acceptable personnel monitoring devices. A minimum of six independent locations shall be used. A review of potential causes shall be conducted whenever a measured dose of over 40 mrem/month at two or more locations is determined and a report shall be submitted to the RSRS for review.

(2) Radioactivity surveillance of the restricted area (reactor cell) shall be conducted as follows:

(a) Surface contamination in the restricted area shall be measured by taking random swipes in the reactor cell during the weekly checkout. Measured surface contamination greater than 100 dpm/100cm^2 beta-gamma or greater than 50 dpm/100 cm^2 alpha are action levels requiring review and possible radiological safety control actions.

(b) Airborne particulate contamination shall be measured using a high volume air sampler during the weekly checkout. Measured radioactive airborne contamination 25% above mean normal levels is an action level requiring review and possible radiological safety control actions.

(3) The following radiation surveys, using portable radiation monitors, are limiting conditions for operation:

(a) Surveys measuring radiation dose rates in the restricted area shall be conducted quarterly, at intervals not to exceed 4 months, and at any time a change in the normal radiation levels is noticed or expected. Radiation exposures shall be maintained within 10 CFR 20 limits for radiation workers.

(b) Surveys measuring the radiation dose rates in the unrestricted areas surrounding the UFTR complex shall be conducted quarterly, at intervals not to exceed 4 months, and at any time a change in the normal radiation levels is noticed or expected. Dose rates shall be within 10 CFR 20 limits for the general public.

Bases: The bases for establishing the Radiological Environmental Surveillance Program are the established limits for internal and external radiation exposure and requirements that radiation doses be maintained ALARA and the necessity to confirm UFTR operations are conducted to be within the established limits.

Table 3-1 Specifications for Reactor Safety System Trips

Specification	Type of Safety System Trip
<u>Automatic Trips</u>	
Period less than 3 sec	Full
Power at 125% of full power	Full
Loss of chamber high voltage (≥10%)	Full
Loss of electrical power to control console	Full
Primary Cooling System	Blade-Drop
Loss of pump power Low water level in core (< 42.5") No outlet flow Low inlet water flow (< 30 gpm)	
Secondary Cooling System (at power levels above 1 kW)	Blade-Drop
Loss of flow (well water < 60 gpm, city water < 8 gpm) Loss of pump power	
High Primary Coolant Average Outlet Temperature (≥155°F)	Blade-Drop
Shield Tank	Blade-Drop
Low water level (6" below established normal level)	
Ventilation System	Blade-Drop
Loss of power to dilution fan Loss of power to core vent system	
<u>Manual Trips</u>	
Manual scram bar	Blade-drop
Console key-switch OFF (two blades off bottom)	Full

Table 3-2 Safety System Operability Tests

Component or Scram Function	Frequency
Log-N period channel Power level safety channels	Before each reactor startup following a shutdown in excess of 6 hours, and after repair or deenergization caused by a power outage
10% reduction of safety channels high voltage	4/year (4-month maximum interval)
Loss of electrical power to console	4/year (4-month maximum interval)
Loss of primary coolant pump power	4/year (4-month maximum interval)
Loss of primary coolant level	4/year (4-month maximum interval)
Loss of primary coolant flow	4/year (4-month maximum interval)
High average primary coolant outlet temperature	With daily checkout
Loss of secondary coolant flow (at power levels above 1 kW)	With daily checkout
Loss of secondary coolant well pump power	4/year (4-month maximum interval)
Loss of shield tank water level	4/year (4-month maximum interval)
Loss of power to vent system and dilution fan	4/year (4-month maximum interval)
Manual scram bar	With daily checkout

Table 3-3 Minimum Number and Type of Measuring Channels Operable

Channel	No. operable
Safety 1 and 2 power channel	2
Linear Channel (with auto controller as appropriate)	1
Log N and period channel*	1
Startup channel*	1
Blade position indicator	4
Coolant flow indicator	1
Coolant temperature indicator	
Primary	6
Secondary	1
Core level	1
Ventilation system	
Core vent annunciator	1
Dilute fan annunciator	1
Dilute fan rpm	1

*Subsystems of the wide range drawer

Table 3-4 Radiation Monitoring System Settings

Type	No. of Required Operable Functions	Alarm(s) Setting	Purpose
Area Radiation Monitors	3 detecting 2 audioalarming 2 recording	5 mr/hr low level 25 mr/hr high level	Detect/alarm/record low and high level external radiation
Air Particulate Monitors	1 detecting 1 audioalarming 1 recording	Range adjusted according to APD* type (according to monitoring requirements	Detect/alarm/record airborne radioactivity in the reactor cell
Stack Radiation Monitor	1 detecting 1 audioalarming 1 recording	(1) Fixed alarm at 4000 cps (2) Adjustable alarm per power level	Detect/alarm/record release of gaseous radioactive effluents in the reactor vent duct to the environs

*Air Particulate Detector

4.0 SURVEILLANCE REQUIREMENTS

Surveillance requirements relate to testing, calibration, or inspection to ensure that the necessary quality of systems and components is maintained; that facility operation will be within safety limits; and that the limiting conditions for operation will be met. Tests not performed within the specified frequency because of physical or administrative limitations including equipment failure and maintenance activities shall be performed before resuming normal operations.

General: Surveillance Pertaining to Safety Limits and Limiting Safety System Settings.

Specifications:

(1) Whenever an unscheduled shutdown occurs, an evaluation shall be conducted to determine whether a safety limit was exceeded.

(2) Safety system operability tests shall be performed in accordance with Table 3-2.

4.1 Reactor Core Parameters Surveillance

Applicability: These specifications apply to the surveillance activities required for reactor core parameters.

Objective: To specify the frequency and type of testing to assure that reactor core parameters conform to specifications of Section 3.1 of these Technical Specifications.

Specifications:

(1) The reactivity worth and reactivity insertion rate of each control blade, the shutdown margin and excess reactivity shall be measured annually (at intervals not to exceed 15 months) or whenever physical or operational changes create a condition requiring reevaluation of core physics parameters.

(2) The temperature coefficient of reactivity shall be measured annually at intervals not to exceed 15 months.

(3) The void coefficient of reactivity shall be checked biennially to ensure that it is negative, at intervals not to exceed 30 months.

Bases: The measurements specified are sufficient to provide assurance that the reactor core parameters are maintained within the limits specified in Section 3.1.

4.2 Reactor Control and Safety System Surveillance

Applicability: These specifications apply to the surveillance activities required for the reactor control and safety systems.

Objective: To specify the frequency and type of testing or calibration to assure that reactor control and safety system operating parameters conform to specifications of Section 3.2 of these Technical Specifications.

Specifications:

(1) Control blade drop times, from the fully withdrawn position, shall be measured semiannually at intervals not to exceed 8 months. If maintenance is performed on a blade, the drive mechanism, or associated electronics, the blade-drop time shall be measured before the system is considered operable.

(2) The control blade full withdrawal and controlled insertion times shall be measured semiannually at intervals not to exceed 8 months.

(3) Tests, limits, and frequencies of tests for the control blade withdrawal inhibit interlocks operability tests shall be performed as listed in Table 4-1.

(4) The mechanical integrity of the control blades and drive system shall be inspected during each incore inspection but shall be fully checked at least once every 5 years at intervals not to exceed 6 years.

(5) Following maintenance or modification to the control blade system, an operability test and calibration of the affected portion of the system, including verification of control blade drive speed, shall be performed before the system is to be considered operable.

(6) The reactor shall not be started unless (a) the weekly checkout has been satisfactorily completed within 7 days prior to startup, (b) a daily checkout is satisfactorily completed within 8 hr prior to startup, and (c) no known condition exists that would prevent successful completion of a weekly or daily check.

(7) The limitations established under Paragraph 4.2.(6)(a) and (b) can be deleted if a reactor startup is made within 6 hr of a normal reactor shutdown on any one calendar day.

(8) The following channels shall be calibrated annually, at intervals not to exceed 15 months, and any time a significant change in channel performance is noted:

(a) log N - period channel
(b) power level safety channels (2)

(c) linear power level channel
(d) primary coolant flow measuring system
(e) primary coolant temperature measuring system

(9) Following maintenance or modification to the reactor safety system, a channel test and calibration of the affected channel shall be performed before the reactor safety system is considered operable.

Bases: The frequency and type of test or calibration are defined based on operating experience and/or in accordance with ANSI/ANS- 15.1-1990 to assure proper functioning of the systems and equipment that comprise the reactor control and safety systems.

4.3 Coolant Systems

Applicability: These specifications apply to the surveillance activities required for the reactor coolant system.

Objective: To specify the frequency and type of testing or calibration to assure the reactor coolant system conforms to the specifications presented in Section 3.3 of these Technical Specifications

(1) The primary water resistivity shall be determined as follows:

(a) Primary water resistivity shall be measured during the weekly checkout by a portable conductivity meter using approved procedures. The measured value shall be larger than 0.4 megohm-cm.

(b) Primary water resistivity shall be measured during the daily checkout at both the inlet and outlet of the demineralizers (DM). The measured value, determined by an online conductivity meter annunciating in the control room, shall be larger than 0.5 megohm-cm at the outlet of the DM.

(2) Primary water shall be sampled and evaporatively concentrated, and the gross radioactivity of the residue shall be measured with an adequate measuring channel. This specification procedure shall prevail

(a) during the weekly checkout,

(b) upon the appearance of any unusual radioactivity in the primary water or the primary water demineralizers, and

(c) before the release of any primary water from the site.

(3) The primary water radioactivity shall be measured during the weekly checkout for gross $\beta - \gamma$ and gross α activity.

(a) The measured α activity shall not exceed 50 dpm above background level.

(b) The measured $\beta - \gamma$ activity shall not exceed 25% above mean normal activity level.

(4) The secondary water system shall be tested for radioactive contamination during the weekly checkout according to written procedures.

Bases: These specifications assure that necessary limits are maintained on fission products and other activated materials in primary and secondary coolant samples to provide assurance that the facility is operating in a safe and effective manner. The frequency and type of monitoring is based on operating experience.

4.4 Reactor Vent System Surveillance

Applicability: These specifications apply to the surveillance requirements for the reactor vent system.

Objective: To specify the frequency and type of testing to assure the reactor vent system conforms to the specifications presented in Section 3.4 of these Technical Specifications.

Specifications:

(1) The reactor vent system flow rates shall be measured annually at intervals not to exceed 15 months, as follows:

(a) reactor cavity exhaust duct flow (1 cfm < flow rate < 400 cfm);
(b) stack flow rate > 10,000 cfm.

(2) The following interlocks shall be tested as part of the weekly checkout:

(a) core vent system damper closed if diluting fan is not operating;
(b) reactor vent system shut off when the evacuation alarm is actuated.

Bases: These specifications assure the reactor vent system is operating as specified. The frequency and type of monitoring is based on operating experience and ANSI/ANS-15.1-1990.

4.5 Radiation Monitoring Systems and Radioactive Effluents Surveillance

Applicability: These specifications apply to the surveillance activities required for the radiation monitoring system and effluents released from the facility.

Objective: To specify frequency and type of testing to assure that the radiation monitoring system and effluent releases conform to the specifications of Section 3.5 of these Technical Specifications.

Specifications:

(1) The area radiation monitor channels, the stack monitor, and the air particulate monitor shall be verified to be operable before each reactor startup as required by the daily checkout. Calibration of radiation monitoring channels shall be performed quarterly at intervals not to exceed 4 months. Note: Portable radiation survey meters are not normally considered radiation monitoring channels, so there is no need for them to be calibrated quarterly.

(2) The Ar-41 concentration in the stack effluent shall be measured semiannually at intervals not to exceed 8 months.

(3) Releases of liquid effluents from the aboveground waste water holdup tank shall be sampled and the radioactivity measured before release to the sanitary sewage system which is allowed in conformance with 10 CFR 20 regulations.

(4) The reactor shall be placed in a reactor shutdown condition whenever Specification 4.5 (1) is not met.

(5) The reactor vent system shall be immediately secured upon detection of failure of the stack monitoring system.

Basis: Specification (1) assures the monitors are operable. Specification (2) provides the basis for limiting energy generation to assure Ar-41 releases are in accordance with 10 CFR 20, Appendix B, Table 2. Specification (3) ensures compliance with 10 CFR 20 for liquid releases from the site. Specifications (4) and (5) ensure that all releases of radioactivity will be controlled and monitored.

4.6 Surveillance of Experimental Limits

Applicability: This specification applies to the surveillance requirements for experiments installed in the UFTR core.

Objective: To prevent the conduct of experiments or irradiations which could damage the reactor or release an excessive amount of radioactivity.

Specifications:

(1) Surveillance to ensure that experiments meet the requirements of Section 3.6 shall be conducted before inserting each experiment into the reactor.

(2) The reactivity worth of an experiment shall be determined at approximately 1 W power level or as appropriate within limiting conditions for operation, before continuing reactor operation with said experiment.

Basis: Measurements of the reactivity worth of an experiment shall verify that the experiment is within the authorized reactivity limits.

4.7 Reactor Building Evacuation Alarm Surveillance

Applicability: These specifications apply to the surveillance requirements for the reactor building evacuation alarm.

Objectives: To assure that building alarm actuation, building occupants and reactor staff are responding as expected.

(1) The automatic actuation of the building evacuation alarm in coincidence with actuation of the high level alarm on two area monitors and the manual actuation of the evacuation alarm shall be tested as part of the weekly checkout.

(2) The automatic shutoff of the air handling system and the reactor vent system in coincidence with the building evacuation alarm shall be tested as part of the weekly checkout.

(3) Evacuation drills for facility personnel shall be conducted semiannually at intervals not to exceed 8 months.

Basis: Specification (1) ensures that the actuation of the building evacuation alarm is operable to alert occupants to the need to evacuate. Specification (2) ensures that the system responds correctly to a known input to assure isolation of the cell atmosphere upon actuation of the evacuation alarm. Specification (3) ensures that facility personnel are familiar with emergency response procedures.

4.8 Surveillance Pertaining to Fuel

Applicability: These specifications apply to fuel installed in the core.

Objective: To verify integrity of the fuel

Specifications:

(1) The incore reactor fuel elements shall be inspected every five years at intervals not to exceed 6 years, in a randomly chosen pattern, as deemed necessary. At least 4 elements will be inspected.

(2) Fuel-handling tools and procedures shall be reviewed for adequacy before fuel handling operations. The assignment of responsibilities and training of the fuel-handling crew shall be performed according to written procedures.

Bases: Specification (1) ensures the integrity of the fuel and Specification (2) assures that reactor staff is properly qualified to perform fuel handling.

Table 4-1 Control Blade Withdrawal Inhibit Interlocks Operability Tests

Inhibit	Limit	Frequency
Reactor Period	≤10 sec	Daily Checkout
Safety Channels and Wide Range Drawer not in OPERATE position	-	Daily Checkout
Multiple blade withdrawal	Any 2 or more blades simultaneously in Manual	Daily Checkout
Source count rate	< 2 cps	Verification only when count rate < 2cps during daily checkout

5.0 DESIGN FEATURES

Design features are specified to ensure that items important to safety are not changed without appropriate review. The items of concern are design features and parameters that were considered as limiting values (or significant for the protection of the reactor personnel and the general public) for the purpose of establishing safety limits, limiting safety system settings, or limiting conditions for operation.

5.1 Site and Facility Description.

The UFTR is located on the University of Florida campus, at Gainesville, Florida, in the immediate vicinity of the buildings housing the College of Engineering and the College of Journalism. The Nuclear Science Center, which houses the Department of Nuclear and Radiological Engineering, is annexed to the reactor building.

The reactor shall be housed in a reinforced concrete cell in the reactor building. The reactor building is a "vault-type" building as defined in 10 CFR 73.2(o). The reactor building is divided into two distinct parts based upon the difference in utilization and their structure. The overall reactor building measures approximately 60 ft by 80 ft inside. The reactor cell area is 30 ft by 60 ft with 29 ft of head room, located at the north end of the building. The rest of the building is used for research and instructional laboratories, faculty offices, and graduate study areas.

The reactor cell shall have an independent ventilation and air-conditioning system. The reactor vent effluents shall be discharged through the reactor stack, some 30 ft above ground level.

All gases that may cause a hazard through neutron activation shall be exhausted from the reactor cell, reactor cavity, experiments or experimental facilities installed in or adjacent to the core or surrounding graphite and discharged to the environment through the reactor vent system and appropriately monitored for radioactivity, as specified under Chapter 3 of these Technical Specifications.

The 3-ton bridge crane shall not be used during reactor operation in a manner that could damage the control system and prevent it from performing its intended function. No load above 500 lb shall be lifted over the control blade drive units unless the control blades are fully inserted. The crane shall be operated during reactor operations only by a licensed reactor operator.

The following doors penetrate the reactor cell: (1) an exit chamber passageway from the cell to the UFTR building lower hallway, (2) a door from the control room to the UFTR building lower hallway, and (3) a freight door (10 ft x 12 ft) leading to the environs. A panel in the freight door serves as an emergency personnel exit from the reactor cell. The freight door and panel shall be locked to prevent entrance during reactor operation. The

freight door and panel shall not be used for general access to or egress from the reactor cell. This is not meant to preclude use of these doors in connection with authorized activities when the reactor is not in operation.

5.2 Cooling Systems

5.2.1 Primary Cooling System

The primary coolant is demineralized light water, which is normally circulated in a closed loop. The flow is from the 200-gal storage (dump) tank to the primary coolant pump; water is then pumped through the primary side of the heat exchanger and to the bottom of the fuel boxes, upward past the fuel plates to overflow pipes located about 6 in. above the fuel, and into a header for return to the storage tank. A purification loop is used to maintain primary water quality. The purification loop pump circulates about 1 gpm of primary water, drawn from the discharge side of the heat exchanger, through mixed-bed ion-exchange resins and a ceramic filter. The purification loop pump automatically shuts off when the primary coolant pump is operating, since flow through the purification system is maintained. Primary coolant may be dumped from the reactor fuel boxes by opening an electrically operated solenoid dump valve, which routes the water to the dump tank. A pressure surge of about 2 psi above normal in the system also will result in a water dump by breaking a graphite rupture disc in the dump line. This drains the water to the primary equipment pit floor actuating an alarm in the control room. The primary coolant system is instrumented as follows:

(1) thermocouples at each fuel box and the main inlet and outlet (eight total), alarming and recording in the control room; six are required (main inlet and outlet plus four on fuel boxes);

(2) a flow sensing device in main inlet line, alarming and displayed in the control room;

(3) a flow sensing device (no flow condition) in the outlet line, alarming in the control room;

(4) resistivity probes monitoring the inlet and outlet reactor coolant flow, alarming and displayed in the control room;

(5) an equipment pit water level monitor, alarming in the control room.

The reactor power is calibrated annually by the use of the coolant flow and temperature measuring channels.

5.2.2 Secondary Cooling System

Two secondary cooling systems are normally operable in the UFTR: a well water secondary cooling system and a city water secondary cooling system. Either system meets the requirements for secondary cooling. The well secondary cooling system is the main system used for removal of reactor generated heat to the environment. A deep well furnishes about 160 gpm of cooling water to the shell side of the heat exchanger, removing primary heat and rejecting it to the storm sewer. Weekly samples monitor the activity of this water. Flow indications in the control room are 140 gpm as a warning and 60 gpm to initiate a trip at or above 1 kW after an approximately 10-sec warning. The city water secondary cooling system can be used for backup cooling or for specific operations requiring reactor coolant temperatures hotter than those obtained with the well cooling system. Operability of this city water system is not a limiting condition for operation unless it is to be used for reactor operation at or above 1 kW. The secondary flow by the city water system is about 30 - 70 gpm, with a reactor trip set at 8 gpm or higher (as measured by a flow switch) for power levels at or above 1 kW with approximately a 10 sec delay only upon first reaching 1 kW. A back flow preventer in the city water line ensures compliance with the requirements of the National Plumbing Code to prevent contamination of the potable water supply. The secondary coolant system inlet and outlet temperatures are monitored by thermocouples, with monitoring, recording and alarm functions in the control room.

5.3 Reactor Core and Fuel

5.3.1 Reactor Fuel

Fuel elements shall be of the general MTR type, with thin fuel plates clad with aluminum and containing uranium fuel enriched to no more than about 93% U-235. The fuel matrix may be fabricated by alloying high purity aluminum-uranium alloy or by the powder metallurgy method where the starting ingredients (uranium-aluminum) are in fine powder form. The fuel matrix also may be fabricated from uranium oxide-aluminum (U_3O_8-Al) using the powder metallurgy process. There shall be nominally 14.5 g of U-235 per fuel plate.

The UFTR facility license authorizes the receipt, possession, and use of:

(1) up to 4.82 kg of contained uranium-235;
(2) a 1-Ci sealed plutonium-beryllium neutron source;
(3) an up-to-25-Ci antimony-beryllium neutron source.

Other neutron and gamma sources may be used if their use does not constitute an unreviewed safety question pursuant to 10 CFR 50.59 and if the sources meet the criteria established by the Technical Specifications.

5.3.2 Reactor Core

The core shall contain up to 24 fuel assemblies of 11 plates each. Up to six of these assemblies may be replaced with pairs of partial assemblies. Each partial assembly shall be composed of either all dummy or all fueled plates. A full assembly shall be replaced with no fewer than ten plates in a pair of partial assemblies.

Fuel elements shall conform to nominal specifications presented in Table 5-1.

The reactor core shall be loaded so that all fuel assembly positions are occupied.

The fuel assemblies are contained in six aluminum boxes arranged in two parallel rows of three boxes each, separated by about 30 cm of graphite. The fuel boxes are surrounded by a 5 ft x 5 ft x 5 ft reactor grade graphite assembly.

The tops of the fuel boxes are covered during operations at power above 1 kW, by the use of the shield plugs and/or gasketed aluminum covers secured to the top of the fuel boxes. The devices function to prevent physical damage of the fuel, to minimize evaporation / leakage of water from the top of the fuel boxes, and to minimize entrapment of argon in the coolant water for radiological protection purposes.

5.4 Fuel Storage

5.4.1 New Fuel

Unirradiated new fuel elements are stored in a vault-type room security area equipped with intrusion alarms in accordance with the Physical Security Plan. Elements are stored in a steel, fireproof safe in which a cadmium plate separates each layer of bundles to ensure subcriticality under optimum conditions of moderation and reflection.

5.4.2 Irradiated Fuel

Irradiated fuel is stored upright and dry in storage pits within the reactor building in criticality-safe holes.

5.5 Reactor Control and Safety Systems

Design features of the components of the reactor control and safety systems that are important to safety, as specified under Section 3.2 of these Technical Specifications, are delineated in Sections 5.5.1 and 5.5.2.

5.5.1 Reactor Control System

Reactivity control of the UFTR is provided by four control blades, three safety blades and one regulating blade. The control blades are of the swing-arm type consisting of four aluminum vanes tipped with cadmium, protected by magnesium shrouds. They operate in a vertical arc within the spaces between the fuel boxes. Blade motion is limited to a removal time of at least 100 seconds and the insertion time under trip conditions is stipulated to be less than 1.5 sec. The reactor blade withdrawal interlock system prevents blade motion which will exceed the reactivity addition rate of 0.06% $\Delta k/k$ per sec, as specified in these Technical Specifications. The control blade drive system consists of a two-phase fractional horsepower motor that operates through a reduction gear train, and an electrically energized magnetic clutch that transmits a motor torque through the control blade shaft, allowing motion of the control blades. The blades are sustained in a raised position by means of this motor, acting through the electromagnetic clutch. Interruption of the magnetic current results in a decoupling of the motor drive from the blade drive shaft, causing the blades to fall back into the core. Position indicators, mechanically and electronically geared to the blade drives, transmit blade position information to the operator control console. Reactor shutdown also can be accomplished by voiding the moderator/coolant from the core. Two independent means of voiding the moderator/coolant from the core are provided:

(1) water dump via the primary coolant system dump valve opening under full trip conditions.

(2) water dump via the rupture disk breaking under pressure conditions above design value.

The integral worths of the individual safety blades vary from about 1.3 to 2.3% $\Delta k/k$ depending on position in the core and individual characteristics. The regulating blade worth is about 0.8% to 1.0% $\Delta k/k$. The blade worths, drive speeds, and drop-time values are sufficiently conservative to ensure compliance with the specified reactivity limitations. Additional reactivity and power related features are obtained from the control blade withdrawal inhibits. The regulating blade may be engaged by a servo-mechanism controlled by the linear channel for automatic reactor power control.

5.5.2 Reactor Safety System

(1) Power Level Channels

Two independent measuring channels are provided for power level limits; both are required for the reactor to be operable. Each channel covers reliably the range from about 1 to 150% of full power (of 100 kW). One channel (Safety 1) is part of the wide range drawer, and receives its main signal from a fission chamber. The

Safety 2 channel uses an uncompensated ion chamber for neutron detection. Each channel drops all control blades and the moderator coolant from the core by actuating bistable trips in the safety system in a one-out-of-one trip logic. Visual indication of the power measured by each chamber, as well as annunciator of channel status is available to the operator in the control room.

(2) Wide Range Logarithmic Power Level and Period Channel

The logarithmic power channel covers the wide range from reactor startup to full power in 10 decades. It uses a fission chamber for this entire range and uses a B-10 proportional counter only in the startup (source) range. Signals from the fission chamber and the B-10 counter are amplified by a preamplifier before going to the log channel. The preamplifier also processes test signals from the console controls and deenergizes the B-10 proportional counter at about 400 cps. Power level information is displayed on a meter and on a two-pen recorder. The channel provides the following blade withdrawal inhibits or blade trips: minimum source count inhibit of 2 cps, fast period inhibit of 10 sec, fast period trip of 3 sec, and inhibit limiting power escalation in the automatic mode to no faster than 30 sec, and a trip at or above 1% power when secondary coolant flow is below the trip setting. Because this is a wide range channel, a separate startup channel is not used. These control or limiting actions prevent startup or operation of the reactor unless it is properly monitored or if operational restrictions are not met. Period is displayed on a meter and is effective for control over the entire range of operation.

(3) Startup (Neutron) Source(s)

A permanent, regenerable, antimony-beryllium source of up to 25 Ci and/or a removable plutonium-beryllium source of 1 Ci may be used for reactor startup to monitor the approach to criticality. The use of a neutron source ensures that behavior of the reactor is being monitored by the reactor instrumentation during subcritical control blade manipulations.

(4) Linear Neutron Channel and Automatic Flux Control System

The linear channel is required to be operable when the reactor is to be operated in the automatic mode. The linear channel uses a compensated ion chamber for neutron detection; its signal is transmitted by a multirange picoammeter. The picoammeter sends a signal to the linear channel of the two-pen recorder to display power level from source level to full power. It also sends a signal to the automatic flux controller which, in comparison with a signal from a percent of power setting control acts to establish and/or hold power level at a desired value. The rate of power increase is controlled by the action of a limiter in the linear channel/ automatic control system which maintains the reactor period at or slower than 30 sec. The automatic flux controller is not required to be operable for reactor operations where it is not needed and not to be used.

5.6 Radiological Safety Design Features

5.6.1 Physical Features

The confinement structure consists of the reactor cell, with a free air volume of about 1600 m^3. This structure houses the reactor, reactor control room, the primary cooling system (including the dump tank, heat exchanger and purification loop), secondary coolant piping, and reactor vent system. Access to the reactor cell, which is the designated restricted and security area, is controlled by the specifications established by the Physical Security Plan of the UFTR.* Ventilation is through the independent air handler/ventilation and reactor vent system. The reactor vent system can be secured to prevent uncontrolled discharge of radioactivity to the environment or releases in excess of permissible levels (per 10 CFR 20). Rough and absolute filters are used to eliminate or minimize radioactive air particulate contamination from the exhaust air. The electrically actuated damper in the core exhaust line is fail-safe and closes upon deenergization.

5.6.2 Monitoring System

Area and stacker radiation monitors are used for radioactivity monitoring, as delineated in Sections 3.5.1, 3.5.2, and 3.5.4 of these Technical Specifications. The cell air is monitored by an air particulate detector. Exhaust air drawn from the reactor cavity, reactor cell, or experiments is continuously monitored for gross concentration of radioactive gases and/or airborne radioactivity.

5.6.3 Evacuation Sequence

The emergency evacuation sequence is initiated either automatically by two area monitors alarming high in coincidence or manually by the console reactor operator. The sequence is that the reactor room air handler/ventilation system and the reactor vent system are shut down and the core vent damper is closed.

---

* Withheld from public disclosure pursuant to 10 CFR 2.790(d).

Table 5-1 Fuel Element Nominal Specifications

Item	Specification
Overall size (bundle)	2.845 in. x 2.50 in. x 25.625 in.
Clad thickness	0.015 in.
Plate thickness	0.070 in.
Water channel width	0.137 in.
Number of plates	standard fuel element - 11 fueled plates partial element - no fewer than 10 plates in a pair of partial assemblies
Plate attachment	bolted with spacers
Fuel content per plate	14.5g U-235 nominal

6.0 ADMINISTRATIVE CONTROLS

6.1 Organization

6.1.1 Structure

The organization for the management and operation of the reactor facility shall include the structure indicated in Figure 6.1. Job titles are shown for illustration and may vary. Four levels of authority are provided.

Level 1 - individuals responsible for the reactor facility's licenses, charter, and site administration.

Level 2 - individual responsible for reactor facility management.

Level 3 - individual responsible for reactor operations, and supervision of day-to-day facility activities.

Level 4 - reactor operating staff (Senior Reactor Operator, Reactor Operator and trainees).

The Reactor Safety Review Subcommittee is appointed by, and shall report to, the Chairman of the Radiation Control Committee. The Chairman of the Radiation Control Committee reports to the Director of Environmental Health and Safety, who reports to the Vice-President for Finance and Administartion. Radiation safety personnel shall report to Level 2 or higher.

6.1.2 Responsibility

Responsibility for the safe operation of the reactor facility shall be with the chain of command established in Figure 6.1. Individuals at various management levels, in addition to having responsibility for the policies and operation of the reactor facility, shall be responsible for safeguarding the public and facility personnel from undue radiation exposures and for adhering to all requirements of the operating license, charter, and technical specification. In all instances, responsibilities of one level may be assumed by designated alternates or by higher levels, conditional upon appropriate qualifications.

6.1.3 Staffing

The minimum staffing when the reactor is not secured shall be as follows:

(1) A certified reactor operator shall be in the control room.

(2) A second person shall be present at the facility complex able to carry out prescribed written instructions including instructions to initiate the first stages of the emergency plan, including evacuation and initial notification procedures. Unexpected absence for two hours is acceptable provided immediate action is taken to obtain a replacement.

(3) A designated Senior Reactor Operator (Class A Reactor Operator) shall be readily available on call. "Readily Available on Call" means an individual who:

(a) has been specifically designated and the designation known to the operator on duty,
(b) keeps the operator on duty informed of where he/she may be rapidly contacted and the phone number or other means of communication available, and
(c) is capable of getting to the reactor facility within a reasonable time under normal conditions (e.g., 30 min or within a 15 mi radius).

A list of reactor facility personnel by name and telephone number shall be readily available in the Control Room for use by the operator. The list shall include:

(1) management personnel,
(2) radiation safety personnel, and
(3) other operations personnel.

Events requiring the direction of a Senior Reactor Operator are

(1) all fuel or control-blade relocations within the reactor core region,

(2) relocation of any incore experiment with a reactivity worth greater than one dollar, and

(3) recovery from unplanned or unscheduled shutdowns (in this instance, documented verbal concurrence from the Senior Reactor Operator is required).

6.1.4 Selection and Training of Personnel

The selection, training, and requalification of operations personnel shall meet or exceed the requirements of the American National Standard for Selection and Training of Personnel for Research Reactors, ANSI/ANS-15.4-1988, Section 4.

6.2 Review and Audit

A method for the independent review and audit of the safety aspects of reactor facility operations shall be established to advise management. The review and audit functions of

the UFTR operations are conducted by the Reactor Safety Review Subcommittee (RSRS).

6.2.1 Composition and Qualifications

The RSRS shall be composed of a minimum of five members, including the Reactor Manager and Radiation Control Officer (both ex-officio voting members), the Chairman of the Nuclear and Radiological Engineering Department and two other members having expertise in reactor technology and/or radiological safety.

6.2.2 Charter and Rules

The review and audit functions shall be conducted in accordance with the following established charter:

Designation - The name of the Subcommittee is Reactor Safety Review Subcommittee (RSRS).

Accountability - The RSRS is a Subcommittee of and reports to the University Radiation Control Committee (URCC). The URCC provides radiological safety recommendations to the Director of Environmental Health and Safety.

Scope - The RSRS shall be responsible for the review of safety-related issues pertaining to the University of Florida Training Reactor (UFTR).

Purpose - The purpose of the RSRS is to ensure the safe operation of the UFTR through the discharge of the Subcommittee review and audit function.

Membership

(a) The RSRS shall consist of at least five members. Membership will include the Chairman of the Nuclear and Radiological Engineering Department, University Radiation Control Officer, Reactor Manager and two technical personnel familiar with the operation of reactors and with the design of the UFTR and radiological safety, at least one of whom is from outside the Department of Nuclear and Radiological Engineering. The two technical personnel will be recommended to the Chairman of the URCC by the Chairman of the Department of Nuclear and Radiological Engineering. Any member may designate a duly qualified representative from a standing URCC approved list to act in their absence.

(b) An Executive RSRS Committee will consist of the Reactor Manager, University Radiation Control Officer and Chairman of the RSRS.

(c) The Chairman of the RSRS will be appointed by the Chairman of the URCC. The Chairman of the RSRS is an ex-officio voting member of the URCC and will serve as liaison between the RSRS and the URCC.

(d) Members appointed to the RSRS shall be reviewed, and as appropriate, new appointments made by October 1 of each calendar year.

Meetings

(a) At least one meeting shall be held quarterly at intervals not to exceed 4 months. Meetings may be held more frequently as circumstances warrant, consistent with the effective monitoring of facility operations as determined by the RSRS Chairman.

(b) Review of draft minutes will be completed before subsequent meetings, at which time they will be submitted for approval. Responsibility to ensure that this is done falls upon the RSRS Chairman. The RSRS Chairman is charged with the responsibility to assure that the minutes are submitted for approval in a timely manner.

(c) A quorum shall consist of at least three members and at least three members must agree when voting, regardless of the number present.

6.2.3 Review Function

The following items shall be reviewed:

(a) determination that proposed changes in equipment, systems, tests, experiments, or procedures do not involve an unreviewed safety question;

(b) all new procedures and major revisions thereto having safety significance, proposed changes in reactor facility equipment or systems having safety significance;

(c) all new experiments or classes of experiments that could affect reactivity or result in the release of radioactivity;

(d) proposed changes in technical specifications, license, or charter;

(e) violations of technical specifications, license, or charter;

(f) violations of internal procedures or instructions having safety significance;

(g) operating abnormalities having safety significance;

(h) reportable occurrences;

(i) audit reports and annual facility reports.

A written report or minutes of the findings and recommendations of the review group shall be submitted to RSRS members in a timely manner after the review has been completed and to the Chairman of the Radiation Control Committee whenever a finding is deemed to require review by Level 1.

6.2.4 Audit Function

The audit function shall include selective (but comprehensive) examination of operating records, logs, and other documents. Where necessary, discussions with cognizant personnel shall take place. In no case shall the individual immediately responsible for the area, audit in the area. The following items shall be audited:

(a) facility operations for conformance to the technical specifications and applicable license or charter conditions, at least once per calendar year (interval between audits not to exceed 15 months).

(b) the requalification and recertification program for the operating staff, at least once every other calendar year (interval between audits not to exceed 30 months).

(c) the results of action taken to correct those deficiencies that may occur in the reactor facility equipment, systems, structures, or methods of operations that affect reactor safety, at least once per calendar year (interval between audits not to exceed 15 months).

(d) the reactor facility emergency plan, and implementing procedures at least once every other calendar year (interval between audits not to exceed 30 months).

Deficiencies uncovered that affect reactor safety shall immediately be reported to the Radiation Control Committee and the Dean of the College of Engineering. A written report of the findings of the audit shall be submitted to the Dean of the College of Engineering and the review and audit group members within three (3) months after the audit has been completed.

6.3 Radiation Safety

The Radiation Control Committee and the Radiation Control Officer shall be responsible for the implementation of the Radiation Control Program for the UFTR. The primary purpose of the program is to assure radiological safety for all University personnel and the surrounding community.

6.3.1 AS LOW AS IS REASONABLY ACHIEVABLE (ALARA) (10 CFR 20.1101(b))

The principal routine emission from the UFTR facility complex is argon-41 discharged by the reactor vent system. There is little biological uptake of argon-41 and exposure limits are based upon external, total body irradiation.

The concentration of argon-41 in the stack effluent is continuously monitored when the reactor is operating, and is normally less than 1×10^{-5} μCi/ml after several hours of full power operation. The annual release is related to the number of equivalent hours of 100 kW operation (kWth per year). Reactor operations are limited by prior agreement, and by these Technical Specifications, to limit argon-41 discharges to the maximum allowed concentration when averaged over a month and using the established atmospheric dilution factor of 200.

The offsite environmental radioactive surveillance program has proven that exposure to the general public from the reactor radioactive effluents consistently approaches the nondetectable level and certainly is always well below the 100 mrem/yr limit.

The ALARA program at the UFTR minimizes unnecessary production of radioactive effluents by selectivity of operations. The potential reduction of argon-41 releases is frequently reviewed, and was a major item of consideration during reviews to upgrade facility operations to 500 kWth. A reduction of the vent flow as well as the argon dissolving in the primary coolant has been proposed in the past, as well as the possibility of utilizing storage tanks.

Radioactive liquid effluents and personnel radioactive exposure are well within ALARA guidelines.

6.4 Procedures

The facility shall be operated and maintained in accordance with approved written procedures. All procedures and major revisions thereto shall be reviewed and approved by the Director of Nuclear Facilities before becoming effective.

The following types of written procedures shall be maintained:

(1) normal startup, operation and shutdown procedures for the reactor to include applicable checkoff lists and instructions;

(2) fuel loading, unloading, and movement within the reactor;

(3) procedures for handling irradiated and unirradiated fuel elements;

(4) routine maintenance of major components of systems that could have an effect on reactor safety;

(5) surveillance tests and calibrations required by the technical specifications or those that may have an effect on reactor safety;

(6) personnel radiation protection, consistent with applicable regulations;

(7) administrative controls for operations and maintenance and for the conduct of irradiations and experiments that could affect reactor safety or core reactivity;

(8) implementation of the Emergency Plan;

(9) procedures that delineate the operator action required in the event of specific malfunctions and emergencies;

(10) procedures for flooding conditions in the reactor facility, including guidance as to when the procedure is to be initiated and guidance on reactivity control.

Substantive changes to the above procedures shall be made effective only after documented review by the RSRS and approval by the facility director (Level 2) or designated alternates. Minor modifications to the original procedures which do not change their original intent may be made by the reactor manager (Level 3) or higher, but modifications must be approved by Level 2 or designated alternates within 14 days. Temporary deviations from the procedures may be made by a senior reactor operator, in order to deal with special or unusual circumstances or conditions. Such deviations shall be documented and reported to Level 2 or designated alternates.

6.5 Experiment Review and Approval

(1) Experiment review and approval shall be conducted as specified under Section 3.6, "Limitations on Experiments", of these Technical Specifications.

(2) Experiment review and approval shall ensure compliance with the requirements of the license, Technical Specifications, and applicable regulations and shall be documented.

(3) Substantive changes to previously approved experiments with safety significance shall be made only after review by the RSRS, approval in writing by Level 2 or designated alternates. Minor changes that do not significantly alter the experiment may be approved by Level 3 or higher.

(4) Approved experiments shall be carried out in accordance with established approved procedures.

6.6 Required Actions

6.6.1 Action to be Taken in Case of Safety Limit Violation

(1) The reactor shall be shut down, and reactor operations shall not be resumed until authorized by the Nuclear Regulatory Commission.

(2) The safety limit violation shall be promptly reported to Level 2 or designated alternates.

(3) The safety limit violation shall be reported to the Nuclear Regulatory Commission.

(4) A safety limit violation report shall be prepared. The report shall describe the following:

(a) applicable circumstances leading to the violation including, when known, the cause and contributing factors;
(b) effect of the violation upon reactor facility components, systems, or structures and on the health and safety of personnel and the public;
(c) corrective action to be taken to prevent recurrence.

The report shall be reviewed by the RSRS and any followup report shall be submitted to the Commission when authorization is sought to resume operation of the reactor.

6.6.2 Action To Be Taken in the Event of an Occurrence of the Type Identified in Section 6.7.2(2) and 6.7.2(3)

(1) Reactor conditions shall be returned to normal or the reactor shall be shut down. If it is necessary to shut down the reactor to correct the occurrence, operations shall not be resumed unless authorized by Level 2 or designated alternates.

(2) Occurrence shall be reported to Level 2 or designated alternates and to the Commission as required.

(3) Occurrence shall be reviewed by the review group at their next scheduled meeting.

6.7 Reports

In addition to the requirements of the applicable regulations, reports shall be made to the Nuclear Regulatory Commission as follows:

6.7.1 Operating Reports

Routine annual reports covering the activities of the reactor facility during the previous calendar year shall be submitted to the Commission within nine (9) months following the end of each prescribed year. The prescribed year ends August 31 for the UFTR. Each annual operating report shall include the following information:

(1) a narrative summary of reactor operating experience including the energy produced by the reactor and the hours the reactor was critical;

(2) the unscheduled shutdowns including, where applicable, corrective actions taken to preclude recurrence;

(3) tabulation of major preventive and corrective maintenance operations having safety significance;

(4) tabulation of major changes in the reactor facility and procedures, and a tabulation of new tests or experiments, that are significantly different from those performed previously and are not described in the Safety Analysis Report, including conclusions that no unreviewed safety questions were involved;

(5) A summary of the nature and amount of radioactive effluents released or discharged to the environs beyond the effective control of the facility operators as determined at or before the point of such release or discharge. (The summary shall include to the extent practicable an estimate of individual radionuclides present in the effluent. If the estimated average release after dilution or diffusion is less than 25% of the concentration allowed, a statement to this effect is sufficient.);

(6) A summarized result of environmental surveys performed outside the facility;

(7) A summary of exposure received by facility personnel and visitors where such exposures are greater than 25% of that allowed.

The annual report shall be submitted with a cover letter to:

U.S. Nuclear Regulatory Commission
Attention: Document Control Desk
Washington, DC 20555

6.7.2 Special Reports

There shall be a report not later than the following working day by telephone and confirmed in writing by telegraph or similar conveyance to the Commission, to be followed by a written report that describes the circumstances of the event within 14 days of any of the following:

(1) Violation of safety limits (see Section 6.6.1);

(2) Release of radioactivity from the site above allowed limits (see Section 6.6.2);

(3) Any of the following: (see Section 6.6.2)

(a) Operation with actual safety-system settings for required systems less conservative than the limiting safety-system settings specified in the Technical Specifications;

(b) Operation in violation of limiting conditions for operation established in the Technical Specifications unless prompt remedial action is taken;

(c) A reactor safety system component malfunction that renders the reactor safety system incapable of performing its intended safety function, unless the malfunction or condition is discovered during maintenance test or periods of reactor shutdowns;*
*Note: Where components or systems are provided in addition to those required by the Technical Specifications, the failure of the extra components or systems is not considered reportable provided that the minimum number of components or systems specified or required perform their intended reactor safety function.

(d) An unanticipated or uncontrolled change in reactivity greater than one dollar (reactor trips resulting from a known cause are excluded);

(e) Abnormal and significant degradation in reactor fuel, or cladding, or both, coolant boundary, or confinement boundary (excluding minor leaks), where applicable, which could result in exceeding prescribed radiation exposure limits of personnel or environment or both;

(f) An observed inadequacy in the implementation of administrative or procedural controls such that the inadequacy causes or could have caused the existence or development of an unsafe condition with regard to reactor operations;

(g) A violation of the Technical Specifications or the facility license.

6.7.3 Other Special Reports

There shall be a written report sent to the Commission within 30 days of the following occurrences:

(1) permanent changes in the facility organization involving Level l (UF President, Dean of the College of Engineering, and Chairman of the Nuclear and Radiological Engineering Department), 2 or 3 personnel;

(2) significant changes in the transient or accident analyses as described in the UFTR Final Safety Analysis Report.

6.8 Records

Records of the following activities shall be maintained and retained for the periods specified below. The records may be in the form of logs, data sheets, computer storage media, or other suitable forms. The required information may be contained in single, or multiple records, or a combination thereof. Recorder charts showing operating parameters of the reactor (i.e., power level, temperature, etc,) for unscheduled shutdowns and significant unplanned transients including trips shall be maintained for a minimum period of 2 years.

6.8.1 Records To Be Retained for a Period of at Least Five Years

The following records are to be retained for a period of at least five (5) years:

(1) normal reactor facility operation (supporting documents such as checklists, log sheets, etc. shall be maintained for a period of at least 1 year);

(2) principal maintenance operations;

(3) reportable occurrences;

(4) surveillance activities required by the Technical Specifications;

(5) reactor facility radiation and contamination surveys where required by applicable regulations;

(6) experiments performed with the reactor;

(7) fuel inventories, receipts, and shipments;

(8) approved changes in operating procedures;

(9) records of meetings and audit reports of the RSRS.

6.8.2 Records To Be Retained for at Least One Training Cycle

Records of the most recent complete cycle of requalification and recertification training of certified operations personnel shall be maintained at all times the individual is employed.

6.8.3 Records To Be Retained for the Lifetime of the Reactor Facility

The following records are to be retained for the lifetime of the facility:

(1) gaseous and liquid radioactive effluents released to the environs;

(2) offsite environmental monitoring surveys required by the Technical Specifications;

(3) radiation exposure for all personnel monitored;

(4) updated drawings of the reactor facility.

Applicable annual reports, if they contain all of the required information, may be used as records in this section

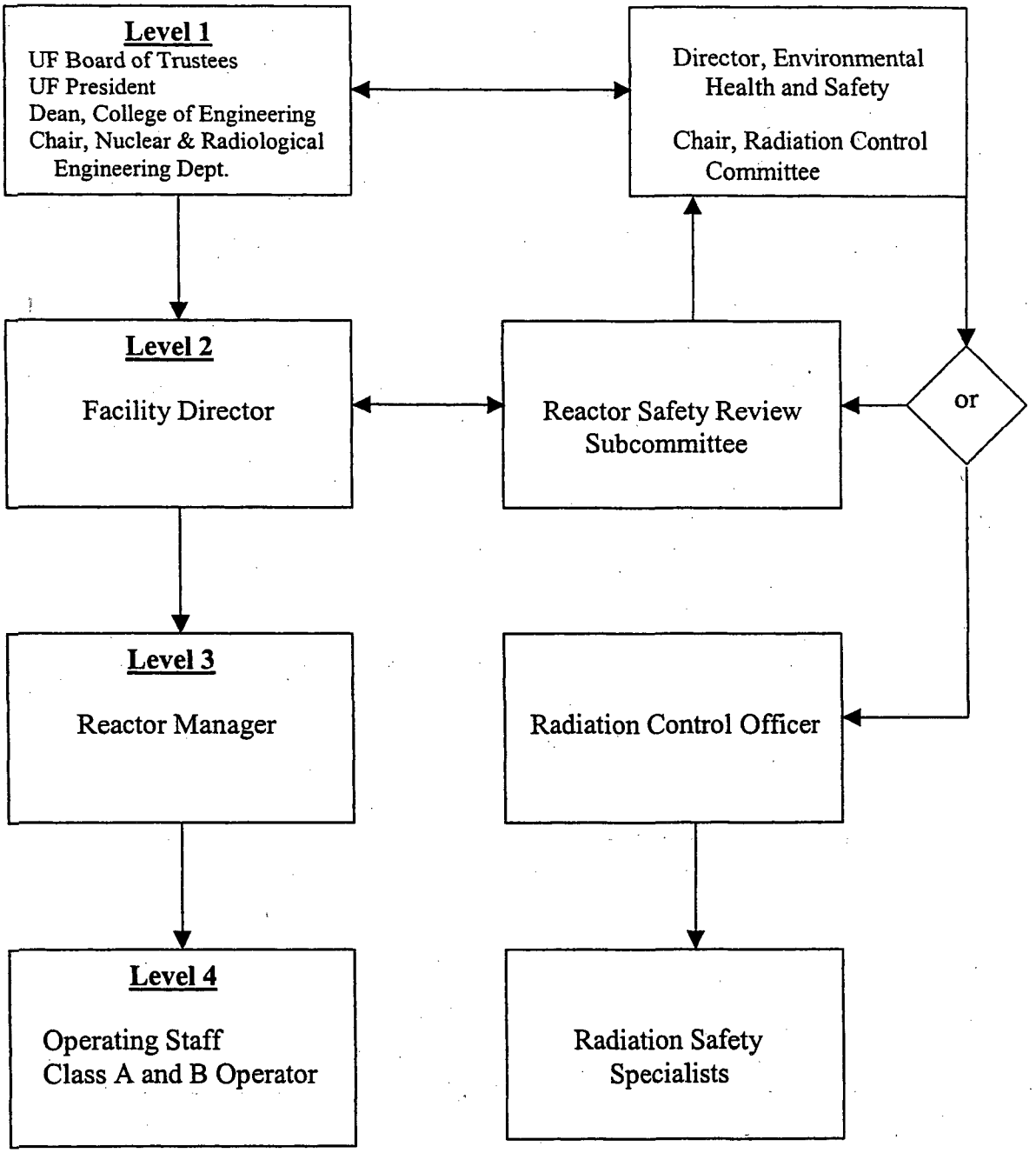

Figure 6-1 UFTR Organization Chart

CHAPTER 15

FINANCIAL QUALIFICATIONS

TABLE OF CONTENTS

INDEX OF TABLES

15 FINANCIAL QUALIFICATIONS

15.1 Financial Ability to Operate the UFTR

The UFTR has a long history of safe and effective operations as an already licensed nonpower reactor facility having been licensed originally in 1959 and relicensed in 1982. The facility is operated within the Nuclear and Radiological Engineering Department as a separately budgeted facility. In addition, the Nuclear and Radiological Engineering Department is one of about a dozen departments within the College of Engineering (COE).

Expenditures for the University of Florida College of Engineering for the past five years are shown below. These expenditures essentially constitute the budget for the respective budget years which run from July 1 to June 30. The expenditures are from all engineering sources including State funds, contracts and grants, overhead and auxiliary funds.

Budget Year	COE Expenditures (Budget)
1997–1998	$ 92,586,282
1998–1999	$102,437,179
1999–2000	$105,968,216
2000–2001	$133,693,769
2001–2002	$131,795,776

It is expected that the magnitude of the budget expenditures will generally trend upwards. Overall, however, the College of Engineering constitutes a large unit within the University of Florida that draws significant funding from a diverse set of resources, essentially assuring that there will be no large decreases even in difficult financial times such as occurred in 2001–2002.

As indicated above, the Nuclear and Radiological Engineering (NRE) Department is one department within the College of Engineering. The NRE Department is separately budgeted within the College and included in the NRE Department budget is the so-called reactor budget. This support is State funding. Other sources of reactor facility funding include a continuing U.S. Department of Energy (USDOE) "Reactor Sharing" grant as well as a USDOE "University Reactor Instrumentation" grant. For the previous five years, the amount of regular State funding as well as funding from these grant sources is summarized in Table 15-1. Where known for the next budget year beginning July 1, 2002, these values are also included in the table. When considered for the USDOE grants, the assignment to specific years is somewhat arbitrary since the grants begin and end on a different schedule from the State funding and are not necessarily limited to a single budget year; moreover, they do not always begin at the same time each year. Nevertheless, the representation in the table is a reasonable assignment for budget purposes, illustrating the size of the grants in those years.

Although not listed in Table 15-1, because it is not set yet, the State funding for the UFTR for 2002–2003 budget year is expected to be in the vicinity of $125,000. The State funding includes money for salaries and expenses but no large pieces of equipment. Items in this category are handled with occasional direct allocations, usually at the end of the budget year when money is available. Over the last five years, this category is estimated to have provided about $35,000 in special funding including most costs associated with the replacement of the underground wastewater holdup tanks with aboveground tanks inside and outside the reactor cell as well as a number of smaller pieces of equipment. This money may originate with the College of Engineering or within the NRE Department.

Concerning the regular State funding, column 1 values include insurance and first-line radiation control which is performed by trained UFTR staff members. Radiation control services for some quarterly surveys, radioactive material transfers, certain surveillances, waste shipments, survey meter calibration and other nonregular services are provided by the University of Florida Radiation Control and Radiological Services Department. Except for very infrequent waste shipment charges, which are passed to the College of Engineering and separately budgeted, these other services are not charged and are part of the University overhead services. In addition, most building services including heating, air conditioning, electricity, water and sanitary services, and housekeeping/cleaning activities outside the reactor cell restricted area are separately handled (with no budgetary involvement); most building maintenance is covered by the University Physical Plant Division and its personnel. This is how all the building lighting was replaced several years ago as part of the University building refurbishment programs. The same is true for the building roof replacement which occurred about six years ago. Therefore, the budget provided by the University is effectively considerably more than that listed in column 1 were the reactor facility an independent entity.

In addition, degree-seeking students sometimes work in some capacity at the facility for credit. Much of the updated safety analysis for UFTR relicensing was performed by such a student for an advanced degree with no monetary impact as the student was already supported for obtaining the advanced degree. Such support does not appear in the budget and is not tracked but it is and will continue to be a valuable resource and benefit from association with a large nuclear and radiological engineering department.

Finally, service work for which the reactor facility was paid separately has accounted for about $14,116 in billing over the past five years. This is not broken down by year in Table 15-1 because the few external service users are usually billed at large intervals so the assignment to specific years would be arbitrary. This makes the percentage of cost devoted to commercial activities less than 2%. One of these billings is actually $3,000 for research service for a researcher at another university. Several other smaller billings were also to support funded research. When considered for actual commercial business users, the percentage of cost obtained from such services is well below 1.5%.

These same and similar funding sources are expected to continue over the next five years as state support gradually increases. It is hoped to expand external service work somewhat to provide up to $10,000 per year and also to have more funded researchers use the facility as a number of projects are currently under consideration.

15.2 Financial Ability to Decommission the UFTR Facility

Decommissioning report information was originally supplied for the University of Florida modified Argonaut-type reactor (University of Florida Training Reactor – UFTR) in accordance with the requirements of 10 CFR 50.33 and 50.75 in July 1990. The estimated cost for the complete decommissioning of the UFTR modified Argonaut-type reactor facility was set at $2.02 million. This cost estimate was a conservative value based upon consideration of the detailed cost estimate provided by the University of Washington in their decommissioning plan for a similar 100 kW Argonaut-type reactor facility. Our cost estimate assumed most work for the decommissioning would be performed by contractors as was the assumption by the University of Washington for their facility; however, our cost estimate also included a site-specific cost estimate (lower than the Washington case) for asbestos removal from the UFTR facility as well as certain other survey activities to be performed in house at lower cost. These conditions resulted in a somewhat lower estimated decommissioning cost than the comparable facility at the University of Washington but this cost estimate was still considered to be conservative.

The cost estimate for decommissioning the UFTR reactor facility for years 1991 and beyond has been adjusted for inflation by the consumer price index and the new estimate kept on file at the facility since 1990 to meet the requirements of 10 CFR 50.33 and 50.75. As a result, the cost estimate on file for decommissioning the UFTR reactor facility is currently adjusted upward from $2.02 million to $2.768 million as the current cost estimate which will be updated again in August 2002.

As noted in the above paragraph, the updated estimated cost to decommission the University of Florida Training Reactor (R-56 License) reactor facility for full unrestricted use as of the most recent updating is $2.768 million which is based on the annual update of the original estimate following the consumer price index. This updating method will be continued. The University of Florida is a state institution and thus, according to the provisions of 10 CFR 50.75(e)(2)(iv), the funds needed for decommissioning will be obtained when necessary. A letter attesting to this fact is contained in Appendix 15A. As the officials responsible for the letter, the Dean of the College of Engineering and the Chairman of the Nuclear and Radiological Engineering Department will be updated on an annual basis whenever the estimated cost of decommissioning the facility for unrestricted use has changed.

Table 15-1 UFTR Budget for Past Five Years

Budget Year	State (COE/NRE)	USDOE Grant "Reactor Sharing"	USDOE Grant "Univ Rx Instrum"	TOTAL
1997–1998	$109,756	$22,000	—	$131,756
1998–1999	$112,318	$32,000	$62,400	$206,718
1999–2000	$113,294	$47,000	$15,330	$175,624
2000–2001	$114,940	$40,000	$25,225	$180,165
2001–2002	$118,212	$42,000	$54,556	$214,768
2002–2003	$ na*	$38,000	$30,322	$ na*

*Not available at time of publication.

APPENDIX 15A

DECOMMISSIONING COMMITMENT LETTER

UNIVERSITY OF FLORIDA

College of Engineering
Department of Nuclear and Radiological Engineering

202 Nuclear Sciences Center
P.O. Box 118300
Gainesville, Florida 32611-8300
Tel: (352) 392-1401
Fax: (352) 392-3380
www.nuceng.ufl.edu

July 18, 2002

Attn: Document Control Desk
U.S. Nuclear Regulatory Commission
Washington, DC 20555

UFTR License Renewal
Decommissioning Commitment

University of Florida Training Reactor
Facility License R-56, Docket No. 50-83

The updated estimated cost to decommission the University of Florida Training Reactor (R-56 License) facility for full unrestricted use as of the most recent updating is $2,768,000 which is based on the annual update of the original estimate following the consumer price index. This updating method will be continued.

The University of Florida is a state institution and thus, according to the provisions of 10 CFR 50.75(e)(2)(iv), the funds needed for decommissioning will be obtained when necessary.

Sincerely yours,

William G. Vernetson
Associate Engineer and
Director of Nuclear Facilities

Alireza Haghighat
Chairman, Department of Nuclear
and Radiological Engineering

APPROVED

Pramod P. Khargonekar
Dean, College of Engineering

Signed before me this 18 day of July 2002.

Notary Public

Terri L. Anderson
MY COMMISSION # CC941436 EXPIRES
June 1, 2004
BONDED THRU TROY FAIN INSURANCE, INC.

CHAPTER 16

OTHER LICENSE CONSIDERATIONS

Table of Contents

16 Other License Considerations

16.1 Prior Use of Reactor Components

The University of Florida Training Reactor has been operating since 1959. Since the startup of the reactor, modifications were implemented to replace electronic and mechanical components with equivalent components, to overhaul systems, to meet new requirements or to improve the installation. These modifications were subjected to 10 CFR 50.59 evaluations and then determinations (as necessary) to assure that no unreviewed safety questions were involved as discussed in Chapter 1, Section 1.7.

Two items of major concern due to prior use are the fuel (cladding) and the reactivity control systems. Integrity of the fuel cladding is verified through the constant monitoring of primary coolant resistivity and the five-year core inspection. Low creep strength of the aluminum makes it unsuitable as structural material at temperatures above 572°F [1]; therefore, the UFTR safety limit continues to restrict fuel temperatures to remain below 200°F, assuring a continuing large margin to the temperature at which creep occurs in aluminum.

The reactivity control systems are routinely inspected and maintained according to UFTR Standard Operating Procedures. Inspection of the mechanical integrity of the control blade and drive systems is performed as a five-year surveillance inspection.

Due to the Quality Assurance Program any level of deterioration in any of the systems having nuclear safety related functions will be detected before it would cause any decrease in their safety functions. The UFTR Quality Assurance Program controls:

- All replacements, modifications, or changes to systems having a nuclear safety-related function;
- Material procurement, material maintenance, and material use of systems having a nuclear safety related function; and
- Documentation and control of tests and procedures for systems having nuclear safety related function.

Routine preventive maintenance or surveillances conducted in accordance with approved procedures are considered routine reactor operations.

References:

1. Glasstone, S. and A. Sesonske, *Nuclear Reactor Engineering - Reactor Design Basics*. 4th ed. Vol. 1. 1994: Chapman & Hall