CHAPTER 8.0 - ELECTRIC POWER

TABLE OF CONTENTS

8.1	INTRODUCTION	8.1-1
8.1.1	Offsite Power Systems - Summary Description	8.1-2
8.1.2	Onsite Power Systems - Summary Description	8.1-3
8.1.2.1	Unit Auxiliary Power System	8.1-4
8.1.2.2	Unit Class 1E A-C Power System	8.1-4
8.1.2.3	Unit Reactor Protection System (RPS) Power System	8.1-5
8.1.2.4	Unit Class 1E D-C Power System	8.1-6
8.1.2.5	Unit Non-Class 1E D-C Power System	8.1-6
8.1.3	Identification of Class 1E Loads	8.1-7
8.2	OFFSITE POWER SYSTEM	8.2-1
8.2.1	Description	8.2-1
8.2.1.1	Transmission Lines	8.2-1
8.2.1.2	Power Sources	8.2-1
8.2.1.3	Transmission System	8.2-2
8.2.2	Analysis	8.2-3
8.2.3	Adequacy of Offsite Power Distribution System	8.2-5
8.2.3.1	Introduction	8.2-5
8.2.3.2	Adequacy of Offsite Power	8.2-5
8.2.3.2.1	Loading Analysis	8.2-5
8.2.3.2.2	Criteria for Acceptable Voltage	8.2-6
8.2.3.2.3	System Performance	8.2-6
8.2.3.3	Undervoltage Relays	8.2-7
8.2.3.4	Conclusion	8.2-8
8.2.4	References	8.2-9
8.3	ONSITE POWER SYSTEMS	8.3-1
8.3.1	A-C Power Systems	8.3-1
8.3.1.1	Description	8.3-1
8.3.1.1.1	Unit Non-Class 1E Auxiliary Power Systems	8.3-1
8.3.1.1.2	Unit Class 1E A-C Power System	8.3-3
8.3.1.1.3	Unit Reactor Protection System (RPS) Power System	8.3-11

Table of Contents (Cont'd)

		PAGE
8.3.1.1.4	Instrument Power System	8.3-13
8.3.1.2	Analysis	8.3-14
8.3.1.3	Physical Identification of Safety-Related Equipment	8.3-17
8.3.1.3.1	General	8.3-17
8.3.1.3.2	Raceway Identification	8.3-17
8.3.1.3.3	Cable Identification	8.3-18
8.3.1.4	Physical Independence of Redundant Systems	8.3-18
8.3.1.4.1	General Criteria	8.3-18
8.3.1.4.2	Physical Separation Criteria	8.3-18
8.3.1.4.2.1	Raceway Separation Criteria	8.3-20
8.3.1.4.2.2	Cable Routing Criteria	8.3-21
8.3.1.4.2.3	Panel Criteria	8.3-27
8.3.1.4.2.4	Containment Electrical Penetration Criteria	8.3-28
8.3.1.4.3	Cable Tray Criteria	8.3-28
8.3.1.4.4	Cable Criteria	8.3-29
8.3.1.4.5	Control Procedures - Independence	8.3-30
8.3.1.4.6	General Arrangement of Class 1E Components	8.3-32
8.3.1.5	References	8.3-33
8.3.2	D-C Power Systems	8.3-33
8.3.2.1	Description	8.3-33
8.3.2.1.1	Unit Class 1E D-C Power System	8.3-33
8.3.2.2	Analysis	8.3-43
8.3.3	Fire Protection for Cable Systems	8.3-43
8.3.3.1	Cable Derating and Cable Tray Fill	8.3-43
8.3.3.2	Fire Detection and Protection in the Areas Where Cables are Installed	8.3-45
8.3.3.3	Fire Barriers and Separation Between Redundant Cable Trays	8.3-47
8.3.3.4	Fire Stops	8.3-47
8.3.3.5	Integrity of the Essential (ESF) Electrical Auxiliary Power and Controls	8.3-47
8.3.3.6	Provisions for Protection of ESF Auxiliary Power from Effects of Fire-Suppressing Agents	8.3-48
8.4	Other Electrical Features and Requirements for Safety	8.4-1
8.4.1	Containment Electrical Penetrations	8.4-1

CHAPTER 8.0 - ELECTRIC POWER

LIST OF TABLES

NUMBER	TITLE
8.1-1	Assignment of Safety/Related Systems to Electrical Divisions for Separation
8.1-2	Non-Safety-Related Equipment Fed from Class 1E Power Supplies
8.1-3	List of Nuclear Safety Electrical Design Criteria
8.1-4	Buses Supplied by Unit and System Auxiliary Transformers
8.1-5	4160-Volt ESF Buses for Units 1 and 2
8.1-6	List of 480-Volt ESF Auxiliary Power Transformers for Units 1 and 2
8.1-7	Equipment Supplied by 4160-Volt ESF Buses - Unit 1
8.1-8	Equipment Supplied by 4160-Volt ESF Buses - Unit 2
8.1-9	Equipment Supplied by 480-Volt ESF Substation Buses - Unit 1
8.1-10	Equipment Supplied by 480-Volt ESF Substation Buses - Unit 2
8.2-1	Bus Loadings Assumed for Offsite Power Supply Analyses
8.2-2	No-Load Voltages
8.2-3	Running Voltages at Selected Loads
8.3-1	Loading on 4160-Volt ESF Buses
8.3-2	Summary of Relay Protection for ESF 4160-Volt Equipment
8.3-3	Diesel-Generator Ratings
8.3-4	Tabulation of Diesel-Generator Protective and Supervisory Functions
8.3-5	Cable Tray Segregation Codes
8.3-6	Cable Segregation Codes (Non-RPS Cables)
8.3-7	Cable Ampacities - 8-kV Cables
8.3-8	Cable Ampacities - 5-kV Cables

LIST OF TABLES (Cont'd)

NUMBER	TITLE
8.3-9	Cable Ampacities - 600-Volt Cables
8.3-10	Cable Insulation
8.3-11	250-Volt Battery 1(2) (ESF Division 1) Load Requirements
8.3-12	125-Volt Battery 1A (2A) (ESF Division 1) Load Requirements
8.3-13	125-Volt Battery 1B (2B) (ESF Division 2) Load Requirements
8.3-14	ESF Division 3 (HPCS) 125-Vdc Battery Load Requirements
8.4-1	Unit 1 Primary Containment Penetration Conductor Overcurrent Protective Devices
8.4-2	Unit 2 Primary Containment Penetration Conductor Overcurrent Protective Devices

CHAPTER 8.0 - ELECTRIC POWER

LIST OF FIGURES

NUMBER	TITLE
8.1-1	Single-Line Diagram - 345-kv Switchyard
8.1-2	One-Line Diagram - Station Auxiliary Power
8.1-3	One-Line Diagram - Station Auxiliary Power Distribution System
8.1-4	Diagram of Switchyard D-C Control System
8.2-1	Transmission System Interconnections 1981 Conditions
8.2-2	Property Plan
8.2-3	Routing of Transmission Corridors 1981 Conditions
8.2-4	Minimum Calculated Running Voltages and Minimum Starting Bus Voltages
8.3-1	Block Diagram Relay and Control Bus 142Y, DG1A
8.3-2	Block Logic Diagram: Bus 143, Transformer 142, Diesel Generator 1B
8.3-3	Block Diagram Relay and Control Bus 151 (Typical)
8.3-4	Load Shedding Initiated by Undervoltage for 480-Volt ESF Buses 135X, 135Y, 136X, 136Y, and 143
8.3-5	Single-Line Diagram Relay and Metering Diesel Generator
8.3-6	48/24-Vdc #1 Unit 1
8.3-7	Electrical Drywell Penetrations Plant Elevation 740 feet 0 inch
8.3-8	Electrical Drywell Penetrations Plant Elevation 761 feet 0 inch
8.3-9	250-Vdc Engineered Safety Feature Division 1 - Unit 1
8.3-10	125-Vdc Engineered Safety Feature Division 1 - Unit 1
8.3-10a	125-Vdc Engineered Safety Feature Division 1 – Unit 2
8.3-11	125-Vdc Engineered Safety Feature Division 2 - Unit 1
8.3-11a	125-Vdc Engineered Safety Feature Division 2 – Unit 2
8.3-12	125-Vdc Engineered Safety Feature Division 3 - Unit 1

DRAWINGS CITED IN THIS CHAPTER*

DRAWING*	SUBJECT
M-130	Containment Combustible Gas Control System
1E-1(2)-4000A	Single Line Diagram - Generator Transformers and 6900-V Buses
1E-1(2)-4000B	Single Line Diagram - Standby Generators and 4160-V Buses
1E-1(2)-4000C	Single Line Diagram - 480-V Substations On Switchgears 151(251) and 152(252)
1E-1(2)-4000D	Single Line Diagram - 480-V Substations On Switchgears 141X(241X) and 141Y(241Y)
1E-1(2)-4000E	Single Line Diagram - 480-V Substations On Switchgears 142X(242X) and 143(243)

* The listed drawings are included as "General References" only; i.e., refer to the drawings to obtain additional detail or to obtain background information. These drawings are not part of the UFSAR. They are controlled by the Controlled Documents Program.

CHAPTER 8.0 - ELECTRIC POWER

8.1 INTRODUCTION

The Commonwealth Edison Company (CECo) offsite electric power system connections to LaSalle County Station (LSCS), described in detail in Section 8.2, are designed to provide a diversity of reliable power sources which are physically and electrically isolated so that any single failure can affect only one source of supply and cannot propagate to alternate sources.

The onsite electric power system is described in detail in Section 8.3. The station auxiliary electric power system is designed to provide electrical isolation and physical separation of the redundant power supplies for station requirements which are important to nuclear safety. Means are provided for automatic detection and isolation of system faults. In the event of total loss of auxiliary power from offsite sources, auxiliary power required for safe shutdown is supplied from diesel generators located on the site. The diesel generators are physically and electrically independent. Each power source, onsite and offsite, is physically and electrically independent up to the point of connection to the engineered safety features (ESF) system power buses. Loads important to plant safety are split and diversified between independent ESF switchgear groups.

Batteries are provided as sources of control power for the ESF electric power systems.

The safety loads that require electric power to perform their safety function are identified by function to be performed and are included in Tables 8.1-1 and 8.1-2 (a-c loads) and 8.3-10 through 8.3-13 (d-c loads). The electrical systems which power the ESF loads use IEEE standards as far as they apply.

The functions of these safety loads are described in Chapters 6.0 and 7.0.

The safety design bases used for the Class 1E electric systems are given in Table 1, "Design Basis Events," of IEEE 308-1974, "IEEE Standard Criteria for Class 1E Electric Systems for Nuclear Power Generating Stations."

The electric power system provides a reliable source of power for the reactor recirculation pumps and other auxiliaries during normal operation, and for engineered safety features during abnormal and accident conditions.

The plant consists of two main generating units designated as Unit 1 and Unit 2. Each main generator is directly connected to two half-size main power transformers through an isolated phase electrical bus duct. The two half-size main power transformers are connected in parallel at their high and low voltage terminals and

transform the output of each generator from generator voltage to a nominal 345-kV transmission system voltage.

The output of each unit's main power transformer is connected to a 345-kV switchyard section consisting of circuit breakers, disconnect switches, buses, and associated equipment arranged in a ring bus configuration as shown in Figure 8.1-1. Four overhead 345-kV transmission lines distribute power to the various points on the transmission system.

The 345-kV system provides redundant power sources to the two system auxiliary power transformers through two 345-kV ring buses (Figure 8.1-2). Each system auxiliary transformer has sufficient capacity to handle the auxiliary power requirements of one unit. Each of these auxiliary power supplies is available, through circuit breaker switching, to all emergency auxiliary equipment of both units and therefore serves as a redundant offsite source of essential auxiliary power.

Normal auxiliary power for each unit is supplied from the unit auxiliary power transformer, which is connected to the generator leads, and from the system auxiliary power transformer, which is connected to a 345-kV ring bus. Startup auxiliary power is provided through the system auxiliary power transformers via any one of the four 345-kV transmission lines which make up the offsite sources.

8.1.1 Offsite Power Systems - Summary Description

The CECo transmission system is interconnected with the MAIN (Mid-America Interpool Network) region utilities.

Four 345-kV transmission lines connect the station to the transmission system, as shown in Figure 8.1-1.

Electric energy generated at the station is stepped up to 345 kV by the main power transformers and fed into the station's 345-kV transmission terminal, which consists of ten circuit breakers and four transmission lines. The four 345-kV overhead lines exit the station via two separate rights-of-way and are connected into CECo's 345-kV system at the Braidwood Station and the Plano transmission substation.

The 345-kV transmission terminal is also connected to the 138-kV transmission system at LaSalle through a 345/138 kV transformer as shown in Figures 8.1-1 and 8.1-2. The 138 kV bus is connected to two 138 kV overhead lines that are routed to Streator and Mazon. The 138 kV transmission system provides power to the river screen house and on-the site 12-kV distribution system.

A one-line diagram of the transmission system interconnections and the 345-kV bus arrangement is shown in Figure 8.1-1. Two of the 345-kV transmission lines are in service for Unit 1. The remaining two lines apply for service with Unit 2.

The stations' 345-kV transmission terminal buses, which are continuously energized, serve as the preferred power source for the station's safety loads. Two physically independent circuits are provided for each unit, one via the unit's

assigned system auxiliary transformer, and the other from the system auxiliary transformer of the other unit.

Each circuit emanates from a separate, distinct transmission terminal ring bus section and is brought to the plant via separate transmission towers and right-of-way.

In addition, removable links are provided in the main generator leads which, when removed, make a third source of offsite auxiliary power available to each unit by backfeeding the unit auxiliary transformer through the main transformer.

8.1.2 Onsite Power Systems - Summary Description

The main power system is designed for the generation of electric power which serves: (a) for distribution to the offsite power system, and (b) to provide an independent source of onsite power for the onsite station auxiliary electric power system.

The onsite auxiliary electric power system is designed to provide reliable power service to those auxiliaries necessary for generation and to those auxiliaries important to nuclear safety. The design also provides for the electrical isolation and physical separation of redundant engineered safety feature power supplies and for the automatic detection and isolation of system faults.

Loads important to plant safety are divided into three groups and are fed from redundant Class 1E safety feature (ESF) switchgear groups.

The safety design bases used for the Class 1E electric systems are given in Table 1, "Design Basis Events," of IEEE 308-1974, "IEEE Standard Criteria for Class 1E Electric Systems for Nuclear Power Generating Stations."

In the event of total loss of auxiliary power from offsite and main power sources, the auxiliary power required for safe shutdown is supplied from redundant Class 1E diesel generators located on the site. The diesel generators are physically and electrically independent. Each ESF division power source, diesel-generator and offsite, is physically and electrically independent up to the point of connection to the ESF power system bus.

Batteries are provided as sources of control power for the ESF electrical power systems. The engineered safety features electric systems are designed in accordance with industry standards, criteria, regulatory guides, and other documents insofar as they apply except as otherwise indicated in the text.

There are no provisions for startup without offsite power. A sufficient number of stations on the Commonwealth Edison Company system have "black start" capability to supply adequate startup power to the remaining stations.

8.1.2.1 Unit Auxiliary Power System

The basic function of the auxiliary a-c power system is to provide power for plant auxiliaries during startup, operation, and shutdown and to provide highly reliable redundant power sources for loads which are necessary to plant safety. The auxiliary a-c power systems for the two-unit plant are shown in Figures 8.1-2 and 8.1-3.

A full-capacity unit auxiliary transformer is provided for each unit. These transformers are connected directly to their respective main generator buses, as shown on the diagram, and are capable of supplying all of the auxiliary power requirements of a unit during normal operation.

A full-capacity system auxiliary transformer is also provided for each unit. Each of these transformers is supplied from separate sections of the 345-kV ring bus as shown on the diagram and provides highly reliable auxiliary power supplies to both units from the 345-kV system. Both transformers are normally energized and thus provide an available offsite supply to the auxiliaries of both units.

As shown in Figure 8.1-3, power from the auxiliary transformers (UAT 141 and SAT 142 for Unit 1 and UAT 241 and SAT 242 for Unit 2) is distributed from five 4160-volt switch groups and two 6900-volt switch groups per unit. The 4160-volt switch groups which supply power to engineered safety features are buses 141Y, 142Y, and 143 for Unit 1 and 241Y, 242Y, and 243 for Unit 2; those which supply power to non-safety-related (NSR) equipment are buses 141X and 142X for Unit 1 and buses 241X and 242X for Unit 2. The 6900-volt switch groups supplying power to non-safety-related buses are 151 and 152 for Unit 1 and 251 and 252 for Unit 2.

Each of the seven switch groups, except bus 143 (243), can be fed from either UAT 141 (241) or SAT 142 (242). Bus 143 (243) can be fed only from SAT 142 (242). Upon a tripout of the main generator, those switch groups which, at that time, are fed from UAT 141 (241) are transferred automatically to SAT 142 (242) so that all seven switch groups of Unit 1 (2) will continue to be energized and are available for operating auxiliaries as required for a safe and orderly shutdown. In case of a tripout of SAT 142 (242) all switch groups transfer to UAT 141 (241) except for bus 143 (243), which is then fed by diesel generator 1B (2B).

8.1.2.2 Unit Class 1E A-C Power System

All of the ESF equipment required to shut down the reactor safely and to remove reactor decay heat for extended periods of time following a loss of offsite power

and/or a loss-of-coolant accident are supplied with a-c power from the Class 1E a-c power system. That portion of the station auxiliary power system which supplies a-c power to the ESF is designated as the Class 1E a-c power system. The unit Class 1E a-c power system is divided into three divisions (Divisions 1, 2 and 3 for Unit 1; Divisions 1, 2 and 3 for Unit 2), each of which is supplied from a 4160-volt bus (141Y, 142Y, and 143 for Unit 1 respectively).

Two ESF groups (Division 2 and 3) of each unit are supplied standby power from individual diesel-generator units, while the third ESF group (Division 1) for each unit obtains its standby power from a common diesel-generator unit, "0", which serves either of the corresponding switch groups in each unit (Bus 141Y or 241Y). With this arrangement, alternate or redundant components of all ESF systems are supplied from separate switch groups so that no single failure can jeopardize the proper functioning of redundant ESF.

The assignment of ESF equipment to the three electrical divisions for each unit is indicated in Table 8.1-1. The division of the ESF loads among the system buses is such that the total loss of any one of the three electrical divisions cannot prevent the safe shutdown of the reactor under any normal or abnormal design condition.

In the event of loss of offsite power supplies to an ESF 4160- volt switch group, there are provisions for automatic tripping of offsite supply circuit breakers, automatic shedding of certain non-ESF loads, automatic starting of the diesel generator, and automatic closing of the diesel-generator supply circuit breaker. Provisions are also made for sequential starting of certain ESF loads so as to prevent excessive overload of the diesel generators during their starting periods.

Automatic transfer capabilities are also provided in which failure of the normal supply causes immediate tripping of the normal supply breaker and closing of an alternate supply breaker.

8.1.2.3 Unit Reactor Protection System (RPS) Power System

The RPS power system includes the motor-generator power supplies and distribution panels with associated control and indicating equipment and the sensors, relays, bypass circuitry, and switches that cause rapid insertion of control rods (scram) to shut the reactor down.

Power to each of the two reactor protection trip systems is supplied, via a separate bus, by its own high-inertia a-c motor-generator set.

Alternate power is available to either reactor protection system bus from a transformer connected to a bus fed from the standby electrical power system. An interlock prevents feeding both reactor protection system buses simultaneously from this transformer.

8.1.2.4 Unit Class 1E D-C Power System

A 250-volt battery is provided for each unit to supply power to the turbine emergency bearing oil pumps, generator emergency seal oil pumps, backup feed to the computer, and RCIC system, as shown in Figure 8.3-9 for Unit 1. This figure is directly analogous to Unit 2 250-Vdc system.

Each unit is provided with three physically separate and electrically isolated sources of 125-Vdc ESF power (each with its own battery, battery charger, and distribution bus). Figures 8.3-10, 8.3-11, and 8.3-12 include in single-line from the Unit 1 125-Vdc systems. These figures are directly analogous to the Unit 2 125-Vdc systems.

The a-c power supply for the various ESF system auxiliaries is of prime importance and is almost entirely dependent upon the supply of 125-Vdc power to control the switchgear, relays, solenoid valves, instruments, etc.

8.1.2.5 Unit Non-Class 1E D-C System

One 125-Vdc system is required for operation of equipment at the river screen house.

The control power for the 138-kV and 345-kV switchyard breakers is supplied by two 58-cell, 125 volt, 270 ampere-hour batteries (non-safety-related) located in the switchyard relay house. The design of the protective relay circuits for the 345-kV oil circuit breakers and the 345-kV transmission lines is such that the loss of either battery or the loss of both batteries and associated feeder cables will not cause the loss of offsite power sources. Two protective relay systems are used on each transmission line and two trip coils are used on each 345-kV oil circuit breaker to assure tripping of faulted equipment (see Figure 8.1-4). The switchyard batteries and feeder cables are not physically or electrically associated with the station Class 1E battery circuits.

The physical design of the switchyard control power supplies incorporates the following features:

a. Two control power supplies, each consisting of a battery, battery charger, and distribution cabinets (one supply is located at each end of the relay house).

b. Two separate cable pan systems in the relay house basement.

c. Two separate access ducts for cables to exit relay house basement (one at each end of building).

d. Two separate concrete trough systems for feeder cable distribution in the switchyard proper.

Two independent ±24-Vdc systems are provided as the power supply for the neutron-monitoring and process radiation monitoring systems (Figure 8.3-6). This figure applies to Unit 1 but is directly analogous to the Unit 2 system.

8.1.3 Identification of Class 1E Loads

Nuclear safety-related systems and components that require electrical power to perform their nuclear safety function are defined as Class 1E loads.

Table 8.1-1 lists systems that require power to perform their nuclear safety functions. All electrical loads within these systems that are essential to the system nuclear safety function are therefore Class 1E loads.

The systems listed in Table 8.1-2 do not perform nuclear safety functions.

Tables 8.1-4 through 8.1-10 present detailed listings of station Class 1E loads.

Table 8.1-3 lists the industry electrical standards and codes which were used in the design of LSCS.

TABLE 8.1-1

POWER ASSIGNMENT OF SAFETY/RELATED SYSTEMS TO ELECTRICAL DIVISIONS FOR SEPARATION

DIVISION 1	DIVISION 2	DIVISION 3
RHR A	**RHR B & C	HPCS
LPCS	Automatic depressurization B	Diesel generator 1B (2B)
Automatic depressurization A	* Inboard isolation valves	125-Vdc system 3
* Outboard isolation valves	Diesel generator 1A (2A}	4160-volt bus 143 (243)
Diesel generator 0	ESF 125-Vdc system 2	480-volt MCC 143-1 (243-1)
ESF 125-Vdc system 1	4160-volt bus 142Y (242Y)	Auxiliary support systems, power and control for the preceding
4160-volt bus 141Y (241Y)	480-volt buses 136X (236X) and 136Y (236Y)	
480-volt buses 135X (235X) and 135Y (235Y)	SBGT	
**RCIC	**Fuel pool emergency makeup B	
**Standby liquid control A	**Standby liquid control B	
**Fuel Pool Emergency Makeup A	Combustible gas control	
MSIV-LCS	MSIV-LCS (U2 deleted, U1 abandoned-in-place)	
ESF 250-Vdc system 1	Aux. equip. room HVAC system OA (OB)	
480-Volt MCC 135X-1 (235X-1) MCC 135X-2 (235X-2) MCC 135X-3 (235X-3) MCC 135Y-1 (235Y-1) MCC 135Y-2 (235Y-2)	Control room HVAC system OA (OB)	
Auxiliary support systems, power and control for the preceding	480-volt MCC 136X-1 (236X-1) MCC 136X-2 (236X-2) MCC 136X-3 (236X-3) MCC 136Y-1 (236Y-1) MCC 136Y-2 (236Y-2) Auxiliary support systems, power and control for the preceding	

** All entries are ESF powered except those designated.
NOTE: Items in parenthesis indicate corresponding Unit 2 designations
* Divisional assignment of isolation valves takes precedence over the ESF system divisional assignment.

TABLE 8.1-2

NON-SAFETY-RELATED EQUIPMENT FED FROM CLASS 1E POWER SUPPLIES

SYSTEM	POWER SOURCE	ESF DIVISION
Control rod drive feed pump 1A (2A)	4160-volt bus 141Y (241Y)	1
Primary containment water chiller 1A (2A)	4160-volt bus 141Y (241Y)	1
480-volt switchgear 133 (233)	4160-volt bus 141Y (241Y)	1
Control rod drive feed pump 1B (2B)	4160-volt bus 142Y (242Y)	2
Suppression pool cleanup & transfer pump 1A (2A)	4160-volt bus 142Y (242Y)	2
Suppression pool cleanup & transfer pump 1B (2B)	4160-volt bus 141Y (241Y)	1
480-volt switchgear 134X and 134Y (234 & 234Y)	4160-volt bus 142Y (242Y)	2
Primary containment water chiller 1B (2B)	4160-volt bus 142Y (242Y)	2
Primary containment vent supply fan 1A (2A)	480-volt bus 135Y (235Y)	1
Cleanup recirculation pump 1A (2A)	480-volt bus 135Y (235Y)	1
Primary containment vent supply fan 1B (2B)	480-volt bus 136Y (236Y)	2
Turbine building 480-volt motor control center 136Y-3 (236Y-3)	480-volt bus 136Y (236Y)	2
Recirc. MG Set Drive Motor 1A (2A) Breaker 1A	4160-volt bus 141Y (241Y)	1
Recirc. MG Set Drive Motor 1B (2B) Breaker 1B	4160-volt bus 142Y (242Y)	2

TABLE 8.1-3

LIST OF NUCLEAR SAFETY ELECTRICAL DESIGN CRITERIA

1. IEEE Standard 279-1971 - "Criteria for Protection Systems for Nuclear Power Generating Stations."

2. IEEE Standard 308-1971 - "Standard Criteria for Class IE Electric Systems for Nuclear Power Generating Stations."

3. IEEE Standard 317-1971 - "Criteria for Electrical Penetration Assemblies in Containment Structures for Nuclear Power Generating Stations."

4. IEEE Standard 323-1971 - "General Guide for Qualifying Class I Electric Equipment for Nuclear Power Generating Stations."

5. IEEE Standard 336-1971 - "Installation, Inspection and Testing Requirements for Instrumentation and Electric Equipment during the Construction of Nuclear Power Generating Stations."

6. IEEE Trial-Use Standard 338-1971 - "Criteria for the Periodic Testing of Nuclear Power Generating Station Protection Systems."

7. IEEE Standard 344-1971 - "Guide for Seismic Qualification of Class I Electric Equipment for Nuclear Power Generating Stations," (ANSI N41.7).

8. IEEE Trial-Use Standard 379-1972 - "Guide for the Application of the Single-Failure Criterion to Nuclear Power Generating Station Protection Systems," (ANSI N41.2).

9. IEEE Trial-Use Standard 382-1972 - "Guide for the Type Test of Class I Electric Valve Operators for Nuclear Power Generating Stations," (ANSI N41.6).

10. IEEE Standard 383-1974 - "Type Test of Class IE Electric Cables, Field Splices, and Connections for Nuclear Power Generating Stations."

11. IEEE Trial-Use Standard 387-1972 - "Criteria for Diesel-Generator Units Applied as Standby Power Supplies for Nuclear Power Generating Stations."

TABLE 8.1-4

BUSES SUPPLIED BY UNIT AND SYSTEM AUXILIARY TRANSFORMERS

		BUSES SUPPLIED DIRECTLY		BUSES SUPPLIED BY BUS TIES	
UNIT NUMBER	TRANSFORMER NUMBER	BUS NUMBER	kV	BUS NUMBER	kV
1	141	151	6.9	141Y (ESF)	4.16
1	141	152	6.9	142Y (ESF)	4.16
1	141	141X	4.16		
1	141	142X	4.16		
1	142	151	6.9	141X	4.16
1	142	152	6.9	142X	4.16
1	142	141Y (ESF)	4.16		
1	142	142Y (ESF)	4.16		
1	142	143 (ESF)	4.16		
2	241	251	6.9	241Y (ESF)	4.16
2	241	252	6.9	242Y (ESF)	4.16
2	241	241X	4.16		
2	241	242X	4.16		
2	242	251	6.9	241X	4.16
2	242	252	6.9	242X	4.16
2	242	241Y (ESF)	4.16		
2	242	242Y (ESF)	4.16		
2	242	243 (ESF)	4.16		

TABLE 8.1-5

4160-VOLT ESF BUSES FOR UNITS 1 AND 2

UNIT NUMBER	ESF BUS NUMBER	ESF DIVISION NUMBER	kV	DIESEL GENERATOR	TIE TO BUSES
1	141Y	1	4.16	0	141X and 241Y
1	142Y	2	4 16	1A	142X and 242Y
1	143	3	4.16	1B	None
2	241Y	1	4.16	0	241X and 141Y
2	242Y	2	4.16	2A	242X and 142Y
2	243	3	4.16	2B	None

TABLE 8.1-6

LIST OF 480-VOLT ESF AUXILIARY POWER TRANSFORMERS FOR UNITS 1 AND 2

		480-VOLT ESF AUXILIARY POWER TRANSFORMERS					
UNIT NUMBER	ESF SUPPLY BUS	NUMBER SUPPLIED	TRANSFORMER NUMBER	VOLTAGE	kVA	NOMINAL IMPEDANCE	SAFETY CLASS
1	141Y	2	135X+Y	4160-480/277	1000	5.75%	1E (Division 1)
1	142Y	2	136X+Y	4160-480/277	1000	5.75%	1E (Division 2)
1	143	1	143-1	4160-480/277	225	3.30%	1E (Division 3)
2	241Y	2	235X+Y	4160-480/277	1000	5.75%	1E (Division 1)
2	242Y	2	236X+Y	4160-480/277	1000	5.75%	1E (Division 2)
2	243	1	243-1	4160-480/277	225	3.30%	1E (Division 3)

TABLE 8.1-7

EQUIPMENT SUPPLIED BY 4160-VOLT ESF BUSES - UNIT 1

BUS NUMBER	EQUIPMENT	RATING	CLASS
141Y	Control rod drive feed pump 1A	300 hp	Non-Class 1E
141Y	Residual heat removal pump 1A	800 hp	Class 1E
141Y	Low-pressure core spray pump 1	1500 hp	Class 1E
141Y	PRI CNMT water chiller 1A	600 kW	Non-Class 1E
141Y	4160/480-volt transformer 133	1000 kVA	Non-Class 1E
141Y	4160/480-volt transformer 135X	1000 kVA	Class 1E
141Y	4160/480-volt transformer 135Y	1000 kVA	Class 1E
141Y	Suppression pool cleanup & Transfer pump 1B	450 hp	Non-Class 1E
141Y	Recirc. MG Set drive motor 1A	400 hp	Non-Class 1E
142Y	Control rod drive feed pump 1B	300 hp	Non-Class 1E
142Y	Residual heat removal pump 1B	800 hp	Class 1E
142Y	Residual heat removal pump 1C	800 hp	Class 1E
142Y	Suppression pool cleanup and transfer pump 1A	450 hp	Non-Class 1E
142Y	PRI CNMT water chiller 1B	600 kW	Non-Class 1E
142Y	4160/480-volt transformer 134X	1000 kVA	Non-Class 1E
142Y	4160/480-volt transformer 134Y	1000 kVA	Non-Class 1E
142Y	4160/480-volt transformer 136X	1000 kVA	Class 1E
142Y	4160/480-volt transformer 136Y	1000 kVA	Class 1E
142Y	Recirc. MG Set drive motor 1B	400 hp	Non-Class 1E
143	High-pressure core spray pump	3000 hp	Class 1E
143	4160/480-volt transformer 143-1	225 kVA	Class 1E

TABLE 8.1-8

EQUIPMENT SUPPLIED BY 4160-VOLT ESF BUSES - UNIT 2

BUS NUMBER	EQUIPMENT	RATING	CLASS
241Y	Control rod drive feed pump 2A	300 hp	Non-Class 1E
241Y	Residual heat removal pump 2A	800 hp	Class 1E
241Y	Low-pressure core spray pump 2	1500 hp	Class 1E
241Y	PRI CNMT water chiller 2A	600 kW	Non-Class 1E
241Y	4160/480-volt transformer 233	1000 kVA	Non-Class 1E
241Y	4160/480-volt transformer 235X	1000 kVA	Class 1E
241Y	4160/480-volt transformer 235Y	1000 kVA	Class 1E
241Y	Suppression pool cleanup and transfer pump 2B	450 hp	Non-Class 1E
241Y	Recirc. MG Set drive motor 2A	400 hp	Non-Class 1E
242Y	Control rod drive feed pump 2B	300 hp	Non-Class 1E
242Y	Residual heat removal pump 2B	800 hp	Class 1E
242Y	Residual heat removal pump 2C	800 hp	Class 1E
242Y	Suppression pool cleanup and transfer pump 2A	450 hp	Non-Class 1E
242Y	PRI CNMT water chiller 2B	600 kW	Non-Class 1E
242Y	4160/480-volt transformer 234X	1000 kVA	Non-Class 1E
242Y	4160/480-volt transformer 234Y	1000 kVA	Non-Class 1E
242Y	4160/480-volt transformer 236X	1000 kVA	Class 1E
242Y	4160/480-volt transformer 236Y	1000 kVA	Class 1E
242Y	Recirc. MG Set drive motor 2B	400 hp	Non-Class 1E
243	High-pressure core spray pump	3000 hp	Class 1E
243	4160/480-volt transformer 243-1	225 kVA	Class 1E

TABLE 8.1-9

EQUIPMENT SUPPLIED BY 480-VOLT ESF SUBSTATION BUSES - UNIT 1

BUS NUMBER	EQUIPMENT	RATING	CLASS
135X	RHR service water pump 1A	200 hp	Class 1E
135X	Diesel-generator cooling water pump "0"	125 hp	Class 1E
135X	Reactor building motor control center 135X-1	250 hp	Class 1E
135X	Auxiliary building motor control center 135X-2	325 hp	Class 1E
135X	Auxiliary building motor control center 135X-3	250 hp	Class 1E
135Y	RHR service water pump 1B	200 hp	Class 1E
135Y	Primary cont. ventilation supply fan 1A	100 hp	Non-Class 1E
135Y	Fuel pool emergency makeup pump 1A	75 hp	Class 1E
135Y	Cleanup recirculation pump 1A	100 hp	Non-Class 1E
135Y	Reactor building motor control center 135Y-1	250 hp	Class 1E
135Y	Reactor building motor control center 135Y-2	250 hp	Class 1E
136X	RHR service water pump 1C	200 hp	Class 1E
136X	Diesel-generator cooling water pump 1A	75 hp	Class 1E
136X	Auxiliary equipment room refrigeration unit 0A	125 hp	Class 1E
136X	Auxiliary equipment room air-cooled condenser fan 0A	100 hp	Class 1E
136X	Auxiliary Equipment room supply fan 0A	100 hp	Class 1E
136X	Reactor building motor control center 136X-1	250 hp	Class 1E
136X	Auxiliary building motor control center 136X-2	325 hp	Class 1E
136X	Auxiliary building motor control center 136X-3	250 hp	Class 1E
136Y	RHR service water pump 1D	200 hp	Class 1E
136Y	Control room refrigeration unit 0A	100 hp	Class 1E
136Y	Control room air-cooled condenser fan 0A	100 hp	Class 1E
136Y	Primary cont. ventilation supply fan 1B	100 hp	Non-Class 1E
136Y	Fuel pool emergency makeup pump 1B	75 hp	Class 1E
136Y	Reactor building motor control center 136Y-1	250 hp	Class 1E
136Y	Reactor building motor control center 136Y-2	250 hp	Class 1E
136Y	Turbine building motor control center 136Y-3	250 hp	Non-Class 1E
136Y	Hydrogen recombiner power cabinet 1PLF3J	125 kVA	Class 1E

TABLE 8.1-10

EQUIPMENT SUPPLIED BY 480-VOLT ESF SUBSTATION BUSES - UNIT 2

BUS NUMBER	EQUIPMENT	RATING	CLASS
235X	RHR service water pump 2A	200 hp	Class 1E
235X	Reactor building motor control center 235X-1	250 hp	Class 1E
235X	Auxiliary building motor control center 235X-2	325 hp	Class 1E
235X	Auxiliary building motor control center 235X-3	250 hp	Class 1E
235X	Diesel-generator cooling water pump "O"	125 hp	Class 1E
235Y	RHR service water pump 2B	200 hp	Class 1E
235Y	Primary cont. ventilation supply fan 2A	100 hp	Non-Class 1E
235Y	Fuel pool emergency makeup pump 2A	75 hp	Class 1E
235Y	Cleanup recirculation pump 2A	100 hp	Non-Class 1E
235Y	Reactor building motor control center 235Y-1	250 hp	Class 1E
235Y	Reactor building motor control center 235Y-2	250 hp	Class 1E
235Y	Reactor building 480-volt power panel 235Y-3	160 kW	Non-Class 1E
236X	RHR service water pump 2C	200 hp	Class 1E
236X	Diesel-generator cooling water pump 2A	75 hp	Class 1E
236X	Auxiliary equipment room refrigeration unit 0B	125 hp	Class 1E
236X	Auxiliary equipment room air-cooled condenser fan 0B	100 hp	Class 1E
236X	Auxiliary equipment room supply fan 0B	100 hp	Class 1E
236X	Reactor building motor control center 236X-1	250 hp	Class 1E
236X	Auxiliary building motor control center 236X-2	325 hp	Class 1E
236X	Auxiliary building motor control center 236X-3	250 hp	Class 1E
236Y	RHR service water pump 2D	200 hp	Class 1E
236Y	Control room refrigeration unit 0B	100 hp	Class 1E
236Y	Control room air-cooled condenser fan 0B	100 hp	Class 1E
236Y	Primary cont. ventilation supply fan 2B	100 hp	Non-Class 1E
236Y	Fuel pool emergency makeup pump 2B	75 hp	Class 1E
236Y	Reactor building motor control center 236Y-1	250 hp	Class 1E
236Y	Reactor building motor control center 236Y-2	250 hp	Class 1E
236Y	Turbine building motor control center 236Y-3	250 hp	Non-Class 1E
236Y	Hydrogen recombiner power cabinet 2PLF3J	125 kVA	Class 1E

8.2 OFFSITE POWER SYSTEM

This section describes the offsite power system arrangement for LSCS.

8.2.1 Description

Electric energy generated at the station is transformed from generator voltage to a nominal 345-kV transmission system voltage by the main power transformers. The main power transformers are connected via intermediate transmission towers to the station's 345-kV transmission terminal consisting of circuit breakers, disconnect switches, buses, support structures, and associated relay protection equipment. A one-line diagram of the 345-kV bus arrangement is shown on Figure 8.1-1. Four 345-kV overhead lines exit the transmission terminal on two separate rights-of-way as shown on Figure 8.2-1, and are connected into ComEd's 345-kV system at the Braidwood Station and Plano transmission substation.

The 345-kV transmission terminal is also connected to the 138-kV transmission system at LaSalle through a 345/138 kV transformer as shown in Figures 8.1-1 and 8.1-2. The 138 kV bus is connected to two 138-kV overhead lines that are routed on separate right-of-ways. These 138-kV transmission lines connect to ComEd's 138-kV system at Streator and Mazon. One of the 138-kV lines provides power to the river screen house. The 138-kV transmission system also powers the on-site 12-kV distribution system.

8.2.1.1 Transmission Lines

Two of the 345-kV transmission lines, one from Braidwood and one from Plano, were placed in service prior to fuel loading for Unit 1. The remaining two lines were placed in service prior to fuel loading for Unit 2. The two 138-kV transmission lines were placed in service prior to fuel loading of Unit 1. The transmission structures are designed for heavy ice, high wind and broken wire loadings, and dampers are installed on all conductors and static wires to control high frequency vibration. Figure 8.2-2 indicates transmission line routing on the site property, and Figure 8.2-3 shows the proximity of other transmission lines.

8.2.1.2 Power Sources

The station's 345-kV transmission terminal buses are continuously energized and serve as the preferred power source for the station's safety loads. Two physically independent lines are provided for the station from the transmission terminal buses. Each line emanates from a separate and distinct bus section, and is brought to the plant via separate intermediate transmission towers. The system auxiliary transformers step the 345-kV system voltage down to the station 4160-volt and 6900-volt power systems. Each system auxiliary transformer is sized to provide the total auxiliary power for one unit plus the ESF auxiliary power for the other unit.

In an emergency, there are two breakers to allow 4160-volt switchgear 141Y of Unit 1 to be tied to 241Y of Unit 2, and two breakers to allow 4160-volt switchgear 142Y of Unit 1 to be tied to 242Y of Unit 2. This configuration provides the availability of redundant sources of offsite power. In addition, the main generator leads contain removable links that can make a third source of offsite auxiliary power available for each unit by backfeeding the unit auxiliary transformer through the main power transformers. Further discussion concerning the relationship between the station's offsite power system and the onsite auxiliary power system can be found in Subsection 8.3.1.

8.2.1.3 Transmission System

The probability of losing the offsite electric power supply has been minimized by the design of the Commonwealth transmission system. Increased reliability is provided through interconnections to neighboring systems. The Commonwealth transmission system consists, in part, of 74 345-kV lines totaling 2244 miles, and 3 765-kV lines totaling 152 miles. The transmission system is interconnected with neighboring electric utilities over 28 tie lines: 12 at 138 kV, 15 at 345 kV, and 1 at 765 kV.

Commonwealth is a member of Mid-America Interpool Network (MAIN). In general, all electric utilities in Illinois, northern and eastern Missouri, Upper Michigan, and the eastern half of Wisconsin are members of MAIN. The transmission within MAIN currently consists of 120 345-kV lines totaling 4714 miles and 3 765-kV lines totaling 152 miles.

The reliability of the transmission grid is demonstrated by the performance data of the 345-kV transmission lines. The average 345-kV line in the MAIN grid experienced 1.7 forced outages per year, with an average duration of 59 hours per forced outage during 1975 and 1976 covering 219 line years of exposure (References 1 and 2). For the 12 years between January 1, 1965, and December 31, 1976, the average Commonwealth 345-kV line experienced 1.9 forced outages per year, with an average duration of 7.8 hours per forced outage. This 12-year period represents 427 line years of experience. The causes of the forced line outages may be summarized as follows:

			% of Forced Outages
a.	terminal-related		
	1.	storm damage	3.4
	2.	equipment failure	18.4
	3.	human error	7.3
	4.	false trip	13.7
	5.	other	14.5
b.	line-related		
	1.	storm damage	17.5
	2.	equipment failure	3.0
	3.	other	13.7
c.	unknown		8.5
			100%

The only source of fire or explosion in the area of the switchyard would be the 345-kV circuit breakers, 138-kV circuit breakers and the 345-kV-138-kV transformer. This equipment along with the combined microwave and meteorological tower, are located so that the worst possible failure will not result in the total loss of offsite power.

The described design of the offsite power system is in compliance with NRC General Design Criterion 17 and Regulatory Guide 1.6.

8.2.2 Analysis

One of the functions of MAIN is to ensure that the transmission system is reliable and adequate. Power flow and transient stability studies are conducted on a regular basis using the criteria stated in Reference 3, a portion of which follows:

> "The generation and transmission system shall be adequate to withstand the most severe of the following set of contingencies without resulting in an uncontrolled widespread tripping of lines and/or generators with resulting loss of load over a large area:
>
> 1. Sudden outage of any tower line at the time when any other one circuit is out of service.
>
> 2. Sudden outage of any transmission circuit at a time when a combination of any three generating units is out of service.
>
> 3. Sudden outage of any double-circuit transmission tower line at a time when a combination of any two generating units is out of service.
>
> 4. Sudden outage of all transmission lines on the same right-of-way.
>
> 5. Sudden outage of any generating unit at a time when any two other generating units are out of service.
>
> 6. Sudden outage of all generating capacity at any generating plant.
>
> 7. Sudden outage of any transmission station, including all generating capacity associated with such a station.
>
> 8. Sudden dropping of a large load or a major load center.

9. Any credible contingency which might lead to system cascading." "The studies conducted to test the effect of the above contingencies should give due consideration to the following:

   a. Steady-state, dynamic and transient stability consideration, including three-phase faults at the most critical locations.

   b. The effect of slow fault clearing as a consequence of improper relay operation or failure of a circuit breaker to open.

   c. Possible occurrence of the above contingencies not only on the interconnected MAIN network, but also on the network of adjacent power systems, where a major contingency might involve MAIN or portions there of in a cascading incident.

   d. Expected normal and emergency power flow conditions.

The transmission system at Commonwealth is designed to meet all of these criteria.

The capacity of the Commonwealth transmission system to withstand the loss of transmission lines connecting the LaSalle 345-kV switchyard to the network has been investigated through stability studies to demonstrate adequacy of the transmission system during conditions before and after the installation of the Braidwood generation and its associated transmission.

The studies demonstrated the adequacy of the transmission system under various line contingencies on the LaSalle and Braidwood 345-kV lines. Contingencies studied were three-phase faults near the 345-kV switchyard, which are the most severe as concerns the stability of the units. Included were single-line faults with normal clearing of the line protective systems, and abnormal clearing involving the failure of a relay or circuit breaker. Other conditions studied were:

   a. double-line tower faults, and

   b. single-line faults during planned maintenance outages.

All units remained stable throughout all of the line outages mentioned.

A grid stability review was performed for the LaSalle Power Uprate Project which consisted of the following studies: steady state power flow analysis, voltage stability analysis, and transient stability analysis. The steady state power flow analysis reviewed the steady state loading on the transmission system with the uprate at LaSalle modeled. The steady state power flow analysis assessed the risk of facility overload caused by various contingencies (line outages, transformer outages, etc.). The power flow studies did not identify any significant additional risks with the LaSalle uprate included. The purpose of the voltage stability study was to identify the maximum loading the transmission system could withstand before a voltage collapse occurs. While the voltage collapse point did decrease slightly with the LaSalle uprate included, it was still within ComEd's planning criteria. The transient stability studies assessed the risk of generator instability after severe faults located at or near the generating station. The conclusion from these studies was that transient stability can be maintained for the severe faults (References 4-6).

8.2.3 Adequacy of Offsite Power Distribution Systems

8.2.3.1 Introduction

An analysis was made to show that the LaSalle County Station (LSCS) auxiliary electric system will provide adequate power to essential loads during the contingency which presents the largest load demand on the auxiliary system. This section presents the results of that adequacy study.

8.2.3.2 Adequacy of Offsite Power

Offsite power is supplied to LSCS by the Commonwealth Edison 345- kV system. There are four incoming lines, two for each unit. The 345-kV switchyard is arranged in a double ring bus, as shown in Figure 8.1-1. The switchyard arrangement is such that offsite power to both units cannot be lost due to any single failure.

The 345-kV system has four lines connected to the extensive Chicago area transmission system. As a result, the voltage variation band at the LSCS bus is quite narrow. The expected operating voltage range on the 345-kV busses is 354 kV to 362 kV. Lower voltages may be experienced rarely during severe generation and transmissions outages. The three-phase fault current level at LSCS ranges from 10395 MVA to 35000 MVA.

The station auxiliaries are served from two 6.9-kV and five 4.16-kV buses, as shown in Figure 8.1-2. The engineered safety feature loads are fed from three of the 4.16-kV buses (buses 141Y, 142Y, and 143). The two 6.9-kV buses (151 and 152) and the remaining 4.16-kV buses (141X and 142X) serve non-safety-related loads. The unit substations connected radially to the various 6.9-kV and 4.16-kV buses serve low voltage (480 volt) loads.

During normal operation, both the unit auxiliary transformer (UAT) and the system auxiliary transformer (SAT) supply the station auxiliary load as described in section 8.3.1.1.1. When the generator is not operating such as during start-up or shutdown or unit trip, the loads fed from the UAT are transferred to the SAT. The unit's SAT is the first offsite source to its safety-related buses. The SAT of the other unit is the second offsite source through bus ties provided between corresponding safety-related buses of the two units. These ties would be closed only in the event of loss of offsite power to one of the units.

8.2.3.2.1 Loading Analysis

The case chosen for detailed voltage evaluation represents the maximum loading to which the auxiliary system could be subjected under any mode of plant operation.

For this case it was assumed that the total non-safety-related load required by the unit (at full unit output) plus the unit's maximum safety-related load were supplied simultaneously from the SAT. All safety-related loads were assumed to operate at maximum output. The bus loadings under this condition are shown in Table 8.2-1.

In a loss of coolant accident (LOCA), the main generator would trip causing the loss of the UAT and automatically transfer all running loads to the SAT. Those safety-related loads which receive a LOCA automatic start signal would start. However, many of these loads would operate at less than full load until needed. Also, the non-safety-related load would decrease after a few minutes. As a result, the maximum auxiliary load following an accident would be less than that shown in Table 8.2-1.

In the case of a unit trip, the non-safety-related loads would be transferred to the SAT. However, the safety-related loads would not be started automatically. Thus, the resulting maximum load would be less than that for an accident situation.

In an accident or a unit trip, the UAT is not available to supply auxiliary power because it is directly connected to the generator bus. A study of UAT electrical performance, therefore, is not germane to this analysis.

Bus ties are provided from safety-related buses 141Y to 241Y and from 142Y to 242Y. These inter-unit ties are closed only when offsite power to one of the two units is lost. In accordance with Regulatory Guide 1.81, it is assumed in this analysis that the other unit is either running or is in a safe shutdown condition. Because the auxiliary system design for the two units at LSCS is similar, the voltages at the safety-related buses of Unit 1 while being supplied from Unit 2 SAT will be equal to or better than the worst case analyzed for Unit 1 SAT carrying the loads indicated in Table 8.2-1.

8.2.3.2.2 Criteria For Acceptable Voltage

The criteria for the acceptable voltage range at motors, contactors and control circuits is based on equipment ratings as defined by the National Electric Manufacturers Association (NEMA). These standards require that the maximum voltage should be limited to 110% of equipment rated voltage and the minimum voltage to be limited to 90% of equipment rated voltage.

In order to provide adequate torque for motor starting and to prevent contactors from dropping out at 480-volt motor control centers, the starting voltage should be limited to some acceptable level. The minimum acceptable level (i.e. starting voltage) for safety-related motors and contactors is based on the minimum equipment terminal voltages postulated at the lower analytical limit or design basis of the second level undervoltage protection setpoint.

8.2.3.2.3 System Performance

The small variation in the switchyard voltage at LSCS allows the maintenance of high running voltages without the danger of excessive overvoltages. The no-load voltages on the auxiliary system buses are shown in Table 8.2-2. In no case is the NEMA guideline of 110% of rated voltage exceeded.

A voltage analysis was made for the Unit 1 SAT carrying its worst-case loading. The SAT of the second unit can simultaneously carry a similar loading without affecting the results of this analysis. This is due to the fact that the only common element during this condition is the high-capacity 345-kV transmission network whose voltage is not measurably affected by the presence of the second unit auxiliary loads.

The minimum calculated running voltages on the various buses are shown in Figure 8.2-4. The voltages shown at the unit substations are the lowest on a 6.9-kV non-safety-related bus (131B), a 4.16-kV non-safety-related bus (132X), and a 4.16-kV safety-related bus (136X). In making the calculations, the minimum value of switchyard voltage and the maximum value of switchyard short circuit current were assumed. The running voltages at selected loads are shown in Table 8.2-3. These values include voltage drop in the cables from the bus to the load. The loads selected are those expected to have the maximum voltage drop from the bus to the equipment terminals.

The starting bus voltages are also shown in Figure 8.2-4. The starting voltage of the ESF loads is 3167 volts or 79.2% of motor-rated voltage. The ESF load includes all 4000-volt motors which would start in an accident as well as the difference between the maximum 480-volt loads on the ESF buses and the 480-volt ESF loads which would be present during normal operation of the station. All of these loads were assumed to start simultaneously with no sequencing of starting motors.

UFSAR Table 8.2-3 and Figure 8.2-4 provided the calculated running and starting voltages at the time of licensing. An analysis is performed for any modification that affects the AC auxiliary power system to ensure that acceptable running and starting voltages are present on the buses. The results of these evaluations is provided in the applicable voltage analysis.

8.2.3.3 Undervoltage Relays

Undervoltage relays are provided for each ESF bus to initiate load shedding and transfer the ESF load to the onsite diesel generator in case offsite power is lost or degraded. The minimum voltage to transfer load to the ESF buses is 2625 volts or 65.6% of 4000 volts for Divisions 1 and 2 and 2870 volts or 71.8% of 4000 volts for Division 3. Because the minimum expected voltage during normal or emergency operation, 3167 volts, is well above the relay setting, transfer to the onsite power

supply should not occur. The undervoltage relays incorporate sufficient time delay so that short circuits can be cleared without undervoltage relay operation.

Each 4.16 kV emergency bus has its own independent LOP instrumentation and associated trip logic. The voltage for the Division 1, 2, and 3 buses is monitored at two levels, which can be considered as two different undervoltage functions: loss of voltage and degraded voltage.

For division 1 and 2, each loss of voltage and degraded voltage function is monitored by two instruments per bus whose output trip contacts are arranged in a two-out-of-two logic configuration per bus. The loss of voltage signal is generated when a loss of voltage occurs for a specific time interval. Lower voltage conditions will result in decreased trip times for the inverse time undervoltage relays. The degraded voltage signal is generated when a degraded voltage occurs for a specified time interval; the time interval is dependent upon whether a loss of coolant accident signal is present. The relays utilized are inverse time delay voltage relays or instantaneous voltage relays with a time delay.

For Division 3, the degraded voltage function logic is the same as for Divisions 1 and 2, but the Division 3 loss of voltage function logic is different. The Division 3 DG will auto-start if either one of the two bus undervoltage relays (with a time delay) actuates and the DG output breaker will automatically close witht eh same undervoltage permissive provided that the Division 3 bus main feeder breaker is open and the DG speed and voltage permissives are met. The Division 3 bus main feed breaker trip logic includes two trip systems. Each trip system consists of an undervoltage relay on the 4.16 kV bus (with a time delay) and an undervoltage relay on the system auxiliary transformer (SAT) side of the main feed breaker to the 4.16 kV bus (with no time delay) arranged in a two-out-of-two logic. The trip setting of the SAT undervoltage relay is maintained such that it trips prior to the bus undervoltage relay. Either trip system will open (trip) the main feed breaker to the bus.

A loss of voltage signal or degraded voltage signal results in the start of the associated DG, the trip of the normal and alternate offsite power supply breakers to the associated 4.16kV emergency bus, and (for Divisions 1 and 2 only) the shedding of the appropriate 4.16 kV bus loads.

In response to the NRC's request, a second level of degraded grid voltage protection has been added at LaSalle. A brief discussion of the additional scheme is as follows.

Two undervoltage relays are installed on each 4 kV ESF bus; these are connected in a two-out-of-two logic similar to the existing undervoltage relays.

If no LOCA condition exists, operation of both of these added relays initiates an alarm in the control room and starts a 5- minute timer. If the degraded voltage is not corrected within the 5-minute period, the bus will automatically transfer from the offsite power source to an onsite diesel-generator.

However, this transfer cannot be completed until the bus voltage has dropped below the setpoint of the existing (first level) undervoltage relays. These relays must pickup to initiate load shedding (ESF Division 1 and 2), start the ESF Division 3 diesel generator, and allow the diesel generator output breaker to close. The second level of undervoltage protection trips all the power source breakers except from the diesel generator and starts the ESF Division 1 and 2 diesel generators. It also prevents the ECCS pumps starting until the bus voltage returns to normal.

If a LOCA condition does exist concurrent with degraded grid voltage, the above described control room alarm and automatic bus transfer will be initiated with the exception that the 5 minute delay period is eliminated.

Whenever the onsite diesel generator is the only source of power connected to an ESF bus, the second level of degraded grid voltage protection for that bus is disabled. The first level of undervoltage protection is never disabled.

This second level undervoltage protection has a nominal setpoint of 93.0% (+/-0.2%) of normal bus voltage with a short time delay; it picks up at 3870 volts (decreasing) on the buses with a 10 second delay to decrease the possibility of spurious operation due to transient voltage dips. The lower analytical or design basis of the second level undervoltage protection setpoint is 3814 volts or 91.7% of normal bus voltage. The upper analytical or design basis of the second level undervoltage protection setpoint is 3900 volts or 93.8% of normal bus voltage. The minimum voltage relay protection from the existing undervoltage relays is set to pick up at 2625 volts or 65.6% of the normal bus voltage for Divisions 1 and 2 and 2870 volts or 71.8% of the normal bus voltage for Division 3 as previously described.

8.2.3.4 Conclusion

This analysis shows that the auxiliary distribution system at LSCS has the capability to adequately handle worst case loading and maintain all voltages well within equipment ratings under the postulated most severe contingency conditions.

8.2.4 References

1. MAIN report entitled "Summary of MAIN Transmission Line Performance for the year 1975--345 kV and 765 kV."

2. MAIN report entitled "Summary of MAIN Transmission Line Performance for the year 1976--345 kV and 765 kV."

3. MAIN Guide No. 2, "Criteria for Simulation Testing of the Reliability and Adequacy of the MAIN Bulk Power Transmission System."

4. LaSalle County Station Power Uprate Project, Task 600, “Off-Site Power System/Grid Stability,” GE-NE-A1300384-57-01, Revision 0, October 1999.

5. Letter from J. A. Benjamin, Commonwealth Edison (ComEd) Company, to U. S. NRC, “Response to Request for Additional Information License Amendment Request for Power Uprate Operation,” dated 02/23/2000.

6. Letter from Charles G. Pardee, Commonwealth Edison (ComEd) Company, to U. S. NRC, “Response to Request for Additional Information License Amendment Request for Power Uprate Operation,” dated 03/24/2000.

TABLE 8.2-1

BUS LOADINGS ASSUMED FOR

OFFSITE POWER SUPPLY ANALYSIS

LOAD	MVA
6.9-kV Non-Safety-Related	32
4.16-kV Non-Safety-Related	15
4.16-kV Safety-Related	12
TOTAL	59

TABLE 8.2-2

NO-LOAD VOLTAGES

BUS	NO LOAD VOLTS	PERCENT OF EQUIPMENT RATING
Switchyard	362,000	---
6.9-kV Non-Safety-Related	7,240	109.6
Unit Subs Fed From 6.9-kV	504	109.5
4.16-kV Safety-Related and Non-Safety-Related	4,365	109.1
Unit Subs Fed From 4.16-kV	504	109.5

TABLE 8.2-3

RUNNING VOLTAGES AT SELECTED LOADS

LOAD	HP	RATED VOLTAGE (VOLTS)	RUNNING VOLTS	PERCENT OF MOTOR RATED	BUS
Reactor Recirculating Pump 1B	8900	6600	6598	100.0	152
Circulating Water Pump 1B	2000	4000	3920	98.0	142X
Service Water Pump 1B	1250	4000	3920	98.0	142X
Service Water Jockey Pump 0A	350	4000	3930	98.2	142X
Fuel Pool Emergency Makeup Pump 1A	75	460	442	96.1	135Y (141Y)
Control Room Supply Fan 0A	50	460	426	92.6	136X (142Y)
Fuel Pool Emergency Makeup Pump 1B	75	460	443	96.3	136Y (142Y)
HPCS Diesel Generator Cooling Water Pump	100	460	439	95.4	143-1 (143)

NOTE: The motor running voltage values are historical in nature. The most recent voltage values are provided in the latest AC auxiliary power system evaluation.

8.3 ONSITE POWER SYSTEMS

The following onsite power systems supply electrical power to the auxiliary electrical loads for each unit:

a. the unit non-Class 1E auxiliary a-c power system,

b. the unit Class 1E auxiliary a-c power system,

c. the RPS power system,

d. the unit Class 1E d-c power system, and

e. the instrument a-c power system (this system derives its power sources from the above systems).

The unit non-Class 1E auxiliary a-c and RPS power systems are not Class 1E and are described here only in sufficient detail to permit an understanding of their interactions with the two unit Class 1E systems.

The unit Class 1E systems (a-c and d-c) are described in sufficient detail to establish their functional adequacy to meet the current nuclear safety electrical design criteria listed in Table 8.1-3.

8.3.1 A-C Power Systems

8.3.1.1 Description

For additional information see Section 8.1.

The unit Class 1E a-c and non-Class 1E a-c power systems are shown in single-line form in Figures 8.1-2 and 8.1-3.

8.3.1.1.1 Unit Non-Class 1E Auxiliary Power Systems

The loads normally served by the unit non-Class 1E auxiliary power systems are those unit a-c loads that are not Class 1E. The system also serves as one onsite source for the unit Class 1E a-c power system (Figure 8.1-3).

The main components of the unit non-Class 1E auxiliary power system for Unit 1 (2) include the unit auxiliary transformer 141 (241), two 6900-volt switchgear buses 151 (251) and 152 (252), two 4160-volt switchgear buses 141X (241X) and 142X (242X), 18 480-volt unit substations, 39 480-volt motor-control centers, 22 480-/120-Vac lighting distribution cabinets, and 30 208-volt/120-Vac distribution panels.

The normal 6900-volt and 4160-volt power source for the unit non-Class 1E auxiliary power system is unit auxiliary transformer (UAT) 141. The transformer is sized to carry the total full-load auxiliary power required by the unit.

The UAT 141 primary is connected to the main generator bus via an isolated phase bus duct tap; the transformer 6900-volt winding is connected by nonsegregated phase bus duct to 6900-volt switchgear buses 151 and 152; the transformer 4160-volt winding is connected by nonsegregated phase bus duct to 4160-volt switchgear buses 141X and 142X. The isolated phase bus duct tap is sized to carry the full rating of UAT 141. The nonsegregated phase bus ducts are sized to carry the full load of the switchgear buses to which they are connected.

The reserve 6900-volt and 4160-volt power source for the unit non-Class 1E auxiliary power system is the system auxiliary transformer (SAT) 142. The transformer is sized to carry the total full-load auxiliary power required by the unit plus the ESF auxiliary power for the other unit.

The SAT 142 6900-volt winding is connected by nonsegregated phase bus duct to 6900-volt switchgear buses 151 and 152; the transformer 4160-volt winding is connected by nonsegregated phase bus duct to 4160-volt ESF switchgear buses 141Y, 142Y, and 143. Buses 141Y and 142Y can be connected by nonsegregated phase bus duct and the breakers ACB 1415 and ACB 1425, to 4160-volt switchgear buses 141X and 142X respectively. The nonsegregated phase bus ducts are sized to carry the full load of the switchgear buses to which they are connected.

When the unit is synchronized to the system, the preferred configuration is as follows:

a. 6900-volt bus 151 (251) is fed from UAT 141 (241), and 6900-volt bus 152 (252) is fed from SAT 142 (242).

b. The 4160-volt buses 141X (241X) are fed from UAT 141 (241).

c. The 4160-volt buses 141Y, 142X, 142Y, and 143 (241Y, 242X, 242Y, and 243) are fed from SAT 142 (242).

d. 4160-volt bus tie breaker ACB 1415 (2415) is open, and ACB 1425 (2425) is closed.

e. 4160-volt unit tie breakers ACB 1414 and ACB 1424 (ACB 2414 and ACB 2424) remain open.

Upon a tripout of the main generator those switch groups which, at that time, are fed from the UAT are automatically transferred to the SAT if it is available so that

all seven switch groups will continue to be energized and available for operating auxiliaries as required for a safe and orderly shutdown.

In the event of loss of the SAT, those switch groups which at that time are fed from the SAT--with the exception of 4160-volt bus 143 (243), which transfers directly to its associated diesel generator, 1B (2B)--automatically transfer to the UAT, if it is available, so that all seven switch groups continue to be energized and available for operating auxiliaries as required.

In the event of loss of both the UAT and SAT, undervoltage relays will automatically trip (open) all SAT 4160-volt feed breakers and trip (open) the bus tie breakers connecting buses 141X and 142X (241X and 242X) to buses 141Y and 142Y (241Y and 242Y) respectively, thus completely severing the unit non-Class 1E and the unit Class 1E auxiliary a-c power systems from each other.

Figure 8.3-3 shows, as a typical example, the logic associated with UAT 141 (ACB 1511) and SAT 142 (ACB 1512) feeds to 6900 Volt Bus 151.

8.3.1.1.2 Unit Class 1E A-C Power System

The loads served by the unit Class 1E a-c power system include all Class 1E a-c loads of that unit. The system also provides 4160-volt power sources to the non-safety-related 4160-volt buses 141X (241X) and 142X (242X) via bus tie breakers ACB 1415 (ACB 2415) and ACB 1425 (ACB 2425).

The connected loads, their ratings, bus assignments, division assignments, and locations are shown on Tables 8.1-7 through 8.1-10.

The coincidental loads for shutdown and LOCA operation (including maximum load sequencing times for a coincident loss of all offsite power) are shown in Table 8.3-1.

The main components of the unit Class 1E a-c power system for Unit 1 (or Unit 2) are three diesel generators, one of which is common to Unit 1 and Unit 2, three 4160-volt switchgear buses, four 480-volt unit substations, five 4160-/480-volt transformers, eleven 480-volt motor control centers (MCC's), and nine 208-/120-Vac distribution panels.

Components of the unit Class 1E a-c power system are assigned to three electrically and physically independent divisions as shown in Tables 8.1-1 and 8.3-1.

Class 1E loads with redundant safety functions are assigned to different divisions.

For each ESF unit, each Division 1 and 2 4160-volt bus, 141Y (241Y) and 142Y (242Y) is provided with four independent sources of a-c power as follows:

a. a normal (#1 offsite) source which is provided from the 345-kV system through the system auxiliary transformer (SAT) 142 (242) directly to buses 141Y (241Y) and 142Y (242Y);

b. a reserve (#1 onsite) source, available during unit operation, which is provided from the unit through the unit auxiliary transformer 141 (241) to buses 141Y (241Y) and 142Y (242Y) via bus tie breakers ACB 1415 (ACB 2415) and ACB 1425 (ACB 2425) with buses 141X (241X) and 142X (242X) respectively;

c. a standby (#2 onsite) source which is provided from the onsite diesel generators: 0 to buses 141Y or 241Y and 1A (2A) to bus 142Y (242Y); and

d. an emergency (#2 offsite) source (in accordance with NRC General Design Criterion 17) which is provided from the 345-kV system through the system auxiliary transformer (SAT) of the opposite unit to buses 141Y (241Y) and 142Y (242Y) via unit tie breakers ACB 1414 and ACB 2414 with bus 241Y (141Y) and ACB 1424 and ACB 2424 with bus 242Y (142Y).

(NOTE: The two unit ties listed in item d above each consist of 1200-ampere, 3-phase, 4160-volt nonsegregated phase bus duct provided with current differential relay protection. Each unit tie is provided with a circuit breaker at each end. The capacity of each unit tie is adequate for the ESF loads on the opposite unit bus.)

In addition to the four independent sources discussed above, a fifth source (#3 offsite available to both units) is available by virtue of removable links in the main generator isolated phase bus, which, when removed, allow backfeeding of the unit auxiliary transformer from the 345-kV system through the main power transformer. This source is similar to items b and d discussed above; however, it is available only when the unit is shut down and the generator disconnected.

For each unit, ESF Division 3 4160-volt bus 143 (243) is provided with two independent sources of a-c power as follows:

a. a normal (offsite) source which is provided from the 345-kV system through system auxiliary transformer (SAT) 142 (242), and

b. a standby (onsite) source which is provided from onsite diesel generator 1B (2B).

ESF electrical equipment is fed from 4160-volt buses 141Y (241Y), 142Y(242Y), and 143 (243), divided into three divisions, Divisions 1, 2, and 3, respectively, for each unit (Table 8.1-1).

The 4160-volt ESF buses can be fed from any of the sources described in the preceding; however, the normal source of power for ESF buses 141Y (241Y), 142Y (242Y), and 143 (243) is the 345-kV system (offsite) through SAT #142 (242).

When no offsite power is available through SAT 142 (242), the preferred configuration is ESF buses 141Y (241Y) and 142Y (242Y) fed from the unit (onsite) through UAT 141 (241) via bus tie breakers ACB 1415 (ACB 2415) and ACB 1425 (ACB 2425) with buses 141X (241X) and 142X (242X), respectively, with ESF bus 143 (243) fed from diesel generator 1B (2B).

Alternate configurations are (a) ESF buses 141Y (241Y) and 142Y (242Y) fed from diesel generators O (O) and 1A (2A), respectively, and (b) ESF buses 141Y (241Y) and 142Y (242Y) fed from the 345-kV system through SAT 242 (142) via unit tie breakers ACB 1414 and ACB 2414 with bus 241Y (141Y) and via unit tie breakers ACB 1424 and ACB 2424 with bus 242Y (142Y), respectively.

Power is required at all times to operate the various auxiliary systems. Some of these systems are required when the unit is operating; some are required only when the unit is shut down, and others are required only for abnormal conditions. Since engineered safety features fall into each of these categories it is essential to have auxiliary power at all times. Depending on the condition of the unit at any given time some power sources may not be available, therefore, a reliable power transfer scheme is furnished.

The transfer of a 4160-volt bus from one source to another can occur by: (a) manual transfer, (b) automatic fast transfer (approximately 8 cycles), or (c) automatic slow transfer (after motor loads have been shed).

Manual source transfers are accomplished by paralleling the incoming supply with the running supply, and then tripping the running supply. Once the incoming breaker is closed the outgoing breaker is tripped manually. This prevents continuous operation with two sources in parallel.

Automatic fast source transfer (i.e., automatic fast closing of a source breaker) of a bus occurs when the following conditions are fulfilled:

a. All source breakers to the bus are open.

b. At least one source is available to the bus at the instant all source breakers become open.

If more than one source is available to the bus, a source breaker is selected for automatic closure according to the following order of priority: unit or system auxiliary transformer source; diesel generator source.

Automatic slow source transfer of a bus occurs when the following conditions are fulfilled:

a. All source breakers are open.

b. Fast transfer has not resulted due to all sources being not "available to the bus."

c. A source becomes "available to the bus" after the bus undervoltage relays have tripped all bus breakers feeding motor services (e.g., a diesel generator becomes ready to accept the load).

If several sources become "available to the bus" after the motor loads are shed due to bus undervoltage, the breaker for the diesel generator source is closed.

Figure 8.3-1 shows, as a typical example, the logic for all the source breakers available to 4160 Volt ESF Bus 142Y. This figure also identifies several functions and components of the system which are not safety related. In particular, the manual and automatic (fast) closure of breaker ACB 1425 and the automatic (fast) closure of breaker ACB 1422 are non-safety-related functions; their sole purpose is to maintain continuity of electrical service to the power production plant components during auxiliary power system disturbances. The operation of these non-safety-related functions will in no way affect the performance of the engineered safety features of the Unit Class 1E A-C Power System. In all cases, power will be supplied to the 4160 Volt ESF buses either through manual transfer to one of the offsite sources, if available, or through automatic starting and loading of the diesel generators (as described later in the section).

Typical interlocking and permissives for manual and automatic circuit breaker operations are shown on the figures as designated in the following:

4160-V SWITCH GROUPS

DG 1A	ACB 1423	to BUS 142Y	Fig. 8.3-1
BUS TIE	ACB 1424-BUS 142Y	to UNIT 2 BUS 242Y	Fig. 8.3-1
SAT 142	ACB 1422	to BUS 142Y	Fig. 8.3-1
BUS TIE	ACB 1425-BUS 142Y	to BUS 142X	Fig. 8.3-1
DG 1B	CONTROL (START/STOP)		Fig. 8.3-2
DG 1B	ACB 1433	to BUS 143	Fig. 8.3-2
SAT 142	ACB 1432	to BUS 143	Fig. 8.3-2

480-V ESF BUSES

BUS	135X	LOAD SHED	Fig. 8.3-4
BUS	135Y	LOAD SHED	Fig. 8.3-4
BUS	136X	LOAD SHED	Fig. 8.3-4
BUS	136Y	LOAD SHED	Fig. 8.3-4
BUS	143-1	ALARM	Fig. 8.3-4

The power supply circuits are designed with fault protection devices to disconnect circuit faults from power sources; to disconnect the faulted component with minimum disturbance to the unfaulted portions of the system; and to secure the system from false disconnecting operations for any anticipated normal event.

Table 8.3-2 lists the 4160-volt circuit protective devices and their actions for various faults (Figures 8.3-1, 8.3-2, and 8.3-3). These figures and table apply to Unit 1 but are directly analogous for Unit 2.

Equipment fed from 480-volt switchgear has instantaneous and time overcurrent protection that is applied in accordance with latest engineering design practice.

Each 480-volt bus is supplied with undervoltage relays which shed appropriate loads on the buses when low voltage occurs (Figure 8.3-4). This figure applies to Unit 1 but is directly analogous to load shedding for Unit 2 480-volt ESF buses.

All MCC cubicles, except those with 120-Vac distribution equipment panels, are provided with manually-operated supply circuit breakers furnished with short circuit protection or combination starters. Each starter that is provided with an overload relay is also provided with an auxiliary relay to monitor the status of the overload relay contacts. This auxiliary relay is connected in the starter circuit so that, in addition to monitoring the status of the overload relay contacts, it also directly monitors the status of the control transformer and control circuit fuse and indirectly monitors the supply circuit breaker. As such, this auxiliary relay will detect the most frequent causes of starter control circuit non-operation.

The design of Class 1E motor-operated valve thermal overload protection circuits is discussed in Subsection 6.3.2.2.13.

All incoming 480-volt feeders from the 480-volt buses are bolted solidly to the main buses of their respective motor control centers.

The standby a-c power system consists of five diesel-generator sets for both reactor/turbine-generator units. One of the diesel sets is shared between Unit 1 and Unit 2 (Figures 8.1-2 and 8.1-3).

Each ESF Division has a diesel generator that serves as an independent onsite power source in the unlikely event of the simultaneous occurrence of a total loss of offsite power and a loss of the unit auxiliary power system.

The diesel-generator sets have ample capacity to supply all power required for the safe shutdown of both units in the event of a total loss of offsite power. Ample capacity is provided for the condition in which one unit may be involved in a loss-of-coolant accident while the remaining unit is being shut down without loss of coolant, as well as for the condition in which both units are concurrently being shut down without loss-of-coolant accidents.

The diesel generators are rated as indicated in Table 8.3-3. The continuous ratings of the diesel generators are based on the maximum coincidental LOCA or shutdown load expected. The starting systems are described in Subsection 9.5.6.

Control power for each diesel generator is supplied from the 125-Vdc battery within its associated division. The 125-Vdc control power for diesel-generator "O" is

supplied from either Unit 1 Division 1 or Unit 2 Division 1 as determined by the position of an automatic transfer switch located in the diesel generator "O" control panel. The automatic transfer switch seeks Unit 1 Division 1.

In the event of loss of all normal sources of power (onsite and offsite) to the Class 1E power system, each diesel generator set is automatically started and loaded. Controls and circuitry used to start and load the redundant units are independent of each other. The starting circuitry and control power is provided by a 125-Vdc battery for each division load group. The diesel generator automatic starting and loading proceeds as follows:

a. Each diesel generator is automatically started by one of the following events (Figure 8.3-2):

   1. Undervoltage develops on the associated 4-kV bus.

   2. Low water level develops in the reactor vessel.

   3. High pressure develops in the primary containment.

b. Should automatic fast source transfer fail to occur upon loss of voltage in the 4160-volt divisional buses, all 4-kV motor loads on the Division 1 and Division 2 buses are shed. Division 3 loads are not shed following a loss of bus voltage, since the total connected bus load is within the capacity of the diesel-generator set.

c. After each diesel-generator set has attained a normal frequency and voltage, its breaker closes if normal a-c power has been lost in the manner described above. This constitutes the automatic slow transfer scheme.

d. If normal a-c power is still present and the diesel generator was started by signals a.2 or a.3 preceding, the diesel-generator breaker does not close, and the set remains at full frequency and voltage until manually shut down. The diesel generators are not loaded for 15 minutes out of every 4 hours during accident standby operation. Diesel Engine maintenance and operation practices ensure they are capable of operating at less than full load for extended periods without degradation of performance or reliability.

e. If normal a-c power is lost and signals a.2 and a.3 are not present, only the loads needed for safe shutdown are connected automatically or manually by the operator's action as station conditions require.

f. If, while operating as per item e, signal a.2 or a.3 appears, the Division 1 and Division 2 diesel- generator breakers are tripped

causing all 4-kV motor loads to be shed from these buses. The Division 1 and Division 2 diesel-generator breakers then reclose and the required Class 1E loads are started automatically. Division 3 does not require load shedding and, therefore, upon appearance of signal a.2 or a.3 the diesel-generator breaker remains closed and the required Class 1E loads are started automatically.

g. If, while the diesel generator is connected to the bus during routine periodic load testing, signal a.2 or a.3 appears, the Division 1 and Division 2 diesel-generator breakers are tripped. If normal a-c power is still present the diesel-generator breakers do not reclose and the sets remain at full frequency and voltage until manually shut down. If normal a-c power is coincidentally or subsequently lost, all 4-kV motor loads are shed, the diesel-generator breakers are reclosed and the required Class 1E loads are started automatically. Division 3 does not require load shedding and, therefore, upon appearance of signal a.2 or a.3 the diesel-generator breaker remains closed and the required Class 1E loads are started automatically.

Electrical interlocks, consisting of mechanically actuated auxiliary breaker position switches, are provided to prevent an operator from paralleling, through the unit ties, two standby diesel generators without an offsite source connected to one of the associated ESF buses.

Additional interlocks prevent automatic closure of a standby diesel-generator breaker to its associated 4160-volt bus (supplying ESF loads), unless the normal (#1 offsite) source, the unit tie (#2 offsite) source, the bus tie (#1 onsite) source breakers are all open, the lockout relays for the normal (#1 offsite) source breaker or the diesel itself have not tripped, and an undervoltage condition exists on the bus.

All control circuits and their components including the bus transfer system are provided with means for manual testing during normal station operation and meet IEEE 279-1971 criteria. Means are provided to permit connecting selected non-1E loads in the station to the diesel-generator set within its capability. However, this is a strictly manual operation under the operator's full control.

Each diesel generator can be started manually either by a control switch located on the main control board or by a control switch located on the separate local control panel of the diesel generator (NOTE: diesel generator "O" has a control switch on both U-1 MCB and U-2 MCB). Diesel generators 1B and 2B are each furnished with a two-position selector switch ("remote" and "local") located at the remote control station in the control room.

The fuel oil system, air starting system, and generator output and excitation systems of each diesel engine are equipped with instrumentation to monitor all important parameters and to annunciate abnormal conditions.

Table 8.3-4 shows the protective and supervisory functions for each diesel generator. Instrumentation for diesel generator 1A is shown on Figure 8.3-5. The instrumentation for the other diesel generators is directly analogous.

The fuel oil storage and transfer systems are described in Subsection 9.5.4, lubrication systems in Subsection 9.5.7, and cooling systems in Subsection 9.5.5.

In addition to the periodic testing, each diesel generator undergoes a comprehensive functional test during refueling outages. This functional testing checks diesel starting, closure of the diesel breakers, and sequencing of loads on the diesel. During testing the diesel is started by a signal simulating a loss-of-coolant accident. In addition, an undervoltage condition is imposed to simulate a loss of offsite power. The timing sequence is checked to assure proper loading in the time required as indicated in Table 8.3-1. Periodic testing of the diesel and its various components plus a functional test at refueling intervals is used to demonstrate adequate reliability.

If a Division 1 or 2 diesel generator is automatically connected to its associated bus after the bus motor loads have been shed, the bus loads (if required) are sequentially started to keep the diesel-generator voltage and frequency above 75% and 95% of nominal rating respectively.

The maximum sequence times between diesel-generator breaker closure and service breaker closures are shown on Table 8.3-1. Division 3 loads are not shed following a loss of bus voltage, nor are they sequenced following a restoration of bus voltage.

One and only one diesel generator may be operated at any one time in parallel with another source for the purpose of testing. The diesel generators are used only for emergencies and testing. They are not used for peaking during normal operation of the station.

8.3.1.1.3 Unit Reactor Protection System (RPS) Power System

The reactor protection system is an electrical subsystem. It includes the motor-generator power supplies and distribution panels with associated control and indicating equipment, sensors, relays, bypass circuitry, and switches that cause rapid insertion of control rods (scram) to shut down the reactor. The reactor protection system is designed to meet the intent of the Institute of Electrical and Electronic Engineers (IEEE) Proposed Criteria for Nuclear Power Plant Protection Systems (IEEE 279) (see Subsection 7.2.3.2). The process computer system and

annunciators are not part of the reactor protection system. Although scram signals are received from the neutron-monitoring system, this neutron monitoring system is treated as a separate nuclear safety system.

The nuclear safety functions provided by the RPS system loads are actuated on loss of power (fail-safe); therefore, the system is not Class 1E.

The loads served by the system are (a) control power requirements of the RPS, (b) nuclear steam supply shutoff system, (c) average power range monitor subsystem of the neutron-monitoring system, and (d) process radiation monitoring system.

Power to each of the two reactor protection trip systems is supplied, via a separate bus, by its own high inertia a-c motor-generator set. Each generator has a voltage regulator which is designed to respond to a step load change of 50% of rated load with an output voltage change of not greater than 15%. High inertia is provided by a flywheel. The inertia is sufficient to maintain voltage and frequency within 5% of rated values for at least 1 second following a total loss of power to drive the motor.

The electrical protective assembly (EPA), consisting of Class 1E protective circuitry is installed between the RPS and each of the power sources. The EPA provides redundant protection to the RPS and other systems which receive power from the RPS buses by acting to disconnect the RPS from the power source circuits.

The EPA consists of a circuit breaker with a trip coil driven by logic circuitry. The logic circuitry which senses line voltage and frequency and trips the circuit breaker open, within a preset time delay, on the conditions of overvoltage, undervoltage, and underfrequency. Provision is made for setpoint verification, calibration and adjustment under administrative control. After tripping, the circuit breaker must be reset manually. Trip setpoints are based on providing 120-Vac, 60 Hz power at the RPS logic cabinets. The protective circuit functional range is ±10% of nominal a-c voltage and -5% of nominal frequency.

If the RPS bus voltage or frequency remains outside of the functional range for a period greater than the preset time delay, the EPA logic circuitry trips the circuit breaker. The EPA trip time delay is currently set at a nominal value of 3 seconds. Electrical Protective Assembly trip time delays of 0.1 to 4.0 seconds have been evaluated and found to have no adverse effect on loads powered from the RPS busses (Section 8.3.1.5, References 1 and 2).

The EPA trip setpoints are established in accordance with the following design limits:

Over-voltage	≤ 132 Vac
Under-voltage	≥ 108 Vac
Under-frequency	≥ 57 Hz

The EPA assemblies are packaged in an enclosure designed to be wall mounted. The enclosures are mounted on a Seismic Category I structure separately from the motor generator sets and separate from each other. Two EPAs are installed in series between each of the two RPS motor-generator sets and the RPS buses and between the auxiliary power source and the RPS buses. Six EPAs are normally installed in each plant. The block diagram in Figure 7.2-8 provides an overview of the six EPA units and their connections between the power sources and the RPS buses. The EPA is designed as a Class 1E electrical component to meet the qualification requirements of IEEE 323-1974 and IEEE 344-1975. It is designed and fabricated to meet the quality assurance requirements of 10 CFR 50, Appendix B.

The enclosures containing the EPA assemblies are located in an area where the ambient temperature is between 40° F and 122° F. The circuits within the enclosure are qualified to operate under accident conditions from 40° F to 137° F, at 10% to 95% relative humidity and survive a total integrated radiation dose of 2 x 10^5 rads. The assemblies are seismically qualified per IEEE 344-1975, to the safe shutdown earthquake (SSE) and operating base earthquake acceleration response spectra and environmentally qualified to the requirement of IEEE 323-1974. The enclosure dimensions are approximately 16 x 20 x 8 inches and accommodate power cable sizes from 6 AWG to 250 MCM.

Alternate power is available to either reactor protection system bus from a transformer connected to a bus fed from the standby electrical power system. An interlock prevents feeding both reactor protection system buses simultaneously from this transformer. Additional interlocks prevent paralleling a motor-generator set with the alternate supply. The backup scram valve solenoids receive d-c power from the 125-volt battery system.

Each MG set normally feeds one bus of the distribution panel. Manual transfer of one bus to the regulated transformer source is possible to permit servicing and maintenance of the MG set.

8.3.1.1.4 Instrument Power System

The objective of the instrument power supply and distribution system is to provide a reliable source of 120-Vac or 24-Vdc power to the instrument and computer systems. The 24-Vdc portion of the system is also presented here for completeness.

The 24-Vdc system is designed to provide power to the neutron-monitoring systems and process radiation monitors and has complete redundancy for each unit.

24-Vdc System

The system consists of two duplicate 24-volt, three-wire, grounded-neutral subsystems (Figure 8.3-6). This figure applies to Unit 1 but is directly analogous to the Unit 2 system. Each subsystem consists of two 24-volt batteries in series, center grounded at the control room, and connected to a d-c distribution panel. There are two 24-volt battery chargers for each subsystem. Each one is separately connected to a 24-volt battery. Power supplies for the battery chargers are from buses having a backup supply from the standby diesel-generator system. Each 24-Vdc subsystem is equipped with undervoltage and overvoltage alarms.

120-Vac Systems

The 120-Vac continuous power supply is designed to supply continuous power to the station computer and to those instrument systems which must remain in operation during a momentary loss of a-c power. It also provides a reliable source of power to these instrument systems which are not vital to plant operation and safety.

The 120-Vac continuous power supply (inverter) provides a reliable source of power which satisfies the voltage and frequency- variation limits of the station computer. Reliability is enhanced by the ability to transfer automatically from the normal 480-Vac source to the alternate 250-Vdc source with automatic return to the a-c source when power is restored. The 120-Vac continuous power supply is provided with a backup transformer capable of being fed from the standby diesel-generator system so that the inverter can be deenergized periodically for maintenance purposes.

The 120-Vac nonvital instrument power system consists of a series of distribution panels, each of which has a source of power from one 3-phase 480/120-208-Vac transformer. The feed from each transformer terminates in a distribution panel located in the 480-volt motor control center which supplies the transformer.

The 120-/208-volt instrument power supply and distribution load centers are fed from 480-volt breakers located in motor control centers. Load centers serving engineered safety feature Class 1E instrumentation and indication loads and other essential loads are Class 1E and are fed from Class 1E power system motor control centers.

8.3.1.2 Analysis

The following analysis demonstrates compliance with NRC General Design Criteria 17 and 18 and IEEE Standard 308.

Each unit of the station has available to it three separate diesel-driven power sources to provide electric power to three independent and redundant trains of

engineered safety features. Each unit also has separate battery power sources to provide power to the separate and redundant vital d-c loads.

The offsite electric power system connections to the station are designed to provide a diversity of reliable power sources which are physically and electrically isolated so that any single failure can affect only one source of supply and will not propagate to alternate sources (Section 8.2).

The station's auxiliary electric power system is designed to provide electrical isolation and physical separation of the redundant power supplies for station requirements which are important to nuclear safety. Means are provided for rapid location and isolation of system faults. Each separate power source, diesel-generator and offsite, is physically and electrically independent up to the point of connection to the ESF power buses. Redundant loads important to plant safety are split between the ESF switchgear groups (Figure 8.1-3). The ESF electrical systems are designed in accordance with IEEE Standards 279-1971 and 308-1971.

Provisions have been made in the design of offsite and onsite power systems for the inspection and testing of appropriate parts of the systems. Periodic tests can be made of major portions of the power systems under conditions simulating the design conditions.

The ESF equipment are tested to provide assurance that the systems operate as designed and are available to function properly in the unlikely event of an accident. The Class 1E power systems important to safety also meet the testability requirements of General Design Criterion 18.

Functional testing of ESF electrical auxiliary power equipment is done periodically. Whenever one of the components of an ESF system requires maintenance, the necessary correction is made, the component is retested, and the main channel or subsystem of which the faulty component was a part is retested to confirm that the channel or subsystem has been restored to serviceable condition following the maintenance.

Prototype qualification of one diesel generator, consisting of 300 valid start and sequential load tests with no more than three failures, is performed to demonstrate type reliability. In addition, a start test, a load test, a voltage stability and transient response test, and a test of the safety trips and alarms are conducted on each of the three non-GE-furnished diesel generators by the vendor.

Subsequent to site installation, preoperational testing was conducted on all diesel generators to demonstrate performance reliability. The tests consist of:

a. starting

b. load acceptance

c. design load

d. load rejection, and

e. diesel generator electric and subsystem capability.

Data acquired from preoperational testing were used to provide a basis for taking any corrective action needed and to develop an in-service periodic test program that will maintain high diesel generator reliability.

To ensure the operational readiness of each diesel generator, tests and inspections are conducted periodically. Each diesel generator is started and loaded for a period of time long enough to bring all the components of the diesel-generator system into thermal equilibrium. Should one of the components require maintenance, the necessary corrections are made and the component retested. The operational readiness test is then continued to completion.

The station batteries and other equipment associated with the d-c system are serviced and tested periodically. Typical battery tests are specific gravity and voltage of the pilot cell, temperature of the pilot cell, battery float current and overall battery voltage. Periodically, each battery is subjected to a rated load discharge test.

All electric system components supplying power to Class 1E electric equipment are designed to meet their functional requirements under the conditions produced by the design-basis events. All redundant equipment is physically separated to maintain independence and to minimize the possibility of common-mode failure. All Class 1E equipment is located in Seismic Category I structures.

The standby a-c power system provides a self-contained source of electrical power which is not dependent on auxiliary transformer sources of supply and which is capable of supplying sufficient power for those electrical loads which are required for the simultaneous safe shutdown of both units, including the load in one unit, which is required to combat a loss-of-coolant accident. The standby a-c power system produces a-c power at a voltage and frequency compatible with normal bus requirements. The standby diesel generators are applied to the various plant buses so that the loss of any one of the diesel generators will not prevent the safe shutdown of either unit. The total system satisfies single-failure criteria.

In the event that both sources of auxiliary power (system and unit auxiliary transformers) are lost for either one or both units, the auxiliaries essential to safe shutdown will be supplied by the corresponding diesel-driven generators. One

diesel generator is permanently assigned to each of the three engineered safety features electrical system 4160-volt buses for each unit.

Each diesel-generator system is housed in a separate room which is provided with an independent source of ventilation air. The design of the rooms prevents the possibility that missiles, explosion, and fire from one diesel generator might affect its redundant counterpart.

Each diesel-generator is designed and installed to provide a reliable source of redundant onsite-generated auxiliary power. It is capable of supplying the engineered safety features loads assigned to the engineered safety features electrical system bus which it feeds.

Each diesel generator and its associated auxiliaries are designed to meet the station Seismic Category I design criteria.

The diesel generators are so applied to their respective buses that the loss of one diesel generator cannot affect both of any two redundant buses. Therefore, safe shutdown capability will not be affected by such a diesel failure.

Criteria for Class 1E systems do not apply to the RPS power cables. The system is fail-safe and its power supplies are not necessary for scram. A total loss of power will cause a scram. Loss of one power source will cause a system trip.

8.3.1.3 Physical Identification of Safety-Related Equipment

8.3.1.3.1 General

Two methods of identification, color code and segregation code, are generally used to distinguish between Class 1E and non-Class 1E components, and between components of different divisions. Class 1E equipment is uniquely identified by color coding of all components according to the division to which they are assigned, as shown in Table 8.3-6. Segregation coding assignment is indicated in Table 8.3-5.

8.3.1.3.2 Raceway Identification

Each cable tray routing point is assigned a colored alphanumeric code shown on Table 8.3-6, which is applied to the sides of the cable tray at locations on the installation drawings. This identification number reflects the segregation code of the tray section and the unit of the station in which the tray is installed. A cable can only be routed and installed in a tray with the appropriate segregation code as specified in Table 8.3-5.

Exposed conduits are identified using the codes shown on Table 8.3-6 at the beginning and the end of the run, on both sides of a wall through which the conduit passes, and at both sides of junction boxes.

8.3.1.3.3 Cable Identification

Each cable listed in the cable tabulation is assigned a number for identification purposes. The number denotes the system to which the cable is assigned and the unit of the station to which the cable is assigned. This cable number appears on the electrical installation drawings and the wiring diagrams on which the terminations of the cable are shown. A cable identification tag made of a permanent material and displaying the assigned cable number and segregation code is affixed to each end of the cable. These tags also are colored to identify the applicable segregation code. Unit 1 and Unit 2 cables are identified as such by their assigned segregation codes. The segregation code and tag color are determined from Table 8.3-6.

8.3.1.4 Physical Independence of Redundant Systems

This subsection presents: (a) the criteria used to design and evaluate the physical independence of all station Class 1E components, including Class 1E control and instrumentation components as noted in Subsection 8.1.3; (b) the control procedures used to assure design and installation compliance with these criteria; and (c) the general arrangement of station Class 1E components.

8.3.1.4.1 General Criteria

The simultaneous occurrence of: (a) a single failure, (b) a loss of all offsite power, and (c) a design-basis event cannot disable any nuclear safety function.

Each Class 1E component is assigned to an ESF division.

Class 1E components with redundant safety functions are assigned to separate divisions unless specifically noted otherwise (IEEE 308/5.2.1, 5.3.1; IEEE 279/4.6). Assignments are made in accordance with Table 8.3-1.

Non-Class 1E non-division-associated components are electrically isolated from the Class 1E system by an acceptable isolation device.

8.3.1.4.2 Physical Separation Criteria

Class 1E components of an ESF division are physically separated from the Class 1E components of any other ESF division. Class 1E components are also physically separated from non-Class 1E or non-Seismic Category I, high-energy components that could cause loss of redundancy as the result of a design-basis event effecting failure of these components. A test (of the most limiting separation configuration) was performed to demonstrate that faults induced in non-safety-related cable will not cause the failure of adjacent safety-related cables. Wyle Test Report No. 46511-3,"Test Report on Verification Testing of Separation Between Class 1E and Non-class IE Power Cables in Raceways" was submitted by CECO to NRC by

letter dated May 3, 1983. Based on this report, the NRC staff have concluded that LaSalle separation configuration (depicted in the report) meets the objectives of IEEE Standard 384-1974 as augmented by Regulatory Guide 1.75 for separation of instrumentation, control and power cables; and the independance requirement of criterion 17 of Appendix A to 10 CFR 50.

Raceway Assignments

The design and installation of cable trays/conduit for power and control cables provides three separate, redundant paths (divisions) for the installation of engineered safety feature (ESF) cables both in and between the reactor building, auxiliary building, turbine building, and the diesel-generator rooms. This cable tray scheme satisfies the criterion set forth in Subsection 8.3.1.4.2.1 by meeting the following requirements:

a. All cable trays (power, control and instrumentation) in the reactor building and those containing cables between the reactor building and the auxiliary building, except those trays which must meet the requirements in Subsection 8.3.1.4.2.2 for reactor protection system cables, are assigned to one of the three ESF divisions. Since Division 3 contains only cables related to the HPCS system, it has considerably fewer cable trays than the other two divisions. Therefore, the reactor building and auxiliary building areas containing ESF cable trays are essentially divided into Division 1 and Division 2 areas.

b. All cable trays in the turbine building and those containing cables between the turbine building and the auxiliary building are designated as non-safety- related (NSR) trays and are not utilized for any RPS or ESF cables in this area. Those few RPS and ESF cables required in the turbine building are separately installed in conduit.

c. Cables associated with the ESF equipment are routed only in cable trays assigned to their respective divisions. A cable associated with the ESF equipment of one division has no portion of its run in any cable tray assigned to another division.

d. NSR cables in the reactor building can be installed in ESF trays. However, once committed to a tray of one division, that cable cannot be run in any trays of the other divisions, nor is it permitted to cross from an ESF to an NSR tray. Likewise, NSR cables in turbine building NSR trays are not permitted to cross into ESF trays from the reactor building. Subsection 8.3.1.3 describes the segregation codes which have been established to

ensure compliance with this requirement (Table 8.3-6). Reactor building auxiliaries which are not safety related, but which share power supplies with safety-related equipment, can have their cables installed only in ESF trays assigned to the same division as the power supply. For example, a reactor building closed cooling water pump motor fed from a 480-volt substation which is connected to 4-kV Bus 141Y (ESF Division 1) has its cables installed only in ESF Division 1 trays.

e. Cables associated with ESF systems whose sole function is to transmit indication and/or alarm signals are not designated as ESF cables. However, the location of their terminations and the design of the cable tray system result in their placement in trays assigned to the divisions of their respective systems.

8.3.1.4.2.1 Raceway Separation Criteria

Division Raceways

A raceway that carries a division cable is a division tray or conduit. Each division tray or conduit is restrictively assigned to a single division.

In Protected Zones

In areas having a low probability of being subject to damage from missiles and/or conflagration, cable trays and conduit of different ESF divisions are separated by a minimum horizontal distance of 3 feet side of tray to side of tray. Where a 3-foot separation between such cable trays is impracticable, exceptions are noted, and a barrier of 1-inch transite and a 6-inch total air space are provided to inhibit tray-to-tray fires. Vertical stacking is avoided for runs longer than 10 feet for trays or conduit assigned to different engineered safeguards divisions,but where this is impractical, a minimum vertical separation of 5 feet is maintained between the top of the lower tray or conduit and the bottom of the upper tray or conduit. In such cases the lower tray has a solid metal cover, which is raised if power cables are contained in the tray.

Cable trays and conduit of different engineered safeguards divisions may cross each other with a minimum vertical separation of 12 inches (metal to metal, not including the cover or the tray support).

A crossing is defined as the intersection of two paths of cable trays or conduit in which the acute angle between the centerlines of the converging paths is 45° or greater. In this case, where two cable trays cross, the lower tray must have a solid metal cover extending 5 feet on each side of the centerlines of the intersection. This cover must be raised if the lower tray carries power cables.

The clearance between the top of the lower cover and the bottom of the upper tray must be 8 inches or more.

The separation requirements for cable trays located in the cable spreading room are identified in UFSAR Section 7.1.3.4.3.d.

In Hazard Zones

Cable trays or conduit for only one ESF division are allowed in areas where they may be subjected to damage from large missiles or conflagration. A minimum tray separation of 20 feet or a 6-inch reinforced concrete wall must intervene between cable trays or conduit of redundant ESF divisions if they occupy such areas. The following LSCS areas are defined as hazard zones because of potential damage from large missiles or conflagration per the intent of this criterion:

Missiles	Fire (Conflagration)
Turbine Building Main Floor	Oil Storage Room
Reactor Feed Pump Turbines	Turbine Oil Tanks
Reactor Building Operating Floor	Inside turbine shield walls beneath main floor
	Diesel Fuel Oil Storage
	Generator Hydrogen System

In General Plant Zones

Open trays assigned to different divisions are separated by at least (a) 3 feet of horizontal free air space, (b) 5 feet of vertical free air space, or (c) a fire-resistant barrier with dimensions sufficient to maintain the minimum free air spacing of (a) and (b). This spacing applies to open trays. If the horizontal or vertical spacings are not possible, the limitations outlined in preceding paragraph "In Protected Zones" will apply.

8.3.1.4.2.2 Cable Routing Criteria

Electrical cable routing in LSCS is in accordance with the design criteria enumerated in the following. These criteria fulfill the following objectives:

a. to preserve the independence of redundant reactor protection system trip channels (subchannels), reactor vessel and primary containment isolation valves, emergency core cooling systems, and Class 1E electrical systems;

b. to prevent possible adverse influence of a non- safety-related cable on more than one of several redundant cables associated with any nuclear safety feature;

c. to reduce the noise level on instrument signal cables to a level suitable for reliable operation of instrument systems;

d. to withstand the environmental conditions in plant areas through which cables must pass without functional impairment; and

e. to retain a thermal margin (below design rating) over the heat generated in cable trays by current-carrying conductors.

Each safety-related cable is assigned to a Division 1, 2, or 3, according to Table 8.3-1.

Each non-safety-related cable which has any part of its length in a Division 1, 2, or 3 tray, or which connects to a Class 1E power system, or which shares an enclosure with a Class 1E circuit, or which is not physically separated from safety-related cables by acceptable distance or barriers is defined as a "division-associated cable." A division-associated cable is given a cable code of 11, 12, or 13 (see Tables 8.3-5 and 8.3-6). All division, division-associated and non-safety-related cables routed in their respective cable trays or that may interact with division, or division associated cables are fully qualified to the requirements of IEEE-383-1974.

Not all cables are qualified to IEEE-383-1974. Non-qualified cables do not have any impact on safety related cables. For example, non-safety related cables that are routed in enclosed raceways that are dedicated exclusively for their use, have limited free air routing, have no interaction with plant general safety related or division associated cables, and present an acceptable fire hazards/combustible loading risk may not be qualified to IEEE-383-1974.

For example, lighting and communication circuit cables installed in dedicated lighting and communication conduits need not be qualified to the requirements of IEEE-383-1974 (i.e., they are not safety related, are not installed in divisional, divisional-associated or non-safety-related raceways, do not interact with other plant cables and are acceptable fire hazard/combustible loading risk).

Each non-safety-related cable which is not a division-associated cable is given a cable code of W (Tables 8.3-5 and 8.3-6).

Division cables and division-associated cables are routed only in trays dedicated to that division.

Reactor Protection System (RPS) Cables

Separation of reactor protection system cables is in accordance with NSSS specifications which require that the reactor protection system logic cables conveying digital inputs from pressure, level, and valve limit switches to the scram contactors be divided into four groups of cables, each group being associated with one of the four trip system subchannels, A1, A2, B1, or B2. Each of these groups is routed in its own conduit, with groups A1 and B1 separated from their redundant counterparts A2 and B2 by a minimum distance of 3 feet horizontally and 5 feet vertically in areas where damage from fire is determined to be the most serious potential hazard. The conduits containing cables of groups A1 and B1 (as well as those containing A2 and B2 cables) need not be separated from each other by minimum physical distances, since these cables are not redundant.

Reactor protection system cables from the input sensors to the scram contactors are not routed in areas where a potential missile hazard could affect the redundant input circuits.

Cables containing bypass switch circuits and cables associated with manual scram circuits from the reactor control panel to each of the input subchannels A1, A2, B1, and B2 are routed in accordance with the requirements of this subsection.

The majority of the RPS low-level inputs are in the 172 LPRM cables from the power range neutron-monitoring (PRM) detectors to the PRM monitor cabinet in the control room. These cables in the neutron-monitoring system are treated differently from the above requirements for digital inputs because some but not all of them are averaged into 6 APRM outputs, two of which are then subdivided to provide 8 inputs to the reactor protection system, two to each subchannel. Therefore, the following special requirements apply:

a. LPRM cables beneath the reactor vessel and inside the support pedestal are neither grouped nor separated, because this location is a distribution area for these cables to their respective detectors, and because this location provides an adequate degree of protection from external elements during plant operating and shutdown periods.

b. LPRM cables are grouped at the inner end of the pedestal penetrations through which they pass and routed inside the

containment in four separate conduits and/or cable trays to their respective containment electrical penetrations. The makeup of each of these groups of LPRM cables is such that the loss of a single group cannot prevent a high neutron flux scram.

c. The four groupings of LPRM cables are maintained through the containment electrical penetration and are installed in four separate cable trays and/or conduit which carries them to the power range monitoring cabinet in the control room where the LPRM signals are averaged to form APRM's.

d. LPRM cables whose signals are not averaged may be routed in the same trays/conduit with the LPRM cables that provide inputs to the APRM's and hence to the reactor protection system.

e. These four groups of LPRM inputs are designated as groups NA, NB, NC, and ND. From the point where these cables are divided just inside the reactor support pedestal to their termination in the PRM cabinet, the trays and conduit containing each group are separated from each other by a minimum distance of three feet horizontally and five feet vertically unless analysis shows that more separation is required because of a potential missile hazard inside the primary containment. Outside the containment, the same restriction cited in the preceding discussion on routing cables through potential missile-hazardous areas applies.

f. The cables connecting the APRM digital trip outputs to the RPS trip channels are routed in accordance with the requirements of the preceding discussion.

The remaining low-level RPS inputs are the SRM and IRM inputs from the incore detectors to the startup range monitor cabinet, and the main steamline high radiation inputs from the detectors in the reactor building to the control room monitor cabinet. Although these inputs can be grouped similar to the digital inputs and need meet only the preceding requirements for separation of RPS digital inputs, for ease in routing they are grouped with and meet the more stringent requirements outlined above for LPRM inputs. Digital trip outputs from the SRM, IRM, and the steamline radiation monitors are routed in accordance with the requirements in the preceding discussion.

Cables from the scram contactors to the scram pilot valve solenoids are also separated into four divisions. Each of these divisions of cables is associated with the A and B solenoids of one of the four groups of control rods, G1 through G4,

regardless of the side of the reactor vessel on which the hydraulic unit is located. Cables of more than one of the four divisions were not installed in the same cable tray or conduit. These cable divisions are designated as G1, G2, G3, and G4.

Cables for the A and B solenoids of each HCU are run in the same conduit. Because the deenergization of both solenoids is required to scram each rod, the exposure of these cables to external hazardous events is reduced.

Since the HCU's are almost equally divided on both sides of the reactor containment, cables for each group of solenoid pilots must be divided as they leave the control room relay panel and then separately routed to their respective sides of the reactor. To further reduce the exposure of these cables to unspecified hazardous events, the G1 and G4 cables on each side are routed separately from the G2 and G3 cables between the control room relay panels and the local termination cabinets at the HCU's. Scram solenoid cables (G1 through G4) from these termination cabinets to the individual HCU's are routed in four separate conduits to each assemblage of HCU's.

Power cables for the reactor protection MG set power supplies to channels A and B are treated as non-safety-related cables and are routed in cable trays provided for those cables. Cables for one RPS MG set are not installed in the same trays/conduit as those for the other redundant MG set. This requirement applies: (a) to the feeder cables for the MG set motors, (b) to the cables from the generators to the distribution panels, and (c) to the MG set control cables. Minimum distances between conduits/cable trays for reactor protection system MG set cables are not stipulated because this system is designed to be "fail-safe", that is, loss or malfunction of these cables and components initiates rather than prevents a reactor scram. Cables from the RPS distribution panels to the trip channels A and B are installed in accordance with the requirements of the preceding discussion on separation of RPS digital inputs.

Primary Containment Isolation Valve

The primary containment isolation valve subsystems consist of the nuclear steam supply shutoff system (NSSS) and the primary containment isolation system (PCIS). The NSSS subsystem includes those valves on pipes which penetrate the primary containment and which connect to the reactor primary boundary. The PCIS subsytem includes those valves on pipes which penetrate the primary containment and are either open to the drywell or connect to closed piping systems other than the primary reactor boundary.

These valves are divided into two categories, inboard and outboard. Where two power-operated valves are furnished for isolation of a single pipeline with at least one of the valves located inside the primary containment, the valve inside the containment is the inboard valve. Where two power-operated isolation valves are

furnished, both outside the containment, the valve closer to the pipe penetration is the inboard valve. Where only one power-operated isolation valve is installed, it is assigned to either the inboard or outboard category, whichever is more suitable to its physical location.

The design of the input circuits, sometimes known as the incident detection circuitry, which automatically actuate the NSSS is such that it lends itself more toward the separation criteria established for the reactor protection system than for those associated with ESF. This circuitry is a logic arrangement with ESF. This circuitry is a logic arrangement with two trip systems, both of which must trip to initiate the isolation functions. Each of these trip systems has two trip logics, each of which receives an input signal from an independent sensor for each monitored variable. The design principle is therefore identical to that for the reactor protection system logic circuitry, which is commonly referred to as the "one-out-of-two taken twice" arrangement. In fact, many of the sensors and relays which actuate isolation valve logic channels also actuate the reactor protection system.

In order to ensure that no single credible event can prevent the reactor isolation valve system logic circuitry from performing the functions for which it is designed, the four trip logics are separated in accordance with the criteria established for the separation of reactor protection system digital inputs. The cables associated with the sensors, relays, and other components whose functions are shared between the NSSS/PCIS and the reactor protection system are routed with and identified as reactor protection system (RPS) cables. Those cables associated only with the NSSS/PCIS input circuitry are routed and identified as ESF cables.

The cables associated with the outputs from the NSSS/PCIS logic circuitry which automatically close isolation valves are separated in accordance with the provisions for ESF systems cables. All such cables for outboard valves are assigned to ESF Division 1. Cables for inboard isolation valves are assigned to ESF Division 2.

Those valve cables associated with the manual control of isolation valves (between the control room switches and the relay panels or motor control centers) are also separated in accordance with the provisions for ESF cables. Likewise, cables between local pushbutton and motor control centers for local manual operation of NSSS/PCIS valves are similarly treated.

The cables between NSSS/PCIS valves and their motive power supplies are also separated in accordance with the provisions for cables for the ESF systems. Power cables for outboard valves are assigned to ESF Division 1 and those for inboard valves to ESF Division 2.

The thermocouple cables and associated circuitry for the Main Steam Tunnel Leak Detection Delta T MSIV isolation are assigned to divisions in a way to prevent spurious unit trips due to a loss of division power. This assignment results in

functionally redundant components assigned to the same division. However, the circuits are designed such that a credible single failure, a loss of all offsite power and a main steam line leak will not prevent the MSIV isolation. The credible single failures considered include short circuits (including hot shorts), missiles, and the effect of the steam leak on the conduit including physical damage to the conduit and the temperature effect on the cable. The circuit is designed to detect a limited range of small main steam leaks within the Main Steam Tunnel.

8.3.1.4.2.3 Panel Criteria

In Protected Zones

ESF systems cables entering control room and auxiliary equipment room panels from the protected cable-spreading areas directly beneath these rooms must meet the following separation requirements, which modify those contained in Subsection 8.3.1.4.2.2:

a. Control room and auxiliary equipment room panels are generally designed and located so that cables for redundant ESF systems entering panel sections are separated by a minimum distance of 3 feet horizontally, in which case the criteria of Subsection 8.3.1.4.2.2 apply.

b. In those few situations where a minimum separation of three feet horizontally between cables of redundant divisions cannot be attained, the cables of one of the redundant divisions are installed in conduit from a point inside the panel where the fire barrier between divisions is effective to that point where a minimum separation of three feet is attained.

c. Non-safety cables routed with cables of one of the redundant ESF divisions are treated as engineered safeguards cables where they enter panels containing engineered safeguards components and thus meet the above criteria in these areas.

In Hazard Zones

Class 1E panels are not located in hazard zones where the hazard(s) originate(s) from Class 1E or Seismic Category I equipment of or asssociated with another division.

In General Plant Zones

Panels do not contain more than one division. Panels of different divisions are separated as required for enclosed raceways.

8.3.1.4.2.4 Containment Electrical Penetration Criteria

The electrical characteristics of all cables which enter the containment and their required separation distances are maintained through the electrical penetrations in the containment boundary. Containment electrical penetrations are installed in separate locations to ensure that the segregation and separation requirements of the succeeding sections of these design criteria can be met.

The required physical separation for penetrations serving Class 1E circuits is the same as that required for covered trays. Penetrations are assigned to equipment according to Table 8.3-1.

The electrical penetrations through the containment boundary are arranged in four quadrant groups on two levels as shown in Figures 8.3-7 and 8.3-8.

The cables for ESF Division 1 equipment are routed through penetrations on the two north quadrants, and the cables for ESF Division 2 equipment are routed through penetrations on the two south quadrants.

8.3.1.4.3 Cable Tray Criteria

All trays in Seismic Category I structures are Seismic Category I. The nuclear safety function of Division 1, 2, and 3 trays in Seismic Category I structures is to carry Class 1E cables without damage or functional degradation during a safe shutdown earthquake. The nuclear safety function of non-Class 1E trays in Seismic Category I structures is to preclude trays from becoming missiles during a safe shutdown earthquake.

Cable trays are made of galvanized steel with solid bottoms and sides. Ladder type trays of the same material are also used at switchgear motor centers and in certain locations where cable routing changes from one tray to another of the same category in the same tier. Solid covers are installed on each top tray for all horizontal tray runs under gratings and stairways and in open areas where cable damage from falling objects or collections of dirt and debris is likely. Cable trays for instrument cables with low-level signals have solid bottom sections as well as solid covers to provide adequate electromagnetic shielding. All cable trays are a maximum of 30 inches wide. Power cable trays are 4 inches deep. Control and instrument cable trays are 6 inches deep.

Solid covers are provided for all instrumentation cable trays. Solid covers are also provided where required to meet physical separation requirements.

Unless otherwise limited, the minimum vertical distance between stacked trays of the same division or between stacked trays of a non-safety-related system is 1 foot from the bottom of the upper tray to the top rail of the lower tray.

Administrative responsibility and control are provided to assure that the installation of electrical Class 1E equipment is in accordance with the design criteria.

8.3.1.4.4 Cable Criteria

Cables are designed for a plant life of 40 years under the following conditions:

a. Instrumentation, Control and Low Voltage Power

Normal operating and accident environments as presented in Section 3.11.

b. Medium Voltage Power (5- and 8-kV)

Similar to Section 3.11 except:

0-6 hours	212° F, 7 in. H_2O gauge, all steam
6-12 hours	150° F, 7 in. H_2O gauge, 100% relative humidity
12-hours-100 days	150° F, 0 in. H_2O gauge, 90% relative humidity.

Cable installation types installed at LSCS are listed in Table 8.3-10. Where possible, cables are not routed through a normally or potentially adverse environmental area if neither end of the cable terminates in that area.

Except for those cables required for lighting, heating, and ventilation, power cables are not routed into and through the control room, the computer room, the auxiliary equipment room, or the cable-spreading room beneath the control room. Power cables for heating, lighting, and ventilation in these areas are installed in conduit.

Class 1E cables must perform their safety functions during the worst-case design-basis event environment (usually LOCA), following 40 years of the worst-case normal environment.

The normal and LOCA environments for station areas are given in Section 3.11. The locations of Class 1E loads are given in Tables 8.1-4 through 8.1-10.

Power cables are installed in a separate tray system and are not intermixed with any other cable types. Power cables installed in stacked trays are, where practical, located in the highest-level tray. Power cables of different voltage ratings are installed in the same cable trays and/or conduit.

Control cables are not separated by voltage levels, since all control cables are insulated for 600 volts.

Control cables are run in a tray system separate from power and instrumentation cables.

Instrument cables of different voltage ratings are installed in the same trays and/or conduit provided their signals do not interfere with each other.

Instrumentation cables are installed in separate conduit or in separate nonventilated solid trays with covers to provide electromagnetic shielding. In general, instrumentation trays will occupy the lowest level of a stack of cable trays.

8.3.1.4.5 Control Procedures - Independence

Procedures have been established to implement design and construction compliance with the foregoing physical independence criteria.

The design procedures include those which (1) assure adequate physical separation between redundant Class 1E components, and (2) assure the proper assignment of cables to raceways.

In the station electrical physical design, areas of the plant are identified on electrical layout drawings as being either potentially hazardous ("hazard"), "protected", or "general" plant zones. The segregation codes for raceways and the electrical equipment division assignments also are identified on electrical layout drawings.

The station electrical physical design is reviewed periodically to determine (1) if the area zone classification should be changed because of the introduction or removal of a potential hazard, and (2) if the equipment and raceway locations in the zones are separated to the extent required by the detailed physical independence criteria.

The primary design document showing cable routing is the cable tabulation. In addition to routing information, the cable tabulation contains the following information for each cable:

a. Cable identification number.

b. Cable service.

c. Segregation code - an alphanumeric code to designate segregation where applicable.

d. Routing - an identifying number denoting a specific point in the cable tray installation through which the cable is routed.

The data contained in the cable tabulation as well as the raceway identification numbers are contained in a computer program. The program checks the cable routing for compliance as shown in Table 8.3-5 (cable tray segregation), and Table 8.3-6 (cable segregation).

Reactor protection system cables are assigned a three-character code. The RPS cable codes do not reflect the unit of the station, since all RPS cables are installed in a conduit system which is not interconnected between units. The first two characters of the RPS codes reflect the applicable segregation division, and the third character denotes the type of cable (P, C, or K) (Table 8.3-6).

There are six safety-related systems which have special separation requirements. Two of them, the reactor core isolation cooling (RCIC) system and the standby liquid control (SLC) system, are not ESF systems. But, because of system requirements, their interconnecting cables are separated and routed with ESF cables. The RCIC system cables are separated from the high- pressure core spray (HPCS) system cables (Division 3) by routing them with ESF Division 1 cables. The standby liquid control system cannot be vulnerable to a single electrical failure, so its redundant cables are routed with ESF Divisions 1 and 2.

Three additional systems with special separation requirements are the standby gas treatment (SBGT) system, the control room HVAC system and the auxiliary electric equipment room HVAC system, all of which are ESF systems. Redundant components and power supplies for these systems are, however, located in each of the two units. To ensure that the cables for these redundant subsystems are separated and that each subsystem is fed from separate offsite and onsite power supplies, the redundant subsystem cables are routed with ESF Division 2 of Unit 1 and ESF Division 2 of Unit 2, respectively. Interconnections between the two subsystems are routed in conduit in the opposite unit and separated in accordance with the requirements of Subsection 8.3.1.4.2. The provisions of the following paragraphs ensure that redundant cables are not routed in the same cable tray or trays in close proximity.

A pull card for each cable pulled is signed by a contractor's representative as verification that the cable actually was pulled over the route specified in the cable tabulation.

Unit 1 cables are routed only in Unit 1 cable trays and are not permitted in Unit 2 trays. Likewise, Unit 2 cables are routed only in Unit 2 trays and are not permitted in Unit 1 trays.

Visual inspections of the cable and raceway color codes are used to verify that proper separation of redundant Class 1E cables has been maintained.

The final system with special requirements is the combustible gas control system, which is also an ESF system. This system has redundant components and power supplies located in each of the two units. Cables for these redundant subsystems are treated in exactly the same manner as indicated above for those in the SBGT, control room HVAC and auxiliary electric equipment room HVAC systems, with the exception of the divisional assignments of those for the Unit 1 and Unit 2 crosstie valves. Cables for the crosstie valves allowing the Unit 2 hydrogen recombiner to serve the Unit 1 containment are designated as electrical Division 1 and routed exclusively within Unit 1. (See Drawing No. M-130.) Likewise, crosstie valve cables allowing Unit 1 hydrogen recombiner to serve the Unit 2 containment are designated as electrical Division 1 and routed exclusively within Unit 2. Physical separation is in accordance with the requirements of Subsection 8.3.1.4.2.

8.3.1.4.6 General Arrangement of Class 1E Components

Physical independence of redundant Class 1E components is maintained primarily by the reservation of building segments for exclusive division use.

Major electrical equipment locations are indicated in general arrangement drawings listed in the Table of Contents of Chapter 1.

Class 1E equipment in the containment building generally is allocated to building quadrants as follows:

ESF Division	Quadrants
1	Northeast and Northwest
2	Southeast and Southwest
3	Northeast, at elevation 761 feet

Redundant Class 1E equipment in the auxiliary building generally is assigned to separate areas of the building.

8.3.1.5 References

1. Letter from Mr. H. R. Peffer (General Electric) to Mr. T. E. Watts (Commonwealth Edison Co.), Dated February 22, 1983.

2. Letter from Mr. H. R. Peffer (General Electric) to Mr. T. E. Watts (Commonwealth Edison Co.), Dated March 1, 1983.

8.3.2 D-C Power Systems

8.3.2.1 Description

The d-c power-distribution system and batteries are designed to provide control power for switchgear groups, diesel generators, relays, solenoid valves, and other electric devices and components.

Batteries are provided as a source of power for vital loads in case of emergencies such as loss of a-c power.

The d-c system and batteries are designed to provide control power for both normal and emergency operation of plant equipment and to provide power for automatic operation of the engineered safety feature protection systems during abnormal and accident conditions (LOCA).

The d-c power system of each unit includes the unit Class 1E d-c power system and the non-Class 1E 24-Vdc power system. The d-c system is shown in single-line form in Figures 8.3-6 and 8.3-9 through 8.3-12. These figures apply to Unit 1 but are directly analogous to the Unit 2 d-c system.

8.3.2.1.1 Unit Class 1E D-C Power System

Each unit has one 250-volt power battery and three 125-volt control batteries located in ventilated rooms having concrete walls. The 250-volt battery is adequately sized to supply its loads until a-c power sources to redundant loads are restored (Figure 8.3-9). Each 125-volt battery is sized to supply control power requirements of the switchgear and logic circuitry of one of the three engineered

safety features divisions (Figure 8.3-10). The redundancy and independence of these load groups is the same as that described for the 4160-volt and 480-Vac Class 1E load groups.

Each battery has its own charger with a capacity for restoring it to full charge under normal load in a time commensurate with the recommendations of the battery vendor. Each Division 1 and 2 125Vdc battery has two fully redundant battery chargers capable of supplying at least 200 amperes at a minimum of 130 volts for at least 8 hours. The Division 3 battery charger will supply at least 50 amperes at a minimum of 130 volts for at least 8 hours. Battery chargers are powered from a-c sources, and in case of loss of normal a-c power from both on-site and off-site sources, can be supplied from the standby diesel generators associated with their respective engineered safeguards divisions.

Each battery subsystem is complete with its main distribution center, battery charger, and accessory equipment. Each battery subsystem is physically separated from its redundant system so that any failure involving one system cannot jeopardize the other system.

During an actual failure of normal power, the diesel-generator power supply establishes battery charger input and thereby reduces the drain on the battery subsystem. The ampere-hour capacity of each battery is sized to supply all essential loads until a-c power is restored to power its battery chargers (Tables 8.3-11, 8.3-12, 8.3-13, and 8.3-14). See section 15.9.3.2 for battery requirements concerning station blackout capability.

The battery charger associated with each Division 1 or 2 battery is rated to supply the normal plant d-c loads while its battery is returned to or maintained in a fully charged state.

The battery equipment is designed and rated for operation for a 40-year plant life with reasonable maintenance and replacement of parts. The ESF portion of the equipment covered by this design criterion is designed (Seismic Category I) to withstand all postulated design-basis accidents without loss of operating capability under seismic and accident environmental conditions.

The d-c loads served by the battery subsystems include all the 125-Vdc and 250-Vdc loads of the station, both Class 1E and non-Class 1E.

The system-connected loads are identified in Table 8.3-1 and Figure 8.1-3.

The d-c loads of ESF Divisions 1, 2, and 3 are supplied from three independent d-c systems. Table 8.3-11 lists all the 250- Vdc loads of both Class 1E and non-Class 1E of Division 1. Tables 8.3-12, 8.3-13, and 8.3-14 list all the 125-Vdc loads both Class 1E and non-Class 1E of Divisions 1, 2, and 3, respectively.

Components

Each battery has its own independent instrumentation. The following monitoring features are provided for continuous supervision of each 125-Vdc and 250-Vdc subsystem:

a. for ESF Divisions 1 and 2, a local d-c voltmeter with a selector switch to indicate the d-c output voltage at the distribution panels or bus; for ESF Division 3, a local d-c voltmeter to indicate the bus voltage;

b. local and remote d-c voltmeter to indicate the d-c output voltage of the battery charger;

c. local and remote d-c ammeter to indicate the d-c output current of the battery charger;

d. except for ESF Division 3, power failure alarm relay which indicates a loss of a-c power to the battery charger;

e. local and remote d-c ammeter to indicate the output or input current of each battery;

f. except for ESF Division 3, charger low d-c voltage alarm relay;

g. charger high d-c voltage shutdown relay;

h. recording ground-detector voltmeter and alarm;

i. except for ESF Division 3, breaker trip alarms on the battery, battery charger, breakers, and alarms when bus tie breakers are closed;

j. d-c bus undervoltage alarm;

k. battery high discharge rate alarm;

l. battery charger high current output alarm;

m. battery instrumentation failure alarm;

n. remote d-c voltmeter in control room to indicate the bus voltage; and

The following overcharging protection is provided:

a. A high-voltage shutdown relay opens the main supply breaker to the charger when the d-c output voltage of the charger rises to approximately 15% over the battery float voltage.

b. A d-c-indicating voltmeter provides a visual check on battery voltage.

Local instruments are located on either the d-c distribution panel, d-c instrumentation panel, or battery charger. Remote instruments are located in the control room. The alarms are annunciated in the main control room. This instrumentation and the related alarms provide reliable supervision of the condition of the overall d-c system but do not by themselves provide detailed information on the condition of each battery as a component.

Batteries and battery chargers distribution centers and control feeds have the following characteristics except for Division 3:

a. Battery Design

	24-Volt	Div I 125-Volt	Div II 125-Volt	250-Volt
Number of cells	12	58	58	116
Normal drop in specific gravity (discharge level)	0.064	0.126*	0.126*	0.139*
Normal average voltage range per cell - Unit 1: - Unit 2:	 2.17 – 2.25 2.17 – 2.25	 2.17 – 2.25 2.17 – 2.25	 2.17 – 2.25 2.17 – 2.25	 2.17 – 2.25 2.17 – 2.25
Normal specific gravity at 77°F	1.215	1.215	1.215	1.215
* Normal drop in specific gravity for an 8-hour discharge to 1.81 volts per cell.				

b. Battery Chargers

1. Overload protection: circuit breaker

2. Transient voltage protection: surge suppressors

3. Regulation: ±1% from zero to 100% and/or: a-c line voltage changes of ±10% and/or, a-c line frequency changes of ±3% for the 24-volt chargers (battery disconnected), and ±5% for all other chargers.

4. The battery charger limits d-c current output to 125% of rated level at about 80% of float voltage.

   The 480-volt, 3-phase input of each battery charger is supplied from its respective 480-volt ESF motor control center through a manually operated breaker. This breaker is furnished with instantaneous and thermal magnetic overload trips.

   At the charger cubicle, the a-c supply to the battery charger is controlled by a manually operated 3-pole circuit breaker. This breaker is tripped by operation of a high-voltage sensing d-c relay which monitors the d-c output voltage of the battery charger.

c. <u>125-volt and 250-Vdc distribution centers</u>

Service:
125-Vdc and 250-Vdc.

Circuit breakers (two-pole):
All circuit breakers have an interrupting capacity of 20,000 amperes at 250 Vdc.

The following d-c breakers on the d-c main bus are provided with breaker alarms:

1. charger to battery bus breaker (on trip), and

2. bus tie to d-c bus on opposite unit (non-redundant bus on close).

A 6-position, maintained-contact type control switch installed on each d-c bus provides readout of d-c voltages of charger output or bus voltage at the voltmeter on the same panel. This voltage reading facilitates paralleling operations between the bus, battery, and charger.

A recording and contact-making ground-detector voltmeter is installed on each battery. This d-c voltmeter has a range of -150 to 0 to +150 volts for the 125-Vdc system and range of -300 to 0 to +300 volts for the 250-volt system.

d. Control Feeds to Equipment

Circuit breakers are used to isolate the control feeds supplying the following equipment:

1. 6900-volt, 4160-volt and 480-volt switchgear groups;
2. main control board;
3. hydrogen and stator cooling panel;
4. annunciator input relay logic cabinet;
5. annunciator input cabinet;
6. generator and transformer relay and metering panel; and
7. control panels for diesel generators.

125-Vdc buses 1A, 1B and 1C (for Unit 1) are mutually redundant for Unit 1. Similarly, buses 2A, 2B, and 2C are mutually redundant for Unit 2. This design allows for the single failure or loss of one redundant d-c bus on each unit during simultaneous accident and loss-of-offsite-power conditions without adversely affecting the safe shutdown capability of the plant.

The tie between panels 111Y and 211Y, the tie between panels 112Y and 212Y, and the tie between panels 113 and 213 (ESF d-c buses for Unit 1 and Unit 2) are each provided with two normally open, manually operated circuit breakers as indicated on Figures 8.3-10, 8.3-11, and 8.3-12 respectively. These bus ties are provided so that the nonredundant d-c buses of Unit 1 and Unit 2 can be interconnected during maintenance and testing operations for the battery and/or battery charger associated with either bus 111Y or 211Y, bus 112Y or 212Y, and bus 113 or 213. No interlocks are provided, however, because the interconnected buses are not redundant. Since no crosstie current is assumed for battery loading, the associated Division is considered inoperable when crosstied. Administrative control must be provided for operation of these bus ties. Battery bus tie-closed alarms are provided in the control room by the annunciator.

During normal operation, the batteries are kept fully charged by the battery chargers. The voltage is raised periodically for equalization of the charge on the

individual battery cells. Readings are recorded for the battery voltage level during charge equalization.

Divisions

The d-c battery system is divided into three electrically and physically independent divisions as follows:

ENGINEERED SAFETY FEATURES EQUIPMENT

Unit No.	ESF Div. No.	125-V Batt. No.	125-V Pnl. No.	250-V Batt. No.	250-V Bus No.	250-V MCC No.	Diesel Gen. No.	4-kV Bus No.
1	1	1A	111Y	1	1	121Y	0	141Y
1	2	1B	112Y				1A	142Y
1	3	1C	113				1B	143
2	1	2A	211Y	2	2	221Y	0	241Y
2	2	2B	212Y				2A	242Y
2	3	2C	213				2B	243

The system design satisfies the single-failure criteria in that any one of the three 4160-volt ESF buses (141Y, 142Y, 143) on Unit 1 along with its control power can be lost and still provide operation of sufficient engineered safety features system auxiliaries to control the plant safely under all modes of operation.

Sources

The primary sources of d-c power for the system loads of each unit are a combination of the 250-Vdc battery chargers (ESF Division 1) and the 125-Vdc battery chargers (ESF Division 1, 2 and 3). Each battery charger is fed from a 480-volt ESF motor control center of the same ESF division and is sized to carry the following loads:

a. normal load on the associated d-c distribution panel, and

b. battery-charging load required to fully charge the battery following a discharge.

If the battery chargers are out of service, the secondary d-c power sources for the associated d-c system loads of each unit are the 250-volt and the 125-volt batteries themselves. The Division 1 and 2 batteries are sized to start and carry the

normal d-c loads plus all d-c loads required for safe shutdown and for switching operations required to limit the consequences of a design-basis event for a period of 4 hours following loss of all a-c sources. The Division 3 on-line battery charger will carry all nonaccident shutdown loads; the principal one being the starting load of the HPCS diesel. These primary and secondary sources (battery chargers and batteries) meet, for their size and instrumentation, the requirements of IEEE 308-1971. The chargers alone are capable of supplying station normal d-c steady-state requirements while restoring the batteries to full charge.

Operating Configurations

The 250-Vdc motor-control center (Division 1) and each of the 125-Vdc distribution panels (Divisions 1, 2, and 3) are normally fed from their primary source (charger) and their secondary source (battery) operating in parallel in a "float-charger" configuration. Loss of either source does not interrupt power flow to the bus. The battery system is provided with a recording ground - detection voltmeter and alarm (alarm at the main control room. Figure 8.3-9 shows the essential electrical connections for the 250-Vdc ESF Division 1 (Unit 1). Figures 8.3-10, 8.3-11, and 8.3-12 show the essential electrical connections for the 125-Vdc ESF Divisions 1, 2, and 3 respectively for Unit 1. These figures are directly analogous to the Unit 2 d-c system. Battery load requirements are given in Tables 8.3-11, 8.3-12, 8.3-13, and 8.3-14.

Batteries

The ampere-hour capacity of each battery is adequate to supply expected essential loads following station trip and loss of all a-c power without battery terminal voltage falling below 105-Vdc / 210 Vdc terminal voltage, the minimum discharge level.

The 8-hour, 77° F ampere-hour capacity to 105-Vdc / 210 Vdc terminal voltage for each battery is as follows:

a. Unit 1/2 250-volt battery, 1832 A-hr;

b. Unit 1/2, Division 1 125-volt battery, 1128 A-hr;

c. Unit 1/2, Division 2 125-volt battery, 1128 A-hr;

d. Division 3 125-volt battery, 308 A-hr.

The station batteries are designed to operate with the specified capacities in the worst expected temperature and humidity conditions in the battery room following a design-basis accident.

The batteries and the battery chargers of ESF Divisions 1, 2, and 3 are located outside the primary containment in areas where the environment is essentially normal following a design-basis accident. They are housed in a Safety Class 1 structure in separate battery rooms having concrete walls.

In addition to normally expected environmental conditions, Class 1E d-c cables or devices located inside the containment are designed to operate in the post-accident environment for the period of time during which they would be needed to limit the consequences of the accident. The batteries are designed to withstand the pressure, temperature, humidity, and radiation levels for the applicable design-basis accident for that period of time without loss of function.

Sufficient ventilation is provided in the battery rooms for the following purposes:

a. To purge the room of gaseous hydrogen liberated from the batteries at an air change rate of greater than 6 air changes per hour. This limits the hydrogen concentration to a level below 2% of total volume.

b. To limit each battery room temperature at 104° F maximum and maintain a minimum electrolyte temperature of 60°F for the 125 VDC batteries and 65°F for the 250 VDC batteries.

c. To maintain each battery room at normal plant pressure.

The conditions of the battery are monitored in accordance with IEEE 308-1974. Battery testing is performed in accordance with IEEE 450-1995 per Regulatory Guide 1.32 C.1.c.

The 125-Vdc and 250-Vdc control batteries, racks, chargers, distribution panels, and battery room ventilation equipment are classified as Seismic Category I.

The 125-volt and 250-volt batteries are housed in separately ventilated rooms and are provided with seismically qualified battery racks.

The ESF portion of the d-c equipment is installed in a Seismic Category I Structure.

The engineered safety feature portions of the 125-Vdc system and the 250-Vdc systems are classified as Class 1E.

Fire detectors and fire extinguishers are installed in the areas where the 125-volt and 250-volt batteries and distribution buses are installed.

8.3.2.2 Analysis

Each division of the Class 1E a-c power system is provided with control and d-c motive power from a corresponding division of the Class 1E d-c power system. The 480-Vac feed to each battery charger is supplied from an a-c source in the individual division to which the particular charger belongs. In this way, separation between the independent divisions is maintained, and the power provided to the chargers can be from either offsite or onsite sources.

Alarms are provided to monitor the status of the battery-charger supply. Such alarms include loss of a-c power to the charger, d-c output failure, low output voltage, high current output, battery ground, and breaker trip. Battery chargers are provided with disconnecting means, feedback protection and high d-c voltage shutdown. Each d-c subsystem has remote and local status monitoring instruments. Remote display instruments are located in the control room.

All the status-monitoring instruments for the Division 1, Division 2, and Division 3 125-Vdc power systems are mounted on the d-c distribution/instrumentation panels or battery charger of the respective divisions located outside the battery rooms. The status-monitoring instruments for the Division 1 250-Vdc power system are mounted on the respective battery charger panel located outside the battery room. All alarms are annunciated in the main control room. Periodic functional tests are performed to ensure the readiness of the system to deliver the required d-c power.

8.3.3 Fire Protection for Cable Systems

8.3.3.1 Cable Derating and Cable Tray Fill

Power cables are selected such that the cable insulation thermal rating is not exceeded. Cable ampacities are analyzed using a computerized cable engineering program to ensure that cables are applied within their thermal rating. Original construction design cable ampacities for LSCS were limited to the values shown in Tables 8.3-7 through 8.3-9. The values in these tables apply to cables that have some part of their length in solid bottom trays with derating factors applied for ambient, tray fill, tray covers, shields, and direct current service.

The thermal ampacity of power and control cables with no part of their length in solid-bottom trays conform to IPCEA P-46-426-1962 (AIEES-135-1), with appropriate derating factors applied for ambient, shields, and direct current service. Cables are classified as power (P), control (C), or instrumentation (K), as follows:

a. Power Cables

Power cables are defined as those cables which provide electrical energy for motive power or heating to all 6600-Vac, 4000-Vac, 460-Vac, 208-Vac, 250-Vdc, and 125-Vdc loads. Cables which transmit power from electrical energy sources to power distribution panels, regardless of voltage, are included in this

definition. Generally, all 8-kV and 4-kV cables and all 600-volt cables with #6 AWG and larger conductors are included in this category. Some 600-volt, #10 and #14 AWG conductor cables are also included in this category, e.g., power feeds to valve motor operators.

b. Control Cables

For purposes of this criterion, control cables are defined as those circuits up to and including 120-Vac and up to and including 125-Vdc between components responsible for the automatic or manual initiation of auxiliary electrical functions and the electrical indication of the state (position) of auxiliary components.

When applying these criteria, cables which supply electrical energy from distribution panels to 120-Vac, 125-Vdc, and 24-Vdc instrument, control, and alarm circuits are treated as control cables. Generally, all 600-volt cables with #10 and #14 AWG conductors, except those three conductor cables which are power cables, are included in this category. Some motor operated valves and the 480-volt feed for the standby gas treatment system stack monitoring subsystem have their power circuit categorized as control due to their small size, low current and/or intermittent use.

c. Instrumentation Cables

Instrumentation (signal) cables are defined as those cables conducting low-level instrumentation and control signals. These signals can be analog or digital. Typically, those cables which carry signals from thermocouples, resistance temperature detectors, transducers, neutron monitors, etc. to E/P converters, indicators, recorders, and computer input circuits which carry signals of less than 50 mA are included in this category. Generally, instrumentation cables are one of the following types:

1. #16 AWG, twisted, shielded conductor pairs;
2. #20 AWG, chromel-constantan conductor pairs; or
3. coaxial or triaxial.

The cable ampacities are based on an approximate 2-inch design depth of fill for 4-inch deep power cable trays and an approximate 3-inch design depth of fill for the 6-inch deep control and instrumentation trays. Design indexes are calculated for all cable pan routing points.

$$\text{Design Index} = \frac{\text{Sum of (Cable Diameters)}^2}{\text{Tray width x Design Depth of Fill}}$$

If the design index exceeds 1.25 for a power cable tray, that routing point will be analyzed by calculation to determine if thermal loading limitations have been exceeded. If the design index exceeds 1.4 for a power, control, or instrumentation cable tray that routing point will be analyzed by calculation to determine if static loading limitations have been exceeded.

8.3.3.2 Fire Detection and Protection in the Areas where Cables are Installed

Fire Detection

The fire-detection system utilizes ionization type fire detectors for detecting incipient fires and products of combustion in various plant zones. Each unit's fire detection system is divided into two groups as follows:

a. a first group which provides warning alarm only (warning zones), and

b. a second group which supplies warning and initiates the operation of a fire-protection system, depending on zone (protection zones).

Groups of fire detectors are installed in areas of high cable concentration, including the following:

a. control room;

b. auxiliary equipment room;

c. ESF electrical switchgear rooms (ESF Divisions 1, 2, and 3);

d. 250-volt 125-volt battery rooms;

e. reactor protection equipment area;

f. major switchgear rooms (four areas for each unit);

g. computer room;

h. radwaste control room;

i. lake screen house;

j. off-gas switchgear room;

k. concentrated cable areas in the following locations:

1. reactor building - elevations 740 feet, 673 feet 4 inches, 710 feet 6 inches, 694 feet 6 inches, 761 feet and 786 feet 6 inches.

2. auxiliary building - elevation 749 feet;

3. primary containment - elevations 740 feet,, 749 feet 1 inch, 761 feet and 777 feet 11 inches;

4. turbine building;

5. diesel generator building - elevations 674 feet and 736 feet 6 inches; and

l. river screen house (heat detectors).

The design and configuration of each area determine the number and actual location of fire detectors.

The fire detectors are installed in return air ducts where possible. Otherwise, they are placed as near as possible to the potential fire hazard. The sensitivity of each fire detector is individually adjustable and is set by the factory-trained technician at the time of installation.

The fire detectors alert the operators in the main control room through the main control board annunciator and a separate light indicating panel for fire-detection systems and sound an alarm locally upon detection of fire in any of the above mentioned areas.

The fire-detection systems are electrically supervised and energize alarms both in the auxiliary electric equipment room (AEER) and in the control room upon loss of supply voltage or similar failure.

Automatic Fire Protection for the Cable Spreading Room

The cable spreading rooms for LSCS are each equipped with automatic preaction deluge systems actuated by ionization detectors. Ionization smoke detectors are located in the ceilings. These detectors are sensitive enough to alarm at the very inception of a fire when combustion products are first being released. Actuation of one detector trips the deluge valve to charge the system with water.

Fusible link sprinkler heads are located adjacent to each cable tray. A heat source, such as from a fire, is then required for the sprinkler head to actuate and flood the tray. This system is also air supervised. Damage to the system or actuation of a fusible link sprinkler head actuates an alarm both locally and in the control room. If for some reason the ionization smoke detection system was not in service or failed to function, the heat of a fire would cause a supervisiory alarm, and the deluge valve could be tripped manually.

The system is electrically supervised and alarms both locally and in the control room upon any failure. If there is a fire and the detectors do not function for any reason, the melting of the fusible links energizes an alarm both in the AEER and in the control room by releasing the air pressure maintained in the dry pipe.

Fire hose stations and portable fire extinguishers are readily available to switchgear rooms.

8.3.3.3 Fire Barriers and Separation Between Redundant Cable Trays

For information on installation of fire barriers and separation between redundant cable trays, see Subsection 8.3.1.4.2.

8.3.3.4 Fire Stops

Fire stops are installed in the cable trays at all riser openings in floors. When it penetrates a floor, the tray section is completely enclosed for a distance of 6 feet above the floor surface.

Within the tray section, fire stops are provided that satisfy the fire-resistance requirements for the application.

In areas where pressure integrity between walls is required, a sleeve penetration filled with a nonflowing, fire-resistant material or other suitable fire stop is used. In other walls, cable tray penetrations utilize seals similar to risers.

All cables (Class 1E and non-Class 1E) are flame retardant. These cables have passed flame tests specified by IEEE 383.

8.3.3.5 Integrity of the Essential (ESF) Electrical Auxiliary Power and Controls

See Subsections 8.3.1.1.2 and 8.3.2.1.1. See also Tables 8.3-1, 8.3-11, 8.3-12, and 8.3-13 for separation of redundant ESF loads, which ensures integrity of ESF equipment during fires or other accident conditions.

To maintain the integrity of ESF equipment needed during fires for safe shutdown and for fire fighting, the following provisions are made:

1. Physical separation is provided between redundant divisions of electrical auxiliary power equipment, with fireproof walls separating redundant equipment.

2. ESF equipment is located only in protected zones having a low probability of being subject to damage from missiles or fire.

3. Independent sources of power and controls are provided for each redundant ESF division.

4. Fire barriers are used wherever there is a possibility of fires occurring.

5. ESF equipment is installed in Seismic Category I buildings for protection against earthquakes (which can cause fires).

8.3.3.6 Provisions for Protection of ESF Auxiliary Power from Effects of Fire-Suppressing Agents

1. The cabling that is installed in the cable spreading room is waterproof and is not subjected to water damage. There are only two penetrations through the floor of the cable spreading room. These penetrations have been specially curbed. Floor drains are provided, and there is no problem of water leakage into the auxiliary equipment room.

2. Use of fireproof walls and barriers for separating redundant ESF equipment prevents spread of fire-suppressing agents such as water, CO_2, as fire-extinguishing chemicals.

3. See Subsecton 8.3.3.3 for description of fire barriers and separation between redundant ESF cable trays.

TABLE 8.3-1
(SHEET 1 OF 7)

LOADING ON 4160-VOLT BUSES**

EQUIPMENT	UNIT #1 LOCA	DELAY TIME AFTER ESF BUS IS ENERGIZED (SEC)[1]	UNIT #2 SS	NUMBER INSTALLED UNIT 1	NUMBER INSTALLED UNIT 2	REQUIRED BHP EACH	MINIMUM IMMEDIATE REQUIREMENTS UNIT 1	MINIMUM IMMEDIATE REQUIREMENTS UNIT 2	ESF BUSES (Note 9) BUS 141Y	UNIT 1 BUS 142Y	BUS 143	BUS 241Y	UNIT 2 BUS 242Y	BUS 243
HPCS pump	X*	0	-	1	1	3050	1	0	----	----	3050	----	----	----
LPCS pump	X	0	-	1	1	1490	1	0	1490	----	----	----	----	----
RHR pump 1C	X	0	X	1	1	765	1	0	----	765	----	----	----	----
RHR pumps 1A & 1B	XX	5	XX	2	2	765	2	1	765	765	----	----	765	----
RHR service water pump	X<>	-	X<>	4	4	200	2	2	400	400	----	----	400	----
Diesel-generator auxiliaries:														
(a) Water pumps	X	0	X	3	2	125/75/77.5	3	2	125	75	77.5	----	75	77.5
(b) Starting air comp.	XXXX	0	XXXX	4	4	12.2/10.7/7.5	4	3	12.2	22.9	7.5	----	22.9	7.5
(c) DG rm. exh. fan	X	0	X	3	2	40/30.2	3	2	40	40	30.2	----	40	30.2
(d) Fuel oil rm. fan	X	0	X	3	2	3	3	2	3	3	3	----	3	3
(e) Fuel oil trans. pump	XXXX	0	XXXX	3	2	5	3	2	5	5	5	----	5	5
(f) Lube oil soak back pump	X	-	X	2	1	0.75	2	1	0.75	0.75	----	----	0.75	----
(g) Engine oil circ pump	X	-	X	2	1	1	2	1	1	1	----	----	1	----

The 250 V Div. 1 and 125 V Div 1 battery charger data above are revised for record.

TABLE 8.3-1
(SHEET 2 OF 7)

LOADING ON 4160-VOLT BUSES**

EQUIPMENT	UNIT #1 LOCA	DELAY TIME AFTER ESF BUS IS ENERGIZED (SEC)[1]	UNIT #2 SS	NUMBER INSTALLED UNIT 1	NUMBER INSTALLED UNIT 2	REQUIRED BHP EACH	MINIMUM IMMEDIATE REQUIREMENTS UNIT 1	MINIMUM IMMEDIATE REQUIREMENTS UNIT 2	ESF BUSES (Note 9) BUS 141Y	UNIT 1 BUS 142Y	BUS 143	BUS 241Y	UNIT 2 BUS 242Y	BUS 243
Battery charger - 250 Vdc	X	0	-	1	1	89.8kVA	1	0	102.3	----	----	----	----	----
Battery charger - 125 Vdc	X	0	X	3	3	44.1kVA	2	1	50.3	50.3	----	----	50.3	----
Essential lighting	X	0	X	3	3	27.3kW/ 46kW/ 5kVA/ 22.7kW	3	2	36.6	61.7	6	----	30.5	6
Computer power supply	X	0	X	1 (Note 4)	1 (Note 4)	25kVA	1	0	57	----	----	----	----	----
Aux. equipment room:														
Sup. sys. refrig. comp.	XXXXXX	-	-	1	1	115.1	1	1	----	115.1	----	----	115.1	----
Air cooled cond. fan	XX	Note 5	-	1	1	100	1	1	----	100	----	----	100	----
Supply fan	XX	Note 5	-	1	1	78/76	1	1	----	78	----	----	76	----
Return fan	XX	Note 5	-	1	1	50/46	1	1	----	50	----	----	46	----
Cont. rm. refrig. comp.	XXXXXX	-	-	1	1	90.7	1	1	----	90.7	----	----	90.7	----
Cont. rm. air-cooled cond. fan	XX	Note 5	-	1	1	85.2/71	1	1	----	85.2	----	----	71	----
Hydrogen recombiner power cabinet	XXX	-	-	1	1	100kVA	1	1	---	134	---	---	114	---
Post LOCA containment monitor sample panel	X	-	-	2	2	1	2	0	1	1	---	---	---	---

The 250 V Div. 1 and 125 V Div 1 battery charger data above are revised for record.

TABLE 8.3-1
(SHEET 3 OF 7)

LOADING ON 4160-VOLT BUSES**

Equipment	Unit #1 LOCA	Delay Time After ESF Bus Is Energized (Sec)[1]	Unit #2 SS	Number Installed		Required BHP Each	Minimum Immediate Requirements		ESF Buses (Note 9)					
				Unit 1	Unit 2		Unit 1	Unit 2	Unit 1			Unit 2		
									BUS 141Y	BUS 142Y	BUS 143	BUS 241Y	BUS 242Y	BUS 243
SLCS tank heater	XXXX	-	XXXX	1	1	10kW	1	0	13	----	----	----	----	----
SLCS pump	XXX	-	XXX	2	2	40kW	0	0	----	----	----	----	----	----
SLCS mixing heater	XXX	-	XXX	1	1	40kW	0	1	----	----	----	----	54	----
Battery room exhaust fans	X	-	X	6	6	1	6	4	2	3	1	----	3	1
Standby gas treatment blower	X	-	X	1	1	20	1	1	----	20	----	----	20	----
Standby gas elect. duct heater	XX	Note 5	XX	1	1	23	1	1	----	30.8	----	----	30.8	----
Standby gas cooling fan	XXXX	-	XXXX	1	1	1.5	1	0	----	1.5	----	----	----	----
RX protection MG set	XXX	-	XXX	2	2	25	0	1	----	----	----	----	25	----
Primary containment vent. sup. fan	XXX	-	XXX	2	2	100	0	1	----	----	----	----	100	----
RX protection MG room supply fan	X	-	X	1	1	20	1	1	----	20	----	----	20	----
Control room supply fan	XX	Note 5	-	1	1	50	1	1	----	50	----	----	50	----
Control room return fan	XX	Note 5	-	1	1	25	1	1	----	25	----	----	25	----
Control room emergency makeup fan	XX	Note 5	-	1	1	15	1	1	----	15	----	----	15	----
Fuel pool emergency makeup pump	XXX	-	XXX	2	2	75	0	0	----	----	----	----	----	----

The 250 V Div. 1 and 125 V Div 1 battery charger data above are revised for record.

TABLE 8.3-1
(SHEET 4 OF 7)

Equipment	Unit #1 LOCA	Delay Time After ESF Bus Is Energized (Sec)[1]	Unit #2 SS	Number Installed Unit 1	Number Installed Unit 2	Required BHP Each	Minimum Immediate Requirements Unit 1	Minimum Immediate Requirements Unit 2	ESF Buses (Note 9) Unit 1 BUS 141Y	Unit 1 BUS 142Y	Unit 1 BUS 143	Unit 2 BUS 241Y	Unit 2 BUS 242Y	Unit 2 BUS 243
Cleanup recirc. pump	XXX	-	XXX	2 (Note 2)	2 (Note 2)	55.3	0	1	----	----	----	----	55.3	----
Switchgear heat removal fan	X	-	X	2	2	25	2	1	25	25	----	----	25	----
LPCS & RCIC pumps cub. cooler fan	XXXX	-	XXXX	1	1	25	1	0	25	----	----	----	----	----
RHR pump cubicle cooler fan	XXXX	-	XXXX	2	2	20/25	2	1	20	25	----	----	25	----
LPCS & RHR "A" water leg pump	X	-	X	1	1	7.5	1	0	7.5	----	----	----	----	----
RCIC water leg pump	X	-	X	1	1	7.5	1	0	7.5	----	----	----	----	----
RHR B/C water leg pump	X	-	X	1	1	7.5	1	1	----	7.5	----	----	7.5	----
RHR service water pump cub. fan	XXXX	-	XXXX	2	2	5	2	1	5	5	----	----	5	----
Annunciator supply	X	-	X	2	2	5kVA	2	1	6	6	----	----	6	----
120/208-V dist. pnl. on MCC	X	-	X	9	9	10.5kVA/ 15kVA	8	5	48	68	----	----	85.5	----
Primary containment water chiller	XXX	-	XXX	2	2	600kW	0	0	----	----	----	----	----	----
Control rod drive feed pump	XXX	-	XXX	2	2	300	0	0	----	----	----	----	----	----
HPCS water leg pump	X	-	X	1	1	7.5	1	1	----	----	7.5	----	----	7.5
HPCS - pump cubicle cooler fan	XXXX	-	XXXX	1	1	17	1	0	----	----	17	----	----	17

TABLE 8.3-1
(SHEET 5 OF 7)

EQUIPMENT	UNIT #1 LOCA	DELAY TIME AFTER ESF BUS IS ENERGIZED (SEC)[1]	UNIT #2 SS	NUMBER INSTALLED UNIT 1	NUMBER INSTALLED UNIT 2	REQUIRED BHP EACH	MINIMUM IMMEDIATE REQUIREMENTS UNIT 1	MINIMUM IMMEDIATE REQUIREMENTS UNIT 2	ESF BUSES (Note 9) BUS 141Y	UNIT 1 BUS 142Y	BUS 143	BUS 241Y	UNIT 2 BUS 242Y	BUS 243
Control room emergency makeup air heaters	XX	Note 5	-	1	1	20kW	1	1	----	27	----	----	27	----
Primary containment water chiller pump	XXX	-	XXX	2 (Note 2)	2 (Note 2)	50	0	0	----	----	----	----	----	----
Carbon dioxide refrig. unit	XXXX	-	XXXX	1	0	3	1	0	3	----	----	----	----	----
Laboratory receptacles transformer	XXXXXX	-	XXXXXX	3	0	15.6/ 12kW	3	0	Note 7	Note 7	----	----	----	----
Fire evacuation sirens transformer	X	-	X	1	1	7.5kVA	1	1	----	10	----	----	10	----
HPCS switchgear room supply fan	X	-	X	1	1	13	1	1	----	----	13	----	----	13
HPCS switchgear room exh. fan	X	-	X	1	1	13	1	1	----	----	13	----	----	13
HPCS diesel auxiliaries(Note 6)	XXXX	-	XXXX	1	1	11kW	1	1	----	----	14.7	----	----	14.7
Turbine turning gear	XXXXX	-	XXXXX	1 (Note 2)	1 (Note 2)	60	0	1	----	----	----	----	60	----
Turbine turning gear oil pump	XXXXX	-	XXXXX	1 (Note 2)	1 (Note 2)	50	0	1	----	----	----	----	50	----
Turbine bearing lift pumps	XXXXX	-	XXXXX	8 (Note 2)	8 (Note 2)	5	0	8	----	----	----	----	40	----
Reactor feed pump turb. turbine gear	XXXXX	-	XXXXX	2 (Note 2)	2 (Note 2)	1.5	0	2	----	----	----	----	3	----
Reactor feed pump turb. aux. oil pump	XXXXX	-	XXXXX	1 (Note 2)	1 (Note 2)	2	0	1	----	----	----	----	2	----

TABLE 8.3-1
(SHEET 6 OF 7)

Equipment	Unit #1 LOCA	Delay Time After ESF Bus Is Energized (Sec)[1]	Unit #2 SS	Number Installed Unit 1	Number Installed Unit 2	Required BHP Each	Minimum Immediate Requirements Unit 1	Minimum Immediate Requirements Unit 2	ESF Buses (Note 9) Unit 1 BUS 141Y	Unit 1 BUS 142Y	Unit 1 BUS 143	Unit 2 BUS 241Y	Unit 2 BUS 242Y	Unit 2 BUS 243
Generator main seal oil pump	XXXXX	-	XXXXX	1 (Note 2)	1 (Note 2)	20	0	1	----	----	----	----	20	----
Generator recirc. seal oil pump	XXXXX	-	XXXXX	1 (Note 2)	1 (Note 2)	7.5	0	1	----	----	----	----	7.5	----
Generator seal oil vac. pump	XXXXX	-	XXXXX	1 (Note 2)	1 (Note 2)	2	0	1	----	----	----	----	2	----
Reactor Bldg. closed cooling water pump	XXX	-	XXX	2 (Note 2)	2 (Note 2)	150	0	0	----	----	----	----	----	----

* Key to symbols used in this table:

X	Loads are energized immediately upon restoration of bus voltage.	Total Coincidental BHP on Each Bus	3251	3182	3244	----	3354	195
XX	Loads are applied automatically in sequence listed above.	Total Motor Output kW = (.746) (BHP)	2425	2374	2420	----	2502	146
XXX	Loads are applied manually by operator as required within diesel-generator rating.	# Total Motor Input kW Based on actual efficiencies for individual loads and includes electrical losses.	2594.1	2580.3	2587	----	2717	166
XXXX	Loads cycle automatically, as required.	Diesel-Generator Rating (kW) (8760-hour maintenance interval)	2600	2600	2600	----	2600	2600
XXXXX	Bus must be manually reenergized by operator before loads can automatically start.	Diesel-Generator Rating-kVA @ 80% PF	3250	3250	3250	----	3250	3250
XXXXXX	Loads must be manually reset locally upon restoration of bus voltage.	Diesel-Generator Rating (kW) (2000-hour maintenance Interval)	2860	2860	2860	----	2860	2860
X<>	Manually started when required.							

TABLE 8.3-1
(SHEET 7 OF 7)

**Assumptions:

A. Total loss of plant normal ac auxiliary power
B. Unit 1 in LOCA condition (Note 8)
C. Unit 2 in hot shutdown condition
D. Five diesel-generator sets start
E. Intermittent loads expected to operate for very short periods of time, such as motor-operated valves and sump pumps, are not included in the tabulation since inherent conservatism already contained in the tabulated values more than accounts for these loads.

Notes:

[1]Delay times may exceed those indicated by 2 seconds except for RHR pumps 1A and 1B. The delay time for RHR pumps 1A and 1B may exceed that indicated by 1 second.

[2]Loads have access to ESF buses (manual)

[4]Computer power supplies can be powered from either unit

[5]Delay time is dependent on system component operating times

[6]The following loads are fed from a common source of power: starting air compressor, air compressor dryer, lube oil soak back pump, engine oil circulating pump and 125 Vdc battery charger.

[7]Each laboratory receptacle circuit powered by Regular Lighting Cabinets 27A, 27B and 28 must be individually reset prior to use after a loss of power. The use of these receptacle circuits is expected to be limited after a LOOP/LOCA event and considered intermittent and therefore are not included in the EDG loading Tabulation.

[8]A detailed analysis was completed for the condition where Unit 2 is in LOCA and Unit 1 is in Hot shutdown, coincident with a Loss of Offsite Power (LOOP). The analysis showed minor differences in the ESF bus electrical loadings between Units 1 and 2. However, these differences were a very small percentage of the diesel generator continuous rating, and in all cases the total electrical loading on any given ESF bus never exceeded the continuous rating of the applicable diesel generator.

[9]The numerical electric loading values in this Table are historical. Refer to the most recent version of the DG Loading Calculations for the Current Load values.

TABLE 8.3-2
(SHEET 1 of 4)

SUMMARY OF RELAY PROTECTION FOR ESF 4160-VOLT EQUIPMENT

ITEM NO.	EQUIPMENT	RELAYS		RELAY FUNCTION	RELAY FUNCTION
		DEVICE	TYPE		
1a	Bus Tie ACB1415 (1425)	1451	CO-6	Phase overcurrent	Trip: ACB1415 (1425) (BusTie) & Alarm Block Reclosure: ACB1411 (1421) (Tr. 141 feed); ACB1412 (1422) (Tr. 142 feed); ACB1415 (1425) (bus tie)
1b	Bus Tie ACB1415 (1425)	1415N	CO-6	Ground overcurrent	(Same as in Item 1a)
2a	Bus 141Y (142Y)	1427	ITE-27	Bus undervoltage	Shed loads on bus 141Y (142Y) Trip ACB1412 (1422) (Tr. 142 feed) Trip ACB1414 (1424) (tie to Unit 2) Trip ACB1415 (1425) (bus tie) Start D.G. "0" (D.G. 1A) & Alarm Interlock Auto Close ACB1413 (1423)
2b	Bus 141Y (142Y)	1427	ITE-27N	Degraded Voltage	Trip ACB1412(1422)(Tr. 142 feed) Trip ACB1414(1424)(Tie to Unit 2) Trip ACB1415(1415)(Bus tie) Trip ACB2413(DG-0 feed to 241Y) concurrent with LOCA Start DG-0 (DG-1A) Prevent Start of LPCS and A RHR Pumps (B and C RHR Pumps) Alarm
3a	D.G. 0 (D.G. 1A)	1427	ITE-59N	Generator output voltage	Alarm Interlock Close ACB1413 (1423)
3b	D.G. 0 (D.G. 1A)	1459	NOTE 1	Generator* neutral ground	Alarm, Trip & block reclosure ACB1413 (1423) Stop DG-0 (1A)
3c	D.G. 0 (D.G. 1A)	1487	NOTE 1	Generator differential	Trip & block reclosure ACB1413 (1423) (D.G. feed) Stop D.G. 0 (D.G. 1A) & Alarm
3d	D.G. 0 (D.G. 1A)	1432	NOTE 1	Reverse* power	Same as in Item 3c
3e	D.G. 0 (D.G. 1A)	1451	1JCV51	Phase* overcurrent	Same as in Item 3c

* Blocked by Safeguard Actuation Signal
Note 1:See the LaSalle controlled computer database for Relay Type

TABLE 8.3-2
(SHEET 2 of 4)

SUMMARY OF RELAY PROTECTION FOR ESF 4160-VOLT EQUIPMENT

ITEM NO.	EQUIPMENT	RELAYS		RELAY FUNCTION	RELAY FUNCTION
		DEVICE	TYPE		
3f	D.G. 0 (D.G. 1A)	1440	CEH51A	Loss of* field	Trip if ACB1413 (1423) initially closed, then same as Item 3c
3g	D.G. 0 (D.G. 1A)	1481	NOTE 1	Underfrequency*	Same as in Item 3f
3h	D.G.-0, 1A	1451	NOTE 1	Phase overcurrent	Alarm
3i	D.G.-1B	1432	NOTE 1	Reverse power*	Trip ACB1433 (D.G. Feed) Stop D.G.-1B
	D.G.-2B	2432	NOTE 1	Reverse power*	Trip ACB2433 (D.G. Feed), if 2433 initially closed Stop D.G. 2B
3j	D.G.-1B	1440	CEH11A	Loss of field*	Same as 3i with ACB1433 closed.
3k	D.G.-1B	1451	IJCV51	Phase overcurrent*	Note 2 Alarm
3l	D.G.-1B	1459	IAV51K	Generator Neutral Ground	Alarm
3m	D.G.-1B	1487	PVD	Generator differential	Trip ACB1433 Stop D.G.-1B
3n	D.G.-1B	1451	IAC51	Phase Overcurrent	Note 3 Alarm

Note 1: See Section B of Q-Listthe LaSalle controlled computer database for Relay Type

Note 2: Overcurrent with voltage restraint protection for the 1B HPCS Diesel Generator and bus 143 is provided by relays 1451V-DG1B (K35A, K35B, and K35C). To ensure proper relay coordination, the overcurrent with voltage restraint protection logic is arranged so that an overcurrent condition will result in tripping of the preferred source supply from the Station Auxiliary Transformer (i.e., ACB 1432), and then after an approximate 1/2 second time delay, the diesel output breaker (i.e., ACB 1433) will also trip if the fault has not cleared. During a loss of coolant accident condition, this protective feature is blocked from tripping the diesel output breaker.

Note 3: Overcurrent protection for the 1B HPCS Diesel Generator and bus 143 is provided by relays 1451-DG1B (K33A, K33B). The overcurrent protection logic is arranged so that if the diesel is operating in parallel with the Station Auxiliary Transformer (i.e., ACB 1432 and ACB 1433 are closed), an overcurrent condition will result in tripping of the preferred source supply from the SAT (i.e., ACB 1432).

* Blocked by Safeguard Actuation Signal

TABLE 8.3-2
(SHEET 3 of 4)

SUMMARY OF RELAY PROTECTION FOR ESF 4160-VOLT EQUIPMENT

ITEM NO.	EQUIPMENT	RELAYS		RELAY FUNCTION	RELAY FUNCTION
		DEVICE	TYPE		
4a	ACB1412 (1422) (1432) Tr. 142 feed to Bus 141Y (142Y) (143)	1451	Co-6 (Co-6) (IAC-51)	Phase overcurrent	Trip ACB1415 (1425)(bus tie) Trip ACB1413 (1423) (1433) (DG feed) Trip ACB1412 (1422)(1432) (Tr. 142 feed) Trip ACB1414 (1424) (cross-tie feed to Unit 2) & Alarm Block Reclosure: ACB1413 (1423) (1433) (DG feed) Block Reclosure: ACB1412 (14222) (1432) (Tr. 142 feed) Block Reclosure: ACB1414 (1424) (cross-tie to Unit 2)
4b	ACB1412 (1422)	1451N	Co-6 (Co-6) (IAC-51)	Ground overcurrent	Same as in Item 4a
4c	ACB1412 (1422) (1432) Tr. 142 feed to Bus 141Y (142Y) 143	1887T 142	HU-1	Transformer differential	Trip ACB1412 (1422) (1432) (Tr. 142 feed) Block Reclosure: ACB1412 (1422) (1432)
4d	ACB1412 (1422) (1432) Tr. 142 feed to Bus 141Y (142Y)	1427	ITE-27	Tr. 142 under voltage ("Y" winding)	Block Reclosure: ACB1412 (1422) (1432) Trip ACB1412 (1422)
5a	345kV Bus 13	1887	PVD	Bus differenital	Trip ACB1412 (1422) (1432) (Tr. 142 feed)
5b	345kV Bus 13	1850 LBB-1	S1/ARS/ TD5	Backup trip (OCB 1-13)	Trip ACB1412 (1422) (1432) (Tr. 142 feed)
5c	345kV Bus 13	1850 LBB-2	S1/ARS/ TD5	Backup trip (OCB 11-13)	Trip ACB1412 (1422) (1432) (Tr. 142 feed)
6a	Bus 143	1427	NGV13A	Bus undervoltage	Trip ACB1432 (Tr. 142 feed) Start D.G. 1B Intlck. close ACB1433 (D.G. 1B feed)
6b	Bus 143	1427	ITE-27N	Degraded Voltage	Trip ACB1432(Tr. 142 feed) Alarm
7a	ACB1414 (1424) Cross-tie to Unit 2	1487BT	IJD	Bus tie diferential	Trip ACB1414 (2414) (tie to bus 241Y) Trip ACB1424 (2424) (tie to bus 242Y) Block Reclosure: ACB1414 (2414) Block Reclosure: ACB1424 (2424)

TABLE 8.3-2
(SHEET 4 of 4)

SUMMARY OF RELAY PROTECTION FOR ESF 4160-VOLT EQUIPMENT

ITEM NO.	EQUIPMENT	RELAYS		RELAY FUNCTION	RELAY FUNCTION
		DEVICE	TYPE		
7b	ACB2414 (2424) Cross-tie to Unit 1	2451BT	CO-9	Phase overcurrent	Trip ACB1414 (2414) (tie to bus 241Y) Trip ACB 1424 (2424) (tie to bus 242Y) Block Reclosure: ACB1414 (2414) Block Reclosure: ACB1424 (2424)
8a	Feeds to motors: Buses 141Y (142Y) (143)	1450/1451	CO-5	Phase time overcurrent with inst. Element	Trip breaker supplying motor
8b	Feeds to motors: Buses 141Y (142Y)	1451N	GR-5	Ground overcurrent instantaneous with time delay	Trip breaker supplying motor
8c	Feeds to motors: Bus 143	1450/1451	IAC66	Phase time overcurrent with inst. element	Trip breaker supplying motor
8d	Feeds to motors: Bus 143	1451N	PJC	Ground overcurrent instantaneous	Alarm
9a	Feeds to 480-volt transformers Buses 141Y & 142Y	1450/1451	CO-4	Phase time overcurrent with inst. element	Trip 4160-volt and 480-volt breakers on transformer
9b	Feeds to 480-volt transformers Buses 141Y & 142Y	1451N	GR-5	Ground overcurrent instantaneous with time delay	Trip 4160-volt and 480-volt breakers on transformer
9c	(480-volt neutral) (on transformer) Buses 141Y & 142Y	1350N	IAC-60B	Ground time overcurrent with instantaneous element	Trip 4160-volt and 480-volt breakers on transformer
9d	Feeds to 480-volt transformers: Bus 143	1450/1451	IAC51	Phase tme overcurrent with inst. element	Trip 4160-volt breaker supplying transformer
9e	Feeds to 480volt transformers: Bus 143	1450N	PJC	Ground overcurrent instantaneous	Alarm
9f	480-volt neutral on transformer: Bus 143	1359N	IAV	Ground overcurrent instantaneous	Alarm

NOTE 1: SEE THE LASALLE CONTROLLED COMPUTER DATABASE FOR RELAY TYPE.

TABLE 8.3-3

DIESEL-GENERATOR RATINGS

ITEM	DIESEL GENERATOR O (DIVISION 1)	DIESEL GENERATORS 1A AND 2A (DIVISION 2)	DIESEL GENERATORS 1B AND 2B (DIVISION 3)
Continuous rating, kW (8760-hour maintenance interval)	2600	2600	2600
2000-hour rating, kW (2000-hour maintenance interval)	2860	2860	2860
7-day rating, kW (7-day maintenance interval)	2987	2987	2987
30-minute rating, kW (30-minute maintenance interval)	3040	3040	3040
2-hour 10% overload, out of each 24 hours	2860	2860	2860

TABLE 8.3-4

TABULATION OF DIESEL-GENERATOR

PROTECTIVE AND SUPERVISORY FUNCTIONS

TROUBLE EVENT	FUNCTION FOR TESTING (MANUAL START)	FUNCTION FOR EMERGENCY (AUTOMATIC START) OPERATION DUE TO LOSS OF ALL OFFSITE POWER (LOOP)	FUNCTION FOR EMERGENCY (AUTOMATIC START) OPERATION DUE TO ACCIDENT (LOCA)
Overspeed	Alarm, trip	Alarm, trip	Alarm, trip
Loss of control power	Alarm	Alarm	Alarm
Low lube oil pressure	Alarm, trip	Alarm, trip	Alarm
High jacket coolant temperature	Alarm, trip	Alarm, trip	Alarm
Generator reverse power	Alarm**, trip	Alarm**, trip	Alarm**
Generator internal fault (differential)	Alarm**, trip	Alarm**, trip	Alarm**, trip
Generator overcurrent (voltage restrained)	Alarm, trip	Alarm, trip	Alarm
Generator overcurrent	Alarm, trip ACB1432*	Alarm, trip ACB1432*	Alarm, trip ACB1432*
Generator loss of field	Alarm, trip	Alarm, trip	Alarm
Generator Neutral Ground	Alarm, trip**	Alarm, trip**	Alarm
Generator Under Frequency**	Alarm, trip	Alarm, trip	Alarm
Generator Under Voltage**	Alarm	Alarm	Alarm

* On Diesel Generators 1B and 2B onlu.

** On Diesel Generators 0, 1A and 2A only.

TABLE 8.3-5

CABLE TRAY SEGREGATION CODES*

	DIVISION 1		DIVISION 2		DIVISION 3		BOP	
CATEGORY TYPE	TRAY CODE	PERMISSIBLE CABLE CODES	TRAY CODE	PERMISSIBLE CABLE CODES	TRAY CODE	PERMISSIBLE CABLE CODES	TRAY CODE	PERMISSIBLE CABLE CODES
Power (P)	1YP	1YP, 11P	1BP	1BP, 12P	1GP	1GP, 13P	1WP	1WP
Control (C)	1YC	1YC, 11C	1BC	1BC, 12C	1GC	1GC, 13C	1WC	1WC
Instrument (K)	1YK	1YK, 11K	1BK	1BK, 12K	1GK	1GK, 13K	1WK	1WK

* These codes apply to Unit 1. For Unit 2 codes, replace the first digit with the numeral "2" (2YP, 2YC, 2YK, etc.)

TABLE 8.3-6

CABLE SEGREGATION CODES* (NON-RPS CABLES)

ESF DIV.	COLOR CODE	POWER	CONTROL	INSTRUMENTATION
1	Yellow	1YP	1YC	1YK
2	Blue	1BP	1BC	1BK
3	Green	1GP	1GC	1GK
NSR	White	1WP	1WC	1WK
NSR in ESF 1	Yellow on white	11P	11C	11K
NSR in ESF 2	Blue on white	12P	12C	12K
NSR in ESF 3	Green on white	13P	13C	13K

(RPS CABLES)

RPS DIV.	COLOR CODE	POWER	CONTROL	INSTRUMENTATION
A1	Black on orange**	-	A1C	NAK
A2	Black on orange**	-	A2C	NCK
B1	Black on orange**	-	B1C	NBK
B2	Black on orange**	-	B2C	NDK
G1	Black on orange**	-	G1C	-
G2	Black on orange**	-	G2C	-
G3	Black on orange**	-	G3C	-
G4	Black on orange**	-	G4C	-

* These codes apply to Unit 1. For Unit 2 codes, replace the first digit with the numeral "2" (2YP, 2YC, 2YK, etc.)

Black characters, denoting RPS Division, on an orange field.

N - Neutron monitoring cable.

G - Scram solenoid cables.

TABLE 8.3-7

CABLE AMPACITIES - 8-kV CABLES

1/C CABLE - KERITE

SIZE	OUTER DIAMETER (in.)		AMPACITIES*		
				KERITE	
	IPCEA STANDARD	KERITE	IPCEA STANDARD	40° C AMBIENT	50° C AMBIENT
#750 MCM	1.39	1.867	495	664	598

3/C CABLE - KERITE

SIZE	OUTER DIAMETER (in.)		AMPACITIES*		
				KERITE	
	IPCEA STANDARD	KERITE	IPCEA STANDARD	40° C AMBIENT	50° C AMBIENT
#750 MCM	3.00	4.041	582	582	524
#500 MCM	2.60	3.508	443	462	416
#4/0 AWG	1.99	2.817	221	273	246
#1/0 AWG	1.56	2.440	122	178	160

* Based on maximum pan fill of 2 inches

TABLE 8.3-8

CABLE AMPACITIES - 5-kV CABLES

1/C CABLE*

SIZE	OUTER DIAMETER (in.)	AMPACITIES**

3/C CABLE

SIZE	OUTER DIAMETER (in.)		AMPACITIES**		
				KERITE	
	IPCEA STANDARD	KERITE	IPCEA STANDARD	40° C AMBIENT	50° C AMBIENT
#2	1.36	1.84	84	113	101
#1/0	1.54	2.08	120	162	145
#250 MCM	2.16	2.70	259	284	256
#500 MCM	2.60	2.92	443	462	416

* No 5-kV 1/C Cables are used
** Based on maximum pan fill of 2 inches

TABLE 8.3-9

CABLE AMPACITIES - 600-VOLT CABLES

1/C CABLE

SIZE	OUTER DIAMETER (in.)		AMPACITIES*		
				OKONITE	
	IPCEA STANDARD	OKONITE	IPCEA STANDARD	40° C AMBIENT	50° C AMBIENT
#14	0.17	0.172	5	5	4.5
#10	0.21	0.215	9	9	8
#6	0.34	0.342	23	23	20
#2	0.45	0.448	48	48	43
#1/0	0.58	0.581	78	78	70
#4/0	0.74	0.735	142	142	127
#250 MCM	0.85	-	176	-	-
#350 MCM	0.96	0.950	235	232	208
#500 MCM	1.09	1.081	320	317	285
#750 MCM	1.31	1.294	467	461	414
#1000 MCM	1.47	1.447	598	588	529
#1500 MCM	--	1.820	--	--	--

3/C CABLE

SIZE	OUTER DIAMETER (in.)		AMPACITIES*		
				OKONITE	
	IPCEA STANDARD	OKONITE	IPCEA STANDARD	40° C AMBIENT	50° C AMBIENT
#14	0.45	0.487	7	7.5	6.7
#10	0.57	0.611	14	15	13.5
#6	0.90	0.928	35	36	32
#2	1.13	1.157	70	71	64
#1/0	1.42	1.455	111	113	101
#4/0	1.82	1.851	202	205	184
#350 MCM	2.29	2.319	315	315	284
#500 MCM	2.59	2.602	390	390	351

* Based on maximum pan fill of 2 inches

TABLE 8.3-10

CABLE INSULATION

VOLT CLASS	APPLICATION	MANUFACTURER	INSULATION TYPE
5 kV	Power	Kerite	HTK (High Temp.) N98
600 V	Power and Control	Okonite	Okonite (EPR Base 1)
1000-600	Instrument	Raychem	Flamtrol (Radiation Cross-Linked Polyolefin)
600-300	Instrument	Samuel Moore	EPDM (rubber based compound
600	Instrument	Cerro	Ethylene Propylene Rubber

TABLE 8.3-11
(SHEET 1 OF 2)

250 - VOLT BATTERY 1 (ESF DIVISION 1) LOAD REQUIREMENTS
AMPERAGE REQUIREMENTS PER TIME INTERVAL AFTER A-C POWER LOSS
UNIT 1 - BATTERY 1DC01E LOAD (AMPERES)

(Note): The numerical electrical loading values and interim time frames in this table are historical. Refer to the most recent revision of the DC battery sizing calculation for the current load profile.

LOAD NAME	RATING HP(KVA)	0-1 MIN	1-2 MIN	2-30 MIN	30-45 MIN	45-170 MIN	170-240 MIN
1EBOP (Load 1)	40.000	0.00	729.00	138.00	138.00	138.00	138.00
1EBOP (Load 2)	------	2.00	2.00	2.00	2.00	2.00	2.00
GEN H2 1ES0P	15.000	120.00	32.10	32.10	32.10	32.10	32.10
UPS 1IP01E	(25.00)	100.00	100.00	100.00	0.00	0.00	0.00
RCIC BAR CD VAC PUMP	3.000	22.40	14.90	14.90	14.90	14.90	14.90
RCIC BAR CD VC TK PU	3.000	37.00	11.00	11.00	11.00	11.00	11.00
RCIC VALVE 1E51-F080	0.360	10.10	0.10	0.10	0.10	0.10	0.10
RCIC VALVE 1E51-F045	1.800	51.10	0.10	0.10	0.10	0.10	0.10
RCIC VALVE 1E51-F010	0.361	11.80	0.10	0.10	0.10	0.10	0.10
RCIC VALVE 1E51-F013	4.180	105.10	0.10	0.10	0.10	0.10	0.10
RCIC VALVE 1E51-F022(1)	0.360	10.10	6.80	0.00	0.00	0.00	0.00
RCIC VALVE 1E51-F022(2)	0.100	0.10	0.10	0.10	0.10	0.10	0.10
RCIC VALVE 1E51-F046	0.360	10.10	0.10	0.10	0.10	0.10	0.10
RCIC VALVE 1E51-F019	1.000	25.10	0.10	0.10	0.10	0.10	0.10
RSP 1C61-P001	------	0.00	0.00	0.00	0.00	0.00	0.00
RCIC VALVE 1E51-F031	0.330	9.10	0.10	0.10	0.10	0.10	0.10
RCIC VALVE 1E51-F059	0.542	18.90	0.10	0.10	0.10	0.10	0.10
RCIC VALVE 1E51-F360	0.144	8.50	0.10	0.10	0.10	0.10	0.10
RCIC VALVE 1E51-F068	0.361	11.80	0.10	0.10	0.10	0.10	0.10
RCIC VALVE 1E51-F069	0.145	8.50	0.10	0.10	0.10	0.10	0.10
TOTAL		561.70	897.00	299.20	199.20	199.20	199.20

TABLE 8.3-11
(SHEET 2 OF 2)

250 - VOLT BATTERY 2 (ESF DIVISION 1) LOAD REQUIREMENTS
AMPERAGE REQUIREMENTS PER TIME INTERVAL AFTER A-C POWER LOSS
UNIT 2 - BATTERY 2DC01E LOAD (AMPERES)

(Note): The numerical electrical loading values and interim time frames in this table are historical. Refer to the most recent revision of the DC battery sizing calculation for the current load profile.

LOAD NAME	RATING HP(KVA)	0-1 MIN	1-2 MIN	2-30 MIN	30-45 MIN	45-170 MIN	170-240 MIN
2EBOP (Load 1)	40.000	0.00	729.00	138.00	138.00	138.00	138.00
2EBOP (Load 2)	------	2.00	2.00	2.00	2.00	2.00	2.00
GEN H2 2ESOP	15.000	120.00	32.10	32.10	32.10	32.10	32.10
UPS 2IP01E	(25.00)	100 00	100.00	100.00	0.00	0.00	0.00
RCIC BAR CD VAC PUMP	3.000	44.00	11.00	11.00	11.00	11.00	11.00
RCIC BAR CD VC TK CND	3.000	17.30	11.50	11.50	11.50	11.50	11.50
RCIC VALVE 2E51-F080	0.360	10.10	0.10	0.10	0.10	0.10	0.10
RCIC VALVE 2E51-F045	4.180	41.10	0.10	0.10	0.10	0.10	0.10
RCIC VALVE 2E51-F013	4.180	105.100	0.10	0.10	0.10	0.10	0.10
RCIC VALVE 2E51-F022(1)	0.360	10.10	6.80	0.00	0.00	0.00	0.00
RCIC VALVE 2E51-F022(2)	0.10	0.10	0.10	0.10	0.10	0.10	0.10
RCIC VALVE 2E51-F046	0.360	10.10	0.10	0.10	0.10	0.10	0.10
RCIC VALVE 2E51-F019	1.100	25.10	0.10	0.10	0.10	0.10	0 10
RSP 2C61-P001	------	0.00	0.00	0.00	0.00	0.00	0.00
RCIC VALVE 2E51-F360	0.144	9.75	0.10	0.10	0.10	0.10	0.10
RCIC VALVE 2E51-F069	0.145	8.50	0.10	0.10	0.10	0.10	0.10
RCIC VALVE 2E51-F010	0.360	11.80	0.10	0.10	0.10	0.10	0.10
RCIC VALVE 2E51-F031	0.361	11.80	0.10	0.10	0.10	0.10	0.10
RCIC VALVE 2E51-F059	0.542	16.100	0.10	0.10	0.10	0.10	0.10
RCIC VALVE 2E51-F068	0.361	11.80	0.10	0.10	0.10	0.10	0.10
TOTAL		554.75	893.60	295.80	195.80	195.80	195.80

TABLE 8.3-12
(SHEET 1 OF 4)

125 - VOLT BATTERY 1A (ESF DIVISION 1) LOAD REQUIREMENTS
AMPERAGE REQUIREMENTS PER TIME INTERVAL AFTER A-C POWER LOSS
UNIT 1 - BATTERY 1DC07E LOAD (AMPERES)

(Note): The numerical electrical loading values and interim time frames in this table are historical. Refer to the most recent revision of the DC battery sizing calculation for the current load profile.

LOAD NAME	LOAD (AMPS)	0-1 MIN	1-15 MIN	15-30 MIN	30-60 MIN	60-240 MIN
RB LTG CAB #140	16.800	16.80	16.80	16.80	16.80	0.00
ANN INPUT CAB 1PA03J	19.2	19.2	19.2	19.2	0.00	0.00
480 SWGR 135X	12.380	12.38	0.58	0.58	0.58	0.58
D/G 0 CONT. PNL	8.560	8.56	0.46	0.46	0.46	0.46
ANN VIS PNL 1PA08J	36.000	36.00	36.00	36.00	0.00	0.00
480V SWGR 135Y	16.800	16.80	1.20	1.20	1.20	1.20
4 KV SWGR 141Y	64.260	64.26	3.96	3.96	3.96	3.96
ADS 1 PNL 1H13-P628	6.880	6.88	6.88	6.88	6.88	6.88
RCIC INTLK 1H13-P621	2.010	2.01	2.01	2.01	2.01	2.01
RHR INTLK 1H13-P601	2.000	2.00	2.00	2.00	2.00	2.00
RCIC INTLK 1H13-P601	1.050	1.05	1.05	1.05	1.05	1.05
LPCS INTLK 1H13-P629	2.962	2.96	2.96	2.96	2.96	2.96
PCI PNL 1PA13J	0.960	0.96	0.96	0.96	0.96	0.96
RI & FW INT 1H13-P612	3.700	3.70	3.70	3.70	3.70	3.70
RPS DIV A2 1H13-P609	0.770	0.77	0.77	0.77	0.77	0.77
RSP 1C61-P001	3.700	3.70	3.70	3.70	3.70	3.70
RR SWGR 151-1	0.570	0.57	0.57	0.57	0.57	0.57
LFMG PNL 1B33-P001A	2.063	2.06	2.06	2.06	2.06	2.06
PR RAD MON 1H13-P604	6.000	6.00	6.00	6.00	6.00	6.00
480V SWGR 131X	6.230	6.23	0.53	0.53	0.53	0.53
FW PUMP TURB 1A	2.400	2.40	2.40	2.40	2.40	2.40
EXC SWGR CUB 1PL18J	10.000	10.00	0.00	0.00	0.00	0.00
480V SWGR 137X	0.000	0.00	0.00	0.00	0.00	0.00
480V SWGR 137Y	0.000	0.00	0.00	0.00	0.00	0.00
480V SWGR 133	4.420	4.42	0.62	0.62	0.62	0.62
DAC PNL 0PA04J	5.000	5.00	5.00	5.00	5.00	5.00
480V SWGR 131A	10.450	10.45	0.95	0.95	0.95	0.95
480V SWGR 131B	0.000	0.00	0.00	0.00	0.00	0.00
480V SWGR 133A	6.330	6.33	0.63	0.63	0.63	0.63
480V SWGR 133B	8.350	8.35	0.75	0.75	0.75	0.75
480V SWGR 131Y	4.250	4.25	0.45	0.45	0.45	0.45
4KV SWGR 141X	43.750	43.75	3.55	3.55	3.55	3.55
6.9 KV SWGR 151	42.990	42.99	2.79	2.79	2.79	2.79
MP & AP PNL 1PA02J	1.500	1.50	1.50	1.50	1.50	1.50
MAIN GEN EXC HOUSING	0.000	0.00	0.00	0.00	0.00	0.00
SWGR ACB TEST CAB	0.000	0.00	0.00	0.00	0.00	0.00
FP CAB 1FP02E LD1	16.000	16.00	16.00	0.00	0.00	0.00
FP CAB 1FP02E LD2	16.000	16.00	16.00	16.00	0.00	0.00
FP CAB 1FP02E LD3	5.000	5.00	5.00	5.00	5.00	5.00
TURB LTG CAB #141	47.600	47.60	47.60	47.60	47.60	0.00
RW PNL OPL60J ANN	4.200	4.20	4.20	4.20	4.20	4.20
VQ HVAC PNL 1PL71J	0.420	0.42	0.42	0.42	0.42	0.42

TABLE 8.3-12
(SHEET 2 OF 4)

125 - VOLT BATTERY 1A (ESF DIVISION 1) LOAD REQUIREMENTS
AMPERAGE REQUIREMENTS PER TIME INTERVAL AFTER A-C POWER LOSS
UNIT 1 - BATTERY 1DC07E LOAD (AMPERES)

(Note): The numerical electrical loading values and interim time frames in this table are historical. Refer to the most recent revision of the DC battery sizing calculation for the current load profile.

LOAD NAME	LOAD (AMPS)	0-1 MIN	1-15 MIN	15-30 MIN	30-60 MIN	60-240 MIN
SUP MASTER OPM08J L1	10.500	10.50	10.50	0.00	0.00	0.00
SUP MASTER OPM08J L2	0.000	0.00	0.00	3.00	3.00	3.00
RW PNL OPL01J ANN	12.500	12.50	12.50	12.50	12.50	12.50
ARI PNL 1H13-P800	7.250	7.25	4.55	4.55	4.55	4.55
DC INST 1JY-DC040	1.600	1.60	1.60	1.60	1.60	1.60
DC INST 1JY-DC041	1.600	1.60	1.60	1.60	1.60	1.60
TOTAL	475.005	475.01	250.00	226.50	155.31	90.91

TABLE 8.3-12
(SHEET 3 OF 4)

125 - VOLT BATTERY 2A (ESF DIVISION 1) LOAD REQUIREMENTS
AMPERAGE REQUIREMENTS PER TIME INTERVAL AFTER A-C POWER LOSS
UNIT 2 - BATTERY 2DC07E LOAD (AMPERES)

(Note): The numerical electrical loading values and interim time frames in this table are historical. Refer to the most recent revision of the DC battery sizing calculation for the current load profile.

LOAD NAME	LOAD (AMPS)	0-1 MIN	1-15 MIN	15-30 MIN	30-60 MIN	60-240 MIN
LPCS INTLK 2H13-P629	2.940	2.94	2.94	2.94	2.94	2.94
DC INS PWR 2JY-DC040	1.600	1.60	1.60	1.60	1.60	1.60
RCIC INTLK 2H13-P621	2.310	2.31	2.31	2.31	2.31	2.31
RHR INTLK 2H13-P601	2.000	2.00	2.00	2.00	2.00	2.00
RCIC INTLK 2H13-P601	1.070	1.07	1.07	1.07	1.07	1.07
PCI PNL 2PA13J	0.96	0.96	0.96	0.96	0.96	0.96
RCIC INTLK 2H13-P612	3.700	3.70	3.70	3.70	3.70	3.70
DC INS PWR 2JY-DC041	1.600	1.60	1.60	1.60	1.60	1.60
RPS DIV A2 2H13-P609	0.760	0.76	0.76	0.76	0.76	0.76
RB LTG CAB #240	12.800	12.80	12.80	12.80	12.80	0.00
RP RAD MON 2H13-P604	6.000	6.00	6.00	6.00	6.00	6.00
D/G O CONT PNL	8.560	8.56	0.46	0.46	0.46	0.46
LMFG PNL 2B33-P001A	2.063	2.06	2.06	2.06	2.06	2.06
6.9 KV SWGR 251-1	0.570	0.57	0.57	0.57	0.57	0.57
ANN VIS PNL 2PA08J	36.000	36.00	36.00	36.00	0.00	0.00
480V SWGR 235X	12.380	12.38	0.58	0.58	0.58	0.58
AN INPUT CAB 2PA03J	19.2	19.2	19.2	19.2	0.00	0.00
480V SWGR 235Y	18.720	18.72	1.22	1.22	1.22	1.22
SET PT VER DEVICE	5.000	5.00	5.00	5.00	5.00	5.00
4KV SWGR 241Y	84.750	84.75	4.35	4.35	4.35	4.35
RSP 2C61-P001	3.700	3.70	3.70	3.70	3.70	3.70
FW PUMP TURB 2A	2.400	2.40	2.40	2.40	2.40	2.40
MAIN GEN EXC HSG	0.000	0.00	0.00	0.00	0.00	0.00
VQ HVAC PNL 2PL71J	0.420	0.42	0.42	0.42	0.42	0.42
FP CAB 2FP02E LD1	16.000	16.00	16.00	0.00	0.00	0.00
FP CAB 2FPO2E LD2	16.000	16.00	16.00	16.00	0.00	0.00
FP CAB 2FP02E LD3	5.000	5.00	5.00	5.00	5.00	5.00
EXC SWGR CUB 2PL18J	10.000	10.00	0.00	0.00	0.00	0.00
480 SWGR 233	6.470	6.47	0.76	0.76	0.76	0.76
TURB LTG CAB #241	44.400	44.40	44.40	44.40	44.40	0.00
480V SWGR 237X	0.000	0.00	0.00	0.00	0.00	0.00
480V SWGR 237Y	0.000	0.00	0.00	0.00	0.00	0.00
480V SWGR 231A	10.460	10.46	0.98	0.98	0.98	0.98
480V SWGR 231B	0.000	0.00	0.00	0.00	0.00	0.00
480V SWGR 233A	6.380	6.38	0.68	0.68	0.68	0.68
480V SWGR 233B	6.340	6.34	0.64	0.64	0.64	0.64
480V SWGR 231Y	2.210	2.21	0.31	0.31	0.31	0.31
480V SWGR 231X	6.480	6.48	0.78	0.78	0.78	0.78
4KV SWGR 241X	57.460	57.46	3.86	3.86	3.86	3.86
SWGR ACB TEST CAB	0.000	0.00	0.00	0.00	0.00	0.00
6.9KV SWGR 251	43.770	43.77	3.57	3.57	3.57	3-57

TABLE 8.3-12
(SHEET 4 OF 4)

125 - VOLT BATTERY 2A (ESF DIVISION 1) LOAD REQUIREMENTS
AMPERAGE REQUIREMENTS PER TIME INTERVAL AFTER A-C POWER LOSS
UNIT 2 - BATTERY 2DC07E LOAD (AMPERES)

(Note): The numerical electrical loading values and interim time frames in this table are historical. Refer to the most recent revision of the DC battery sizing calculation for the current load profile.

LOAD NAME	LOAD (AMPS)	0-1 MIN	1-15 MIN	15-30 MIN	30-60 MIN	60-240 MIN
ARI PNL 2H13-P800 L1	9.300	9.30	9.30	0.00	0.00	0.00
ARI PNL 2H13-P800 L2	0.000	0.00	0.00	5.60	5.60	5.60
ADS 1 PNL 2H13-P628	6.600	6.60	6.60	6.60	6.60	6.60
MP & AP PNL 2PA02J	1.500	1.50	1.50	1.50	1.50	1.50
TOTAL	477.87	477.87	222.09	202.39	131.19	73.99

TABLE 8.3-13
(SHEET 1 OF 4)

125 - VOLT BATTERY 1B (ESF DIVISION 2) LOAD REQUIREMENTS
AMPERAGE REQUIREMENTS PER TIME INTERVAL AFTER A-C POWER LOSS
UNIT 1 - BATTERY 1DC14E LOAD (AMPERES)

(Note): The numerical electrical loading values and interim time frames in this table are historical. Refer to the most recent revision of the DC battery sizing calculation for the current load profile.

LOAD NAME	LOAD (AMPS)	0-1 MIN	1-15 MIN	15-30 MIN	30-60 MIN	60-240 MIN
ANN VIS PNL 1PA08J	36.000	36.00	36.00	36.00	0.00	0.00
480V SWGR 136X	24.610	24.61	1.01	1.01	1.01	1.01
RB LTG CAB #142	14.800	14.80	14.80	14.80	14.80	0.00
RR SWGR 152-1	0.550	0.55	0.55	0.55	0.55	0.55
D/G 1A CONT PNL	8.560	8.56	0.46	0.46	0.46	0.46
RSP 1C61-P001	0.000	0.00	0.00	0.00	0.00	0.00
480V SWGR 136Y	20.590	20.59	0.99	0.99	0.99	0.99
4KV SWGR 142Y	71.560	71.56	4.56	4.56	4.56	4.56
ADS 2 PNL 1H13-P645	0.642	0.64	0.64	0.64	0.64	0.64
ADS 2 PNL 1H13-P631	5.812	5.81	5.81	5.81	5.81	5.81
RHR INTLK 1H13-P601	2.000	2.00	2.00	2.00	2.00	2.00
AB LTG CAB #40	24.400	24.40	24.40	24.40	24.40	0.00
RCIC INTLK 1H13-P601	0.550	0.55	0.55	0.55	0.55	0.55
RCIC INTLK 1H13-P618	3.130	3.13	3.13	3.13	3.13	3.13
RPS DIV B2 1H13-P611	0.760	0.76	0.76	0.76	0.76	0.76
CR HVAC PNL OPL15J	0.790	0.79	0.79	0.79	0.79	0.79
ARI PNL 1H13-P801	7.500	7.50	4.60	4.60	4.60	4.60
PCI PNL 1PA14J	0.960	0.96	0.96	0.96	0.96	0.96
STGS PNL 1PL17J	0.700	0.70	0.70	0.70	0.70	0.70
AEER HVAC OPL42J	0.410	0.41	0.41	0.41	0.41	0.41
LFMG PNL 1B33-P001B	2.063	2.06	2.06	2.06	2.06	2.06
PR RAD MON 1H13-P604	6.000	6.00	6.00	6.00	6.00	6.00
DC INST 1JY-DC042	1.600	1.60	1.60	1.60	1.60	1.60
480V SWGR 134A	8.380	8.38	0.78	0.78	0.78	0.78
480V SWGR 134B	0.000	0.00	0.00	0.00	0.00	0.00
480V SWGR 138	0.000	0.00	0.00	0.00	0.00	0.00
TIP PNL 1H13-P607	0.800	0.80	0.00	0.00	0.00	0.00
FP INVERTER 1FP01E	60.000	60.00	60.00	0.00	0.00	0.00
EHC CAB 1PA01J	3.000	3.00	3.00	3.00	3.00	3.00
FW CONT PN 1H13-P613	3.000	3.00	3.00	3.00	3.00	3.00
FW PUMP TURB 1B CONT	2.400	2.40	2.40	2.40	2.40	2.40
EXC SWGR CUB 1PL18J	10.000	10.00	0.00	0.00	0.00	0.00
MP & AP PNL 1PA02J	1.604	1.60	1.60	1.60	1.60	1.60
480V SWGR 134Y	0.000	0.00	0.00	0.00	0.00	0.00
480V SWGR 134X	8.620	8.62	1.02	1.02	1.02	1.02
480V SWGR 132A	10.480	10.48	0.98	0.98	0.98	0.98
480V SWGR 132X	8.480	8.48	0.88	0.88	0.88	0.88
480V SWGR 132Y	2.200	2.20	0.30	0.30	0.30	0.30
480V SWGR 132B	2.130	2.13	0.23	0.23	0.23	0.23
4KV SWGR 142X	43.340	43.34	3.14	3.14	3.14	3.14
6.9 KV SWGR 152	43.870	43.87	3.67	3.67	3.67	3.67

TABLE 8.3-13
(SHEET 2 OF 4)

125 - VOLT BATTERY 1B (ESF DIVISION 2) LOAD REQUIREMENTS
AMPERAGE REQUIREMENTS PER TIME INTERVAL AFTER A-C POWER LOSS
UNIT 1 - BATTERY 1DC14E LOAD (AMPERES)

(Note): The numerical electrical loading values and interim time frames in this table are historical. Refer to the most recent revision of the DC battery sizing calculation for the current load profile.

LOAD NAME	LOAD (AMPS)	0-1 MIN	1-15 MIN	15-30 MIN	30-60 MIN	60-240 MIN
H2 & STATOR CAB 1PL19J	2.500	2.50	2.50	2.50	2.50	2.50
SWGR ACB TEST CAB	0.000	0.00	0.00	0.00	0.00	0.00
TURB LTG CAB #143	51.200	51.20	51.20	51.20	51.20	0.00
FP PANEL OFP17J	5.000	5.00	5.00	5.00	5.00	5.00
RELAY TEST PANEL	0.000	0.00	0.00	0.00	0.00	0.00
125 VDC CONTROL RELAY	0.144	0.14	0.14	0.14	0.14	0.14
TOTAL	501.135	501.13	252.63	192.63	156.63	66.23

TABLE 8.3-13
(SHEET 3 OF 4)

125 - VOLT BATTERY 2B (ESF DIVISION 2) LOAD REQUIREMENTS
AMPERAGE REQUIREMENTS PER TIME INTERVAL AFTER A-C POWER LOSS
UNIT 2 - BATTERY 2DC14E LOAD (AMPERES)

(Note): The numerical electrical loading values and interim time frames in this table are historical. Refer to the most recent revision of the DC battery sizing calculation for the current load profile.

LOAD NAME	LOAD (AMPS)	0-1 MIN	1-15 MIN	15-30 MIN	30-60 MIN	60-240 MIN
RPS DIV B2 2H13-P611	0.760	0.760	0.760	0.760	0.760	0.760
RCIC INTLK 2H13-P601	0.550	0.550	0.550	0.550	0.550	0.550
RCIC INTLK 2H13-P618	3.290	3.290	3.290	3.290	3.290	3.290
RHR INTLK 2H13-P601	2.000	2.000	2.000	2.000	2.000	2.000
ADS 2 PNL 2H13-P645	0.642	0.642	0.642	0.642	0.642	0.642
CR HVAC PNL 0PL16J	0.794	0.794	0.794	0.794	0.794	0.794
STGS PNL 2PL17J	0.700	0.700	0.700	0.700	0.700	0.700
LMFG PNL 2B33-P001B	2.063	2.063	2.063	2.063	2.063	2.063
AEER HVAC PNL 0PL43J	0.420	0.420	0.420	0.420	0.420	0.420
AB LTG CAB NO 41	13.200	13.200	13.200	13.200	13.200	0.000
PR RAD MON 2H13-P604	6.000	6.000	6.000	6.000	6.000	6.000
RB LTG CAB NO 242	35.00	35.00	35.00	35.00	35.00	0.000
D/G 2A CONT PNL	8.560	8.560	0.460	0.460	0.460	0.460
ANN VIS PNL 2PA08J	36.000	36.000	36.000	36.000	0.000	0.000
480V SWGR 236X	24.700	24.700	1.100	1.100	1.100	1.100
RR SWGR 252-1	0.550	0.550	0.550	0.550	0.550	0.550
480V SWGR 236Y	20.780	20.780	1.180	1.180	1.180	1.180
DC INST 2JY-DC042	1.600	1.600	1.600	1.600	1.600	1.600
PCI PNL 2PA14J	0.960	0.960	0.960	0.960	0.960	0.960
4KV SWGR 242Y	78.130	78.130	4.430	4.430	4.430	4.430
RSP 2C61-P6001	0.000	0.000	0.000	0.000	0.000	0.000
FW PUMP TURB 2B CONT	2.400	2.400	2.400	2.400	2.400	2.400
FW CON PNL 2H13-P613	3.000	3.000	3.000	3.000	3.000	3.000
RELAY TEST PANEL	0.000	0.000	0.000	0.000	0.000	0.000
TIP PNL 2H13-P607	0.800	0.800	0.000	0.000	0.000	0.000
EXC SWGR CUB 2PL18J	10.000	10.000	0.000	0.000	0.000	0.000
FP INVERTER 2FP01E	60.000	60.000	60.000	0.000	0.000	0.000
480V SWGR 234A	8.450	8.450	0.850	0.850	0.850	0.850
480V SWGR 234B	0.000	0.000	0.000	0.000	0.000	0.000
480V SWGR 238	2.180	2.180	0.280	0.280	0.280	0.280
480V SWGR 234Y	0.000	0.000	0.000	0.000	0.000	0.000
480V SWGR 234X	6.620	6.620	0.920	0.920	0.920	0.920
480V SWGR 232A	10.560	10.560	1.060	1.060	1.060	1.060
480V SWGR 232X	8.550	8.550	0.950	0.950	0.950	0.950
480V SWGR 232B	0.000	0.000	0.000	0.000	0.000	0.000
480V SWGR 232Y	4.280	4.280	0.480	0.480	0.480	0.480
TURB LTG CAB NO 243	43.200	43.200	43.200	43.200	43.200	0.000
4KV SWGR 242X	50.150	50.150	3.250	3.250	3.250	3.250
SWGR ACB TEST CAB	0.000	0.000	0.000	0.000	0.000	0.000
6.9 KV SWGR 252	44.030	44.030	3.830	3.830	3.830	3.830
ARI PNL 2H13-P801 L1	9.300	9.300	9.300	0.000	0.000	0.000

TABLE 8.3-13
(SHEET 4 OF 4)

125 - VOLT BATTERY 2B (ESF DIVISION 2) LOAD REQUIREMENTS
AMPERAGE REQUIREMENTS PER TIME INTERVAL AFTER A-C POWER LOSS
UNIT 2 - BATTERY 2DC14E LOAD (AMPERES)

(Note): The numerical electrical loading values and interim time frames in this table are historical. Refer to the most recent revision of the DC battery sizing calculation for the current load profile.

LOAD NAME	LOAD (AMPS)	0-1 MIN	1-15 MIN	15-30 MIN	30-60 MIN	60-240 MIN
ARI PNL 2H13-P801 L2	0.000	0.000	0.000	5.600	5.600	5.600
ADS 2 PNL 2H13-P631	5.512	5.512	5.512	5.512	5.512	5.512
H2 & STATOR CAB 2PL19 J	2.500	2.500	2.500	2.500	2.500	2.500
MP & AP PNL 2PA02J	1.704	1.704	1.704	1.704	1.704	1.704
125 VDC Control Relay	0.144	0.144	0.144	0.144	0.144	0.144
TOTAL	513.079	513.079	254.079	190.379	154.379	62.979

TABLE 8.3-14

ESF DIVISION 3 (HPCS) 125-VDC BATTERY LOAD REQUIREMENTS
UNIT 1 - BATTERY BATT 1C LOAD (AMPERES)
(1DC18E)

LOAD NAME	LOAD (AMPS)	0-1 MIN	1-240 MIN
4KV SWGR 143	30.110	30.110	2.110
D/G FLD FLASHING	1.900	1.900	0.000
D/G CAB 1H22-P028	1.000	1.000	0.500
D/G CAB 1E22-P301B	2.000	2.000	1.562
GEN CONT CAB S001	44.800	44.800	12.800
HPCS PANEL 1H13-P625	3.850	3.850	3.850
PWR SUPPLY 1E22-K500	1.600	1.600	1.600
DIESEL AIR COMP CONT	2.000	2.000	0.000
TOTAL	87.260	87.260	22.422

ESF DIVISION 3 (HPCS) 125-VDC BATTERY LOAD REQUIREMENTS
UNIT 2 - BATTERY BATT 2C LOAD (AMPERES)
2DC18E

LOAD NAME	LOAD (AMPS)	0-1 MIN	1-240 MIN
4KV SWGR 243	30.270	30.270	2.270
D/G CAB 2E22-P301B	2.000	2.000	1.562
D/G CAB 2H22-P028	1.000	1.000	0.500
GEN CONT CAB S001	44.800	44.800	12.800
D/G FLD FLASHING	1.900	1.900	0.000
HPCS PANEL 2H13-P625	3.850	3.850	3.850
PWR SUPPLY 2E22-K500	1.600	1.600	1.600
DIESEL AIR COMP CONT	2.000	2.000	0.000
TOTAL	87.420	87.420	22.582

8.4 OTHER ELECTRICAL FEATURES AND REQUIREMENTS FOR SAFETY

This section presents other electrical features and requirements for safety which deal with distinct aspects of the alternating current power systems and the direct current onsite emergency power systems, as well as selected items which are associated with these areas.

The other electrical features, requirements, and related matters for safety addressed in this section is as follows:

a. Containment electrical penetrations.

8.4.1 Containment Electrical Penetrations

Containment electrical penetrations are designed to meet Regulatory Guide 1.63. Each primary containment medium and high voltage (6.9 kV, 4.16 kV, and 480 volt) electrical penetration circuit is provided with primary and backup primary containment penetration conductor overcurrent protective devices for those circuits that are required to be energized during reactor operation. Other circuits, which are not required during reactor operation are maintained deenergized. Table 8.4-1 (Unit 1) and 8.4-2 (Unit 2) list the primary containment conductor overcurrent protective devices that provide the required primary and backup overcurrent protection for circuits energized during reactor operation. The A.C. circuits inside primary containment that are deenergized during reactor operation are:

a. Installed welding grid systems 1A and 1B (Unit 1); 2A and 2B (Unit 2).

b. All drywell lighting circuits.

c. All drywell hoists and crane circuits.

TABLE 8.4-1
(SHEET 1 of 3)

UNIT 1 PRIMARY CONTAINMENT PENETRATION CONDUCTOR OVERCURRENT PROTECTIVE DEVICES

DEVICE NUMBER AND LOCATION	SYSTEM/COMPONENT POWERED
a. 6.9 kV Circuit Breakers	
1. Swgr. 151 (Cub. 4, Bkr. 3A)	RR Pump 1A, Primary - fast speed
2. Swgr. 152 (Cub. 4, Bkr. 3B)	RR Pump 1B, Primary - fast speed
3. Swgr. 151-1 (Cub. 3, Bkr. 2A)	RR Pump 1A, Primary - low speed
4. Swgr. 152-1 (Cub. 3, Bkr. 2B)	RR Pump 1B, Primary - low speed
5. Swgr. 151-1 (Cub. 2, Bkr, 4A)	RR Pump 1A, Backup - fast speed
6. Swgr. 152-1 (Cub. 2, Bkr. 4B)	RR Pump 1B, Backup - fast speed
b. 4.16 kV Circuit Breakers	
1. Swgr. 141Y (Cub. 13, Bkr. 1A)	RR Pump 1A, Backup - low speed
2. Swgr. 142Y (Cub. 14, Bkr. 1B)	RR Pump 1B, Backup - low speed
c. 480 VAC Circuit Breakers	
1. Swgr. 136Y (Compt. 403C)	VP/Pri. Cont. Vent Supply Fan 1B
2. Swgr. 135Y (Compt. 203A)	VP/Pri. Cont. Vent Supply Fan 1A
d. 480 VAC (Molded Case) Circuit Breakers	
1. Backup breakers are located in the back of the respective MCC.	
a) MCC 136Y-2 (Compt. C4)	RR/MOV 1B33-F067B
b) MCC 136Y-2 (Compt. A3)	RR/MOV 1B33-F023B
c) MCC 134X-1 (Compt. B3)	NB/MOV 1B21-F001

TABLE 8.4-1
(SHEET 2 of 3)

UNIT 1 PRIMARY CONTAINMENT PENETRATION CONDUCTOR OVERCURRENT PROTECTIVE DEVICES

DEVICE NUMBER AND LOCATION	SYSTEM/COMPONENT POWERED
d) MCC 134X-1 (Compt. B4)	NB/MOV 1B21-F002
e) MCC 136Y-1 (Compt. B2) (Normal)	RH/MOV 1E12-F009
f) MCC 136Y-2 (Compt. C5)	RI/MOV 1E51-F063
g) MCC 135Y-1 (Compt. A1)	RR/MOV 1B33-F023A
h) MCC 135Y-1 (Compt. A4)	RR/MOV 1B33-F067A
i) MCC 133-1 (Compt. C2)	RT/MOV 1G33-F102
j) MCC 133-1 (Compt. E1)	NB/MOV 1B21-F005
k) MCC 136Y-2 (Compt. B1)	NB/MOV 1B21-F016
l) MCC 136Y-2 (Compt. E1)	RH/MOV 1E12-F099A
m) MCC 136Y-1 (Compt. E4)	RT/MOV 1G33-F001
n) MCC 136Y-2 (Compt. A5)	WR/MOV 1WR180
o) MCC 136Y-2 (Compt. D6)	RH/MOV 1E12-F099B
p) MCC 136Y-1 (Compt. H5)	VP/MOV 1VP113B
q) MCC 136Y-1 (Compt. H4)	VP/MOV 1VP114A
r) MCC 136Y-1 (Compt. H3)	VP/MOV 1VP113A
s) MCC 136Y-1 (Compt. H6)	VP/MOV 1VP114B
t) MCC 136Y-2 (Compt. A4)	WR/MOV 1WR179
u) MCC 135Y-1 (Compt. D3)	RT/MOV 1G33-F101
v) MCC 135Y-1 (Compt. D4)	RT/MOV 1G33-F100
w) MCC 133-1 (Compt. C3)	RT/MOV 1G33-F106
x) MCC 136Y-2 (Compt. D5)	RI/MOV 1E51-F076
y) MCC 135X-1 (Compt. C2/C3) (Emerg)	RH/MOV 1E12-F009
z) MCC 133-2 (Compt. AC1)	VP/Drywell Cooler, 1VP15SA

TABLE 8.4-1
(SHEET 3 of 3)

UNIT 1 PRIMARY CONTAINMENT PENETRATION CONDUCTOR OVERCURRENT PROTECTIVE DEVICES

DEVICE NUMBER AND LOCATION	SYSTEM/COMPONENT POWERED
aa) MCC 133-2 (Compt. AB1)	VP/Drywell Cooler, 1VP15SE
ab) MCC 133-2 (Compt. AB2)	VP/Drywell Cooler, 1VP15SD
ac) MCC 134X-2 (Compt. H1)	VP/Drywell Cooler, 1VP15SB
ad) MCC 134X-2 (Compt. H2)	VP/Drywell Cooler, 1VP15SC
ae) MCC 134X-2 (Compt. J1)	VP/Drywell Cooler, 1VP15SF

2 Backup breakers are located in the front of the respective MCC.

a) MCC 135X-2 (Compt. E4)	VP/Pri. Cont. Vent Supply Fan 1A Backup
b) MCC 136X-2 (Compt. G4)	VP/Pri. Cont. Vent Supply Fan 1B Backup

TABLE 8.4-2
(SHEET 1 of 3)

UNIT 2 PRIMARY CONTAINMENT PENETRATION CONDUCTOR OVERCURRENT PROTECTIVE DEVICES

DEVICE NUMBER AND LOCATION	SYSTEM/COMPONENT POWERED
a. 6.9 kV Circuit Breakers	
1. Swgr. 251 (Cub. 8, Bkr. 3A)	RR Pump 2A, Primary - fast speed
2. Swgr. 252 (Cub. 7, Bkr. 3B)	RR Pump 2B, Primary - fast speed
3. Swgr. 251-1 (Cub. 3, Bkr. 2A)	RR Pump 2A, Primary - low speed
4. Swgr. 252-1 (Cub. 3, Bkr. 2B)	RR Pump 2B, Primary - low speed
5. Swgr. 251-1 (Cub. 2, Bkr. 4A)	RR Pump 2A, Backup - fast speed
6. Swgr. 252-1 (Cub. 2, Bkr. 4B)	RR Pump 2B, Backup - fast speed
b. 4.16 kV Circuit Breakers	
1. Swgr. 241Y (Cub. 1, Bkr. 1A)	RR Pump 2A, Backup - low speed
2. Swgr. 242Y (Cub. 1, Bkr. 1B)	RR Pump 2B, Backup - low speed
c. 480 VAC Circuit Breakers	
1. Swgr. 236Y (Compt. 400A)	VP/Pri. Cont. Vent Supply Fan 2B
2. Swgr. 235Y (Compt. 202C)	VP/Pri. Cont. Vent Supply Fan 2A
d. 480 VAC (Molded Case) Circuit Breakers	
1. Backup breakers are located in the back of the respective MCC.	
a) MCC 236Y-2 (Compt. C4)	RR/MOV 2B33-F067B
b) MCC 236Y-2 (Compt. A3)	RR/MOV 2B33-F023B
c) MCC 234X-1 (Compt. B3)	NB/MOV 2B21-F001

TABLE 8.4-2
(SHEET 2 of 3)

UNIT 2 PRIMARY CONTAINMENT PENETRATION CONDUCTOR OVERCURRENT PROTECTIVE DEVICES

DEVICE NUMBER AND LOCATION	SYSTEM/COMPONENT POWERED
d) MCC 234X-1 (Compt. B4)	NB/MOV 2B21-F002
e) MCC 236Y-1 (Compt. B2) (Normal)	RH/MOV 2E12-F009
f) MCC 236Y-2 (Compt. E4)	RI/MOV 2E51-F063
g) MCC 235Y-1 (Compt. A1)	RR/MOV 2B33-F023A
h) MCC 235Y-1 (Compt. A4)	RR/MOV 2B33-F067A
i) MCC 233-1 (Compt. C2)	RT/MOV 2G33-F102
j) MCC 233-1 (Compt. E1)	NB/MOV 2B21-F005
k) MCC 236Y-2 (Compt. B1)	NB/MOV 2B21-F016
l) MCC 236Y-2 (Compt. E1)	RH/MOV 2E12-F099A
m) MCC 236Y-1 (Compt. E4)	RT/MOV 2G33-F001
n) MCC 236Y-2 (Compt. A5)	WR/MOV 2WR180
o) MCC 236Y-2 (Compt. D6)	RH/MOV 2E12-F099B
p) MCC 236Y-1 (Compt. H5)	VP/MOV 2VP113B
q) MCC 236Y-1 (Compt. H4)	VP/MOV 2VP114A
r) MCC 236Y-1 (Compt. H3)	VP/MOV 2VP113A
s) MCC 236Y-1 (Compt. H6)	VP/MOV 2VP114B
t) MCC 236Y-2 (Compt. A4)	WR/MOV 2WR179
u) MCC 235Y-1 (Compt. D3)	RT/MOV 2G33-F101
v) MCC 235Y-1 (Compt. D4)	RT/MOV 2G33-F100
w) MCC 233-1 (Compt. C3)	RT/MOV 2G33-F106
x) MCC 236Y-2 (Compt. D5)	RI/MOV 2E51-F076
y) MCC 235X-1 (Compt. C2/C3) (Emerg)	RH/MOV 2E12-F009
z) MCC 233-2 (Compt. AC1)	VP/Drywell Cooler, 2VP15SA

TABLE 8.4-2
(SHEET 3 of 3)

UNIT 2 PRIMARY CONTAINMENT PENETRATION CONDUCTOR OVERCURRENT PROTECTIVE DEVICES

DEVICE NUMBER AND LOCATION	SYSTEM/COMPONENT POWERED
aa) MCC 233-2 (Compt. AB1)	VP/Drywell Cooler, 2VP15SE
ab) MCC 233-2 (Compt. AB2)	VP/Drywell Cooler, 2VP15SD
ac) MCC 234X-2 (Compt. H1)	VP/Drywell Cooler, 2VP15SB
ad) MCC 234X-2 (Compt. H2)	VP/Drywell Cooler, 2VP15SC
ae) MCC 234X-2 (Compt. J1)	VP/Drywell Cooler, 2VP15SF

2. Backup breakers are located in the front of the respective MCC.

a) MCC 235X-2 (Compt. AA4)	VP/Pri. Cont. Vent Supply Fan 2A Backup
b) MCC 236X-2 (Compt. AA4)	VP/Pri. Cont. Vent Supply Fan 2B Backup

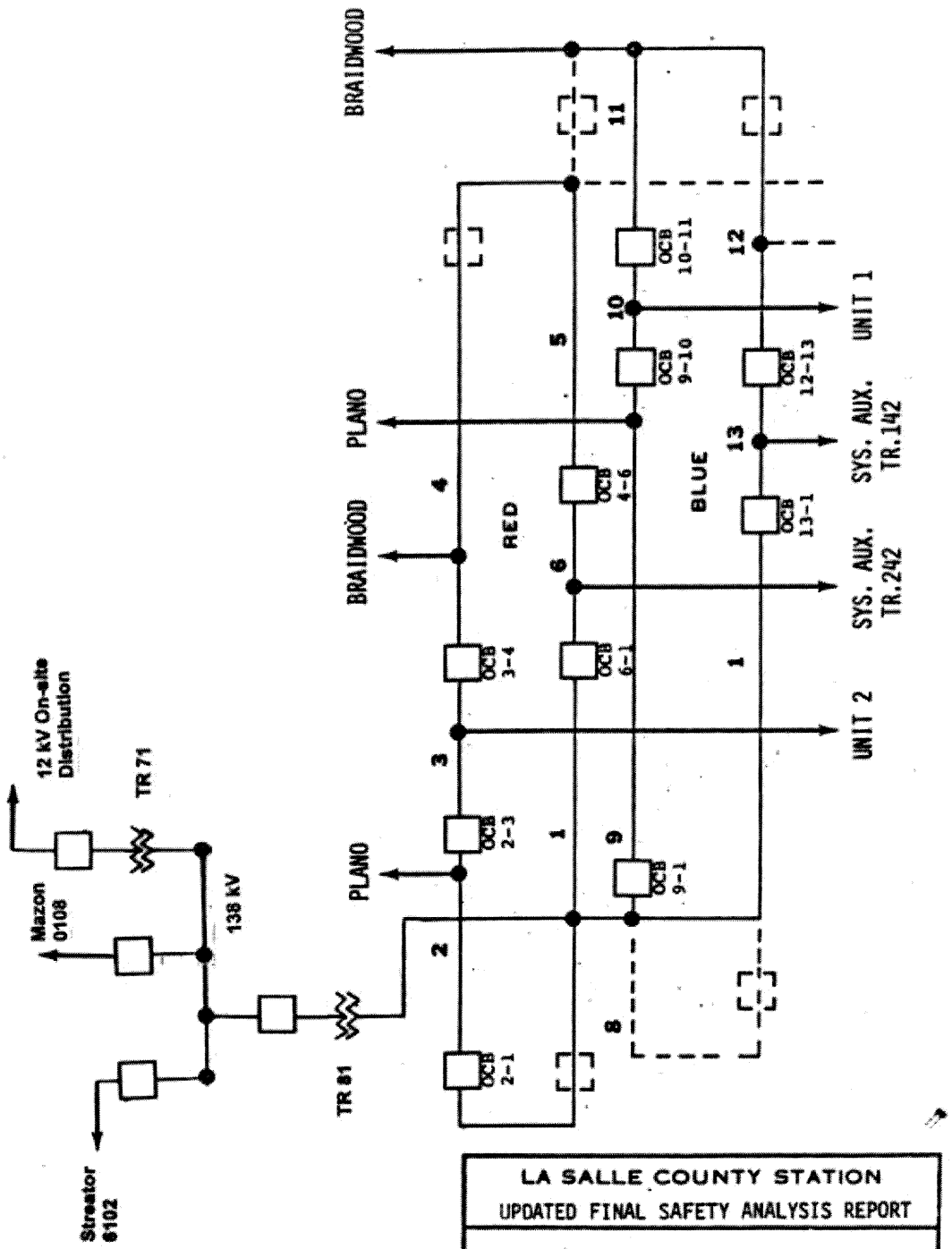

LA SALLE COUNTY STATION
UPDATED FINAL SAFETY ANALYSIS REPORT

FIGURE 8.1-1

SINGLE-LINE DIAGRAM - 345-kV SWITCHYARD

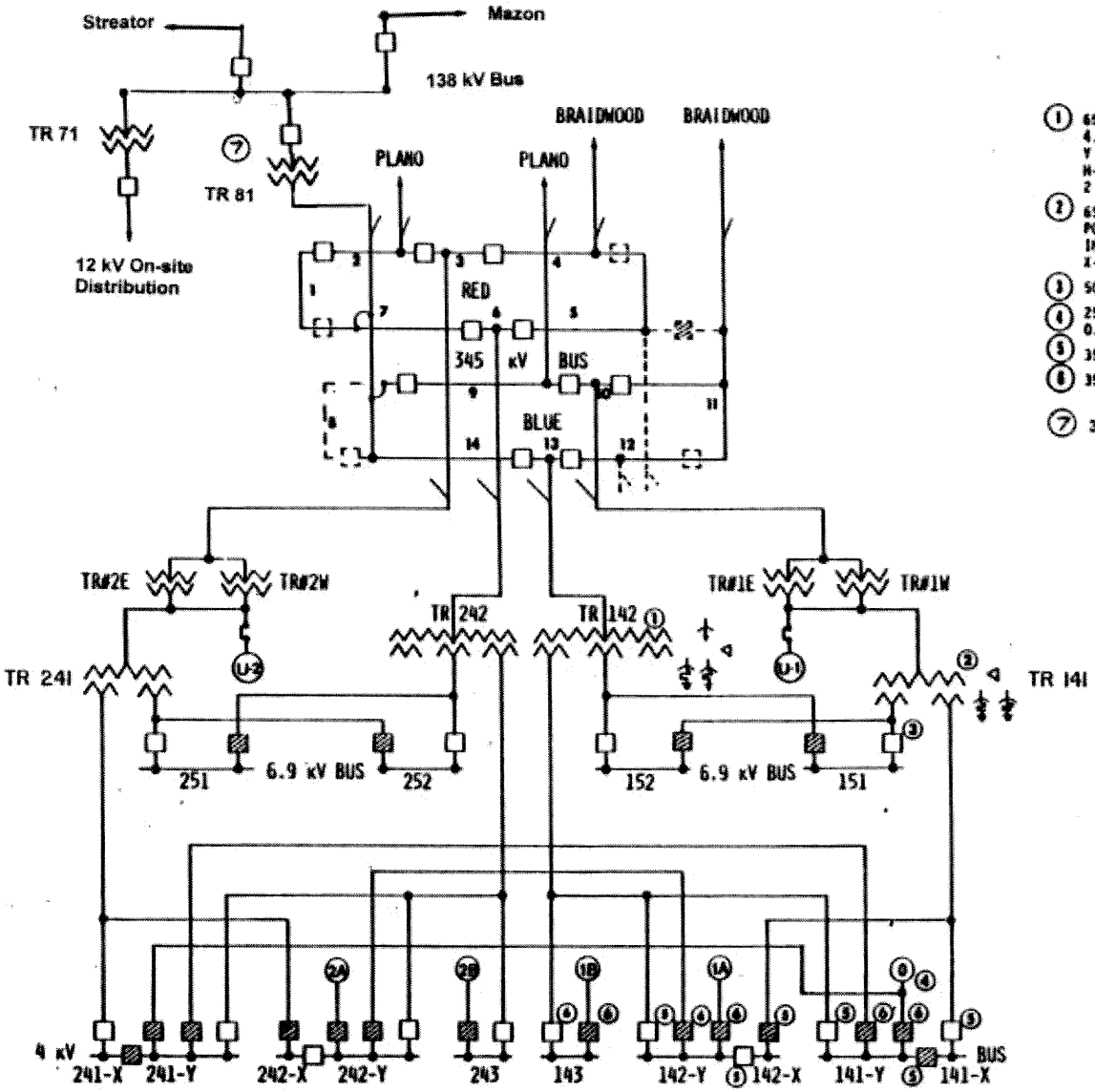

NOTES

1. 65 MVA 345 Y/199.2 - 6.9Y/3.98 - 4.16Y/2.4 - 4.16 kV 3φ SYS. AUX. TR., X (6.9 kV) 36 MVA, Y (4.16 kV) 29 MVA: IMPED. ON 39 MVA BASE: H-X 12.75%, H-Y 18.75%, X-Y 28%. 2 ± 2 1/2% TAPS IN THE 345 kV WINDING.
2. 65 MVA 23.7-6.9Y/3.98 - 4.16Y/2.4 kV 3φ UNIT AUX. POWER TR. X (6.9 kV) 36 MVA, Y (4.16 kV) 29 MVA; IMPED. ON 39 MVA BASE: H-X 14.0%, H-Y 19.5%, X-Y 33.5%. 2 ± 2 1/2% TAPS IN 23.7 kV WIND.
3. 500 MVA, 2000 AMP 6.9 kV CIRCUIT BREAKER.
4. 2500 kW, 3125 kVA DIESEL DRIVEN GENERATOR 0.8 P.F, 4.16 kV.
5. 350 MVA, 3000 AMP 4 kV CIRCUIT BREAKER.
6. 350 MVA, 1200 AMP 4 kV CIRCUIT BREAKER.
7. 300 MVA AUTO TRANSFORMER

LA SALLE COUNTY STATION
UPDATED FINAL SAFETY ANALYSIS REPORT

FIGURE 8.1-2

ONE-LINE DIAGRAM
STATION AUXILIARY POWER

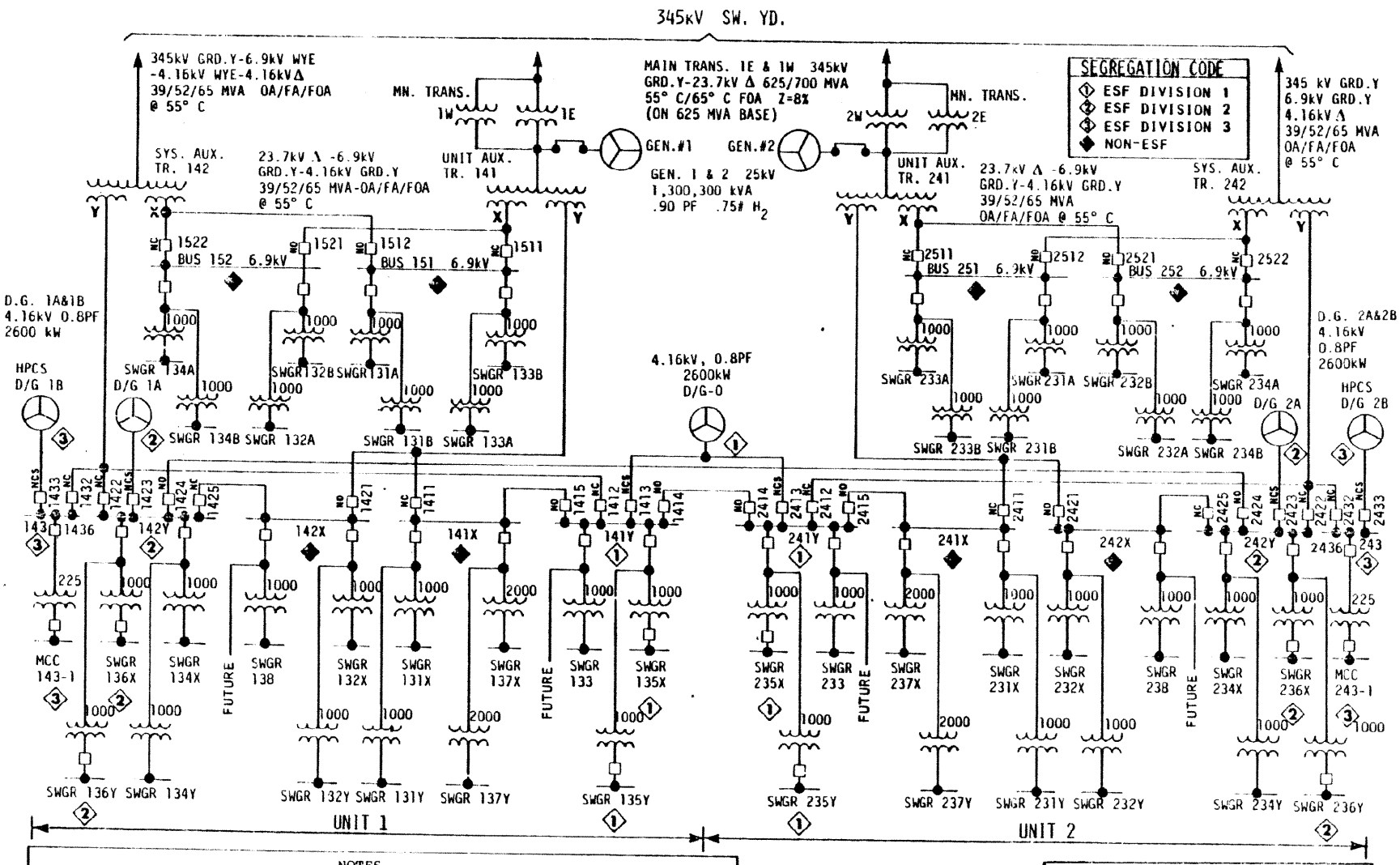

NOTES

NOS. NEAR THE TRANSF. ARE kVA RATINGS
REF. SINGLE-LINE DIAG. DWG. 1E-1-4000 A THRU E (FOR INFORMATION ONLY)
NO-NORMALLY OPEN; NC-NORMALLY CLOSED; NCS-NORMALLY CLSD. @ STDBY. PWR. OPER.

LA SALLE COUNTY STATION
UPDATED FINAL SAFETY ANALYSIS REPORT

FIGURE 8.1-3

ONE-LINE DIAGRAM - STATION AUXILIARY POWER DISTRIBUTION SYSTEM

REV. 0 - APRIL 1984

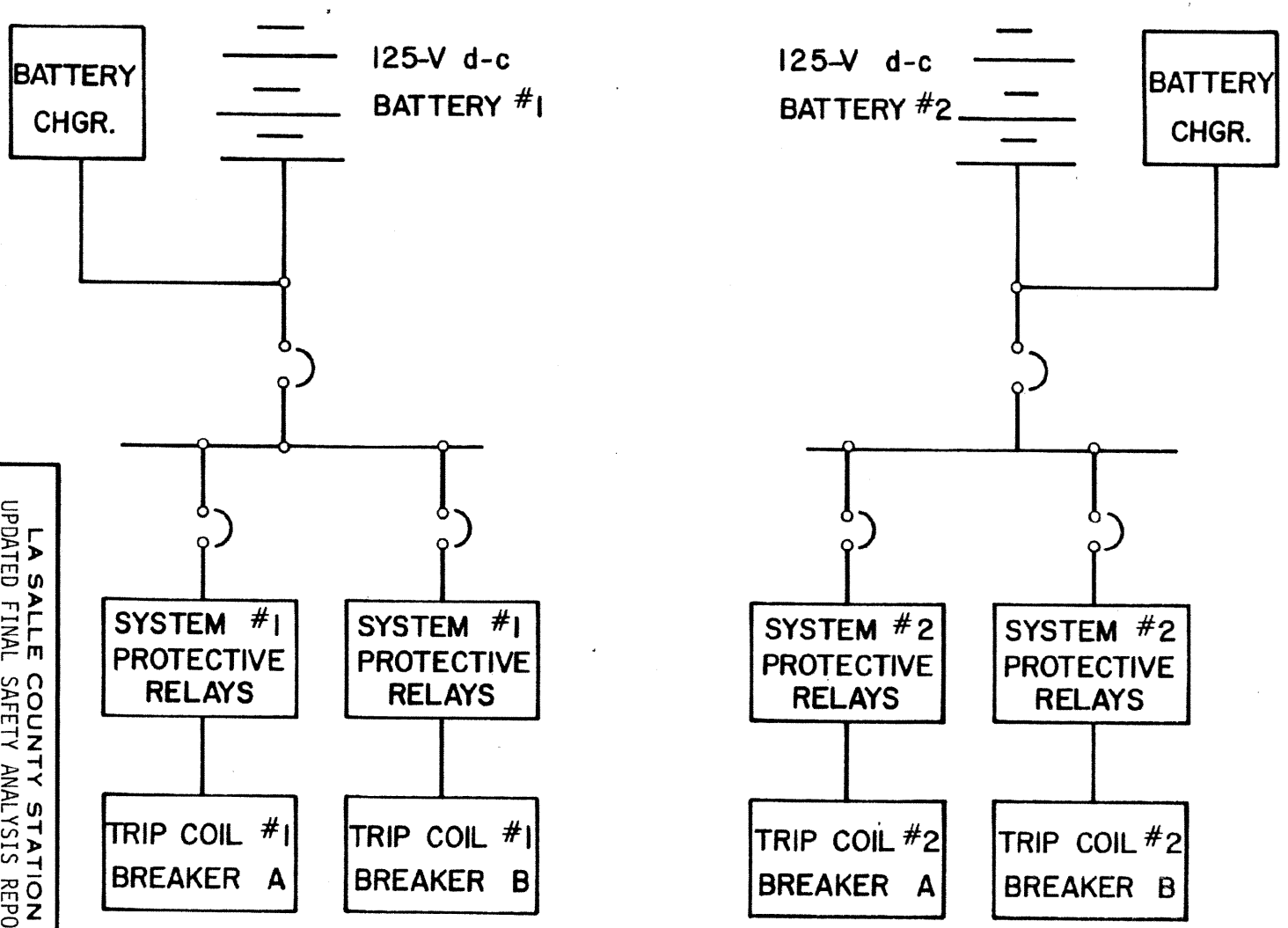

LA SALLE COUNTY STATION
UPDATED FINAL SAFETY ANALYSIS REPORT

FIGURE 8.1-4

DIAGRAM OF SWITCHYARD d-c CONTROL SYSTEM

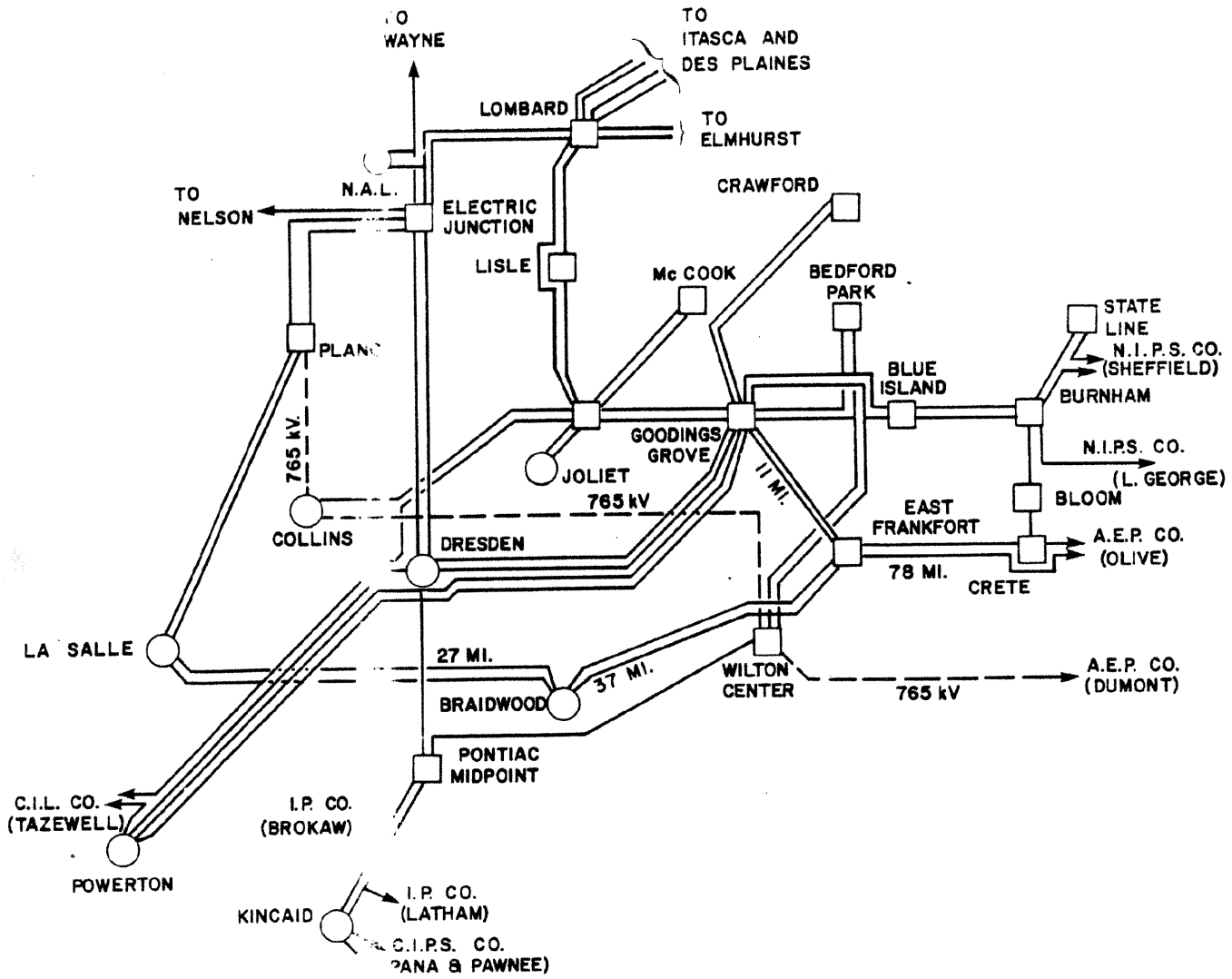

LA SALLE COUNTY STATION
UPDATED FINAL SAFETY ANALYSIS REPORT

FIGURE 8.2-1

TRANSMISSION SYSTEM INTERCONNECTIONS
1981 CONDITIONS

REV. 0 - APRIL 1984

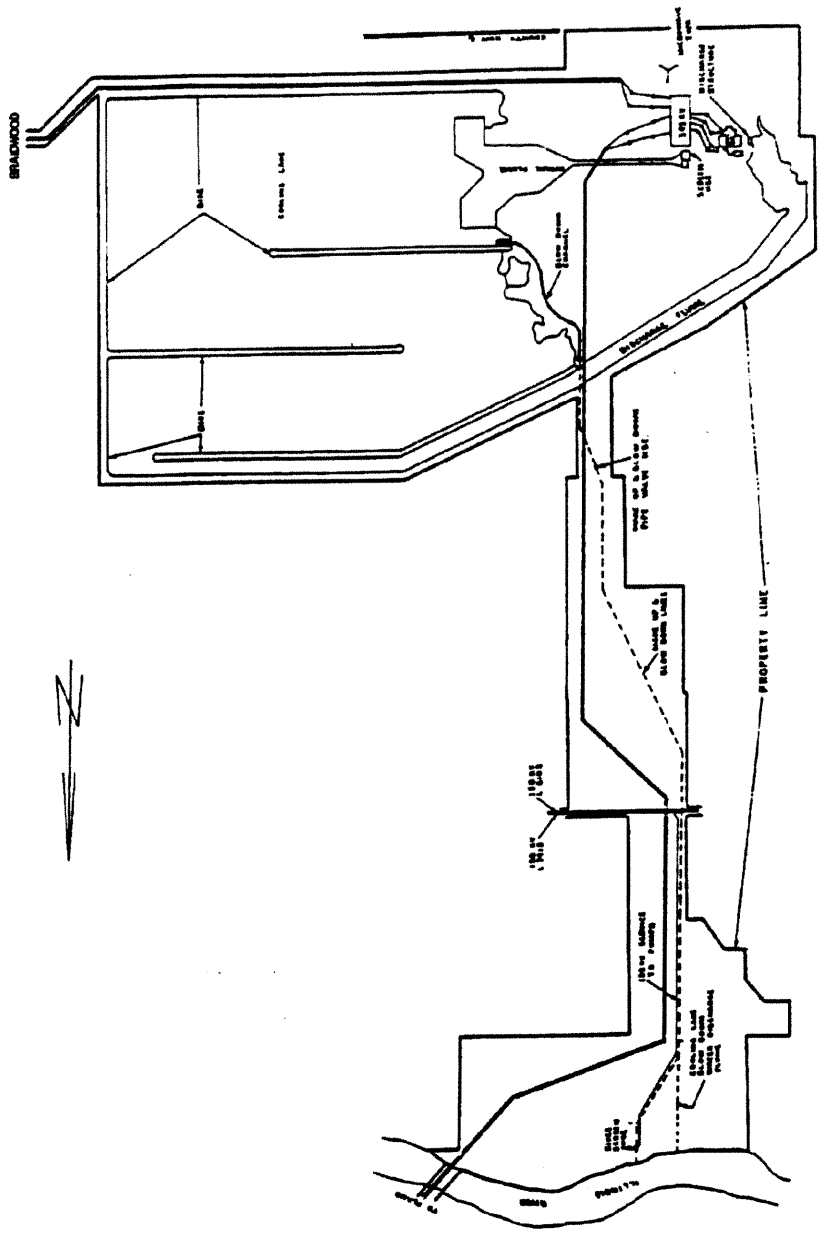

LASALLE COUNTY STATION UPDATED FINAL SAFETY ANALYSIS REPORT
FIGURE 8.2-2 PROPERTY PLAN

TRANSMISSION LINE CROSSOVERS

LA SALLE COUNTY STATION

(La Salle – Plano Right-of-Way)

① Over 138 Kv. Lines 6102 & 7413

(La Salle – East Frankfort Right-of-Way)

② Over 345 Kv. Lines 0301, 0302, 0303, & 10805

③ Over 345 Kv. Line 8014

④ Over 138 Kv. Line 1207

⑤ Under 765 Kv. Line 11216

⑥ Over 138 Kv. Line 0901

⑦ Near 138 Kv. Lines 11608 & 11613

⑧ Over 138 Kv. Line 0902

⑨ Over 138 Kv. Lines 0901 & 0902

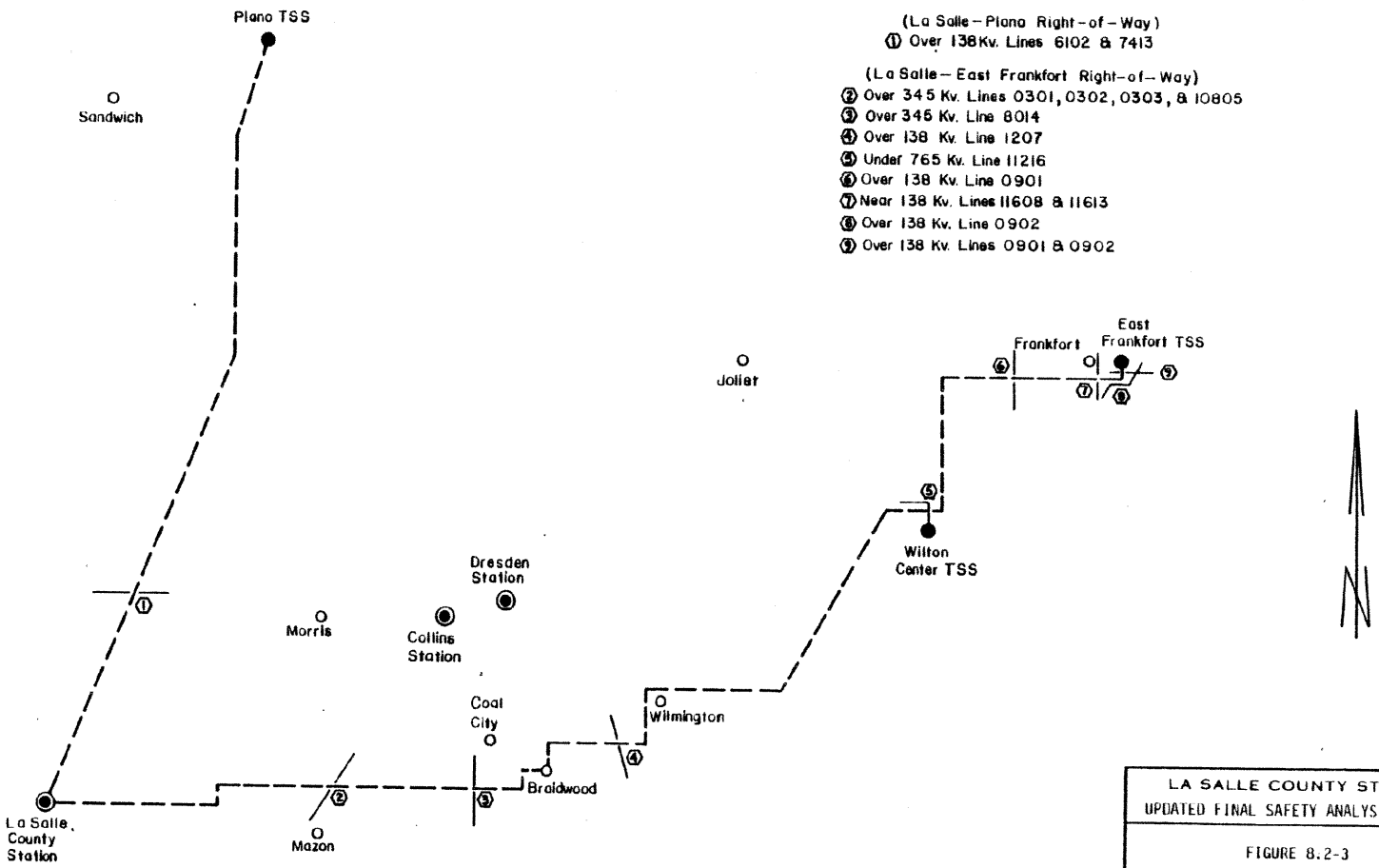

LA SALLE COUNTY STATION
UPDATED FINAL SAFETY ANALYSIS REPORT

FIGURE 8.2-3

ROUTING OF TRANSMISSION CORRIDORS
1981 CONDITIONS

REV. 0 - APRIL 1984

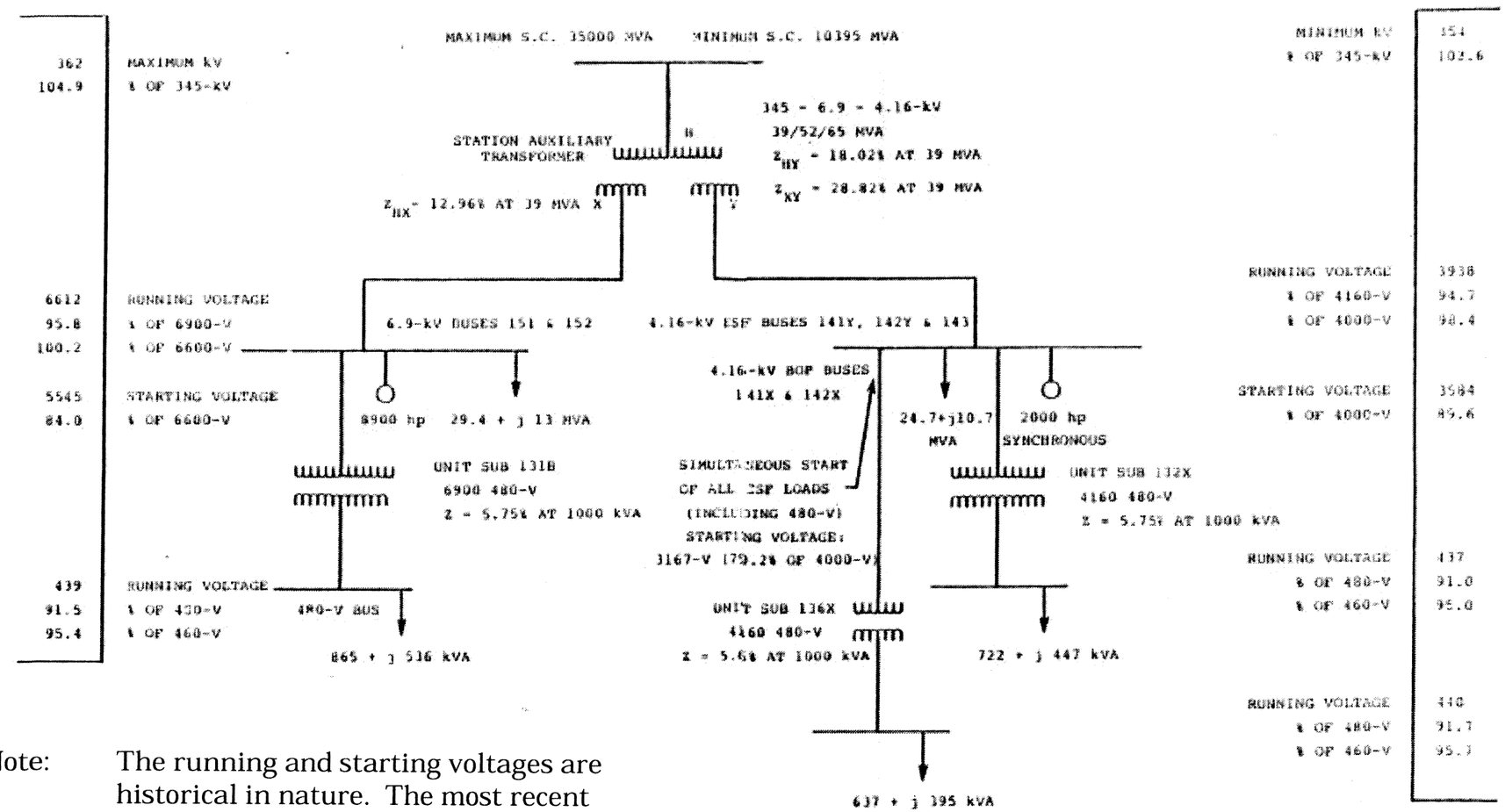

Note: The running and starting voltages are historical in nature. The most recent voltage values are provided in the latest AC auxiliary power system evaluation.

LA SALLE COUNTY STATION
UPDATED FINAL SAFETY ANALYSIS REPORT

FIGURE 8.2-4

MINIMUM CALCULATED RUNNING VOLTAGES AND MINIMUM STARTING BUS VOLTAGES

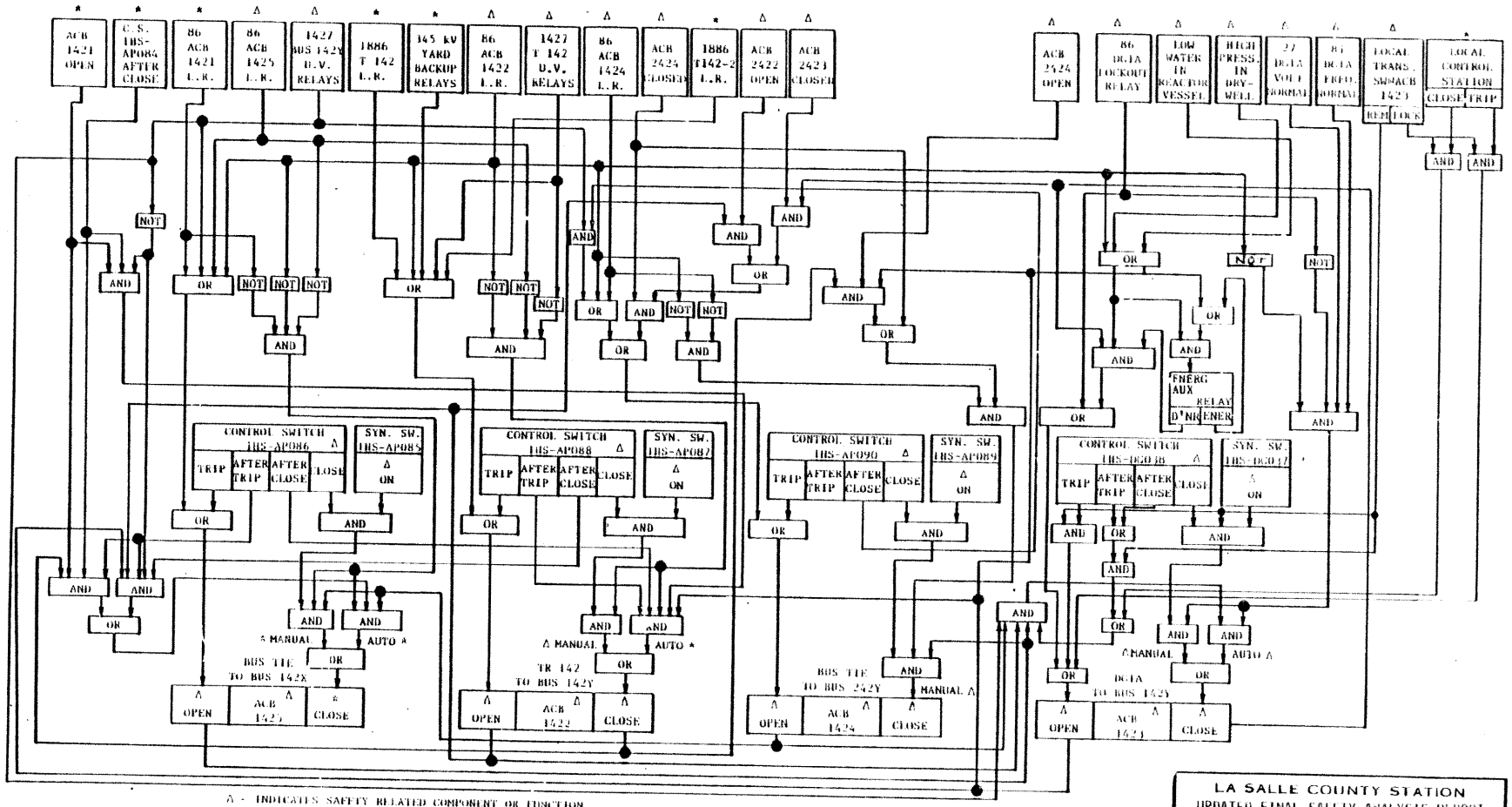

Δ - INDICATES SAFETY RELATED COMPONENT OR FUNCTION

* - INDICATES NON-SAFETY RELATED COMPONENT OR FUNCTION

C.S. - CONTROL SWITCH

L.R. - LOCKOUT RELAY

LA SALLE COUNTY STATION
UPDATED FINAL SAFETY ANALYSIS REPORT

FIGURE 8.3-1

BLOCK DIAGRAM RELAY AND CONTROL BUS 142Y, DGIA

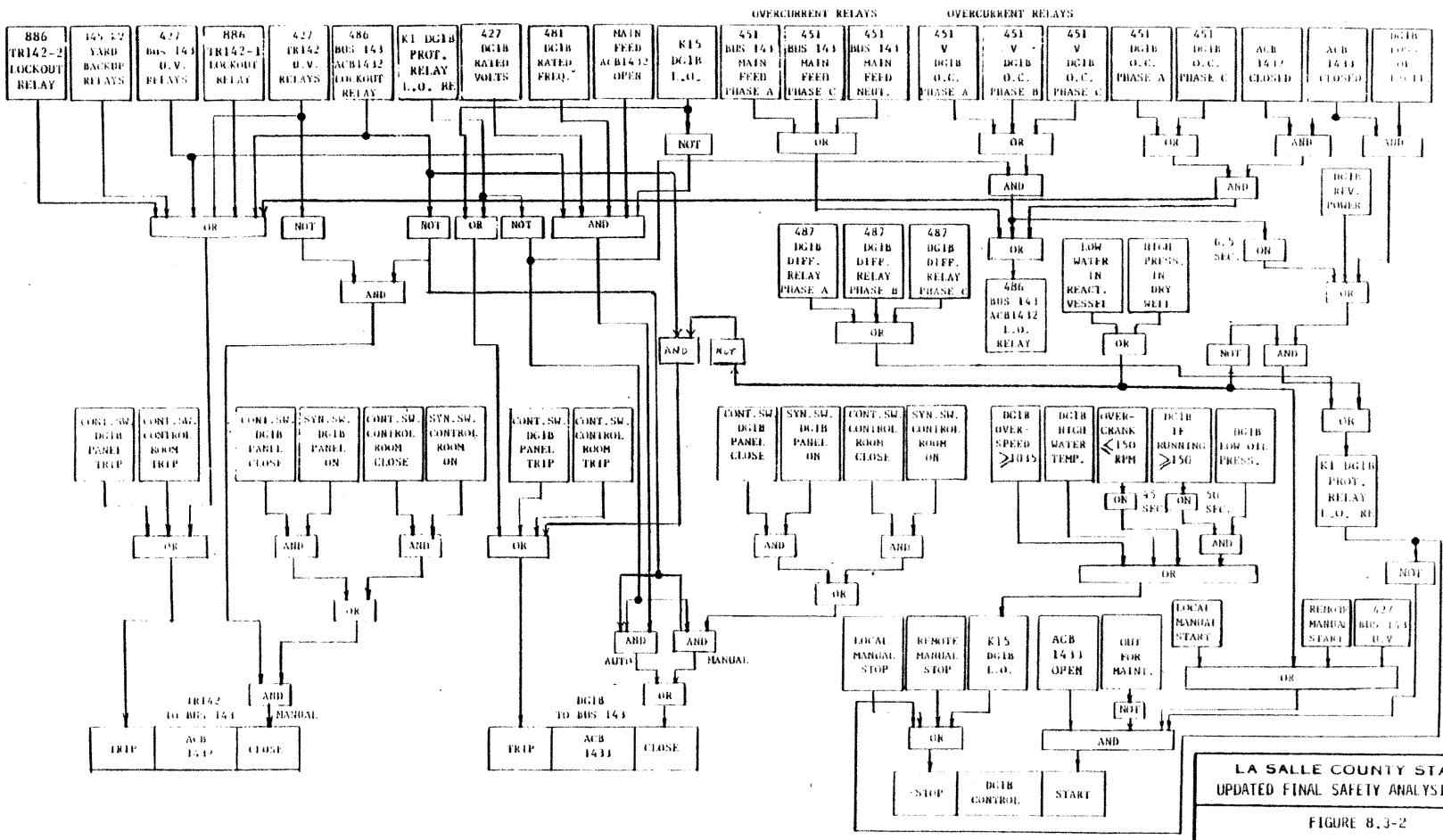

LA SALLE COUNTY STATION
UPDATED FINAL SAFETY ANALYSIS REPORT

FIGURE 8.3-2

BLOCK-LOGIC DIAGRAM:
BUS 143, TRANSFORMER 142,
DIESEL GENERATOR 1B

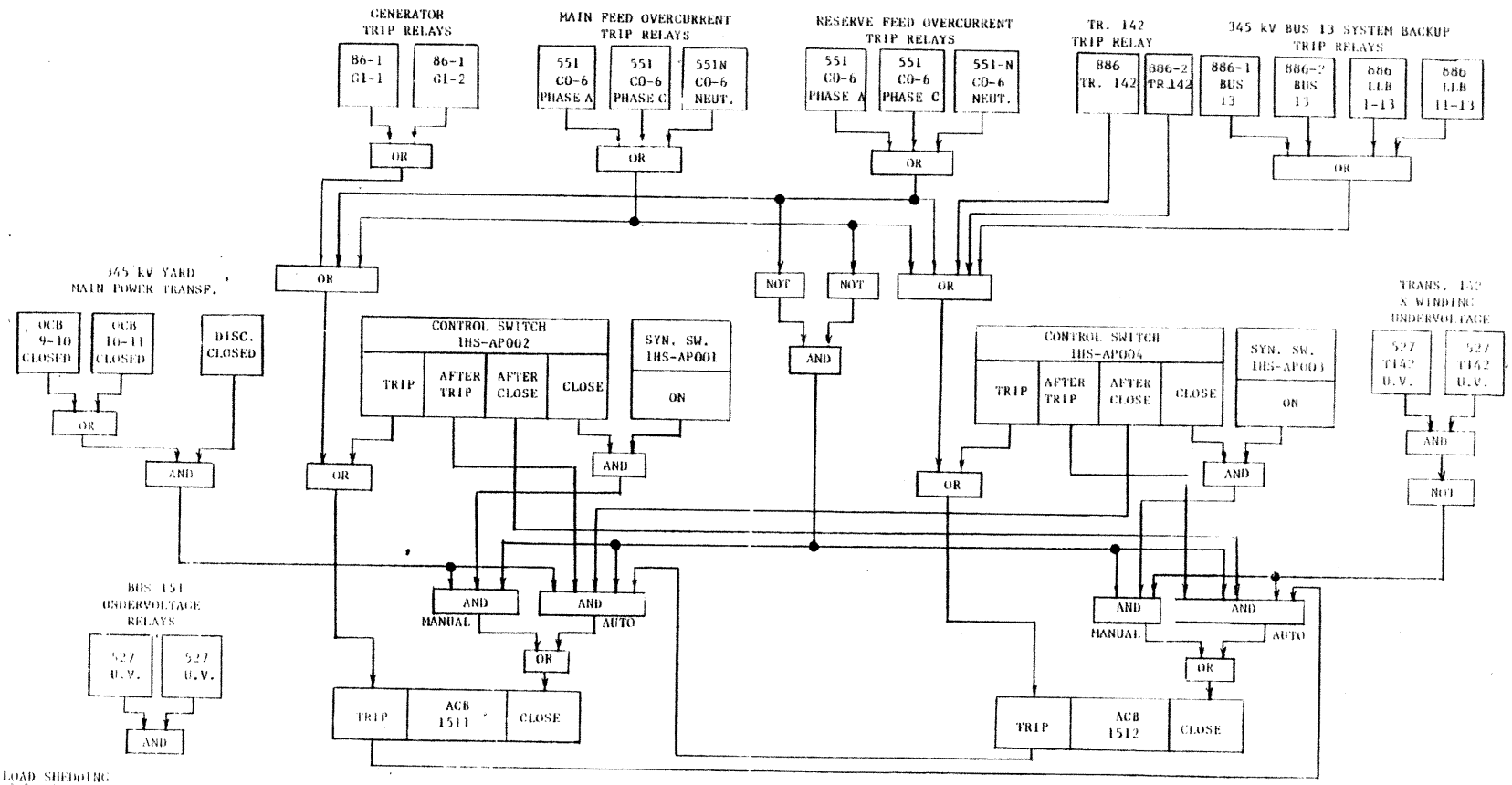

LOAD SHEDDING

TRIP: Reactor Recirc. Pump 1A
TRIP: Electrode Boiler 0A
TRIP: Condensate & Cond. Booster Pump 1A
TRIP: Condensate & Cond. Booster Pump 1C
TRIP: Inerting Steam Electrode Boiler 1A
Actuate Low-Voltage Alarm

NOTE: U.V. relays on Bus 151 are set to operate at lower voltage than U.V. relays on "X" winding of TR. 142.

LA SALLE COUNTY STATION
UPDATED FINAL SAFETY ANALYSIS REPORT

FIGURE 8.3-3

BLOCK DIAGRAM RELAY AND CONTROL BUS 151 (TYPICAL)

REV. 0 - APRIL 1984

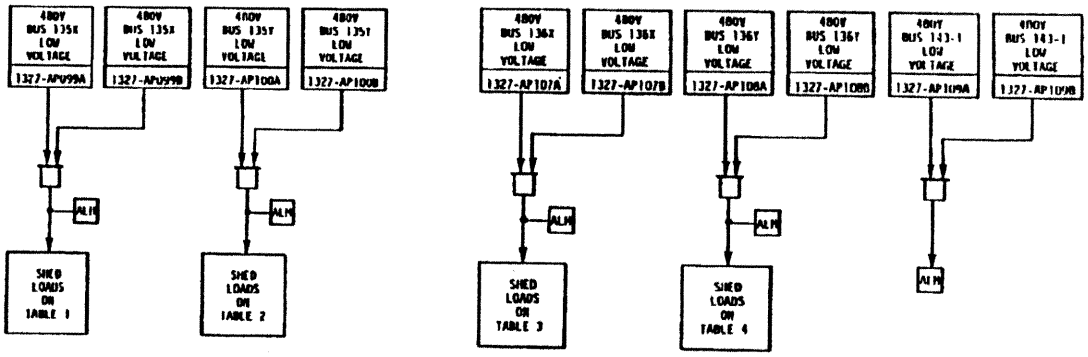

TABLE 1

1. RHR SERV WTR PUMP 1A
2. DG-0 COOLING WTR PUMP

TABLE 2

1. RHR SERV WTR PUMP 1B
2. PRI. CONTAINMENT VENT SUPPLY FAN 1A
3. CLEANUP RECIRC PUMP 1A
4. FUEL POOL EMERG. MAKEUP PUMP 1A

TABLE 3

1. RHR SERV WTR PUMP 1C
2. DG-1A COOLING WTR PUMP
3. AUX EQPT RM AIR COOLED COND FAN 0A
4. AUX EQPT RM SUPPLY FAN 0A

TABLE 4

1. RHR SERV WTR PUMP 1D
2. PRI. CONTAINMENT VENT SUPPLY FAN 1B
3. FUEL POOL EMERG. MAKEUP PUMP 1B
4. CONT RM AIR COOLED COND FAN 0A
5. TURBINE BUILDING 480V MCC 136Y-3

LASALLE COUNTY STATION
UPDATED FINAL SAFETY ANALYSIS REPORT

FIGURE 8.3-4

LOAD SHEDDING INITIATED BY UNDERVOLTAGE FOR 480-VOLT ESF BUSES 135X, 135Y, 136Y AND 143

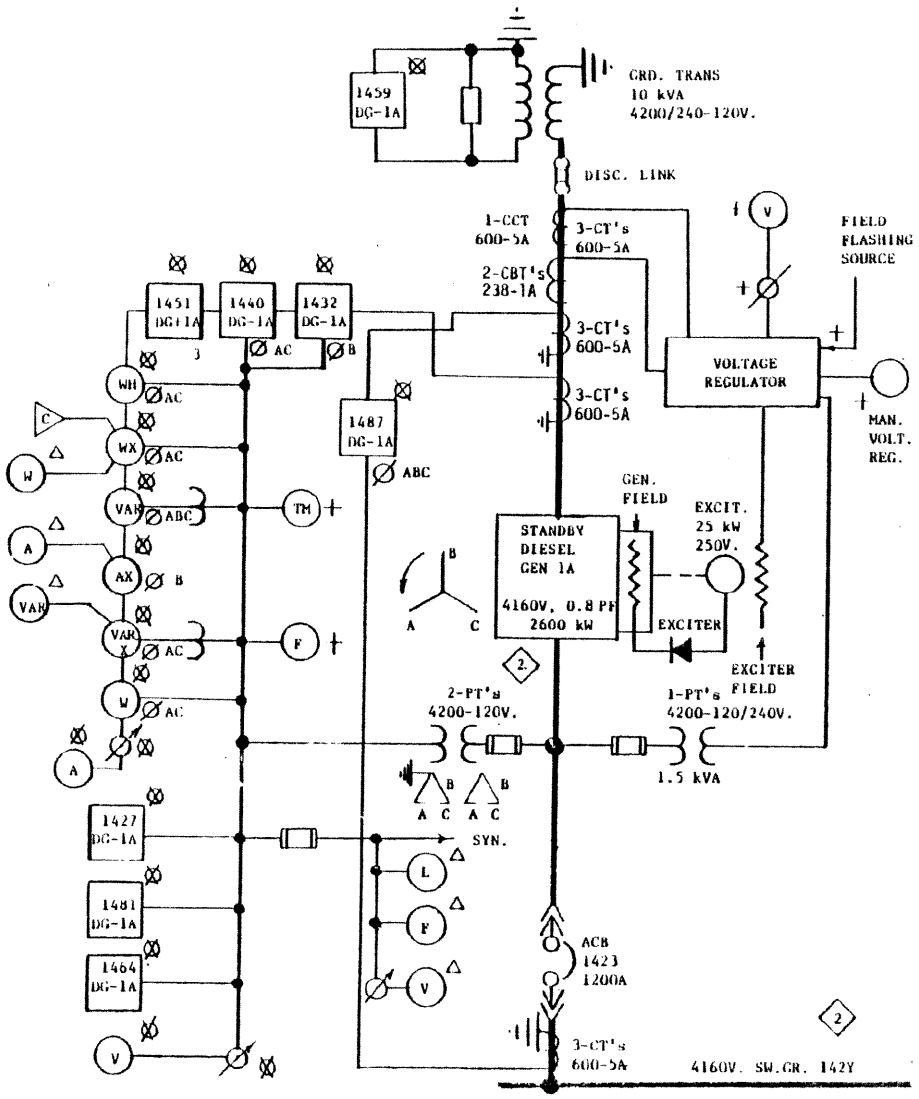

RELAY SCHEDULE

DEVICE	FUNCTION
59N	Over Voltage Relay (D.G.)
-32DG 1A	Reverse Power Relay
-40, DG-1A	Loss of Field Relay
-51	Overcurrent Relay
-59DG-1A	Diesel Gen. Neutral Overvoltage Relay
-64DG-1A	Field Gnd. Relay
-81	Under Frequency Relay
-87DG-1A	Diesel Gen. Differential Relay

INSTRUMENTATION LEGEND

SYMBOL	DESCRIPTION
A	Ammeter
V	Voltmeter
W	Wattmeter
WH	Watt Hourmeter
F	Frequency Meter
VAR	Varmeter
VAR X	Var Transducer
AX	Current Transducer
WX	Watt Transducer
L	Pot. Ind. Light
TM	Elapsed Time Meter
C	Computer Input
Ø	Instrument Switch

DEVICE LOCATION

SYMBOL	LOCATION
△	At Elect. Cont. Bd. (1PM01J)
+	At Local Panel
Ø	At D/G Relay Panel

LA SALLE COUNTY STATION
UPDATED FINAL SAFETY ANALYSIS REPORT

FIGURE 8.3-5

SINGLE-LINE DIAGRAM RELAY AND METERING DIESEL GENERATOR

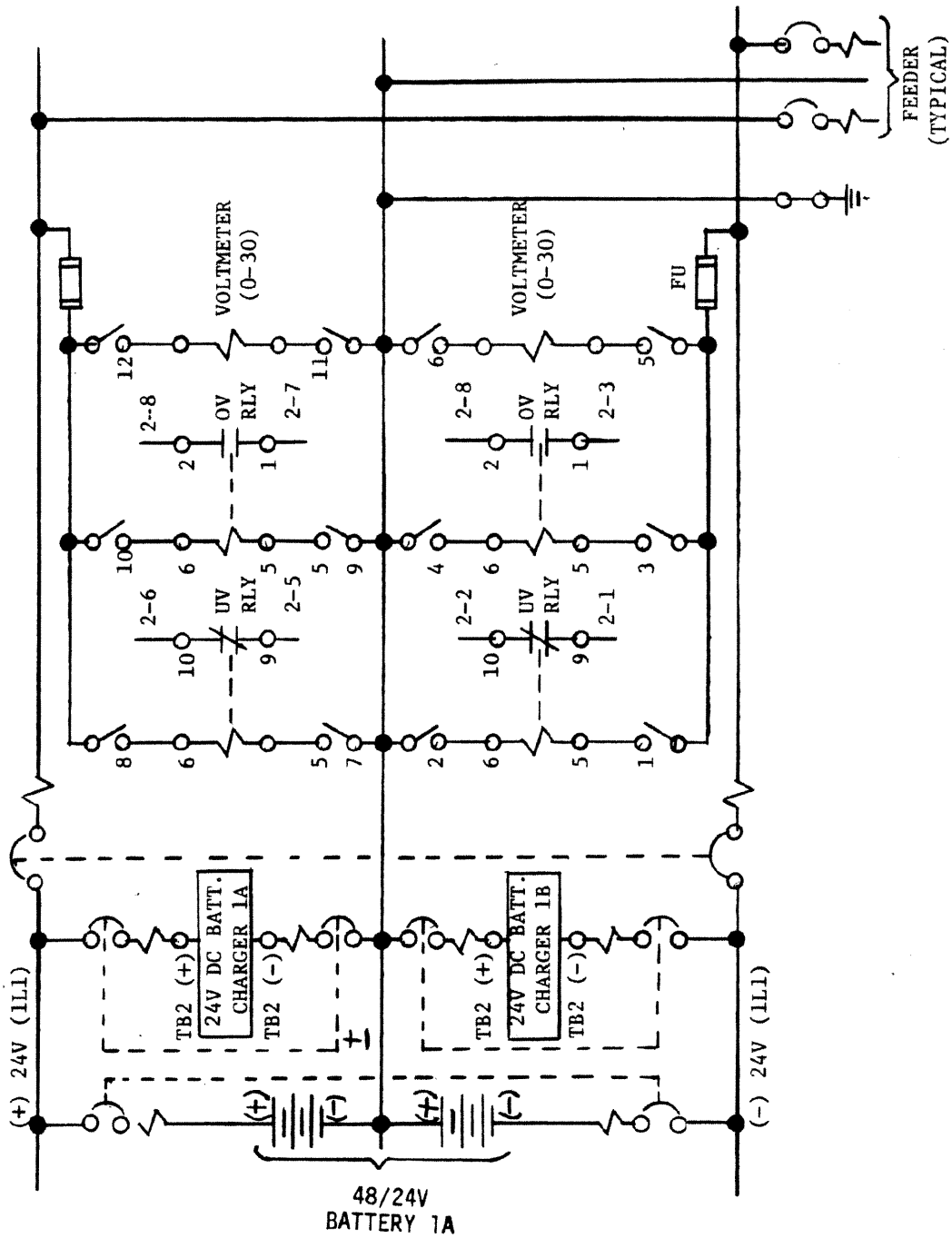

LA SALLE COUNTY STATION
UPDATED FINAL SAFETY ANALYSIS REPORT

FIGURE 8.3-6

48/24-Vdc #1 UNIT 1

REV. 0 - APRIL 1984

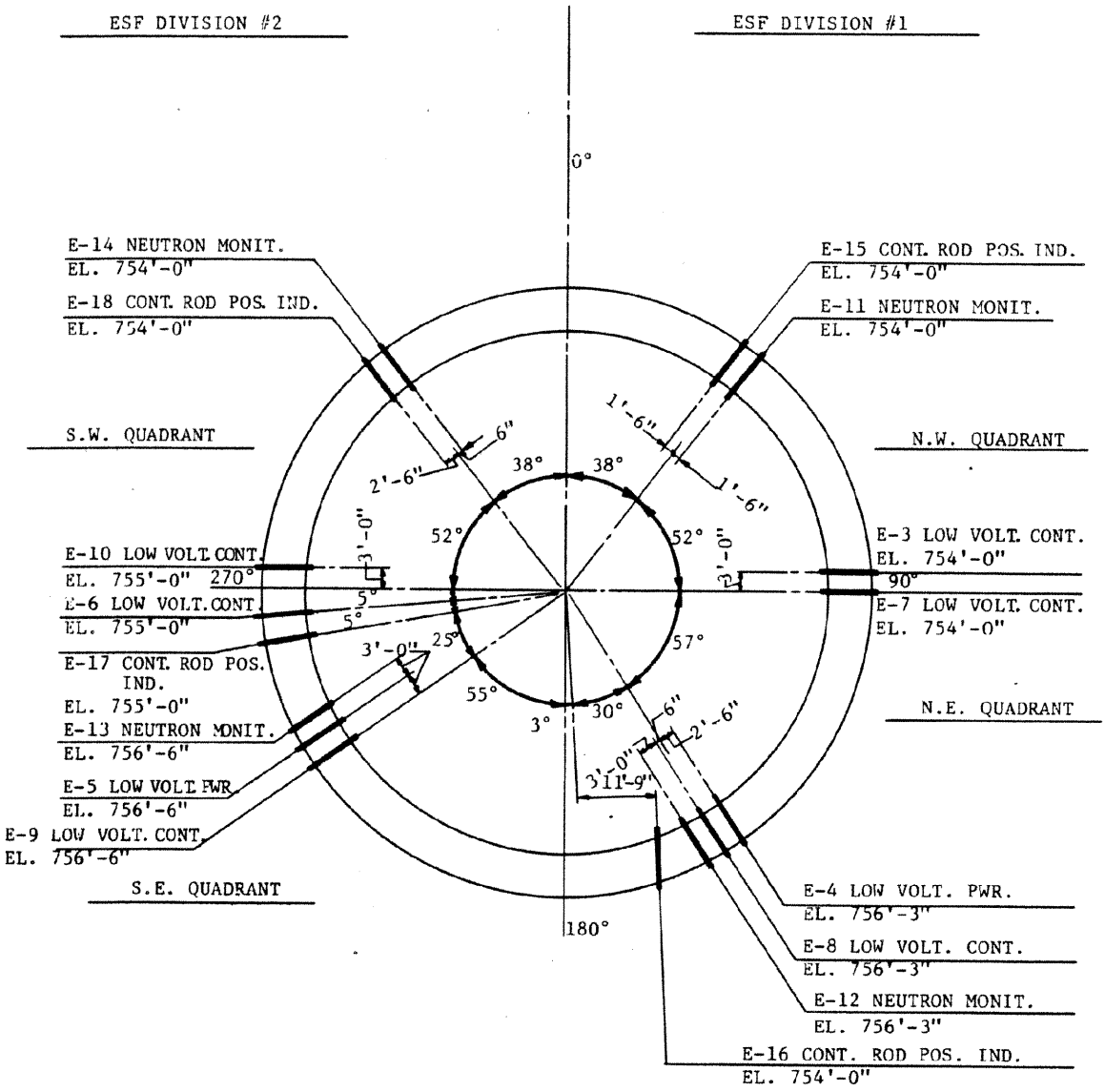

LA SALLE COUNTY STATION
UPDATED FINAL SAFETY ANALYSIS REPORT

FIGURE 8.3-7

ELECTRICAL DRYWELL PENETRATIONS
PLAN EL. 740 FT 0 IN.

REV. 0 - APRIL 1984

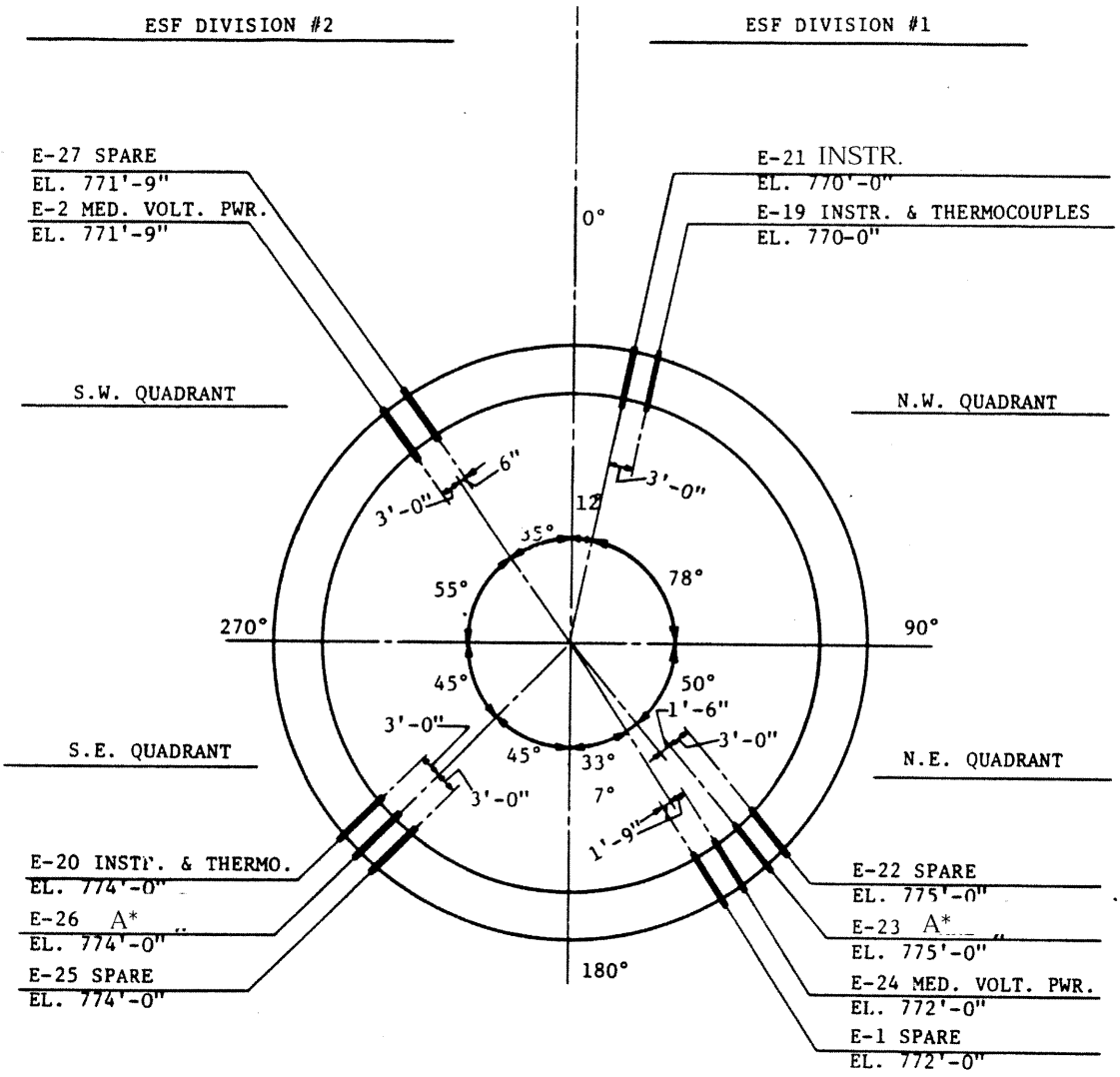

A* Unit 1 - Spare, Unit 2 INSTR.

LASALLE COUNTY STATION
UPDATED FINAL SAFETY ANALYSIS REPORT

FIGURE 8.3-8
ELECTRICAL DRYWELL PENETRATIONS
PLAN EL. 761 FT 0 IN.

KEY

S = Current Shunt
V = Voltmeter
A = Ammeter
UV = Undervoltage Relay
L = Located at Battery Charger or Bus Distribution/ Instrumentation Panel
R = Located on Control Room Panel 1(2)PM01J
Ø = Selector Switch

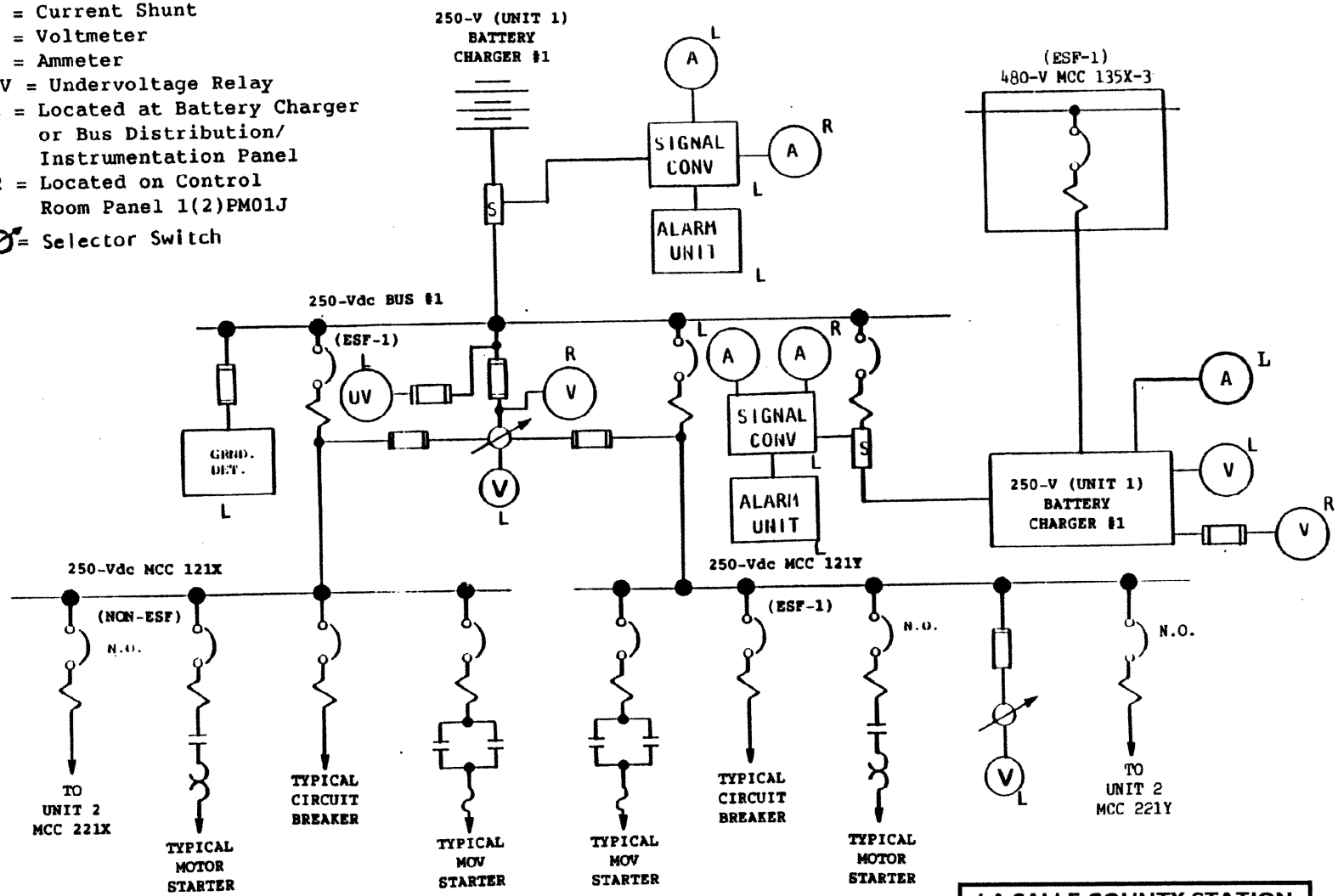

LA SALLE COUNTY STATION
UPDATED FINAL SAFETY ANALYSIS REPORT

FIGURE 8.3-9

250 Vdc Engineered Safety Feature
Division I - Unit I

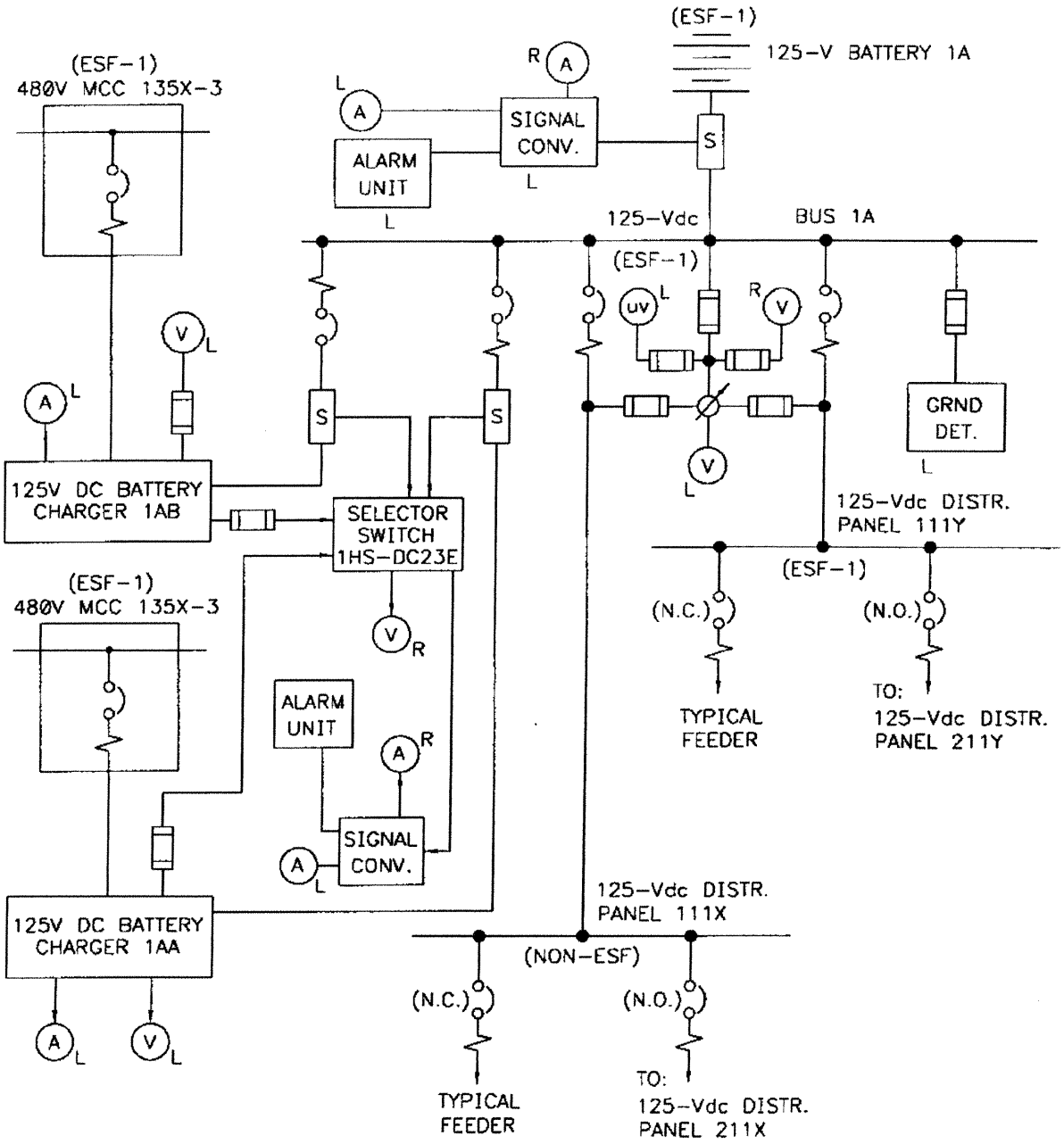

KEY: SAME AS FIGURE 8.3-9

LASALLE COUNTY STATION UPDATED FINAL SAFETY ANALYSIS REPORT
FIGURE 8.3-10 125-Vdc ENGINEERED SAFETY FEATURE DIVISION 1 - UNIT 1

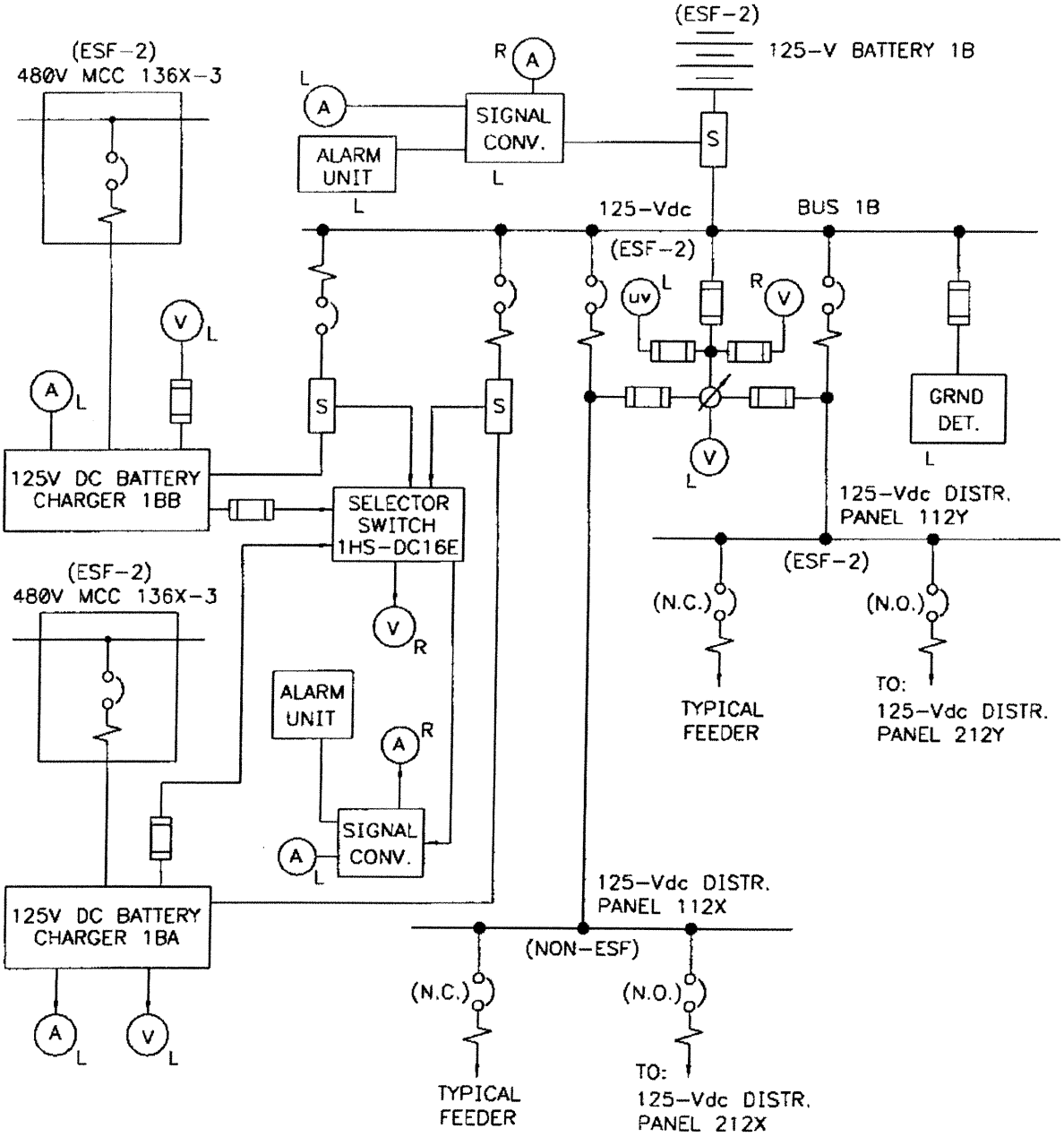

KEY: SAME AS FIGURE 8.3-9

LASALLE COUNTY STATION UPDATED FINAL SAFETY ANALYSIS REPORT
FIGURE 8.3-11 125-Vdc ENGINEERED SAFETY FEATURE DIVISION 2 - UNIT 1

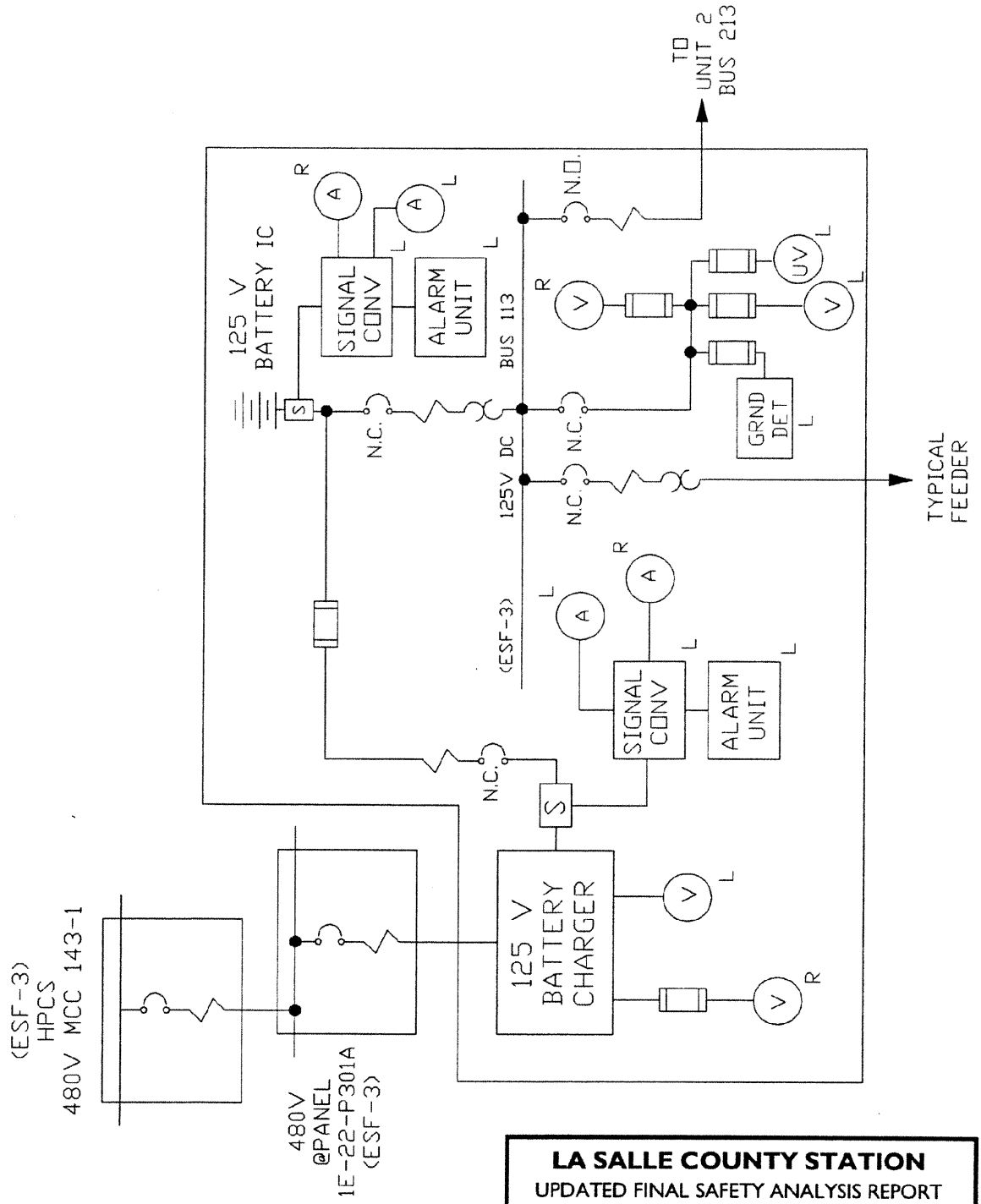

LA SALLE COUNTY STATION
UPDATED FINAL SAFETY ANALYSIS REPORT

FIGURE 8.3-12

125 Vdc Engineered Safety Feature
Division 3 - Unit 1

KEY:
Same as Figure 8.3-9 except that remote instruments are located on control room panel 1(2)H13-P601