ATTACHMENT 12

Off-Site Dose Calculation Manual (ODCM)

Constellation Energy
Nine Mile Point Nuclear Station

NINE MILE POINT NUCLEAR STATION

NINE MILE POINT UNIT 2

OFF-SITE DOSE CALCULATION MANUAL (ODCM)

ORIGINAL

APPROVALS	SIGNATURES	DATE REVISION 30
Prepared by:	G. R. Stinson Principle Chemist	9/17/07
Reviewed by:	C. L. Widay Supervisor – Chemistry Support	9/17/07
Concurred by:	M. R. Faivus General Supervisor Chemistry	9-17-07

Controlled Document Copy
For Latest Information
Check CDS

G. J. Laughlin	Manger Engineering Services	9-18-07
M. A. Schimmel	Plant General Manager	9.18.07

SUMMARY OF REVISIONS

Revision 30 (Effective September XXX, 2007)

PAGE	***DATE***
I 3.3-13,14	August 2000
I 3.3-6	November 2000
I 4.0-1	November 2000
II 2-10,26,33-36,66,67,75,80	November 2000
ix, I 1.0-1, I 1.0-2, I B 3.3-2, I 4.1-1 & 1a, II 11, II 15, II 29, II 63, II 107, II 108	December 2001
I 3.3-9	December 2002
I 3.3-10	March 2003
I 3.3-7, I 3.3-12, and I 3.3-13	January 2004
II 63, II 64, and II 107	December 2005
II 3 and II 4	May 2006
iv, I 1.0-1, I 3.1-7, I 3.2-3, I 3.2-10, I 3.2-12, I 3.3-1, I 3.3-2, I 3.3-3, I 3.3-7, I 3.3-8, I 3.3-9, I 3.3-10, I B 3.1-3, I B 3.2-5, I B 3.2-6, I B 3.3-1, I B 3.3-2, I 4.1-1a, II 10, II 13, II 20, and II 23	September 2006
II 12, II 15, II 16	September 2007
II 16	September 2007

TABLE OF CONTENTS

		PAGE
List of Tables		vii
List of Figures		ix
Introduction		x
PART I – RADIOLOGICAL EFFLUENT CONTROLS		I
SECTION 1.0	DEFINITIONS	I 1.0-0
SECTION 2.0	Not Used	
SECTION 3.0	APPLICABILITY	I 3.0-0
D 3.1	Radioactive Liquid Effluents	I 3.1-1
D 3.1.1	Liquid Effluents Concentration	I 3.1-1
D 3.1.2	Liquid Effluents Dose	I 3.1-4
D 3.1.3	Liquid Radwaste Treatment System	I 3.1-7
D 3.2	Radioactive Gaseous Effluents	I 3.2-1
D 3.2.1	Gaseous Effluents Dose Rate	I 3.2-1
D 3.2.2	Gaseous Effluents Noble Gas Dose	I 3-2-4
D 3.2.3	Gaseous Effluents Dose – Iodine-131, Iodine-133, Tritium, and Radioactive Material in Particulate Form	I 3.2-7
D 3.2.4	Gaseous Radwaste Treatment System	I 3.2-10
D 3.2.5	Ventilation Exhaust Treatment System	I 3.2-12
D 3.2.6	Venting or Purging	I 3.2-14
D 3.3	Instrumentation	I 3.3-1
D 3.3.1	Radioactive Liquid Effluent Monitoring Instrumentation	I 3.3-1
D 3.3.2	Radioactive Gaseous Effluent Monitoring Instrumentation	I 3.3-7
D 3.4	Radioactive Effluents Total Dose	I 3.4-1
D 3.5	Radiological Environmental Monitoring	I 3.5-1
D 3.5.1	Monitoring Program	I 3.5-1
D 3.5.2	Land Use Census	I 3.5-13
D 3.5.3	Interlaboratory Comparison Program	I 3.5-16
BASES		I B 3.1-0
B 3.1	Radioactive Liquid Effluents	I B 3.1-1
B 3.1.1	Liquid Effluents Concentration	I B 3.1-1
B 3.1.2	Liquid Effluents Dose	I B 3.1-2
B 3.1.3	Liquid Radwaste Treatment System	I B 3.1-3

TABLE OF CONTENTS (Cont)

		PAGE
B 3.2	Radioactive Gaseous Effluents	I B 3.2-1
B 3.2.1	Gaseous Effluents Dose Rate	I B 3.2-1
B 3.2.2	Gaseous Effluents Noble Gas Dose	I B 3-2-2
B 3.2.3	Gaseous Effluents Dose – Iodine-131, Iodine-133, Tritium, and Radioactive Material in Particulate Form	I B 3.2-3
B 3.2.4	Gaseous Radwaste Treatment System	I B 3.2-5
B 3.2.5	Ventilation Exhaust Treatment System	I B 3.2-6
B 3.2.6	Venting or Purging	I B 3.2-7
B 3.3	Instrumentation	I B 3.3-1
B 3.3.1	Radioactive Liquid Effluent Monitoring Instrumentation	I B 3.3-1
B 3.3.2	Radioactive Gaseous Effluent Monitoring Instrumentation	I B 3.3-2
B 3.4	Radioactive Effluents Total Dose	I B 3.4-1
B 3.5	Radiological Environmental Monitoring	I B 3.5-1
B 3.5.1	Monitoring Program	I B 3.5-1
B 3.5.2	Land Use Census	I B 3.5-2
B 3.5.3	Interlaboratory Comparison Program	I B 3.5-3
SECTION 4.0	ADMINISTRATIVE CONTROLS	I 4.0-1
D 4.1	Reporting Requirements	I 4.1-1
D 4.1.1	Special Reports	I 4.1-1
D 4.2	Major Changes to Liquid, Gaseous and Solid Radwaste Treatment Systems	I 4.2-1

TABLE OF CONTENTS (Cont)

SECTION	*SUBJECT*	*REF SECTION*	*PAGE*
PART II – CALCULATIONAL METHODOLOGIES			II 1
1.0	LIQUID EFFLUENTS		II 2
1.1	Liquid Effluent Monitor Alarm Setpoints		II 2
1.1.1	Basis	3.1.1	II 2
1.1.2	Setpoint Determination Methodology	3.3.1	II 2
1.1.2.1	Liquid Radwaste Effluent Radiation Alarm Setpoint		II 2
1.1.2.2	Contaminated Dilution Water Radwaste Effluent Monitor Alarm Setpoint Calculations		II 5
1.1.2.3	Service Water and Cooling Tower Blowdown Effluent Radiation Alarm Setpoint		II 6
1.2	Liquid Effluent Concentration Calculation	3.1.1 DSR 3.1.1.2	II 7
1.3	Liquid Effluent Dose Calculation Methodology	3.1.2 DSR 3.1.2.1	II 8
1.4	Liquid Effluent Sampling Representativeness	Table D 3.1.1-1 note b	II 9
1.5	Liquid Radwaste System FUNCTIONALITY	3.1.3 DSR 3.1.3.1 B 3.1.3	II 10
2.0	GASEOUS EFFLUENTS		II 12
2.1	Gaseous Effluent Monitor Alarm Setpoints		II 12
2.1.1	Basis	3.2.1	II 12
2.1.2	Setpoint Determination Methodology Discussion	3.3.2	II 12
2.1.2.1	Stack Noble Gas Detector Alarm Setpoint Equation		II 13
2.1.2.2	Vent Noble Gas Detector Alarm Setpoint Equation		II 14
2.1.2.3	Offgas Pretreatment Noble Gas Detector Alarm Setpoint Equation		II 15
2.2	Gaseous Effluent Dose Rate Calculation Methodology	3.2.1	II 16
2.2.1	X/Q and W_v - Dispersion Parameters for Dose Rate, Table D 3-23		II 16
2.2.2	Whole Body Dose Rate Due to Noble Gases	DLCO 3.2.1.a DSR 3.2.1.1	II 17
2.2.3	Skin Dose Rate Due to Noble Gases	DLCO 3.2.1.a DSR 3.2.1.1	II 18

TABLE OF CONTENTS (Cont)

SECTION	*SUBJECT*	*REF SECTION*	*PAGE*
2.2.4	Organ Dose Rate Due to I-131, I-133, Tritium and Particulates with half-lives greater than 8 days	DLCO 3.2.1.b DSR 3.2.1.2	II 19
2.3	Gaseous Effluent Dose Calculation Methodology	3.2.2 3.2.3 3.2.5	II 20
2.3.1	W_s and W_v - Dispersion Parameters For Dose, Table D 3-23		II 20
2.3.2	Gamma Air Dose Due to Noble Gases	3.2.2 DSR 3.2.2.1	II 21
2.3.3	Beta Air Dose Due to Noble Gases	3.3.2	II 21
2.3.4	Organ Dose Due to I-131, I-133, Tritium and Particulates with half-lives	3.2.3 3.2.5 DSR 3.2.3.1 DSR 3.2.5.1	II 21
2.4	I-133 and I-135 Estimation		II 22
2.5	Isokinetic Sampling		II 22
2.6	Use of Concurrent Meteorological Data vs. Historical Data		II 22
2.7	Gaseous Radwaste Treatment System Operation	3.2.4	II 22
2.8	Ventilation Exhaust Treatment System Operation	3.2.5	II 23
3.0	URANIUM FUEL CYCLE	3.4	II 24
3.1	Evaluation of Doses From Liquid Effluents	DSR 3.1.2.1	II 25
3.2	Evaluation of Doses From Gaseous Effluents	DSR 3.2.2.1	II 26
3.3	Evaluation of Doses From Direct Radiation	DSR 3.2.3.1	II 27
3.4	Doses to Members of the Public Within the Site Boundary	4.1	II 27
4.0	ENVIRONMENTAL MONITORING PROGRAM	3.5	II 30
4.1	Sampling Stations	3.5.1 DSR 3.5.1.1	II 30
4.2	Interlaboratory Comparison Program	DSR 3.5.3.2	II 30
4.3	Capabilities for Thermoluminescent Dosimeters Used for Environmental Measurements		II 31

TABLE OF CONTENTS (Cont)

SECTION	*SUBJECT*	*REF SECTION*	*PAGE*
Appendix A	Liquid Dose Factor Derivation		II 66
Appendix B	Plume Shine Dose Factor Derivation		II 69
Appendix C	Dose Parameters for Iodine 131 and 133, Particulates and Tritium		II 73
Appendix D	Diagrams of Liquid and Gaseous Radwaste Treatment Systems and Monitoring Systems		II 83
Appendix E	Nine Mile Point On-Site and Off-Site Maps		II 106

LIST OF TABLES

PART I - RADIOLOGICAL EFFLUENT CONTROLS

TABLE NO	*TITLE*	*PAGE*
D 3.1.1-1	Radioactive Liquid Waste Sampling and Analysis	I 3.1-2
D 3.2.1-1	Radioactive Gaseous Waste Sampling and Analysis	I 3.2-2
D 3.3.1-1	Radioactive Liquid Effluent Monitoring Instrumentation	I 3.3-6
D 3.3.2-1	Radioactive Gaseous Effluent Monitoring Instrumentation	I 3.3-13
D 3.5.1-1	Radiological Environmental Monitoring Program	I 3.5-6
D 3.5.1-2	Reporting Levels for Radioactivity Concentrations in Environmental Samples	I 3.5-10
D 3.5.1-3	Detection Capabilities for Environmental Sample Analyses	I 3.5-11

LIST OF TABLES (Cont)

PART II – CALCULATIONAL METHODOLOGIES

TABLE NO	*TITLE*	*PAGE*
D 2-1	Liquid Effluent Detector Response	II 33
D 2-2 thru D 2-5	A_{iat} Values - Liquid Effluent Dose Factor	II 34
D 3-1	Offgas Pretreatment Detector Response	II 38
D 3-2	Finite Plume - Ground Level Dose Factors from an Elevated Release	II 39
D 3-3	Immersion Dose Factors	II 40
D 3-4 thru D 3-22	Dose And Dose Rate Factors, R_i	II 41
D 3-23	Dispersion Parameters at Controlling Locations, X/Q, W_v and W_s Values	II 60
D 3-24	Parameters For the Evaluation of Doses to Real Members of the Public From Gaseous And Liquid Effluents	II 61
D 5.1	Radiological Environmental Monitoring Program Sampling Locations	II 62

LIST OF FIGURES

FIGURE NO	*TITLE*	*PAGE*
D 1.0-1	Site Area and Land Portion of Exclusion Area Boundaries	I 1.0-4
D 5.1-1	Nine Mile Point On-Site Map	II 107
D 5.1-2	Nine Mile Point Off-Site Map (page 1 of 2)	II 108
D 5.1-2	Nine Mile Point Off-Site Map (page 2 of 2)	II 109

INTRODUCTION

The OFFSITE DOSE CALCULATION MANUAL (ODCM) is a supporting document of the Technical Specifications Section 5.5.1. The previous Limiting Conditions for Operation that were contained in the Radiological Effluent Technical Specifications are now transferred to the ODCM as Radiological Effluent Controls. The ODCM contains two parts: Radiological Effluent Controls, Part I; and Calculational Methodologies, Part II. Radiological Effluent Controls, Part 1, includes the following: (1) The Radioactive Effluent Controls and Radiological Environmental Monitoring Programs required by Technical Specification 5.5.1 and (2) descriptions of the information that should be included in the Annual Radiological Environmental Operating and Radioactive Effluent Release Reports required by Technical Specifications 5.6.2 and 5.6.3. Calculational Methodologies, Part II, describes the methodology and parameters to be used in the calculation of liquid and gaseous effluent monitoring instrumentation alarm/trip setpoints and the calculation of offsite doses due to radioactive liquid and gaseous effluents. The ODCM also contains a list and graphical description of the specific sample locations for the radiological environmental monitoring program, and liquid and gaseous radwaste treatment system configurations.

The ODCM follows the methodology and models suggested by NUREG-0133 and Regulatory Guide 1.109, Revision 1. Simplifying assumptions have been applied in this manual where applicable to provide a more workable document for implementing the Radiological Effluent Control requirements; this simplified approach will result in a more conservative dose evaluation for determining compliance with regulatory requirements.

The ODCM will be maintained for use as a reference and training document of accepted methodologies and calculations. Changes to the calculation methods or parameters will be incorporated into the ODCM to assure that the ODCM represents the present methodology in all applicable areas. Any changes to the ODCM will be implemented in accordance with Section 5.5.1 of the Technical Specifications.

PART I - RADIOLOGICAL EFFLUENT CONTROLS

PART I - RADIOLOGICAL EFFLUENT CONTROLS

SECTION 1.0 DEFINITIONS

1.0 DEFINITIONS

NOTE

Technical Specifications defined terms and the following additional defined terms appear in capitalized type and are applicable throughout these specifications and bases.

TERM	DEFINITION
FUNCTIONAL (FUNCTIONALITY)	FUNCTIONALITY is an attribute of Structures, Systems, or Components (SSCs) that is not controlled by Technical Specifications. An SSC shall be functional or have functionality when it is capable of performing its specified function as set forth in the Current Licensing Basis (CLB). FUNCTIONALITY does not apply to specified safety functions, but does apply to the ability of non-Technical Specifications SSCs to perform specified support functions.
GASEOUS RADWASTE TREATMENT SYSTEM	A GASEOUS RADWASTE TREATMENT SYSTEM shall be any system designed and installed to reduce radioactive gaseous effluents by collecting offgases from the main condenser evacuation system and providing for delay or holdup for the purpose of reducing the total radioactivity prior to release to the environment.
MEMBER(S) OF THE PUBLIC	MEMBER(S) OF THE PUBLIC shall include all persons who are not occupationally associated with the Nine Mile Point Nuclear Station and James A. FitzPatrick Nuclear Power Plant. This category does not include employees of owners and operators of the Nine Mile Point Nuclear Station and James A. Fitzpatrick Nuclear Power Plant, their contractors or vendors. Also excluded from this category are persons who enter the site to service equipment or to make deliveries. This category does include persons who use portions of the site for recreational, occupational, or other purposes not associated with Nine Mile Point Nuclear Station and James A. FitzPatrick Nuclear Power Plant.
MILK SAMPLING LOCATION	A MILK SAMPLING LOCATION is a location where 10 or more head of milk animals are available for collection of milk samples.

(continued)

1.0 DEFINITIONS (continued)

TERM	DEFINITION
OFFSITE DOSE CALCULATION MANUAL	The OFFSITE DOSE CALCULATION MANUAL (ODCM) shall contain the current methodology and parameters used in the calculation of offsite doses that result from radioactive gaseous and liquid effluents, in the calculation of gaseous and liquid effluent monitoring Alarm/Trip Setpoints, and in the conduct of the environmental radiological monitoring program. The ODCM shall also contain: (1) the Radioactive Effluent Controls and Radiological Environmental Monitoring Program required by Specification 5.5.1 of Technical Specifications and, (2) descriptions of the information that should be included in the Annual Radiological Environmental Operating and Radioactive Effluent Release Reports required by Technical Specifications 5.6.2 and 5.6.3.
PURGE – PURGING	PURGE and PURGING shall be the controlled process of discharging air or gas from a confinement to maintain temperature, pressure, concentration, or other operating condition, in such a manner that replacement air or gas is required to purify the confinement.
REPORTABLE EVENT	A REPORTABLE EVENT shall be any of those conditions specified in 10 CFR 50.73.
SITE BOUNDARY	The SITE BOUNDARY shall be that line around the Nine Mile Point Nuclear Station beyond which the land is not owned, leased or otherwise controlled by the owners and operators of Nine Mile Point Nuclear Station and James A. Fitzpatrick Nuclear Power Plant. See Figure D 1.0-1.
SOURCE CHECK	A SOURCE CHECK shall be the qualitative assessment of channel response when the channel sensor is exposed to a source of increased radioactivity.
UNRESTRICTED AREA	An UNRESTRICTED AREA shall be any area at or beyond the SITE BOUNDARY, access to which is not controlled by the owners and operators of Nine Mile Point Nuclear Station and James A. Fitzpatrick Nuclear Power Plant for purposes of protection of individuals from exposure to radiation and radioactive materials, or any area within the SITE BOUNDARY used for residential quarters or for industrial, commercial, institutional, and/or recreational purposes.

(continued)

1.0 DEFINITIONS (continued)

TERM	DEFINITION
VENTILATION EXHAUST TREATMENT SYSTEM	A VENTILATION EXHAUST TREATMENT SYSTEM shall be any system designed and installed to reduce gaseous radioiodine or radioactive material in particulate form in effluents by passing ventilation or vent exhaust gases through charcoal adsorbers and/or HEPA filters for the purpose of removing iodines or particulates from the gaseous exhaust stream prior to the release to the environment (such a system is not considered to have any effect on noble gas effluents). Engineered safety features (ESF) atmospheric cleanup systems are not considered to be VENTILATION EXHAUST TREATMENT SYSTEM components.
VENTING	VENTING shall be the controlled process of discharging air or gas from a confinement to maintain temperature, pressure, concentration, or other operating condition, in such a manner that replacement air or gas is not provided or required during VENTING. Vent, used in system names, does not imply a VENTING process.

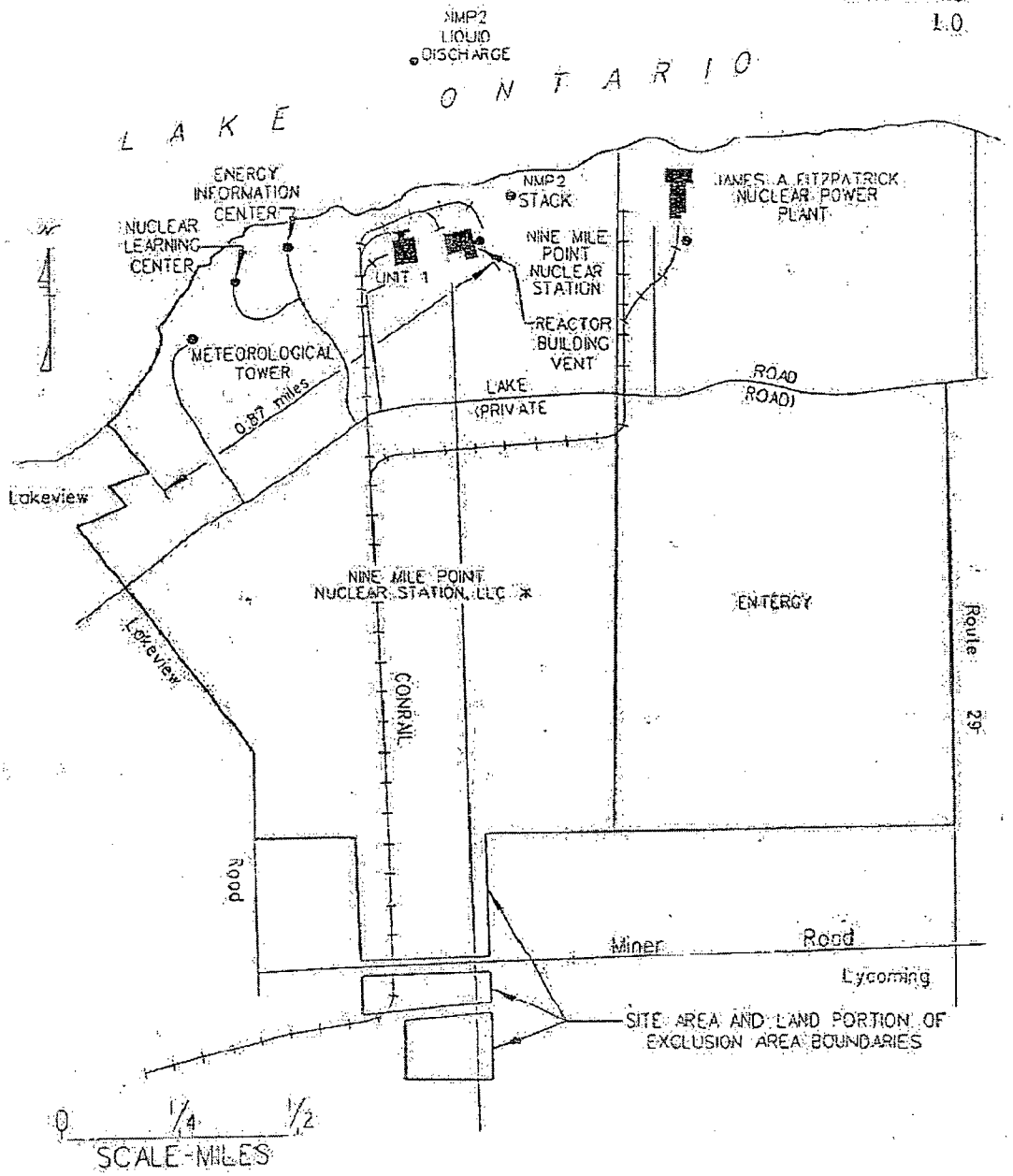

* Niagara Mohawk Power Corporation retains ownership in certain transmission line and switchyard facilities within the exclusion area boundary. Access and usage are controlled by Nine Mile Point Nuclear Station, LLC by agreement.

Figure D 1.0-1 (Page 1 of 1)
Site Area and Land Portion of Exclusion Area Boundaries

PART I - RADIOLOGICAL EFFLUENT CONTROLS

SECTION 3.0 APPLICABILITY

3.0 APPLICABILITY

The Offsite Dose Calculation Manual (ODCM) Specifications are contained in Section 3.0 of Part I. They contain operational requirements, Surveillance Requirements, and reporting requirements. Additionally, the Required Actions and associated Completion Times for degraded Conditions are specified. The format is consistent with the Technical Specifications (Appendix A to the NMP2 Operating License).

The rules of usage for the ODCM Specification are the same as those for the Technical Specifications. These rules are found in Technical Specifications Sections 1.2, "Logical Connectors," 1.3, "Completion Times," and 1.4, "Frequency."

The ODCM Specifications are subject to Technical Specifications Section 3.0, "Limiting Condition for Operation (LCO) Applicability and Surveillance Requirement (SR) Applicability," with the following exceptions:

1. LCO 3.06, regarding support/supported system ACTIONS is not applicable to ODCM Specifications.

2. LCO 3.0.7, regarding allowances to change specified Technical Specifications is not applicable to ODCM Specifications.

3. Section 3.0 requirements are not required when so stated in notes within individual specifications.

D 3.1 RADIOACTIVE LIQUID EFFLUENTS

D 3.1.1 Liquid Effluents Concentration

DLCO 3.1.1 The concentration of radioactive material released in liquid effluents to UNRESTRICTED AREAS (Figure D 1.0-1) shall be limited to:

a. Ten times the concentration specified in 10 CFR Part 20, Appendix B, Table 2, Column 2 for radionuclides other than dissolved or entrained noble gases; and

b. 2×10^{-4} µCi/ml total activity concentration for dissolved or entrained noble gases.

APPLICABILITY: At all times.

ACTIONS

CONDITION	REQUIRED ACTION	COMPLETION TIME
A. Concentration of radioactive material released in liquid effluents to UNRESTRICTED AREAS exceeds limits.	A.1 Initiate action to restore concentration to within limits.	Immediately

SURVEILLANCE REQUIREMENTS

SURVEILLANCE		FREQUENCY
DSR 3.1.1.1	Perform radioactive liquid waste sampling and activity analysis.	In accordance with Table D 3.1.1-1
DSR 3.1.1.2	Verify the results of the DSR 3.1.1.1 analyses to assure that the concentrations at the point of release are maintained within the limits of DLCO 3.1.1.	In accordance with Table D 3.1.1-1

Table D 3.1.1-1 (Page 1 of 2)
Radioactive Liquid Waste Sampling and Analysis

LIQUID RELEASE TYPE	SAMPLE TYPE	SAMPLE FREQUENCY	ANALYSIS FREQUENCY	SAMPLE ANALYSIS	SAMPLE LOWER LIMIT OF DETECTION (LLD) (a)
1. Batch Waste Release Tanks (b) a. 2LWS-TK4A b. 2LWS-TK4B c. 2LWS-TK5A d. 2LWS-TK5B	Grab Sample	Each Batch (g)	Each Batch (g)	Principal Gamma Emitters (c)	5×10^{-7} µCi/ml
				I-131	1×10^{-6} µCi/ml
	Grab Sample	One batch/31 days (g)	31 days	Dissolved and Entrained Gases (gamma emitters)	1×10^{-5} µCi/ml
	Proportional Composite of grab samples (d)	Each batch (g)	31 days	H-3	1×10^{-5} µCi/ml
				Gross Alpha	1×10^{-7} µCi/ml
	Proportional Composite of grab samples (d)	Each batch (g)	92 days	Sr-89	5×10^{-8} µCi/ml
				Sr-90	5×10^{-8} µCi/ml
				Fe-55	1×10^{-6} µCi/ml
2. Continuous Releases a. Service Water Effluent A b. Service Water Effluent B c. Cooling Tower Blowdown	Grab Sample	31 days (e)	31 days (e)	Principal Gamma Emitters (c)	5×10^{-7} µCi/ml
	Grab Sample	31 days (e)	31 days (e)	I-131	1×10^{-6} µCi/ml
	Grab Sample	31 days (e)	31 days (e)	Dissolved and Entrained Gases (gamma emitters)	1×10^{-5} µCi/ml
	Grab Sample	31 days (e)	31 days (e)	H-3	1×10^{-5} µCi/ml
	Grab Sample	31 days (e)	31 days (e)	Gross Alpha	1×10^{-7} µCi/ml
	Grab Sample	92 days (e)	92 days (e)	Sr-89	5×10^{-8} µCi/ml
	Grab Sample	92 days (e)	92 days (e)	Sr-90	5×10^{-8} µCi/ml
	Grab Sample	92 days (e)	92 days (e)	Fe-55	1×10^{-6} µCi/ml
3. Continuous Release Auxiliary Boiler Pump Seal and Sample Cooling Discharge (Service Water)	Grab Sample	31 days (f)	31 days (f)	Principal Gamma Emitters (c)	5×10^{-7} µCi/ml
	Grab Sample	92 days (f)	92 days (f)	H-3	1×10^{-5} µCi/ml

Table D 3.1.1-1 (Page 2 of 2)
Radioactive Liquid Waste Sampling and Analysis

(a) The LLD is defined as the smallest concentration of radioactive material in a sample that will yield a net cont, above system background, that will be detected with 95% probability with only 5% probability of falsely concluding that a blank observation represents a "real" signal.

For a particular measurement system, which may include radiochemical separation:

$$LLD = \frac{(4.66)(S_b)}{(E)(V)(2.22x10^6)(Y)e^{-\lambda\Delta t}}$$

where:

LLD	=	The before-the-fact lower limit of detection (µCi per unit mass or volume),
S_b	=	The standard deviation of the background counting rate or of the counting rate of a blank sample as appropriate (counts per minute),
E	=	The counting efficiency (counts per disintegration),
V	=	The sample size (units of mass or volume),
2.22×10^6	=	The number of disintegrations per minute per µCi,
Y	=	The fractional radiochemical yield, when applicable,
λ	=	The radioactive decay constant for the particular radionuclide (sec^{-1}), and
Δt	=	The elapsed time between the midpoint of sample collection and the time of counting (seconds).

Typical values of E, V, Y, and Δt should be used in the calculation.

It should be recognized that the LLD is defined as a before-the-fact limit representing the capability of a measurement system and not as an after-the-fact limit for a particular measurement.

(b) A batch release is the discharge of liquid wastes of a discrete volume. Prior to sampling for analyses, each batch shall be isolated, and then thoroughly mixed by the method described in Part II, Section 1.4 to assure representative sampling.

(c) The principal gamma emitters for which the LLD applies include the following radionuclides: Mn54, Fe-59, Co-58, Co-60, Zn-65, Mo-99, Cs-134, Cs-137, and Ce-141. Ce-144 shall also be measured, but with an LLD of 5×10^{-6} µCi/ml. This list does not mean that only these nuclides are to be considered. Other gamma peaks that are identifiable, together with those of the above nuclides, shall also be analyzed and reported in the Radioactive Effluent Release Report pursuant to Technical Specification 5.6.3 in the format outlined in RG 1.21, Appendix B, Revision 1, June 1974.

(d) A composite sample is one in which the quantity of liquid sampled is proportional to the quantity of liquid waste discharged and in which the method of sampling employed results in a specimen that is representative of the liquids released.

(e) If the alarm setpoint of the effluent monitor is exceeded, the frequency of sampling shall be increased to daily until the condition no longer exists. Frequency of analysis shall be increased to daily for principal gamma emitters and an incident composite for H3, gross alpha, Sr-89, Sr-90, and Fe-55.

(f) If the alarm setpoint of Service Water Effluent Monitor A and/or B is exceeded, the frequency of sampling shall be increased to daily until the condition no longer exists. Frequency of analysis shall be increased to daily for principal gamma emitters and an incident composite for H-3, gross alpha, Sr-89, Sr-90, and Fe-55.

(g) Complete prior to each release.

D 3.1 RADIOACTIVE LIQUID EFFLUENTS

D 3.1.2 Liquid Effluents Dose

DLCO 3.1.2 The dose or dose commitment to a MEMBER OF THE PUBLIC from radioactive materials released in liquid effluents from each unit to UNRESTRICTED AREAS (Figure D 1.0-1) shall be limited to:

a. ≤ 1.5 mrem to the whole body and ≤ 5 mrem to any organ during any calendar quarter; and

b. ≤ 3 mrem to the whole body and ≤ 10 mrem to any organ during any calendar year.

APPLICABILITY: At all times.

ACTIONS

NOTES

1. LCO 3.0.3 is not applicable.
2. LCO 3.0.4 is not applicable.

CONDITION	REQUIRED ACTION	COMPLETION TIME
A. Calculated dose to a MEMBER OF THE PUBLIC from the release of radioactive materials in liquid effluents to UNRESTRICTED AREAS exceeds limits.	A.1 Prepare and submit to the NRC, pursuant to D 4.1.1, a Special Report that (1) Identifies the cause(s) for exceeding the limit(s) and (2) Defines the corrective actions that have been taken to reduce the releases and the proposed corrective actions to be taken to assure that subsequent releases will be in compliance with DLCO 3.1.2.	30 days

(continued)

ACTIONS (continued)

CONDITION	REQUIRED ACTION	COMPLETION TIME
B. Calculated dose to a MEMBER OF THE PUBLIC from the release of radioactive materials in liquid effluents exceeds 2 times the limits.	B.1 Calculate the annual dose to a MEMBER OF THE PUBLIC which includes contributions from direct radiation from the units (including outside storage tanks, etc.).	Immediately
	AND	
	B.2 Verify that the limits of DLCO 3.4 have not been exceeded.	Immediately
C. Required Action B.2 and Associated Completion time not met.	C.1 Prepare and submit to the NRC, pursuant to D 4.1.1, a Special Report, as defined in 10 CFR 20.2203 (a)(4), of Required Action A.1 shall also include the following: (1) The corrective action(s) to be taken to prevent recurrence of exceeding the limits of DLCO 3.4 and the schedule for achieving conformance, (2) An analysis that estimates the dose to a MEMBER OF THE PUBLIC from uranium fuel cycle sources, including all effluent pathways and direct radiation, for the calendar year that includes the release(s), and (3) Describes the levels of radiation and concentrations of radioactive material involved and the cause of the exposure levels or concentrations.	30 days

SURVEILLANCE REQUIREMENTS

SURVEILLANCE		FREQUENCY
DSR 3.1.2.1	Determine cumulative dose contributions from liquid effluents for the current calendar quarter and the current calendar year.	31 days

D 3.1 RADIOACTIVE LIQUID EFFLUENTS

D 3.1.3 Liquid Radwaste Treatment System

DLCO 3.1.3 The liquid radwaste treatment system shall be FUNCTIONAL.

APPLICABILITY: At all times.

ACTIONS

----------NOTES----------

1. LCO 3.0.3 is not applicable.
2. LCO 3.0.4 is not applicable.

CONDITION	REQUIRED ACTION	COMPLETION TIME
A. Radioactive liquid waste being discharged without treatment. AND Projected doses due to the liquid effluent, from the unit, to UNRESTRICTED AREAS would exceed 0.06 mrem to the whole body or 0.2 mrem to any organ in a 31 day period. AND Any portion of the liquid radwaste treatment system not in operation.	A.1 Prepare and submit to the NRC, pursuant to D 4.1.1, a Special Report that includes: (1) An explanation of why liquid radwaste was being discharged without treatment, identification of any nonfunctional equipment or subsystems, and the reason for the nonfunctionality, (2) Action(s) taken to restore the nonfunctional equipment to FUNCTIONAL status, and (3) Summary description of action(s) taken to prevent a recurrence.	30 days

SURVEILLANCE REQUIREMENTS

	SURVEILLANCE	FREQUENCY
DSR 3.1.3.1	----------NOTE---------- Only required to be met when liquid radwaste treatment systems are not being fully utilized. ----------	
	Project the doses due to liquid effluents from each unit to UNRESTRICTED AREAS.	31 days

D 3.2 RADIOACTIVE GASEOUS EFFLUENTS

D 3.2.1 Gaseous Effluents Dose Rate

DLCO 3.2.1 The dose rate from radioactive materials released in gaseous effluents from the site to areas at or beyond the SITE BOUNDARY (Figure D 1.0-1) shall be limited to:

a. For noble gases, ≤ 500 mrem/yr to the whole body and ≤ 3000 mrem/yr to the skin and

b. For I-131, I-133, H-3 and all radionuclides in particulate form with half-lives > 8 days, ≤ 1500 mrem/yr to any organ.

APPLICABILITY: At all times.

ACTIONS

CONDITION	REQUIRED ACTION	COMPLETION TIME
A. The dose rate(s) at or beyond the SITE BOUNDARY due to radioactive gaseous effluents exceeds limits.	A.1 Restore the release rate to within the limit.	Immediately

SURVEILLANCE REQUIREMENTS

SURVEILLANCE		FREQUENCY
DSR 3.2.1.1	The dose rate from noble gases in gaseous effluents shall be determined to be within the limits of DLCO 3.2.1.a.	In accordance with Table D 3.2.1-1
DSR 3.2.1.2	The dose rate from I-131, I-133, H-3 and all radionuclides in particulate form with half-lives > 8 days in gaseous effluents shall be determined to be within the limits of DLCO 3.2.1.b.	In accordance with Table D 3.2.1-1

Table D 3.2.1-1 (Page 1 of 2)
Radioactive Gaseous Waste Sampling and Analysis

GASEOUS RELEASE TYPE	SAMPLE TYPE	SAMPLE FREQUENCY	ANALYSIS FREQUENCY	SAMPLE ANALYSIS	SAMPLE LOWER LIMIT OF DETECTION (LLD) (a)
1. Containment (b)	Grab Sample	Each Purge	(h)	Principal Gamma Emitters (c)	1×10^{-4} µCi/ml
			Each Purge	H-3 (oxide)	1×10^{-6} µCi/ml
			Each Purge	Principal Gamma Emitters (c)	1×10^{-4} µCi/ml
2. Main Stack, Radwaste/Reactor Building Vent	Grab Sample	31 days (d)	31 days (d)	Principal Gamma Emitters (c)	1×10^{-4} µCi/ml
	Grab Sample	31 days (e)	31 days (e)	H-3 (oxide)	1×10^{-6} µCi/ml
	Charcoal Sample	Continuous (f)	7 days (g)	I-131	1×10^{-12} µCi/ml
	Particulate Sample	Continuous (f)	7 days (g)	Principal Gamma Emitters (c)	1×10^{-11} µCi/ml
				Gross Alpha	1×10^{-11} µCi/ml
	Composite Particulate Sample	Continuous (f)	92 days	Sr-89	1×10^{-11} µCi/ml
				Sr-90	1×10^{-11} µCi/ml

See the notes on the next page.

Table D 3.2.1-1 (Page 2 of 2)
Radioactive Gaseous Waste Sampling and Analysis

(a) The LLD is defined as the smallest concentration of radioactive material in a sample that will yield a net count, above system background, that will be detected with 95% probability with only 5% probability of falsely concluding that a blank observation represents a "real" signal.

For a particular measurement system, which may include radiochemical separation:

$$LLD = \frac{(4.66)(S_b)}{(E)(V)(2.22x10^6)(Y)e^{-\lambda\Delta t}}$$

where:

LLD	=	The before-the-fact lower limit of detection (μCi per unit mass or volume),
S_b	=	The standard deviation of the background counting rate or of the counting rate of a blank sample as appropriate (counts per minute),
E	=	The counting efficiency (counts per disintegration),
V	=	The sample size (units of mass or volume),
2.22×10^6	=	The number of disintegrations per minute per μCi,
Y	=	The fractional radiochemical yield, when applicable,
λ	=	The radioactive decay constant for the particular radionuclide (sec^{-1}), and
Δt	=	The elapsed time between the midpoint of sample collection and the time of counting (seconds).

Typical values of E, V, Y, and Δt should be used in the calculation.

It should be recognized that the LLD is defined as a before-the-fact limit representing the capability of a measurement system and not as an after-the-fact limit for a particular measurement.

(b) Sample and analysis before PURGE is used to determine permissible PURGE rates. Sample and analysis during actual PURGE is used for offsite dose calculations.

(c) The principal gamma emitters for which the LLD applies include the following radionuclides: Kr87, Kr-88, Xe-133, Xe-133m, Xe-135, and Xe-138 in noble gas releases and Mn-54, Fe-59, Co-58, Co-60, Zn-65, Mo-99, I-131, Cs-134, Cs-137, Ce-141 and Ce-144 in iodine and particulate releases. This list does not mean that only these nuclides are to be considered. Other gamma peaks that are identifiable, together with those of the above nuclides, shall also be analyzed and reported in the Radioactive Effluent Release Report pursuant to Technical Specification 5.6.3 in the format outlined in RG 1.21, Appendix B, Revision 1, June 1974.

(d) If the main stack or reactor/radwaste building isotopic monitor is not FUNCTIONAL, sampling and analysis shall also be performed following shutdown, startup, or when there is an alarm on the offgas pretreatment monitor.

(e) H-3 grab samples shall be taken once every 7 days from the reactor/radwaste ventilation system when fuel is offloaded until stable H-3 release levels can be demonstrated.

(f) The ratio of the sample flow rate to the sampled stream flow rate shall be known for the time period covered by each dose or dose rate calculation made in accordance with DLCO 3.2.1.b and DLCO 3.2.3.

(g) When the release rate of the main stack or reactor/radwaste building vent exceeds its alarm setpoint, the iodine and particulate device shall be removed and analyzed to determine the changes in iodine and particulate release rates. The analysis shall be done once per 24 hours until the release no longer exceeds the alarm setpoint. When samples collected for 24 hours are analyzed, the corresponding LLDs may be increased by a factor of 10.

(h) Complete prior to each release.

D 3.2 RADIOACTIVE GASEOUS EFFLUENTS

D 3.2.2 Gaseous Effluents Noble Gas Dose

DLCO 3.2.2 The air dose from noble gases released in gaseous effluents from each unit to areas at or beyond the SITE BOUNDARY (Figure D 1.0-1) shall be limited to:

a. During any calendar quarter: ≤ 5 mrad for gamma radiation and ≤ 10 mrad for beta radiation and

b. During any calendar year: ≤ 10 mrad for gamma radiation and ≤ 20 mrad for beta radiation.

APPLICABILITY: At all times.

ACTIONS

NOTES

1. LCO 3.0.3 is not applicable.
2. LCO 3.0.4 is not applicable.

CONDITION	REQUIRED ACTION	COMPLETION TIME
A. The air dose at or beyond the SITE BOUNDARY due to noble gases released in gaseous effluents exceeds limits.	A.1 Prepare and submit to the NRC, pursuant to D 4.1.1, a Special Report that (1) Identifies the cause(s) for exceeding the limit(s) and (2) Defines the corrective actions that have been taken to reduce the releases and the proposed corrective actions to be taken to assure that subsequent releases will be in compliance with DLCO 3.2.2.	30 days

(continued)

ACTIONS (continued)

CONDITION	REQUIRED ACTION	COMPLETION TIME
B. Calculated dose to a MEMBER OF THE PUBLIC from the release of radioactive materials in gaseous effluents due to noble gases exceeds 2 times the limits.	B.1 Calculate the annual dose to a MEMBER OF THE PUBLIC which includes contributions from direct radiation from the units (including outside storage tanks, etc.).	Immediately
	AND	
	B.2 Verify that the limits of DLCO 3.4 have not been exceeded.	Immediately
C. Required Action B.2 and Associated Completion time not met.	C.1 Special Report, as defined in 10 CFR 20.2203 (a)(4), of Required Action A.1 shall also include the following: (1) The corrective action(s) to be taken to prevent recurrence of exceeding the limits of DLCO 3.4 and the schedule for achieving conformance, (2) An analysis that estimates the dose to a MEMBER OF THE PUBLIC from uranium fuel cycle sources, including all effluent pathways and direct radiation, for the calendar year that includes the release(s), and (3) Describes the levels of radiation and concentrations of radioactive material involved and the cause of the exposure levels or concentrations.	30 days

SURVEILLANCE REQUIREMENTS

SURVEILLANCE		FREQUENCY
DSR 3.2.2.1	Determine cumulative dose contributions for the current calendar quarter and current calendar year.	31 days

D 3.2 RADIOACTIVE GASEOUS EFFLUENTS

D 3.2.3 Gaseous Effluents Dose – I-131, I-133, H-3 and Radioactive Material in Particulate Form

DLCO 3.2.3 The dose to a MEMBER OF THE PUBLIC from I-131, I-133, H-3, and all radioactive material in particulate form with half-lives > 8 days in gaseous effluents released, from each unit, to areas at or beyond the SITE BOUNDARY (Figure D 1.0-1) shall be limited to:

a. During any calendar quarter: ≤ 7.5 mrem to any organ and

b. During any calendar year: ≤ 15 mrem to any organ.

APPLICABILITY: At all times.

ACTIONS

NOTES

1. LCO 3.0.3 is not applicable.
2. LCO 3.0.4 is not applicable.

CONDITION	REQUIRED ACTION	COMPLETION TIME
A. The dose from I-131, I-133, H-3 and radioactive material in particulate form with half-lives > 8 days released in gaseous effluents at or beyond the SITE BOUNDARY exceeds limits.	A.1 Prepare and submit to the NRC, pursuant to D 4.1.1, a Special Report that (1) Identifies the cause(s) for exceeding the limit(s) and (2) Defines the corrective actions that have been taken to reduce the releases and the proposed corrective actions to be taken to assure that subsequent releases will be in compliance with DLCO 3.2.3.	30 days

(continued)

ACTIONS (continued)

CONDITION	REQUIRED ACTION	COMPLETION TIME
B. Calculated dose to a MEMBER OF THE PUBLIC from the release of radioactive materials in gaseous effluents exceeds 2 times the limits.	B.1 Calculate the annual dose to a MEMBER OF THE PUBLIC which includes contributions from direct radiation from the units (including outside storage tanks, etc.).	Immediately
	AND	
	B.2 Verify that the limits of DLCO 3.4 have not been exceeded.	Immediately
C. Required Action B.2 and Associated Completion time not met.	C.1 Special Report, as defined in 10 CFR 20.2203 (a)(4), of Required Action A.1 shall also include the following: (1)The corrective action(s) to be taken to prevent recurrence of exceeding the limits of DLCO 3.4 and the schedule for achieving conformance, (2)An analysis that estimates the dose to a MEMBER OF THE PUBLIC from uranium fuel cycle sources, including all effluent pathways and direct radiation, for the calendar year that includes the release(s), and (3)Describes the levels of radiation and concentrations of radioactive material involved and the cause of the exposure levels or concentrations.	30 days

SURVEILLANCE REQUIREMENTS

SURVEILLANCE		FREQUENCY
DSR 3.2.3.1	Determine cumulative dose contributions for the current calendar quarter and current calendar year for I-131, I-133, H-3 and radioactive material in particulate form with half-lives > 8 days.	31 days

D 3.2 RADIOACTIVE GASEOUS EFFLUENTS

D 3.2.4 Gaseous Radwaste Treatment System

DLCO 3.2.4 The GASEOUS RADWASTE TREATMENT SYSTEM shall be in operation.

APPLICABILITY: Whenever the main condenser air ejector system is in operation.

ACTIONS

NOTE
LCO 3.0.3 is not applicable.

CONDITION	REQUIRED ACTION	COMPLETION TIME
A. The gaseous radwaste from the main condenser air ejector system is being discharged without treatment.	A.1 Restore treatment of gaseous radwaste effluent.	7 days
B. Required Action and associated Completion Time not met.	B.1 Prepare and submit to the NRC, pursuant to D 4.1.1, a Special Report that includes the following: (1) Identification of any nonfunctional equipment or subsystems and the reason for the nonfunctionality, (2) Action(s) taken to restore the nonfunctional equipment to FUNCTIONAL status, and (3) Summary description of action(s) taken to prevent a recurrence.	30 days

SURVEILLANCE REQUIREMENTS

SURVEILLANCE		FREQUENCY
DSR 3.2.4.1	Check the readings of the relevant instruments to ensure that the GASEOUS RADWASTE TREATMENT SYSTEM is functioning.	12 hours

D 3.2 RADIOACTIVE GASEOUS EFFLUENTS

D 3.2.5 Ventilation Exhaust Treatment System

DLCO 3.2.5 The VENTILATION EXHAUST TREATMENT SYSTEM shall be FUNCTIONAL.

APPLICABILITY: At all times.

ACTIONS

NOTES

1. LCO 3.0.3 is not applicable.
2. LCO 3.0.4 is not applicable.

CONDITION	REQUIRED ACTION	COMPLETION TIME
A. The radioactive gaseous waste is being discharged without treatment. AND Projected doses in 31 days from iodine and particulate releases, from each unit, to areas at or beyond the SITE BOUNDARY (see Figure D 1.0-1) would exceed 0.3 mrem to any organ of a MEMBER OF THE PUBLIC.	A.1 Prepare and submit to the NRC, pursuant to D 4.1.1, a Special Report that includes the following: (1) Identification of any nonfunctional equipment or subsystems and the reason for the nonfunctionality, (2) Action(s) taken to restore the nonfunctional equipment to FUNCTIONAL status, and (3) Summary description of action(s) taken to prevent a recurrence.	30 days

SURVEILLANCE REQUIREMENTS

SURVEILLANCE		FREQUENCY
DSR 3.2.5.1	----------NOTE---------- Only required to be met when the VENTILATION EXHAUST TREATMENT SYSTEM is not being fully utilized. ---------- Project the doses from iodine and particulate releases from each unit to areas at or beyond the SITE BOUNDARY.	31 days

D 3.2 RADIOACTIVE GASEOUS EFFLUENTS

D 3.2.6 Venting or Purging

DLCO 3.2.6 VENTING or PURGING of the drywell and/or suppression chamber shall be through the standby gas treatment system.

APPLICABILITY: MODES 1, 2, and 3.

ACTIONS

----------NOTES----------

1. LCO 3.0.3 is not applicable.

2. LCO 3.0.4 is not applicable.

CONDITION	REQUIRED ACTION	COMPLETION TIME
A. VENTING or PURGING of the drywell and/or suppression chamber not through the standby gas treatment system.	A.1 Suspend all VENTING and PURGING of the drywell and/or suppression chamber.	Immediately

SURVEILLANCE REQUIREMENTS

SURVEILLANCE		FREQUENCY
DSR 3.2.6.1	The drywell and/or suppression chamber shall be determined to be aligned for VENTING or PURGING through the standby gas treatment system.	Within 4 hours before start of VENTING or PURGING AND 12 hours thereafter during VENTING or PURGING

D 3.3 INSTRUMENTATION

D 3.3.1 Radioactive Liquid Effluent Monitoring Instrumentation

DLCO 3.3.1 The radioactive liquid effluent monitoring instrumentation channels shown in Table D 3.3.1-1 shall be FUNCTIONAL with:

a. The minimum FUNCTIONAL channel(s) in service.

b. The alarm/trip setpoints set to ensure that the limits of DLCO 3.1.1 are not exceeded.

APPLICABILITY: According to Table D 3.3.1-1.

ACTIONS

----------NOTES----------

1. LCO 3.0.3 is not applicable.
2. Separate condition entry is allowed for each channel.

CONDITION	REQUIRED ACTION	COMPLETION TIME
A. Liquid effluent monitoring instrumentation channel alarm/trip setpoint less conservative than required.	A.1 Suspend the release of radioactive liquid effluents monitored by the affected channel.	Immediately
	OR	
	A.2 Declare the channel nonfunctional.	Immediately
	OR	
	A.3 Change the setpoint so it is acceptably conservative.	Immediately

(continued)

ACTIONS (continued)

CONDITION	REQUIRED ACTION	COMPLETION TIME
B. One or more required channels nonfunctional.	B.1 Enter the Condition referenced in Table D 3.3.1-1 for the channel.	Immediately
	AND	
	B.2 Restore nonfunctional channel(s) to FUNCTIONAL status.	30 days
C. As required by Required Action B.1 and referenced in Table D 3.3.1-1.	C.1 Analyze at least 2 independent samples in accordance with Table D 3.1.1-1.	Prior to initiating a release
	AND	
	C.2 ----------NOTE---------- Verification Action will be performed by at least 2 separate technically qualified members of the facility staff. ----------	
	Independently verify the release rate calculations and discharge line valving.	Prior to initiating a release
D. As required by Required Action B.1 and referenced in Table D 3.3.1-1.	D.1 Collect and analyze grab samples for radioactivity at a limit of detection of at least 5×10^{-7} µCi/ml.	12 hours AND Once per 12 hours thereafter

(continued)

ACTIONS (continued)

CONDITION	REQUIRED ACTION	COMPLETION TIME
E. As required by Required Action B.1 and referenced in Table D 3.3.1-1.	E.1 ----------NOTE---------- Pump performance curves generated in place may be used to estimate flow. ---------- Estimate the flow rate during actual releases.	4 hours AND Once per 4 hours thereafter
F. As required by Required Action B.1 and referenced in Table D 3.3.1-1.	F.1 Estimate tank liquid level.	Immediately AND During liquid additions to the tank
G. Required Action B.2 and associated Completion Time not met.	G.1 Explain in the next Radioactive Effluent Release Report why the nonfunctionality was not corrected in a timely manner.	In accordance with Radioactive Effluent Release Report
H. Required Action and associated Completion Time for Condition C, D, or E not met.	H.1 Suspend liquid effluent releases monitored by the nonfunctional channel(s).	Immediately
I. Required Action and associated Completion Time for Condition F not met.	I.1 Suspend liquid additions to the tank monitored by the nonfunctional channel(s).	Immediately

SURVEILLANCE REQUIREMENTS

NOTE
Refer to Table D 3.3.1-1 to determine which DSRs apply for each function.

SURVEILLANCE		FREQUENCY
DSR 3.3.1.1	Perform CHANNEL CHECK.	24 hours
DSR 3.3.1.2	Perform CHANNEL CHECK by verifying indication of flow during periods of release.	24 hours on any day on which continuous, periodic, or batch releases are made
DSR 3.3.1.3	Perform SOURCE CHECK.	Prior to release
DSR 3.3.1.4	Perform SOURCE CHECK.	31 days
DSR 3.3.1.5	Perform CHANNEL FUNCTIONAL TEST. The CHANNEL FUNCTIONAL TEST shall also demonstrate that automatic isolation of this pathway and control room alarm annunciation occurs if the instrument indicates measured levels above the alarm/trip setpoint; and control room alarm annunciation occurs for instrument indication levels measured above the alarm setpoint, circuit failure, instrument indicating a downscale failure, or instrument controls not set in operate mode.	31 days
DSR 3.3.1.6	Perform CHANNEL FUNCTIONAL TEST.	92 days

(continued)

SURVEILLANCE REQUIREMENTS (continued)

SURVEILLANCE		FREQUENCY
DSR 3.3.1.7	Perform CHANNEL FUNCTIONAL TEST. The CHANNEL FUNCTIONAL TEST shall also demonstrate control room alarm annunciation occurs for instrument indication levels measured above the alarm setpoint, circuit failure, instrument indicating a downscale failure, or instrument controls not set in operate mode.	184 days
DSR 3.3.1.8	Perform CHANNEL CALIBRATION. The initial CHANNEL CALIBRATION shall be performed using one or more of the reference standards certified by the National Institute of Standards and Technology (NIST), standards that are traceable to NIST standards, or using actual samples of liquid effluents that have been analyzed on a system that has been calibrated with NIST traceable sources. These standards shall permit calibrating the system over its intended range of energy and measurement. For subsequent CHANNEL CALIBRATION, sources that have been related to the initial calibration may be used.	18 months
DSR 3.3.1.9	Perform CHANNEL CALIBRATION.	18 months

Table D 3.3.1-1 (page 1 of 1)
Radioactive Liquid Effluent Monitoring Instrumentation

INSTRUMENT	APPLICABILITY OR OTHER SPECIFIED CONDITIONS	REQUIRED CHANNELS PER INSTRUMENT	CONDITIONS REFERENCED FROM REQUIRED ACTION B.1	SURVEILLANCE REQUIREMENTS
1. Radioactivity Monitors Providing Alarm and Automatic Termination of Release				
Liquid Radwaste Effluent Line	(a)	1	C	DSR 3.3.1.1 DSR 3.3.1.3 DSR 3.3.1.5 DSR 3.3.1.8
2. Radioactivity Monitors Providing Alarm but not Providing Automatic Termination of Release				
a. Service Water Effluent Line A	(a)	1	D	DSR 3.3.1.1 DSR 3.3.1.4 DSR 3.3.1.7 DSR 3.3.1.8
b. Service Water Effluent Line B	(a)	1	D	DSR 3.3.1.1 DSR 3.3.1.4 DSR 3.3.1.7 DSR 3.3.1.8
c. Cooling Tower Blowdown Line	(a)	1	D	DSR 3.3.1.1 DSR 3.3.1.4 DSR 3.3.1.7 DSR 3.3.1.8
3. Flow Rate Measurement Devices				
a. Liquid Radwaste Effluent Line	(a)	1	E	DSR 3.3.1.2 DSR 3.3.1.6 DSR 3.3.1.9
b. Service Water Effluent Line A	(a)	1	E	DSR 3.3.1.2 DSR 3.3.1.6 DSR 3.3.1.9
c. Service Water Effluent Line B	(a)	1	E	DSR 3.3.1.2 DSR 3.3.1.6 DSR 3.3.1.9
d. Cooling Tower Blowdown Line	(a)	1	E	DSR 3.3.1.2 DSR 3.3.1.6 DSR 3.3.1.9
4. Tank Level Indicating Devices (c)	(b)	1	F	DSR 3.3.1.1 DSR 3.3.1.6 DSR 3.3.1.9

(a) During releases via this pathway.
(b) During liquid addition to the associated tank.
(c) Tanks included in this DLCO are those outdoor tanks that are not surrounded by liners, dikes, or walls capable of holding the tank contents and do not have tank overflows and surrounding area drains connected to the liquid radwaste treatment system, such as temporary tanks.

D 3.3 INSTRUMENTATION

D 3.3.2 Radioactive Gaseous Effluent Monitoring Instrumentation

DLCO 3.3.2 The radioactive gaseous effluent monitoring instrumentation channels shown in Table D 3.3.2-1 shall be FUNCTIONAL with:

a. The minimum FUNCTIONAL channel(s) in service.

b. The alarm/trip setpoints of Offgas Noble Gas Activity Monitor set to ensure that the limit of Technical Specification LCO 3.7.4 is not exceeded.

c. The alarm/trip setpoints of Radwaste/Reactor Building Vent Effluent Noble Gas Activity Monitor and Main Stack Effluent Noble Gas Activity Monitor set to ensure that the limits of DLCO 3.2.1 are not exceeded.

APPLICABILITY: According to Table D 3.3.2-1.

ACTIONS

NOTES

1. LCO 3.0.3 is not applicable.
2. Separate condition entry is allowed for each channel.

CONDITION	REQUIRED ACTION	COMPLETION TIME
A. Gaseous effluent monitoring instrumentation channel alarm/trip setpoint less conservative than required.	A.1 Suspend the release of radioactive gaseous effluents monitored by the affected channel.	Immediately
	OR	
	A.2 Declare the channel nonfunctional.	Immediately
	OR	
	A.3 Change the setpoint so it is acceptably conservative.	Immediately

(continued)

ACTIONS (continued)

CONDITION	REQUIRED ACTION	COMPLETION TIME
B. One or more channels nonfunctional.	B.1 Enter the Condition referenced in Table D 3.3.2-1 for the channel.	Immediately
	AND	
	B.2 Restore nonfunctional channel(s) to FUNCTIONAL status.	30 days
C. As required by Required Action B.1 and referenced in Table D 3.3.2-1.	C.1 Place the nonfunctional channel in the tripped condition.	12 hours
	OR	
	C.2.1 Take grab samples.	12 hours
		AND
		Once per 12 hours thereafter
	AND	
	C.2.2 Analyze samples for gross activity.	24 hours from time of sampling completion

(continued)

ACTIONS (continued)

CONDITION	REQUIRED ACTION	COMPLETION TIME
D. As required by Required Action B.1 and referenced in Table D 3.3.2-1.	D.1 Estimate the flow rate for the nonfunctional channel(s).	4 hours AND Once per 4 hours thereafter
E. As required by Required Action B.1 and referenced in Table D 3.3.2-1.	E.1 Continuously collect samples using auxiliary sampling equipment as required in Table D 3.2.1-1.	8 hours
F. As required by Required Action B.1 and referenced in Table D 3.3.2-1.	F.1.1 Take grab samples.	12 hours AND Once per 12 hours thereafter
	AND	
	F.1.2 Analyze samples for gross activity with a radioactivity limit of detection of at least 1×10^{-4} µCi/ml.	24 hours from time of sampling completion
	AND	
	F.2.1 Restore the nonfunctional channel(s) to FUNCTIONAL status.	72 hours
	OR	
	F.2.2 Through a CR, determine: (1) The cause(s) of the nonfunctional. (2) The actions to be taken and the schedule for restoring the system to FUNCTIONAL status.	14 days

(continued)

ACTIONS (continued)

CONDITION	REQUIRED ACTION	COMPLETION TIME
G. Required Action B.2 and associated Completion Time not met.	G.1 Explain in the next Radioactive Effluent Release Report why the nonfunctionality was not corrected in a timely manner.	In accordance with Radioactive Effluent Release Report frequency
H Required Action and associated Completion Time for Condition C, D, E or F.1 not met.	H.1 Suspend gaseous effluent releases monitored by the nonfunctional channel(s).	Immediately

SURVEILLANCE REQUIREMENTS

SURVEILLANCE		FREQUENCY
DSR 3.3.2.1	Perform CHANNEL CHECK.	24 hours
DSR 3.3.2.2	Perform CHANNEL CHECK.	7 days
DSR 3.3.2.3	Perform SOURCE CHECK.	31 days
DSR 3.3.2.4	Perform CHANNEL FUNCTIONAL TEST. The CHANNEL FUNCTIONAL TEST shall also demonstrate the automatic isolation capability of this pathway and that control room alarm annunciation occurs if the instrument indicates measured levels above the alarm/trip setpoint (each channel will be tested independently so as to not initiate isolation during operation); and control room alarm annunciation occurs for instrument indication levels measured above the alarm setpoint, circuit failure, instrument indicating a downscale failure, and instrument controls not set in operate mode.	31 days
DSR 3.3.2.5	Perform CHANNEL FUNCTIONAL TEST.	92 days
DSR 3.3.2.6	Perform CHANNEL FUNCTIONAL TEST. The CHANNEL FUNCTIONAL TEST shall also demonstrate control room alarm annunciation occurs for instrument indication levels measured above the alarm setpoint, circuit failure, instrument indicating a downscale failure, and instrument controls not set in operate mode.	92 days

(continued)

SURVEILLANCE REQUIREMENTS (continued)

SURVEILLANCE		FREQUENCY
DSR 3.3.2.7	Perform CHANNEL CALIBRATION. The initial CHANNEL CALIBRATION shall be performed using one or more of the reference standards certified by the National Institute of Standards and Technology (NIST) or using standards that have been obtained from suppliers that participate in measurement assurance activities with NIST, or using actual samples of gaseous effluents that have been analyzed on a system that has been calibrated with NIST traceable sources. These standards shall permit calibrating the system over its intended range of energy and measurement. For subsequent CHANNEL CALIBRATION, sources that have been related to the initial calibration may be used. The CHANNEL CALIBRATION shall also demonstrate that automatic isolation of this pathway occurs when the instrument channels indicate measured levels above the Trip Setpoint.	24 months
DSR 3.3.2.8	Perform CHANNEL CALIBRATION.	18 months
DSR 3.3.2.9	Perform CHANNEL CALIBRATION. The initial CHANNEL CALIBRATION shall be performed using one or more of the reference standards certified by the National Institute of Standards and Technology (NIST) or using standards that have been obtained from suppliers that participate in measurement assurance activities with NIST, or using actual samples of gaseous effluents that have been analyzed on a system that has been calibrated with NIST traceable sources. These standards shall permit calibrating the system over its intended range of energy and measurement. For subsequent CHANNEL CALIBRATION, sources that have been related to the initial calibration may be used.	18 months
DSR 3.3.2.10	Perform CHANNEL CALIBRATION.	24 months

Table D 3.3.2-1 (page 1 of 2)
Radioactive Gaseous Effluent Monitoring Instrumentation

INSTRUMENT	APPLICABILITY OR OTHER SPECIFIED CONDITIONS	REQUIRED CHANNELS PER INSTRUMENT	CONDITIONS REFERENCED FROM REQUIRED ACTION B.1	SURVEILLANCE REQUIREMENTS
1. Offgas System				
a. Noble Gas Activity Monitor – Providing Alarm and Automatic Termination of Release	(a)	2	C	DSR 3.3.2.1 DSR 3.3.2.4 DSR 3.3.2.7
b. System Flow-Rate Measuring Device	(a)	1	D	DSR 3.3.2.1 DSR 3.3.2.5 DSR 3.3.2.10
c. Sample Flow-Rate Measuring Device	(a)	2	D	DSR 3.3.2.1 DSR 3.3.2.5 DSR 3.3.2.10
2. Radwaste/Reactor Building Vent Effluent System				
a. Noble Gas Activity Monitor (c)	(b)	1	F	DSR 3.3.2.1 DSR 3.3.2.3 DSR 3.3.2.6 DSR 3.3.2.9
b. Iodine Sampler	(b)	1	E	DSR 3.3.2.2
c. Particulate Sampler	(b)	1	E	DSR 3.3.2.2
d. Flow-Rate Monitor	(b)	1	D	DSR 3.3.2.1 DSR 3.3.2.5 DSR 3.3.2.8
e. Sample Flow-Rate Monitor	(b)	1	D	DSR 3.3.2.1 DSR 3.3.2.5 DSR 3.3.2.8

(continued)

(a) During offgas system operation.

(b) At all times.

(c) Includes high range noble gas monitoring capability.

Table D 3.3.2-1 (page 2 of 2)
Radioactive Gaseous Effluent Monitoring Instrumentation

INSTRUMENT	APPLICABILITY OR OTHER SPECIFIED CONDITIONS	REQUIRED CHANNELS PER INSTRUMENT	CONDITIONS REFERENCED FROM REQUIRED ACTION B.1	SURVEILLANCE REQUIREMENTS
3. Main Stack Effluent				
a. Noble Gas Activity Monitor (c)	(b)	1	F	DSR 3.3.2.1 DSR 3.3.2.3 DSR 3.3.2.6 DSR 3.3.2.9
b. Iodine Sampler	(b)	1	E	DSR 3.3.2.2
c. Particulate Sampler	(b)	1	E	DSR 3.3.2.2
d. Flow-Rate Monitor	(b)	1	D	DSR 3.3.2.1 DSR 3.3.2.5 DSR 3.3.2.8
e. Sample Flow-Rate Monitor	(b)	1	D	DSR 3.3.2.1 DSR 3.3.2.5 DSR 3.3.2.8

(b) At all times.

(c) Includes high range noble gas monitoring capability.

D 3.4 RADIOACTIVE EFFLUENTS TOTAL DOSE

D 3.4 Radioactive Effluents Total Dose

DLCO 3.4 The annual (calendar year) dose or dose commitment to any MEMBER OF THE PUBLIC due to releases of radioactivity and to radiation from uranium fuel cycle sources shall be limited to ≤ 25 mrem to the whole body or any organ, except the thyroid, which shall be limited to ≤ 75 mrem.

APPLICABILITY: At all times.

ACTIONS

----------NOTES----------

1. LCO 3.0.3 is not applicable.
2. LCO 3.0.4 is not applicable.

CONDITION	REQUIRED ACTION	COMPLETION TIME
A. Estimated dose or dose commitment due to direct radiation and the release of radioactive materials in liquid or gaseous effluents exceeds the limits.	A.1 Verify the condition resulting in doses exceeding these limits has been corrected.	Immediately
B. Required Action and associated Completion Time not met.	B.1 ----------NOTE---------- This is the Special Report required by D 3.1.2, D 3.2.2, or D 3.2.3 supplemented with the following. ---------- Submit a Special Report, pursuant to D 4.1.1, including a request for a variance in accordance with the provisions of 40 CFR 190. This submission is considered a timely request, and a variance is granted until staff action on the request is complete.	30 days

D 3.5 RADIOLOGICAL ENVIRONMENTAL MONITORING

D 3.5.1 Monitoring Program

DLCO 3.5.1 The Radiological Environmental Monitoring Program shall be conducted as specified in Table D 3.5.1-1.

APPLICABILITY: At all times.

ACTIONS

----------NOTES----------

1. LCO 3.0.3 is not applicable.
2. LCO 3.0.4 is not applicable.

CONDITION	REQUIRED ACTION	COMPLETION TIME
A. Radiological Environmental Monitoring Program not conducted as specified in Table D 3.5.1-1.	A.1 Prepare and submit to the NRC in the Annual Radiological Environmental Operating Report, a description of the reasons for not conducting the program as required and the plans for preventing a recurrence.	In accordance with the Annual Radiological Environmental Operating Report frequency
B. Level of radioactivity in an environmental sampling medium at a specified location exceeds the reporting levels of Table D 3.5.1-2 when averaged over any calendar quarter. OR	B.1 ----------NOTES---------- 1. Only applicable if the radioactivity/radionuclides are the result of plant effluents. 2. For radionuclides other than those in Table D 3.5.1-2, this report shall indicate the methodology and parameters used to estimate the potential annual dose to a MEMBER OF THE PUBLIC. ----------	

(continued)

ACTIONS (continued)

CONDITION	REQUIRED ACTION	COMPLETION TIME
More than one of the radionuclides in Table D 3.5.1-2 are detected in the environmental sampling medium and Concentration 1 / reporting level 1 + concentration 2 / reporting level 2 + ... ≥ 1.0. OR Radionuclides other than those in Table D 3.5.1-2 are detected in an environmental sampling medium at a specified location which are the result of plant effluents and the potential annual dose to a MEMBER OF THE PUBLIC from all radionuclides is ≥ the calendar year limits of D 3.1.2, D 3.2.2 or D 3.2.3.	Prepare and submit to the NRC, pursuant to D 4.1.1, a Special Report that (1) Identifies the cause(s) for exceeding the limit(s) and (2) Defines the corrective actions to be taken to reduce radioactive effluents so that the potential annual dose to a MEMBER OF THE PUBLIC is less than the calendar year limits of D 3.1.2, D 3.2.2, or D 3.2.3.	30 days
	OR	
	B.2 ----------NOTES---------- 1. Only applicable if the radioactivity/radionuclides are not the result of plant effluents. 2. For radionuclides other than those in Table D 3.5.1-2, this report shall indicate the methodology and parameters used to estimate the potential annual dose to a MEMBER OF THE PUBLIC. ---------- Report and describe the condition in the Annual Radiological Environmental Operating Report.	In accordance with the Annual Radiological Environmental Operating Report frequency

(continued)

ACTIONS (continued)

CONDITION	REQUIRED ACTION	COMPLETION TIME
C. Milk or fresh leafy vegetation samples unavailable from one or more of the sample locations required by Table D 3.5.1-1.	C.1 Identify specific locations for obtaining replacement samples and add them to the Radiological Environmental Monitoring Program.	30 days
	AND	
	C.2 Delete the specific locations from which samples were unavailable from the Radiological Environmental Monitoring Program.	30 days
	AND	
	C.3 Pursuant to Technical Specification 5.6.3, submit in the next Radioactive Effluent Release Report documentation for a change in the ODCM reflecting the new location(s) with supporting information identifying the cause of the unavailability of samples and justifying the selection of the new location(s) for obtaining samples.	In accordance with the Radioactive Effluent Release Report
D. Environmental samples required in Table D 3.5.1-1 are unobtainable due to sampling equipment malfunctions.	D.1 Ensure all efforts are made to complete corrective action(s).	Prior to the end of the next sampling period
	AND	
	D.2 Report all deviations from the sampling schedule in the Annual Radiological Environmental Operating Report.	In accordance with the Annual Radiological Environmental Operating Report

(continued)

ACTIONS (continued)

CONDITION	REQUIRED ACTION		COMPLETION TIME
E. Samples required by Table D 3.5.1-1 not obtained in the media of choice, at the most desired location, or at the most desired time.	E.1	Choose suitable alternative media and locations for the pathway in question.	30 days
	AND		
	E.2	Make appropriate substitutions in the Radiological Environmental Monitoring Program.	30 days
	AND		
	E.3	Submit in the next Radioactive Effluent Release Report documentation for a change in the ODCM reflecting the new location(s) with supporting information identifying the cause of the unavailability of samples for that pathway and justifying the selection of the new location(s) for obtaining samples.	In accordance with the Radioactive Effluent Release Report

SURVEILLANCE REQUIREMENTS

SURVEILLANCE		FREQUENCY
DSR 3.5.1.1	Collect and analyze radiological environmental monitoring samples pursuant to the requirements of Table D 3.5.1-1 and the detection capabilities required by Table D 3.5.1-3.	In accordance with Table D 3.5.1-1

Table D 3.5.1-1 (page 1 of 4)
Radiological Environmental Monitoring Program

EXPOSURE PATHWAY AND/OR SAMPLE	NUMBER OF SAMPLES STATIONS	SAMPLE LOCATIONS (a)	SAMPLING AND COLLECTION FREQUENCY	TYPE AND FREQUENCY OF ANALYSIS
1. Direct Radiation	32 routine monitoring stations (b)	(1) An inner ring of stations, one in each meteorological sector in the general area of the SITE BOUNDARY (2) An outer ring of stations, one in each land base meteorological sector in the 4 to 5 mile (c) range from the site (3) The balance of the stations should be placed in special interest areas such as population centers, nearby residences, schools, and in one or two areas to serve as control stations (d)	Once per 3 months	Gamma dose: once per 3 months
2. Airborne Radioiodine and Particulates	5 locations	(1) 3 samples from offsite locations close to the site boundary (within 1 mile) in different sectors (e) (2) 1 sample from the vicinity of an established year-round community (e) (3) 1 sample from a control location, at least 10 miles distant and in a least prevalent wind direction (d)	Continuous sampler operation with sample collection weekly or more frequently if required by dust loading	Radioiodine canister: Analyze weekly for I-131 Particulate sampler: (1) Analyze for gross beta radioactivity ≥ 24 hours following filter change (f). (2) Perform gamma isotopic analysis on each sample (g) in which gross beta activity is > 10 times the previous yearly mean of control samples. (3) Gamma isotopic analysis of composite sample (g) (by location) once per 3 months
3. Waterborne				
a. Surface	1 sample	Upstream (d) (h)	Composite sample over a one month period (i)	(1) Gamma isotopic analysis of each sample (g) once per month
	1 sample	Site's downstream cooling water intake (h)		(2) H-3 analysis of each composite sample and once per 3 months
b. Ground	As required	From one or two sources if likely to be affected (j)	Grab sample once per 3 months	(1) Gamma isotopic analysis of each sample (g) once per 3 months (2) H-3 analysis of each sample once per 3 months

(continued)

Table D 3.5.1-1 (page 2 of 4)
Radiological Environmental Monitoring Program

EXPOSURE PATHWAY AND/OR SAMPLE	NUMBER OF SAMPLES	SAMPLE LOCATIONS (a)	SAMPLING AND COLLECTION FREQUENCY	TYPE AND FREQUENCY OF ANALYSIS
3. Waterborne (continued)				
c. Drinking	1 sample of each	One to three of the nearest water supplies that could be affected by its discharge (k)	When I-131 analysis is performed, a composite sample over a two week period (i); otherwise, a composite sample monthly	(1) I-131 analysis on each composite sample when the dose calculated for the consumption of the water is greater than 1 mrem/yr (l) (2) Gross beta and gamma isotopic analyses of each composite sample (g) monthly (3) H-3 analysis of each composite sample once per 3 months
d. Sediment from Shoreline	1 sample	From a downstream area with existing or potential recreational value	Twice per year	Gamma isotopic analysis of each sample (g)
4. Ingestion				
a. Milk	(1) 3 samples from MILK SAMPLING LOCATIONS	In 3 locations within 3.5 miles (e)	Twice per month, April through December (m)	(1) Gamma isotopic (g) and I-131 analysis of each sample twice per month April through December
	(2) If there are none, then 1 sample from MILK SAMPLING LOCATIONS	In each of 3 areas 3.5-5.0 miles distant (e)		(2) Gamma isotopic (g) and I-131 analysis of each sample once per month January through March if required
	(3) 1 sample from a MILK SAMPLING LOCATION	At a control location 9-20 miles distant and in a least prevalent wind direction (d)		
b. Fish	(1) 1 sample each of 2 commercially or recreationally important species (n)	In the vicinity of a plant discharge area	Twice per year	Gamma isotopic analysis of each sample (g) on edible portions twice per year
	(2) 1 sample of the same species	In areas not influenced by station discharge (d)		

(continued)

Table D 3.5.1-1 (page 3 of 4)
Radiological Environmental Monitoring Program

EXPOSURE PATHWAY AND/OR SAMPLE	NUMBER OF SAMPLES	SAMPLE LOCATIONS (a)	SAMPLING AND COLLECTION FREQUENCY	TYPE AND FREQUENCY OF ANALYSIS
4. Ingestion (continued)				
c. Food Products	(1) 1 sample of each principal class of food products	Any area that is irrigated by water in which liquid plant wastes have been discharged (o)	At time of harvest (p)	Gamma isotopic (g) and I-131 analysis of each sample of edible portions
	(2) Samples of 3 different kinds of broad leaf vegetation (such as vegetables)	Grown nearest to each of 2 different offsite locations (e)	Once per year during the harvest season	
	(3) 1 sample of each of the similar broad leaf vegetation	Grown at least 9.3 miles distant in a least prevalent wind direction	Once per year during the harvest season	

Table D 3.5.1-1 (page 4 of 4)
Radiological Environmental Monitoring Program

(a) Specific parameters of distance and direction sector from the centerline of one reactor, and additional descriptions where pertinent, shall be provided for each and every sample location in Table D3.5.1-1. Refer to NUREG-0133, "Preparation of Radiological Effluent Technical Specifications for Nuclear Power Plants," October 1978, and to Radiological Assessment Branch Technical Position on Environmental Monitoring, Revision 1, November 1979. Deviations are permitted from the required sampling schedule if specimens are unobtainable because of such circumstances as hazardous conditions, seasonal unavailability (which includes theft and uncooperative residents), or malfunction of automatic sampling equipment.

(b) One or more instruments, such as a pressurized ion chamber, for measuring and recording dose rate continuously may be used in place of, or in addition to integrating dosimeters. Each of the 32 routine monitoring stations shall be equipped with 2 or more dosimeters or with 1 instrument for measuring and recording dose rate continuously. For the purpose of this table, a thermoluminescent dosimeter (TLD) is considered to be one phosphor; 2 or more phosphors in a packet are considered as 2 or more dosimeters. Film badges shall not be used as dosimeters for measuring direct radiation.

(c) At this distance, 8 windrose sectors (W, WNW, NW, NNW, N, NNE, NE, and ENE) are over Lake Ontario.

(d) The purpose of these samples is to obtain background information. If it is not practical to establish control locations in accordance with the distance and wind direction criteria, other sites, which provide valid background data, may be substituted.

(e) Having the highest calculated annual site average groundlevel D/Q based on all site licensed reactors.

(f) Airborne particulate sample filters shall be analyzed for gross beta activity 24 hours or more after sampling to allow for radon and thoron daughter decay.

(g) Gamma isotopic analysis means the identification and quantification of gamma-emitting radionuclides that may be attributable to the effluents from the facility.

(h) The upstream sample shall be taken at a distance beyond significant influence of the discharge. The downstream sample shall be taken in an area beyond but near the mixing zone.

(i) In this program, representative composite sample aliquots shall be collected at time intervals that are very short (e.g., hourly) relative to the compositing period (e.g., monthly) in order to assure obtaining a representative sample.

(j) Groundwater samples shall be taken when this source is tapped for drinking or irrigation purposes in areas where the hydraulic gradient or recharge properties are suitable for contamination.

(k) Drinking water samples shall be taken only when drinking water is a dose pathway.

(l) Analysis for I-131 may be accomplished by Ge-Li analysis provided that the lower limit of detection (LLD) for I131 in water samples found on Table D 3.5.1-2 can be met. Doses shall be calculated for the maximum organ and age group

(m) Samples will be collected January through March if I131 is detected in November and December of the preceding year.

(n) In the event 2 commercially or recreationally important species are not available, after 3 attempts of collection, then 2 samples of one species or other species not necessarily commercially or recreationally important may be utilized.

(o) Applicable only to major irrigation projects within 9 miles of the site in the general downcurrent direction.

(p) If harvest occurs more than once/year, sampling shall be performed during each discrete harvest. If harvest occurs continuously, sampling shall be taken monthly. Attention should be paid to including samples of tuberous and root food products.

Table D 3.5.1-2 (page 1 of 1)
Reporting Levels for Radioactivity in Environmental Samples

RADIONUCLIDE ANALYSIS	WATER (pCi/L)	AIRBORNE PARTIUCLATE OR GASES (pCi/m^3)	FISH (pCi/kg, wet)	MILK (pCi/L)	FOOD PRODUCTS (pCi/kg, wet)
H-3	20,000 (a)				
Mn-54	1,000		30,000		
Fe-59	400		10,000		
Co-58	1,000		30,000		
Co-60	300		10,000		
Zn-65	300		20,000		
Zr-95	400				
Nb-95	400				
I-131	2 (b)	0.9		3	100
Cs-134	30	10	1,000	60	1,000
Cs-137	50	20	2,000	70	2,000
Ba-140	200			300	
La-140	200			300	

(a) For drinking water samples. This is a 40 CFR 141 value. If no drinking water pathway exists, a value of 30,000 pCi/L may be used.

(b) If no drinking water pathway exists, a value of 20 pCi/L may be used.

Table D 3.5.1-3 (page 1 of 2)
Detection Capabilities for Environmental Sample Analysis [a] [b]

	LOWER LIMIT OF DETECTION (LLD)[c]					
RADIONUCLIDE ANALYSIS	WATER (pCi/L)	AIRBORNE PARTIUCLATE OR GASES (pCi/m^3)	FISH (pCi/kg, wet)	MILK (pCi/L)	FOOD PRODUCTS (pCi/kg, wet)	SEDIMENT (pCi/kg, dry)
Gross Beta	4	0.01				
H-3	2,000 [d]					
Mn-54	15		130			
Fe-59	30		260			
Co-58	15		130			
Co-60	15		130			
Zn-65	30		260			
Zr-95	15					
Nb-95	15					
I-131	1 [e]	0.07		1	60	
Cs-134	15	0.05	130	15	60	150
Cs-137	18	0.06	150	18	80	180
Ba-140	15			15		
La-140	15			15		

See the notes on the next page

Table 3.5.1-3 (page 2 of 2)
Detection Capabilities for Environmental Sample Analysis [(a) (b)]

(a) This list does not mean that only these nuclides are to be considered. Other peaks that are identifiable, together with those of the above nuclides, shall also be analyzed and reported in the Annual Radiological EnvironmentalOperating Report.

(b) Required detection capabilities for thermoluminescent dosimeters used for environmental measurements are given in ANSI N-545, Section 4.3 1975. Allowable exceptions to ANSI N-545, Section 4.3 are contained in the ODCM.

(c) The LLD is defined as the smallest concentration of radioactive material in a sample that will yield a net count, above system background, that will be detected with 95% probability with only 5% probability of falsely concluding that a blank observation represents a "real" signal.

For a particular measurement system, which may include radiochemical separation:

$$LLD = \frac{(4.66)(S_b)}{(E)(V)(2.22)(Y)e^{-\lambda\Delta t}}$$

where:

LLD	=	The before-the-fact lower limit of detection (pCi per unit mass or volume),
S_b	=	The standard deviation of the background counting rate or of the counting rate of a blank sample as appropriate (counts per minute),
E	=	The counting efficiency (counts per disintegration),
V	=	The sample size (units of mass or volume),
2.22	=	The number of disintegrations per minute per pCi,
Y	=	The fractional radiochemical yield, when applicable,
λ	=	The radioactive decay constant for the particular radionuclide (sec^{-1}), and
Δt	=	The elapsed time between environmental collection or end of the sample collection period, and the time of counting (seconds).

Typical values of E, V, Y, and Δt should be used in the calculation.

It should be recognized that the LLD is defined as a beforethe-fact limit representing the capability of a measurement system and not as an after-the-fact limit for a particular measurement. Analyses shall be performed in such a manner that the stated LLDs will be achieved under routine conditions. Occasionally background fluctuations, unavoidable small sample sizes, the presence of interfering nuclides, or other uncontrollable circumstances may render these LLDs unachievable. In such cases, the contributing factors shall be identified and described in the Annual Radiological Environmental Operating Report.

(d) If no drinking water pathway exists, a value of 3,000 pCi/L may be used.

(e) If no drinking water pathway exists, a value of 15 pCi/L may be used.

D 3.5 RADIOLOGICAL ENVIRONMENTAL MONITORING

D 3.5.2 Land Use Census

DLCO 3.5.2 A land use census shall:

a. Be conducted,

b. Identify within a distance of 5 miles the location in each of the 16 meteorological sectors of the nearest milk animal and the nearest residence, and the nearest garden (broad leaf vegetation sampling controlled by Table D 3.5.1-1, part 5.c may be performed in lieu of the garden census) of > 500 ft^2 producing broad leaf vegetation, and

c. For elevated releases, identify within a distance of 3 miles the locations in each of the 16 meteorological sectors of all milk animals and all gardens (broad leaf vegetation sampling controlled by Table D 3.5.1-1, part 5.c may be performed in lieu of the garden census) > 500 ft^2 producing broad leaf vegetation.

APPLICABILITY: At all times.

ACTIONS

NOTES

1. LCO 3.0.3 is not applicable.
2. LCO 3.0.4 is not applicable.

CONDITION	REQUIRED ACTION	COMPLETION TIME
A. Land use census identifies location(s) that yields a calculated dose, dose commitment, or D/Q value > than the values currently being calculated in DSR 3.2.3.1.	A.1 Identify the new location(s) in the next Radioactive Effluent Release Report.	In accordance with the Radioactive Effluent Release Report

(continued)

ACTIONS (continued)

CONDITION	REQUIRED ACTION	COMPLETION TIME
B. Land use census identifies location(s) that yields a calculated dose, dose commitment, or D/Q value (via the same exposure pathway) 50% > than at a location from which samples are currently being obtained in accordance with Table D 3.5.1-1.	B.1 Add the new location(s) to the Radiological Environmental Monitoring Program.	30 days
	AND	
	B.2 Delete the sampling location(s), excluding the control station location, having the lowest calculated dose, dose commitment(s) or D/Q value, via the same exposure pathway, from the Radiological Environmental Monitoring Program.	After October 31 of the year in which the land use census was conducted
	AND	
	B.3 Submit in the next Radioactive Effluent Release Report documentation for a change in the ODCM including revised figure(s) and table(s) for the ODCM reflecting the new location(s) with information supporting the change in sampling locations.	In accordance with the Radioactive Effluent Release Report

SURVEILLANCE REQUIREMENTS

SURVEILLANCE		FREQUENCY
DSR 3.5.2.1	Conduct the land use census during the growing season using that information that will provide the best results, such as by a door-to-door survey, aerial survey, or by consulting local agriculture authorities.	366 days
DSR 3.5.2.2	Report the results of the land use census in the Annual Radiological Environmental Operating Report.	In accordance with the Annual Radiological Environmental Operating Report

D 3.5 RADIOLOGICAL ENVIRONMENTAL MONITORING

D 3.5.3 Interlaboratory Comparison Program

DLCO 3.5.3 The Interlaboratory Comparison Program shall be described in the ODCM.

AND

Analyses shall be performed on all radioactive materials, supplied as part of an Interlaboratory Comparison Program that has been approved by the NRC, that correspond to samples required by Table D 3.5.1-1. Participation in this program shall include media for which environmental samples are routinely collected and for which intercomparison samples are available.

APPLICABILITY: At all times.

ACTIONS

---------- NOTES ----------

1. LCO 3.0.3 is not applicable.

2. LCO 3.0.4 is not applicable.

CONDITION	REQUIRED ACTION	COMPLETION TIME
A. Analyses not performed as required.	A.1 Report the corrective actions taken to prevent a recurrence to the NRC in the Annual Radiological Environmental Operating Report.	In accordance with the Annual Radiological Environmental Operating Report

SURVEILLANCE REQUIREMENTS

SURVEILLANCE		FREQUENCY
DSR 3.5.3.1	Report a summary of the results obtained as part of the Interlaboratory Comparison Program in the Annual Radiological Environmental Operating Report.	In accordance with the Annual Radiological Environmental Operating Report

PART I - RADIOLOGICAL EFFLUENT CONTROLS

BASES

B 3.1 RADIOACTIVE LIQUID EFFLUENTS

B 3.1.1 Liquid Effluents Concentration

BASES

This is provided to ensure that the concentration of radioactive materials released in liquid waste effluents to UNRESTRICTED AREAS will be less than ten times the concentration levels specified in 10 CFR 20, Appendix B, Table 2, Column 2. This limitation provides additional assurance that the levels of radioactive materials in bodies of water in UNRESTRICTED AREAS will result in exposures within: (1) the Section II.A design objectives of Appendix I to 10 CFR 50, to a MEMBER OF THE PUBLIC and (2) the levels required by 10 CFR 20.1301(e) to the population. The concentration limit for dissolved or entrained noble gases is based upon the assumption that Xe-135 is the controlling radioisotope and its effluent concentration in air (submersion) was converted to an equivalent concentration in water using the methods described in International Commission on Radiological Protection (ICRP) Publication 2.

This applies to the release of radioactive materials in liquid effluents from all units at the site.

The required detection capabilities for radioactive materials in liquid waste samples are tabulated in terms of the lower limits of detection (LLDs). Detailed discussion of the LLD, and other detection limits can be found in L. A. Currie, "Lower Limit of Detection: Definition and Elaboration of a Proposed Position for Radiological Effluent and Environmental Measurements," NUREG/CR-4007 (September 1984), and in the HASL Procedures Manual, HASL-300 (revised annually).

B 3.1 RADIOACTIVE LIQUID EFFLUENTS

B 3.1.2 Liquid Effluents Dose

BASES

This is provided to implement the requirements of Sections II.A, III.A, and IV.A of Appendix I to 10 CFR 50. This implements the guides set forth in Section II.A of Appendix I. The ACTION statements provide the required operating flexibility and at the same time implement the guides set forth in Section IV.A of Appendix I to assure that the releases of radioactive materials in liquid effluents to UNRESTRICTED AREAS will be kept as low as is reasonably achievable. Also, for fresh water sites with drinking water supplies that can be potentially affected by plant operations, there is reasonable assurance that the operation of the facility will not result in radionuclide concentrations in the potable drinking water that are in excess of the requirements of 40 CFR 141. For sites containing up to four reactors, it is highly unlikely that the resultant dose to a MEMBER OF THE PUBLIC will exceed the dose limits of 40 CFR 190 if the individual reactors remain within twice the dose design objectives of Appendix I, and if direct radiation doses from the units including outside storage tanks, etc., are kept small. The Special Report will describe a course of action that should result in the limitation of the annual dose to a MEMBER OF THE PUBLIC to within the 40 CFR 190 limits. For the purposes of the Special Report, it may be assumed that the dose commitment to the MEMBERS OF THE PUBLIC from other uranium fuel cycle sources is negligible, with the exception that dose contributions from other nuclear fuel cycle facilities at the same site or within a radius of 5 miles must be considered. The dose calculation methodology and parameters implement the requirements in Section III.A of Appendix I that conformance with the guides of Appendix I be shown by Calculational procedures based on models and data, so that the actual exposure of a MEMBER OF THE PUBLIC through appropriate pathways is unlikely to be substantially underestimated. The equations specified for calculating the doses that result from actual release rates of radioactive material in liquid effluents are consistent with the methodology provided in RG 1.109, "Calculation of Annual Doses To Man from Routine Releases of Reactor Effluents for the Purpose of Evaluating Compliance with 10 CFR Part 50, Appendix I," Revision 1, October 1977 and R.G. 1.113, "Estimating Aquatic Dispersion of Effluents from Accidental and Routine Reactor Releases for the Purpose of Implementing Appendix I," April 1977. This applies to the release of radioactive materials in liquid effluents from each unit at the site. For units with shared radwaste treatment systems, the liquid effluents from the shared system are to be proportioned among the units sharing that system.

B 3.1 RADIOACTIVE LIQUID EFFLUENTS

B 3.1.3 Liquid Radwaste Treatment System

BASES

The installed liquid radwaste treatment system shall be considered FUNCTIONAL by meeting DLCO 3.1.1 and DLCO 3.1.2. The FUNCTIONALITY of the liquid radwaste treatment system ensures that this system will be available for use whenever liquid effluents require treatment before release to the environment. The requirement that the appropriate portions of this system be used when specified provides assurance that the releases of radioactive materials in liquid effluents will be kept as low as is reasonably achievable. This implements the requirements of 10 CFR 50.36a, GDC 60 of Appendix A to 10 CFR 50 and the design objective given in Section II.D of Appendix I to 10 CFR 50. The specified limits governing the use of appropriate portions of the liquid radwaste treatment system were specified as a suitable fraction of the dose design objectives set forth in Section II.A of Appendix I to 10 CFR 50 for liquid effluents. This applies to the release of radioactive materials in liquid effluents from each unit at the site. For units with shared radwaste treatment systems, the liquid effluents from the shared system are to be proportioned among the units sharing that system.

B 3.2 RADIOACTIVE GASEOUS EFFLUENTS

B 3.2.1 Gaseous Effluents Dose Rate

BASES

This is provided to ensure that the dose rate at any time at and beyond the SITE BOUNDARY from gaseous effluents from all units on the site will be within the annual dose limits of 10 CFR 20 to UNRESTRICTED AREAS.

The annual dose limits are the doses associated with the concentrations of 10 CFR 20, Appendix B, Table 2, Column 1. These limits provide reasonable assurance that radioactive material discharged in gaseous effluents will not result in the exposure of a MEMBER OF THE PUBLIC in an UNRESTRICTED AREA, either within or outside the SITE BOUNDARY, to annual average concentrations exceeding the limits specified in Appendix B, Table 2 of 10 CFR 20 or as governed by 10 CFR 20.1302(c). For MEMBERS OF THE PUBLIC who may at times be within the SITE BOUNDARY, the occupancy of that MEMBER OF THE PUBLIC will usually be sufficiently low to compensate for any increase in the atmospheric diffusion factor above that for the SITE BOUNDARY. Examples of calculations for such MEMBERS OF THE PUBLIC, with the appropriate occupancy factors, shall be given in Part II. The specified release rate limits restrict, at all times, the corresponding gamma and beta dose rates above background to a MEMBER OF THE PUBLIC at or beyond the SITE BOUNDARY to less than or equal to 500 mrem/year to the whole body or to less than or equal to 3000 mrem/year to the skin. These release rate limits also restrict, at all times, the corresponding thyroid dose rate above background to a child via the inhalation pathway to less than or equal to 1500 mrem/year. This applies to the release of radioactive materials in gaseous effluents from all units at the site.

The required detection capabilities for radioactive materials in gaseous waste samples are tabulated in terms of the lower limits of detection (LLDs). Detailed discussion of the LLD, and other detection limits can be found in L. A. Currie, "Lower Limit of Detection: Definition and Elaboration of a Proposed Position for Radiological Effluent and Environments Measurements," NUREG/CR-4007 (September 1984), and in the HASL Procedures Manual, HASL-300 (revised annually).

B 3.2 RADIOACTIVE GASEOUS EFFLUENTS

B 3.2.2 Gaseous Effluents Noble Gas Dose

BASES

This is provided to implement the requirements of Section II.B, III.A, and IV.A of Appendix I to 10 CFR 50. The DLCO implements the guides set forth in Section II.B of Appendix I. The REQUIRED ACTIONS provide the required operating flexibility and, at the same time, implement the guides set forth in Section IV.A of Appendix I to assure that the releases of radioactive material in gaseous effluents to UNRESTRICTED AREAS will be kept as low as is reasonably achievable. The Surveillance Requirements implement the requirements in Section III.A of Appendix I that conformance with the guidelines of Appendix I be shown by calculational procedures based on models and data so that the actual exposure of a MEMBER OF THE PUBLIC through appropriate pathways is unlikely to be substantially underestimated. For sites containing up to four reactors, it is highly unlikely that the resultant dose to a MEMBER OF THE PUBLIC will exceed the dose limits of 40 CFR 190 if the individual reactors remain within twice the dose design objectives of Appendix I, and if direct radiation doses from the units including outside storage tanks, etc., are kept small. The Special Report will describe a course of action that should result in the limitation of the annual dose to a MEMBER OF THE PUBLIC to within the 40 CFR 190 limits. For the purposes of the Special Report, it may be assumed that the dose commitment to the MEMBER OF THE PUBLIC from other uranium fuel cycle sources is negligible, with the exception that dose contributions from other nuclear fuel cycle facilities at the same site or within a radius of 5 miles must be considered. The dose calculation methodology and parameters for calculating the doses from the actual release rates of radioactive noble in gaseous effluents are consistent with the methodology provided in RG 1.109, "Calculation of Annual Doses to Man from Routine Releases of Reactor Effluents for the Purpose of Evaluating Compliance with 10 CFR Part 50, Appendix I," Revision 1, October 1977, and RG 1.111, "Methods for Estimating Atmospheric Transport and Dispersion of Gaseous Effluents in Routine Releases from Light-Water Cooled Reactors," Revision 1," July 1977. The ODCM equations provided for determining the air doses at or beyond the SITE BOUNDARY are based upon real-time meteorological conditions or the historical average atmospheric conditions. This applies to the release of radioactive material in gaseous effluents from each unit at the site.

B 3.2 RADIOACTIVE GASEOUS EFFLUENTS

B 3.2.3 Gaseous Effluents Dose – Iodine-131, Iodine-133, Tritium, and Radioactive Material In Particulate Form

BASES

This is provided to implement the requirements of Sections II.C, III.A, and IV.A of Appendix I to 10 CFR 50. The DLCO implements the guides set forth in Section II.C of Appendix I. The REQUIRED ACTIONS provide the required operating flexibility and at the same time implement the guides set forth in Section IV.A of Appendix I to assure that the releases of radioactive materials in gaseous effluents to UNRESTRICTED AREAS will be kept as low as is reasonably achievable. The calculational methods specified in the Surveillance Requirements implement the requirements in Section III.A of Appendix I that conformance with the guides of Appendix I be shown by calculational procedures based on models and data, so that the actual exposure of a MEMBER OF THE PUBLIC through appropriate pathways is unlikely to be substantially underestimated. . For sites containing up to four reactors, it is highly unlikely that the resultant dose to a MEMBER OF THE PUBLIC will exceed the dose limits of 40 CFR 190 if the individual reactors remain within twice the dose design objectives of Appendix I, and if direct radiation doses from the units including outside storage tanks, etc., are kept small. The Special Report will describe a course of action that should result in the limitation of the annual dose to a MEMBER OF THE PUBLIC to within the 40 CFR 190 limits. For the purposes of the Special Report, it may be assumed that the dose commitment to the MEMBER OF THE PUBLIC from other uranium fuel cycle sources is negligible, with the exception that dose contributions from other nuclear fuel cycle facilities at the same site or within a radius of 5 miles must be considered. The calculational methodology and parameters for calculating the doses from the actual release rates of the subject materials are consistent with the methodology provided in RG 1.109, "Calculation of Annual Doses to Man from Routine Releases of Reactor Effluents for the Purpose of Evaluating Compliance with 10 CFR Part 50, Appendix I, " Revision 1, October 1977, and RG 1.111, "Methods for Estimating Atmospheric Transport and Dispersion of Gaseous Effluents in Routine Releases from Light-Water-Cooled Reactors," Revision 1, July 1977. These equations also provide for determining the actual doses based upon the historical average atmospheric conditions. The release rate DLCO for iodine-131, iodine-133, tritium, and radioactive material in particulate form with half-lives greater than 8 days are dependent upon the existing radionuclide pathways to man, in the areas at or beyond the SITE BOUNDARY. The pathways that were examined in the development of these calculations were: (1) individual inhalation of airborne radioactive material, (2) deposition of radioactive material onto green leafy vegetation

B 3.2.3 Gaseous Effluents Dose – Iodine-131, Iodine-133, Tritium, and Radioactive Material In Particulate Form (continued)

with subsequent consumption by man, (3) deposition onto grassy areas where milk-producing animals and meat-producing animals graze (human consumption of the milk and meat is assumed), and (4) deposition on the ground with subsequent exposure to man. This applies to the release of radioactive materials in gaseous effluents from each unit at the site. For units with shared radwaste treatment systems, the gaseous effluents from the shared system are proportioned among the units sharing that system.

B 3.2 RADIOACTIVE GASEOUS EFFLUENTS

B 3.2.4 Gaseous Radwaste Treatment System

BASES

The FUNCTIONALITY of the GASEOUS RADWASTE TREATMENT SYSTEM ensures that the system will be available for use whenever gaseous effluents require treatment before release to the environment. The requirement that the appropriate portions of this system be used, when specified, provides reasonable assurance that the releases of radioactive materials in gaseous effluents will be kept as low as is reasonably achievable. This implements the requirements of 10 CFR 50.36a, GDC 60 of Appendix A to 10 CFR 50, and the design objectives given in Section II.D of Appendix I to 10 CFR 50. Limits governing the use of appropriate portions of the system were specified as a suitable fraction of the dose design objectives set forth in Sections II.B and II.C of Appendix I to 10 CFR 50, for gaseous effluents. This applies to the release of radioactive materials in gaseous effluents from each unit at the site. For units with shared radwaste treatment systems, the gaseous effluents from the shared system are proportional among the units sharing that system.

B 3.2 RADIOACTIVE GASEOUS EFFLUENTS

B 3.2.5 Ventilation Exhaust Treatment System

BASES

The FUNCTIONALITY of the VENTILATION EXHAUST TREATMENT SYSTEM ensures that the system will be available for use whenever gaseous effluents require treatment before release to the environment. The requirement that the appropriate portions of this system be used, when specified, provides reasonable assurance that the releases of radioactive materials in gaseous effluents will be kept as low as is reasonably achievable. This implements the requirements of 10 CFR 50.36a, GDC 60 of Appendix A to 10 CFR 50, and the design objectives given in Section II.D of Appendix I to 10 CFR 50. Limits governing the use of appropriate portions of the system were specified as a suitable fraction of the dose design objectives set forth in Sections II.B and II.C of Appendix I to 10 CFR 50, for gaseous effluents. This applies to the release of radioactive materials in gaseous effluents from each unit at the site. For units with shared radwaste treatment systems, the gaseous effluents from the shared system are proportional among the units sharing that system.

The appropriate components, which affect iodine or particulate release, to be FUNCTIONAL are:

1) HEPA Filter – Radwaste Decon Area
2) HEPA Filter – Radwaste Equipment Area
3) HEPA Filter – Radwaste General Area

Whenever one of these filters is not FUNCTIONAL, iodine and particulate dose projections will be made for 31-day intervals starting with filter nonfunctionality, and continuing as long as the filter remains nonfunctional, in accordance with DSR 3.2.5.1.

B 3.2 RADIOACTIVE GASEOUS EFFLUENTS

B 3.2.6 Venting or Purging

BASES

This provides reasonable assurance that releases from drywell and/or suppression chamber purging operations will not exceed the annual dose limits of 10 CFR 20 for unrestricted areas.

B 3.3 INSTRUMENTATION

B 3.3.1 Radioactive Liquid Effluent Monitoring Instrumentation

BASES

The radioactive liquid effluent instrumentation is provided to monitor and control, as applicable, the releases of radioactive materials in liquid effluents during actual or potential releases of liquid effluents. The alarm/trip setpoints for these instruments shall be calculated and adjusted in accordance with the methodology and parameters in Part II to ensure that the alarm/trip will occur before exceeding ten times the limits of 10 CFR 20. The FUNCTIONALITY and use of this instrumentation is consistent with the requirements of GDC 60, 63, and 64 of Appendix A to 10 CFR 50. The purpose of tank level indicating devices is to assure the detection and control of leaks that if not controlled could potentially result in the transport of radioactive materials to UNRESTRICTED AREAS.

Tanks included are those outdoor tanks that are not surrounded by liners, dikes, or walls capable of holding the tank contents and do not have tank overflows and surrounding area drains connected to the liquid radwaste treatment system, such as temporary tanks.

B 3.3 INSTRUMENTATION

B 3.3.2 Radioactive Gaseous Effluent Monitoring Instrumentation

BASES

The radioactive gaseous effluent instrumentation is provided to monitor and control, as applicable, the releases of radioactive materials in gaseous effluents during actual or potential releases of gaseous effluents. The alarm/trip setpoints for these instruments shall be calculated and adjusted in accordance with the methodology and parameters in Part II to ensure that the alarm/trip will occur before exceeding the limits of 10 CFR 20. Although the Offgas System Noble Gas Activity Monitor is listed in Table D 3.3.2-1, "Radioactive Gaseous Effluent Monitoring Instrumentation", these monitors are actually located upstream of the Main Stack noble gas activity monitor and are not effluent monitors. They were included in Table D 3.3.2-1 in accordance with NUREG-0473. As such, Offgas System Noble Gas Activity Monitor alarm and trip setpoints are not based on 10CFR20. The offgas system noble gas monitor alert setpoint is set at 1.5 times nominal full power background to assure compliance with ITS SR 3.7.4.1 which requires offgas sampling be performed within four hours of a 50% increase in offgas monitoring readings, and to support MSLRM trip removal. The offgas system noble gas monitor trip setpoint is based on the 10CFR100 limits for the limiting design basis gaseous waste system accident which is the offgas system rupture. The range of the noble gas channels of the main stack and radwaste/reactor building vent effluent monitors is sufficiently large to envelope both normal and accident levels of noble gas activity. The capabilities of these instruments are consistent with the recommendations of Regulatory Guide 1.97, "Instrumentation for Light Water Cooled Nuclear Power Plants to Assess Plant Conditions During and Following an Accident," December 1980 and NUREG-0737, "Clarification of the TMI Action Plan Requirements," November 1980. This instrumentation also includes provisions for monitoring and controlling the concentrations of potentially explosive gas mixtures in the offgas system. The FUNCTIONALITY and use of this instrumentation is consistent with the requirements of GDC 60, 63, and 64 of Appendix A to 10 CFR 50.

B 3.4 RADIOACTIVE EFFLUENTS TOTAL DOSE

BASES

This is provided to meet the dose limitations of 40 CFR 190 that have been incorporated into 10 CFR 20 by 46 FR 18525. This requires the preparation and submittal of a Special Report whenever the calculated doses from releases of radioactivity and from radiation from uranium fuel cycle sources exceed 25 mrem to the whole body or any organ, except the thyroid (which shall be limited to less than or equal to 75 mrem). If the dose to any MEMBER OF THE PUBLIC is estimated to exceed the requirements of 40 CFR 190, the Special Report with a request for a variance (provided the release conditions resulting in violation of 40 CFR 190 have not already been corrected), in accordance with the provisions of 40 CFR 190.11 and 10 CFR 20.405c, is considered to be a timely request and fulfills the requirements of 40 CFR 190 until NRC staff action is completed. The variance only relates to the limits of 40 CFR 190, and does not apply in any way to the other requirements for dose limitation of 10 CFR 20, as addressed in 3.1.1 and 3.2.1. An individual is not considered a MEMBER OF THE PUBLIC during any period in which the individual is engaged in carrying out any operation that is part of the nuclear fuel cycle.

B 3.5 RADIOLOGICAL ENVIRONMENTAL MONITORING

B 3.5.1 Monitoring Program

BASES

The Radiological Environmental Monitoring Program provides representative measurements of radiation and of radioactive materials in those exposure pathways and for those radionuclides that lead to the highest potential radiation exposure of MEMBERS OF THE PUBLIC resulting from the plant operation. This monitoring program implements Section IV.B.2 of Appendix I to 10 CFR 50 and thereby supplements the Radiological Effluent Monitoring Program by verifying that the measurable concentrations of radioactive materials and levels of radiation are not higher than expected on the basis of the effluent measurements and the modeling of the environmental exposure pathways. Guidance for this monitoring program is provided by the Radiological Assessment Branch Technical Position on Environmental Monitoring, Revision 1, November 1979. Program changes may be initiated based on operational experience.

The required detection capabilities for environmental sample analyses are tabulated in terms of the lower limits of detection (LLDs). The LLDs required by Table D 3.5.1-3 are considered optimum for routine environmental measurements in industrial laboratories. It should be recognized that the LLD is defined as a before-the-fact limit representing the capability of a measurement system and not as an after-the-fact limit for a particular measurement.

Detailed discussion of the LLD, and other detection limits, can be found in L. A. Currie, "Lower Limit of Detection: Definition and Elaboration of a Proposed Position for Radiological Effluent and Environmental Measurements," NUREG/CR-4007 (September 1984), and in the HASL Procedures Manual, HASL-300 (revised annually).

B 3.5 RADIOLOGICAL ENVIRONMENTAL MONITORING

B 3.5.2 Land Use Census

BASES

This is provided to ensure that changes in the use of areas at or beyond the SITE BOUNDARY are identified and that modifications to the Radiological Environmental Monitoring Program are made if required by the results of this census. The best information, such as from a door-to-door survey, from an aerial survey, or from consulting with local agricultural authorities, shall be used. This census satisfies the requirements of Section IV.B.3 of Appendix I to 10 CFR 50. Restricting the census to gardens of greater than 500 square feet provides assurance that significant exposure pathways via leafy vegetables will be identified and monitored since a garden of this size is the minimum required to produce the quantity (26 kg/year) of leafy vegetables assumed in RG 1.109 for consumption by a child. To determine this minimum garden size, the following assumptions were made: (1) 20% of the garden was used for growing broad leaf vegetation (i.e., similar to lettuce and cabbage) and (2) the vegetation yield was 2 kg/m^2.

A MILK SAMPLING LOCATION, as defined in Section 1.0, requires that at least 10 milking cows are present at a designated milk sample location. It has been found from past experience, and as a result of conferring with local farmers, that a minimum of 10 milking cows is necessary to guarantee an adequate supply of milk twice a month for analytical purposes. Locations with fewer than 10 milking cows are usually utilized for breeding purposes, eliminating a stable supply of milk for samples as a result of suckling calves and periods when the adult animals are dry. Elevated releases are defined in RG 1.111, Revision 1, July 1977.

B 3.5 RADIOLOGICAL ENVIRONMENTAL MONITORING

B 3.5.3 Interlaboratory Comparison Program

BASES

The requirement for participation in an approved Interlaboratory Comparison Program is provided to ensure that independent checks on the precision and accuracy of the measurements of radioactive materials in environmental sample matrices are performed as part of the quality assurance program for environmental monitoring in order to demonstrate that the results are valid for the purposes of Section IV.B.2 of Appendix I to 10 CFR 50.

PART I - RADIOLOGICAL EFFLUENT CONTROLS

SECTION 4.0 ADMINISTRATIVE CONTROLS

4.0 ADMINISTRATIVE CONTROLS

The ODCM Specifications are subject to Technical Specifications Section 5.5.4, "Radioactive Effluent Controls Program," Section 5.6.2, "Annual Radiological Environmental Operating Report," Section 5.6.3, "Radioactive Effluent Release Report," and Section 5.5.1, "Offsite Dose Calculation Manual."

D 4.1 REPORTING REQUIREMENTS

D 4.1.1 Special Reports

Special Reports shall be submitted in accordance with 10 CFR 50.4 within the time period specified for each report.

D 4.1.2 Annual Radiological Environmental Operating Reports

In addition to the requirements of Technical Specification 5.6.2 the report shall also include the following:

A summary description of the Radiological Environmental Monitoring Program; at least two legible maps, one shall cover stations near the SITE BOUNDARY and the second shall include the more distant stations, covering all sample locations keyed to a table giving distances and directions from the centerline of one reactor; the results of license participation in the Interlaboratory Comparison Program, required by Control D 3.5.3; discussion of all deviations from the Sampling Schedule of Table D 3.5.1-1; and discussion of all analysis in which the LLD required by Table D 3.5.1-3 was not achievable.

D 4.1.3 Radioactive Effluent Release Report

The Radiological Effluent Release Report described in Technical Specification section 5.6.3 shall include:

- An annual summary of hourly meteorological data collected over the previous year. This annual summary may be either in the form of an hour-by-hour listing on magnetic tape of wind speed, wind direction, atmospheric stability, and precipitation (if measured), or in the form of joint frequency distribution of wind speed, wind direction, and atmospheric stability. In lieu of submission with the Radiological Effluent Release Report, the licensee has the option of retaining this summary of required meteorological data on site in a file that shall be provided to the NRC upon request.
- An assessment of radiation doses from the radioactive liquid and gaseous effluents released from the unit during the previous year.

(Continued)

D 4.1.3 Radioactive Effluent Release Report (continued)

- As assessment of radiation doses from the radioactive liquid and gaseous effluents to MEMBERS OF THE PUBLIC from their activities inside the SITE BOUNDARY during the report period. All assumptions used in making these assessments, i.e., specific activity, exposure time, and location shall be included in these reports. The assessment of radiation doses shall be performed in accordance with the methodology and parameters in Part II.
- As assessment of doses to the likely most exposed MEMBER OF THE PUBLIC from reactor releases and other nearby uranium fuel cycle sources, including doses from primary effluent pathways and direct radiation, for the previous calendar year to show conformance with 40 CFR 190, "Environmental Radiation Protection Standards for Nuclear Power Operation." Acceptable methods for calculating the dose contribution from liquid and gaseous effluents are given in Part II.
- A list of unplanned releases from the site to UNRESTRICTED AREAS of radioactive materials in gaseous and liquid effluents made during the reporting period.
- Any changes made during the reporting period to the PROCESS CONTROL PROGRAM and to the OFFSITE DOSE CALCULATION MANUAL (ODCM).
- Any major changes to liquid, gaseous, or solid radwaste treatment systems pursuant to D 4.2.
- A listing of new locations for dose calculations and/or environmental monitoring identified by the land use census pursuant to Control D 3.5.2.
- An explanation of why the nonfunctionality of liquid or gaseous effluent monitoring instrumentation was not corrected within the time specified in Controls D 3.3.1 and D 3.3.2.
- Description of events leading to liquid holdup tanks exceeding the limits of TRM 3.7.7.

D 4.2 MAJOR CHANGES TO LIQUID, GASEOUS, AND SOLID RADWASTE TREATMENT SYSTEM

----------NOTE----------
Licensees may choose to submit this information as part of the annual FSAR update.

Licensee-initiated major changes to the radwaste treatment systems (liquid, gaseous, and solid):

a. Shall be reported to the Commission in the Radioactive Effluent Release report for the period in which the evaluation was reviewed by the SORC. The discussion of each change shall contain:

   1. A summary of the evaluation that led to the determination that the change could be made in accordance with 10 CFR 50.59.

   2. Sufficient detailed information to totally support the reason for the change without benefit of additional or supplemental information;

   3. A detailed description of the equipment, components, and processes involved and the interfaces with other plant systems;

   4. An evaluation of the change, which shows the predicted releases of radioactive materials in liquid and gaseous effluents and/or quantity of solid waste that differ from those previously predicted in the license application and amendments thereto;

   5. An evaluation of the change, which shows the expected maximum exposures to a MEMBER OF THE PUBLIC in the UNRESTRICTED AREA and to the general population that differ from those previously estimated in the license application and amendments thereto;

   6. A comparison of the predicted releases of radioactive materials, in liquid and gaseous effluents and in solid waste, to the actual releases for the period that precedes the time when the change is to be made;

   7. An estimate of the exposure to plant operating personnel as a result of the change; and

(Continued)

D 4.2 MAJOR CHANGES TO LIQUID, GASEOUS, AND SOLID RADWASTE TREATMENT SYSTEM (continued)

8. Documentation of the fact that the change was reviewed and found acceptable by the SORC.

b. Shall become effective upon review and acceptance by the SORC.

PART II - CALCULATIONAL METHODOLOGIES

1.0 LIQUID EFFLUENTS

Service Water A and B, Cooling Tower Blowdown and the Liquid Radioactive Waste Discharges comprise the Radioactive Liquid Effluents at Unit 2. Presently there are no temporary outdoor tanks containing radioactive water capable of affecting the nearest known or future water supply in an unrestricted area. NUREG 0133 and Regulatory Guide 1.109, Rev. 1 were followed in the development of this section.

1.1 Liquid Effluent Monitor Alarm Setpoints

1.1.1 Basis

The concentration of radioactive material released in liquid effluents to UNRESTRICTED AREAS (see Figure D 1.0-1) shall be limited to ten times the concentrations specified in 10 CFR 20, Appendix B, Table 2, Column 2, for radionuclides other than dissolved or entrained noble gases. For dissolved or entrained nobles gases, the concentration shall be limited to 2E-04 uCi/ml total activity.

1.1.2 Setpoint Determination Methodology

1.1.2.1 Liquid Radwaste Effluent Radiation Alarm Setpoint

The Liquid Radioactive Waste System Tanks are pumped to the discharge tunnel which in turn flows directly to Lake Ontario. At the end of the discharge tunnel in Lake Ontario, a diffuser structure has been installed. Its purpose is to maintain surface water temperatures low enough to meet thermal pollution limits. However, it also assists in the near field dilution of any activity released. Service Water and the Cooling Tower Blowdown are also pumped to the discharge tunnel and will provide dilution. If the Service Water or the Cooling Tower Blowdown is found to be contaminated, then its activity will be accounted for when calculating the permissible radwaste effluent flow for a Liquid Radwaste discharge. The Liquid Radwaste System Monitor provides alarm and automatic termination of release if radiation levels above its alarm setpoint are detected.

The radiation detector is a sodium iodide crystal. It is a scintillation device. The crystal is sensitive to gamma and beta radiation. However, because of the metal walls of the sample chamber and the absorption characteristics of water, the monitor is not particularly sensitive to beta radiation. Actual detector response $\sum_i (CG_i/CF_i)$, cpm, has been evaluated by placing a sample of typical radioactive waste into the monitor and recording the gross count rate, cpm. A calibration ratio was developed by dividing the noted detector response, $\sum_i (CG_i/CF_i)$ cpm, by total concentration of activity $\sum_i (CG_i)$, uCi/cc. The quantification of the gamma activity was completed with gamma spectrometry equipment whose calibration is traceable to NIST. This calibration ratio verified the manufacturer's prototype calibration, and any subsequent transfer calibrations performed. The current calibration factor (expressed as the reciprocal conversion factor, uCi/ml/cpm), will be used for subsequent setpoint calculations in the determination of detector response:

$$\sum_i (CG_i/CF_i) = \sum_i (CG_i)/CF$$

Where the factors are as defined above.

The calculations of the required dilution factors (RDF) are performed as follows:

$$RDF_{\gamma} = \sum_i MEC\ gamma\ fraction = \sum_i (CG_i/MEC_i)$$

$$RDF_{TOTAL} = \sum_i MEC\ total\ fraction = \sum_i (C_i/MEC_i)$$

RDF_{γ} is used to calculate the liquid radwaste effluent radiation monitor setpoint. This monitor is a gamma detector and has little or no response to non gamma emitters. Use of RDF_{γ} rather than RDF_{TOTAL}, to determine the monitor setpoint prevents the condition where a tank with gamma concentrations near their LLD cannot be discharged due to spurious alarms received because the setpoint is close to the monitor background. RDF_{TOTAL} is used to determine the minimum dilution factor required to discharge the tank contents based on all activity, both gamma and non gamma, in the tank. This ensures that the concentrations of all radioactive materials released in liquid effluents will meet DLCO 3.1.1. Non gamma emitting nuclide activity, except tritium was initially estimated based on the expected ratios to quantified nuclides as listed in the FSAR Table 11.2.5. Fe-55, Sr-89 and Sr-90 are 2.5, 0.25 and 0.02 times, respectively, the concentration of Co-60. Currently, non gamma activity except tritium is estimated using the results from the latest analysis of composite samples.

Tritium concentration is assumed to equal the latest concentration detected in the monthly tritium analysis of liquid radioactive waste tanks discharged.

Nominal flow rates of the Liquid Radioactive Waste System Tanks discharged is < 165 gpm while dilution flow from the Service Water Pumps, and Cooling Tower Blowdown cumulatively is typically over 10,200 gpm. Because of the large amount of dilution the alarm setpoint could be substantially greater than that which would correspond to the concentration actually in the tank. Potentially a discharge could continue even if the distribution of nuclides in the tank were substantially different from the grab sample obtained prior to discharge which was used to establish the detector alarm point. To avoid this possibility of "Non representative Sampling" resulting in erroneous assumptions about the discharge of a tank, the tank is recirculated for a minimum of 2.5 tank volumes prior to sampling.

This monitor's setpoint takes into account the dilution of Radwaste Effluents provided by the Service Water and Cooling Tower Blowdown flows. Detector response for the nuclides to be discharged (cpm) is multiplied by the Actual Dilution Factor (dilution flow/waste stream flow) and divided by the Required Dilution Factor (total fraction of the effluent concentration in the waste stream). A safety factor is used to ensure that the limit is never exceeded. Service Water and Cooling Tower Blowdown are normally non-radioactive. If they are found to be contaminated prior to a Liquid Radwaste discharge then an alternative equation is used to take into account the contamination. If they become contaminated during a Radwaste discharge, then the discharge will be immediately terminated and the situation fully assessed.

Normal Radwaste Effluent Alarm Setpoint Calculation:

Alarm Setpoint $\leq$ 0.8 * TDF/PEF * TGC/CF * 1/RDFγ + Background.

Where:

Alarm Setpoint	=	The Radiation Detector Alarm Setpoint, cpm
0.8	=	Safety Factor, unitless
TDF	=	Nonradioactive dilution flow rate, gpm. Service Water Flow (ranges from 30,000 to 58,000 gpm) + Blowdown flow (typically 10,200 gpm) - Tempering
C_i	=	Concentration of isotope i in Radwaste tank prior to dilution, μCi/ml (gamma + non-gamma emitters)
CF_i	=	Detector response for isotope i, net μCi/ml/cpm See Table D 2-1 for a list of nominal values
PEF	=	The permissible Radwaste Effluent Flow rate, gpm, 165 gpm is the maximum value used in this equation
MEC_i	=	Maximum Effluent Concentration, ten times the limiting effluent concentration for isotope i from 10 CFR 20 Appendix B, Table 2, Column 2, μCi/ml
Background	=	Detector response when sample chamber is filled with nonradioactive water, cpm
CF	=	Monitor Conversion Factor, μCi/ml/cpm, determined at each calibration of the effluent monitor
CG_i	=	Concentration of gamma emitting nuclide in Radwaste tank prior to dilution, μCi/ml
$TGC = \sum CG_i$	=	Summation of all gamma emitting nuclides (which monitor will respond to)
$\sum (CG_i/CF_i)$	=	The total detector response when exposed to the concentration of nuclides in the Radwaste tank, cpm
$RDF\gamma = \sum_i (CG_i/MEC_i)$	=	The total fraction of ten times the 10 CFR 20, Appendix B, Table 2, Column 2 limit that is in the Radwaste tank, unitless. This is also known as the Required Dilution Factor Gamma (RDFγ).
TGC/CF	=	An approximation to $\sum_i (CG_i/CF_i)$ using CF determined at each calibration of the effluent monitor
TDF/PEF	=	An approximation to (TDF + PEF)/PEF, the Actual Dilution Factor in effect during a discharge.
$RDF_{Total} = \Sigma_i (C_i/MEC_i)$	=	The total fraction of ten times the 10 CFR 20, Appendix B, Table 2, Column 2 limit that is in the Radwaste tank, unitless. This is also known as the Required Dilution Factor-Total and includes both the gamma and non-gamma emitters.
Tempering	=	A diversion of some fraction of discharge flow to the intake canal for the purpose of temperature control, gpm.

Permissible effluent flow, PEF, shall be calculated to determine that the maximum effluent concentration will not be exceeded in the discharge canal.

$$PEF = \frac{TDF}{(RDF_{Total})\ 1.5}$$

If Actual Dilution Factor is set equal to the Required Dilution Factor, then the alarm points required by the above equations correspond to a concentration of 80% of the Radwaste Tank concentration. No discharge could occur, since the monitor would be in alarm as soon as the discharge commenced. To avoid this situation, maximum allowable radwaste discharge flow is calculated using a multiple (usually 1.5 to 2) of the Required Dilution Factor, resulting in discharge canal concentration of 2/3 to 1/2 of the maximum effluent concentration prior to alarm and termination of release. If no gamma emitters are detected in the Radwaste Tank samples, then the radiation monitor setpoint will be based on assuming gamma activity at the LLD of the most limiting nuclide from recent discharges. In performing the alarm calculation, the smaller of 165 gpm (the maximum possible flow) and PEF will be used.

To ensure the alarm setpoint is not exceeded, an alert alarm is provided. The alert alarm will be set in accordance with the equation above using a safety factor of 0.5 (or lower) instead of 0.8.

1.1.2.2 Contaminated Dilution Water Radwaste Effluent Monitor Alarm Setpoint Calculation:

The allowable discharge flow rate for a Radwaste tank, when one of the normal dilution streams (Service Water A, Service Water B, or Cooling Tower Blowdown) is contaminated, will be calculated by an iterative process. Using Radwaste tank concentrations with a total liquid effluent flow rate, the resulting fraction of the maximum effluent concentration in the discharge canal will be calculated.

$$FMEC = \sum_s [F_s / \sum_s (F_s) \sum_i (C_{is} \div MEC_i)]$$

Then the permissible radwaste effluent flow rate is given by:

$$PEF = \frac{\text{Total Radwaste Effluent Flow}}{FMEC}$$

The corresponding Alarm Setpoint will then be calculated using the following equation, with PEF limited as above.

$$\text{Alarm Setpoint} \leq 0.8 \quad \frac{TGC/CF}{FMEC} + \text{Background}$$

Where:

Alarm Setpoint	=	The Radiation Detector Alarm Setpoint, cpm
0.8	=	Safety Factor, Unitless
F_s	=	An Effluent flow rate for stream s, gpm
C_i	=	Concentration of isotope i in Radwaste tank prior to dilution, µCi/ml
C_{is}	=	Concentration of isotope i in Effluent stream s including the Radwaste Effluent tank undiluted, µCi/ml
CF	=	Average detector response for all isotopes in the waste stream, net µCi/ml/cpm
MEC_i	=	Maximum Effluent Concentration, ten times the effluent concentration limit for isotope i from 10CFR20 Appendix B, Table 2, Column 2, µCi/ml
PEF	=	The permissible Radwaste Effluent Flow rate, gpm
Background	=	Detector response when sample chamber is filled with nonradioactive water, cpm
TGC/CF = $\sum_i (CG_i/CF)$	=	The total detector response when exposed to the concentration of nuclides in the Radwaste tank, cpm
$\sum_s [F_s C_{is}]$	=	The total activity of nuclide i in all Effluent streams, µCi-gpm/ml
$\sum_s [F_s]$	=	The total Liquid Effluent Flow rate, gpm (Service Water & CT Blowdown & Radwaste)

1.1.2.3 Service Water and Cooling Tower Blowdown Effluent Alarm Setpoint

These monitor setpoints do not take any credit for dilution of each respective effluent stream. Detector response for the distribution of nuclides potentially discharged is divided by the total MEC fraction of the radionuclides potentially in the respective stream. A safety factor is used to ensure that the limit is never exceeded.

Service Water and Cooling Tower Blowdown are normally non-radioactive. If they are found to be contaminated by statistically significant increase in detector response then grab samples will be obtained and analysis meeting the LLD requirements of Table D 3.1.1-1 completed so that an estimate of offsite dose can be made and the situation fully assessed.

Service Water A and B and the Cooling Tower Blowdown are pumped to the discharge tunnel which in turn flows directly to Lake Ontario. Normal flow rates for each Service Water Pump is 10,000 gpm while that for the Cooling Tower Blowdown may be as much as 10,200 gpm. Credit is not taken for any dilution of these individual effluent streams.

The radiation detector is a sodium iodide crystal. It is a scintillation device. The crystal is sensitive to gamma and beta radiation. However, because of the metal walls in its sample chamber and the absorption characteristics of water, the monitor is not particularly sensitive to beta radiation.

Detector response $\sum_i (C_i/CF_i)$ has been evaluated by placing a diluted sample of Reactor Coolant (after a two hour decay) in a representative monitor and noting its gross count rate. Reactor Coolant was chosen because it represents the most likely contaminant of Station Waters.

A two hour decay was chosen by judgement of the staff of Nine Mile Point. Reactor Coolant with no decay contains a considerable amount of very energetic nuclides which would bias the detector response term high. However assuming a longer than 2 hour decay is not realistic as the most likely release mechanism is a leak through the Residual Heat Removal Heat Exchangers which would contain Reactor Coolant during shutdowns.

Service Water and Cooling Tower Blowdown Alarm Setpoint Equation:

Alarm Setpoint $< 0.8\ (1/CF)\ \sum_i C_i / [\sum_i (C_i/MEC_i)] +$ Background.

Where:

Alarm Setpoint	=	The Radiation Detector Alarm Setpoint, cpm
0.8	=	Safety Factor, unitless
C_i	=	Concentration of isotope i in potential contaminated stream, µCi/ml
CF_i	=	Detector response for isotope i, net µCi/ml/cpm See Table 2-1 for a list of nominal values
MEC_i	=	Maximum Effluent Concentration, ten times the effluent concentration limit for isotope i from 10 CFR 20 Appendix B, Table 2, Column 2, µCi/ml
Background	=	Detector response when sample chamber is filled with nonradioactive water, cpm
$\sum_i (C_i/CF_i)$	=	The total detector response when exposed to the concentration of nuclides in the potential contaminant, cpm
$\sum_i (C_i/MEC_i)$	=	The total fraction of ten times the 10CFR20, Appendix B, Table 2, Column 2 limit that is in the potential contaminated stream, unitless.
$(1/CF)\sum_i C_i$	=	An approximation to $\sum_i (C_i/CF_i)$, determined at each calibration of the effluent monitor
CF	=	Monitor Conversion Factor, µCi/ml/cpm

1.2 Liquid Effluent Concentration Calculation

This calculation documents compliance with Section D 3.1.1 of Part I:

As required by Technical Specification 5.5.4, "Radioactive Effluent Controls Program," the concentration of radioactive material released in liquid effluents to UNRESTRICTED AREAS (see Figure D 1.0-1) shall be limited to ten times the concentrations specified in 10 CFR 20, Appendix B, Table 2, Column 2, for radionuclides other than dissolved or entrained noble gases. For dissolved or entrained noble gases, the concentration shall be limited to 2E-04 microcurie/ml total activity.

The concentration of radioactivity from Liquid Radwaste, Service Water A and B and the Cooling Tower Blowdown are included in the calculation. The calculation is performed for a specific period of time. No credit is taken for averaging. The limiting concentration is calculated as follows:

$$FMEC = \sum_s [F_s / \sum_s (F_s) \sum_i (C_{is} \div MEC_i)]$$

Where:	FMEC	=	The Fraction of Maximum Effluent Concentration, the ratio at the point of discharge of the actual concentration to ten times the limiting concentration of 10 CFR 20, Appendix B, Table 2, Column 2, for radionuclides other than dissolved or entrained noble gases, unitless
	C_{is}	=	The concentration of nuclide i in a particular effluent stream s, µCi/ml
	F_s	=	The flow rate of a particular effluent stream s, gpm
	MEC_i	=	Maximum Effluent Concentration, ten times the limiting Effluent Concentration of a specific nuclide i from 10CFR20, Appendix B, Table 2, Column 2 (for noble gases, the concentration shall be limited to 2E-4 microcurie/ml), µCi/ml
	$\sum_i (C_{is}/MEC_i)$	=	The Maximum Effluent Concentration fraction of stream s prior to dilution by other streams
	$\sum_s (F_s)$	=	The total flow rate of all effluent streams s, gpm

A value of less than one for the MEC fraction is required for compliance.

1.3 Liquid Effluent Dose Calculation Methodology

The dose or dose commitment to a MEMBER OF THE PUBLIC from radioactive materials in liquid effluents released, from each unit, to UNRESTRICTED AREAS (see Figure D 1.0-1) shall be limited:

a. During any calendar quarter to less than or equal to 1.5 mrem to the whole body and to less than or equal to 5 mrem to any organ, and

b. During any calendar year to less than or equal to 3 mrem to the whole body and to less than or equal to 10 mrem to any organ.

Doses due to Liquid Effluents are calculated monthly for the fish and drinking water ingestion pathways and the external sediment exposure pathways from all detected nuclides in liquid effluents released to the unrestricted areas using the following expression from NUREG 0133, Section 4.3.

$$D_t = \sum_i [A_{it} \sum_L (\Delta T_L C_{iL} F_L)]$$

Where:

D_t = The cumulative dose commitment to the total body or any organ, t from the liquid effluents for the total time period $\sum_L (\Delta T_L)$, mrem

ΔT_L = The length of the L th time period over which C_{iL} and F_L are averaged for all liquid releases, hours

C_{iL} = The average concentration of radionuclide, i, in undiluted liquid effluents during time period ΔT_L from any liquid release, µCi/ml

A_{it} = The site related ingestion dose commitment factor for the maximum individual to the total body or any or gan t for each identified principal gamma or beta emitter, mrem/hr per µCi/ml. Table D 2-2.

F_L = The near field average dilution factor for C_{iL} during any liquid effluent release. Defined as the ratio of the maximum undiluted liquid waste flow during release to the product of the average flow from the site discharge structure to unrestricted receiving waters times 5.9. (5.9 is the site specific applicable factor for the mixing effect of the discharge structure.) See the Nine Mile Point Unit 2 Environmental Report - Operating License Stage, Table 5.4-2 footnote 1.

These factors can be related to batch release parameters as follows:

F_L = PEF / (TDF x 5.9) (Terms defined in Section 1.1.2.1 and above)

$\Delta T_L F_L$ = [PEF (gpm) x ΔT_L (min) x 1.67E-2 (hr/min)] / [TDF (gpm) x 5.9]

= [TV x 2.83E-3 (hours)] / TDF

For each batch, PEF (gpm) x ΔT_L (min) = Tank Volume. For each batch, a dose calculation common constant ($\Delta T_L F_L$) is calculated to be used with the concentration of each nuclide and dose factor, A_i, to calculate the dose to a receptor. Normally, the highest dose factor for any age group (adult, teen, child, infant) will be used for calculation, but specific age-group calculations to demonstrate compliance may be performed if required.

1.4 Liquid Effluent Sampling Representativeness

There are four tanks in the radwaste system designed to be discharged to the discharge canal. These tanks are labeled 4A, 4B, 5A, and 5B.

Liquid Radwaste Tank 5A and 5B at Nine Mile Point Unit 2 contain a sparger spray ring which assists the mixing of the tank contents while it is being recirculated prior to

sampling. This sparger effectively mixes the tank four times faster than simple recirculation.

Liquid Radwaste Tank 4A and 4B contain a mixing ring but no sparger. No credit is taken for the mixing effects of the ring. Normal recirculation flow is 150 gpm for tank 5A and 5B, 110 gpm for tank 4A and 4B while each tank contains up to 25,000 gallons although the entire contents are not discharged. To assure that the tanks are adequately mixed prior to sampling, it is a plant requirement that the tank be recirculated for the time required to pass 2.5 times the volume of the tank:

$$\text{Recirculation Time} = 2.5T/RM$$

Where:

Recirculation Time=		Is the minimum time to recirculate the Tank, min
2.5	=	Is the plant requirement, unitless
T	=	Is the tank volume, gal
R	=	Is the recirculation flow rate, gpm.
M	=	Is the factor that takes into account the mixing of the sparger, unitless, four for tank 5A and B, one for tank 4A and B.

Additionally, the Alert Alarm setpoint of the Liquid Radwaste Effluent monitor is set at approximately 60% of the High alarm setpoint. This alarm will give indication of incomplete mixing with adequate margin before exceeding ten times the effluent concentration.

Service Water A and B and the Cooling Tower Blowdown are sampled from the radiation monitor on each respective stream. These monitors continuously withdraw a sample and pump it back to the effluent stream. The length of tubing between the continuously flowing sample and the sample spigot contains less than 200 ml which is adequately purged by requiring a purge of at least 1 liter when grabbing a sample.

1.5 Liquid Radwaste System FUNCTIONALITY

The Liquid Radwaste Treatment System shall be FUNCTIONAL and used when projected doses due to liquid radwaste effluents would exceed 0.06 mrem to the whole body or 0.2 mrem to any organ in a 31-day period. Cumulative doses will be determined at least once per 31 days (as indicated in Section 1.3) and doses will also be projected if the radwaste treatment systems are not being fully utilized.

The system collection tanks are processed as follows:

1) Low Conductivity (Waste Collector): Radwaste Filter and Radwaste Demineralizer or the Thermex System.

2) High Conductivity (Floor Drains): Regenerant Evaporator or the Thermex System.

3) Regenerant Waste: If resin regeneration is used at NMP-2, the waste will be processed through the regenerant evaporator or Thermex System.

The dose projection indicated above will be performed in accordance with the methodology of Section 1.3.

2.0 GASEOUS EFFLUENTS

The gaseous effluent release points are the stack and the combined Radwaste/Reactor Building vent. The stack effluent point includes Turbine Building ventilation, main condenser offgas (after charcoal bed holdup), and Standby Gas Treatment System exhaust. NUREG 0133 and Regulatory Guide 1.109, Rev. 1 were followed in the development of this section.

2.1 Gaseous Effluent Monitor Alarm Setpoints

2.1.1 Basis

The dose rate from radioactive materials released in gaseous effluents from the site to areas at or beyond the SITE BOUNDARY (see Figure D 1.0-1) shall be limited to the following in accordance with Technical Specification 5.5.4.g:

a. For noble gases: Less than or equal to 500 mrem/yr to the whole body and less than or equal to 3000 mrem/yr to the skin, and

b. For iodine-131, for iodine-133, for tritium, and for all radionuclides with half-lives greater than 8 days: Less than or equal to 1500 mrem/yr to any organ.

The radioactivity rate of noble gases measured at the recombiner effluent shall be less than or equal to 350,000 microcuries/second after decay of 30 minutes during offgas system operation in accordance with Technical Specification 3.7.4.

2.1.2 Setpoint Determination Methodology Discussion

Nine Mile Point Unit 1 and the James A FitzPatrick nuclear plants occupy the same site as Nine Mile Point Unit 2. Because of the independence of these plants' safety systems, control rooms and operating staffs it is assumed that simultaneous accidents are not likely to occur at the different units. However, there are two release points at Unit 2. It is assumed that if an accident were to occur at Unit 2 that both release points could be involved.

The alarm setpoint for Gaseous Effluent Noble Gas Monitors are based on a dose rate limit of 500 mRem/yr to the Whole Body. Since there are two release points at Unit 2, the dose rate limit of 500 mRem/yr is divided equally for each release point, but may be apportioned otherwise, if required. These monitors are sensitive to only noble gases. Because of this it is considered impractical to base their alarm setpoints on organ dose rates due to iodines or particulates. Additionally skin dose rate is never significantly greater than the whole body dose rate. Thus the factor R which is the basis for the alarm setpoint calculation is nominally taken as equal to 250 mRem/yr. If there are significant releases from any gaseous release point on the site (>25 mRem/yr) for an extended period of time then the setpoint will be recalculated with an appropriately smaller value for R.

The high alarm setpoint for the Offgas Noble Gas monitor is based on a limit of 350,000 uCi/sec after 30-minute delay. This is the release rate for which a FSAR accident

analysis was completed. At this rate the Offgas System charcoal beds will not contain enough activity so that their failure and subsequent release of activity will present a significant offsite dose assuming accident meteorology.

Initially, in accordance with Part I, Section D 3.3.2, the Germanium multichannel analysis systems of the stack and vent will be calibrated with gas standards (traceable to NIST) in accordance with DSR 3.3.2.9. Subsequent calibrations may be performed with gas standards, or with related solid sources. The quarterly Channel Functional Test will include FUNCTIONALITY of the 30cc chamber and the dilution stages to confirm monitor high range capability. (Appendix D, Gaseous Effluent Monitoring System).

2.1.2.1 Stack Noble Gas Detector Alarm Setpoint Equation:

The stack at Nine Mile Point Unit 2 receives the Offgas after charcoal bed delay, Turbine Building Ventilation and the Standby Gas Treatment system exhaust. The Standby Gas Treatment System Exhausts the primary containment during normal shutdowns and maintains a negative pressure on the Reactor Building to maintain secondary containment integrity. The Standby Gas Treatment will isolate on high radiation detected (by the SGTS monitor) during primary containment purges.

The stack noble gas detector is made of germanium. It is sensitive to only gamma radiation. However, because it is a computer based multichannel analysis system it is able to accurately quantify the activity released in terms of uCi of specific nuclides. Only pure alpha and beta emitters are not detectable, of which there are no common noble gases. A distribution of Noble Gases corresponding to offgas is chosen for the nominal alarm setpoint calculation. Offgas is chosen because it represents the most significant contaminant of gaseous activity in the plant. The release rate Q_i, corresponds to offgas concentration expected with the plant design limit for fuel failure. The alarm setpoint may be recalculated if a significant release is encountered. In that case the actual distribution of noble gases will be used in the calculation.

The following calculation will be used for the initial Alarm Setpoint.

$$\text{Alarm Setpoint, } \mu\text{Ci/sec} \leq \frac{0.8R \quad \sum_i (Q_i)}{\sum_i (Q_i V_i)}$$

0.8	=	Safety Factor, unitless
R	=	Allocation Factor. Normally, 250 mrem/yr; the value must be 500 mrem/yr or less depending upon the dose rate from other release points within the site such that the total dose rate corresponds to < 500 mrem/yr
Q_i	=	The release rate of nuclide i, µCi/sec
V_i	=	The constant for each identified noble gas nuclide accounting for the whole body dose from the elevated finite plume listed on Table D 3-2, mrem/yr per µCi/sec
$\sum_i (Q_i)$	=	The total release rate of noble gas nuclides in the stack effluent, µCi/sec

$\sum_i (Q_i V_i)$ = The total of the product of each isotope release rate times its respective whole body plume constant, mrem/yr

The alert alarm is normally set at less than 10% of the high alarm.

2.1.2.2 Vent Noble Gas Detector Alarm Setpoint Equation:

The vent contains the Reactor Building ventilation above and below the refuel floor and the Radwaste Building ventilation effluents. The Reactor Building Ventilation will isolate when radiation monitors detect high levels of radiation (these are separate monitors, not otherwise discussed in the ODCM). Nominal flow rate for the vent is 2.37E5 CFM.

This detector is made of germanium. It is sensitive to only gamma radiation. However, because it is a computer based multichannel analysis system it is able to accurately quantify the activity released in terms of μCi of specific nuclides. Only pure alpha and beta emitters are not detectable, of which there are no common noble gases. A distribution of Noble Gases corresponding to that expected with the design limit for fuel failure offgas is chosen for the nominal alarm setpoint calculation. Offgas is chosen because it represents the most significant contaminant of gaseous activity in the plant. The alarm setpoint may be recalculated if a significant release is encountered. In that case the actual distribution of noble gases will be used in the calculation.

$$\text{Alarm Setpoint, uCi/sec} < \frac{0.8R \sum_i (Q_i)}{(X/Q)_v \sum_i (Q_i K_i)}$$

Where:

0.8	=	Safety Factor, unitless
R	=	Allocation Factor. Normally, 250 mrem/yr; the value must be 500 mrem/yr or less depending upon the dose rate from other release points within the site such that the total rate corresponds to < 500 mrem/yr
Q_i	=	The release rate of nuclide i, μCi/sec
$(X/Q)_v$	=	The highest annual average atmospheric dispersion coefficient at the site boundary as listed in the Final Environmental Statement, NUREG 1085, Table D-2, 2.0E-6 sec/m^3
K_i	=	The constant for each identified noble gas nuclide accounting for the whole body dose from the semi-infinite cloud, listed on Table D 3-3, mrem/yr per μCi/m^3

$\sum_i (Q_i)$	=	The total release rate of noble gas nuclides in the vent effluent, uCi/sec
$\sum_i (Q_i K_i)$	=	The total of the product of the each isotope release rate times its respective whole body immersion constant, mrem/yr per sec/m^3

The alert alarm is normally set at less than 10% of the high alarm.

2.1.2.3 Offgas Pretreatment Noble Gas Detector Alarm Setpoint Equation:

The Offgas system has a radiation detector downstream of the recombiners and before the charcoal decay beds. The offgas, after decay, is exhausted to the main stack. The system will automatically isolate if its pretreatment radiation monitor detects levels of radiation above the high alarm setpoint.

The Radiation Detector contains a plastic scintillator disc. It is a beta scintillation detector. Calculation H21C-070, Offgas Radiation Monitor (2OFG-RE13A and 13B) Alert and Alarm Setpoint Determination, assumes a distribution of offgas corresponding to that expected with the design limit for fuel failure to establish the setpoint. Calculation Table 5 tabulates Alarm/Trip setpoints as a function of Offgas flow due to decay from the Recombiner discharge to the monitor/sampling location. The monitor design response values are confirmed during periodic calibration using a Transfer Standard source traceable to the primary calibration performed by the vendor.

Particulates and Iodines are not included in this calculation because this is a noble gas monitor.

To provide an alarm in the event of failure of the offgas system flow instrumentation, the low flow alarm setpoint will be set at or above 10 scfm, (well below normal system flow) and the high flow alarm setpoint will be set at or below 110 scfm, which is well above expected steady-state flow rates with a tight condenser.

To provide an alarm for changing conditions, the alert alarm will normally be set at less than or equal to 1.5 times nominal full power background (average, +3 standard deviations) to ensure that the Specific Activity Action required by ITS SR 3.7.4.1, are implemented in a timely fashion.

$$\text{Alarm Setpoint, cpm} \leq 0.8 \quad \frac{(ACT)(2.12\ E\text{-}03)\ \sum_i (C_i/CF_i)}{F\ \sum_i (C_i)} + \text{Background}$$

Where:

Alarm Setpoint	=	The alarm setpoint for the offgas pretreatment Noble Gas Detector, cpm
0.8	=	Safety Factor, unitless

ACT	=	The Technical Specification Limit for Offgas Pretreatment, µCi/sec, equivalent to 350,000 µCi/sec after 30 minutes decay.
2.12E-03	=	Unit conversion Factor, 60 sec/min / 28317 cc/CF
C_i	=	The concentration of nuclide, i, in the Offgas, µCi/cc
CF_i	=	The Detector response to nuclide i, µCi/cc/cpm; See Table D 3-1 for a list of nominal values
F	=	The Offgas System Flow rate, CFM
Background	=	The detector response to something other than noble gases that will be released after 30 minutes decay. Includes purge background, response to activation gases, and response to fission gases with half-life less than 4 minutes, cpm
$\sum_i (C_i/CF_i)$	=	The summation of the nuclide concentration divided by the corresponding detector response, net cpm
$\sum_i (C_i)$	=	The summation of the concentration of nuclides in offgas, µCi/cc

NOTE: Calculation H21C-070 indicates Activity at the Monitor will range from 9.64 E+05 µCi/sec to 1.22 E+06 µCi/sec. A conservative Offgas Activity Release Rate of 900,000 µCi/sec applies to this location at all flow rates.

2.2 Gaseous Effluents Dose Rate Calculation

Dose rates will be calculated monthly at a minimum to demonstrate that the release of noble gases, tritium, iodines, and particulates with half lives greater than 8 days are within the dose rate limits specified in 10CFR20. These limits are as follows:

The dose rate from radioactive materials released in gaseous effluents from the site to areas at or beyond the SITE BOUNDARY (see Figure D 1.0-1) shall be limited per Technical Specification 5.5.4.g to the following:

a. For noble gases: Less than or equal to 500 mrem/yr to the whole body and less than or equal to 3000 mrem/yr to the skin, and

b. For iodine-131, iodine-133, for tritium, and for all radionuclides in particulate form with half-lives greater than 8 days: Less than or equal to 1500 mrem/yr to any organ:

2.2.1 X/Q and W_v - Dispersion Parameters for Dose Rate, Table D 3-23

The dispersion parameters for the whole body and skin dose rate calculation correspond to the highest annual average dispersion parameters at or beyond the unrestricted area boundary. This is at the east site boundary. These values were obtained from the Nine Mile Point Unit 2 Final Environmental Statement, NUREG 1085 Table D-2 for the vent and stack. These were calculated using the methodology of Regulatory Guide 1.111, Rev. 1. The stack was modeled as an elevated release point because its height is more than 2.5 times any adjacent building height. The vent was modeled as a ground level release because even though it is higher than any adjacent building it is not more than 2.5 times the height.

The NRC Final Environmental Statement values for the site boundary X/Q and D/Q terms were selected for use in calculating Effluent Monitor Alarm Points and compliance with Site Boundary Dose Rate specifications because they are conservative when compared with the corresponding Nine Mile Point Environmental Report values. In addition, the stack "intermittent release" X/Q was selected in lieu of the "continuous" value, since it is slightly larger, and also would allow not making a distinction between long term and short term releases.

The dispersion parameters for the organ dose calculations were obtained from the Environmental Report, Figures 7B-4 (stack) and 7B-8 (vent) by locating values corresponding to currently existing (1985) pathways. It should be noted that the most conservative pathways do not all exist at the same location. It is conservative to assume that a single individual would actually be at each of the receptor locations.

2.2.2 Whole Body Dose Rate Due to Noble Gases

The ground level gamma radiation dose from a noble gas stack release (elevated), referred to as plume shine, is calculated using the dose factors from Appendix B of this document. The ground level gamma radiation dose from a noble gas vent release accounts for the exposure from immersion in the semi-infinite cloud. The dispersion of the cloud from the point of release to the receptor at the east site boundary is factored into the plume shine dose factors for stack releases and through the use of X/Q in the equation for the immersion ground level dose rates for vent releases. The release rate is averaged over the period of concern. The factors are discussed in Appendix B.

Whole body dose rate $(DR)_\gamma$ due to noble gases:

$$(DR)_\gamma = 3.17E-08 \sum_i [V_i Q_{is} + K_i (X/Q)_v Q_{iv}]$$

Where:

DR_γ	=	Whole body dose rate (mrem/sec)
V_i	=	The constant accounting for the gamma whole body dose rate from the finite plume from the elevated stack releases for each identified noble gas nuclide, i. Listed on Table D 3-2, mrem/yr per µCi/sec
K_i	=	The constant accounting for the gamma whole body dose rate from immersion in the semi-infinite cloud for each identified noble gas nuclide, i. Listed in Table D 3-3, mrem/yr per uCi/m^3 (From Reg. Guide 1.109)
X/Q_v X/Q_s	=	The relative plume concentration at or beyond the land sector site boundary. Average meteorological data is used. Elevated X/Q values are used for the stack releases (s=stack); ground X/Q values are used for the vent releases (v=vent). Listed on Table D 3-23 (sec/m^3)
Q_{is}, Q_{iv}	=	The release rate of each noble gas nuclide i, from the stack (s) or vent

(v). Averaged over the time period of concern. (μCi/sec)

3.17E-08 = Conversion Factor; the inverse of the number of seconds in one year. (yr/sec)

2.2.3 Skin Dose Rate Due to Noble Gases

There are two types of radiation from noble gas releases that contribute to the skin dose rate: beta and gamma.

For stack releases this calculation takes into account the dose from beta radiation in a semi infinite cloud by using an immersion dose factor. Additionally, the dispersion of the released activity from the stack to the receptor is taken into account by use of the factor (X/Q). The gamma radiation dose from the elevated stack release is taken into account by the dose factors in Appendix B.

For vent releases the calculations also take into account the dose from the beta (β) and gamma (γ) radiation of the semi infinite cloud by using an immersion dose factor. Dispersion is taken into account by use of the factor (X/Q).

The release rate is averaged over the period of concern.

Skin dose rate $(DR)_{\gamma+\beta}$ due to noble gases:

$$(DR)_{\gamma+\beta} = 3.17E-8 \sum_i [(L_i (X/Q)_s + 1.11B_i) Q_{is} + (L_i + 1.11M_i)(X/Q)_v Q_{iv}]$$

Where:

$(DR)_{\gamma+\beta}$ = Skin dose rate (mrem/sec)

L_i = The constant to account for the gamma and beta skin dose rates for each noble gas nuclide, i, from immersion in the semi-infinite cloud, mrem/yr per μCi/m^3, listed on Table D 3-3 (from R.G. 1.109)

M_i = The constant to account for the air gamma dose rate for each noble gas nuclide, i, from immersion in the semi-infinite cloud, mrad/yr per μCi/m^3, listed on Table D 3-3 (from R.G. 1.109)

1.11 = Unit conversion constant, mrem/mrad

.7 = Structural shielding factor, unitless

B_i = The constant accounting for the air gamma dose rate from exposure to the overhead plume of elevated releases of each identified noble gas nuclide, i. Listed on Table D 3-2, mrad/yr per μCi/sec.

$(X/Q)_s$ $(X/Q)_v$	=	The relative plume concentration at or beyond the land sector site boundary. Average meteorological data is used. Elevated X/Q values are used for the stack releases (s=stack); ground X/Q values are used for the vent releases (v=vent). (sec/m^3)
3.17E-8	=	Conversion Factor; the inverse of the number of seconds in a year; (yr/sec)
Q_{iv},Q_{is}	=	The release rate of each noble gas nuclide i, from the stack(s) or vent (v) averaged over the time period of concern, µCi/sec.

2.2.4 Organ Dose Rate Due to I-131, I-133, Tritium, and Particulates with Half-lives greater than 8 days.

The organ dose rate is calculated using the dose factors (R_i) from Appendix C. The factor R_i takes into account the dose rate received from the ground plane, inhalation and ingestion pathways. W_s and W_v take into account the atmospheric dispersion from the release point to the location of the most conservative receptor for each of the respective pathways. The release rate is averaged over the period of concern.

Organ dose rates $(DR)_{at}$ due to iodine-131, iodine-133, tritium and all radionuclides in particulate form with half-lives greater than 8 days:

$$(DR)_{at} = 3.17E\text{-}8 \sum_j [\sum_i R_{ijat} [W_s Q_{is} + W_v Q_{iv}]]$$

Where:

$(DR)_{at}$	=	Organ dose rate (mrem/sec)
R_{ijat}	=	The factor that takes into account the dose from nuclide i through pathway j to an age group a, and individual organ t. Units for inhalation pathway, mrem/yr per µCi/m^3. Units for ground and ingestion pathways, m^2-mrem/yr per uCi/sec. (See Tables D 3-4 through D 3-22).
W_s, W_v	=	Dispersion parameter either X/Q (sec/m^3) or D/Q (1/m^2) depending on pathway and receptor location. Average meteorological data is used (Table D 3-23). Elevated W_s values are used for stack releases (s=stack); ground W_v values are used for vent releases (v=vent).
Q_{is}, Q_{iv}	=	The release rates for nuclide i, from the stack (s) and vent (v) respectively, µCi/sec.

When the release rate exceeds 0.75 uCi/sec from the stack or vent, the dose rate assessment shall, also, include JAF and NMP1 dose contributions. The use of the 0.75 µCi/sec release rate threshold is conservative because it is based on the dose conversion

factor (R_i) for the Sr-90 child bone which is significantly higher than the dose factors for the other isotopes present in the stack or vent release.

2.3 Gaseous Effluent Dose Calculation Methodology

Doses will be calculated monthly at a minimum to demonstrate that doses resulting from the release of noble gases, tritium, iodines, and particulates with half lives greater than 8 days are within the limits specified in 10 CFR 50. These limits are as follows:

The air dose from noble gases released in gaseous effluents, from each unit, to areas at or beyond the SITE BOUNDARY (see Figure D 1.0-1) shall be limited to the following:

a. During any calendar quarter: Less than or equal to 5 mrad for gamma radiation and less than or equal to 10 mrad for beta radiation, and

b. During any calendar year: Less than or equal to 10 mrad for gamma radiation and less than or equal to 20 mrad for beta radiation.

The dose to a MEMBER OF THE PUBLIC from iodine-131, iodine-133, tritium, and all radioactive material in particulate form with half-lives greater than 8 days in gaseous effluents released, from each unit, to areas at or beyond the SITE BOUNDARY (see Figure D 1.0-1) shall be limited to the following:

a. During any calendar quarter: Less than or equal to 7.5 mrem to any organ and,

b. During any calendar year: Less than or equal to 15 mrem to any organ.

The VENTILATION EXHAUST TREATMENT SYSTEM shall be FUNCTIONAL and appropriate portions of this system shall be used to reduce releases of radioactivity when the projected doses in 31 days from iodine and particulate releases, from each unit, to areas at or beyond the SITE BOUNDARY (see Figure D 1.0-1) would exceed 0.3 mrem to any organ of a MEMBER OF THE PUBLIC.

2.3.1 W_v and W_s - Dispersion Parameters for Dose, Table D 3-23

The dispersion parameters for dose calculations were obtained chiefly from the Nine Mile Point Unit 2 Environmental Report Appendix 7B. These were calculated using the methodology of Regulatory Guide 1.111 and NUREG 0324. The stack was modeled as an elevated release point because height is more than 2.5 times the height of any adjacent building. The vent was modeled as a combined elevated/ground level release because the vent's height is not more than 2.5 times the height of any adjacent building. Average meteorology over the appropriate time period was used. Dispersion parameters not available from the ER were obtained from C.T. Main Data report dated November, 1985, or the FES.

2.3.2 Gamma Air Dose Due to Noble Gases

Gamma air dose from the stack or vent noble gas releases is calculated monthly. The gamma air dose equation is similar to the gamma dose rate equation except the receptor is air instead of the whole body or skin of whole body. Therefore, the stack noble gas releases use the finite plume air dose factors, and the vent noble gas releases use semi-infinite cloud immersion dose factors. The factor X/Q takes into account the dispersion of vent releases to the most conservative location. The release activity is totaled over the period of concern. The finite plume factor is discussed in Appendix B.

Gamma air dose due to noble gases:

$$D_\gamma = 3.17E\text{-}8 \sum_i [M_i (X/Q)_v Q_{iv} + B_i Q_{is}] \times t$$

D_γ = The gamma air dose for the period of concern, mrad

t = The duration of the dose period of concern, sec

Where all other parameters have been previously defined.

2.3.3 Beta Air Dose Due to Noble Gases

The beta air dose from the stack or vent noble gas releases is calculated using the semi-infinite cloud immersion dose factor in beta radiation. The factor X/Q takes into account the dispersion of releases to the most conservative location.

Beta air dose due to noble gases:

$$D_\beta = 3.17E\text{-}8 \sum_i N_i [(X/Q)_v Q_{iv} + (X/Q)_s Q_{is}] \times t$$

D_β = Beta air dose (mrad) for the period of concern

N_i = The constant accounting for the beta air dose from immersion in the semi-infinite cloud for each identified noble gas nuclide, i. Listed on Table D 3-3, mrad/yr per uCi/m^3. (From Reg. Guide 1.109).

t = The duration of the dose period of concern, sec

Where all other parameters have been previously defined.

2.3.4 Organ Dose Due to I-131, I-133, Tritium and Particulates with half-lives greater than 8 days.

The organ dose is based on the same equation as the dose rate equation except the dose is compared to the 10CFR50 dose limits. The factor R_i takes into account the dose received from the ground plane, inhalation, food (cow milk, cow meat and vegetation) pathways. W_s and W_v take into account the atmospheric dispersion from the release point to the location of the most conservative receptor for each of the respective pathways. The release is totaled over the period of concern. The R_i factors are discussed in Appendix C. Organ dose D_{at} due to iodine-131, iodine-133, tritium and radionuclides in particulate

form with half-lives greater than 8 days.

$$D_{at} = 3.17E-8 \sum_j [\sum_i R_{ijat} [W_s Q_{is} + W_v Q_{iv}]] \times t$$

Where:

D_{at} = Dose to the critical organ t, for age group a, mrem

t = The duration of the dose period of concern, sec

Where all other parameters have been previously defined in Section 2.2.4.

2.4 I-133 and I-135 Estimation

Stack and vent effluent iodine cartridges are analyzed to a sensitivity of at least 1E-12 uCi/cc. If detected in excess of the LLD, the I-131 and I-133 analysis results will be reported directly from each cartridge analyzed. Periodically, (usually quarterly but on a monthly frequency if effluent iodines are routinely detected) a short-duration (12 to 24 hour) effluent sample is collected and analyzed to establish an I-135/I-131 ratio and an I-133/I-131 ratio, if each activity exceeds LLD. The short-duration ratio is used to confirm the routinely measured I-133 values. The short-duration I-135/I-131 ratio (if determined) is used with the I-131 release to estimate the I-135 release. The short-duration I-133/I-131 ratio may be used with the I-131 release to estimate the I-133 release if the directly measured I-133 release appears non-conservative.

2.5 Isokinetic Sampling

Sampling systems for the stack and vent effluent releases are designed to maintain isokinetic sample flow at normal ventilation flow rates. During periods of reduced ventilation flow, sample flow may be maintained at a minimum flow rate (above the calculated isokinetic rate) in order to minimize sample line losses due to particulate deposition at low velocity.

2.6 Use of Concurrent Meteorological Data vs. Historical Data

It is the intent to use dispersion parameters based on historical meteorological data to set alarm points and to determine or predict dose and dose rates in the environment due to gaseous effluents. If effluent levels approach limiting values, meteorological conditions concurrent with the time of release may be used to determine gaseous pathway doses.

2.7 Gaseous Radwaste Treatment System Operation

Part I, Section D 3.2.4 requires the GASEOUS RADWASTE TREATMENT SYSTEM to be in operation whenever the main condenser air ejector system is in operation. The system may be operated for short periods with the charcoal beds bypassed to facilitate transients. The components of the system which normally should operate to treat offgas

are the Preheater, Recombiner, Condenser, Dryer, Charcoal Adsorbers, HEPA Filter, and Vacuum Pump. (See Appendix D, Offgas System).

2.8 Ventilation Exhaust Treatment System Operation

Part I, Section D 3.2.5 requires the VENTILATION EXHAUST TREATMENT SYSTEM to be FUNCTIONAL when projected doses in 31 days due to iodine and particulate releases would exceed 0.3 mrem to any organ of a member of the public. The appropriate components, which affect iodine or particulate release, to be FUNCTIONAL are:

1) HEPA Filter - Radwaste Decon Area
2) HEPA Filter - Radwaste Equipment Area
3) HEPA Filter - Radwaste General Area

Whenever one of these filters is not FUNCTIONAL, iodine and particulate dose projections will be made for 31-day intervals starting with filter nonfunctionality, and continuing as long as the filter remains nonfunctional, in accordance with DSR 3.2.5.1. Predicted release rates will be used, along with the methodology of Section 2.3.4. (See Appendix D, Gaseous Radiation Monitoring.)

3.0 URANIUM FUEL CYCLE

The "Uranium Fuel Cycle" is defined in 40 CFR Part 190.02 (b) as follows:

"Uranium fuel cycle means the operations of milling of uranium ore chemical conversion of uranium, isotopic enrichment of uranium, fabrication of uranium fuel, generation of electricity by a light-water-cooled nuclear power plant using uranium fuel, and reprocessing of spent uranium fuel, to the extent that these directly support the production of electrical power for public use utilizing nuclear energy, but excludes mining operations, operations at waste disposal sites, transportation of any radioactive material in support of these operations, and the reuse of recovered non-uranium special nuclear and by-product materials from the cycle."

Sections D 3.1.2, D 3.2.2, and D 3.2.3 of Part I requires that when the calculated doses associated with the effluent releases exceed twice the applicable quarter or annual limits, the licensee shall evaluate the calendar year doses and, if required, submit a Special Report to the NRC and limit subsequent releases such that the dose commitment to a real individual from all uranium fuel cycle sources is limited to 25 mrem to the total body or any organ (except the thyroid, which is limited to 75 mrem). This report is to demonstrate that radiation exposures to all real individuals from all uranium fuel cycle sources (including all liquid and gaseous effluent pathways and direct radiation) are less than the limits in 40 CFR Part 190. If releases that result in doses exceeding the 40 CFR 190 limits have occurred, then a variance from the NRC to permit such releases will be requested and if possible, action will be taken to reduce subsequent releases.

The report to the NRC shall contain:

1) Identification of all uranium fuel cycle facilities or operations within 5 miles of the nuclear power reactor units at the site, that contribute to the annual dose of the maximum exposed member of the public.

2) Identification of the maximum exposed member of the public and a determination of the total annual dose to this person from all existing pathways and sources of radioactive effluents and direct radiation.

The total body and organ doses resulting from radioactive material in liquid effluents from Nine Mile Point Unit 2 will be summed with the doses resulting from the releases of noble gases, radioiodines, and particulates. The direct dose components will also be determined by either calculation or actual measurement. Actual measurements will utilize environmental TLD dosimetry. Calculated measurements will utilize engineering calculations to determine a projected direct dose component. In the event calculations are used, the methodology will be detailed as required by Technical Specification 5.6.3. The doses from Nine Mile Point Unit 2 will be added to the doses to the maximum exposed individual that are contributed from other uranium fuel cycle operations within 5 miles of the site.

For the purpose of calculating doses, the results of the Environmental Monitoring Program may be included to provide more refined estimates of doses to a real maximum exposed individual. Estimated doses, as calculated from station effluents, may be replaced by doses calculated from actual environmental sample results.

3.1 Evaluation of Doses From Liquid Effluents

For the evaluation of doses to real members of the public from liquid effluents, the fish consumption and shoreline sediment ground dose will be considered. Since the doses from other aquatic pathways are insignificant, fish consumption and shoreline sediment are the only two pathways that will be considered. The dose associated with fish consumption may be calculated using effluent data and Regulatory Guide 1.109 methodology or by calculating a dose to man based on actual fish sample analysis data. Because of the nature of the receptor location and the extensive fishing in the area, the critical individual may be a teenager or an adult. The dose associated with shoreline sediment is based on the assumption that the shoreline would be utilized as a recreational area. This dose may be derived from liquid effluent data and Regulatory Guide 1.109 methodology or from actual shoreline sediment sample analysis data.

Equations used to evaluate fish and shoreline sediment samples are based on Regulatory Guide 1.109 methodology. Because of the sample medium type and the half-lives of the radionuclides historically observed, the decay corrected portions of the equations are deleted. This does not reduce the conservatism of the calculated doses but increases the simplicity from an evaluation point of view. Table D 3-24 presents the parameters used for calculating doses from liquid effluents.

The dose from fish sample media is calculated as:

$$R_{apj} = \sum_i [C_{if} \ (U) \ (D_{aipj}) \ f] \ (1E+3)$$

Where:

R_{apj}	=	The total annual dose to organ j, of an individual of age group a, from nuclide i, via fish pathway p, in mrem per year; ex. if calculating to the adult whole body, then $R_{apj} = R_{wb}$ and $D_{aipj} = D_{iWB}$
C_{if}	=	The concentration of radionuclide i in fish samples in pCi/gram
U	=	The consumption rate of fish
1E+3	=	Grams per kilogram
(D_{aipj})	=	The ingestion dose factor for age group a, nuclide i, fish pathway p, and organ j, (Reg. Guide 1.109, Table E-11) (mrem/pCi). ex. when calculating to the adult whole body $D_{aipj} = D_{iWB}$
f	=	The fractional portion of the year over which the dose is applicable

The dose from shoreline sediment sample media is calculated as:

$$R_{apj} = \sum_i [C_{is} \ (U) \ (4E+4) \ (0.3) \ (D_{aipj}) \ f]$$

Where:

R_{apj}	=	The total annual dose to organ j, of an individual of age group a, from nuclide i, via the sediment pathway p, in mrem per year; ex. if calculating to the adult whole body, then $R_{apj} = R_{WB}$ and $D_{aipj} = D_{iWB}$
C_{is}	=	The concentration of radionuclide i in shoreline sediment in pCi/gram
U	=	The usage factor, (hr/yr) (Reg. Guide 1.109)
4E+4	=	The product of the assumed density of shoreline sediment (40 kilogram per square meter to a depth of 2.5 cm) times the number of grams per kilogram
0.3	=	The shore width factor for a lake
D_{aipj}	=	The dose factor for age group a, nuclide i, sediment pathway s, and organ j. (Reg. Guide 1.109, Table E-6) (mrem/hr per pCi/m^2); ex. when calculating to the adult whole body $D_{aipj} = D_{iWB}$
f	=	The fractional portion of the year over which the dose is applicable

NOTE: Because of the nature of the receptor location and the extensive fishing in the area, the critical individual may be a teenager or an adult.

3.2 Evaluation of Doses From Gaseous Effluents

For the evaluation of doses to real members of the public from gaseous effluents, the pathways contained in section 2 of the calculational methodologies section will be considered and include ground deposition, inhalation, cows milk, goats milk, meat, and food products (vegetation). However, any updated field data may be utilized that concerns locations of real individuals, real time meteorological data, location of critical receptors, etc. Data from the most recent census and sample location surveys should be utilized. Doses may also be calculated from actual environmental sample media, as available. Environmental sample media data such as TLD, air sample, milk sample and vegetable (food crop) sample data may be utilized in lieu of effluent calculational data.

Doses to members of the public from the pathways considered in section 2 as a result of gaseous effluents will be calculated using the methodology of Regulatory Guide 1.109 or the methodology of the ODCM, as applicable. Doses calculated from environmental sample media will be based on methodologies found in Regulatory Guide 1.109.

3.3 Evaluation of Doses From Direct Radiation

The dose contribution as a result of direct radiation shall be considered when evaluating whether the dose limitations of 40 CFR 190 have been exceeded. Direct radiation doses as a result of the reactor, turbine and radwaste buildings and outside radioactive storage tanks (as applicable) may be evaluated by engineering calculations or by evaluating environmental TLD results at critical receptor locations, site boundary or other special interest locations. For the evaluation of direct radiation doses utilizing environmental TLDs, the critical receptor in question, such as the critical residence, etc., will be compared to the control locations.

The comparison involves the difference in environmental TLD results between the receptor location and the average control location result.

3.4 Doses to Members of the Public Within the Site Boundary

The Radioactive Effluent Release Report shall include an assessment of the radiation doses from radioactive liquid and gaseous effluents to members of the public due to their activities inside the site boundary as defined by Figure D 1.0-1. A member of the public, would be represented by an individual who visits the sites' Energy Center for the purpose of observing the educational displays or for picnicking and associated activities.

Fishing is a major recreational activity in the area and on the Site as a result of the salmon and trout populations in Lake Ontario. Fishermen have been observed fishing at the shoreline near the Energy Center from April through December in all weather conditions. Thus, fishing is the major activity performed by members of the public within the site boundary. Based on the nature of the fishermen and undocumented observations, it is conservatively assumed that the maximum exposed individual spends an average of 8 hours per week fishing from the shoreline at a location between the Energy Center and the Unit 1 facility. This estimate is considered conservative but not necessarily excessive and accounts for occasions where individuals may fish more on weekends or on a few days in March of the year.

The pathways considered for the evaluation include the inhalation pathway with the resultant lung dose, the ground dose pathway with the resultant whole body and skin dose and the direct radiation dose pathway with the associated total body dose. The direct radiation dose pathway, in actuality, includes several pathways. These include: the direct radiation gamma dose to an individual from an overhead plume, a gamma submersion plume dose, possible direct radiation dose from the facility and a ground plane dose (deposition). Because the location is in close proximity to the site, any beta plume submersion dose is felt to be insignificant.

Other pathways, such as the ingestion pathway, are not applicable. In addition, pathways associated with water related recreational activities, other than fishing, are not applicable here. These include swimming, boating and wading which are prohibited at the facility.

The inhalation pathway is evaluated by identifying the applicable radionuclides (radioiodine, tritium and particulates) in the effluent for the appropriate time period. The radionuclide concentrations are then multiplied by the appropriate X/Q value, inhalation dose factor, air intake rate, and the fractional portion of the year in question. Thus, the inhalation pathway is evaluated using the following equation adapted from Regulatory Guide 1.109. Table D 3-24 presents the reference for the parameters used in the following equation.

NOTE: The following equation is adapted from equations C-3 and C-4 of Regulatory Guide 1.109. Since many of the factors are in units of pCi/m^3, m^3/sec., etc., and since the radionuclide decay expressions have been deleted because of the short distance to the receptor location, the equation presented here is not identical to the Regulatory Guide equations.

$$D_{ja} = \sum_i [(C_i) F \ (X/Q) (DFA)_{ija} (BR)_a t]$$

Where:

D_{ja} = The maximum dose from all nuclides to the organ j and age group (a) in mrem/yr; ex. if calculating to the adult lung, then $D_{ja} = D_L$ and $DFA_{ija} = DFA_{iL}$

C_i = The average concentration in the stack or vent release of nuclide i for the period in pCi/m^3.

F = Unit 2 average stack or vent flowrate in m^3/sec.

X/Q = The plume dispersion parameter for a location approximately 0.50 miles west of NMP-2 (The plume dispersion parameters are 9.6E-07 (stack) and 2.8E-06 (vent) and were obtained from the C.T. Main five year average annual X/Q tables. The vent X/Q (ground level) is ten times the listed 0.50 mile X/Q because the vent is approximately 0.3 miles from the receptor location. The stack (elevated) X/Q is conservative when based on 0.50 miles because of the close proximity of the stack and the receptor location.

$(DFA)_{ija}$ = the dose factor for nuclide i, organ j, and age group a in mrem per pCi (Reg. Guide 1.109, Table E-7); ex. if calculating to the adult lung the $DFA_{ija} = DFA_{iL}$

$(BR)_a$ = annual air intake for individuals in age group a in M^3 per year (obtained from Table E-5 of Regulatory Guide 1.109).

t = fractional portion of the year for which radionuclide i was detected and for which a dose is to be calculated (in years).

The ground dose pathway (deposition) will be evaluated by obtaining at least one soil or shoreline sediment sample in the area where fishing occurs. The dose will then be calculated using the sample results, the time period in question, and the methodology based on Regulatory Guide 1.109 as presented in Section 3.1. The resultant dose may be adjusted for a background dose by subtracting the applicable off-site control soil or shoreline sediment sample radionuclide activities. In the event it is noted that fishing is not performed from the shoreline but is instead performed in the water (i.e., the use of waders), then the ground dose pathway (deposition) will not be evaluated.

The direct radiation gamma dose pathway includes any gamma doses from an overhead plume, submersion in the plume, possible radiation from the facility and ground plane dose (deposition). This general pathway will be evaluated by average environmental TLD readings. At least two environmental TLDs will be used at one location in the approximate area where fishing occurs. The TLDs will be placed in the field on approximately the beginning of each calendar quarter and removed approximately at the end of each calendar quarter (quarter 2, 3, and 4).

The average TLD readings will be adjusted by the average control TLD readings. This is accomplished by subtracting the average quarterly control TLD value from the average fishing location TLD value. The applicable quarterly control TLD values will be used after adjusting for the appropriate time period (as applicable). In the event of loss or theft of the TLDs, results from a TLD or TLDs in a nearby area may be utilized.

4.0 ENVIRONMENTAL MONITORING PROGRAM

4.1 Sampling Stations

The current sampling locations are specified in Table D 5-1 and Figures D 5.1-1 and D 5.1-2. The meteorological tower location is shown on Figure D 5.1-1 and is located where TLD location #17 is identified. The Environmental Monitoring Program is a joint effort between the owners and operators of the Nine Mile Point Units 1 and 2 and the James A. FitzPatrick Nuclear Power Plants. Sampling locations are chosen on the basis of historical average dispersion or deposition parameters from both units. The environmental sampling location coordinates shown on Table D 5-1 are based on the NMP-2 reactor centerline.

The average dispersion and deposition parameters for the three units have been calculated for a 5 year period, 1978 through 1982. Average dispersion or deposition parameters for the site are calculated using the 1978 through 1982 data and are used to compare the results of the annual land use census. If it is determined that sample locations required by Control D 3.5.1 are unavailable or new locations are identified that yield a significantly higher (i.e., 50%) calculated D/Q value, actions will be taken as required by Controls D 3.5.1 and D 3.5.2 and the Radiological Environmental Monitoring Program updated accordingly.

4.2 Interlaboratory Comparison Program

Analyses shall be performed on samples containing known quantities of radioactive materials that are supplied as part of a Commission approved or sponsored Interlaboratory Comparison Program, such as the EPA Crosscheck Program. Participation shall be only for those media, e.g., air, milk, water, etc., that are included in the Nine Mile Point Environmental Monitoring Program and for which cross check samples are available. An attempt will be made to obtain a QC sample to program sample ratio of 5% or better. The Quality Control sample results shall be reported in the Annual Radiological Environmental Operating Report so that the Commission staff may evaluate the results.

Specific sample media for which EPA Cross Check Program samples are available include the following:

- gross beta in air particulate filters
- gamma emitters in air particulate filters
- gamma emitters in milk
- gamma emitters in water
- tritium in water
- I-131 in water

4.3 Capabilities for Thermoluminescent Dosimeters Used for Environmental Measurements

Required detection capabilities for thermoluminescent dosimeters used for environmental measurements required by the Technical Specifications are based on ANSI Standard N545, section 4.3. TLDs are defined as phosphors packaged for field use. In regard to the detection capabilities for thermoluminescent dosimeters, only one determination is required to evaluate the above capabilities per type of TLD. Furthermore, the above capabilities may be determined by the vendor who supplies the TLDs. Required detection capabilities are as follows.

4.3.1 Uniformity shall be determined by giving TLDs from the same batch an exposure equal to that resulting from an exposure rate of 10 uR/hr during the field cycle. The responses obtained shall have a relative standard deviation of less than 7.5%. A total of at least 5 TLDs shall be evaluated.

4.3.2 Reproducibility shall be determined by giving TLDs repeated exposures equal to that resulting from an exposure rate of 10 uR/hr during the field cycle. The average of the relative standard deviations of the responses shall be less than 3.0%. A total of at least 4 TLDs shall be evaluated.

4.3.3 Dependence of exposure interpretation on the length of a field cycle shall be examined by placing TLDs for a period equal to at least a field cycle and a period equal to half the same field cycle in an area where the exposure rate is known to be constant. This test shall be conducted under approximate average winter temperatures and approximate average summer temperatures. For these tests, the ratio of the response obtained in the field cycle to twice that obtained for half the field cycle shall not be less than 0.85. At least 6 TLDs shall be evaluated.

4.3.4 Energy dependence shall be evaluated by the response of TLDs to photons for several energies between approximately 30 keV and 3 MeV. The response shall not differ from that obtained with the calibration source by more than 25% for photons with energies greater than 80 keV and shall not be enhanced by more than a factor of two for photons with energies less than 80 keV. A total of at least 8 TLDs shall be evaluated.

4.3.5 The directional dependence of the TLD response shall be determined by comparing the response of the TLD exposed in the routine orientation with respect to the calibration source with the response obtained for different orientations. To accomplish this, the TLD shall be rotated through at least two perpendicular planes. The response averaged over all directions shall not differ from the response obtained in the standard calibration position by more than 10%. A total of at least 4 TLDs shall be evaluated.

4.3.6 Light dependence shall be determined by placing TLDs in the field for a period equal to the field cycle under the four conditions found in ANSI N545, section 4.3.6. The results obtained for the unwrapped TLDs shall not differ from those obtained for the TLDs wrapped in aluminum foil by more than 10%. A total of at least 4 TLDs shall be evaluated for each of the four conditions.

4.3.7 Moisture dependence shall be determined by placing TLDs (that is, the phosphors packaged for field use) for a period equal to the field cycle in an area where the exposure rate is known to be constant. The TLDs shall be exposed under two conditions: (1) packaged in a thin, sealed plastic bag; and (2) packaged in a thin, sealed plastic bag with sufficient water to yield observable moisture throughout the field cycle. The TLD or phosphor, as appropriate, shall be dried before readout. The response of the TLD exposed in the plastic bag containing water shall not differ from that exposed in the regular plastic bag by more than 10%. A total of at least 4 TLDs shall be evaluated for each condition.

4.3.8 Self irradiation shall be determined by placing TLDs for a period equal to the field cycle in an area where the exposure rate is less than 10 uR/hr and the exposure during the field cycle is known. If necessary, corrections shall be applied for the dependence of exposure interpretation on the length of the field cycle (ANSI N545, section 4.3.3). The average exposure inferred from the responses of the TLDs shall not differ from the known exposure by more than an exposure equal to that resulting from an exposure rate of 10 uR/hr during the field cycle. A total of at least 3 TLDs shall be evaluated.

TABLE D 2-1

LIQUID EFFLUENT DETECTORS RESPONSES*

NUCLIDE	(CPM/μCi/ml X 10^8)
Sr 89	0.78E-04
Sr 91	1.22
Sr 92	0.817
Y 91	2.47
Y 92	0.205
Zr 95	0.835
Nb 95	0.85
Mo 99	0.232
Tc 99m	0.232
Te 132	1.12
Ba 140	0.499
Ce 144	0.103
Br 84	1.12
I 131	1.01
I 132	2.63
I 133	0.967
I 134	2.32
I 135	1.17
Cs 134	1.97
Cs 136	2.89
Cs 137	0.732
Cs 138	1.45
Mn 54	0.842
Mn 56	1.2
Fe 59	0.863
Co 58	1.14
Co 60	1.65

* Values from SWEC purchase specification NMP2-P281F.

TABLE D 2-2
A_{iat} VALUES - LIQUID[1]
ADULT
mrem - ml
hr - uCi

NUCLIDE	T BODY	GI-TRACT	BONE	LIVER	KIDNEY	THYROID	LUNG
H 3	3.67E-1	3.67E-1	--	3.67E-1	3.67E-1	3.67E-1	3.67E-1
Cr 51	1.26	3.13E2	1.18E-2	1.18E-2	2.86E-1	7.56E-1	1.66
Cu 64	1.28	2.33E2	--	2.73	6.89	--	--
Mn 54	8.38E2	1.34E4	3.98	4.38E3	1.31E3	3.98	3.98
Fe 55	1.07E2	2.62E2	6.62E2	4.57E2	--	--	2.55E2
Fe 59	9.28E2	8.06E3	1.03E3	2.42E3	7.53E-1	7.53E-1	6.76E2
Co 57	5.43E1	5.36E2	--	2.11E1	--	--	--
Co 58	2.01E2	1.81E3	1.07	9.04E1	1.07	1.07	1.07
Co 60	6.36E2	4.93E3	6.47E1	3.24E2	6.47E1	6.47E1	6.47E1
Zn 65	3.32E4	4.63E4	2.31E4	7.35E4	4.92E4	2.21	2.21
Sr 89	6.38E2	3.57E3	2.22E4	6.18E-5	6.18E-5	6.18E-5	6.18E-5
Sr 90	1.36E5	1.60E4	5.55E5	--	--	--	--
Sr 92	1.44E-2	6.61	3.34E-1	--	--	--	--
Zr 95	7.59E-1	2.83E2	9.77E-1	7.88E-1	8.39E-1	6.99E-1	6.99E-1
Mn 56	3.07E-2	5.52	--	1.73E-1	2.20E-1	--	--
Mo 99	1.60E1	1.95E2	1.97E-3	8.42E1	1.91E2	1.97E-3	1.97E-3
Na 24	1.34E2	1.34E2	1.34E2	1.34E2	1.34E2	1.34E2	1.34E2
I 131	1.16E2	5.36E1	1.42E2	2.03E2	3.48E2	6.65E4	2.77E-2
I 132	4.34E-3	2.33E-3	4.64E-3	1.24E-2	1.98E-2	4.34E-1	--
I 133	1.22E1	3.59E1	2.30E1	3.99E1	6.97E1	5.87E3	--
I 135	1.32E0	3.79E0	1.28E0	3.36E0	5.39E0	2.22E2	--
Ni 65	1.14E-2	6.35E-1	1.93E-1	2.50E-2	--	--	--
Cs 134	5.79E5	1.24E4	2.98E5	7.08E5	2.29E5	2.04E1	7.61E4
Cs 136	8.42E4	1.33E4	2.96E4	1.17E5	6.51E4	3.28E-1	8.92E3
Cs 137	3.42E5	1.01E4	3.82E5	5.22E5	1.77E5	3.10E1	5.89E4
Ba 140	1.37E1	4.30E2	2.09E2	3.04E-1	1.31E-1	4.17E-2	1.92E-1
Ce 141	3.79E-2	8.81E1	6.93E-2	5.83E-2	4.60E-2	3.53E-2	3.53E-2
Nb 95m	1.51E1	1.44E6	3.53E1	2.74E1	2.70E1	--	--
Nb 95	1.31E2	1.48E6	4.38E2	2.44E2	2.41E2	3.56E-1	3.56E-1
La 140	1.62E-2	3.72E3	1.03E-1	5.36E-2	2.83E-3	2.83E-3	2.83E-3
Ce 144	3.03E-1	6.15E2	2.02	9.66E-1	6.57E-1	2.06E-1	2.06E-1
Tc 99m	2.05E-2	9.54E-01	5.71E-4	1.61E-3	2.45E-2	--	7.90E-4
Np 239	1.8E-3	4.47E2	2.28E-2	2.78E-3	7.40E-3	5.95E-4	5.95E-4
Te 132	1.18E3	5.97E4	1.95E3	1.26E3	1.22E4	1.39E3	2.66E-3
Zr 97	5.08E-4	3.39E2	5.44E-3	1.10E-3	1.66E-3	7.11E-6	7.11E-6
W 187	4.31E1	4.04E4	1.48E2	1.23E2	4.43E-5	4.43E-5	4.43E-5
Ag 110m	1.09E1	3.94E2	1.14E1	1.13E1	1.22E1	1.04E1	1.04E1
Sb 124	4.72E1	3.36E2	1.07E3	4.33E1	4.31E1	4.31E1	5.12E1
Zn 69m	5.40E1	3.60E4	2.46E2	5.90E2	3.57E2	6.90E-2	6.90E-2
Au 199	3.95	7.33E2	1.26E-1	4.67	1.79E1	1.26E-1	1.26E-1
As 76	5.94	1.24E4	1.60E-1	6.19	1.16E1	1.60E-1	1.60E-1

[1] Calculated in accordance with NUREG 0133, Section 4.3.1; and Regulatory Guide 1.109, Regulatory position C, Section 1.

TABLE D 2-3
A_{iat} VALUES - LIQUID[1]
TEEN
$\frac{mrem - ml}{hr - uCi}$

NUCLIDE	T BODY	GI-TRACT	BONE	LIVER	KIDNEY	THYROID	LUNG
H 3	2.73E-1	2.73E-1	--	2.73E-1	2.73E-1	2.73E-1	2.73E-1
Cr 51	1.35	2.16E2	6.56E-2	6.56E-2	3.47E-1	7.79E-1	1.90
Cu 64	1.35	2.23E2	--	2.87	7.27	--	--
Mn 54	8.75E2	8.84E3	2.22E1	4.32E3	1.31E3	2.22E1	2.22E1
Fe 55	1.15E2	2.13E2	6.93E2	4.91E2	--	--	3.11E2
Fe 59	9.59E2	5.85E3	1.06E3	2.48E3	4.20	4.20	7.84E2
Co 57	1.44E2	4.08E2	--	2.19E1	--	--	--
Co 58	2.10E2	1.23E3	5.98	9.47E1	5.98	5.98	5.98
Co 60	9.44E2	3.73E3	3.61E2	6.20E2	3.61E2	3.61E2	3.61E2
Zn 65	3.40E4	3.08E4	2.10E4	7.28E4	4.66E4	1.24E1	1.24E1
Sr 89	6.92E2	2.88E3	2.42E4	3.45E-4	3.45E-4	3.45E-4	3.45E-4
Sr 90	1.14E5	1.30E4	4.62E5	--	--	--	--
Sr 92	1.54E-2	9.19E1	3.61E-1	--	--	--	--
Zr 95	3.96	2.10E2	4.19	3.99	4.03	3.90	3.90
Mn 56	3.22E-2	1.19E1	--	1.81E-1	2.29E-1	--	--
Mo 99	1.71E1	1.60E2	1.10E-2	8.95E1	2.05E2	1.10E-2	1.10E-2
Na 24	1.38E2	1.38E2	1.38E2	1.38E2	1.38E2	1.38E2	1.38E2
I 131	1.14E2	4.21E1	1.52E2	2.12E2	3.66E2	6.19E4	1.55E-1
I 132	4.56E-3	5.54E-3	4.86E-3	1.27E-2	2.00E-2	4.29E-1	--
I 133	1.28E1	3.17E1	2.47E1	4.19E1	7.35E1	5.85E3	1.02E-4
I 135	1.76E0	3.84E0	1.34E0	3.46E0	5.47E0	2.23E2	--
Ni 65	1.21E-2	1.44	2.08E-1	2.66E-2	--	--	--
Cs 134	3.33E5	9.05E3	3.05E5	7.18E5	2.28E5	1.14E2	8.72E4
Cs 136	7.87E4	9.44E3	2.98E4	1.17E5	6.38E4	1.83	1.01E4
Cs 137	1.90E5	7.91E3	4.09E5	5.44E5	1.85E5	1.73E2	7.21E4
Ba 140	1.44E1	3.40E2	2.21E2	5.03E-1	3.25E-1	2.33E-1	4.15E-1
Ce 141	2.00E-1	6.85E1	2.33E-1	2.21E-1	2.08E-1	1.97E-1	1.97E-1
Nb 95m	1.69E1	1.14E6	3.87E1	2.99E1	2.96E1	--	--
Nb 95	1.17E2	1.05E6	4.43E2	2.47E2	2.39E2	1.99	1.99
La 140	2.97E-2	3.01E3	1.22E-1	6.82E-2	1.58E-2	1.58E-2	1.58E-2
Ce 144	1.25	4.83E2	3.07	1.94	1.62	1.15	1.15
Tc 99m	2.11E-2	1.07	5.84E-4	1.63E-3	2.43E-2	--	9.04E-4
Np 239	4.63E-3	3.78E2	2.82E-2	5.67E-3	1.07E-2	3.32E-3	3.32E-3
Te 132	1.23E3	4.13E4	2.06E3	1.30E3	1.25E4	1.37E3	1.48E-2
Zr 97	5.68E-4	3.11E2	5.84E-3	1.19E-3	1.78E-3	3.97E-5	3.97E-5
W 187	4.55E1	3.52E4	1.59E2	1.30E2	2.47E-4	2.47E-4	2.47E-4
Ag 110m	5.85E1	3.17E2	5.89E1	5.88E1	5.97E1	5.79E1	5.79E1
Sb 124	2.45E2	4.53E2	2.51E2	2.41E2	2.41E2	2.41E2	2.50E2
Zn 69m	5.76E1	3.43E4	2.65E2	6.24E2	3.79E2	3.85E-1	3.85E-1
Au 199	4.85	5.78E2	7.04E-1	5.60	2.01E1	7.04E-1	7.04E-1
As 76	7.18	1.06E4	8.92E-1	7.40	1.33E1	8.92E-1	8.92E-1

[1]Calculated in accordance with NUREG 0133, Section 4.3.1; and Regulatory Guide 1.109, Regulatory position C, Section 1.

TABLE D 2-4
A_{iat} VALUES - LIQUID[1]
CHILD
mrem - ml
hr - uCi

NUCLIDE	T BODY	GI-TRACT	BONE	LIVER	KIDNEY	THYROID	LUNG
H 3	3.34E-1	3.34E-1	--	3.34E-1	3.34E-1	3.34E-1	3.34E-1
Cr 51	1.39	7.29E1	1.37E-2	1.37E-2	2.22E-1	7.76E-1	1.41
Cu 64	1.60	1.25E2	--	2.65	6.41	--	--
Mn 54	9.02E2	2.83E3	4.65	3.37E3	9.49E2	4.65	4.65
Fe 55	1.50E2	8.99E1	9.15E2	4.85E2	--	--	2.74E2
Fe 59	1.04E3	2.18E3	1.29E3	2.09E3	8.78E-1	8.78E-1	6.08E2
Co 57	6.24E1	1.62E2	--	2.00E1	--	--	--
Co 58	2.21E2	4.20E2	1.25	7.30E1	1.25	1.25	1.25
Co 60	7.03E2	1.25E3	7.55E1	2.88E2	7.55E1	7.55E1	7.55E1
Zn 65	3.56E4	1.01E4	2.15E4	5.73E4	3.61E4	2.58	2.58
Sr 89	9.13E2	1.24E3	3.20E4	--	--	--	--
Sr 90	1.06E5	5.62E3	4.17E5	--	--	--	--
Sr 92	1.85E-2	8.73	4.61E-1	--	--	--	--
Zr 95	8.95E-1	9.36E1	1.22	9.04E-1	9.43E-1	8.15E-1	8.15E-1
Mn 56	3.73E-2	2.39E1	--	1.65E-1	2.00E-1	--	--
Mo 99	2.22E1	7.42E1	2.30E-3	8.98E1	1.92E2	2.30E-3	2.30E-3
Na 24	1.51E2	1.51E2	1.51E2	1.51E2	1.51E2	1.51E2	1.51E2
I 131	1.14E2	1.80E1	2.00E2	2.01E2	3.31E2	6.66E4	3.23E-2
I 132	5.08E-3	1.30E-2	6.01E-3	1.10E-2	1.69E-2	5.13E-1	--
I 133	1.51E1	1.60E1	3.22E1	3.98E1	6.64E1	7.40E3	--
I 135	1.53E0	2.30E0	1.68E0	3.02E0	4.63E0	2.67E2	--
Ni 65	1.46E-2	3.07	2.66E-1	2.51E-2	--	--	--
Cs 134	1.27E5	3.28E3	3.68E5	6.04E5	1.87E5	2.38E1	6.72E4
Cs 136	6.26E4	3.40E3	3.52E4	9.67E4	5.15E4	3.82E-1	7.68E3
Cs 137	7.28E4	3.12E3	5.15E5	4.93E5	1.61E5	3.62E1	5.78E4
Ba 140	1.87E1	1.62E2	3.19E2	3.28E-1	1.40E-1	4.87E-2	2.15E-1
Ce 141	4.61E-2	4.14E1	1.08E-1	7.43E-2	5.57E-2	4.12E-2	4.12E-2
Nb 95m	2.14E1	5.28E5	4.99E1	2.92E1	2.68E1	--	--
Nb 95	1.45E2	3.75E5	5.21E2	2.03E2	1.91E2	4.16E-1	4.16E-1
La 140	1.93E-2	1.33E3	1.39E-1	5.09E-2	3.30E-3	3.30E-3	3.30E-3
Ce 144	4.31E-1	2.92E2	3.81	1.36	8.61E-1	2.40E-1	2.40E-1
Tc 99m	2.29E-2	7.87E-1	7.05E-4	1.38E-3	2.01E-2	--	7.02E-4
Np 239	2.40E-3	1.79E2	3.44E-2	3.12E-3	7.70E-3	6.94E-4	6.94E-4
Te 132	1.38E3	1.15E4	2.57E3	1.14E3	1.06E4	1.66E3	3.10E-3
Zr 97	6.99E-4	1.77E2	8.11E-3	1.18E-3	1.69E-3	8.29E-6	8.29E-6
W 187	5.37E1	1.68E4	2.02E2	1.20E2	5.16E-5	5.16E-5	5.16E-5
Ag 110m	1.29E1	1.24E2	1.35E1	1.30E1	1.39E1	1.21E1	1.21E1
Sb 124	5.69E1	1.68E2	6.92E1	5.06E1	5.03E1	5.04E1	6.08E1
Zn 69m	6.80E1	1.87E4	3.37E2	5.75E2	3.34E2	8.05E-2	8.05E-2
Au 199	5.58	2.75E2	1.47E-1	5.02	1.80E1	1.47E-1	1.47E-1
As 76	8.31	5.47E3	1.86E-1	6.58	1.15E1	1.86E-1	1.86E-1

[1]Calculated in accordance with NUREG 0133, Section 4.3.1; and Regulatory Guide 1.109, Regulatory position C, Section 1.

TABLE D 2-5
A_{iat} VALUES - LIQUID[1]
INFANT
mrem - ml
hr - uCi

NUCLIDE	T BODY	GI-TRACT	BONE	LIVER	KIDNEY	THYROID	LUNG
H 3	1.87E-1	1.87E-1	--	1.87E-1	1.87E-1	1.87E-1	1.87E-1
Cr 51	8.21E-3	2.39E-1	--	--	1.17E-3	5.36E-3	1.04E-2
Cu 64	1.96E-2	8.70E-1	--	4.24E-2	7.17E-2	--	--
Mn 54	2.73	4.42	--	1.20E1	2.67	--	--
Fe 55	1.45	6.91E-1	8.42	5.44	--	--	2.66
Fe 59	1.25E1	1.52E1	1.82E1	3.18E1	--	--	9.41
Co 57	1.13E0	2.37E0	--	6.95E1	--	--	--
Co 58	5.36	5.36	--	2.15	--	--	--
Co 60	1.55E1	1.56E1	--	6.55	--	--	--
Zn 65	1.76E1	3.22E1	1.11E1	3.81E1	1.85E1	--	--
Sr 89	4.27E1	3.06E1	1.49E3	--	--	--	--
Sr 90	2.86E3	1.40E2	1.12E4	--	--	--	--
Sr 92	1.56E-5	4.54E-3	4.21E-4	--	--	--	--
Zr 95	2.12E-2	1.49E1	1.23E-1	2.99E-2	3.23E-2	--	--
Mn 56	1.81E-6	9.56E-4	--	1.05E-5	9.05E-6	--	--
Mo 99	2.65	4.48	--	1.36E1	2.03E1	--	--
Na 24	9.61E-1	9.61E-1	9.61E-1	9.61E-1	9.61E-1	9.61E-1	9.61E-1
I 131	9.78	7.94E-1	1.89E1	2.22E1	2.60E1	7.31E3	--
I 132	3.43E-6	7.80E-6	4.75E-6	9.63E-6	1.07E-5	4.52E-4	--
I 133	8.26E-1	4.77E-1	1.94	2.82	3.31	5.13E2	--
I 135	2.38E2	2.36E2	3.29E2	6.54E2	7.28E2	5.86E0	--
Ni 65	2.96E-6	4.96E-4	5.75E-5	6.51E-6	--	--	--
Cs 134	4.30E1	1.16	2.28E2	4.26E2	1.10E2	--	4.50E1
Cs 136	2.81E1	1.14	2.56E1	7.53E1	3.00E1	--	6.13
Cs 137	2.63E1	1.16	3.17E2	3.71E2	9.95E1	--	4.03E1
Ba 140	4.88	2.33E1	9.48E1	9.48E-2	2.25E-2	--	5.82E-2
Ce 141	3.31E-3	1.45E1	4.61E-2	2.81E-2	8.67E-3	--	--
Nb 95m	1.02E3	1.20E1	2.39E3	1.73E3	1.10E3	--	--
Nb 95	5.87E-3	8.57	2.47E-2	1.02E-2	7.28E-3	--	--
La 140	6.52E-4	2.98E1	6.43E-3	2.53E-3	--	--	--
Ce 144	1.01E-1	1.03E2	1.80	7.37E-1	2.98E-1	--	--
Tc 99m	3.17E-4	7.14E-3	1.19E-5	2.46E-5	2.64E-4	--	1.28E-5
Np 239	2.08E-4	1.06E1	4.12E-3	3.68E-4	7.34E-4	--	--
Te 132	4.08	1.62E1	8.83	4.37	2.74E1	6.46	--
Zr 97	1.38E-4	1.92E1	1.76E-3	3.02E-4	3.04E-4	--	--
W 187	4.13E-2	7.02	1.72E-1	1.19E-1	--	--	--
Ag 110m	2.91E-1	2.28E1	6.02E-1	4.39E-1	6.28E-1	--	--
Sb 124	3.95	3.93E1	1.27E1	1.87E-1	--	3.38E-2	7.98
Zn 69m	2.30E-2	3.50	1.24E-1	2.52E-1	1.02E-1	--	--
Au 199	2.23E-1	5.38	--	2.48E-1	6.26E-1	--	--
As 76	8.67E-2	2.85E1	--	8.46E-2	1.03E-1	--	--

[1]Calculated in accordance with NUREG 0133, Section 4.3.1; and Regulatory Guide 1.109, Regulatory position C, Section 1

TABLE D 3-1
OFFGAS PRETREATMENT*
DETECTOR RESPONSE

NUCLIDE	NET CPM/µCi/cc
Kr 83m	--
Kr 85	4.28E+03
Kr 85m	3.85E+03
Kr 87	6.68E+03
Kr 88	3.97E+03
Kr 89	6.48E+03
Xe 131m	--
Xe 133	1.69E+03
Xe 133m	--
Xe 135	4.91E+03
Xe 135m	--
Xe 137	6.89E+03
Xe 138	5.51E+03

* Values from calculation H21C-070

TABLE D 3-2
PLUME SHINE PARAMETERS[1]

NUCLIDE	B_i mrad/yr uCi/sec	V_i mrem/yr uCi/sec
Kr 83m	9.01E-7	-------
Kr 85	6.92E-7	-------
Kr 85m	5.09E-4	4.91E-4
Kr 87	2.72E-3	2.57E-3
Kr 88	7.23E-3	7.04E-3
Kr 89	1.15E-2	1.13E-2
Kr 90	6.57E-3	4.49E-3
Xe 131m	7.76E-6	-------
Xe 133	7.46E-5	6.42E-5
Xe 133m	4.79E-5	3.95E-5
Xe 135	7.82E-4	7.44E-4
Xe 135m	1.45E-3	1.37E-3
Xe 137	6.25E-4	5.98E-4
Xe 138	4.46E-3	4.26E-3
Xe-127	1.96E-3	1.31E-3
Ar 41	5.00E-3	4.79E-3

1 B_i and V_i are calculated for critical site boundary location; 1.6km in the easterly direction. See Appendix B. Those values that show a dotted line were negligible because of high energy absorption coefficients.

TABLE D 3-3
IMMERSION DOSE FACTORS[1]

Nuclide	K_i (γ-Body)[2]	L_i (β-Skin)[2]	M_i (γ-Air)[3]	N_i (β-Air)[3]
Kr 83m	7.56E-02	---	1.93E1	2.88E2
Kr 85m	1.17E3	1.46E3	1.23E3	1.97E3
Kr 85	1.61E1	1.34E3	1.72E1	1.95E3
Kr 87	5.92E3	9.73E3	6.17E3	1.03E4
Kr 88	1.47E4	2.37E3	1.52E4	2.93E3
Kr 89	1.66E4	1.01E4	1.73E4	1.06E4
Kr 90	1.56E4	7.29E3	1.63E4	7.83E3
Xe 131m	9.15E1	4.76E2	1.56E2	1.11E3
Xe 133m	2.51E2	9.94E2	3.27E2	1.48E3
Xe 133	2.94E2	3.06E2	3.53E2	1.05E3
Xe 135m	3.12E3	7.11E2	3.36E3	7.39E2
Xe 135	1.81E3	1.86E3	1.92E3	2.46E3
Xe 137	1.42E3	1.22E4	1.51E3	1.27E4
Xe 138	8.83E3	4.13E3	9.21E3	4.75E3
Ar 41	8.84E3	2.69E3	9.30E3	3.28E3

[1]From, Table B-1 Regulatory Guide 1.109 Rev. 1
[2]mrem/yr per uCi/m^3.
[3]mrad/yr per uCi/m^3.

TABLE D 3-4
DOSE AND DOSE RATE
R_i VALUES - INHALATION - INFANT[1]
mrem/yr / uCi/m^3

NUCLIDE	BONE	LIVER	T. BODY	THYROID	KIDNEY	LUNG	GI-LLI
H 3	--	6.47E2	6.47E2	6.47E2	6.47E2	6.47E2	6.47E2
C 14	2.65E4	5.31E3	5.31E3	5.31E3	5.31E3	5.31E3	5.31E3
Cr 51	--	--	8.95E1	5.75E1	1.32E1	1.28E4	3.57E2
Mn 54	--	2.53E4	4.98E3	--	4.98E3	1.00E6	7.06E3
Fe 55	1.97E4	1.17E4	3.33E3	--	--	8.69E4	1.09E3
Fe 59	1.36E4	2.35E4	9.48E3	--	--	1.02E6	2.48E4
Co 58	--	1.22E3	1.82E3	--	--	7.77E5	1.11E4
Co 60	--	8.02E3	1.18E4	--	--	4.51E6	3.19E4
Zn 65	1.93E4	6.26E4	3.11E4	--	3.25E4	6.47E5	5.14E4
Sr 89	3.98E5	--	1.14E4	--	--	2.03E6	6.40E4
Sr 90	4.09E7	--	2.59E6	--	--	1.12E7	1.31E5
Zr 95	1.15E5	2.79E4	2.03E4	--	3.11E4	1.75E6	2.17E4
Nb 95	1.57E4	6.43E3	3.78E3	--	4.72E3	4.79E5	1.27E4
Mo 99	--	1.65E2	3.23E1	--	2.65E2	1.35E5	4.87E4
I-131	3.79E4	4.44E4	1.96E4	1.48E7	5.18E4	--	1.06E3
I 133	1.32E4	1.92E4	5.60E3	3.56E6	2.24E4	--	2.16E3
Cs 134	3.96E5	7.03E5	7.45E4	--	1.90E5	7.97E4	1.33E3
Cs 137	5.49E5	6.12E5	4.55E4	--	1.72E5	7.13E4	1.33E3
Ba 140	5.60E4	5.60E1	2.90E3	--	1.34E1	1.60E6	3.84E4
La 140	5.05E2	2.00E2	5.15E1	--	--	1.68E5	8.48E4
Ce 141	2.77E4	1.67E4	1.99E3	--	5.25E3	5.17E5	2.16E4
Ce 144	3.19E6	1.21E6	1.76E5	--	5.38E5	9.84E6	1.48E5
Nd 147	7.94E3	8.13E3	5.00E2	--	3.15E3	3.22E5	3.12E4
Ag 110m	9.99E3	7.22E3	5.00E3	--	1.09E4	3.67E6	3.30E4

[1]This and following R_i Tables Calculated in accordance with NUREG 0133, Section 5.3.1, except C 14 values in accordance with Regulatory Guide 1.109 Equation C-8.

TABLE D 3-5
DOSE AND DOSE RATE
R_i VALUES - INHALATION - CHILD
$\frac{mrem/yr}{uCi/m^3}$

NUCLIDE	BONE	LIVER	T. BODY	THYROID	KIDNEY	LUNG	GI-LLI
H 3	--	1.12E3	1.12E3	1.12E3	1.12E3	1.12E3	1.12E3
C 14	3.59E4	6.73E3	6.73E3	6.73E3	6.73E3	6.73E3	6.73E3
Cr 51	--	--	1.54E2	8.55E1	2.43E1	1.70E4	1.08E3
Mn 54	--	4.29E4	9.51E3	--	1.00E4	1.58E6	2.29E4
Fe 55	4.74E4	2.52E4	7.77E3	--	--	1.11E5	2.87E3
Fe 59	2.07E4	3.34E4	1.67E4	--	--	1.27E6	7.07E4
Co 58	--	1.77E3	3.16E3	--	--	1.11E6	3.44E4
Co 60	--	1.31E4	2.26E4	--	--	7.07E6	9.62E4
Zn 65	4.26E4	1.13E5	7.03E4	--	7.14E4	9.95E5	1.63E4
Sr 89	5.99E5	--	1.72E4	--	--	2.16E6	1.67E5
Sr 90	1.01E8	--	6.44E6	--	--	1.48E7	3.43E5
Zr 95	1.90E5	4.18E4	3.70E4	--	5.96E4	2.23E6	6.11E4
Nb 95	2.35E4	9.18E3	6.55E3	--	8.62E3	6.14E5	3.70E4
Mo 99	--	1.72E2	4.26E1	--	3.92E2	1.35E5	1.27E5
I 131	4.81E4	4.81E4	2.73E4	1.62E7	7.88E4	--	2.84E3
I 133	1.66E4	2.03E4	7.70E3	3.85E6	3.38E4	--	5.48E3
Cs 134	6.51E5	1.01E6	2.25E5	--	3.30E5	1.21E5	3.85E3
Cs 137	9.07E5	8.25E5	1.28E5	--	2.82E5	1.04E5	3.62E3
Ba 140	7.40E4	6.48E1	4.33E3	--	2.11E1	1.74E6	1.02E5
La 140	6.44E2	2.25E2	7.55E1	--	--	1.83E5	2.26E5
Ce 141	3.92E4	1.95E4	2.90E3	--	8.55E3	5.44E5	5.66E4
Ce 144	6.77E6	2.12E6	3.61E5	--	1.17E6	1.20E7	3.89E5
Nd 147	1.08E4	8.73E3	6.81E2	--	4.81E3	3.28E5	8.21E4
Ag 110m	1.69E4	1.14E4	9.14E3	--	2.12E4	5.48E6	1.00E5

TABLE D 3-6
DOSE AND DOSE RATE
R_i VALUES - INHALATION - TEEN
$\frac{mrem/yr}{uCi/m^3}$

NUCLIDE	BONE	LIVER	T. BODY	THYROID	KIDNEY	LUNG	GI-LLI
H 3	--	1.27E3	1.27E3	1.27E3	1.27E3	1.27E3	1.27E3
C 14	2.60E4	4.87E3	4.87E3	4.87E3	4.87E3	4.87E3	4.87E3
Cr 51	--	--	1.35E2	7.50E1	3.07E1	2.10E4	3.00E3
Mn 54	--	5.11E4	8.40E3	--	1.27E4	1.98E6	6.68E4
Fe 55	3.34E4	2.38E4	5.54E3	--	--	1.24E5	6.39E3
Fe 59	1.59E4	3.70E4	1.43E4	--	--	1.53E6	1.78E5
Co 58	--	2.07E3	2.78E3	--	--	1.34E6	9.52E4
Co 60	--	1.51E4	1.98E4	--	--	8.72E6	2.59E5
Zn 65	3.86E4	1.34E5	6.24E4	--	8.64E4	1.24E6	4.66E4
Sr 89	4.34E5	--	1.25E4	--	--	2.42E6	3.71E5
Sr 90	1.08E8	--	6.68E6	--	--	1.65E7	7.65E5
Zr 95	1.46E5	4.58E4	3.15E4	--	6.74E4	2.69E6	1.49E5
Nb 95	1.86E4	1.03E4	5.66E3	--	1.00E4	7.51E5	9.68E4
Mo 99	--	1.69E2	3.22E1	--	4.11E2	1.54E5	2.69E5
I 131	3.54E4	4.91E4	2.64E4	1.46E7	8.40E4	--	6.49E3
I 133	1.22E4	2.05E4	6.22E3	2.92E6	3.59E4	--	1.03E4
Cs 134	5.02E5	1.13E6	5.49E5	--	3.75E5	1.46E5	9.76E3
Cs 137	6.70E5	8.48E5	3.11E5	--	3.04E5	1.21E5	8.48E3
Ba 140	5.47E4	6.70E1	3.52E3	--	2.28E1	2.03E6	2.29E5
La 140	4.79E2	2.36E2	6.26E1	--	--	2.14E5	4.87E5
Ce 141	2.84E4	1.90E4	2.17E3	--	8.88E3	6.14E5	1.26E5
Ce 144	4.89E6	2.02E6	2.62E5	--	1.21E6	1.34E7	8.64E5
Nd 147	7.86E3	8.56E3	5.13E2		5.02E3	3.72E5	1.82E5
Ag 110m	1.38E4	1.31E4	7.99E3	--	2.50E4	6.75E6	2.73E5

TABLE D 3-7
DOSE AND DOSE RATE
R_i VALUES - INHALATION - ADULT
$\frac{mrem/yr}{uCi/m^3}$

NUCLIDE	BONE	LIVER	T. BODY	THYROID	KIDNEY	LUNG	GI-LLI
H 3	--	1.26E3	1.26E3	1.26E3	1.26E3	1.26E3	1.26E3
C 14	1.82E4	3.41E3	3.41E3	3.41E3	3.41E3	3.41E3	3.41E3
Cr 51	--	--	1.00E2	5.95E1	2.28E1	1.44E4	3.32E3
Mn 54	--	3.96E4	6.30E3	--	9.84E3	1.40E6	7.74E4
Fe 55	2.46E4	1.70E4	3.94E3	--	--	7.21E4	6.03E3
Fe 59	1.18E4	2.78E4	1.06E4	--	--	1.02E6	1.88E5
Co 58	--	1.58E3	2.07E3	--	--	9.28E5	1.06E5
Co 60	--	1.15E4	1.48E4	--	--	5.97E6	2.85E5
Zn 65	3.24E4	1.03E5	4.66E4	--	6.90E4	8.64E5	5.34E4
Sr 89	3.04E5	--	8.72E3	--	--	1.40E6	3.50E5
Sr 90	9.92E7	--	6.10E6	--	--	9.60E6	7.22E5
Zr 95	1.07E5	3.44E4	2.33E4	--	5.42E4	1.77E6	1.50E5
Nb 95	1.41E4	7.82E3	4.21E3	--	7.74E3	5.05E5	1.04E5
Mo 99	--	1.21E2	2.30E1	--	2.91E2	9.12E4	2.48E5
I 131	2.52E4	3.58E4	2.05E4	1.19E7	6.13E4	--	6.28E3
I 133	8.64E3	1.48E4	4.52E3	2.15E6	2.58E4	--	8.88E3
Cs 134	3.73E5	8.48E5	7.28E5	--	2.87E5	9.76E4	1.04E4
Cs 137	4.78E5	6.21E5	4.28E5	--	2.22E5	7.52E4	8.40E3
Ba 140	3.90E4	4.90E1	2.57E3	--	1.67E1	1.27E6	2.18E5
La 140	3.44E2	1.74E2	4.58E1	--	--	1.36E5	4.58E5
Ce 141	1.99E4	1.35E4	1.53E3	--	6.26E3	3.62E5	1.20E5
Ce 144	3.43E6	1.43E6	1.84E5	--	8.48E5	7.78E6	8.16E5
Nd 147	5.27E3	6.10E3	3.65E2	--	3.56E3	2.21E5	1.73E5
Ag 110m	1.08E4	1.00E4	5.94E3	--	1.97E4	4.63E6	3.02E5

TABLE D 3-8
DOSE AND DOSE RATE
R_i VALUES - GROUND PLANE
ALL AGE GROUPS
$\frac{m^2\text{-mrem/yr}}{uCi/sec}$

NUCLIDE	TOTAL BODY	SKIN
H 3	--	--
C 14	--	--
Cr 51	4.65E6	5.50E6
Mn 54	1.40E9	1.64E9
Fe 55	--	--
Fe 59	2.73E8	3.20E8
Co 58	3.80E8	4.45E8
Co 60	2.15E10	2.53E10
Zn 65	7.46E8	8.57E8
Sr 89	2.16E4	2.51E4
Sr 90	--	--
Zr 95	2.45E8	2.85E8
Nb 95	1.36E8	1.61E8
Mo 99	3.99E6	4.63E6
I 131	1.72E7	2.09E7
I 133	2.39E6	2.91E6
Cs 134	6.83E9	7.97E9
Cs 137	1.03E10	1.20E10
Ba 140	2.05E7	2.35E7
La 140	1.92E7	2.18E7
Ce 141	1.37E7	1.54E7
Ce 144	6.96E7	8.07E7
Nd 147	8.46E6	1.01E7
Ag 110m	3.44E9	4.01E9

TABLE D 3-9
DOSE AND DOSE RATE
R_i VALUES - COW MILK - INFANT

$$\frac{m^2\text{-mrem/yr}}{uCi/sec}$$

NUCLIDE	BONE	LIVER	T. BODY	THYROID	KIDNEY	LUNG	GI-LLI
H 3*	--	2.38E3	2.38E3	2.38E3	2.38E3	2.38E3	2.38E3
C 14*	3.23E6	6.89E5	6.89E5	6.89E5	6.89E5	6.89E5	6.89E5
Cr 51	--	--	8.35E4	5.45E4	1.19E4	1.06E5	2.43E6
Mn 54	--	2.51E7	5.68E6	--	5.56E6	--	9.21E6
Fe 55	8.43E7	5.44E7	1.45E7	--	--	2.66E7	6.91E6
Fe 59	1.22E8	2.13E8	8.38E7	--	--	6.29E7	1.02E8
Co 58	--	1.39E7	3.46E7	--	--	--	3.46E7
Co 60	--	5.90E7	1.39E8	--	--	--	1.40E8
Zn 65	3.53E9	1.21E10	5.58E9	--	5.87E9	--	1.02E10
Sr 89	6.93E9	--	1.99E8	--	--	--	1.42E8
Sr 90	8.19E10	--	2.09E10	--	--	--	1.02E9
Zr 95	3.85E3	9.39E2	6.66E2	--	1.01E3	--	4.68E5
Nb 95	4.21E5	1.64E5	1.17E5	--	1.54E5	--	3.03E8
Mo 99	--	1.04E8	2.03E7	--	1.55E8	--	3.43E7
I 131	6.81E8	8.02E8	3.53E8	2.64E11	9.37E8	--	2.86E7
I 133	8.52E6	1.24E7	3.63E6	2.26E9	1.46E7	--	2.10E6
Cs 134	2.41E10	4.49E10	4.54E9	--	1.16E10	4.74E9	1.22E8
Cs 137	3.47E10	4.06E10	2.88E9	--	1.09E10	4.41E9	1.27E8
Ba 140	1.21E8	1.21E5	6.22E6	--	2.87E4	7.42E4	2.97E7
La 140	2.03E1	7.99	2.06	--	--	--	9.39E4
Ce 141	2.28E4	1.39E4	1.64E3	--	4.28E3	--	7.18E6
Ce 144	1.49E6	6.10E5	8.34E4	--	2.46E5	--	8.54E7
Nd 147	4.43E2	4.55E2	2.79E1	--	1.76E2	--	2.89E5
Ag 110m	2.46E8	1.79E8	1.19E8	--	2.56E8	--	9.29E9

*mrem/yr per $\mu Ci/m^3$.

TABLE D 3-10
DOSE AND DOSE RATE
R_i VALUES - COW MILK - CHILD
$\frac{m^2\text{-mrem/yr}}{uCi/sec}$

NUCLIDE	BONE	LIVER	T. BODY	THYROID	KIDNEY	LUNG	GI-LLI
H 3*	--	1.57E3	1.57E3	1.57E3	1.57E3	1.57E3	1.57E3
C 14*	1.65E6	3.29E5	3.29E5	3.29E5	3.29E5	3.29E5	3.29E5
Cr 51	--	--	5.27E4	2.93E4	7.99E3	5.34E4	2.80E6
Mn 54	--	1.35E7	3.59E6	--	3.78E6	--	1.13E7
Fe 55	6.97E7	3.07E7	1.15E7	--	--	2.09E7	6.85E6
Fe 59	6.52E7	1.06E8	5.26E7	--	--	3.06E7	1.10E8
Co 58	--	6.94E6	2.13E7	--	--	--	4.05E7
Co 60	--	2.89E7	8.52E7	--	--	--	1.60E8
Zn 65	2.63E9	7.00E9	4.35E9	--	4.41E9	--	1.23E9
Sr 89	3.64E9	--	1.04E8	--	--	--	1.41E8
Sr 90	7.53E10	--	1.91E10	--	--	--	1.01E9
Zr 95	2.17E3	4.77E2	4.25E2	--	6.83E2	--	4.98E5
Nb 95	1.86E5	1.03E4	5.69E4	--	1.00E5	--	4.42E8
Mo 99	--	4.07E7	1.01E7	--	8.69E7	--	3.37E7
I 131	3.26E8	3.28E8	1.86E8	1.08E11	5.39E8	--	2.92E7
I 133	4.04E6	4.99E6	1.89E6	9.27E8	8.32E6	--	2.01E6
Cs 134	1.50E10	2.45E10	5.18E9	--	7.61E9	2.73E9	1.32E8
Cs 137	2.17E10	2.08E10	3.07E9	--	6.78E9	2.44E9	1.30E8
Ba 140	5.87E7	5.14E4	3.43E6	--	1.67E4	3.07E4	2.97E7
La 140	9.70	3.39	1.14	--	--	--	9.45E4
Ce 141	1.15E4	5.73E3	8.51E2	--	2.51E3	--	7.15E6
Ce 144	1.04E6	3.26E5	5.55E4	--	1.80E5	--	8.49E7
Nd 147	2.24E2	1.81E2	1.40E1	--	9.94E1	--	2.87E5
Ag 110m	1.33E8	8.97E7	7.17E7	--	1.67E8	--	1.07E10

*mrem/yr per $\mu Ci/m^3$.

TABLE D 3-11
DOSE AND DOSE RATE
R_i VALUES - COW MILK - TEEN
$\frac{m^2\text{-mrem/yr}}{uCi/sec}$

NUCLIDE	BONE	LIVER	T. BODY	THYROID	KIDNEY	LUNG	GI-LLI
H 3*	--	9.94E2	9.94E2	9.94E2	9.94E2	9.94E2	9.94E2
C 14*	6.70E5	1.34E5	1.34E5	1.34E5	1.34E5	1.35E5	1.34E5
Cr 51	--	--	2.58E4	1.44E4	5.66E3	3.69E4	4.34E6
Mn 54	--	9.01E6	1.79E6	--	2.69E6	--	1.85E7
Fe 55	2.78E7	1.97E7	4.59E6	--	--	1.25E7	8.52E6
Fe 59	2.81E7	6.57E7	2.54E7	--	--	2.07E7	1.55E8
Co 58	--	4.55E6	1.05E7	--	--	--	6.27E7
Co 60	--	1.86E7	4.19E7	--	--	--	2.42E8
Zn 65	1.34E9	4.65E9	2.17E9	--	2.97E9	--	1.97E9
Sr 89	1.47E9	--	4.21E7	--	--	--	1.75E8
Sr 90	4.45E10	--	1.10E10	--	--	--	1.25E9
Zr 95	9.34E2	2.95E2	2.03E2	--	4.33E2	--	6.80E5
Nb 95	1.86E5	1.03E5	5.69E4	--	1.00E5	--	4.42E8
Mo 99	--	2.24E7	4.27E6	--	5.12E7	--	4.01E7
I 131	1.34E8	1.88E8	1.01E8	5.49E10	3.24E8	--	3.72E7
I 133	1.66E6	2.82E6	8.59E5	3.93E8	4.94E6	--	2.13E6
Cs 134	6.49E9	1.53E10	7.08E9	--	4.85E9	1.85E9	1.90E8
Cs 137	9.02E9	1.20E10	4.18E9	--	4.08E9	1.59E9	1.71E8
Ba 140	2.43E7	2.98E4	1.57E6	--	1.01E4	2.00E4	3.75E7
La 140	4.05	1.99	5.30E-1	--	--	--	1.14E5
Ce 141	4.67E3	3.12E3	3.58E2	--	1.47E3	--	8.91E6
Ce 144	4.22E5	1.74E5	2.27E4	--	1.04E5	--	1.06E8
Nd 147	9.12E1	9.91E1	5.94E0	--	5.82E1	--	3.58E5
Ag 110m	6.13E7	5.80E7	3.53E7	--	1.11E8	--	1.63E10

*mrem/yr per $\mu Ci/m^3$.

TABLE D 3-12
DOSE AND DOSE RATE
R_i VALUES - COW MILK - ADULT
m^2-mrem/yr / uCi/sec

NUCLIDE	BONE	LIVER	T. BODY	THYROID	KIDNEY	LUNG	GI-LLI
H 3*	--	7.63E2	7.63E2	7.63E2	7.63E2	7.63E2	7.63E2
*C 14	3.63E5	7.26E4	7.26E4	7.26E4	7.26E4	7.26E4	7.26E4
Cr 51	--	--	1.48E4	8.85E3	3.26E3	1.96E4	3.72E6
Mn 54	--	5.41E6	1.03E6	--	1.61E6	--	1.66E7
Fe 55	1.57E7	1.08E7	2.52E6	--	--	6.04E6	6.21E6
Fe 59	1.61E7	3.79E7	1.45E7	--	--	1.06E7	1.26E8
Co 58	--	2.70E6	6.05E6	--	--	--	5.47E7
Co 60	--	1.10E7	2.42E7	--	--	--	2.06E8
Zn 65	8.71E8	2.77E9	1.25E9	--	1.85E9	--	1.75E9
Sr 89	7.99E8	--	2.29E7	--	--	--	1.28E8
Sr 90	3.15E10	--	7.74E9	--	--	--	9.11E8
Zr 95	5.34E2	1.71E2	1.16E2	--	2.69E2	--	5.43E5
Nb 95	1.09E5	6.07E4	3.27E4	--	6.00E4	--	3.69E8
Mo 99	--	1.24E7	2.36E6	--	2.81E7	--	2.87E7
I 131	7.41E7	1.06E8	6.08E7	3.47E10	1.82E8	--	2.80E7
I 133	9.09E5	1.58E6	4.82E5	2.32E8	2.76E6	--	1.42E6
Cs 134	3.74E9	8.89E9	7.27E9	--	2.88E9	9.55E8	1.56E8
Cs 137	4.97E9	6.80E9	4.46E9	--	2.31E9	7.68E8	1.32E8
Ba 140	1.35E7	1.69E4	8.83E5	--	5.75E3	9.69E3	2.77E7
La 140	2.26	1.14	3.01E-1	--	--	--	8.35E4
Ce 141	2.54E3	1.72E3	1.95E2	--	7.99E2	--	6.58E6
Ce 144	2.29E5	9.58E4	1.23E4	--	5.68E4	--	7.74E7
Nd 147	4.74E1	5.48E1	3.28E0	--	3.20E1	--	2.63E5
Ag 110m	3.71E7	3.43E7	2.04E7	--	6.74E7	--	1.40E10

*mrem/yr per $\mu Ci/m^3$.

TABLE D 3-13
DOSE AND DOSE RATE
R_i VALUES - GOAT MILK - INFANT
$\frac{m^2\text{-mrem/yr}}{uCi/sec}$

NUCLIDE	BONE	LIVER	T. BODY	THYROID	KIDNEY	LUNG	GI-LLI
H 3*	--	6.33E3	6.33E3	6.33E3	6.33E3	6.33E3	6.33E3
C 14*	3.23E6	6.89E5	6.89E5	6.89E5	6.89E5	6.89E5	6.89E5
Cr 51	--	--	1.00E4	6.56E3	1.43E3	1.28E4	2.93E5
Mn 54	--	3.01E6	6.82E5	--	6.67E5	--	1.11E6
Fe 55	1.10E6	7.08E5	1.89E5	--	--	3.46E5	8.98E4
Fe 59	1.59E6	2.78E6	1.09E6	--	--	8.21E5	1.33E6
Co 58	--	1.67E6	4.16E6	--	--	--	4.16E6
Co 60	--	7.08E6	1.67E7	--	--	--	1.68E7
Zn 65	4.24E8	1.45E9	6.70E8	--	7.04E8	--	1.23E9
Sr 89	1.48E10	--	4.24E8	--	--	--	3.04E8
Sr 90	1.72E11	--	4.38E10	--	--	--	2.15E9
Zr 95	4.66E2	1.13E2	8.04E1	--	1.22E2	--	5.65E4
Nb 95	9.42E4	3.88E4	2.24E4	--	2.78E4	--	3.27E7
Mo 99	--	1.27E7	2.47E6	--	1.89E7	--	4.17E6
I 131	8.17E8	9.63E8	4.23E8	3.16E11	1.12E9	--	3.44E7
I 133	1.02E7	1.49E7	4.36E6	2.71E9	1.75E7	--	2.52E6
Cs 134	7.23E10	1.35E11	1.36E10	--	3.47E10	1.42E10	3.66E8
Cs 137	1.04E11	1.22E11	8.63E9	--	3.27E10	1.32E10	3.81E8
Ba 140	1.45E7	1.45E4	7.48E5	--	3.44E3	8.91E3	3.56E6
La 140	2.430	9.59E-1	2.47E-1	--	--	--	1.13E4
Ce 141	2.74E3	1.67E3	1.96E2	--	5.14E2	--	8.62E5
Ce 144	1.79E5	7.32E4	1.00E4	--	2.96E4	--	1.03E7
Nd 147	5.32E1	5.47E1	3.35E0	--	2.11E1	--	3.46E4
Ag 110m	2.95E7	2.15E7	1.43E7	--	3.07E7	--	1.11E9

*mrem/yr per $\mu Ci/m^3$.

TABLE D 3-14
DOSE AND DOSE RATE
R_i VALUES - GOAT MILK - CHILD
m^2-mrem/yr
uCi/sec

NUCLIDE	BONE	LIVER	T. BODY	THYROID	KIDNEY	LUNG	GI-LLI
H 3*	--	4.17E3	4.17E3	4.17E3	4.17E3	4.17E3	4.17E3
C 14*	1.65E6	3.29E5	3.29E5	3.29E5	3.29E5	3.29E5	3.29E5
Cr 51	--	--	6.34E3	3.52E3	9.62E2	6.43E3	3.36E5
Mn 54	--	1.62E6	4.31E5	--	4.54E5	--	1.36E6
Fe 55	9.06E5	4.81E5	1.49E5	--	--	2.72E5	8.91E4
Fe 59	8.52E5	1.38E6	6.86E5	--	--	3.99E5	1.43E6
Co 58	--	8.35E5	2.56E6	--	--	--	4.87E6
Co 60	--	3.47E6	1.02E7	--	--	--	1.92E7
Zn 65	3.15E8	8.40E8	5.23E8	--	5.29E8	--	1.48E8
Sr 89	7.77E9	--	2.22E8	--	--	--	3.01E8
Sr 90	1.58E11	--	4.01E10	--	--	--	2.13E9
Zr 95	2.62E2	5.76E1	5.13E1	--	8.25E1	--	6.01E4
Nb 95	5.05E4	1.96E4	1.40E4	--	1.85E4	--	3.63E7
Mo 99	--	4.95E6	1.22E6	--	1.06E7	--	4.09E6
I 131	3.91E8	3.94E8	2.24E8	1.30E11	6.46E8	--	3.50E7
I 133	4.84E6	5.99E6	2.27E6	1.11E9	9.98E6	--	2.41E6
Cs 134	4.49E10	7.37E10	1.55E10	--	2.28E10	8.19E9	3.97E8
Cs 137	6.52E10	6.24E10	9.21E9	--	2.03E10	7.32E9	3.91E8
Ba 140	7.05E6	6.18E3	4.12E5	--	2.01E3	3.68E3	3.57E6
La 140	1.16	4.07E-1	1.37E-1	--	--	--	1.13E4
Ce 141	1.38E3	6.88E2	1.02E2	--	3.02E2	--	8.59E5
Ce 144	1.25E5	3.91E4	6.66E3	--	2.16E4	--	1.02E7
Nd 147	2.68E1	2.17E1	1.68E0	--	1.19E1	--	3.44E4
Ag 110m	1.60E7	1.08E7	8.60E6	--	2.00E7	--	1.28E9

*mrem/yr per $\mu Ci/m^3$.

TABLE D 3-15
DOSE AND DOSE RATE
R_i VALUES - GOAT MILK - TEEN
$\frac{m^2\text{-mrem/yr}}{uCi/sec}$

NUCLIDE	BONE	LIVER	T. BODY	THYROID	KIDNEY	LUNG	GI-LLI
H 3*	--	2.64E3	2.64E3	2.64E3	2.64E3	2.64E3	2.64E3
C 14*	6.70E5	1.34E5	1.34E5	1.34E5	1.34E5	1.35E5	1.34E5
Cr 51	--	--	3.11E3	1.73E3	6.82E2	4.44E3	5.23E5
Mn 54	--	1.08E6	2.15E5	--	3.23E5	--	2.22E6
Fe 55	3.61E5	2.56E5	5.97E4	--	--	1.62E5	1.11E5
Fe 59	3.67E5	8.57E5	3.31E5	--	--	2.70E5	2.03E6
Co 58	--	5.46E5	1.26E6	--	--	--	7.53E6
Co 60	--	2.23E6	5.03E6	--	--	--	2.91E7
Zn 65	1.61E8	5.58E8	2.60E8	--	3.57E8	--	2.36E8
Sr 89	3.14E9	--	8.99E7	--	--	--	3.74E8
Sr 90	9.36E10	--	2.31E10	--	--	--	2.63E9
Zr 95	1.13E2	3.56E1	2.45E1	--	5.23E1	--	8.22E4
Nb 95	2.23E4	1.24E4	6.82E3	--	1.20E4	--	5.30E7
Mo 99	--	2.72E6	5.19E5	--	6.23E6	--	4.87E6
I 131	1.61E8	2.26E8	1.21E8	6.59E10	3.89E8	--	4.47E7
I 133	1.99E6	3.38E6	1.03E6	4.72E8	5.93E6	--	2.56E6
Cs 134	1.95E10	4.58E10	2.13E10	--	1.46E10	5.56E9	5.70E8
Cs 137	2.71E10	3.60E10	1.25E10	--	1.23E10	4.76E9	5.12E8
Ba 140	2.92E6	3.58E3	1.88E5	--	1.21E3	2.41E3	4.50E6
La 140	4.86E-1	2.39E-1	6.36E-2	--	--	--	1.37E4
Ce 141	5.60E2	3.74E2	4.30E1	--	1.76E2	--	1.07E6
Ce 144	5.06E4	2.09E4	2.72E3	--	1.25E4	--	1.27E7
Nd 147	1.09E1	1.19E1	7.13E-1	--	6.99E0	--	4.29E4
Ag 110m	7.36E6	6.96E6	4.24E6	--	1.33E7	--	1.96E9

*mrem/yr per $\mu Ci/m^3$.

TABLE D 3-16
DOSE AND DOSE RATE
R_i VALUES - GOAT MILK - ADULT
$\frac{m^2\text{-mrem/yr}}{uCi/sec}$

NUCLIDE	BONE	LIVER	T. BODY	THYROID	KIDNEY	LUNG	GI-LLI
H 3*	--	2.03E3	2.03E3	2.03E3	2.03E3	2.03E3	2.03E3
C 14*	3.63E5	7.26E4	7.26E4	7.26E4	7.26E4	7.26E4	7.26E4
Cr 51	--	--	1.78E3	1.06E3	3.92E2	2.36E3	4.48E5
Mn 54	--	6.50E5	1.24E5	--	1.93E5	--	1.99E6
Fe 55	2.04E5	1.41E5	3.28E4	--	--	7.85E4	8.07E4
Fe 59	2.10E5	4.95E5	1.90E5	--	--	1.38E5	1.65E6
Co 58	--	3.25E5	7.27E5	--	--	--	6.58E6
Co 60	--	1.32E6	2.91E6	--	--	--	2.48E7
Zn 65	1.05E8	3.33E8	1.51E8	--	2.23E8	--	2.10E8
Sr 89	1.70E9	--	4.89E7	--	--	--	2.73E8
Sr 90	6.62E10	--	1.63E10	--	--	--	1.91E9
Zr 95	6.45E1	2.07E1	1.40E1	--	3.25E1	--	6.56E4
Nb 95	1.31E4	7.29E3	3.92E3	--	7.21E3	--	4.42E7
Mo 99	--	1.51E6	2.87E5	--	3.41E6	--	3.49E6
I 131	8.89E7	1.27E8	7.29E7	4.17E10	2.18E8	--	3.36E7
I 133	1.09E6	1.90E6	5.79E5	2.79E8	3.31E6	--	1.71E6
Cs 134	1.12E10	2.67E10	2.18E10	--	8.63E9	2.86E9	4.67E8
Cs 137	1.49E10	2.04E10	1.34E10	--	6.93E9	2.30E9	3.95E8
Ba 140	1.62E6	2.03E3	1.06E5	--	6.91E2	1.16E3	3.33E6
La 140	2.71E-1	1.36E-1	3.61E-2	--	--	--	1.00E4
Ce 141	3.06E2	2.07E2	2.34E1	--	9.60E1	--	7.90E5
Ce 144	2.75E4	1.15E4	1.48E3	--	6.82E3	--	9.30E6
Nd 147	5.69E0	6.57E0	3.93E-1	--	3.84E0	--	3.15E4
Ag 110m	4.45E6	4.12E6	2.45E6	--	8.09E6	--	1.68E9

*mrem/yr per $\mu Ci/m^3$.

TABLE D 3-17
DOSE AND DOSE RATE
R_i VALUES - COW MEAT - CHILD

$$\frac{m^2\text{-mrem/yr}}{uCi/sec}$$

NUCLIDE	BONE	LIVER	T. BODY	THYROID	KIDNEY	LUNG	GI-LLI
H 3*	--	2.34E2	2.34E2	2.34E2	2.34E2	2.34E2	2.34E2
C 14*	5.29E5	1.06E5	1.06E5	1.06E5	1.06E5	1.06E5	1.06E5
Cr 51	--	--	4.55E3	2.52E3	6.90E2	4.61E3	2.41E5
Mn 54	--	5.15E6	1.37E6	--	1.44E6	--	4.32E6
Fe 55	2.89E8	1.53E8	4.74E7	--	--	8.66E7	2.84E7
Fe 59	2.04E8	3.30E8	1.65E8	--	--	9.58E7	3.44E8
Co 58	--	9.41E6	2.88E7	--	--	--	5.49E7
Co 60	--	4.64E7	1.37E8	--	--	--	2.57E8
Zn 65	2.38E8	6.35E8	3.95E8	--	4.00E8	--	1.12E8
Sr 89	2.65E8	--	7.57E6	--	--	--	1.03E7
Sr 90	7.01E9	--	1.78E9	--	--	--	9.44E7
Zr 95	1.51E6	3.32E5	2.95E5	--	4.75E5	--	3.46E8
Nb 95	4.10E6	1.59E6	1.14E6	--	1.50E6	--	2.95E9
Mo 99	--	5.42E4	1.34E4	--	1.16E5	--	4.48E4
I 131	4.15E6	4.18E6	2.37E6	1.38E9	6.86E6	--	3.72E5
I 133	9.38E-2	1.16E-1	4.39E-2	2.15E1	1.93E-1	--	4.67E-2
Cs 134	6.09E8	1.00E9	2.11E8	--	3.10E8	1.11E8	5.39E6
Cs 137	8.99E8	8.60E8	1.27E8	--	2.80E8	1.01E8	5.39E6
Ba 140	2.20E7	1.93E4	1.28E6	--	6.27E3	1.15E4	1.11E7
La 140	2.80E-2	9.78E-3	3.30E-3	--	--	--	2.73E2
Ce 141	1.17E4	5.82E3	8.64E2	--	2.55E3	--	7.26E6
Ce 144	1.48E6	4.65E5	7.91E4	--	2.57E5	--	1.21E8
Nd 147	5.93E3	4.80E3	3.72E2	--	2.64E3	--	7.61E6
Ag 110m	5.62E6	3.79E6	3.03E6	--	7.05E6	--	4.52E8

*mrem/yr per $\mu Ci/m^3$.

TABLE D 3-18
DOSE AND DOSE RATE
R_i VALUES - COW MEAT - TEEN
$\frac{m^2\text{-mrem/yr}}{uCi/sec}$

NUCLIDE	BONE	LIVER	T. BODY	THYROID	KIDNEY	LUNG	GI-LLI
H 3*	--	1.94E2	1.94E2	1.94E2	1.94E2	1.94E2	1.94E2
C 14*	2.81E5	5.62E4	5.62E4	5.62E4	5.62E4	5.62E4	5.62E4
Cr 51	--	--	2.93E3	1.62E3	6.39E2	4.16E3	4.90E5
Mn 54	--	4.50E6	8.93E5	--	1.34E6	--	9.24E6
Fe 55	1.50E8	1.07E8	2.49E7	--	--	6.77E7	4.62E7
Fe 59	1.15E8	2.69E8	1.04E8	--	--	8.47E7	6.36E8
Co 58	--	8.05E6	1.86E7	--	--	--	1.11E8
Co 60	--	3.90E7	8.80E7	--	--	--	5.09E8
Zn 65	1.59E8	5.52E8	2.57E8	--	3.53E8	--	2.34E8
Sr 89	1.40E8	--	4.01E6	--	--	--	1.67E7
Sr 90	5.42E9	--	1.34E9	--	--	--	1.52E8
Zr 95	8.50E5	2.68E5	1.84E5	--	3.94E5	--	6.19E8
Nb 95	2.37E6	1.32E6	7.24E5	--	1.28E6	--	5.63E9
Mo 99	--	3.90E4	7.43E3	--	8.92E4	--	6.98E4
I 131	2.24E6	3.13E6	1.68E6	9.15E8	5.40E6	--	6.20E5
I 133	5.05E-2	8.57E-2	2.61E-2	1.20E1	1.50E-1	--	6.48E-2
Cs 134	3.46E8	8.13E8	3.77E8	--	2.58E8	9.87E7	1.01E7
Cs 137	4.88E8	6.49E8	2.26E8	--	2.21E8	8.58E7	9.24E6
Ba 140	1.19E7	1.46E4	7.68E5	--	4.95E3	9.81E3	1.84E7
La 140	1.53E-2	7.51E-3	2.00E-3	--	--	--	4.31E2
Ce 141	6.19E3	4.14E3	4.75E2	--	1.95E3	--	1.18E7
Ce 144	7.87E5	3.26E5	4.23E4	--	1.94E5	--	1.98E8
Nd 147	3.16E3	3.44E3	2.06E2	--	2.02E3	--	1.24E7
Ag 110m	3.39E6	3.20E6	1.95E7	--	6.13E6	--	9.01E8

*mrem/yr per $\mu Ci/m^3$.

TABLE D 3-19
DOSE AND DOSE RATE
R_i VALUES - COW MEAT - ADULT
m^2-mrem/yr / uCi/sec

NUCLIDE	BONE	LIVER	T. BODY	THYROID	KIDNEY	LUNG	GI-LLI
H 3*	--	3.25E2	3.25E2	3.25E2	3.25E2	3.25E2	3.25E2
C 14*	3.33E5	6.66E4	6.66E4	6.66E4	6.66E4	6.66E4	6.66E4
Cr 51	--	--	3.65E3	2.18E3	8.03E2	4.84E3	9.17E5
Mn 54	--	5.90E6	1.13E6	--	1.76E6	--	1.81E7
Fe 55	1.85E8	1.28E8	2.98E7	--	--	7.14E7	7.34E7
Fe 59	1.44E8	3.39E8	1.30E8	--	--	9.46E7	1.13E9
Co 58	--	1.04E7	2.34E7	--	--	--	2.12E8
Co 60	--	5.03E7	1.11E8	--	--	--	9.45E8
Zn 65	2.26E8	7.19E8	3.25E8	--	4.81E8	--	4.53E8
Sr 89	1.66E8	--	4.76E6	--	--	--	2.66E7
Sr 90	8.38E9	--	2.06E9	--	--	--	2.42E8
Zr 95	1.06E6	3.40E5	2.30E5	--	5.34E5	--	1.08E9
Nb 95	3.04E6	1.69E6	9.08E5	--	1.67E6	--	1.03E10
Mo 99	--	4.71E4	8.97E3	--	1.07E5	--	1.09E5
I 131	2.69E6	3.85E6	2.21E6	1.26E9	6.61E6	--	1.02E6
I 133	6.04E-2	1.05E-1	3.20E-2	1.54E1	1.83E-1	--	9.44E-2
Cs 134	4.35E8	1.03E9	8.45E8	--	3.35E8	1.11E8	1.81E7
Cs 137	5.88E8	8.04E8	5.26E8	--	2.73E8	9.07E7	1.56E7
Ba 140	1.44E7	1.81E4	9.44E5	--	6.15E3	1.04E4	2.97E7
La 140	1.86E-2	9.37E-3	2.48E-3	--	--	--	6.88E2
Ce 141	7.38E3	4.99E3	5.66E2	--	2.32E3	--	1.91E7
Ce 144	9.33E5	3.90E5	5.01E4	--	2.31E5	--	3.16E8
Nd 147	3.59E3	4.15E3	2.48E2	--	2.42E3	--	1.99E7
Ag 110m	4.48E6	4.14E6	2.46E6	--	8.13E6	--	1.69E9

*mrem/yr per $\mu Ci/m^3$.

TABLE D 3-20
DOSE AND DOSE RATE
R_i VALUES - VEGETATION - CHILD
$\frac{m^2\text{-mrem/yr}}{uCi/sec}$

NUCLIDE	BONE	LIVER	T. BODY	THYROID	KIDNEY	LUNG	GI-LLI
H 3*	--	4.01E3	4.01E3	4.01E3	4.01E3	4.01E3	4.01E3
C 14*	3.50E6	7.01E5	7.01E5	7.01E5	7.01E5	7.01E5	7.01E5
Cr 51	--	--	1.17E5	6.49E4	1.77E4	1.18E5	6.20E6
Mn 54	--	6.65E8	1.77E8	--	1.86E8	--	5.58E8
Fe 55	7.63E8	4.05E8	1.25E8	--	--	2.29E8	7.50E7
Fe 59	3.97E8	6.42E8	3.20E8	--	--	1.86E8	6.69E8
Co 58	--	6.45E7	1.97E8	--	--	--	3.76E8
Co 60	--	3.78E8	1.12E9	--	--	--	2.10E9
Zn 65	8.12E8	2.16E9	1.35E9	--	1.36E9	--	3.80E8
Sr 89	3.59E10	--	1.03E9	--	--	--	1.39E9
Sr 90	1.24E12	--	3.15E11	--	--	--	1.67E10
Zr 95	3.86E6	8.50E5	7.56E5	--	1.22E6	--	8.86E8
Nb 95	1.02E6	3.99E5	2.85E5	--	3.75E5	--	7.37E8
Mo 99	--	7.70E6	1.91E6	--	1.65E7	--	6.37E6
I 131	7.16E7	7.20E7	4.09E7	2.38E10	1.18E8	--	6.41E6
I 133	1.69E6	2.09E6	7.92E5	3.89E8	3.49E6	--	8.44E5
Cs 134	1.60E10	2.63E10	5.55E9	--	8.15E9	2.93E9	1.42E8
Cs 137	2.39E10	2.29E10	3.38E9	--	7.46E9	2.68E9	1.43E8
Ba 140	2.77E8	2.43E5	1.62E7	--	7.90E4	1.45E5	1.40E8
La 140	3.25E3	1.13E3	3.83E2	--	--	--	3.16E7
Ce 141	6.56E5	3.27E5	4.85E4	--	1.43E5	--	4.08E8
Ce 144	1.27E8	3.98E7	6.78E6	--	2.21E7	--	1.04E10
Nd 147	7.23E4	5.86E4	4.54E3	--	3.22E4	--	9.28E7
Ag 110m	3.21E7	2.17E7	1.73E7	--	4.04E7	--	2.58E9

*mrem/yr per $\mu Ci/m^3$.

TABLE D 3-21
DOSE AND DOSE RATE
R_i VALUES - VEGETATION - TEEN
$\frac{m^2\text{-mrem/yr}}{uCi/sec}$

NUCLIDE	BONE	LIVER	T. BODY	THYROID	KIDNEY	LUNG	GI-LLI
H 3*	--	2.59E3	2.59E3	2.59E3	2.59E3	2.59E3	2.59E3
C 14*	1.45E6	2.91E5	2.91E5	2.91E5	2.91E5	2.91E5	2.91E5
Cr 51	--	--	6.16E4	3.42E4	1.35E4	8.79E4	1.03E7
Mn 54	--	4.54E8	9.01E7	--	1.36E8	--	9.32E8
Fe 55	3.10E8	2.20E8	5.13E7	--	--	1.40E8	9.53E7
Fe 59	1.79E8	4.18E8	1.61E8	--	--	1.32E8	9.89E8
Co 58	--	4.37E7	1.01E8	--	--	--	6.02E8
Co 60	--	2.49E8	5.60E8	--	--	--	3.24E9
Zn 65	4.24E8	1.47E9	6.86E8	--	9.41E8	--	6.23E8
Sr 89	1.51E10	--	4.33E8	--	--	--	1.80E9
Sr 90	7.51E11	--	1.85E11	--	--	--	2.11E10
Zr 95	1.72E6	5.44E5	3.74E5	--	7.99E5	--	1.26E9
Nb 95	4.80E5	2.66E5	1.46E5	--	2.58E5	--	1.14E9
Mo 99	--	5.64E6	1.08E6	--	1.29E7	--	1.01E7
I 131	3.85E7	5.39E7	2.89E7	1.57E10	9.28E7	--	1.07E7
I 133	9.29E5	1.58E6	4.80E5	2.20E8	2.76E6	--	1.19E6
Cs 134	7.10E9	1.67E10	7.75E9	--	5.31E9	2.03E9	2.08E8
Cs 137	1.01E10	1.35E10	4.69E9	--	4.59E9	1.78E9	1.92E8
Ba 140	1.38E8	1.69E5	8.91E6	--	5.74E4	1.14E5	2.13E8
La 140	1.81E3	8.88E2	2.36E2	--	--	--	5.10E7
Ce 141	2.83E5	1.89E5	2.17E4	--	8.89E4	--	5.40E8
Ce 144	5.27E7	2.18E7	2.83E6	--	1.30E7	--	1.33E10
Nd 147	3.66E4	3.98E4	2.3863	--	2.34E4	--	1.44E8
Ag 110m	1.51E7	1.43E7	8.72E6	--	2.74E7	--	4.03E9

*mrem/yr per $\mu Ci/m^3$

TABLE D 3-22
DOSE AND DOSE RATE
R_i VALUES - VEGETATION - ADULT
$\frac{m^2\text{-mrem/yr}}{uCi/sec}$

NUCLIDE	BONE	LIVER	T. BODY	THYROID	KIDNEY	LUNG	GI-LLI
H 3*	--	2.26E3	2.26E3	2.26E3	2.26E3	2.26E3	2.26E3
C 14*	8.97E5	1.79E5	1.79E5	1.79E5	1.79E5	1.79E5	1.79E5
Cr 51	--	--	4.64E4	2.77E4	1.02E4	6.15E4	1.17E7
Mn 54	--	3.13E8	5.97E7	--	9.31E7	--	9.58E8
Fe 55	2.00E8	1.38E8	3.22E7	--	--	7.69E7	7.91E7
Fe 59	1.26E8	2.96E8	1.13E8	--	--	8.27E7	1.02E9
Co 58	--	3.08E7	6.90E7	--	--	--	6.24E8
Co 60	--	1.67E8	3.69E8	--	--	--	3.14E9
Zn 65	3.17E8	1.01E9	4.56E8	--	6.75E8	--	6.36E8
Sr 89	9.96E9	--	2.86E8	--	--	--	1.60E9
Sr 90	6.05E11	--	1.48E11	--	--	--	1.75E10
Zr 95	1.18E6	3.77E5	2.55E5	--	5.92E5	--	1.20E9
Nb 95	3.55E5	1.98E5	1.06E5	--	1.95E5	--	1.20E9
Mo 99	--	6.14E6	1.17E6	--	1.39E7	--	1.42E7
I 131	4.04E7	5.78E7	3.31E7	1.90E10	9.91E7	--	1.53E7
I 133	1.00E6	1.74E6	5.30E5	2.56E8	3.03E6	--	1.56E6
Cs 134	4.67E9	1.11E10	9.08E9	--	3.59E9	1.19E9	1.94E8
Cs 137	6.36E9	8.70E9	5.70E9	--	2.95E9	9.81E8	1.68E8
Ba 140	1.29E8	1.61E5	8.42E6	--	5.49E4	9.25E4	2.65E8
La 140	1.98E3	9.97E2	2.63E2	--	--	--	7.32E7
Ce 141	1.97E5	1.33E5	1.51E4	--	6.19E4	--	5.09E8
Ce 144	3.29E7	1.38E7	1.77E6	--	8.16E6	--	1.11E10
Nd 147	3.36E4	3.88E4	2.32E3	--	2.27E4	--	1.86E8
Ag 110m	1.05E7	9.75E6	5.79E6	--	1.92E7	--	3.98E9

*mrem/yr per $\mu Ci/m^3$

TABLE D 3-23
DISPERSION PARAMETERS AT CONTROLLING LOCATIONS[1]
X/Q, W_v and W_s VALUES

VENT	DIRECTION	DISTANCE (m)	X/Q (sec/m^3)	D/Q (m^{-2})
Site Boundary[2]	E	1,600	2.00 E-6	2.10E-9
Inhalation and Ground Plane	E (104°)	1,800	1.42E-7	2.90E-9
Cow Milk	ESE (130°)	4,300	4.11E-8	4.73E-10
Goat Milk[3]	SE (140°)	4,800	3.56E-08	5.32E-10
Meat Animal	E (114°)	2,600	1.17E-7	1.86E-9
Vegetation	E (96°)	2,900	1.04E-7	1.50E-9
STACK				
Site Boundary[2]	E	1,600	4.50E-8	6.00E-9
Inhalation and Ground Plane	E (109°)	1,700	8.48E-9	1.34E-9
Cow Milk	ESE (135°)	4,200	1.05E-8	3.64E-10
Goat Milk[3]	SE (140°)	4,800	2.90E-08	5.71E-10
Meat Animal	E (114°)	2,500	1.13E-8	1.15E-9
Vegetation	E (96°)	2,800	1.38E-8	9.42E-10

NOTE: Inhalation and Ground Plane are annual average values. Others are grazing season only.

[1] X/Q and D/Q values from NMP-2 ER-OLS.
[2] X/Q and D/Q from NMP-2 FES, NUREG-1085, May 1985, Table D-2.
[3] X/Q and D/Q from C.T. Main Data Report dated November 1985.

TABLE D 3-24
PARAMETERS FOR THE EVALUATION OF DOSES TO REAL MEMBERS
OF THE PUBLIC FROM GASEOUS AND LIQUID EFFLUENTS

Pathway	Parameter	Value	Reference
Fish	U (kg/yr) - adult	21	Reg. Guide 1.109 Table E-5
Fish	D_{aipj} (mrem/pCi)	Each Radionuclide	Reg. Guide 1.109 Table E-11
Shoreline	U (hr/yr)		
	- adult	67	Reg. Guide 1.109
	- teen	67	Assumed to be Same as Adult
Shoreline	D_{aipj} (mrem/hr per pCi/m^2)	Each Radionuclide	Reg. Guide 1.109 Table E-6
Inhalation	DFA_{ija}	Each Radionuclide	Reg. Guide 1.109 Table E-7

TABLE D 5.1
NINE MILE POINT NUCLEAR STATION
RADIOLOGICAL ENVIRONMENTAL MONITORING PROGRAM
SAMPLING LOCATIONS

Type of Sample	* Map Location	Collection Site (Env. Program No.)	Location
Radioiodine and Particulates (air)	1	Nine Mile Point Road North (R-1)	1.8 mi @ 88° E
Radioiodine and Particulates (air)	2	County Route 29 & Lake Road (R-2)	1.1 mi @ 104° ESE
Radioiodine and Particulates (air)	3	County Route 29 (R-3)	1.5 mi @ 132° SE
Radioiodine and Particulates (air)	4	Village of Lycoming, NY (R-4)	1.8 mi @ 143° SE
Radioiodine and Particulates (air)	5	Montario Point Road (R-5)	16.4 mi @ 42° NE
Direct Radiation (TLD)	6	North Shoreline Area (75)	0.1 mi @ 5° N
Direct Radiation (TLD)	7	North Shoreline Area (76)	0.1 mi @ 25° NNE
Direct Radiation (TLD)	8	North Shoreline Area (77)	0.2 mi @ 45° NE
Direct Radiation (TLD)	9	North Shoreline Area (23)	0.8 mi @ 70° ENE
Direct Radiation (TLD)	10	JAF East Boundary (78)	1.0 mi @ 90° E
Direct Radiation (TLD)	11	Route 29 (79)	1.1 mi @ 115° SE
Direct Radiation (TLD)	12	Route 29 (80)	1.4 mi @ 133° SE
Direct Radiation (TLD)	13	Miner Road (81)	1.6 mi @ 159° SSE
Direct Radiation (TLD)	14	Miner Road (82)	1.6 mi @ 181° S
Direct Radiation (TLD)	15	Lakeview Road (83)	1.2 mi @ 200° SSW
Direct Radiation (TLD)	16	Lakeview Road (84)	1.1 mi @ 225° SW
Direct Radiation (TLD)	17	Site Meteorological Tower (7)	0.7 mi @ 250° WSW
Direct Radiation (TLD)	18	Energy Information Center (18)	0.4 mi @ 265° W
Direct Radiation (TLD)	19	North Shoreline (85)	0.2 mi @ 294° WNW

* Map = See Figures D 5.1-1 and D 5.1-2.

TABLE D 5.1 (Cont'd)
NINE MILE POINT NUCLEAR STATION
RADIOLOGICAL ENVIRONMENTAL MONITORING PROGRAM
SAMPLING LOCATIONS

Type of Sample	* Map Location	Collection Site (Env. Program No.)	Location
Direct Radiation (TLD)	20	North Shoreline (86)	0.1 mi @ 315° NW
Direct Radiation (TLD)	21	North Shoreline (87)	0.1 mi @ 341° NNW
Direct Radiation (TLD)	22	Hickory Grove (88)	4.5 mi @ 97° E
Direct Radiation (TLD)	23	Leavitt Road (89)	4.1 mi @ 111° ESE
Direct Radiation (TLD)	24	Route 104 (90)	4.2 mi @ 135° SE
Direct Radiation (TLD)	25	Route 51A (91)	4.8 mi @ 156° SSE
Direct Radiation (TLD)	26	Maiden Lane Road (92)	4.4 mi @ 183° S
Direct Radiation (TLD)	27	County Route 53 (93)	4.4 mi @ 205° SSW
Direct Radiation (TLD)	28	County Route 1 (94)	4.7 mi @ 223° SW
Direct Radiation (TLD)	29	Lake Shoreline (95)	4.1 mi @ 237° WSW
Direct Radiation (TLD)	30	Phoenix, NY Control (49)	19.8 mi @ 163° S
Direct Radiation (TLD)	31	S. W. Oswego, Control (14)	12.6 mi @ 226° SW
Direct Radiation (TLD)	32	Scriba, NY (96)	3.6 mi @ 199° SSW
Direct Radiation (TLD)	33	Alcan Aluminum, Route 1A (58)	3.1 mi @ 220° SW
Direct Radiation (TLD)	34	Lycoming, NY (97)	1.8 mi @ 143° SE
Direct Radiation (TLD)	35	New Haven, NY (56)	5.3 mi @ 123° ESE
Direct Radiation (TLD)	36	W. Boundary, Bible Camp (15)	0.9 mi @ 237° WSW
Direct Radiation (TLD)	37	Lake Road (98)	1.2 mi @ 101° E

* Map = See Figures D 5.1-1 and D 5.1-2.

TABLE D 5.1 (Cont'd)
NINE MILE POINT NUCLEAR STATION
RADIOLOGICAL ENVIRONMENTAL MONITORING PROGRAM
SAMPLING LOCATIONS

Type of Sample	* Map Location	Collection Site (Env. Program No.)	Location
Surface Water	38	OSS Inlet Canal (NA)	7.6 mi @ 235° SW
Surface Water	39	JAFNPP Inlet Canal (NA)	0.5 mi @ 70° ENE
Shoreline Sediment	40	Sunset Bay Shoreline (NA)	1.5 mi @ 80° E
Fish	41	NMP Site Discharge Area (NA)	0.3 mi @ 315° NW (and/or)
Fish	42	NMP Site Discharge Area (NA)	0.6 mi @ 55° NE
Fish	43	Oswego Harbor Area (NA)	6.2 mi @ 235° SW
Milk	76	Milk Location #76	6.3 mi @ 120° ESE
Milk	64	Milk Location #55	9.0 mi @ 95° E
Milk	66	Milk Location #4	7.8 mi @ 113° ESE
Milk (CR)	77	Milk Location (Summerville)	13.9 mi @ 191° SSW
Food Product	48	Produce Location #6** (Bergenstock) (NA)	1.9 mi @ 141° SE
Food Product	49	Produce Location #1** (Culeton) (NA)	1.7 mi @ 96° E
Food Product	50	Produce Location #2** (Vitullo) (NA)	1.9 mi @ 101° E
Food Product	51	Produce Location #5** (C.S. Parkhurst) (NA)	1.5 mi @ 114° ESE
Food Product	52	Produce Location #3** (C. Narewski) (NA)	1.6 mi @ 84° E

* Map = See Figures D 5.1-1 and D 5.1-2.
** = Food Product Samples need not necessarily be collected from all listed locations. Collected samples will be of the highest calculated site average D/Q.
(NA) = Not applicable.
CR = Control Result (location).

TABLE D 5.1 (Cont'd)
NINE MILE POINT NUCLEAR STATION
RADIOLOGICAL ENVIRONMENTAL MONITORING PROGRAM
SAMPLING LOCATIONS

Type of Sample	* Map Location	Collection Site (Env. Program No.)	Location
Food Product	53	Produce Location #4** (P. Parkhurst) (NA)	2.1 mi @ 110° ESE
Food Product (CR)	54	Produce Location #7** (Mc Millen) (NA)	15.0 mi @ 223° SW
Food Product (CR)	55	Produce Location #8** (Denman) (NA)	12.6 mi @ 225° SW
Food Product	56	Produce Location #9** (O'Connor) (NA)	1.6 mi @ 171° S
Food Product	57	Produce Location #10** (C. Lawton) (NA)	2.2 mi @ 123° ESE
Food Product	58	Produce Location #11** (C. R. Parkhurst) (NA)	2.0 mi @ 112° ESE
Food Product	59	Produce Location #12** (Barton) (NA)	1.9 mi @ 115° ESE
Food Product (CR)	60	Produce Location #13** (Flack) (NA)	15.6 mi @ 225° W
Food Product	61	Produce Location #14** (Koeneke) (NA)	1.9 mi @ 95° E
Food Product	62	Produce Location #15** (Whaley) (NA)	1.7 mi @ 136° SE
Food Product	63	Produce Location #16** (Murray) (NA)	1.2 mi @ 207° SSW
Food Product	67	Produce Location #17** (Battles) (NA)	1.76 mi @ 97° E
Food Product	68	Product Location #18** (Kronenbitter)	1.52 mi @ 85° E

* Map = See Figures D 5.1-1 and D 5.1-2.
** = Food Product Samples need not necessarily be collected from all listed locations. Collected samples will be of the highest calculated site average D/Q.
(NA) = Not applicable.
CR = Control Result (location).

APPENDIX A

LIQUID DOSE FACTOR DERIVATION

Appendix A

Liquid Effluent Dose Factor Derivation, A_{iat}

A_{iat} (mrem/hr per uCi/ml) which embodies the dose conversion factors, pathway transfer factors (e.g., bioaccumulation factors), pathway usage factors, and dilution factors for the points of pathway origin takes into account the dose from ingestion of fish and drinking water and the sediment. The total body and organ dose conversion factors for each radionuclide will be used from Table E-11 of Regulatory Guide 1.109. To expedite time, the dose is calculated for a maximum individual instead of each age group. The maximum individual dose factor is a composite of the highest dose factor A_{iat} of each nuclide i age group a, and organ t, hence A_{1at}. It should be noted that the fish ingestion pathway is the most significant pathway for dose from liquid effluents. The water consumption pathway is included for consistency with NUREG 0133.

The equation for calculating dose contributions given in section 1.3 requires the use of the composite dose factor A_{it} for each nuclide, i. The dose factor equation for a fresh water site is:

$$A_{iat} = K_o\left[\left(\frac{U_w e^{-\lambda_i t_{pw}}}{D_w} + U_f BF_i e^{-\lambda_i t_{pf}}\right) DFL_{iat} + \frac{69.3 U_s W e^{-\lambda_i t_{ps}}}{D_s \lambda_i}\left(1 - e^{-\lambda_i t_b}\right) DFS_i\right]$$

Where:

A_{iat}	=	Is the dose factor for nuclide i, age group a, total body or organ t, for all appropriate pathways, (mrem/hr per uCi/ml)
K_o	=	Is the unit conversion factor, 1.14E5=1E6pCi/uCi x 1E3 ml/liter -:- 8760 hr/yr
U_w	=	Water consumption (liters/yr); from Table E-5 of Reg. Guide 1.109
U_f	=	Fish consumption (kg/yr); from Table E-5 of Reg. Guide 1.109
U_s	=	Sediment Shoreline Usage (hr/yr); from Table E-5 of Reg. Guide 1.109
BF_i	=	Bioaccumulation factor for nuclide, i, in fish, (pCi/kg per pCi/liter), from Table A-1 of Reg. Guide 1.109
DFL_{iat}	=	Dose conversion factor for age, nuclide, i, group a, total body or organ t, (mrem/pCi); from Table E-11 of Reg. Guide 1.109
DFS_i	=	Dose conversion factor for nuclide i and total body, from standing on contaminated ground (mrem/hr per pCi/m^2); from Table E-6 of Reg. Guide 1.109

D_w	=	Dilution factor from the near field area within one-quarter mile of the release point to the potable water intake for the adult water consumption. This is the Metropolitan Water Board, Onondaga County intake structure located west of the City of Oswego. (Unitless)
D_s	=	Dilution factor from the near field area within one quarter mile of the release point to the shoreline deposit (taken at the same point where we take environmental samples 1.5 miles; unitless)
69.3	=	conversion factor .693 x 100, 100 = K_c (liters/kg-hr)*40 kg/m^2*24 hr/day/.693 in liters/m^2-d, and K_c = transfer coefficient from water to sediment in liters/kg per hour.
t_{pw}, t_{pf}, t_{ps}	=	Average transit time required for each nuclide to reach the point of exposure for internal dose, it is the total time elapsed from release of the nuclides to either ingestion for water (w) and fish (f) or shoreline deposit (s), (hr)
t_b	=	Length of time the sediment is exposed to the contaminated water, nominally 15 yrs (approximate midpoint of facility operating life), (hrs).
λ_i	=	decay constant for nuclide i (hr^{-1})
W	=	Shore width factor (unitless) from Table A-2 of Reg. Guide 1.109

Example Calculation
For I-131 Thyroid Dose Factor for an Adult from a Radwaste liquid effluents release:

$(DFS)_i$	= 2.80E-9 mrem/hr per pCi/m^2		
$(DFL)_{iat}$	= 1.95E-3 mrem/pCi	t_{pw}	= 40 hrs. (w = water)
BF_i	= 15 pCi/kg per pCi/liter	t_{pf}	= 24 hrs. (f = fish)
U_f	= 21 kg/yr	t_b	= 1.314E5 hr (5.48E3 days)
D_w	= 62 unitless	U_w	= 730 liters/yr
D_s	= 17.8 unitless	K_o	= 1.14E5 (pCi/uCi)(ml/kg) / (hr/yr)
U_s	= 12 hr/yr		
W	= 0.3	λ_i	= 3.61E-3hr^{-1}
t_{ps}	= 7.3 hrs (s=Shoreline Sediment)		

These values will yield an A_{iat} Factor of 6.65E4 mrem-ml per uCi-hr as listed in Table D 2-2. It should be noted that only a limited number of nuclides are listed on Tables D 2-2 to D 2-5. These are the most common nuclides encountered in effluents. If a nuclide is detected for which a factor is not listed, then it will be calculated and included in a revision to the ODCM.

In addition, not all dose factors are used for the dose calculations. A maximum individual is used, which is a composite of the maximum dose factor of each age group for each organ as reflected in the applicable chemistry procedures.

APPENDIX B

PLUME SHINE DOSE FACTOR DERIVATION

Appendix B

For elevated releases the plume shine dose factors for gamma air (B_i) and whole body (V_i), are calculated using the finite plume model with an elevation above ground equal to the stack height. To calculate the plume shine factor for gamma whole body doses, the gamma air dose factor is adjusted for the attenuation of tissue, and the ratio of mass absorption coefficients between tissue and air. The equations are as follows:

Gamma Air

$$B_i = \sum_s \frac{K\mu_a E \; I_s}{R\Theta \; V_s}$$

Where:

K^1	=	conversion factor (see below for actual value).
μ_a	=	mass absorption coefficient (cm^2/g; air for B_i, tissue for V_i)
E	=	Energy of gamma ray per disintegration (Mev)
V_s	=	average wind speed for each stability class (s), m/s
R	=	downwind distance (site boundary, m)
Θ	=	sector width (radians)
s	=	subscript for stability class
I_s	=	I function = $I_1 + kI_2$ for each stability class. (unitless, see Regulatory Guide 1.109)
k^2	=	Fraction of the attenuated energy that is actually absorbed in air (see Regulatory Guide 1.109, see below for equation)

Whole Body

$$V_i = 1.11 S_F B_i e^{-\mu_a t_d}$$

Where:

t_d	=	tissue depth (g/cm^2)
S_F	=	shielding factor from structures (unitless)
1.11	=	Ratio of mass absorption coefficients between tissue and air.

Where all other parameters are defined above.

$$^{1}K = \text{conversion factor} = \frac{3.7\,E10\ \frac{dis}{Ci\text{-}sec}\ \ 1.6\,E\text{-}6\ \frac{erg}{Mev}}{1293\ \frac{g}{m^3}\ \ 100\ \frac{erg}{g\text{-}rad}} = .46$$

$$^{2}k = \frac{\mu - \mu_a}{\mu_a}$$

Where: μ = mass attenuation coefficient (cm^2/g; air for B_i, tissue for V_i)

μ_a = defined above

There are seven stability classes, A thru F. The percentage of the year that each stability class is taken from the U-2 FSAR. From this data, a plume shine dose factor is calculated for each stability class and each nuclide, multiplied by its respective fraction and then summed.

The wind speeds corresponding to each stability class are, also, taken from the Unit 2 FSAR. To confirm the accuracy of these values, an average of the 12 month wind speeds for 1985, 1986, 1987 and 1988 was compared to the average of the FSAR values. The average wind speed of the actual data is equal to 6.78 m/s, which compared favorably to the FSAR average wind speed equal to 6.77 m/s.

The average gamma energies were calculated using a weighted average of all gamma energies emitted from the nuclide. These energies were taken from the handbook "Radioactive Decay Data Tables", David C. Kocher.

The mass absorption (μ_a) and attenuation (μ) coefficients were calculated by multiplying the mass absorption (μ_a/ρ) and mass attenuation (μ/ρ) coefficients given in the Radiation Health Handbook by the air density equal to 1.293 E-3 g/cc or the tissue density of 1 g/cc where applicable. The tissue depth is $5 g/cm^2$ for the whole body.

The downwind distance is the site boundary.

SAMPLE CALCULATION

Ex. Kr-89 F STABILITY CLASS ONLY - Gamma Air

-DATA

$E = 2.22 MeV$ $\quad k = \frac{\mu - \mu_a}{\mu_a} = .871$ $\quad K = .46$

$\mu_a = 2.943\ E\text{-}3 m^{-1}$ $\quad V_F = 5.55$ m/sec

$\mu = 5.5064E\text{-}3 m^{-1}$ $\quad R = 1600m$

$\Theta = .39$

$\sigma_z = 19m$ vertical plume spread taken from "Introduction to Nuclear Engineering", John R. LaMarsh

-I Function

$U\sigma_z = .11$

$I_1 = .3$

$I_2 = .4$

$I = I_1 + kI_2 = .3 + (.871)(.4) = .65$

$$B_i = \frac{0.46 \left[\frac{\text{dis.}}{\text{Ci-sec}}\right] \frac{(\text{Mev/ergs})}{(\text{g-rad})} (2.943\text{E-}3\text{m}^{-1})(2.22\text{Mev})(.65)}{(\pi\square)(\text{g/m}^3)(5.55\ \text{m/s})(.39)(1600\text{m})}$$

$$= 3.18(-7)\ \frac{\text{rad/s}}{\text{Ci/s}}\ \frac{(3600\ \text{s/hr})(24\ \text{h/d})(365\ \text{d/y})(1\text{E}3\text{mrad/rad})}{\left(\frac{1\text{E}6\text{uCi}}{\text{Ci}}\right)}$$

$$= 1.00(-2)\ \frac{\text{mrad/yr}}{\text{uCi/sec}}$$

$$V_i = 1.11\ (.7) \left[(1\text{E-}2)\frac{\text{mrad/yr}}{\mu\text{Ci/sec}}\right] \left[e^{-(.0253\ \text{cm}^2/\text{g})(5\text{g/cm}^2)}\right]$$

$$= 6.85(-3)\ \frac{\text{mrad/yr}}{\mu\text{Ci/sec}}$$

Note: The above calculation is for the F stability class only. For Table D 3-2 and procedure values, a weighted fraction of each stability class was used to determine the B_i and V_i values.

APPENDIX C

DOSE PARAMETERS FOR IODINE 131 and 133, PARTICULATES AND TRITIUM

Appendix C

DOSE PARAMETERS FOR IODINE - 131 AND - 133, PARTICULATES AND TRITIUM

This appendix contains the methodology which was used to calculate the organ dose factors for I-131, I-133, particulates, and tritium. The dose factor, R_i, was calculated using the methodology outlined in NUREG-0133. The radioiodine and particulate DLCO 3.2.1 is applicable to the location in the unrestricted area where the combination of existing pathways and receptor age groups indicates the maximum potential exposure occurs, i.e., the critical receptor. Washout was calculated and determined to be negligible. R_i values have been calculated for the adult, teen, child and infant age groups for all pathways. However, for dose compliance calculations, a maximum individual is assumed that is a composite of highest dose factor of each age group for each organ and pathway. The methodology used to calculate these values follows:

C.1 Inhalation Pathway

$$R_i(I) = K'(BR)_a(DFA)_{ija}$$

where:

$R_i(I)$ = dose factor for each identified radionuclide i of the organ of interest (units = mrem/yr per uCi/m^3);

K' = a constant of unit conversion, 1E6 pCi/µCi

$(BR)_a$ = Breathing rate of the receptor of age group a, (units = m^3/yr);

$(DFA)_{ija}$ = The inhalation dose factor for nuclide i, organ j and age group a, and organ t (units = mrem/pCi).

The breathing rates $(BR)_a$ for the various age groups, as given in Table E-5 of Regulatory Guide 1.109 Revision 1, are tabulated below.

Age Group (a)	Breathing Rate (m^3/yr)
Infant	1400
Child	3700
Teen	8000
Adult	8000

Inhalation dose factors $(DFA)_{ija}$ for the various age groups are given in Tables E-7 through E-10 of Regulatory Guide 1.109 Revision 1.

C.2 Ground Plane Pathway

$$R_i(G) = \frac{K'K''(SF)(DFG)_i \quad (1-e^{-\lambda_i t})}{\lambda_i}$$

Where:

$R_i(G)$	=	Dose factor for the ground plane pathway for each identified radionuclide i for the organ of interest (units = m^2-mrem/yr per uCi/sec)
K'	=	A constant of unit conversion, 1E6 pCi/uCi
K"	=	A constant of unit conversion, 8760 hr/year
λ_i	=	The radiological decay constant for radionuclide i, (units = sec^{-1})
t	=	The exposure time, sec, 4.73E8 sec (15 years)
$(DFG)_i$	=	The ground plane dose conversion factor for radionuclide i; (units = mrem/hr per pCi/m^2)
SF	=	The shielding factor (dimensionless)

A shielding factor of 0.7 is discussed in Table E-15 of Regulatory Guide 1.109 Revision 1. A tabulation of DFG_i values is presented in Table E-6 of Regulatory Guide 1.109 Revision 1.

C.3 Grass-(Cow or Goat)-Milk Pathway

$$R_i(C) = \frac{K' Q_f U_{ap} F_m(r)(DFL)_{iat}}{(\lambda_i + \lambda_w)} \left[\frac{f_p f_s}{Y_p} + \frac{(1 - f_p f_s) e^{-\lambda_i t_h}}{Y_s} \right] e^{-\lambda_i t_f}$$

Where:

$R_i(C)$	=	Dose factor for the cow milk or goat milk pathway, for each identified radionuclide i for the organ of interest, (units = m2-mrem/yr per uCi/sec)
K'	=	A constant of unit conversion, 1E6 pCi/μCi
Q_f	=	The cow's or goat's feed consumption rate, (units = kg/day-wet weight)
U_{ap}	=	The receptor's milk consumption rate for age group a, (units = liters/yr)
Y_p	=	The agricultural productivity by unit area of pasture feed grass, (units = kg/m2)
Y_s	=	The agricultural productivity by unit area of stored feed, (units = kg/m2)
F_m	=	The stable element transfer coefficients, (units = pCi/liter per pCi/day)
r	=	Fraction of deposited activity retained on cow's feed grass
$(DFL)_{iat}$	=	The ingestion dose factor for nuclide i, age group a, and total body or organ t (units = mrem/pCi)
λ_i	=	The radiological decay constant for radionuclide i, (units=sec -1)
λ_w	=	The decay constant for removal of activity on leaf and plant surfaces by weathering equal to 5.73E-7 sec -1 (corresponding to a 14 day half-life)
t_f	=	The transport time from pasture to cow or goat, to milk, to receptor, (units = sec)
t_h	=	The transport time from pasture, to harvest, to cow or goat, to milk, to receptor (units = sec)
f_p	=	Fraction of the year that the cow or goat is on pasture (dimensionless)
f_s	=	Fraction of the cow feed that is pasture grass while the cow is on pasture (dimensionless)

Milk cattle and goats are considered to be fed from two potential sources, pasture grass and stored feeds. Following the development in Regulatory Guide 1.109 Revision 1, the value of f_s is considered unity in lieu of site specific information. The value of f_p is 0.5 based on 6 month grazing period. This value for f_p was obtained from the environmental group.

Table C-1 contains the appropriate values and their source in Regulatory Guide 1.109 Revision 1.

The concentration of tritium in milk is based on the airborne concentration rather than the deposition. Therefore, the $R_T(C)$ is based on X/Q:

$$R_T(C) = K'K''' F_m Q_f U_{ap} (DFL)_{iat} \; 0.75(0.5/H)$$

Where:

$R_T(C)$	=	Dose factor for the cow or goat milk pathway for tritium for the organ of interest, (units = mrem/yr per $\mu Ci/m^3$)
K'''	=	A constant of unit conversion, 1E3 g/kg
H	=	Absolute humidity of the atmosphere, (units = g/m^3)
0.75	=	The fraction of total feed that is water
0.5	=	The ratio of the specific activity of the feed grass water to the atmospheric water

Other values are given previously. A site specific value of H equal to 6.14 g/m^3 is used. This value was obtained from the environmental group using actual site data.

C.4 Grass-Cow-Meat Pathway

$$R_i(C) = \frac{K'Q_f U_{ap} F_f(r)(DFL)_{iat}}{(\lambda_i + \lambda_w)} \left[\frac{f_p f_s}{Y_p} + \frac{(1 - f_p f_s)e^{-\lambda_i t_h}}{Y_s} \right] e^{-\lambda_i t_f}$$

$R_i(M)$ = Dose factor for the meat ingestion pathway for radionuclide i for any organ of interest, (units = m^2-mrem/yr per µCi/sec)

F_f = The stable element transfer coefficients, (units = pCi/kg per pCi/day)

U_{ap} = The receptor's meat consumption rate for age group a, (units = kg/year)

t_h = The transport time from harvest, to cow, to receptor, (units = sec)

t_f = The transport time from pasture, to cow, to receptor, (units = sec)

All other terms remain the same as defined for the milk pathway. Table C-2 contains the values which were used in calculating $R_i(M)$.

The concentration of tritium in meat is based on airborne concentration rather than deposition. Therefore, the $R_T(M)$ is based on X/Q.

$$R_T(M) = K'K'''F_f Q_f U_{ap}(DFL)_{iat}\,[0.75(0.5/H)]$$

Where:

$R_T(M)$ = Dose factor for the meat ingestion pathway for tritium for any organ of interest, (units = mrem/yr per µCi/m^3)

All other terms are defined above.

C.5 Vegetation Pathway

The integrated concentration in vegetation consumed by man follows the expression developed for milk. Man is considered to consume two types of vegetation (fresh and stored) that differ only in the time period between harvest and consumption, therefore:

$$R_i(V) = K' \frac{r}{Y_v(\lambda_i + \lambda_w)} (DFL)_{iat} \left[U^L_a F_L e^{-\lambda_i t_L} + U^S_a F_g e^{-\lambda_i t_h} \right]$$

Where:

$R_i(V)$	=	Dose factor for vegetable pathway for radionuclide i for the organ of interest, (units = m^2-mrem/yr per μCi/sec)
K'	=	A constant of unit conversion, 1E6 pCi/μCi
U^L_a	=	The consumption rate of fresh leafy vegetation by the receptor in age group a, (units = kg/yr)
U^S_a	=	The consumption rate of stored vegetation by the receptor in age group a (units = kg/yr)
F_L	=	The fraction of the annual intake of fresh leafy vegetation grown locally
F_g	=	The fraction of the annual intake of stored vegetation grown locally
t_L	=	The average time between harvest of leafy vegetation and its consumption, (units = sec)
t_h	=	The average time between harvest of stored vegetation and its consumption, (units = sec)
Y_v	=	The vegetation areal P density, (units = kg/m^2)

All other factors have been defined previously.

Table C-3 presents the appropriate parameter values and their source in Regulatory Guide 1.109 Revision 1.

In lieu of site-specific data, values for F_L and F_g of, 1.0 and 0.76, respectively, were used in the calculation. These values were obtained from Table E-15 of Regulatory Guide 1.109 Revision 1.

The concentration of tritium in vegetation is based on the airborne concentration rather than the deposition. Therefore, the $R_T(V)$ is based on X/Q:

$$R_T(V) = K'K''' [U^L_a f_L + U^s_a f_g](DFL)_{iat} 0.75(0.5/H)$$

Where:

$R_T(V)$	=	dose factor for the vegetable pathway for tritium for any organ of interest, (units = mrem/yr per $\mu Ci/m^3$).

All other terms are defined in preceeding sections.

TABLE C-1

Parameters for Grass - (Cow or Goat) - Milk Pathways

Parameter	Value	Reference (Reg. Guide 1.109 Rev. 1)
Q_f (kg/day)	50 (cow) 6 (goat)	Table E-3 Table E-3
r	1.0 (radioiodines) 0.2 (particulates)	Table E-15 Table E-15
$(DFL)_{ija}$ (mrem/pCi)	Each radionuclide	Tables E-11 to E-14
F_m (pCi/liter per pCi/day)	Each stable element	Table E-1 (cow) Table E-2 (goat)
Y_s (kg/m^2)	2.0	Table E-15
Y_p (kg/m^2)	0.7	Table E-15
t_h (seconds)	7.78×10^6 (90 days)	Table E-15
t_f (seconds)	1.73×10^5 (2 days)	Table E-15
U_{ap} (liters/yr)	330 infant 330 child 400 teen 310 adult	Table E-5 Table E-5 Table E-5 Table E-5

TABLE C-2

Parameters for the Grass-Cow-Meat Pathway

Parameter	Value	Reference (Reg. Guide 1.109 Rev. 1)
r	1.0 (radioiodines) 0.2 (particulates)	Table E-15 Table E-15
F_f (pCi/kg per pCi/day)	Each stable element	Table E-1
U_{ap} (kg/yr)	0 infant 41 child 65 teen 110 adult	Table E-5 Table E-5 Table E-5 Table E-5
$(DFL)_{ija}$ (mrem/pCi)	Each radionuclide	Tables E-11 to E-14
Y_p (kg/m^2)	0.7	Table E-15
Y_s (kg/m^2)	2.0	Table E-15
t_h (seconds)	7.78E6 (90 days)	Table E-15
t_f (seconds)	1.73E6 (20 days)	Table E-15
Q_f (kg/day)	50	Table E-3

TABLE C-3

Parameters for the Vegetable Pathway

Parameter	Value	Reference (Reg. Guide 1.109 Rev. 1)
r (dimensionless)	1.0 (radioiodines)	Table E-1
	0.2 (particulates)	Table E-1
$(DFL)_{ija}$ (mrem/pCi)	Each radionuclide	Tables E-11 to E-14
$U^L)_a$ (kg/yr) - infant	0	Table E-5
- child	26	Table E-5
- teen	42	Table E-5
- adult	64	Table E-5
$U^S)_a$ (kg/yr) - infant	0	Table E-5
- child	520	Table E-5
- teen	630	Table E-5
- adult	520	Table E-5
t_L (seconds)	8.6E4 (1 day)	Table E-15
t_h (seconds)	5.18E6 (60 days)	Table E-15
Y_v (kg/m^2)	2.0	Table E-15

APPENDIX D

DIAGRAMS OF LIQUID AND GASEOUS TREATMENT SYSTEMS AND MONITORING SYSTEMS

Liquid Radwaste Treatment System Diagrams

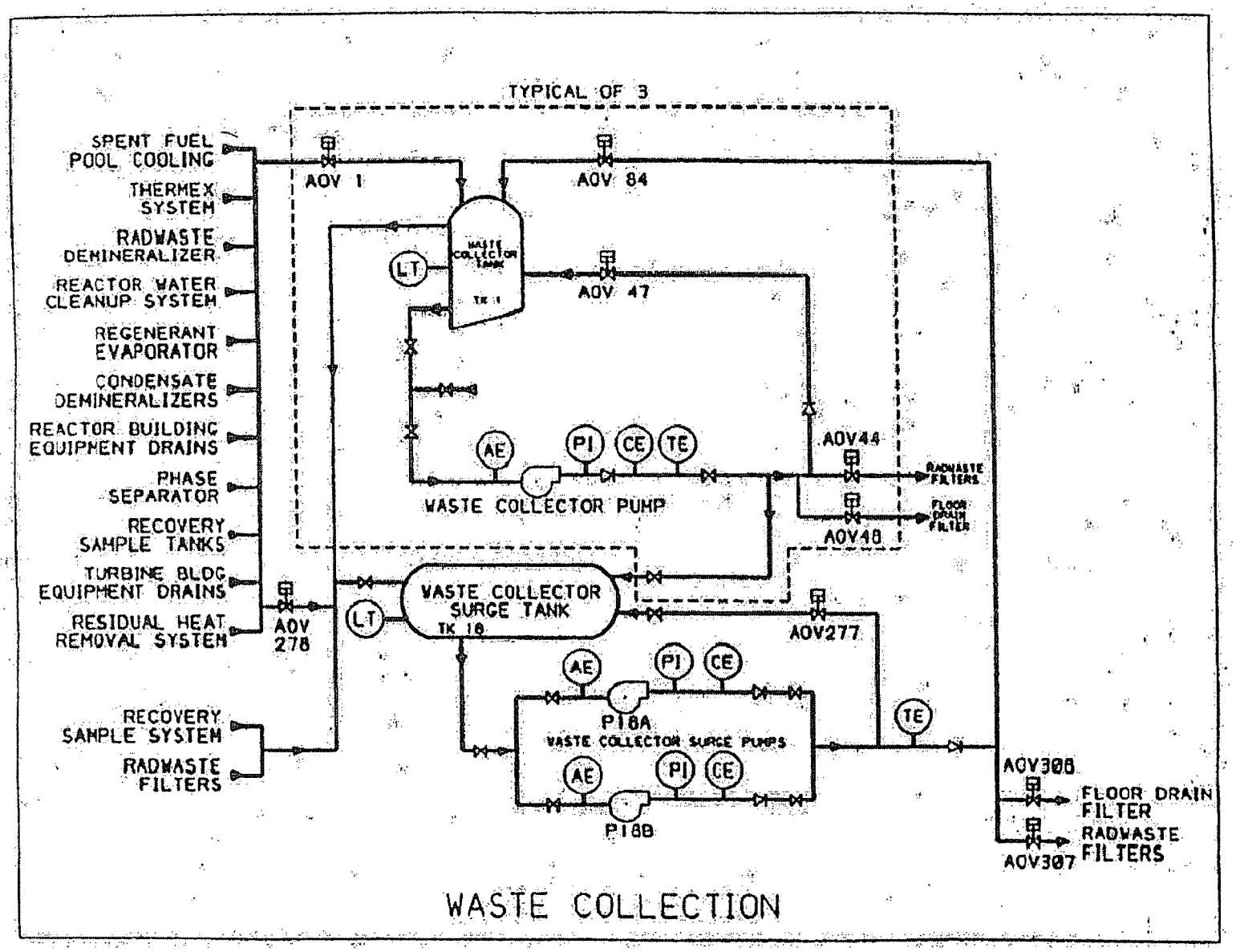

WASTE COLLECTION

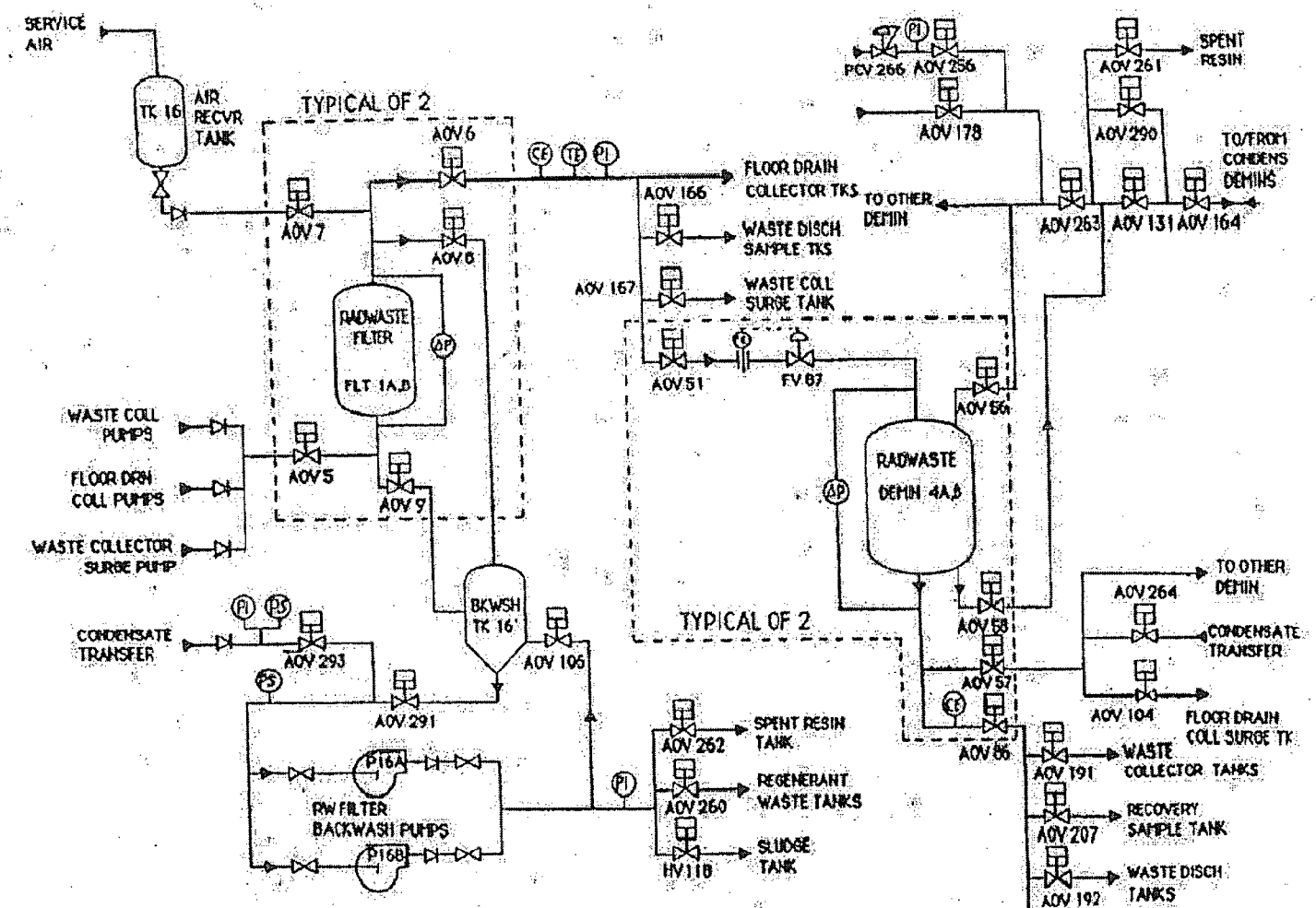

WASTE COLLECTOR TREATMENT SYSTEM

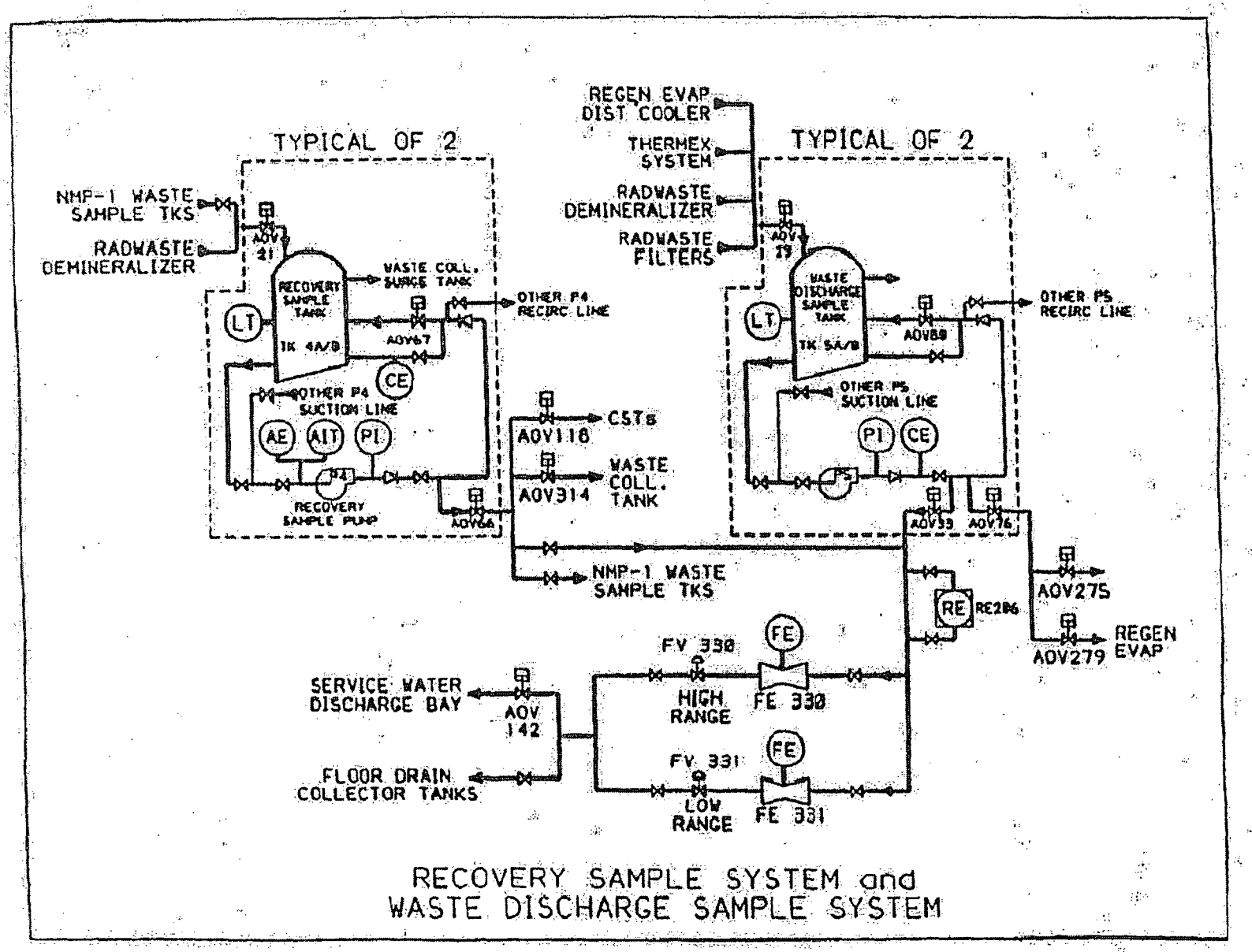

RECOVERY SAMPLE SYSTEM and
WASTE DISCHARGE SAMPLE SYSTEM

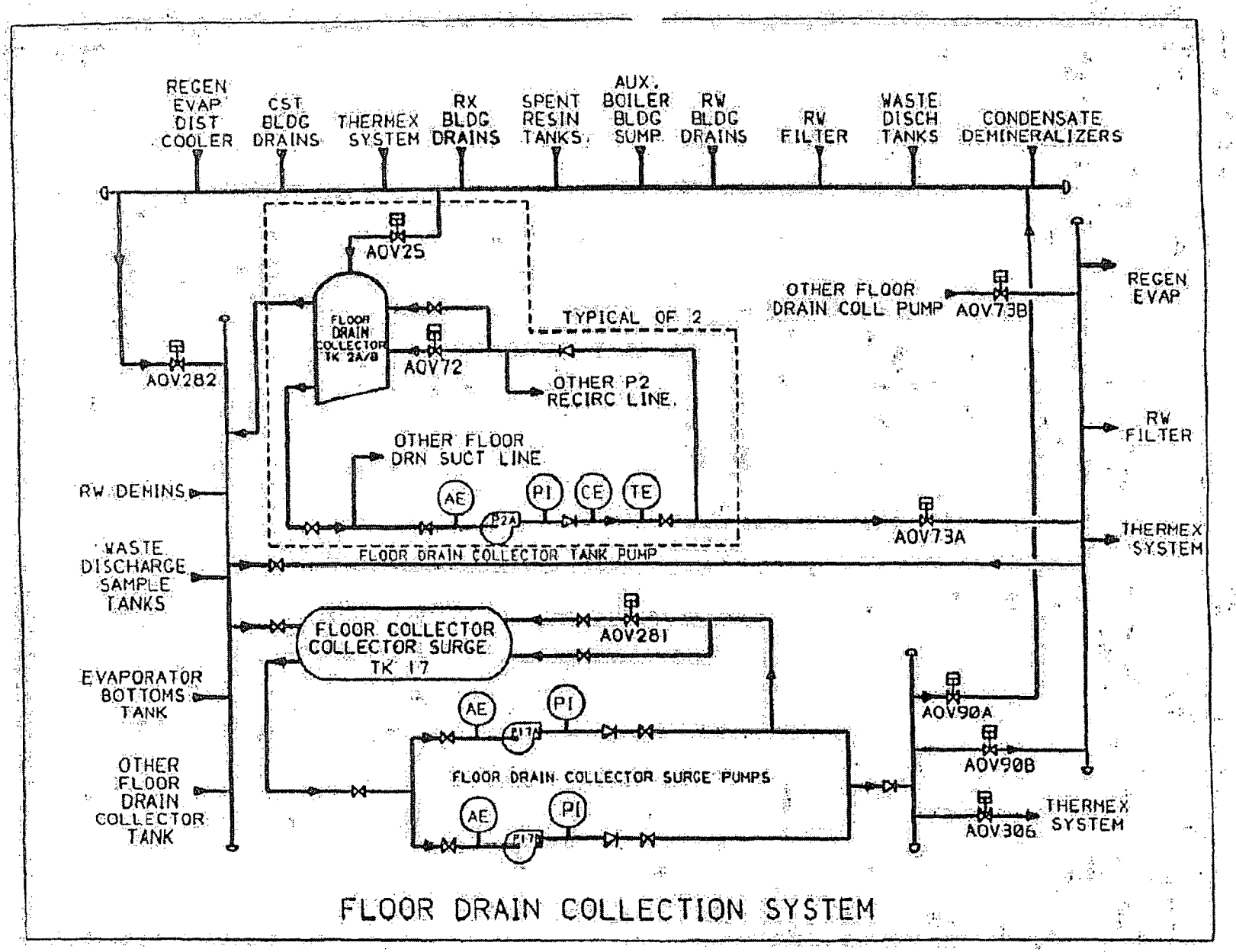

FLOOR DRAIN COLLECTION SYSTEM

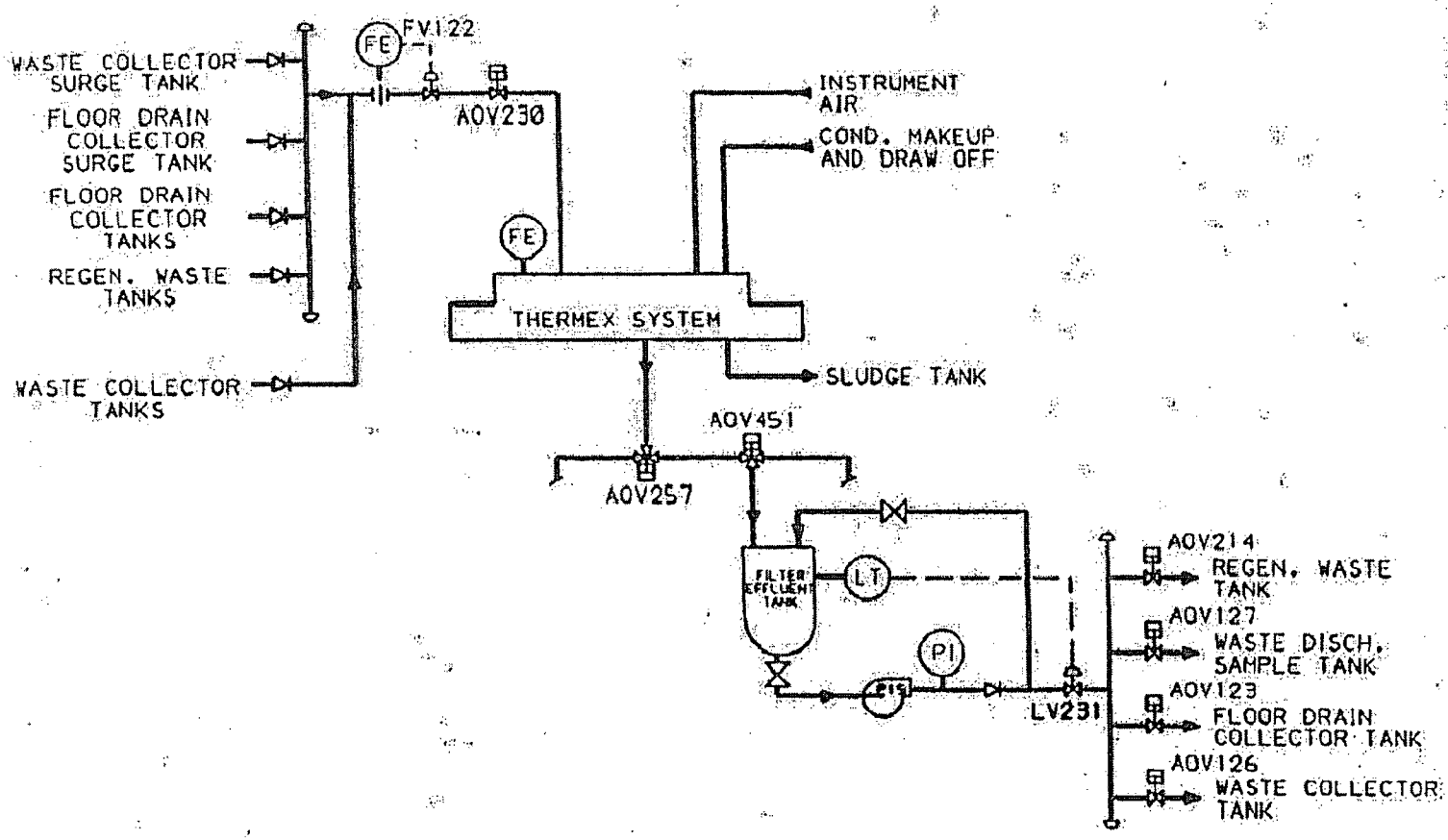

FLOOR DRAIN FILTER SYSTEM

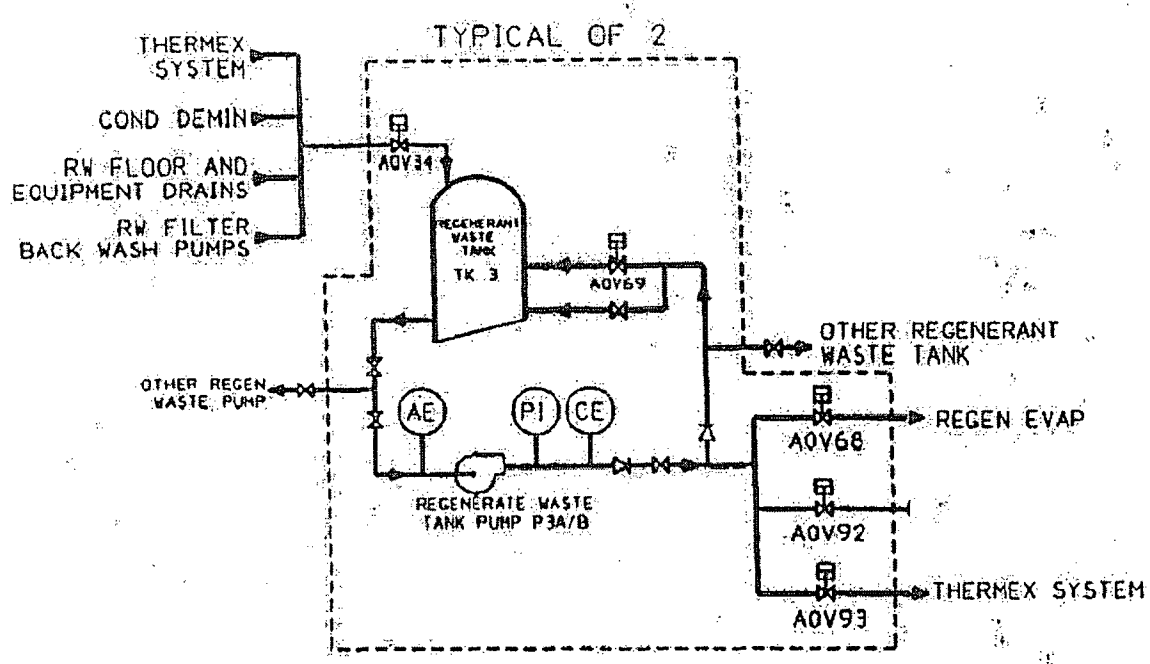

REGENERANT WASTE SYSTEM

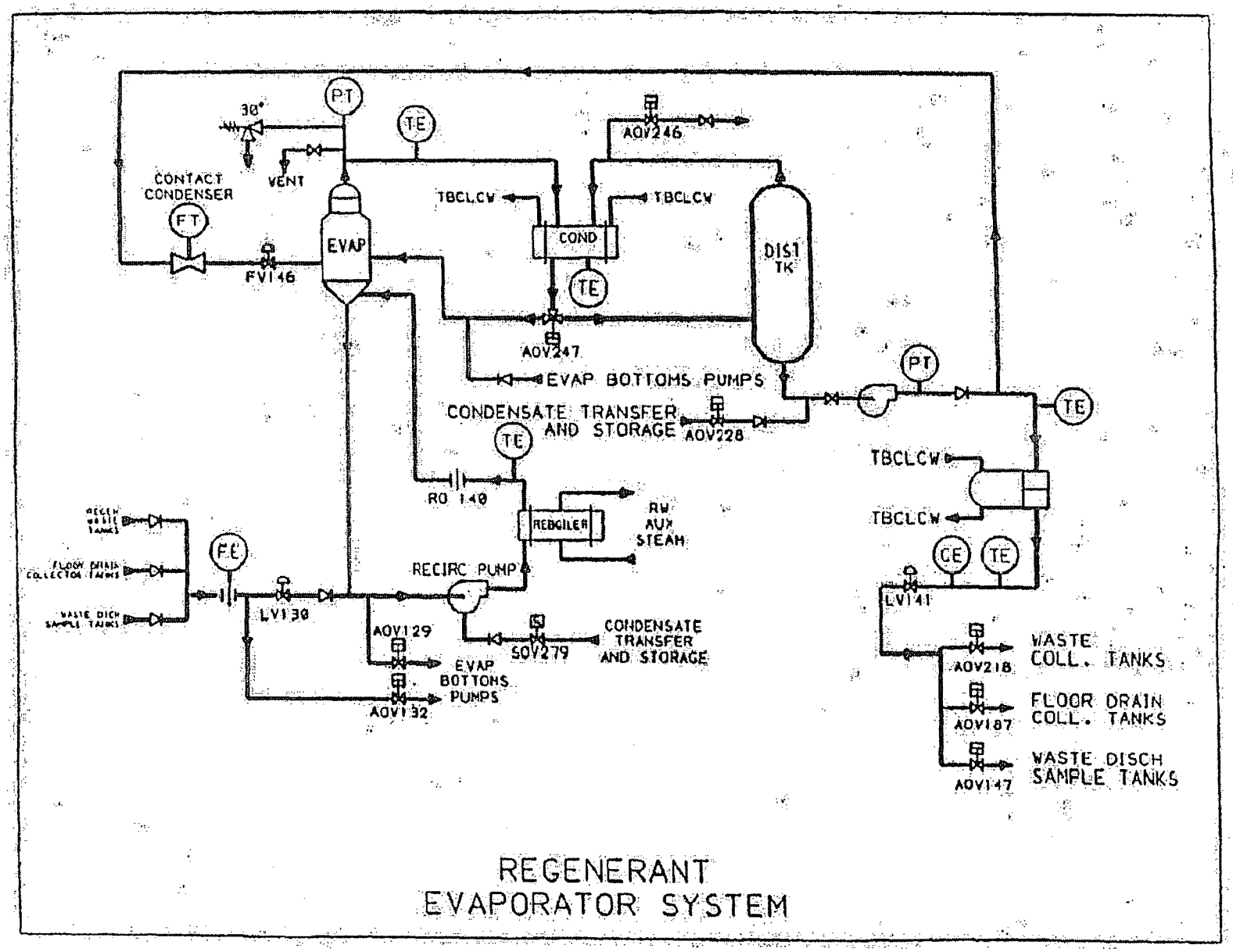

REGENERANT
EVAPORATOR SYSTEM

Gaseous Treatment System Diagrams

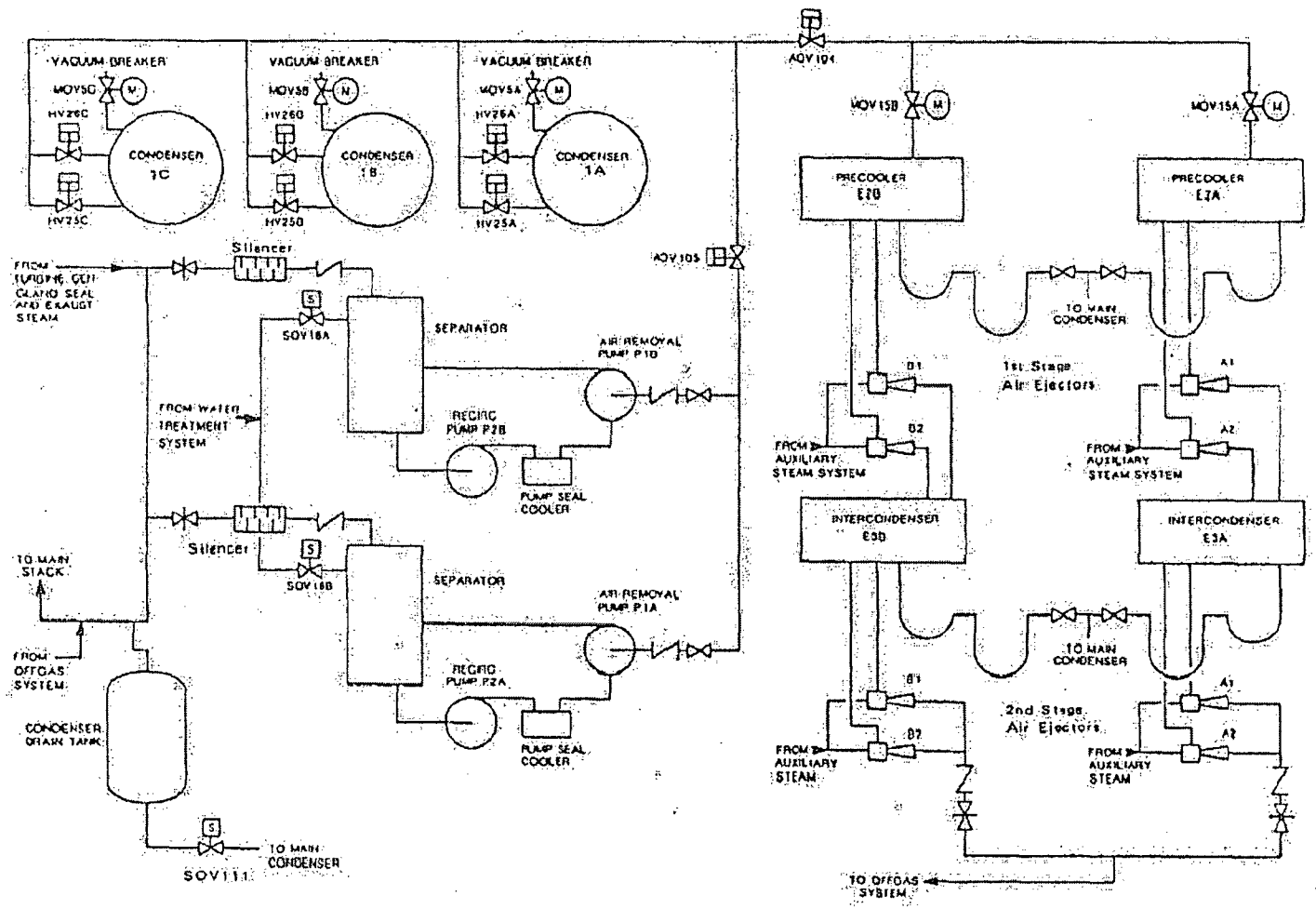

Title: CONDENSER AIR REMOVAL SYSTEM

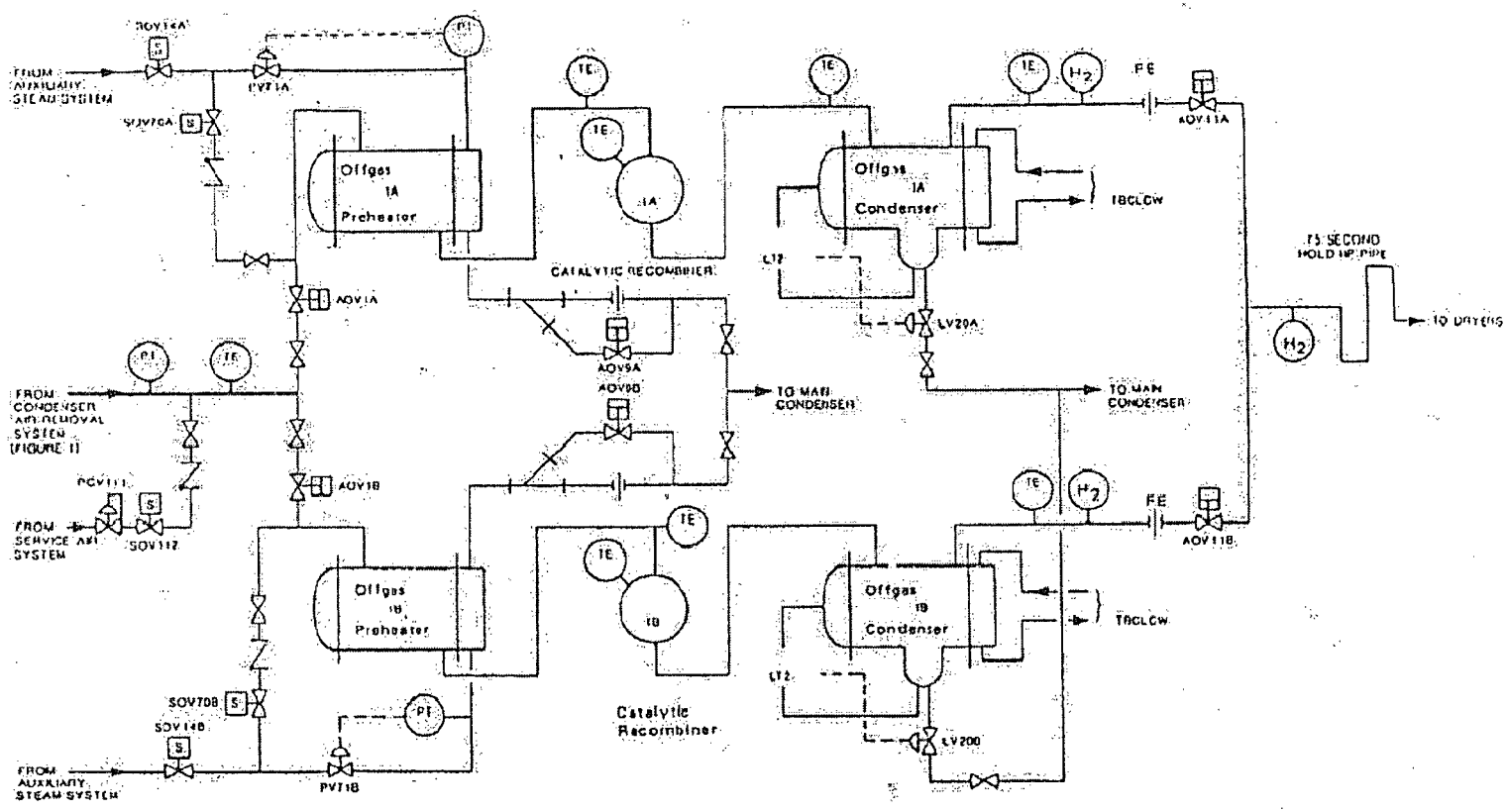

Title:
OFFGAS RECOMBINERS

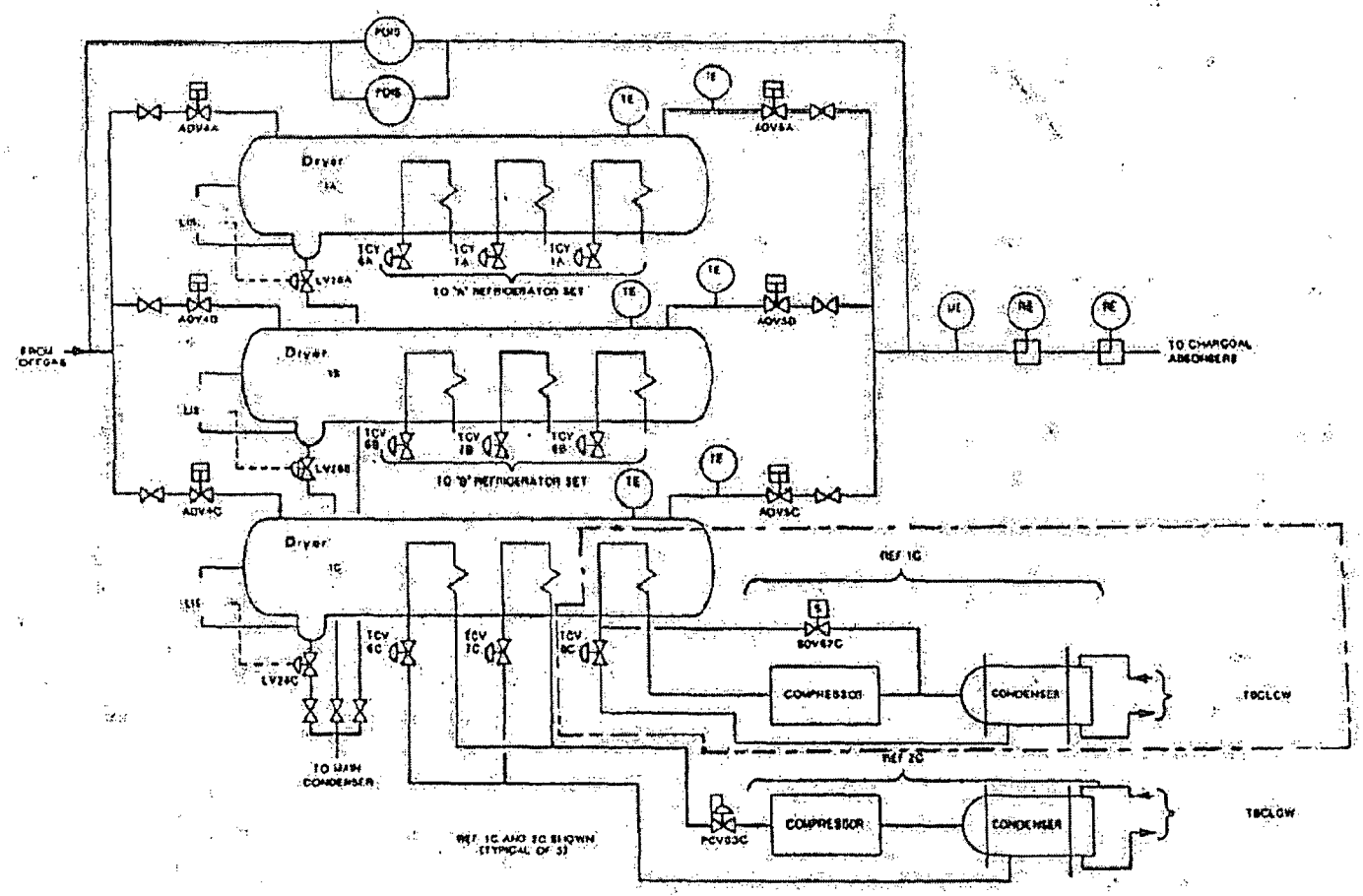

ALL LINES AND EQUIPMENT LOCATED INSIDE THIS BOUNDARY TO BE ABANDONED IN PLACE

Title: OFFGAS DRYERS

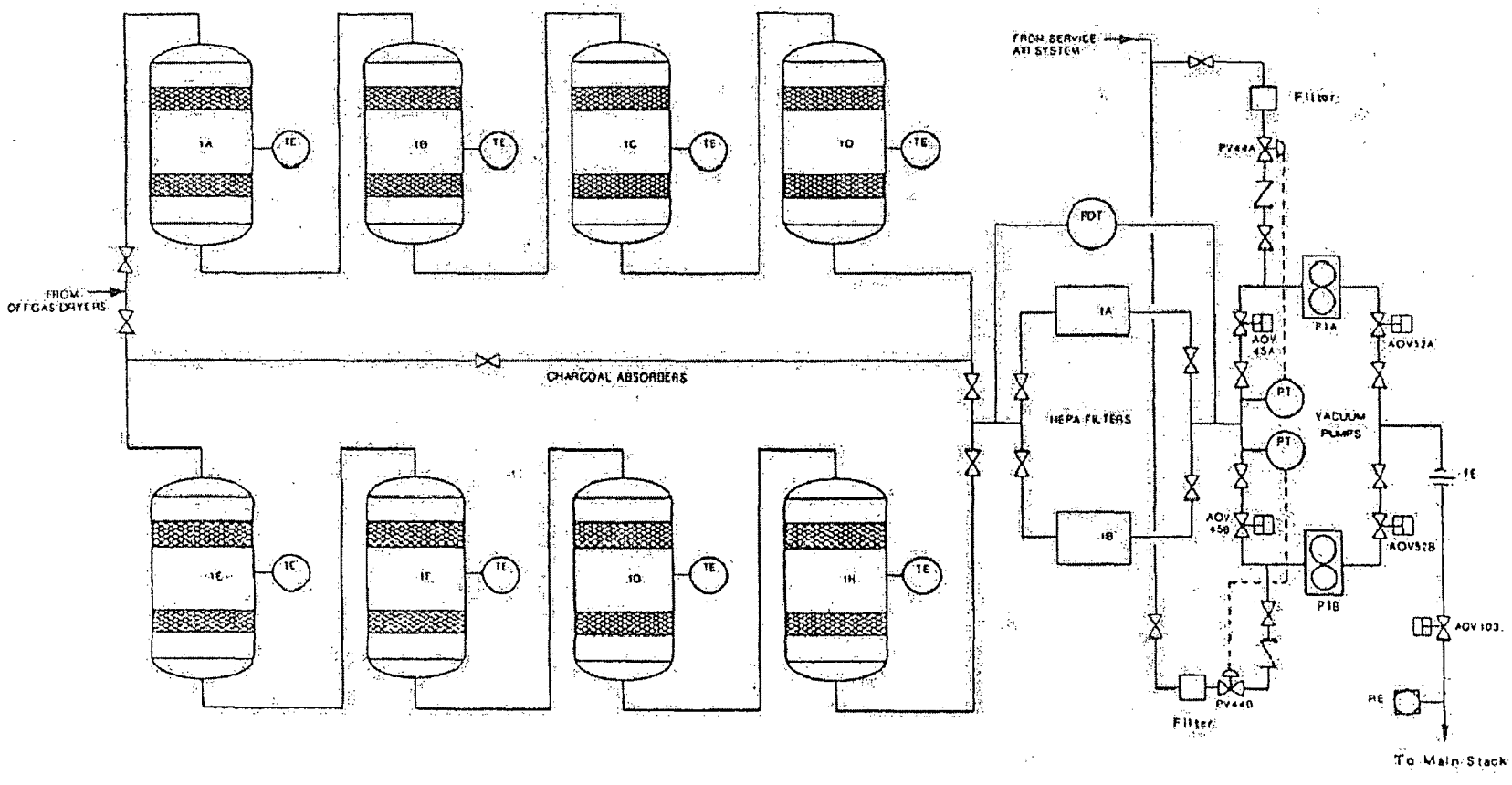

Title: OFFGAS SYSTEM CHARCOAL ABSORBERS

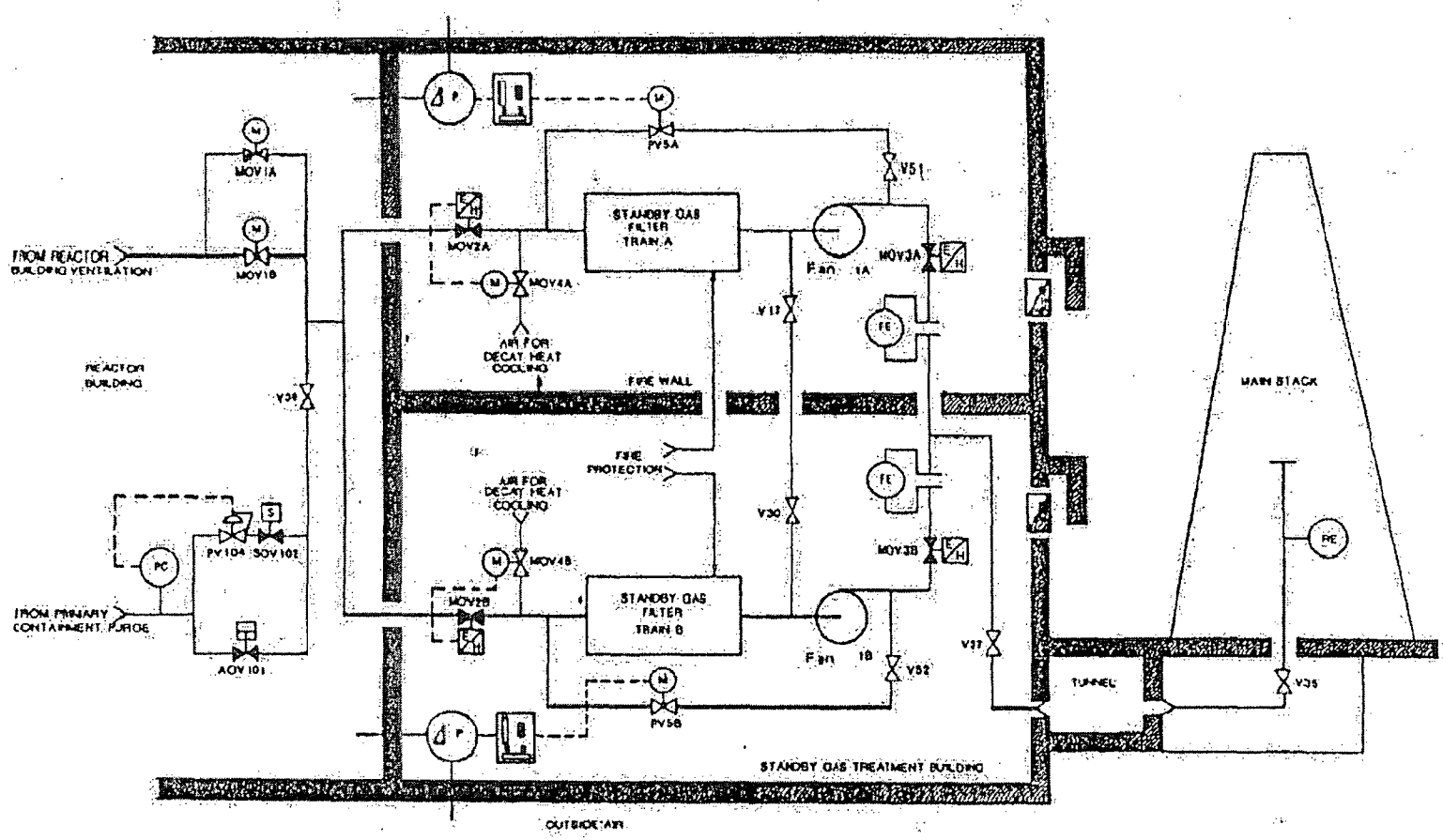

Title: STANDBY GAS TREATMENT SYSTEM

Liquid Radiation Monitoring Diagrams

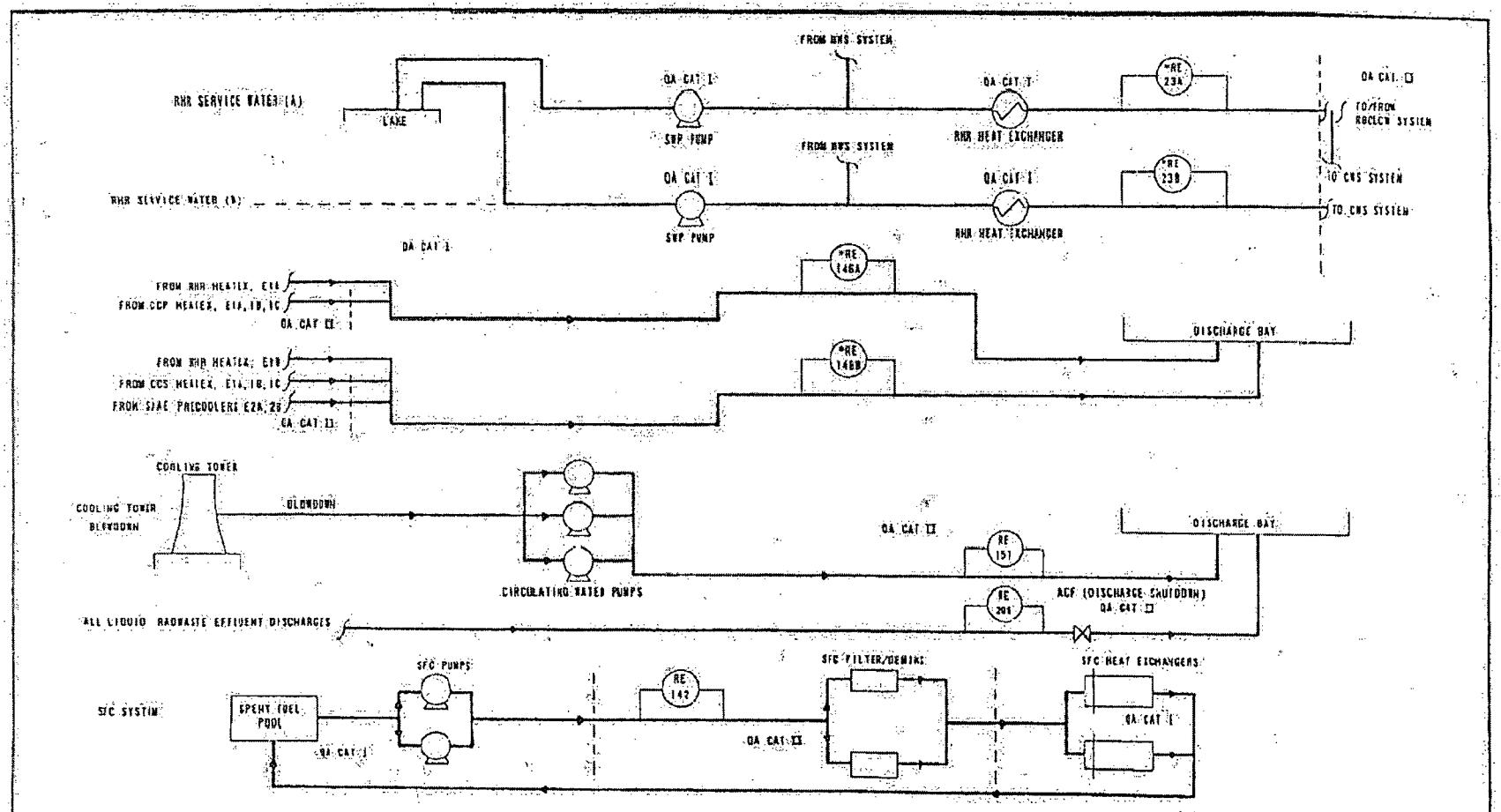

LIQUID RADIATION MONITORING
SHEET 2 OF 2

NIAGARA MOHAWK POWER CORPORATION
NINE MILE POINT-UNIT 2
FINAL SAFETY ANALYSIS REPORT

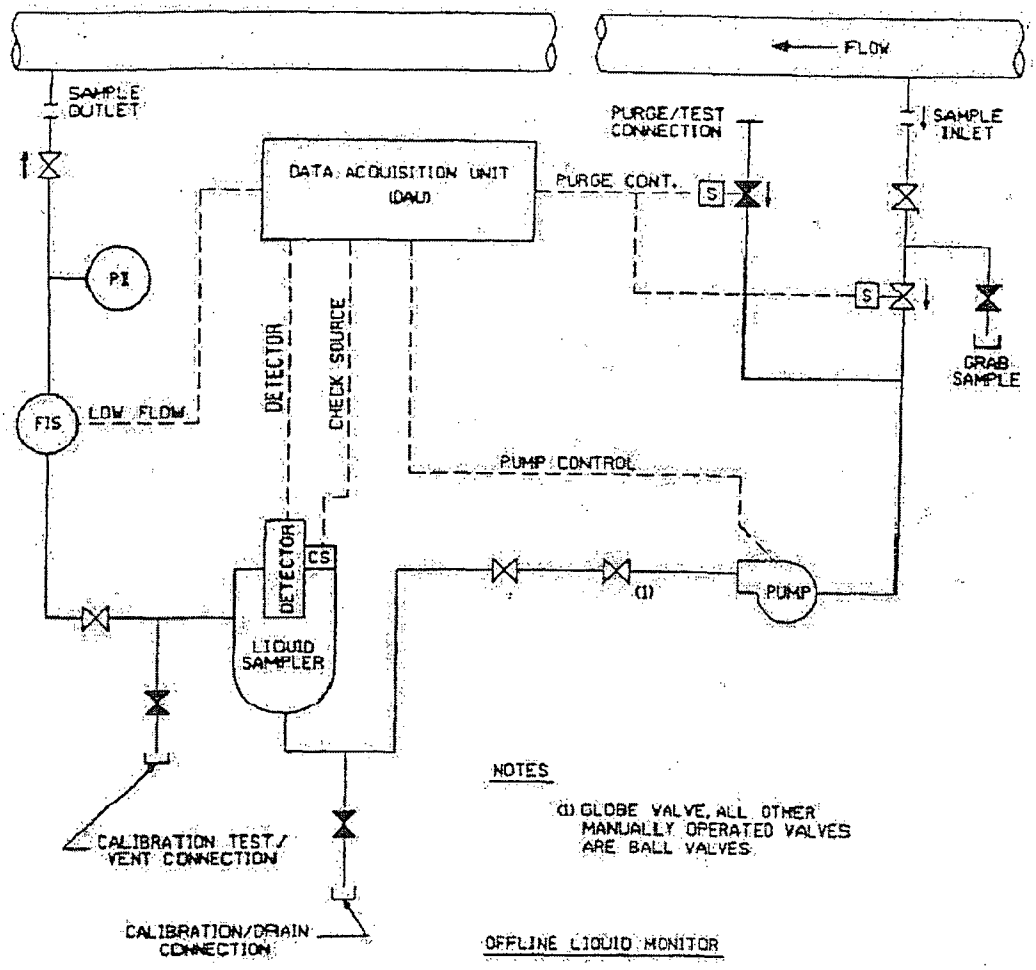

NOTES

(1) GLOBE VALVE, ALL OTHER MANUALLY OPERATED VALVES ARE BALL VALVES.

OFFLINE LIQUID MONITOR

2CCP-CAB116
2CCS-CAB152
2CWS-CAB157

LEGEND

- PI — PRESSURE INDICATOR
- FIS — FLOW INDICATING SW.
- S — SOLENOID OPERATED SW.
- NORMALLY CLOSED VALVE
- NORMALLY OPEN VALVE

OFF-LINE LIQUID MONITOR

NIAGARA MOHAWK POWER CORPORATION
NINE MILE POINT-UNIT 2
UPDATED SAFETY ANALYSIS REPORT

II 100

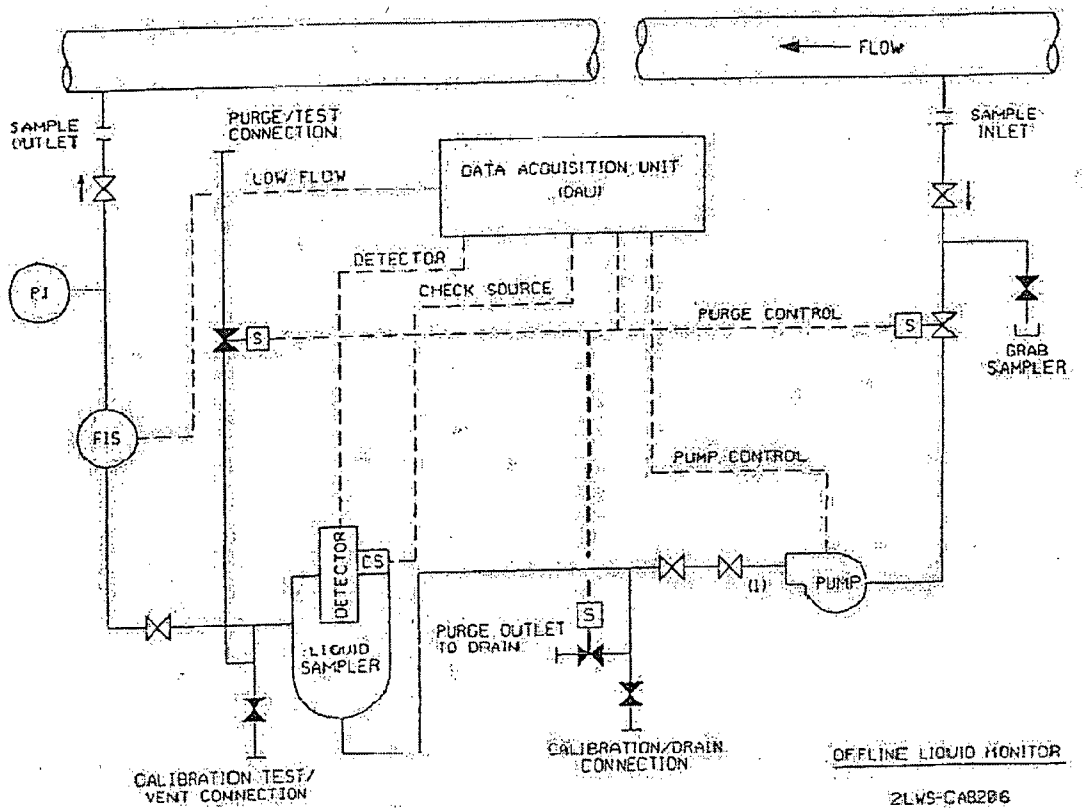

LEGEND

- PI — PRESSURE INDICATOR
- FIS — FLOW INDICATING SW.
- S — SOLENOID OPERATED SW.
- NORMALLY CLOSED VALVE
- NORMALLY OPEN VALVE

NOTES

(1) GLOBE VALVE. ALL OTHER MANUALLY OPERATED VALVES ARE BALL VALVES

OFF-LINE LIQUID MONITOR

NIAGARA MOHAWK POWER CORPORATION
NINE MILE POINT-UNIT 2
UPDATED SAFETY ANALYSIS REPORT

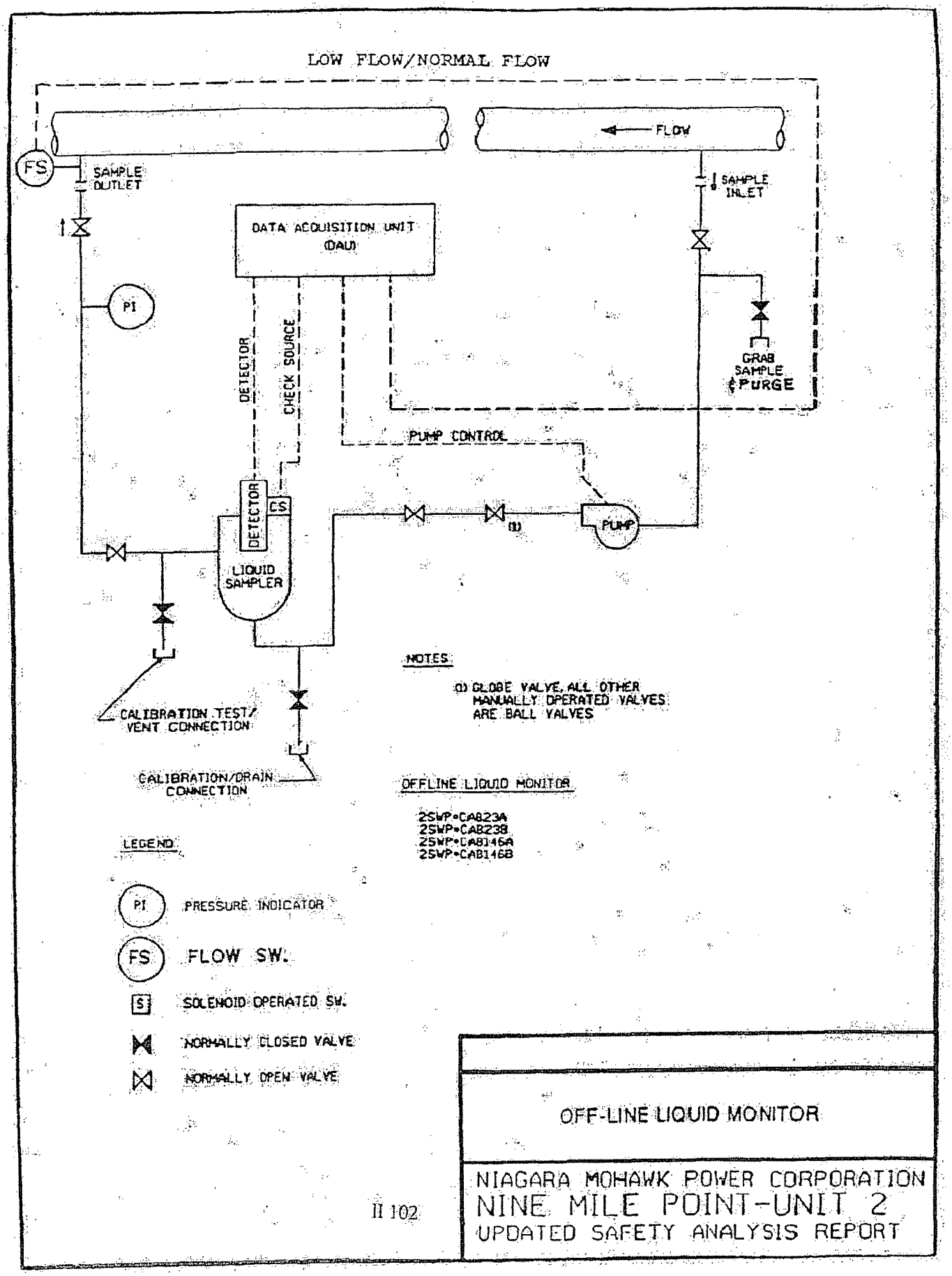
LOW FLOW/NORMAL FLOW
FLOW
FS
SAMPLE OUTLET
SAMPLE INLET
DATA ACQUISITION UNIT (DAU)
PI
DETECTOR
CHECK SOURCE
GRAB SAMPLE & PURGE
PUMP CONTROL
DETECTOR
CS
LIQUID SAMPLER
(1)
PUMP
CALIBRATION TEST/ VENT CONNECTION
CALIBRATION/DRAIN CONNECTION
NOTES
(1) GLOBE VALVE, ALL OTHER MANUALLY OPERATED VALVES ARE BALL VALVES
OFFLINE LIQUID MONITOR
2SWP*CA823A
2SWP*CA823B
2SWP*CA8146A
2SWP*CA8146B
LEGEND
PI PRESSURE INDICATOR
FS FLOW SW.
S SOLENOID OPERATED SW.
NORMALLY CLOSED VALVE
NORMALLY OPEN VALVE
OFF-LINE LIQUID MONITOR
NIAGARA MOHAWK POWER CORPORATION
NINE MILE POINT-UNIT 2
UPDATED SAFETY ANALYSIS REPORT

Gaseous Effluent Monitoring System Diagrams

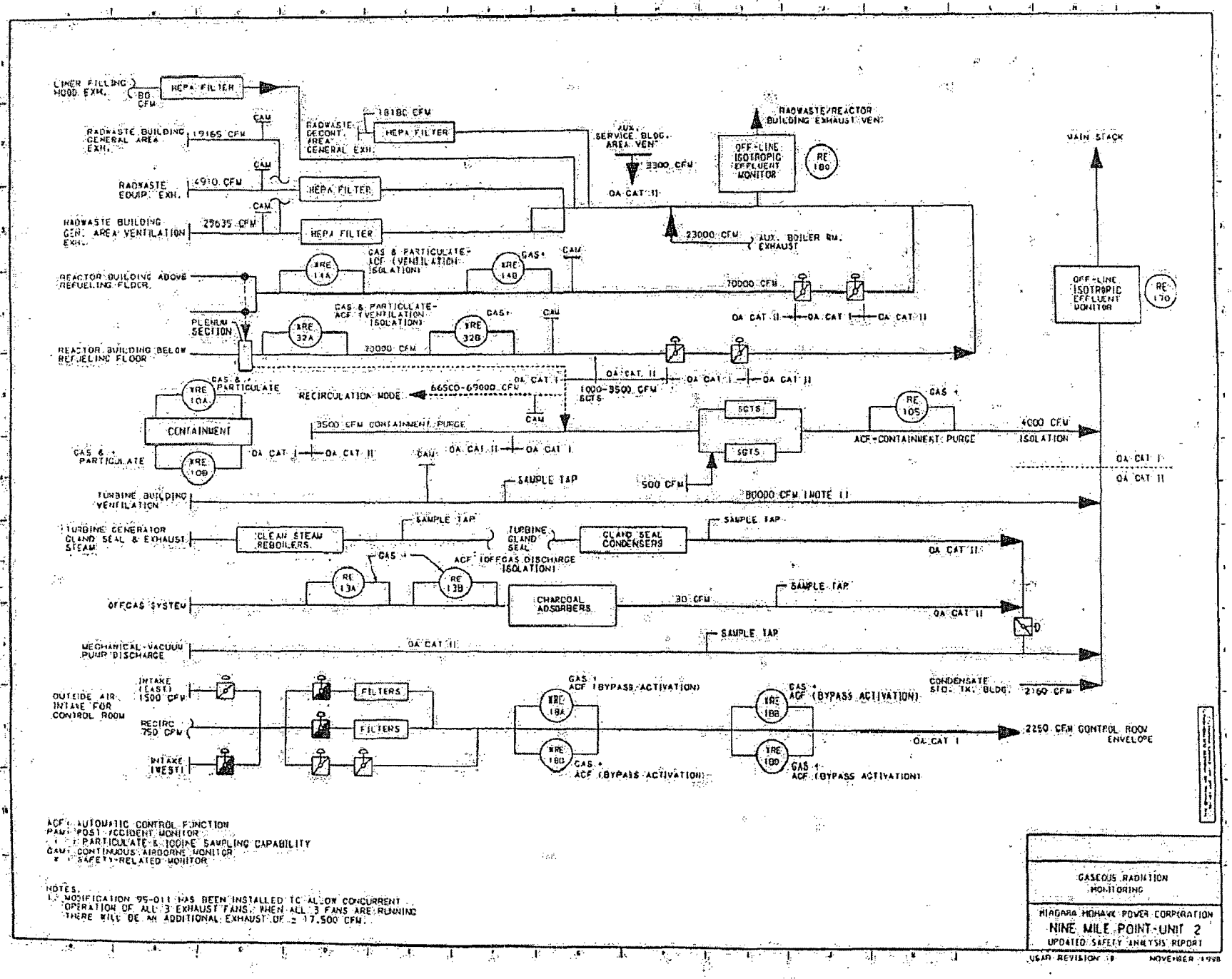

ACF = AUTOMATIC CONTROL FUNCTION
PAM = POST-ACCIDENT MONITOR
+ = PARTICULATE & IODINE SAMPLING CAPABILITY
CAM = CONTINUOUS AIRBORNE MONITOR
* = SAFETY-RELATED MONITOR

NOTES:
1. MODIFICATION 95-011 HAS BEEN INSTALLED TO ALLOW CONCURRENT OPERATION OF ALL 3 EXHAUST FANS. WHEN ALL 3 FANS ARE RUNNING THERE WILL BE AN ADDITIONAL EXHAUST OF ≈ 17,500 CFM.

GASEOUS RADIATION MONITORING

NIAGARA MOHAWK POWER CORPORATION
NINE MILE POINT-UNIT 2
UPDATED SAFETY ANALYSIS REPORT

USAR REVISION 0 NOVEMBER 1998

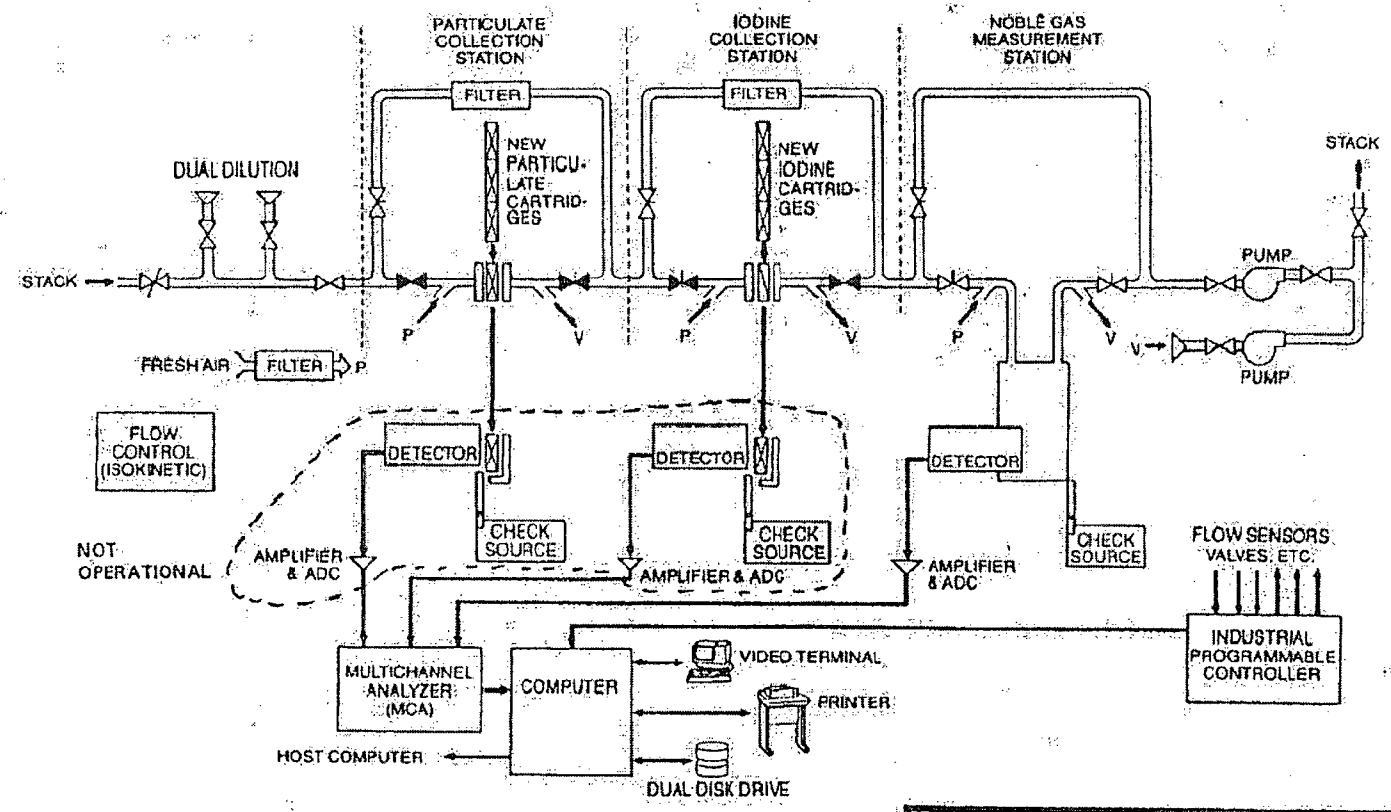

BLOCK DIAGRAM
TYPICAL GASEOUS EFFLUENT
MONITORING SYSTEM

NIAGARA MOHAWK POWER CORPORATION
NINE MILE POINT-UNIT 2
UPDATED SAFETY ANALYSIS REPORT

APPENDIX E
NINE MILE POINT ON-SITE AND OFF-SITE MAPS

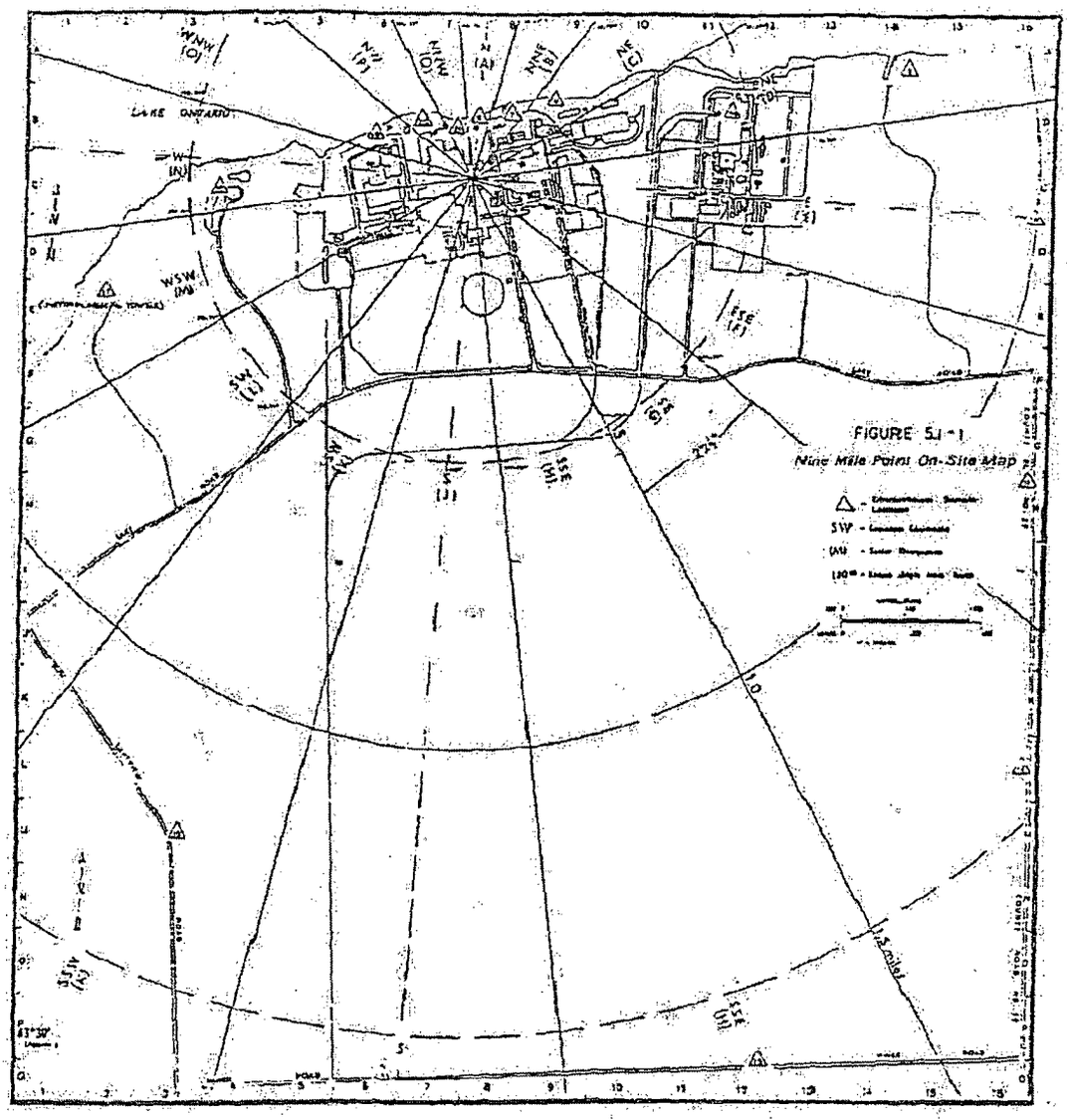
LAKE ONTARIO
FIGURE 5.1-1
Nine Mile Point On-Site Map

FIGURE D5.1-2
NINE MILE POINT
OFF-SITE MAP
(12/2005)

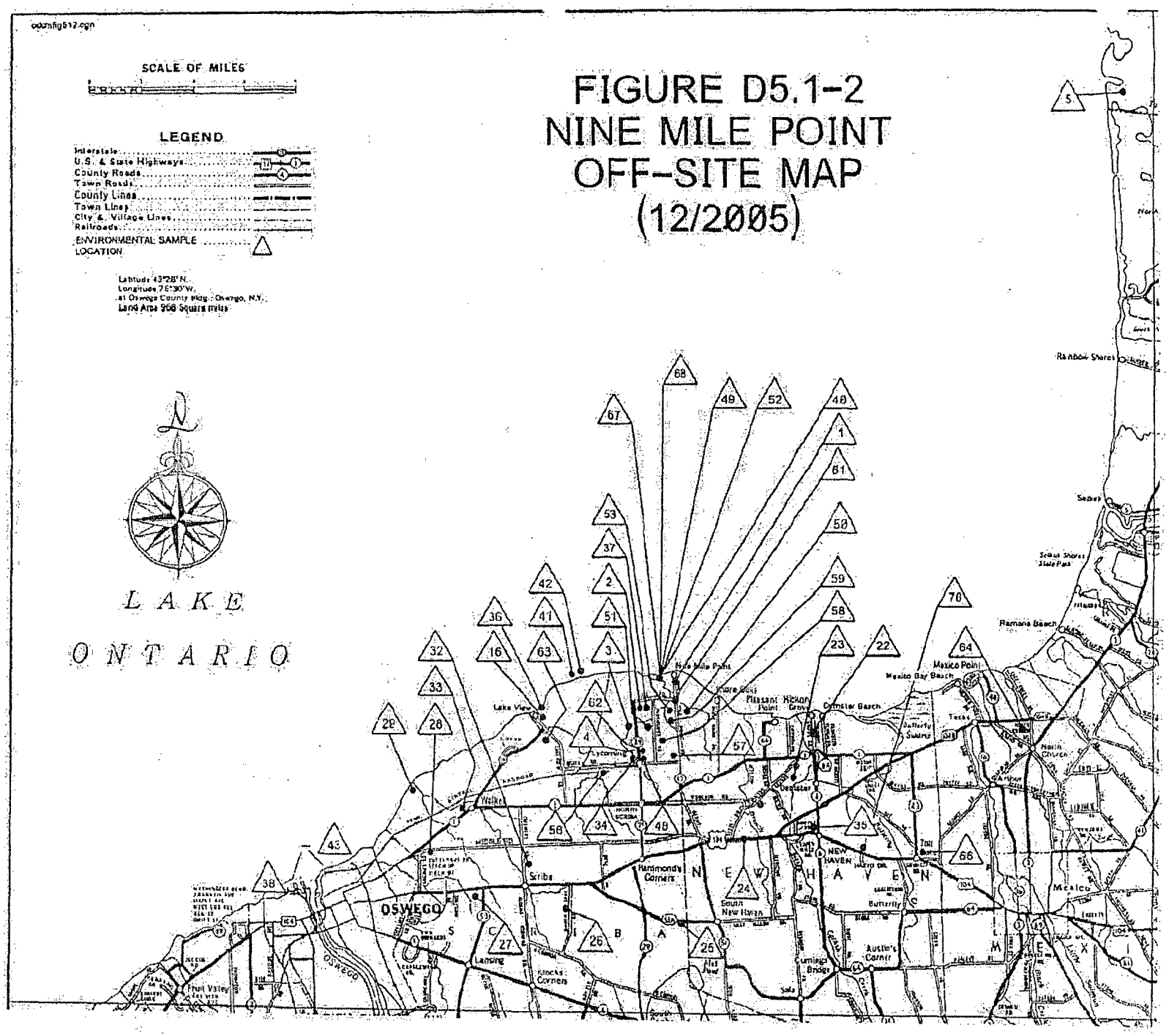

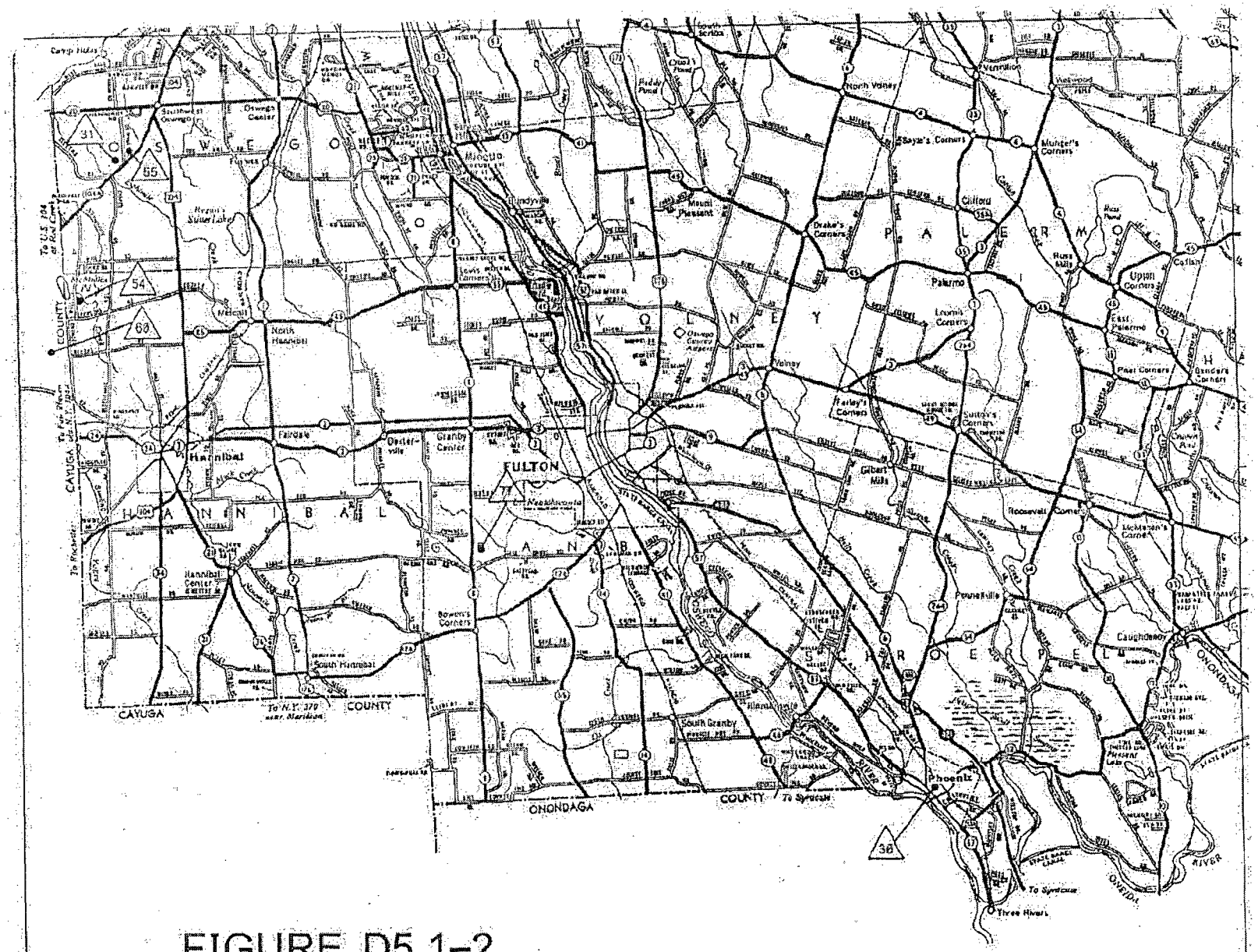
Hannibal
Fulton
Oswego
Phoenix
Three Rivers
Caughdenoy
Palermo
Mexico
Volney
Granby Center
Fairdale
North Hannibal
South Hannibal
Hannibal Center
Oswego Center
Minetto
Lacona
Gilbert Mills
Pennellville
Lewis Corners
Bowen's Corners
South Granby
Mount Pleasant
Clifford
Upton Corners
East Palermo
Loomis Corners
Harley's Corners
Roosevelt Corners
Pearl Corners
North Volney
Drake's Corners
Munger's Corners
Russ Mills
Cayuga
Onondaga
Oneida
To Syracuse
To N.Y. 370 near Meridian
To Rochester
To U.S. 104 at Red Creek
To Fair Haven
20 M 79

FIGURE D5.1-2