Entergy

Entergy Nuclear Northeast
Entergy Nuclear Operations, Inc.
James A. Fitzpatrick NPP
P.O. Box 110
Lycoming, NY 13093
Tel 315 342 3840

April 30, 2008
JAFP-08-0038

U.S. Nuclear Regulatory Commission
ATTN: Document Control Desk
Washington, D.C. 20555-0001

Subject: Entergy Nuclear Operations, Inc.
James A. FitzPatrick Nuclear Power Plant
Docket No. 50-333
License No. DPR-59

James A. FitzPatrick Nuclear Power Plant Inservice Inspection Program Relief Requests Third Ten-year Interval Closeout

Dear Sir or Madam:

Entergy Nuclear Operations Inc., (Entergy) completed the Third Inservice Inspection Interval. The attached report closes out the Third Ten-year Interval Relief Requests.

There are no commitments contained in this letter. If you have any questions, please contact Mr. Joe Pechacek at (315) 349-6766.

Very truly yours,

Jim Costedio
Manager, Licensing

JC:ed

Enclosure 1: James A. FitzPatrick Nuclear Power Plant Inservice Inspection Program Relief Requests Third Ten-year Interval Closeout
cc: next page

A047
NRR

cc:

Mr. Samuel J. Collins
Regional Administrator, Region I
U.S. Nuclear Regulatory Commission
475 Allendale Road
King of Prussia, PA 19406-1415

Mr. Adrian Muniz, Project Manager
Plant Licensing Branch I-1
Division of Operating Reactor Licensing
Office of Nuclear Reactor Regulation
U.S. Nuclear Regulatory Commission
Mail Stop O-8-G5
Washington, DC 20555-0001

NRC Resident Inspector
U.S. Nuclear Regulatory Commission
James A. FitzPatrick Nuclear Power Plant
P.O. Box 136
Lycoming, NY 13093

JAFP-08-0038

ENCLOSURE 1

James A. FitzPatrick Nuclear Power Plant
Inservice Inspection Program
Relief requests
3RD Ten-year Interval Closeout

Relief Request RR-CRV-1

JAMES A. FITZPATRICK NUCLEAR POWER PLANT
INSERVICE INSPECTION PROGRAM
RELIEF REQUESTS
3RD TEN-YEAR INTERVAL CLOSEOUT

Relief Request RR-CRV-1

Entergy Nuclear Operations, Inc.
James A. FitzPatrick NPP
Third Interval
Relief Request RR-CRV-1

Table of Contents

INTRODUCTION 4

RELIEF REQUEST 5

CLASS 1 COMPONENTS - Table RR-CRV-1 9

Code Category B-A:	**Pressure Retaining Welds in Reactor Vessel**	
Item No. B1.21	**Circumferential Weld**	
Weld ID:	**VC-BH-2-3**	**Attachment 1**
Item No. B1.22	**RPV Bottom head Meridional Weld**	
Weld ID:	**VV-BH-2A –thru 2F**	**Attachment 1**
Code Category B-D:	**Full Penetration Welds of Nozzles in RPV**	
Item No. B3.90	**Reactor Vessel Head Nozzle-to-Vessel Welds**	
Weld ID:	**N-TH-A**	**Attachment 2A**
Weld ID:	**N-TH-B**	**Attachment 2B**
Weld ID:	**N-TH-C**	**Attachment 2C**
Item No. B3.90	**Reactor Water Recirculation Nozzle-to-Vessel Welds**	
Weld ID:	**N-1A**	**Attachment 3A**
Weld ID:	**N-1B**	**Attachment 3B**
Weld ID:	**N-2A, B, E, H, K**	**Attachment 4A**
Weld ID:	**N-2F**	**Attachment 4B**
Weld ID:	**N-2C, D, G, J**	**Attachment 4C**
Item No. B3.90	**Main Steam Nozzle-to-Vessel Welds**	
Weld ID:	**N-3A, B**	**Attachment 5A**
Weld ID:	**N-3C, D**	**Attachment 5B**
Item No. B3.90	**Feedwater Nozzle-to-Vessel Welds**	
Weld ID:	**N-4A, C**	**Attachment 6A**
Weld ID:	**N-4B, D**	**Attachment 6B**
Item No. B3.90	**Core Spray Nozzle-to-Vessel Welds**	
Weld ID:	**N-5A**	**Attachment 7A**
Weld ID:	**N-5B**	**Attachment 7B**
Item No. B3.90	**Jet Pump Instrumentation Assembly Nozzle-to-Vessel Welds**	
Weld ID:	**N-8A**	**Not Required**
Weld ID:	**N-8B**	**Attachment 8**
Item No. B3.90	**Control Rod Drive Nozzle-to-Vessel Welds**	
Weld ID:	**N-9**	**Attachment 9**

Entergy Nuclear Operations, Inc.
James A. FitzPatrick NPP
Third Interval
Relief Request RR-CRV-1

Table of Contents

Code Category B-G-1: Pressure Retaining Bolting, >2"in. In Diameter
Item No. B6.40 RPV Threads in Flange ..... Attachment 10

Code Category B-K (B-H): Integrally Welded Attachments (Code Case N-509)
Item No. B10.10 RPV Integrally Welded Attachments ..... Attachment 11

CLASS 2 COMPONENTS - Table RR-CRV-2 15

Code Category C-A: Pressure Retaining Welds in Pressure Vessels
Item No. C1.20 Shell Circumferential Weld ..... Attachment 12

Code Category C-B: Pressure Retaining Nozzles Welds in Vessels
Item No. C2.20 Nozzles w/o Reinforcing Plate ..... Attachment 13

Code Category R-A (C-F-2) Circumferential Piping Weld (RI-ISI)
Item No. R1.20 RI-ISI (No Identified Damage Mechanism) ..... Attachment 14

INTRODUCTION

These Relief Requests are being submitted as part of the close-out for the 3rd Ten-year Interval performed in accordance with the ASME Section XI Code Edition 1989, No Addenda. The requests for relief enclosed are submitted pursuant to 10CFR50.55a(g)(5)(iii) as stipulated in a Safety-Evaluation (SE by the Office of the Nuclear Reactor Regulation). The requests, along with their specific regulatory basis are described in detail along with supporting technical discussion, documentation and referenced SE, when applicable. Included in the Tables and Attachments are welds examined during the 3rd Ten-Year Interval (10/98 –.2/08) whose inspections have **not** met the code required coverage as defined in Code Case N-460, Alternative Examination Coverage for Class 1 and Class 2 Welds, along with sketches, photographs and/or drawings depict the limiting condition(s) and coverage achieved.

Entergy Nuclear Operations, Inc.
James A. FitzPatrick NPP
Third Interval
Relief Request RR-CRV-1

Proposed Alternative
In Accordance with 10 CFR 50.55a(g)(5)(iii)

--Inservice Inspection Impracticability—

1. **ASME Code Component(s) Affected**

Code Classes:	1 and 2
References:	[1] ASME Section XI 1989 Edition, No Addenda [2] Sub-article IWB-2500, Table 2500-1 [3] Sub-article IWC-2500, Table 2500-1 [4] Code Case(s) N-509, N-578 [5] Relief Request RR-4 NRC SER JAFNPP, Third Interval ISI Program Relief Requests (TAC No. MA0711) dated November 25, 1998 [6] Relief Request RR-17, NRC SER JAFNPP RPV Circumferential and Vertical Shell Welds (TAC No. MA6215) [7] Relief Request RR-20 NRC SER JAFNPP, ASME Code – Relief for Risk-Informed ISI of Piping (TAC No. MA6926 [8] Relief Request RR-30, NRC SER JAFNPP, Third Interval ISI (TAC No. MC0293) dated July 21, 2004
Examination Categories:	B-A, B-D, B-G-1 B-K (B-H) C-A, C-B, R-A (C-F-2)
Item Numbers:	B1.20, B1.22, B3.90, B6.40, B10.10 C1.20, C2.22, R1.20 (C5.51)

2. **Applicable Code Edition and Addenda**

ASME Section XI 1989 with no Addenda

3. **Applicable Code Requirements**

IWB-2500, states in part, "Components shall be examined and tested as specified in Table IWB-2500-1. The method of examination for the components and parts of the pressure retaining boundaries shall comply with those tabulated in Table IWB-2500-1, except where alternate examination methods are used that meet the requirements of IWA-2240." Table IWB-2500-1 requires that a volumetric and/or surface examination be performed on specified components based Code Category and Item Number. The applicable examination area or volume and method required from Table IWB-2500-1are shown below in Table 1:

Table 1

Examination Category	Item Number	ASME Section XI Examination Requirements / Figure Number	Examination Method
B-A	B1.20/B1.22	IWB-2500-3	Volumetric
B-D	B3.90	IWB-2500-7(a) through (d)	Volumetric
B-G-1	B6.40	IWB-2500-12	Volumetric
B-K (B-H[1])	B10.10	IWB-2500-13, 14 and 15	Surface

Note: (1).Category B-H & B-K are examined in accordance with Alternate Rules for Selection and Examination of Class 1, 2, and 3 Integrally Welded Attachments Code N-509 (Relief Request RR-4) [6]

IWC-2500, states in part, "Components shall be examined and tested as specified in Table IWC-2500-1. The method of examination for the components and parts of the pressure retaining boundaries shall comply with those tabulated in Table IWC-2500-1, except where alternate examination methods are used that meet the requirements of IWA-2240." Table IWC-2500-1 requires that a volumetric and/or surface examination be performed on specified components based on Code Category and Item Number. The applicable examination area or volume and method required from Table IWC-2500-are shown below in Table 2:

Table 2

Examination Category	Item Number	ASME Section XI Examination Requirements / Figure Number	Examination Method
C-A	C1.20	IWC-2500-4 (a) or (b)	Surface and Volumetric
C-B	C2.22	IWC-2500-4 (a) or (b)	Volumetric
R-A[2] (C-F-2[1])	R1.20	IWC-2500-7	Volumetric

Note: (1). Code Categories R-A (C-F-2) are examined in accordance with JAF's Risk-Informed Inspection Program (RI-ISI) Code Case N-578 (NRC Approved Relief Request RR-20) [5]
(2). In addition to the requirements in Code Cases N-578, JAF's Risk-Informed Inspection Program (RI-ISI), has further defined segments and/or elements into a subset of Items No(s) that captures and identifies individual and combinations of damage mechanisms based on the component.

4. **Reason for Request – Impracticality of Compliance**

Pursuant to 10 CFR 50.55a(g)(5)(iii), relief is requested on the basis that the required "essentially 100%" coverage examination is impractical due to physical obstructions and limitations imposed by design, geometry and materials of construction of the component.

Relief is requested from performing a complete coverage examination of the entire volume or area required. Entire volume or area required is defined by ASME Section XI Code Case N-460 titled "Alternative Examination Coverage for Class and Class Welds, Section XI, Division 1." Code Case N-460 states in part, "...when the entire examination volume or area cannot be examined ...a reduction in examination coverage...may be accepted provided the reduction in coverage for that weld is less than 10%."

The NRC through, Information Notice 98-42 titled "Implementation of 10CFR 50.55a(g) Inservice Inspection Requirements," termed the reduction in coverage of less than 10% to be essentially 100 percent." Information Notice 98-42 states, in part, "The NRC has adopted and has further refined the definition of 'essentially 100% percent' to mean 'greater than 90 percent'...has been applied to all examinations of welds or other areas required by ASME Section XI."

Relief is requested from performing an examination of "essentially 100% of the required volume or area as applicable for components identified Table RR-CRV-1.

Note 1: Category B-A Reactor Pressure Vessel Shell Welds (Item Nos. B1.11 and B1.12) are not listed in Table RR-CRV-1. Relief was submitted and granted for coverage limitations for the augmented examination of the reactor pressure vessel shell welds in the following relief requests:

- JAFNPP relief request RR-17 to USNRC dated August 5, 1999/Supplemental Letter November 24, 1999, Augmented Inspection of RPV Circumferential Shell Welds
- NRC SER for RR-17 to JAFNPP dated February 22, 2000 (TAC No. MA6215)
- JAFNPP Relief Request RR-18 to USNRC dated August 5, 1999 (Letter JPN-99-26), Deferral of Inspections of RPV Axial Shell Welds & Projected Coverage
- NRC SER for RR-18 to JAFNPP dated February 29, 2000 (TAC No. MA6270)
- JAFNPP Relief Request RR-30 to USNRC dated August 4, 2003/Supplemental Letter December 30, 2003, Augmented RPV Vertical Shell Weld Examinations
- NRC SER for RR-30 to JAFNPP dated July 21, 2004 (TAC No. MC0293)

Note 2: Partial examinations performed on welds that are outside the previews of ASME Section XI i.e.; Intergranular Stress Corrosion Cracking (IGSCC), Augmented Core Spray, Feedwater/Main Steam High Stress Weld Inspection Program and/or other Augmented Inspection Programs that are not required to be examined in accordance with the Risk-Informed Inspection Program (RI-ISI), are not included in this relief request:

- JAFNPP relief request RR-5 to USNRC dated May 24, 2000, Letter No. JPN-00-016, Risk-Informed Inservice Inspection (RI-ISI) Program
- NRC SER for RR-5 to JAFNPP dated September 12, 2000, (TAC No. MA6926)

5. Relief Request Basis – Burden Caused by Compliance

At the time JAF was constructed, the ASME Boiler and Pressure Vessel Code only covered nuclear vessels and associated piping up to and including the first isolation or check valve. Therefore, piping, pumps and valves were built primarily to the rules of USAS B31.1.0 - 1967 Edition. The Reactor Vessel Code of Construction is the ASME Boiler and Pressure Vessel Code, Section III, 1965 Edition including the 1966 Winter Addenda. Based on the lack of Code guidance regarding consideration for NDE examination, literal compliance was not always feasible or practical within the limits of the current plant design.

Physical obstructions imposed by design, geometry and materials of construction are typical of vessel appurtenances, biological shield wall, insulation support rings, structural and component support members, adjacent component weldments in close proximity, unique component configurations (valves and pumps), and dissimilar metal weldments.

Compliance with the examination coverage requirements of ASME XI would result in extensive engineering, modification, redesign, or replacement of components.

6. Proposed Alternative and Basis for Use

As a minimum, all components received the required examination(s) to the extent practical with regard to the limitation or lack of access available. The examinations conducted confirmed satisfactory results evidencing no unacceptable flaws present, even though "essentially 100%" coverage was not attained. James A. FitzPatrick has concluded that if any active degradation mechanisms were to exist in the subject welds, those degradations would have been identified in the examinations performed.

For surface examinations, James A. FitzPatrick calculated the coverage percentage based on the area examined within the required coverage area divided by the required surface area to be examined. For volumetric (ultrasonic) examinations, the transition to PDI examinations varied the means of coverage determination based on code requirements. Earlier Code examination coverage was determined by a simple average of the examination scans performed. Later examinations performed per PDI requirements identify coverage based on a simple average of the scans per the requirement of PDI and CFR. The attachments within identify the means of determining examination coverage and are based on the requirements at the time the examinations were performed.

1. No additional volumetric examinations will be performed.

2. A visual examination (VT-2) is performed in conjunction with the pressure testing conducted on these components every refuel outage (with no evidence of leakage detected) in accordance with IWA-5000 and IWB-5000, which provides reasonable assurance of component integrity.

CLASS 1 COMPONENTS

Table RR-CRV-1

Class 1 Components with Less Than 100% Code Required Coverage

Section XI Code Category	Item No.	System	Component ID	Component Description	Limiting Condition	NDE Method	Percentage of Coverage Achieved	Remarks
B-A	B1.21	RPV	VC-BH-2-3	RPV Bottom Head Circumferential Welds	Inaccessible due to CRD and In-core Monitoring Housings	Volumetric (UT)	0%	Reference Attachment 1
B-A	B1.22	RPV	VV-BH-2A thru 2F	RPV Bottom Head Meridional Welds	Inaccessible due to CRD and In-core Monitoring Housings	Volumetric (UT)	0%	Reference Attachment 1
B-D	B3.90	RPV Head	N-TH-A	RPV Top Head – to-Nozzle Weld	OD Blend Radius	Volumetric (UT)	27.3%	Reference Attachment 2A
B-D	B3.90	RPV Head	N-TH-B	RPV Top Head – to-Nozzle Weld	OD Blend Radius	Volumetric (UT)	79%	Reference Attachment 2B

CLASS 1 COMPONENTS

Table RR-CRV-1

Components with Less Than 100% Code Required Coverage

Section XI Code Category	Item No.	System	Component ID	Component Description	Limiting Condition	NDE Method	Percentage of Coverage Achieved	Remarks
B-D	B3.90	RPV Head	N-TH-C	RPV Top Head – to-Nozzle Weld	OD Blend Radius	Volumetric (UT)	57.3%	Reference Attachment 2C
B-D	B3.90	Recirc. System	N-1A	RPV-to- Reactor Water Recirculation Outlet Nozzle Weld	Insulation Support Ring and Bracket & OD Blend Radius	Volumetric (UT)	40.6%	Reference Attachment 3A
B-D	B3.90	Recirc. System	N-1B	RPV-to- Reactor Water Recirculation Outlet Nozzle Weld	Insulation Support Ring and Bracket & OD Blend Radius	Volumetric (UT)	23.9%	Reference Attachment 3B
B-D	B3.90	Recirc. System	N-2A, B, E, H & K	RPV-to- Reactor Water Recirculation Inlet Nozzle Weld	Insulation Support Ring and Permanent Insulation & OD Blend Radius	Volumetric (UT)	66.1%	Reference Attachment 4A

CLASS 1 COMPONENTS

Table RR-CRV-1

Components with Less Than 100% Code Required Coverage

Section XI Code Category	Item No.	System	Component ID	Component Description	Limiting Condition	NDE Method	Percentage of Coverage Achieved	Remarks
B-D	B3.90	Recirc. System	N-2F	RPV-to- Reactor Water Recirculation Inlet Nozzle Weld	Insulation Support Ring and Permanent Insulation & OD Blend Radius	Volumetric (UT)	68%	Reference Attachment. 4B
B-D	B3.90	Recirc. System	N-2C, D, G & J	RPV-to- Reactor Water Recirculation Inlet Nozzle Weld	Insulation Support Ring and Permanent Insulation & OD Blend Radius	Volumetric (UT)	85.9%	Reference Attachment 4C
B-D	B3.90	Main Steam System	N-3A & B	RPV-to- MS Nozzle Weld	Insulation Support Ring and Permanent Insulation	Volumetric (UT)	35.6%	Reference Attachment 5A

CLASS 1 COMPONENTS

Table RR-CRV-1

Components with Less Than 100% Code Required Coverage

Section XI Code Category	Item No.	System	Component ID	Component Description	Limiting Condition	NDE Method	Percentage of Coverage Achieved	Remarks
B-D	B3.90	Main Steam System	N-3C & D	RPV-to- MS Nozzle Weld	Insulation Support Ring and Permanent Insulation & OD Blend Radius	Volumetric (UT)	46.3%	Reference Attachment 5B
B-D	B3.90	Feedwater System	N-4A & C	RPV-to- FW Nozzle Weld	Nozzle Obstruction & OD Blend Radius	Volumetric (UT)	42 %	Reference Attachment 6A
B-D	B3.90	Feedwater System	N-4B & D	RPV-to- FW Nozzle Weld	Permanent Insulation & OD Blend Radius	Volumetric (UT)	53%	Reference Attachment 6B

CLASS 1 COMPONENTS

Table RR-CRV-1

Components with Less Than 100% Code Required Coverage

Section XI Code Category	Item No.	System	Component ID	Component Description	Limiting Condition	NDE Method	Percentage of Coverage Achieved	Remarks
B-D	B3.90	Core Spray System	N-5A	RPV-to- CS Nozzle Weld	OD Blend Radius & proximity of thermocouple pad	Volumetric (UT)	38.11%	Reference Attachment 7A
B-D	B3.90	Core Spray System	N-5B	RPV-to- CS Nozzle Weld	OD Blend Radius & proximity of thermocouple pad	Volumetric (UT)	38.6%	Reference Attachment 7B
B-D	B3.90	Jet Pump Instrumentation (JPI) Assembly System	N-8A	RPV-to- JPI Nozzle Weld	Permanent Insulation & OD Blend Radius	Volumetric (UT)	93.4%	Relief Not Required
B-D	B3.90	Jet Pump Instrumentation (JPI) Assembly System	N-8B	RPV-to- JPI Nozzle Weld	Permanent Insulation & OD Blend Radius	Volumetric (UT)	71.6%	Reference Attachment 8

CLASS 1 COMPONENTS

Table RR-CRV-1

Components with Less Than 100% Code Required Coverage

Section XI Code Category	Item No.	System	Component ID	Component Description	Limiting Condition	NDE Method	Percentage of Coverage Achieved	Remarks
B-D	B3.90	Control Rod Drive System	N-9	RPV-to- CRD Nozzle Weld	Insulation Support Ring & OD Blend Radius	Volumetric (UT)	66.2%	Reference Attachment 9
B-G-1	B6.40	RPV Flange	Threads in Flange 14-52	Threads in Flange	Design and Configuration	Volumetric (UT)	79%	Reference Attachment 10
B-K (B-H)	B10.10	RPV Stabilizer Brackets	Stabilizer-1, 2, 3, and 4	RPV Integrally Welded Attachment	Design and Configuration	Surface (MT)	34%	Reference Attachment 11

CLASS 2 COMPONENTS

Table RR-CRV-2

Class 2 Components with Less Than 100% Code Required Coverage

Section XI Code Category	Item No.	System	Component ID	Component Description	Limiting Condition	NDE Method	Percentage of Coverage Achieved	Remarks
C-A	C1.20	Scram Tank 03TK-1A	BH-1A	Tank Shell-to-Bottom Head Weld	Support Rings & Weld-0-lets	Volumetric (UT)	18%	Reference Attachment 12
C-B	C2.22	Scram Tank 03TK-1A	N-1-A-IR	Inner Radius	Design/ Configuration & OD Blend Radius	Volumetric (UT)	85%	Reference Attachment 13
R-A (C-F-2)	R1.20 (C5.51)	HPCI	14-23-433	Pipe to - Valve	Design and Configuration	Volumetric (UT)	87.5%	Reference Attachment 14

Attachment 1

Reactor Pressure Vessel Bottom Head Welds
Code Category: B-A
Item No. B1.21 & B1.22
Weld ID: VC-BH-2-3 & VV-BH-2A thru 2F

Basis: Inspection of the Code-required accessible length of one weld was conducted on the RPV Bottom head Circumferential Welds with limitation based on restricted access. Access to the area is limited to four 18" diameter manways 90^0 apart in the vessel support skirt. In addition, the one hundred and thirty-seven (137) control rod drives and forty-three (43) in-core monitor instrumentation penetrations present extensive interference. The positioning and spacing of these components prevent an inspector from physically being able to reach them and limits the surface distance required to perform the examination (reference attached photograph depicting configuration). This combined with the curvature of the bottom head and the Bio-shield wall narrowing in this area precludes access. Permanent vessel insulation and limited storage space for those insulation panels which require removal is extremely limited based on the size of the manways.

- Inaccessible due to the proximity of CRD Housings penetrations
- Physical access to the Bottom Head Dollar Plate Weld inaccessible

Attachment 1

Reactor Pressure Vessel Bottom Head Welds
Code Category: B-A
Item No. B1.21 & B1.22
Weld ID: VC-BH-2-3 & VV-BH-2A thru 2F

Plan View from Drawing MSK-3036

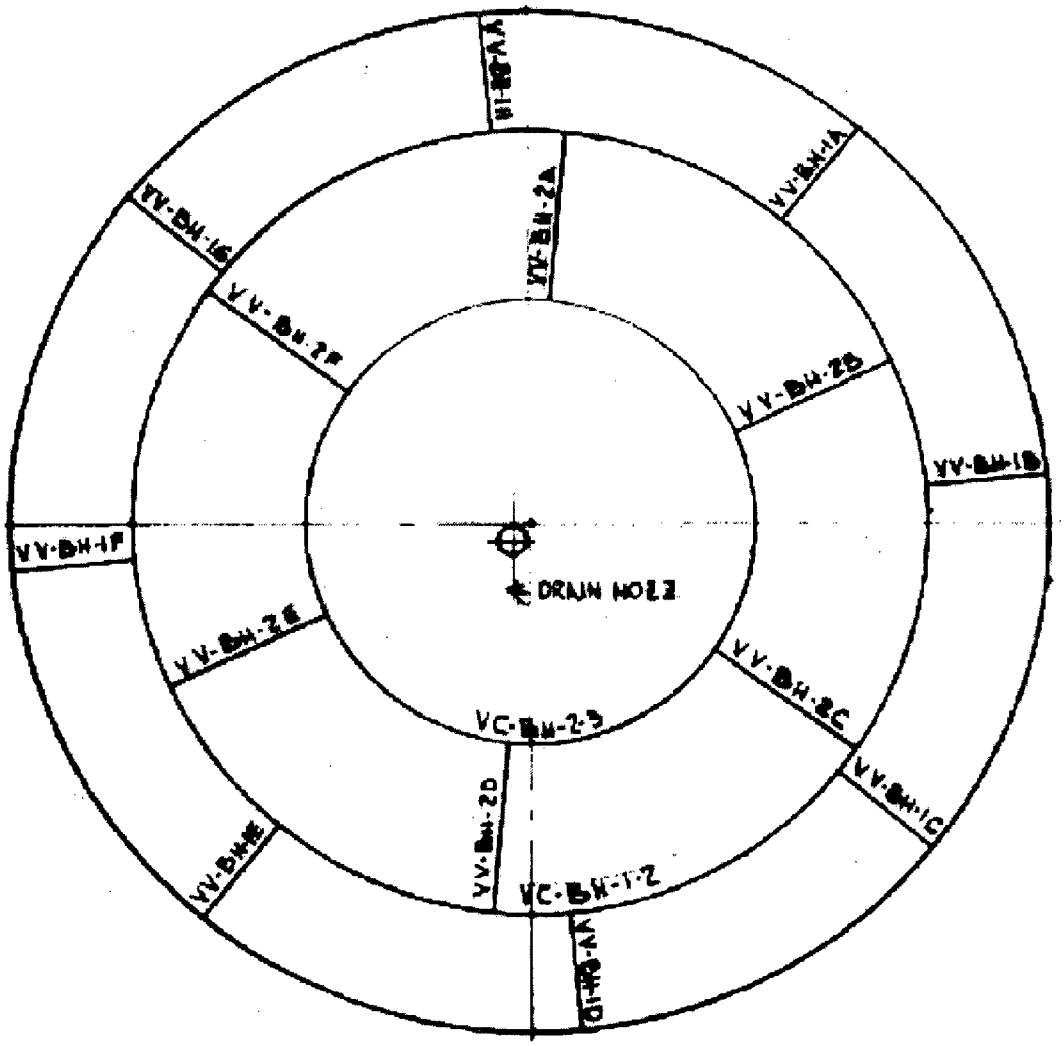

Attachment 1

Reactor Pressure Vessel Bottom Head Welds
Code Category: B-A
Item No. B1.21 & B1.22
Weld ID: VC-BH-2-3 & VV-BH-2A thru 2F

RPV Bottom Head Drawing Showing CRD Penetrations

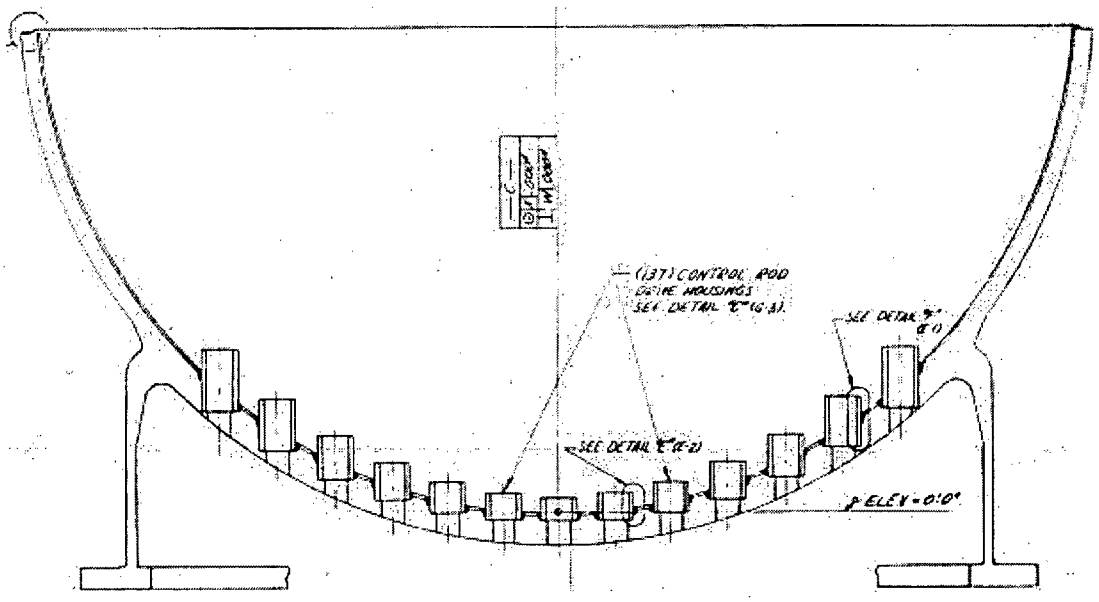

Attachment 1

Reactor Pressure Vessel Bottom Head Welds
Code Category: B-A
Item No. B1.21 & B1.22
Weld ID: VC-BH-2-3 & VV-BH-2A thru 2F

18" Man way (Typical)

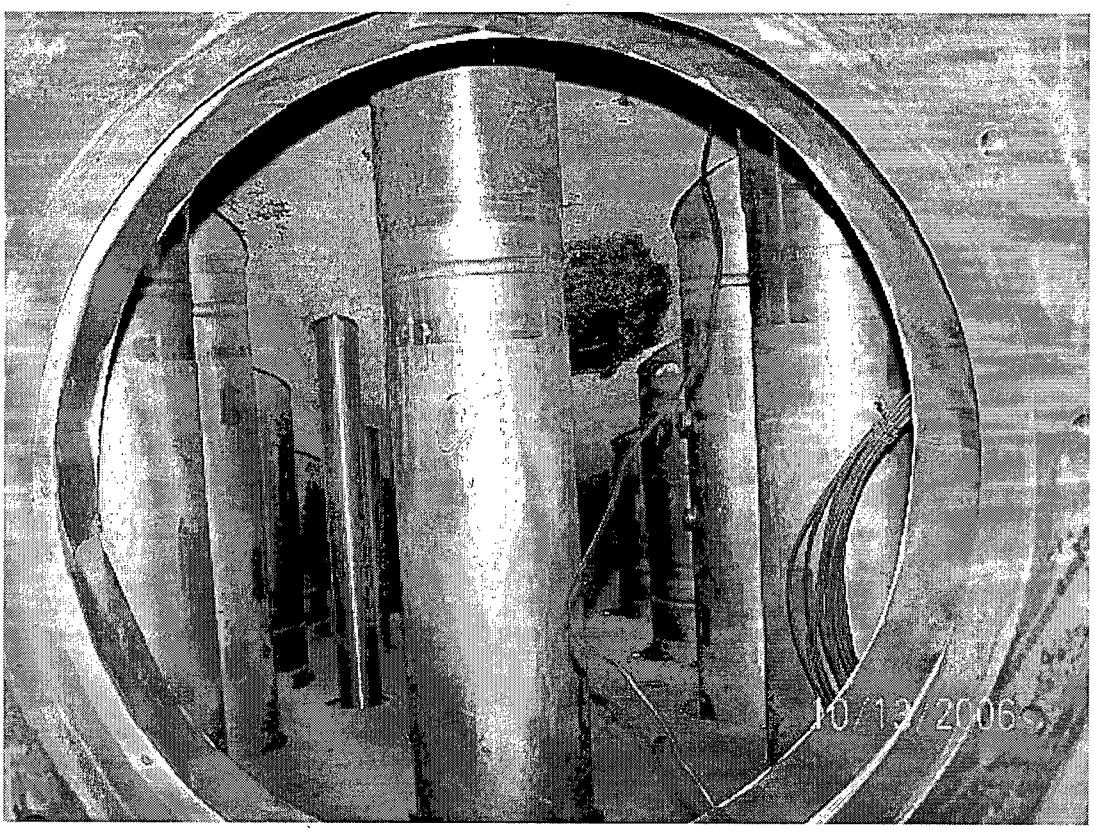

Attachment 1

Reactor Pressure Vessel Bottom Head Welds
Code Category: B-A
Item No. B1.21 & B1.22
Weld ID: VC-BH-2-3 & VV-BH-2A thru 2F

Depicts Proximity to Weld

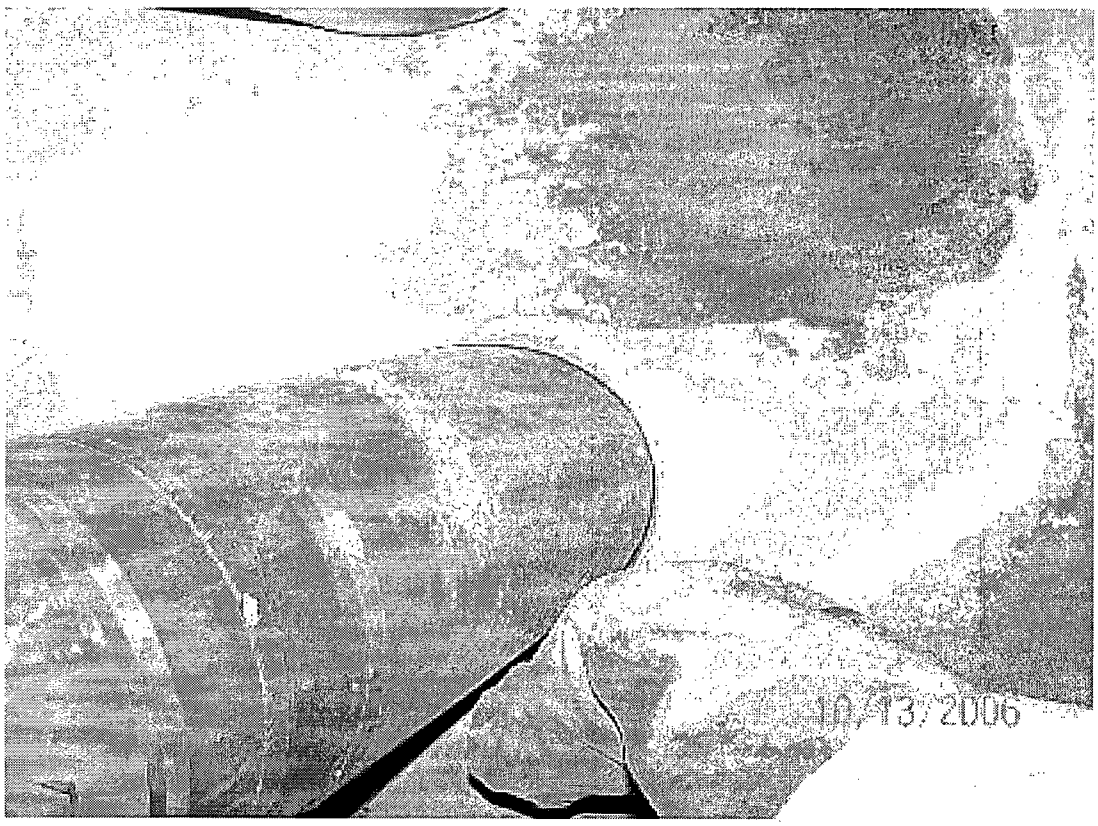

Attachment 1

Reactor Pressure Vessel Bottom Head Welds
Code Category: B-A
Item No. B1.21 & B1.22
Weld ID: VC-BH-2-3 & VV-BH-2A thru 2F

Depicts Proximity to Weld

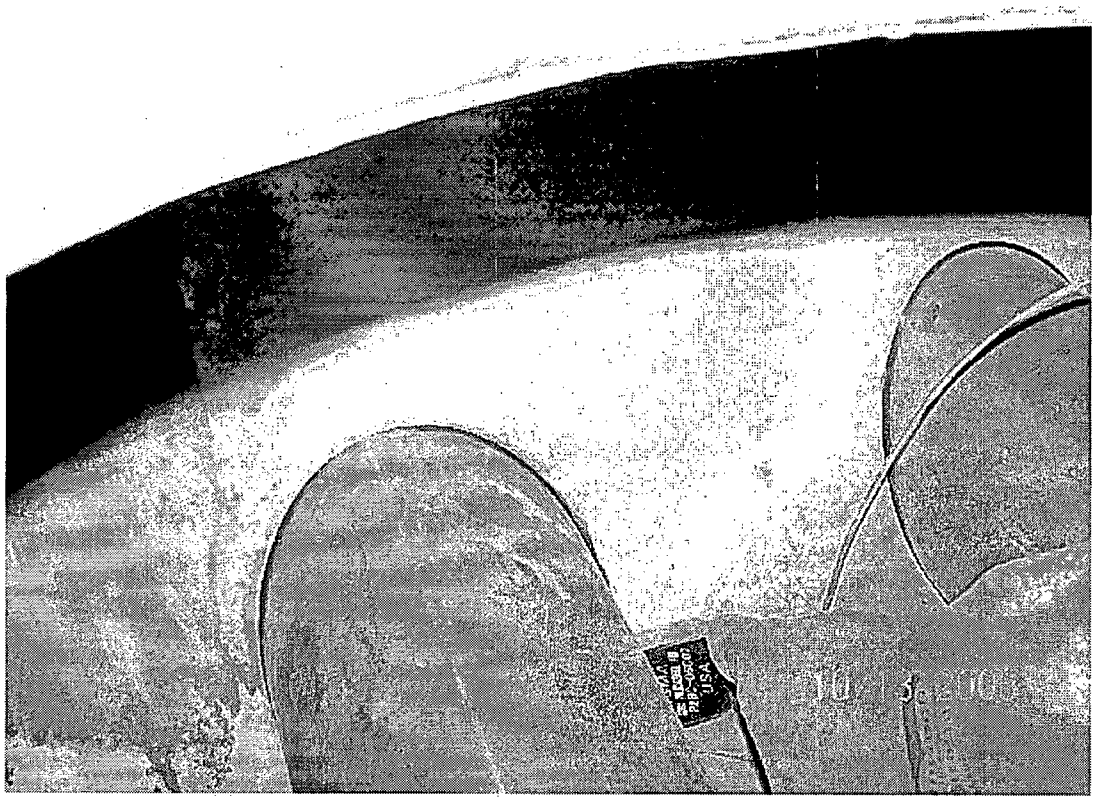

Attachment 2A

Reactor Pressure Vessel Top Head - to - Nozzle Weld
Code Category: B-D
Item No. B3.90
Weld ID: N-TH-A

Total Volume Calculation
(NDE Report RO14-UT-041)

Base Metal Nozzle

Area = a + b − c
Area = πr^2 (∝ ÷ 360°)
Area = 3.14 x 0.95"² (44° ÷ 360°)
Area = 2.84"² (0.122)
Area = 0.35"²

Area = a + c + d + e
Area = b x h
Area = 0.95" x 2.75"
Area = 2.61"²

Weld Metal

#1 Area = a + i + j
Area = ½ (b x h)
Area = ½ (0.15" x 0.30")
Area = ½ (0.45"²)
Area = 0.023"²

#2 Area = i + k + h + m
Area = b x h
Area = 0.15" x 0.50"
Area = 0.075"²

#3 Area = k + l + m
Area = ½ (b x h)
Area = ½ (0.15" x 0.35")
Area = ½ (0.0525"²)
Area = 0.026"²

#4 Area = g − h + m + n
Area = b x h
Area = 0.50" x 2.10"
Area = 1.05"²

#5 Area = f + g + n
Area = ½ (b x h)
Area = ½ (0.25" x 0.50")
Area = ½ (0.125"²)
Area = 0.063"²

Total Weld Metal

Area = 1 − 2 + 3 + 4 + 5
Area = 0.023"²
0.075"²
0.026"²
1.050"²
0.063"²
1.237"²

Total Examination Area

Shell Base Metal =	2.63"²
Nozzle Base Metal =	2.96"²
Weld Metal =	1.237"²
	6.827"²

Attachment 2A

Reactor Pressure Vessel Top Head – to - Nozzle Weld
Code Category: B-D
Item No. B3.90
Weld ID: N-TH-A

Coverage Calculation Axial and Total
(NDE Report RO14-UT-041)

Base Metal Coverage

Area = a + b + c
Area = ½ (b x h)
Area = ½ (0.40" x 0.70")
Area = ½ (0.28"²)
Area = 0.14"²

Area = Base Metal Shell – (a + b + c) = Scanned Area
Area = 2.63"² - 014"² = 2.49"² scanned

Area = d + e + f
Area = ½ (b x h)
Area = ½ (0.25" x 0.45")
Area = ½ (0.1125"²)
Area = 0.06"² Scanned

Total Base Metal Scanned

2.49"² + 0.06"² = 2.55"² scanned
2.55"² ÷ 5.59"² Total Base Metal = 0.4562 or 45.62% scanned

Weld Metal Coverage

#1 Area = c + d + g
Area = ½ (b x h)
Area = ½ (0.50" x 0.93")
Area = ½ (0.465"²)
Area = 0.233"² scanned in one direction

#2 Area = d + i + h + g
Area = b x h
Area = 0.50" x 0.35"
Area = 0.175"² scanned in one direction

Base Metal %	**Weld Metal %**
0° = 15.70%	0° = 0%
45° Ax. 60° Ax = 45.62%	45° Ax 60° Ax = 16.53%
45° Circ. = 15.70%	45° Circ. = 0%
60° Circ. = 15.70%	60° Circ. = 0%
92.74%	16.53%

92.74% ÷ 4 = 23.18%
16.53% ÷ 4 = 4.13%
27.31% ~~÷ 2 = 13.66%~~ **Total Coverage**
BJF 11-8-00

Area = #1 + #2 = scanned in one direction
Area = 0.233"² + 0.175"² = 0.409"² scanned in one direction
Area = 0.409"² ÷ 1.237"² Total Weld Metal = 0.3306 or 33.06%
Area = 33.06% ÷ 2 = 16.53%

Attachment 2A

Reactor Pressure Vessel Top Head – to - Nozzle Weld
Code Category: B-D
Item No. B3.90
Weld ID: N-TH-A

Circumferential Coverage Calculation
(NDE Report RO14-UT-041)

Area covered by 0°, 47°, 61°

Area = ½ (b x h)
Area = ½ (0.90" x 1.95")
Area = ½ (1.755"²)
Area = 0.878"²

Base Metal Coverage

Area = 0.878"² ÷ 5.59"² Total Base Metal = 0.1570 or 15.70%

Attachment 2A

Reactor Pressure Vessel Top Head - to - Nozzle Weld
Code Category: B-D
Item No. B3.90
Weld ID: N-TH-A

Nozzle Configuration for N-TH-A
(NDE Report RO14-UT-041)

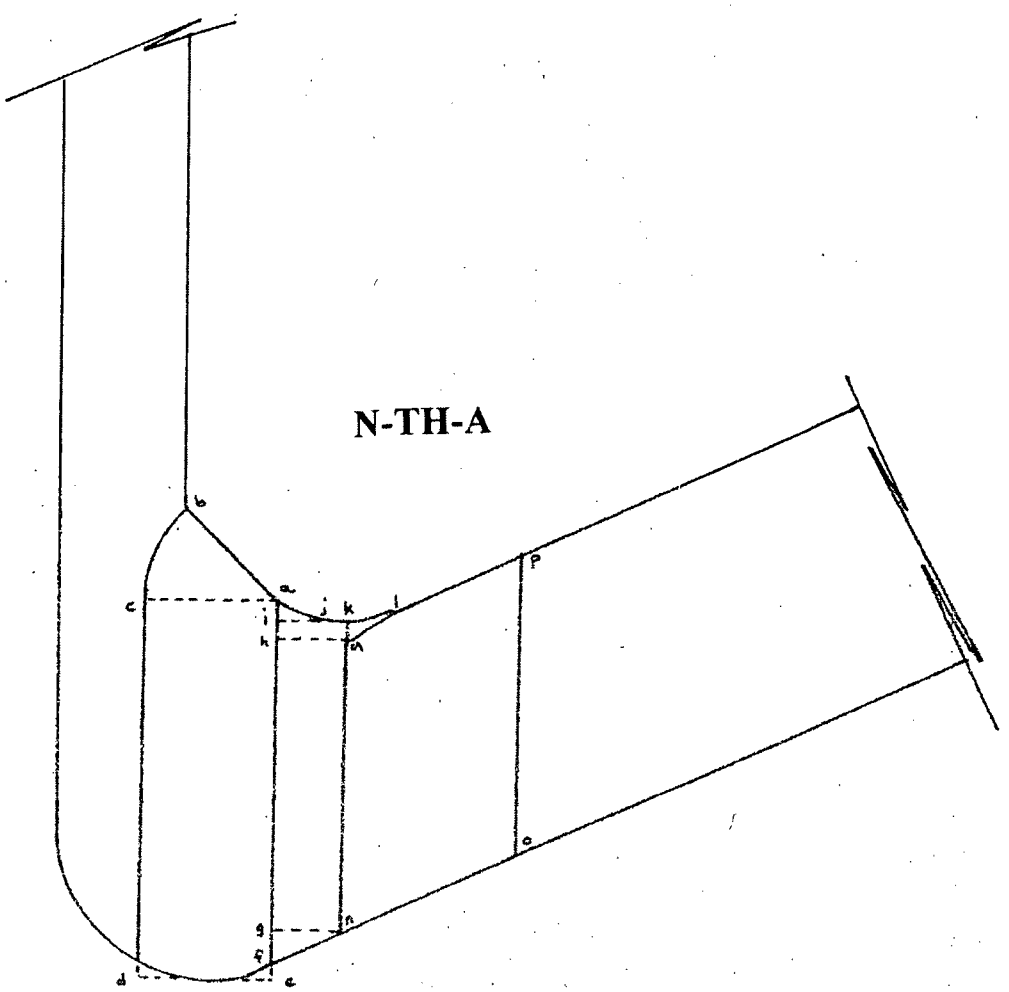

Attachment 2A

Reactor Pressure Vessel Top Head – to - Nozzle Weld
Code Category: B-D
Item No. B3.90
Weld ID: N-TH-A

Axial Coverage Plot
(NDE Report RO14-UT-041)

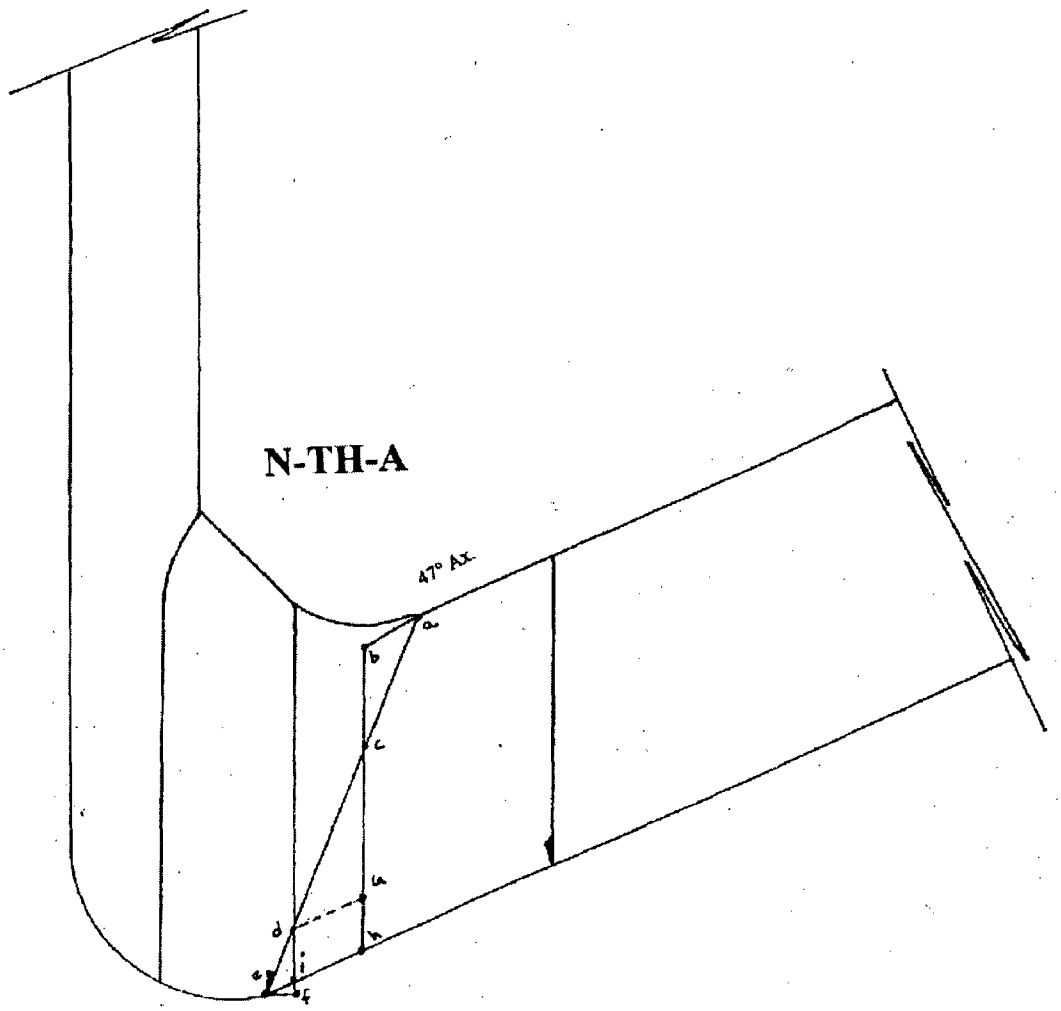

Attachment 2A

Reactor Pressure Vessel Top Head – to - Nozzle Weld
Code Category: B-D
Item No. B3.90
Weld ID: N-TH-A

Circumferential Coverage Plot
(NDE Report RO14-UT-041)

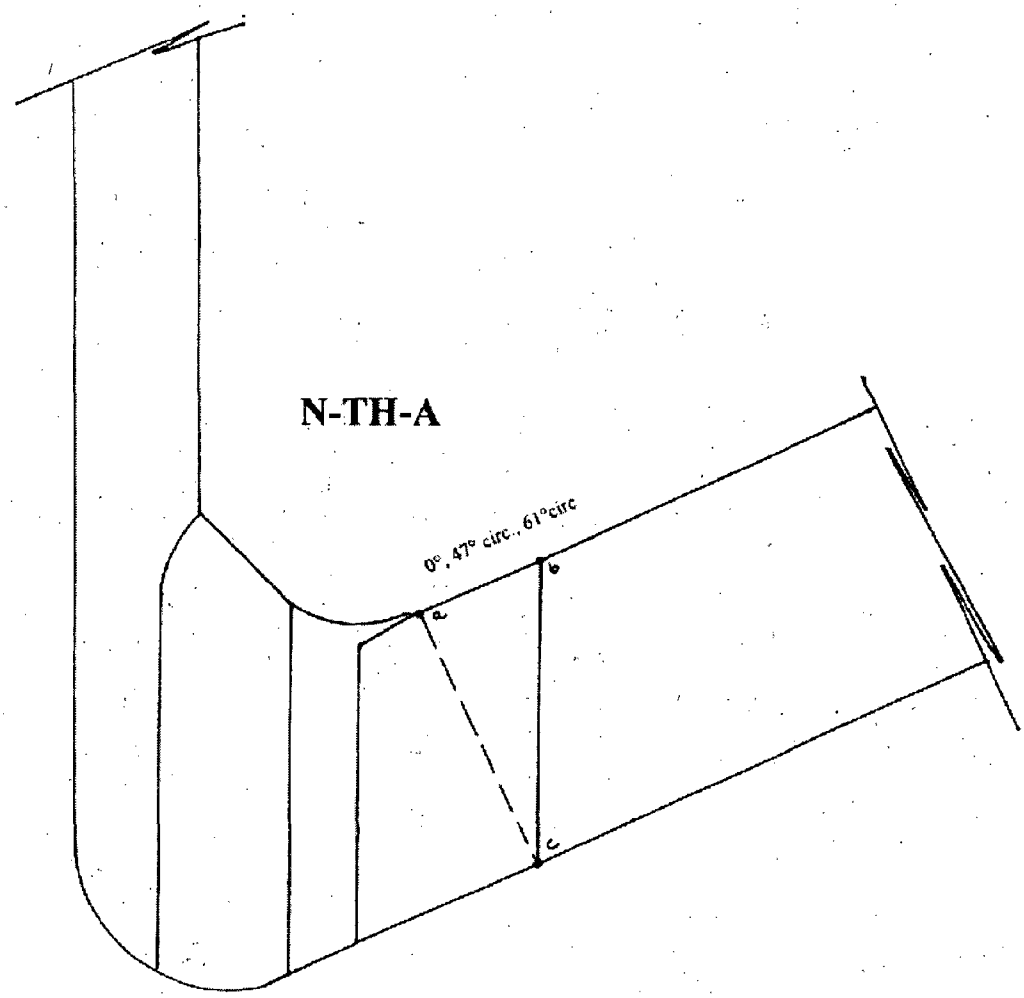

Attachment 2B

Reactor Pressure Vessel Top Head – to - Nozzle Weld
Code Category: B-D
Item No. B3.90
Weld ID: N-TH-B

Coverage Calculation
(NDE Report 06UT117)

		CODE CROSS-SECTIONAL AREA		TOTAL CODE COVERAGE		
Weld Length = 360. Exam Volume = 32.2		Required Exam Area Sq. In.	Area Scanned Manual	Percent of Area Manual	Weld Length Manual	Percent Manual
60° NS T-Scan	A	9.8	4.3	13.4%	360	6.7%
60° S6 T-Scan	A	22.4	22.3	69.3%	360	34.6%
60° S4 T-Scan	A	0.0	0.0	0.0%	360	0.0%
60° NS P-Scan	A	9.8	3.1	9.6%	360	4.8%
60° S6 P-Scan	A	22.4	21.2	65.8%	360	32.9%
60° S4/IRS Scan	A	0.0	0.0	0.0%	360	0.0%
60° NS T-Scan						
60° S6 T-Scan						
60° S4 T-Scan						
60° NS P-Scan						
60° S6 P-Scan						
60°S4/IRS Scan						
				% Total Composite Coverage =		79.0%

Attachment 2B

Reactor Pressure Vessel Top Head – to - Nozzle Weld
Code Category: B-D
Item No. B3.90
Weld ID: N-TH-B

Axial Coverage Plot
(NDE Report 06UT117)

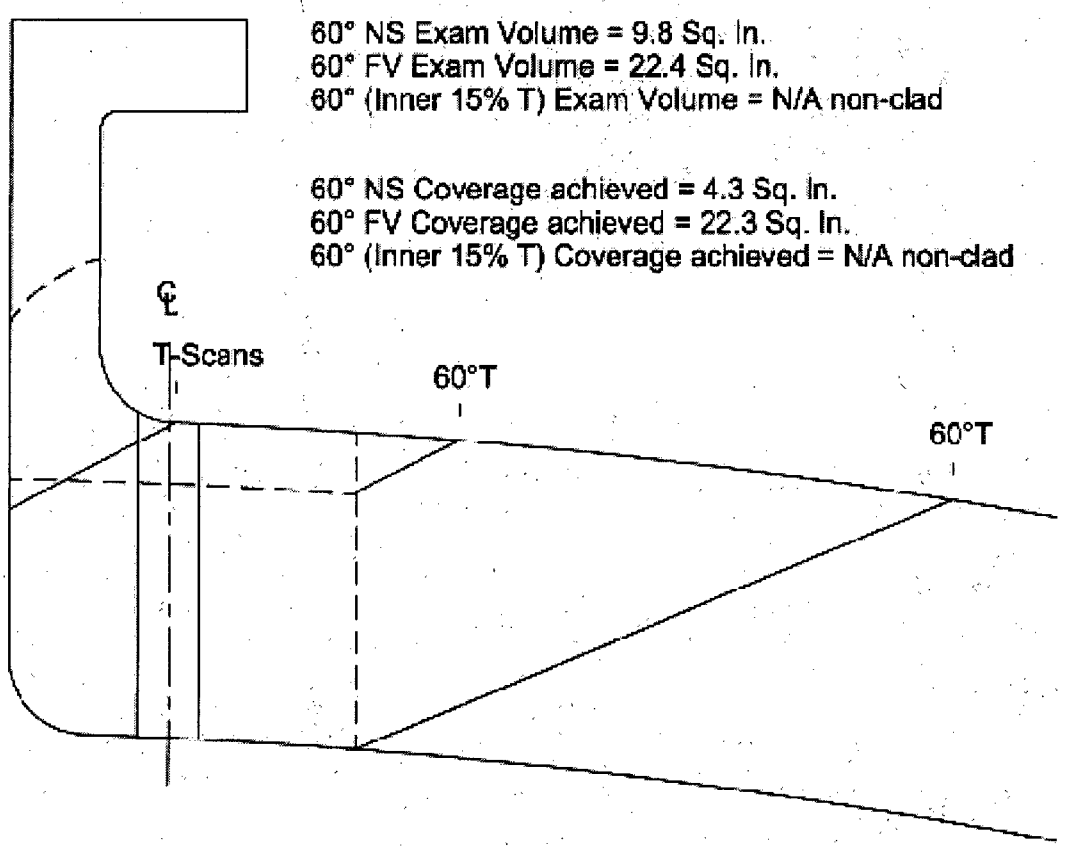

Attachment 2B

Reactor Pressure Vessel Top Head – to - Nozzle Weld
Code Category: B-D
Item No. B3.90
Weld ID: N-TH-B

Circumferential Coverage Plot
(NDE Report 06UT117)

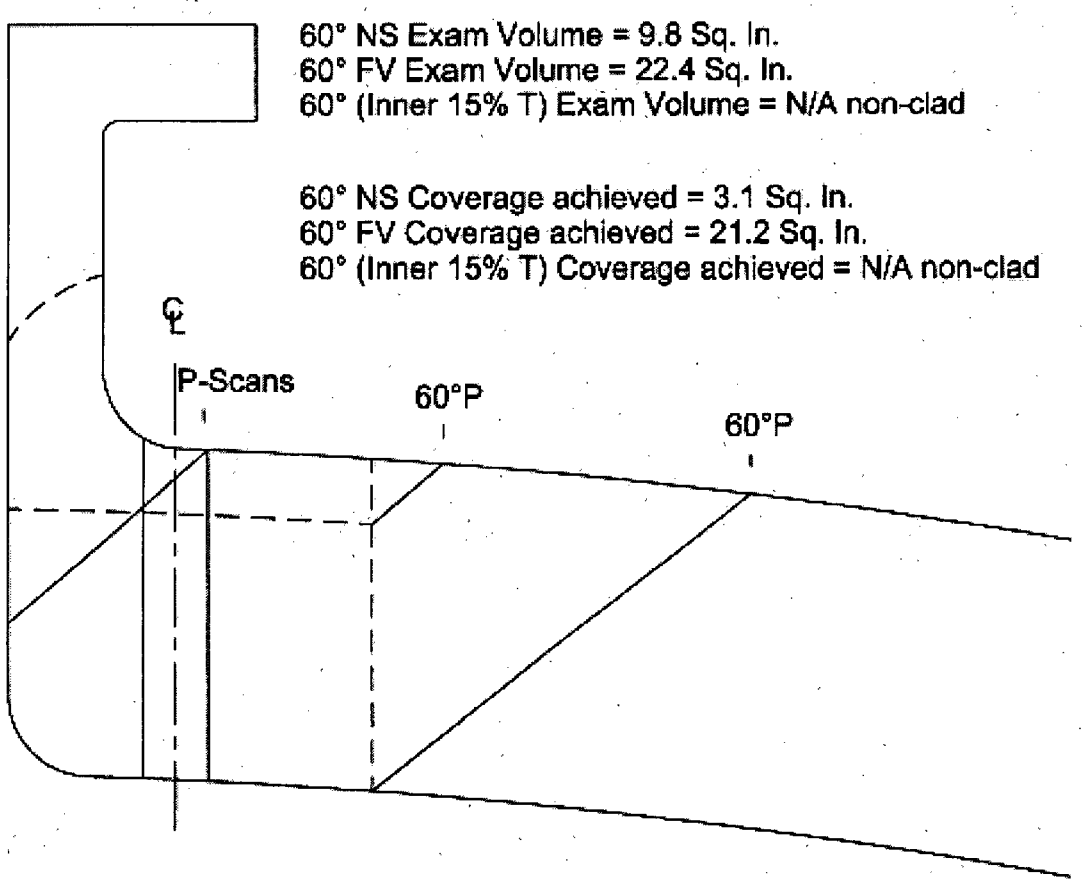

Attachment 2C

Reactor Pressure Vessel Top Head – to - Nozzle Weld
Code Category: B-D
Item No. B3.90
Weld ID: N-TH-C

Coverage Calculation
(NDE Report 06UT118)

		CODE CROSS-SECTIONAL AREA		TOTAL CODE COVERAGE		
Weld Length = 360. Exam Volume = 37.5		Required Exam Area Sq. In.	Area Scanned Manual	Percent of Area Manual	Weld Length Manual	Percent Manual
60° NS T-Scan	A	12.3	2.4	6.4%	360	3.2%
60° S6 T-Scan	A	25.2	23.0	61.3%	360	30.7%
60° S4 T-Scan	A	0.0	0.0	0.0%	0	0.0%
60° NS P-Scan	A	12.3	1.7	4.5%	360	2.3%
60° S6 P-Scan	A	25.2	15.9	42.4%	360	21.2%
60° S4/IRS Scan	A	0.0	0.0	0.0%	0	0.0%
60° NS T-Scan						
60° S6 T-Scan						
60° S4 T-Scan						
60° NS P-Scan						
60° S6 P-Scan						
60°S4/IRS Scan						
				% Total Composite Coverage =		57.3%

Attachment 2C

Reactor Pressure Vessel Top Head – to - Nozzle Weld
Code Category: B-D
Item No. B3.90
Weld ID: N-TH-C

Axial Coverage Plot
(NDE Report 06UT118)

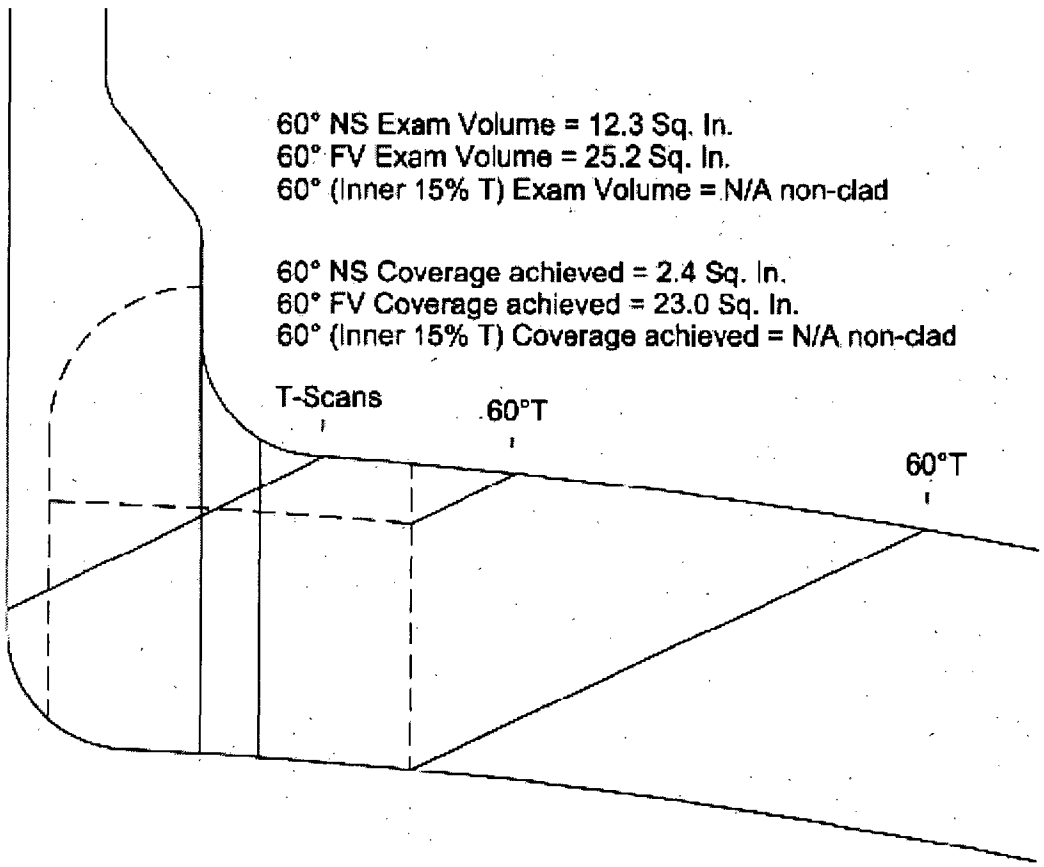

Attachment 2C

Reactor Pressure Vessel Top Head – to - Nozzle Weld
Code Category: B-D
Item No. B3.90
Weld ID: N-TH-C

Circumferential Coverage Plot
(NDE Report 06UT118)

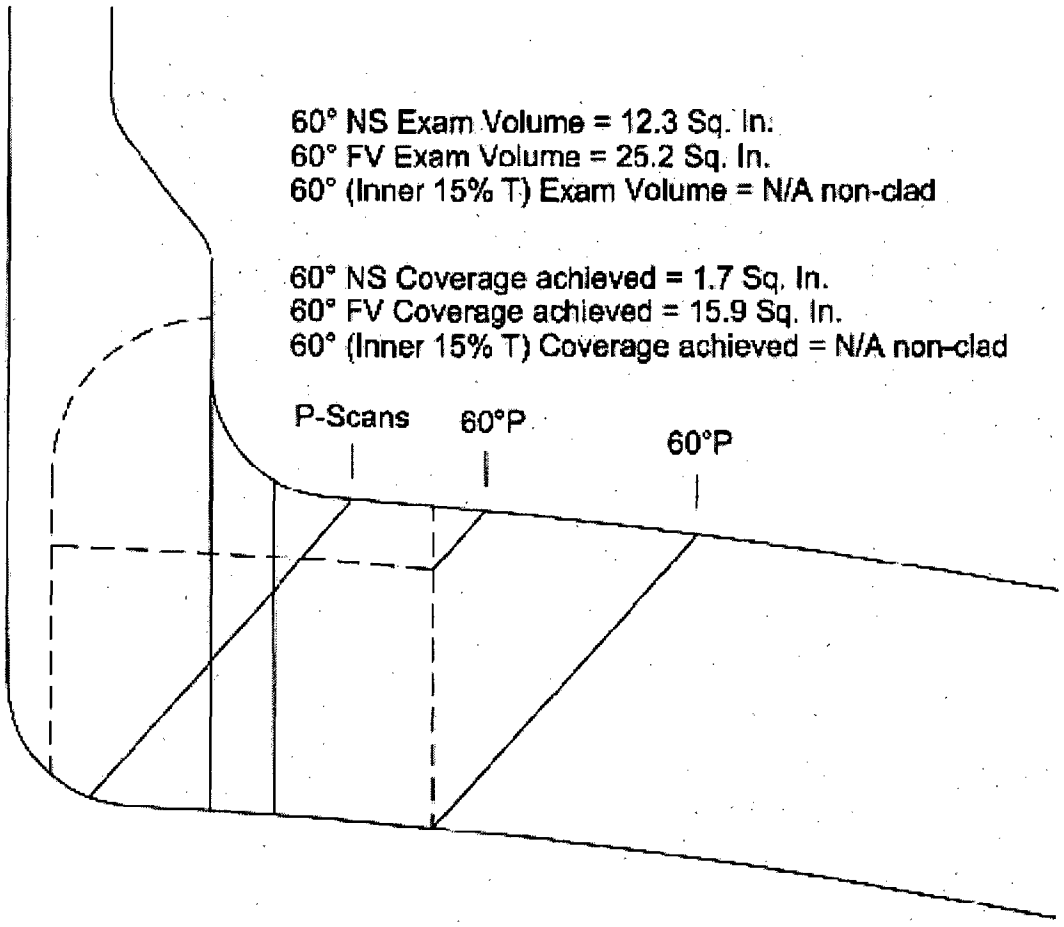

Attachment 3A

Reactor Pressure Vessel Shell – to - Nozzle Weld
Code Category: B-D
Item No. B3.90
Weld ID: N-1A

Coverage Calculation
(NDE Report 06UT121)

		CODE CROSS-SECTIONAL AREA		TOTAL CODE COVERAGE		
Weld Length = 360. Exam Volume = 69.4		Required Exam Area Sq. In.	Area Scanned Manual	Percent of Area Manual	Weld Length Manual	Percent Manual
60° NS T-Scan	A	20.5	0.8	1.2%	306	0.5%
60° S6 T-Scan	A	40.6	27.5	39.6%	306	16.8%
60° S4 T-Scan	A	8.3	8.3	12.0%	306	5.1%
60° NS P-Scan	A	20.5	0.4	0.6%	360	0.3%
60° S6 P-Scan	A	40.6	14.6	21.0%	360	10.5%
60° S4/IRS Scan	A	8.3	5.8	8.4%	360	4.2%
60° NS T-Scan	B	20.5	0.8	1.2%	54	0.1%
60° S6 T-Scan	B	40.6	24.7	35.6%	54	2.7%
60° S4 T-Scan	B	8.3	4.2	6.1%	54	0.5%
60° NS P-Scan						
60° S6 P-Scan						
60°S4/IRS Scan						
				% Total Composite Coverage =		40.6%

Attachment 3A

Reactor Pressure Vessel Shell – to - Nozzle Weld
Code Category: B-D
Item No. B3.90
Weld ID: N-1A

Drawing of Nozzle and Limiting Configuration
(NDE Report 06UT121)

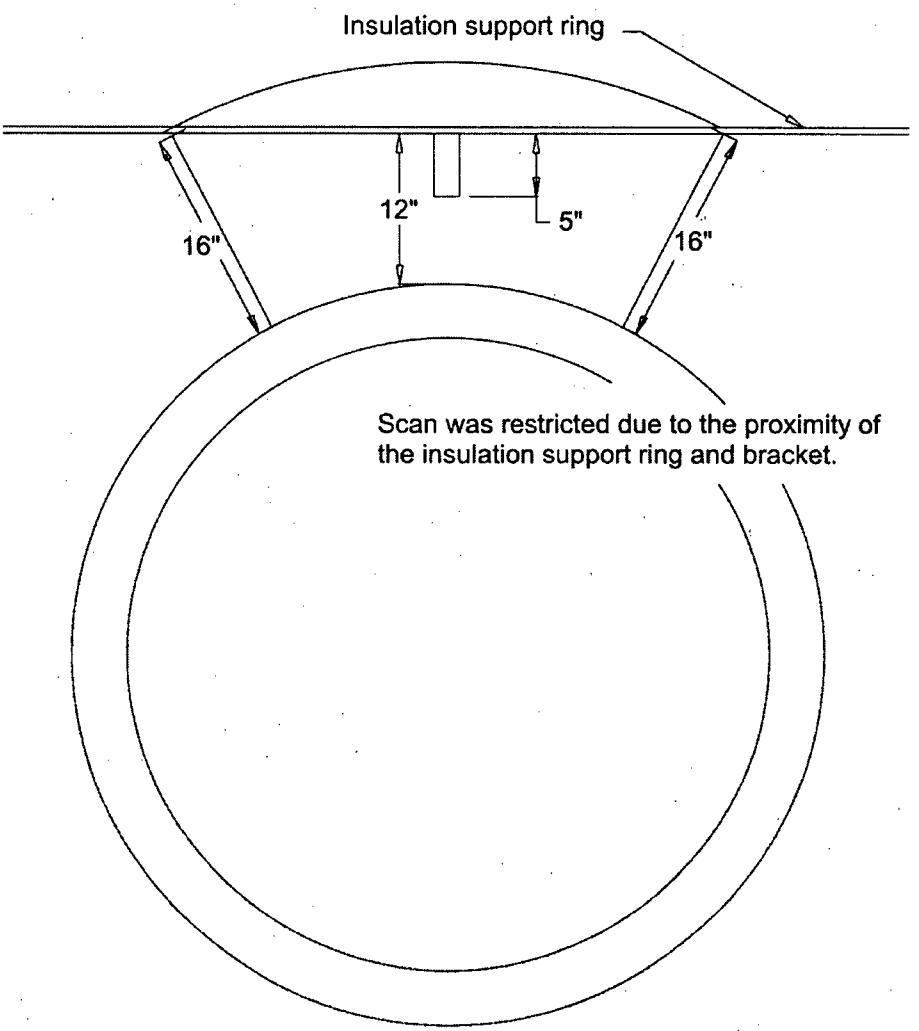

Attachment 3A

Reactor Pressure Vessel Shell – to - Nozzle Weld
Code Category: B-D
Item No. B3.90
Weld ID: N-1A

Axial Coverage Plot (25° to 335°)
(NDE Report 06UT121)

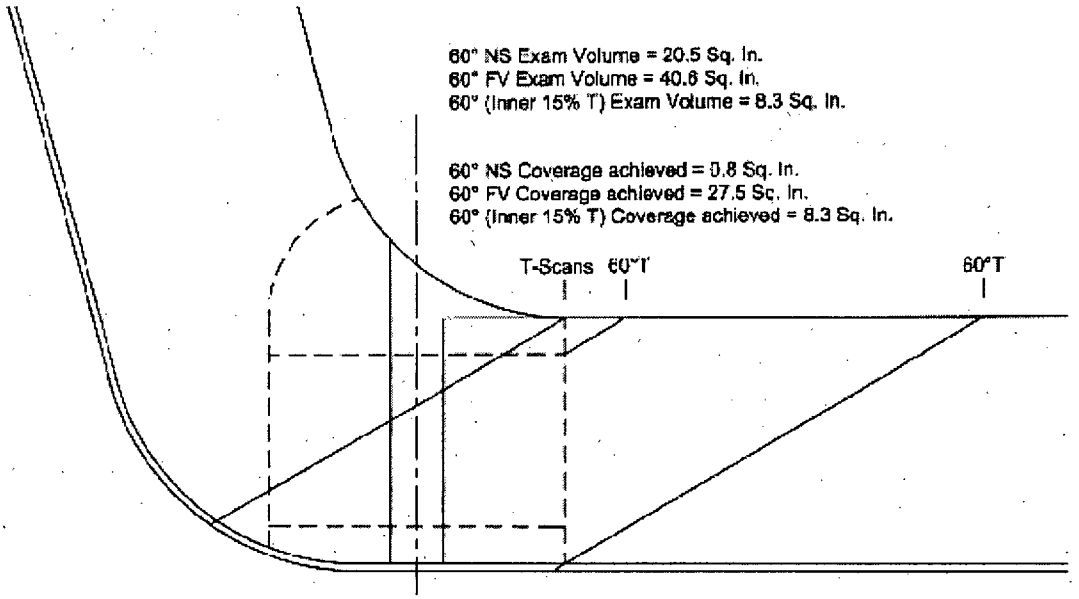

Attachment 3A

Reactor Pressure Vessel Shell – to - Nozzle Weld
Code Category: B-D
Item No. B3.90
Weld ID: N-1A

Axial Coverage Plot (335° to 25° limited by insulation support bracket)
(NDE Report 06UT121)

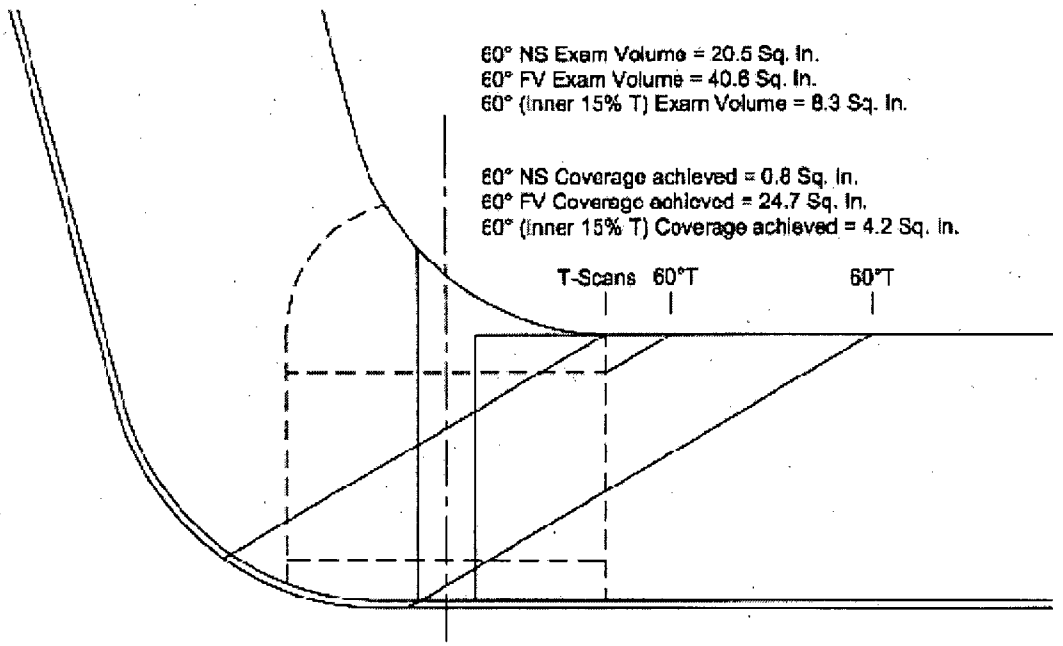

Attachment 3A

Reactor Pressure Vessel Shell – to - Nozzle Weld
Code Category: B-D
Item No. B3.90
Weld ID: N-1A

Circumferential Coverage Plot
(NDE Report 06UT121)

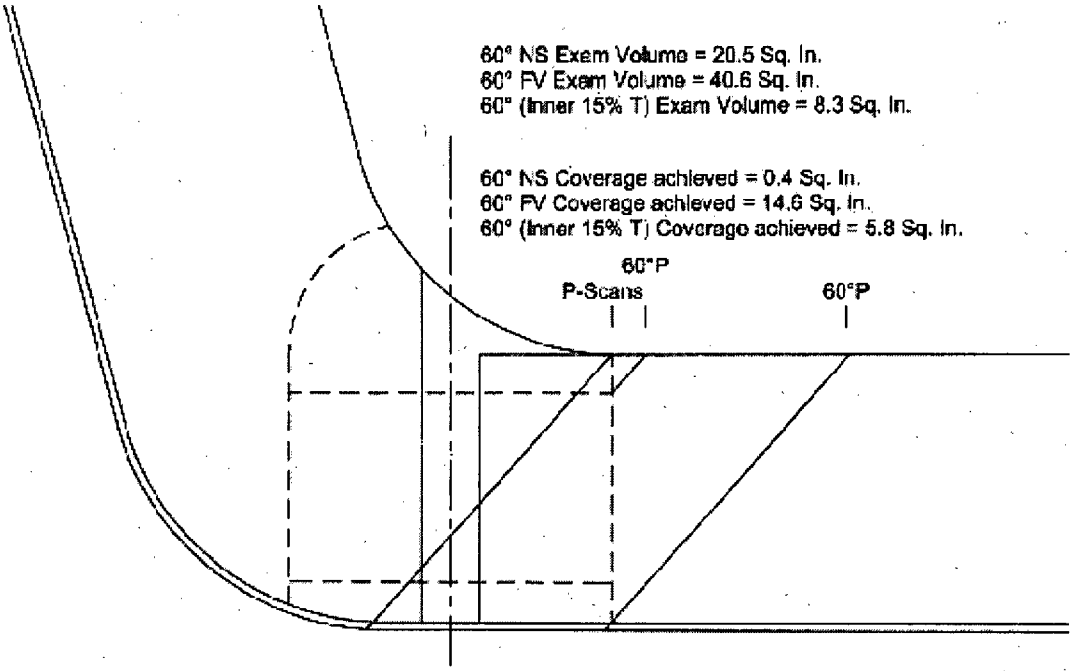

Attachment 3B

Reactor Pressure Vessel Shell – to - Nozzle Weld
Code Category: B-D
Item No. B3.90
Weld ID: N-1B

Coverage Calculation
(NDE Report # 98-JAF-UT5-012)

TYPICAL CALCULATION FOR CODE REQUIRED VOLUME
FOR N1 RECIRCULATION OUTLET NOZZLES

	EXAM. COVERAGE ACHIEVED	EXAM. COVERAGE NOT ACHIEVED	CODE REQUIRED
0°	9.0%	24%	33%
45° + 60° AX. SCANS	5.9%	27.1%	33%
45° + 60° CIRC. SCANS	9.0%	24%	33%
	23.9 %	= TOTAL PERCENTAGE OF CODE REQUIRED VOLUME ACHIEVED	

* NOTE: CALCULATIONS FOR 45° + 60° AX SCANS EXAM. COVERAGE NOT ACHIEVED, INCLUDE LIMITED COVERAGE DUE TO OD NOZZLE BLEND RADIUS GEOMETRY, LIMITED COVERAGE DUE TO INSULATION RING AND SUPPORT LUG AND LIMITED COVERAGE DUE TO MIRROR INSULATION

Attachment 3B

Reactor Pressure Vessel Shell – to - Nozzle Weld
Code Category: B-D
Item No. B3.90
Weld ID: N-1B

Drawing of Nozzle and Limiting Configuration
(NDE Report # 98-JAF-UT5-012)

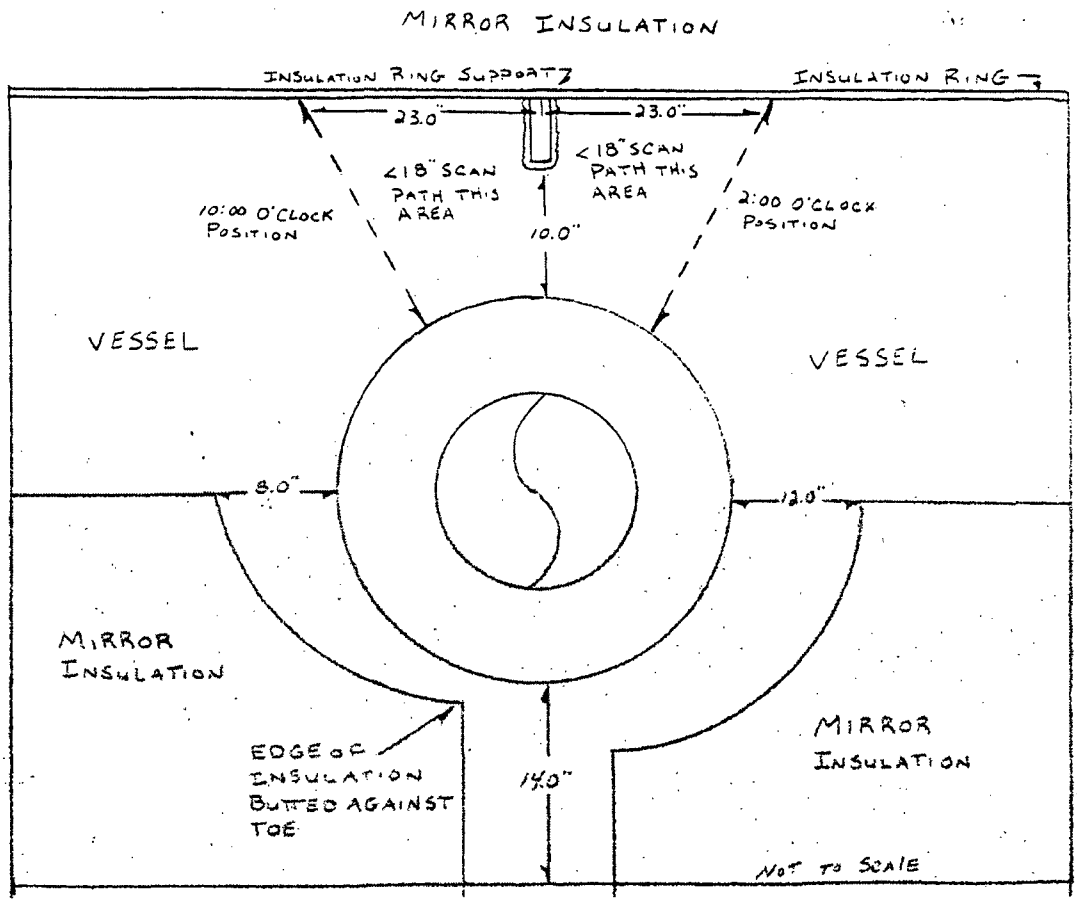

Attachment 3B

Reactor Pressure Vessel Shell – to - Nozzle Weld
Code Category: B-D
Item No. B3.90
Weld ID: N-1B

Axial Coverage Plot (Typical configuration limitation)
(NDE Report # 98-JAF-UT5-012)

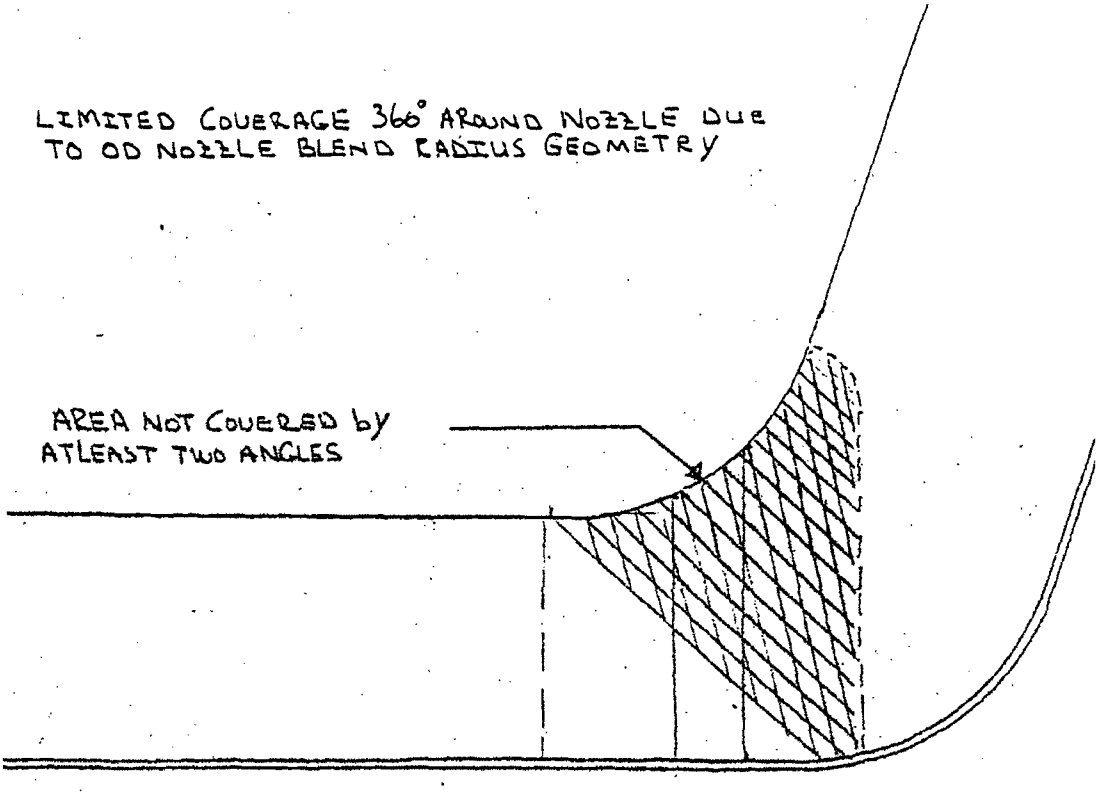

Attachment 3B

Reactor Pressure Vessel Shell – to - Nozzle Weld
Code Category: B-D
Item No. B3.90
Weld ID: N-1B

Axial Coverage Plot (Insulation ring limited coverage)
(NDE Report # 98-JAF-UT5-012)

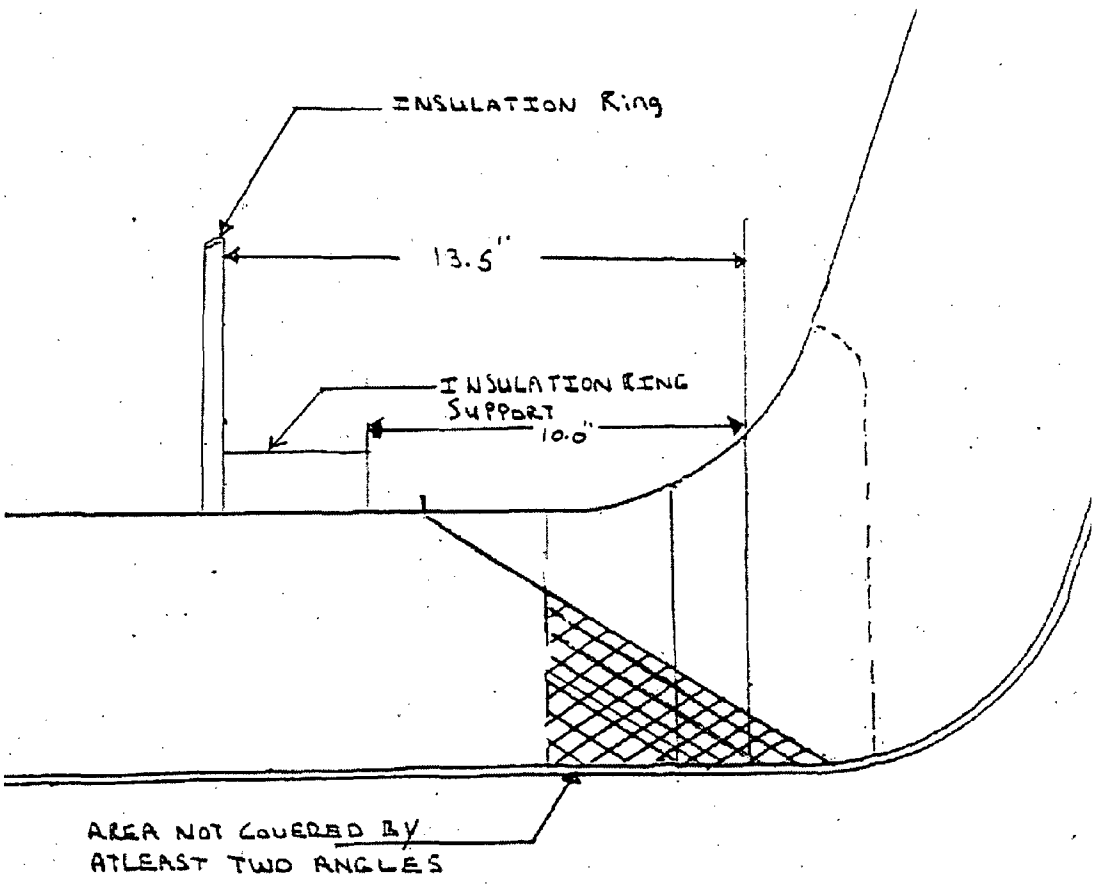

Attachment 3B

Reactor Pressure Vessel Shell – to - Nozzle Weld
Code Category: B-D
Item No. B3.90
Weld ID: N-1B

Axial Coverage Plot (Mirror insulation limited coverage)
(NDE Report # 98-JAF-UT5-012)

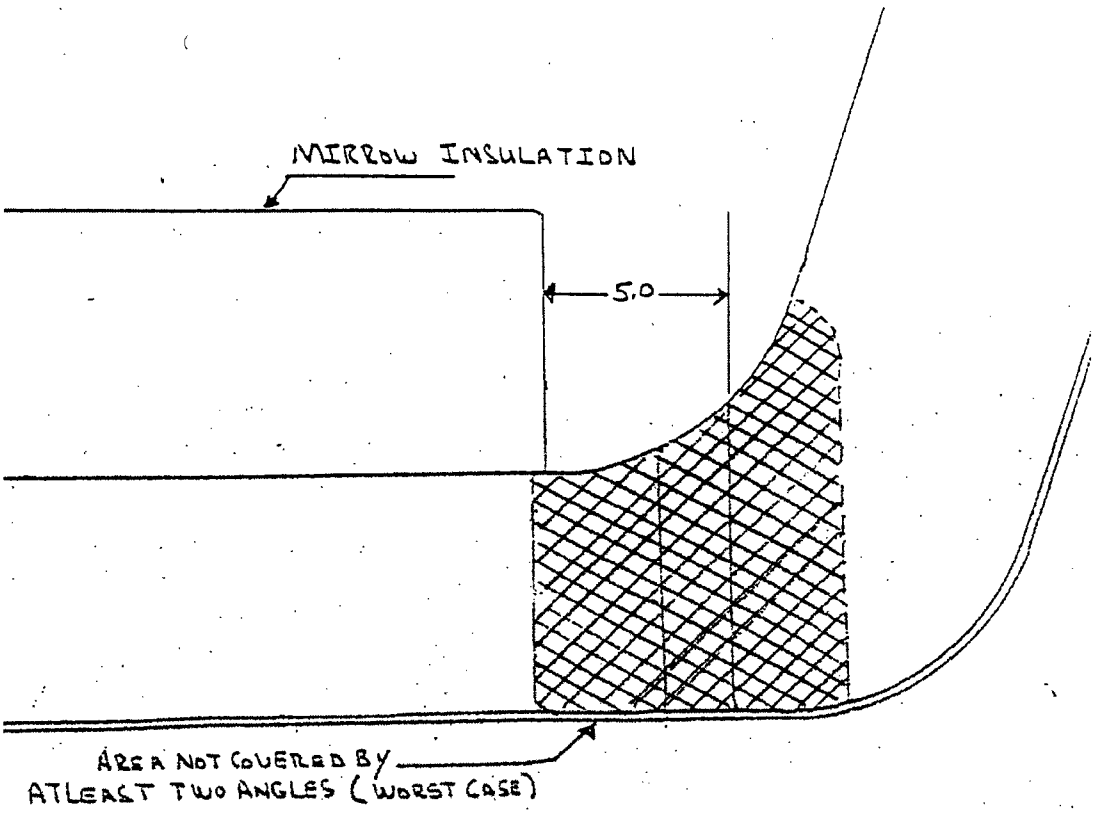

Attachment 3B

Reactor Pressure Vessel Shell - to- Nozzle Weld
Code Category: B-D
Item No. B3.90
Weld ID: N-1B

0° and Circumferential Coverage Plot
(NDE Report # 98-JAF-UT5-012)

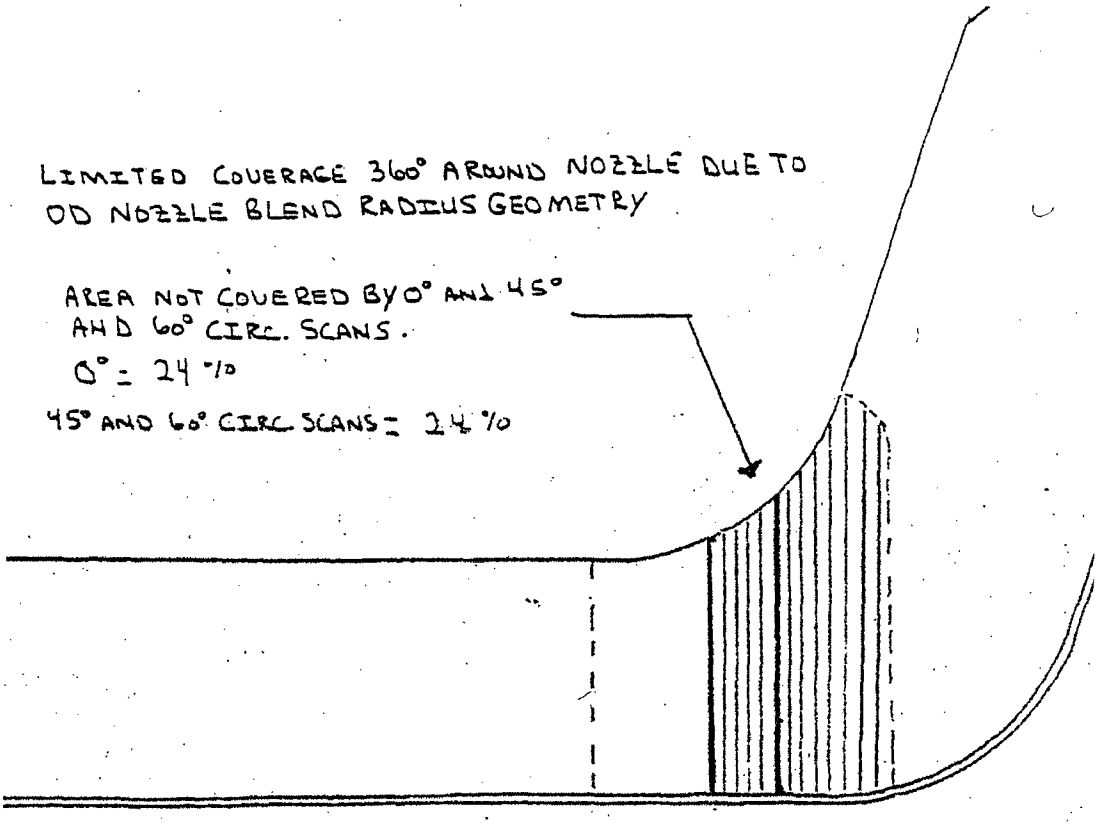

Attachment 4A

Reactor Pressure Vessel Shell – to - Nozzle Weld
Code Category: B-D
Item No. B3.90
Weld ID: N-2A, N-2B, N-2E, N-2H and N-2K
Note: Nozzles N-2A N-2B, N-2E, N-2H and N-2K were examined during the same outage, have typical configurations and limiting conditions.

Coverage Calculation
(NDE Report #'s 98-JAF-UT5-001, 98-JAF-UT5-002, 98-JAF-UT5-003, 98-JAF-UT5-004 and 98-JAF-UT5-005)

TYPICAL CALCULATIONS FOR CODE REQUIRED VOLUME FOR N2 RECIRCULATION INLET NOZZLES

	EXAM. COVERAGE ACHIEVED	EXAM. COVERAGE NOT ACHIEVED	CODE REQUIRED
0°	19.9%	13.1%	33%
45° & 60° AX. SCANS	26.3%	6.7%	33%
45° & 60° CIRC. SCANS	19.9%	13.1%	33%

66.1% = TOTAL PERCENTAGE OF CODE REQUIRED VOLUME ACHIEVED

Attachment 4A

Reactor Pressure Vessel Shell – to - Nozzle Weld
Code Category: B-D
Item No. B3.90
Weld ID: N-2A, N-2B, N-2E, N-2H and N-2K

Drawing of Nozzle and Limiting Configuration
(NDE Report #'s 98-JAF-UT5-001, 98-JAF-UT5-002, 98-JAF-UT5-003, 98-JAF-UT5-004 and 98-JAF-UT5-005)

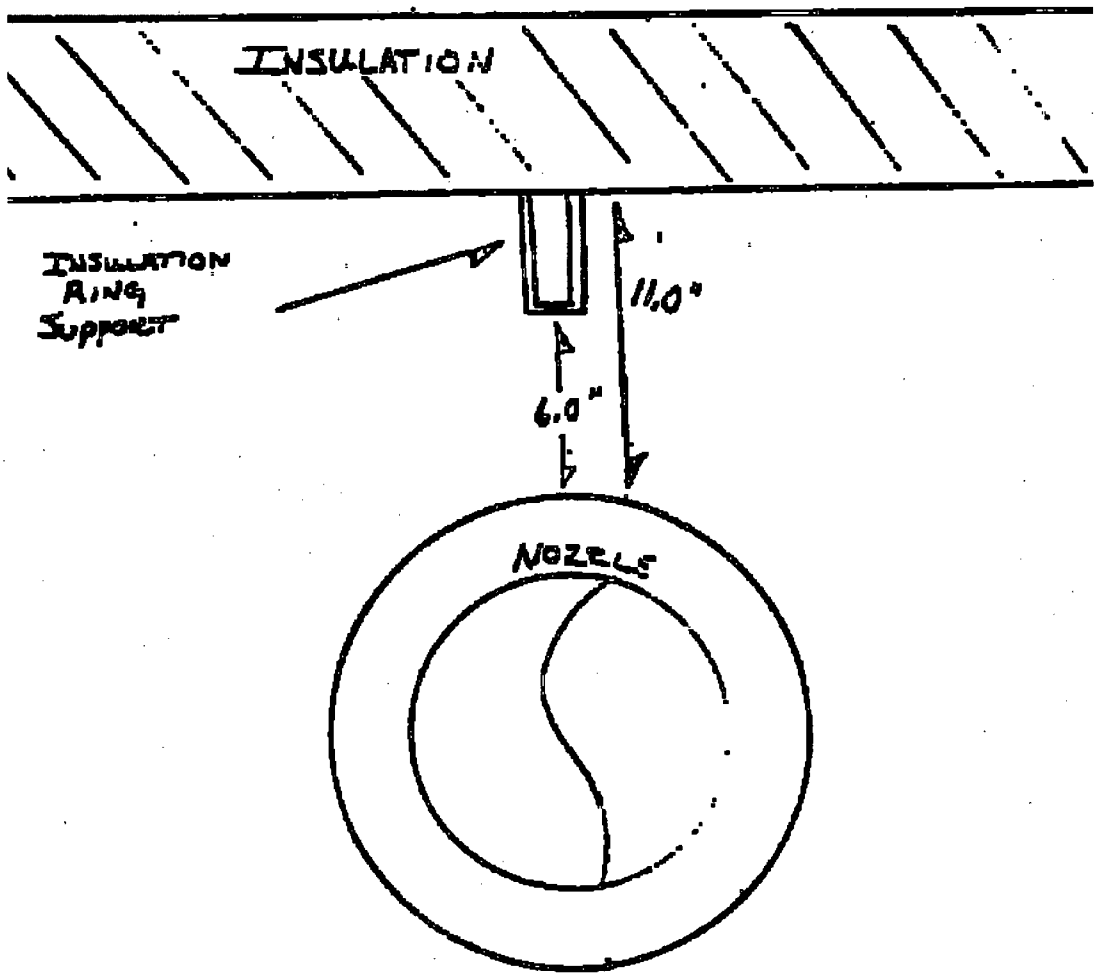

Attachment 4A

Reactor Pressure Vessel Shell – to - Nozzle Weld
Code Category: B-D
Item No. B3.90
Weld ID: N-2A, N-2B, N-2E, N-2H and N-2K

Axial Coverage Plot (Typical configuration limitation)
(NDE Report #'s 98-JAF-UT5-001, 98-JAF-UT5-002, 98-JAF-UT5-003, 98-JAF-UT5-004 and 98-JAF-UT5-005)

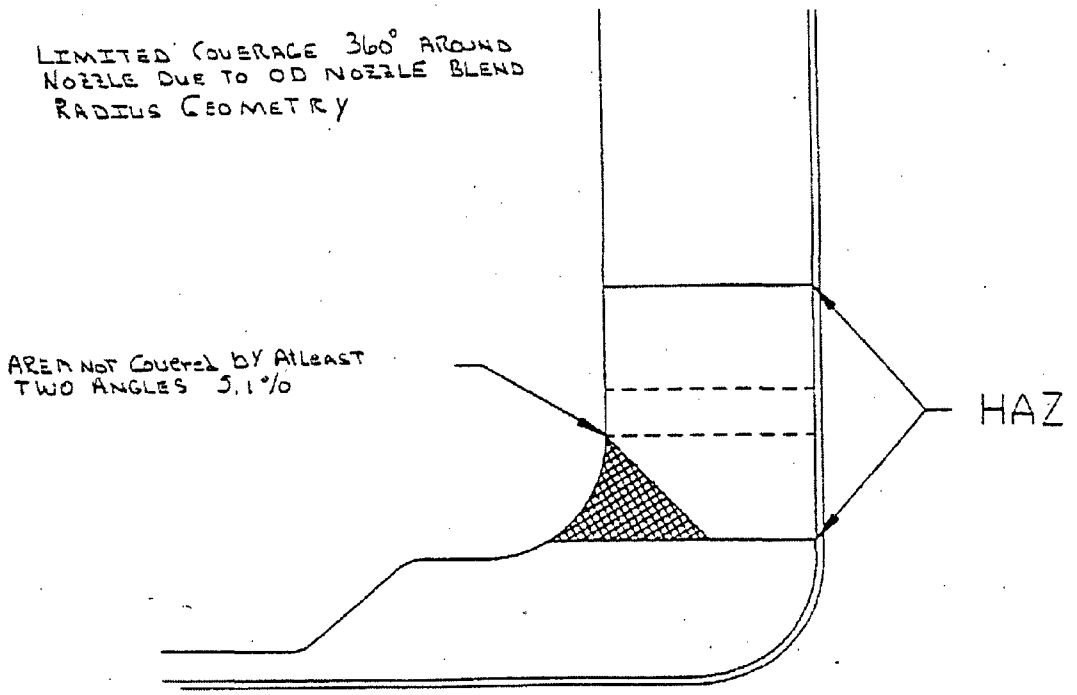

Attachment 4A

Reactor Pressure Vessel Shell – to - Nozzle Weld
Code Category: B-D
Item No. B3.90
Weld ID: N-2A, N-2B, N-2E, N-2H and N-2K

Axial Coverage Plot (Insulation support ring limited coverage)
(NDE Report #'s 98-JAF-UT5-001, 98-JAF-UT5-002, 98-JAF-UT5-003, 98-JAF-UT5-004 and 98-JAF-UT5-005)

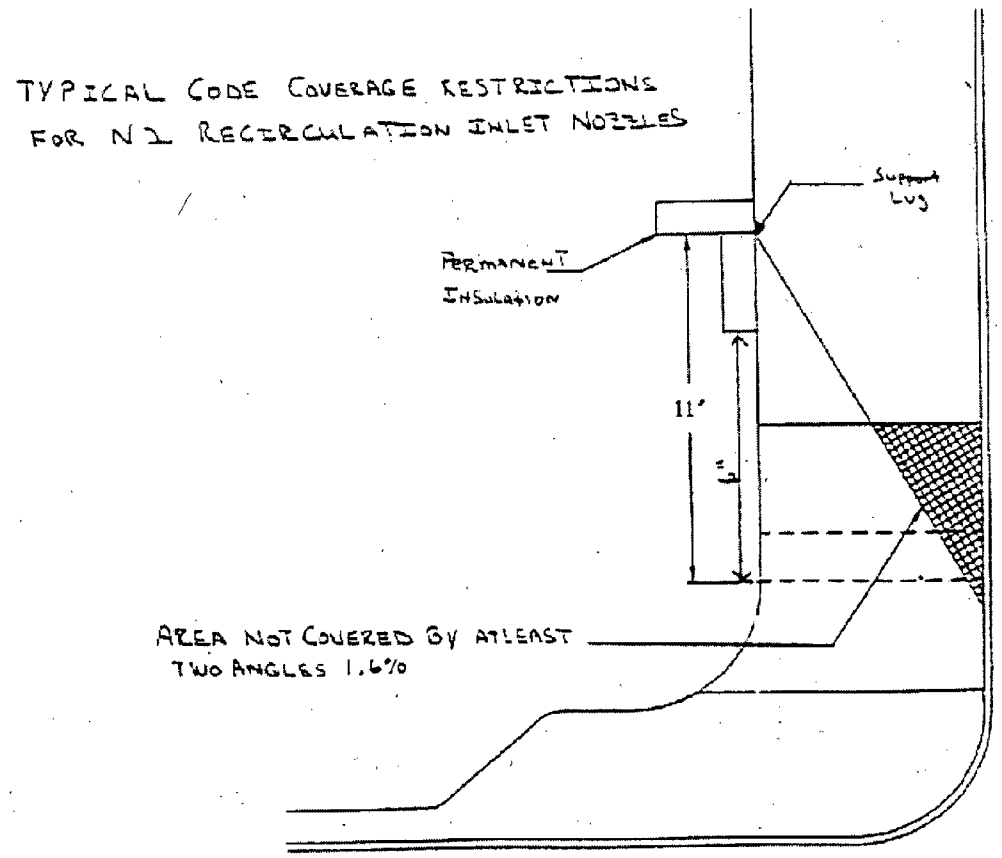

Attachment 4A

Reactor Pressure Vessel Shell – to - Nozzle Weld
Code Category: B-D
Item No. B3.90
Weld ID: N-2A, N-2B, N-2E, N-2H and N-2K

0° and Circumferential Coverage Plot
(NDE Report #'s 98-JAF-UT5-001, 98-JAF-UT5-002, 98-JAF-UT5-003, 98-JAF-UT5-004 and 98-JAF-UT5-005)

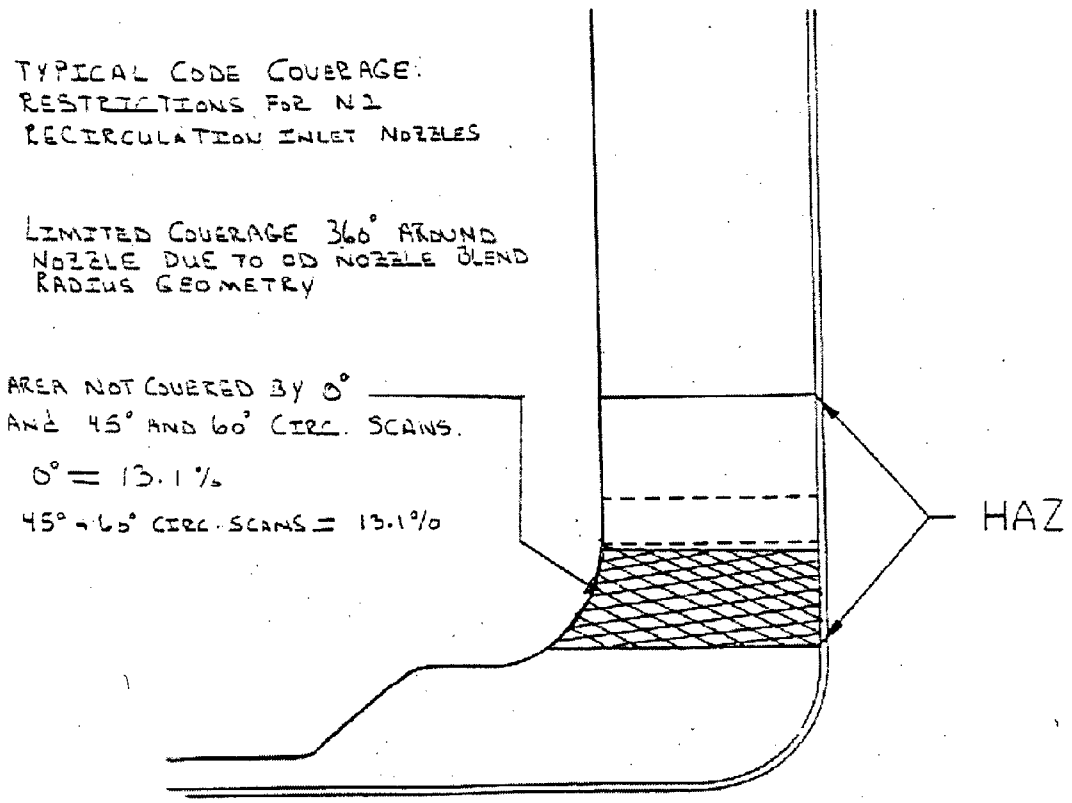

Attachment 4B

Reactor Pressure Vessel Shell – to - Nozzle Weld
Code Category: B-D
Item No. B3.90
Weld ID: N-2F

Total Volume Calculation
(NDE Report # 02UT017)

BASE METAL VOLUME

Area 1
Area = A, B, C
Area = ½ (b x h)
Area = ½ (0.90" x 1.75")
Area = ½ (1.58^{in2})
Area = 0.79^{in2}

Area 2
Area = B, C, D, E
Area = b x h
Area = 1.75" x 3.50"
Area = 6.13^{in2}

Area 3
Area = F, G, H, I
Area = b x h
Area = 1.75" x 3.50"
Area = 6.13^{in2}

TOTAL BASE METAL CODE REQUIRED VOLUME

Area 1 + 2 + 3
Area = 0.79^{in2} + 6.13^{in2} + 6.13^{in2}
Area = 13.05^{in2}

WELD METAL VOLUME

Area 4
Area = D, E, F, G
Area = b x h
Area = 0.75" x 3.50"
Area = 2.63^{in2}

TOTAL WELD REQUIRED VOLUME

Area = 1 + 2 + 3 + 4
Area = 0.79^{in2} + 6.13^{in2} + 6.13^{in2} + 2.63^{in2}
Area = 15.68^{in2}

Attachment 4B

Reactor Pressure Vessel Shell – to - Nozzle Weld
Code Category: B-D
Item No. B3.90
Weld ID: N-2F

Axial Coverage Calculation
(NDE Report # 02UT017)

BASE METAL COVERAGE 2 ANGLES ONE DIRECTION

Area 5
Area = J, K, L
Area = ½ (b x h)
Area = ½ (1.75" x 1.60")
Area = ½ (2.80"²)
Area = 1.40"²

Area 6
Area = K, L, M, N
Area = b x h
Area = 1.75" x 1.90"
Area = 3.33"²

TOTAL BASE METAL COVERAGE

Area = 3 + 5 + 6
Area = 6.13"² + 1.40"² + 3.33"²
Area = 10.85"²

% BASE METAL COVERAGE

Percentage = Base Metal Coverage ÷ Total Base Metal Volume
Percentage = 10.85"² ÷ 13.05"²
Percentage = 0.8314 or 83.14% Scanned

TOTAL WELD METAL COVERAGE

Area 4
Area = 2.63"² x 2 Directions
Area = 5.26"² Total weld metal volume
Area = 2.63"² One direction ÷ 5.26"²
Area = 0.50 or 50% Scanned

Attachment 4B

Reactor Pressure Vessel Shell – to - Nozzle Weld
Code Category: B-D
Item No. B3.90
Weld ID: N-2F

0°, Circumferential and Total Coverage Calculation (NDE Report # 02UT017)

0° BASE METAL COVERAGE

Area = 3 ÷ Total Base Metal Volume
Area = 6.13"² ÷ 13.05"²
Area = 0.4697 or 46.97% Scanned

0° WELD METAL COVERAGE

Area = 4 ÷ Total Weld Metal Volume
Area = 5.26"² ÷ 5.26"²
Area = 1.0 or 100% Scanned

45°& 60° BASE METAL COVERAGE CW

Area = 3 ÷ Total Base Metal Volume
Area = 6.13"² ÷ 13.05"²
Area = 0.4697 or 46.97% Scanned

45°& 60° BASE METAL COVERAGE CCW

Area = 4 ÷ Total Base Metal Volume
Area = 6.13"² ÷ 13.05"²
Area = 0.4697 or 46.97% Scanned

45°& 60° WELD METAL COVERAGE CW

Area = 4 ÷ Total Weld Metal Volume
Area = 5.26"² ÷ 5.26"²
Area = 1.0 or 100% Scanned

45°& 60° WELD METAL COVERAGE CCW

Area = 4 ÷ Total Weld Metal Volume
Area = 5.26"² ÷ 5.26"²
Area = 1.0 or 100% Scanned

TOTAL WELD REQUIRED VOLUME SCANNED

0° =	100.00%
45° & 60° CW =	100.00%
45° & 60° CCW =	100.00%
2 ANGLES FORWARD =	100.00%
2 ANGLES BACK =	0.00%
	400.00%

400.00% ÷ 5 Scans = 80.00% Total Weld Required Volume Scanned

TOTAL BASE METAL REQUIRED VOLUME SCANNED

0° =	46.97%
45° & 60° CW =	46.97%
45° & 60° CCW =	46.97%
2 ANGLES FORWARD =	83.14%
	224.05%

224.05% ÷ 4 Scans = 56.01% Total Weld Required Volume Scanned

TOTAL REQUIRED VOLUME SCANNED ALL ANGLES

Total Weld Required Volume Scanned + Total Base Metal Volume Scanned
80.00% + 56.01% = 136.01% ÷ 2 = 68.00% Total Required Volume Scanned All Angles

Attachment 4B

Reactor Pressure Vessel Shell – to - Nozzle Weld
Code Category: B-D
Item No. B3.90
Weld ID: N-2F

Coverage Plot (Total Volume)
(NDE Report # 02UT017)

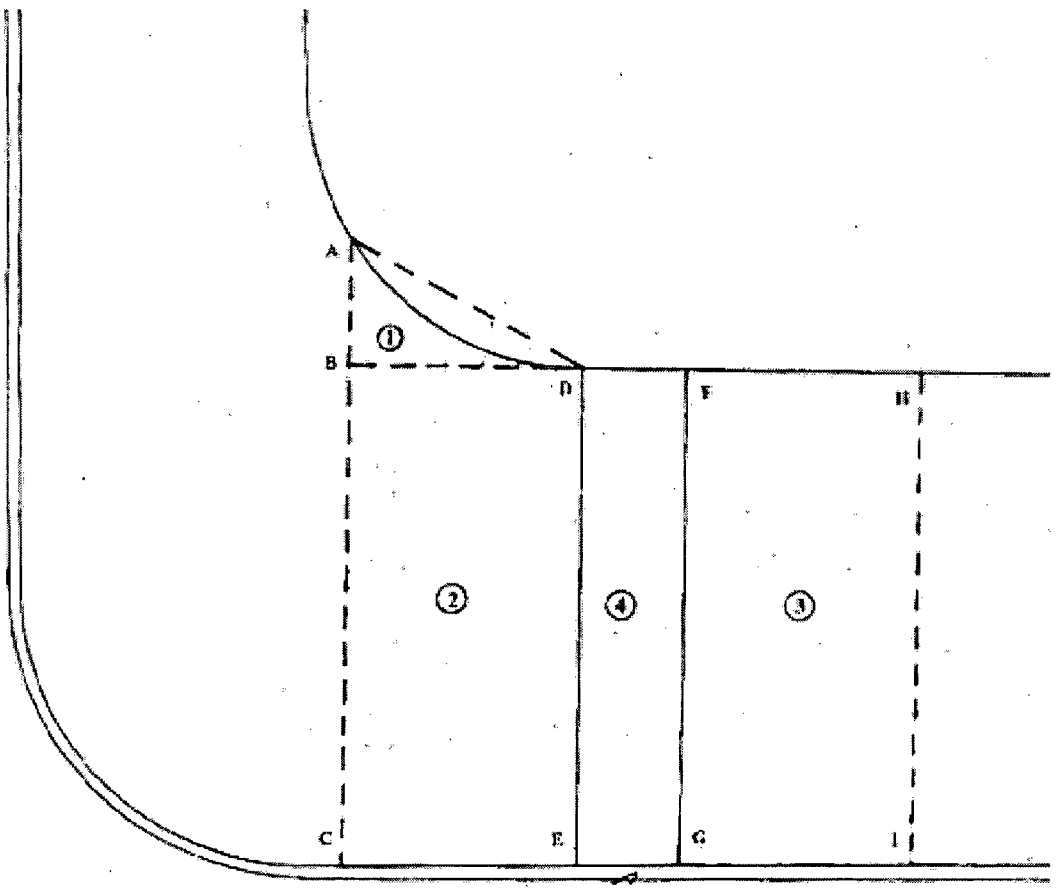

Attachment 4B

Reactor Pressure Vessel Shell – to - Nozzle Weld
Code Category: B-D
Item No. B3.90
Weld ID: N-2F

Axial Coverage Plot
(NDE Report # 02UT017)

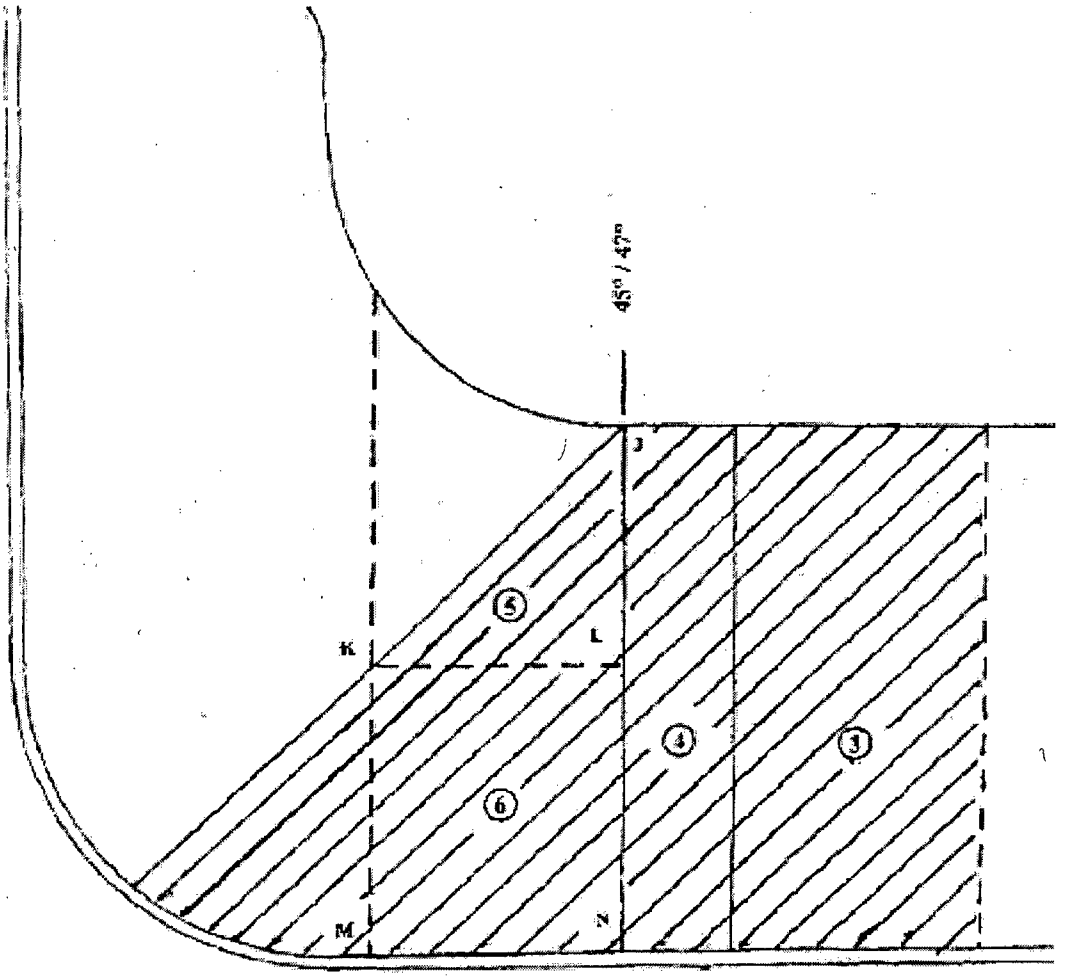

Attachment 4B

Reactor Pressure Vessel Shell – to - Nozzle Weld
Code Category: B-D
Item No. B3.90
Weld ID: N-2F

0°, Circumferential Coverage Plot
(NDE Report # 02UT017)

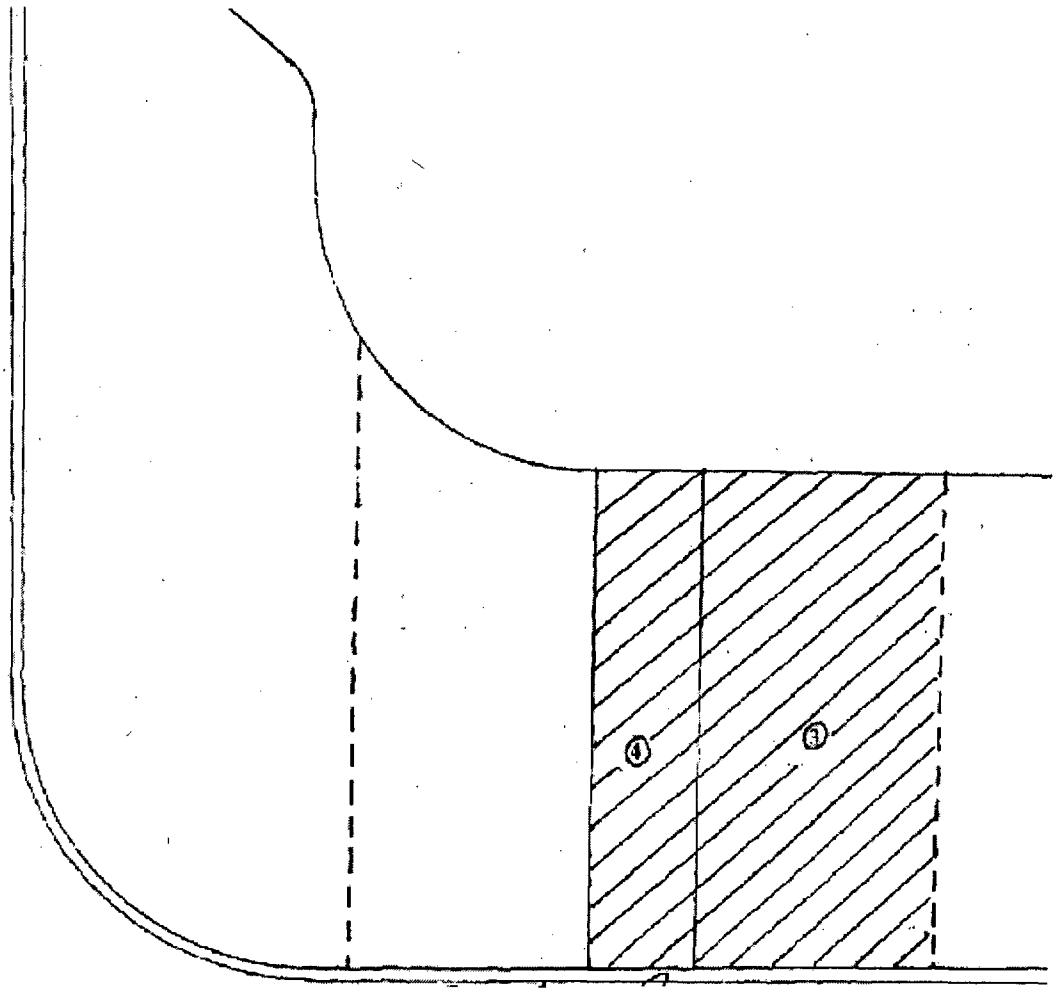

Attachment 4C

Reactor Pressure Vessel Shell – to - Nozzle Weld
Code Category: B-D
Item No. B3.90
Weld ID: N-2C, N-2D, N-2G, and N-2J
Note: Nozzles N-2C, N-2D, N-2G and N-2J were examined during the same outage, have typical configurations and limiting conditions.

Coverage Calculation
(NDE Report 06UT123, 06UT125, 06UT127 and 06UT129)

		CODE CROSS-SECTIONAL AREA		TOTAL CODE COVERAGE		
Weld Length = 360. Exam Volume = 69.3		Required Exam Area Sq. In.	Area Scanned Manual	Percent of Area Manual	Weld Length Manual	Percent Manual
60° NS T-Scan	A	10.1	5.8	9.8%	360	4.9%
60° S6 T-Scan	A	40.6	39.8	67.1%	350	32.6%
60° S4 T-Scan	A	8.6	8.6	14.5%	350	7.0%
60° NS P-Scan	A	10.1	5.2	8.8%	360	4.4%
60° S6 P-Scan	A	40.6	34.1	57.5%	360	28.8%
60° S4/IRS Scan	A	8.6	8.6	14.5%	360	7.3%
60° NS T-Scan						
60° S6 T-Scan	B	40.6	32.2	54.3%	10	0.8%
60° S4 T-Scan	B	8.6	6.2	10.5%	10	0.1%
60° NS P-Scan						
60° S6 P-Scan						
60°S4/IRS Scan						
				% Total Composite Coverage =		85.9%

Attachment 4C

Reactor Pressure Vessel Shell – to - Nozzle Weld
Code Category: B-D
Item No. B3.90
Weld ID: N-2C, N-2D, N-2G, and N-2J

Axial Coverage Plot @ 5° to 355°
(NDE Report 06UT123, 06UT125, 06UT127 and 06UT129)

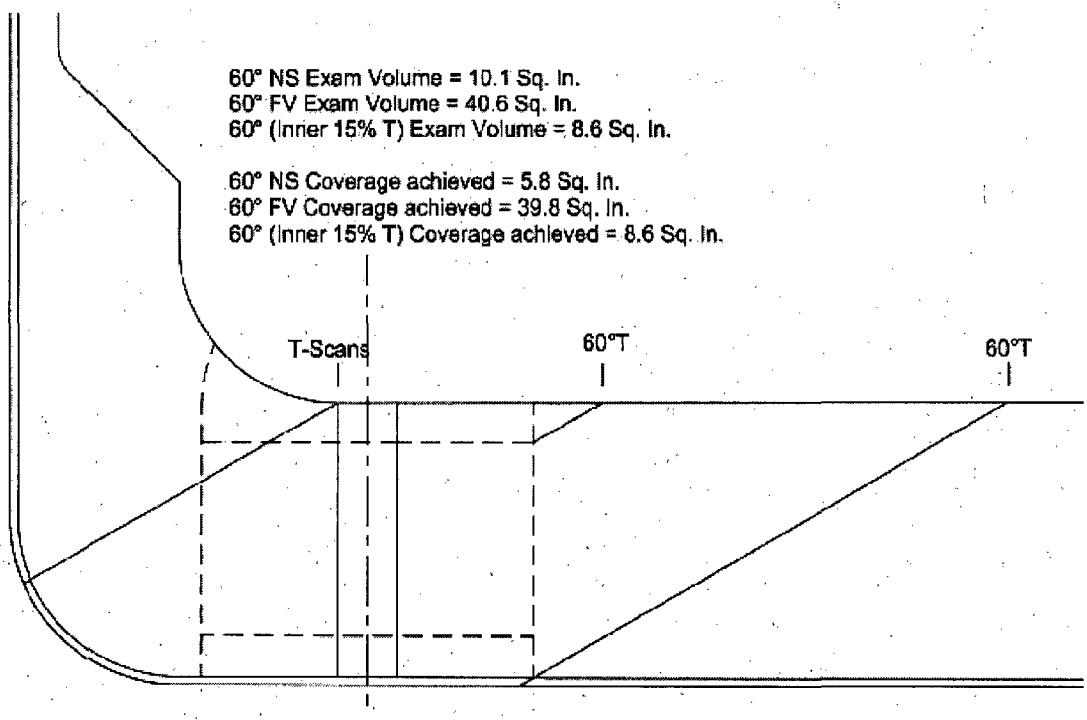

Attachment 4C

Reactor Pressure Vessel Shell – to - Nozzle Weld
Code Category: B-D
Item No. B3.90
Weld ID: N-2C, N-2D, N-2G, and N-2J

Axial Coverage Plot @ 355° to 5° (Limited by insulation support bracket)
(NDE Report 06UT123, 06UT125, 06UT127 and 06UT129)

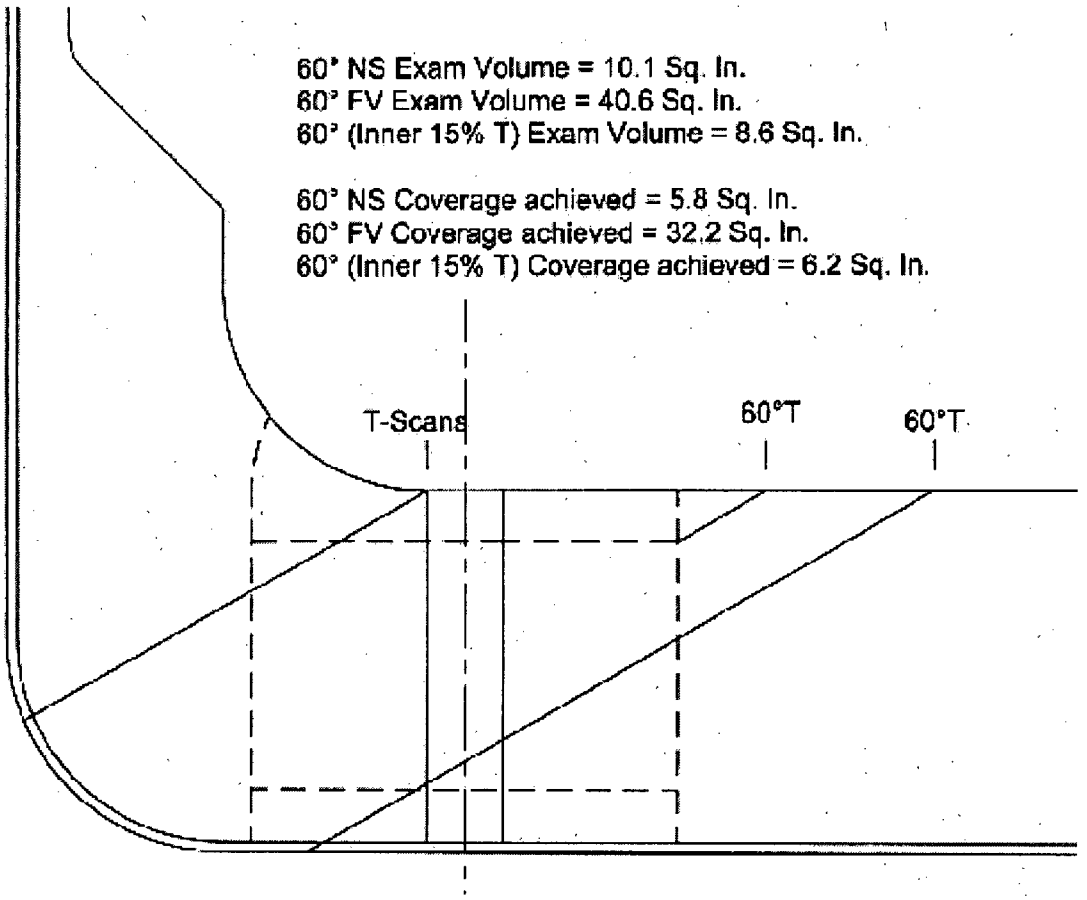

Attachment 4C

Reactor Pressure Vessel Shell – to - Nozzle Weld
Code Category: B-D
Item No. B3.90
Weld ID: N-2C, N-2D, N-2G, and N-2J

Circumferential Coverage Plot
(NDE Report 06UT123, 06UT125, 06UT127 and 06UT129)

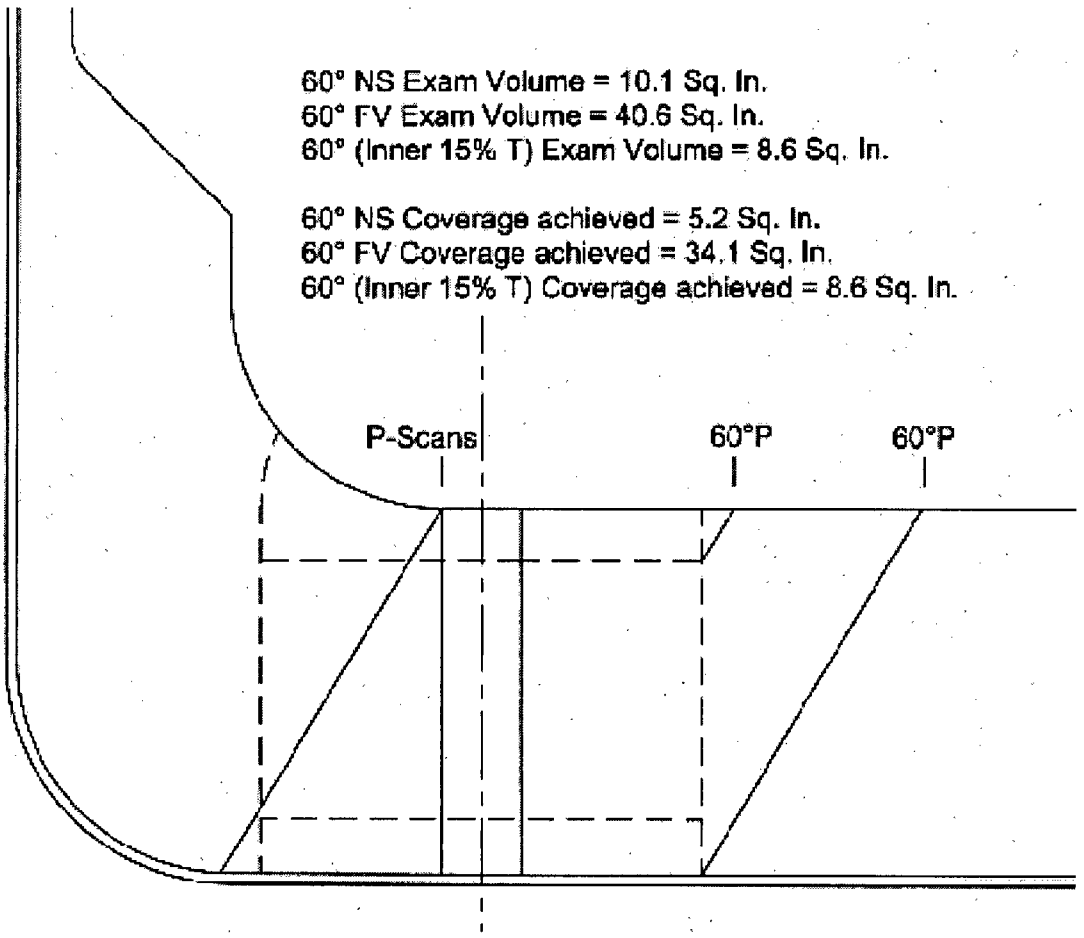

Attachment 5A

Reactor Pressure Vessel Shell - to- Nozzle Weld
Code Category: B-D
Item No. B3.90
Weld ID: N-3A & N-3B

Coverage Calculation
(NDE Report 06UT135 and 06UT137)

		CODE CROSS-SECTIONAL AREA		TOTAL CODE COVERAGE		
Weld Length =	360.	Required Exam Area Sq. In.	Area Scanned Manual	Percent of Area Manual	Weld Length Manual	Percent Manual
Exam Volume =	53.7					
60° NS T-Scan	A	17.7	0.6	1.1%	360	0.6%
60° S6 T-Scan	A	29.5	19.7	36.7%	360	18.3%
60° S4 T-Scan	A	3.5	6.5	12.1%	360	6.1%
60° NS P-Scan	A	17.7	0.2	0.4%	360	0.2%
60° S6 P-Scan	A	29.5	8.0	14.9%	360	7.4%
60° S4/IRS Scan	A	6.5	3.2	6.0%	360	3.0%
60° NS T-Scan						
60° S6 T-Scan						
60° S4 T-Scan						
60° NS P-Scan						
60° S6 P-Scan						
60°S4/IRS Scan						
				% Total Composite Coverage =		35.6%

Attachment 5A

Reactor Pressure Vessel Shell – to - Nozzle Weld
Code Category: B-D
Item No. B3.90
Weld ID: N-3A & N-3B

Axial Coverage Plot
(NDE Report 06UT135 and 06UT137)

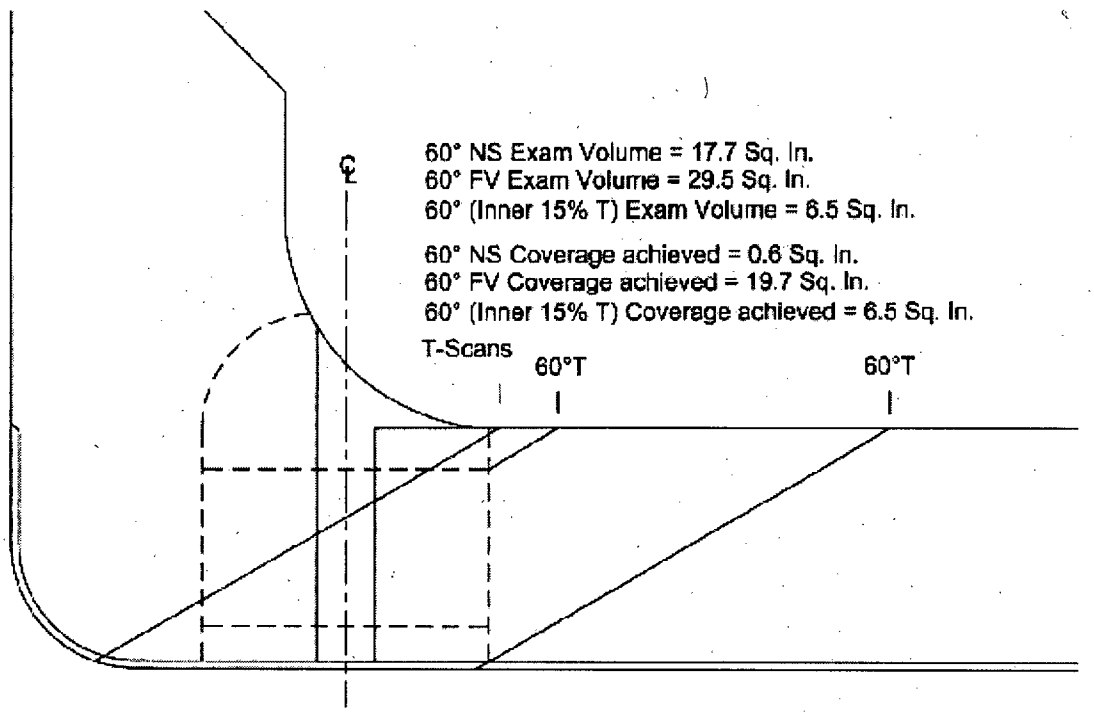

Attachment 5A

Reactor Pressure Vessel Shell – to - Nozzle Weld
Code Category: B-D
Item No. B3.90
Weld ID: N-3A & N-3B

Circumferential Coverage Plot
(NDE Report 06UT135 and 06UT137)

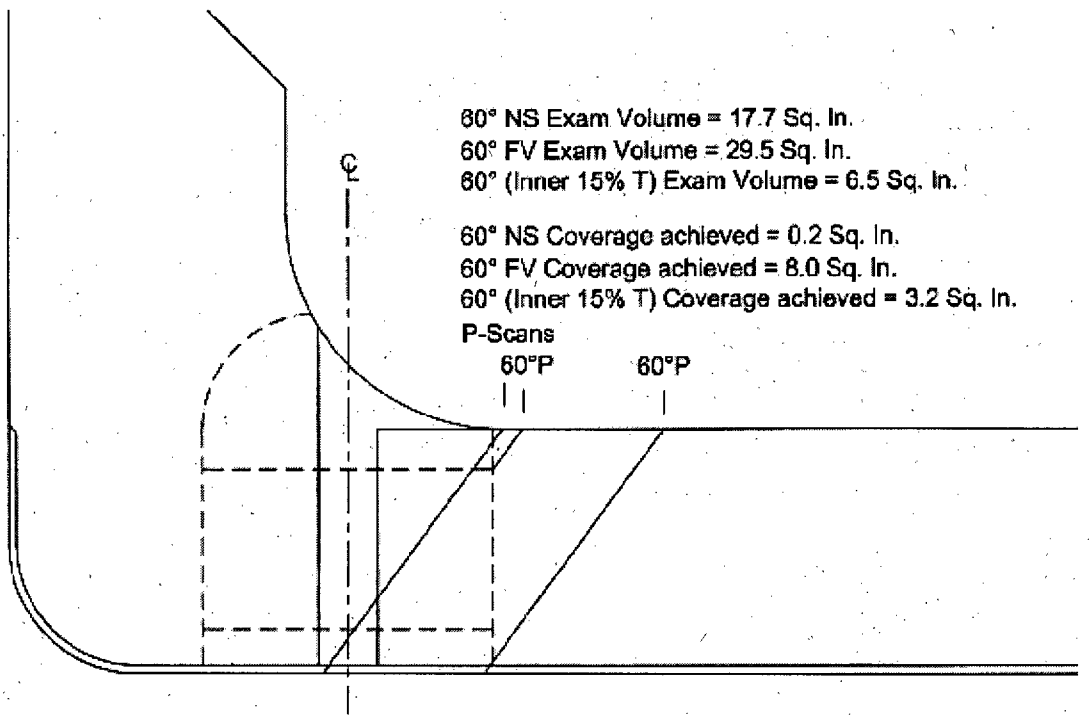

Attachment 5B

Reactor Pressure Vessel Shell – to - Nozzle Weld
Code Category: B-D
Item No. B3.90
Weld ID: N-3C & N-3D

Coverage Calculation
(NDE Report #'s 98-JAF-UT5-013, 98-JAF-UT5-014)

TYPICAL CALCULATION FOR CODE REQUIRED VOLUME
FOR N

	EXAM. COVERAGE ACHIEVED	EXAM. COVERAGE NOT ACHIEVED	CODE REQUIRED
0°	13.6%	19.4%	33%
45° + 60° LL. SCANS	19.1%	13.9%	33%
45° + 60° CIRC. SCANS	13.6%	19.4%	33%
	46.3%	= TOTAL PERCENTAGE OF CODE REQUIRED VOLUME ACHIEVED	

Attachment 5B

Reactor Pressure Vessel Shell – to - Nozzle Weld
Code Category: B-D
Item No. B3.90
Weld ID: N-3C & N-3D

Axial Coverage Plot
(NDE Report #'s 98-JAF-UT5-013, 98-JAF-UT5-014)

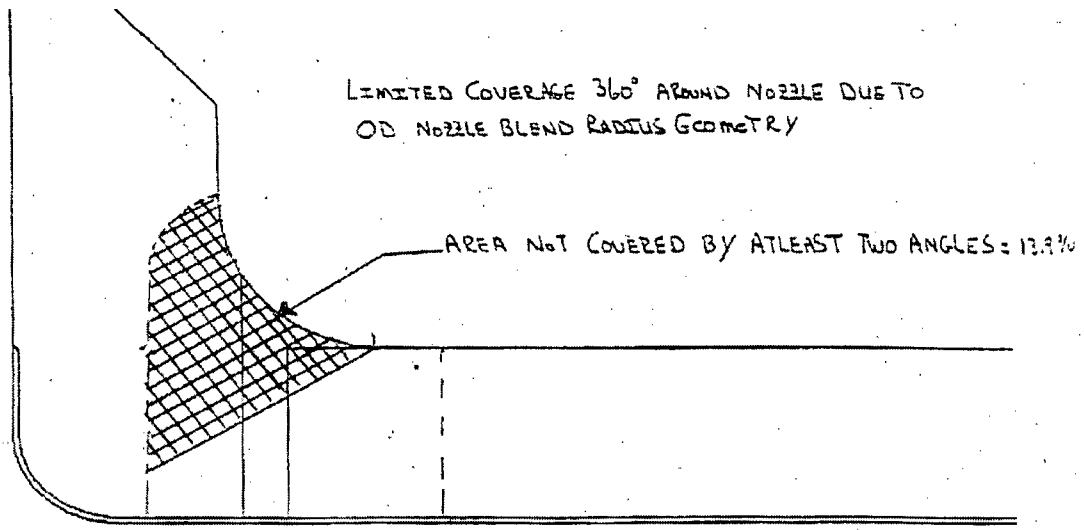

Attachment 5B

Reactor Pressure Vessel Shell – to - Nozzle Weld
Code Category: B-D
Item No. B3.90
Weld ID: N-3C & N-3D

Circumferential Coverage Plot
(NDE Report #'s 98-JAF-UT5-013, 98-JAF-UT5-014)

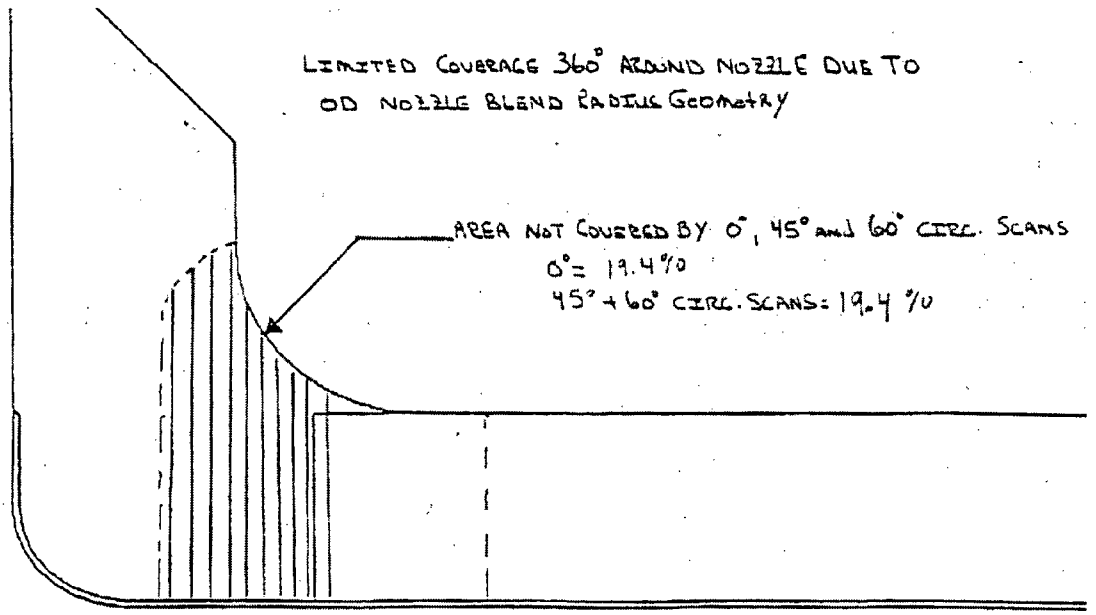

Attachment 6A

Reactor Pressure Vessel Shell – to - Nozzle Weld
Code Category: B-D
Item No. B3.90
Weld ID: N-4A and N-4C – Feedwater Nozzles

Coverage Calculation (Typical for N-4A and N-4C)
(Reference NDE Reports 02UT059 to 02UT070)

BEAM DIRECTION	0		45 Shear		60 Shear			
	WELD	VOLUME	WELD	VOLUME	WELD	VOLUME	WELD	VOLUME
0 Degree	62	55	N/A	N/A	N/A	N/A	N/A	N/A
Perp. Toward	N/A	N/A	68	73	73	83		
Perp. Away	N/A	N/A	0	NR	0	NR		
CW	N/A	N/A	50	54	50	54		
CCW	N/A	N/A	50	54	50	54		
AVERAGE	59		50		52			

Combined Average **53**

Comments: NR= Heat Affected Zone need only be scanned by two angle beams in any direction.
Break downs above are calculated by areas calculated in autocad (see plot sheet).
An additional limitation was encountered from the N11A nozzle limiting the scan by 17" or 21% of the weld. This brings the total combined average of 53 (53 X .79) to 42% Code Coverage.

TOTAL AVERAGE **42**

Attachment 6A

Reactor Pressure Vessel Shell – to - Nozzle Weld
Code Category: B-D
Item No. B3.90
Weld ID: N-4A and N-4C – Feedwater Nozzles

Drawing of Nozzle and Limiting Configuration
(Typical for N-4A and N-4C)
(Reference NDE Reports 02UT059 to 02UT070)

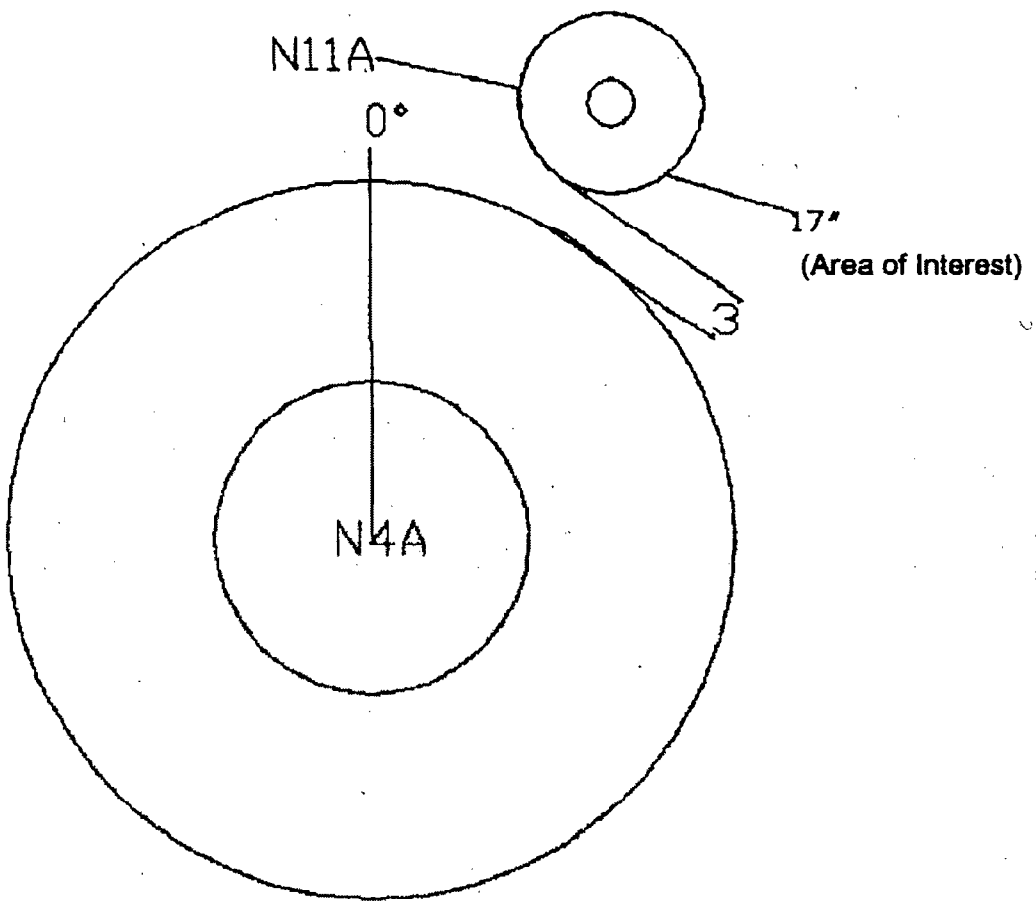

Attachment 6A

Reactor Pressure Vessel Shell – to - Nozzle Weld
Code Category: B-D
Item No. B3.90
Weld ID: N-4A and N-4C – Feedwater Nozzles

Coverage Plot (Typical for N-4A and N-4C)
(Reference NDE Reports 02UT059 to 02UT070)

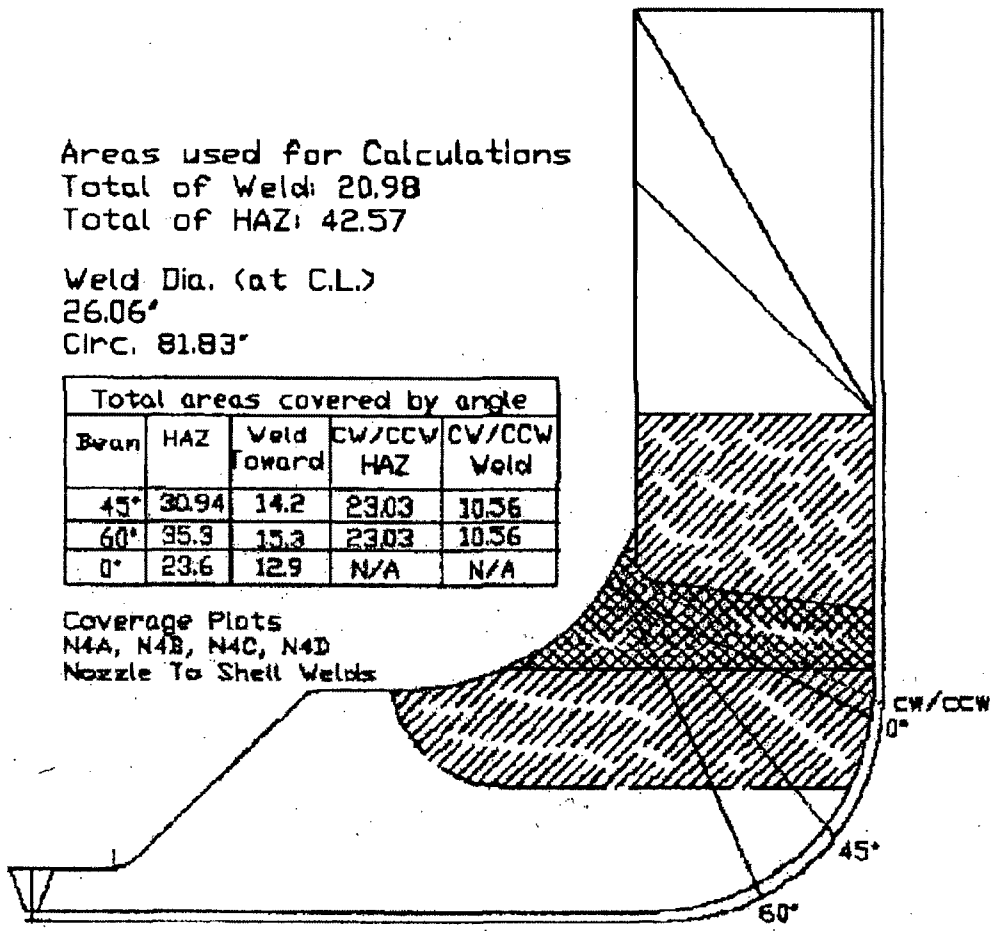

Total areas covered by angle				
Beam	HAZ	Weld Toward	CW/CCW HAZ	CW/CCW Weld
45°	30.94	14.2	23.03	10.56
60°	35.3	15.3	23.03	10.56
0°	23.6	12.9	N/A	N/A

Attachment 6B

Reactor Pressure Vessel Shell – to - Nozzle Weld
Code Category: B-D
Item No. B3.90
Weld ID: N-4B and N-4D – Feedwater Nozzles

Coverage Calculation (Typical for N-4B and N-4D)
(Reference NDE Reports 02UT059 to 02UT070)

BEAM DIRECTION	0		45 Shear		60 Shear			
	WELD	VOLUME	WELD	VOLUME	WELD	VOLUME	WELD	VOLUME
0 Degree	62	55	N/A	N/A	N/A	N/A	N/A	N/A
Perp. Toward	N/A	N/A	68	73	73	83		
Perp. Away	N/A	N/A	0	NR	0	NR		
CW	N/A	N/A	50	54	50	54		
CCW	N/A	N/A	50	54	50	54		
AVERAGE	59		50		52			

Combined Average 53

Comments: NR= Heat Affected Zone need only be scanned by two angle beams in any direction.
Break downs above are calculated by areas calculated in autocad (see plot sheet).

TOTAL AVERAGE 53

Attachment 6B

Reactor Pressure Vessel Shell – to - Nozzle Weld
Code Category: B-D
Item No. B3.90
Weld ID: N-4B and N-4D – Feedwater Nozzles

Coverage Plot (Typical for N-4B and N-4D)
(Reference NDE Reports 02UT059 to 02UT070)

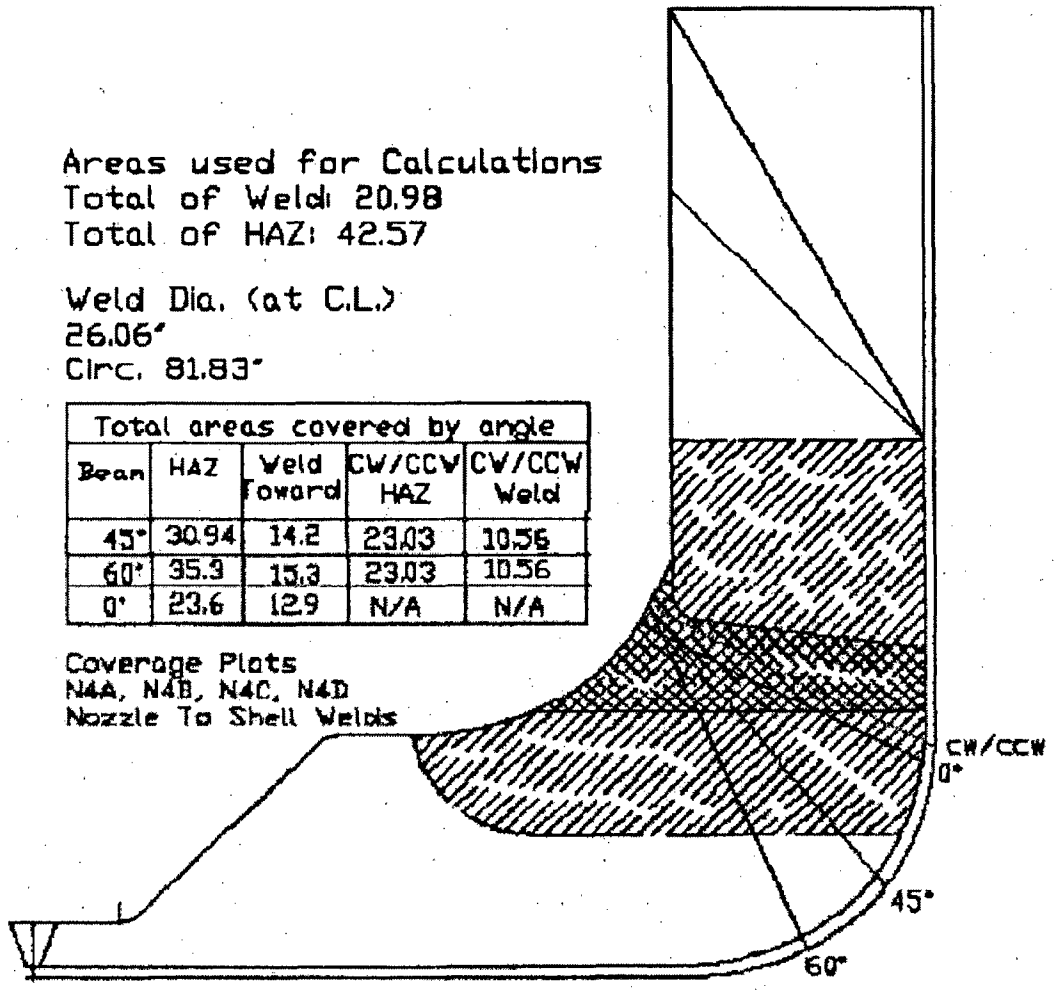

Total areas covered by angle				
Beam	HAZ	Weld Toward	CW/CCW HAZ	CW/CCW Weld
45°	30.94	14.2	23.03	10.56
60°	35.3	15.3	23.03	10.56
0°	23.6	12.9	N/A	N/A

Attachment 7A

Reactor Pressure Vessel Shell – to - Nozzle Weld
Code Category: B-D
Item No. B3.90
Weld ID: N-5A Core Spray Nozzle

Total Volume Calculation
(NDE Report RO14-UT-023)

Area = A+B+C
Area = ½ (b x h)
Area = ½ (0.20" x 0.60")
Area = ½ (.12"²)
Area = 0.06"²

Area = D+B+C
Area = ½ (b x h)
Area = ½ (0.20" x 0.60")
Area = ½ (.12"²)
Area = 0.06"²

Area = A+E+D
Area = ½ (b x h)
Area = ½ (0.60" x 1.20")
Area = ½ (0.72"²)
Area = 0.36"²

Area = A+E+F
Area = ½ (b x h)
Area = ½ (0.90" x 1.20")
Area = ½ (1.08"²)
Area = 0.135"²

Area = D+F+H+I
Area = b x h
Area = 1.50" x 0.50"
Area = 0.750"²

Area = H+I+S+T
Area = b x h
Area = 1.50" x 3.00"
Area =4.50"²

Area = F+G+J
Area = ½ (b x h)
Area = ½ (0.40" x 0.75")
Area = ½ (0.30"²)
Area = 0.15"²

Area = J+K+N
Area = ½ (b x h)
Area = ½ (0.15" x 0.75")
Area = ½ (0.1125"²)
Area = 0.05625"²

Area = G+H+J+K
Area = b x h
Area = 0.75" x 0.15"
Area = 0.1125"²

Area = H+K+R+S
Area = b x h
Area = 0.75" x 3.00"
Area = 2.25"²

Area = K+L+N
Area = ½ (b x h)
Area = ½ (0.15" x 0.75")
Area = ½ (0.1125"²)
Area = 0.05625"²

Area = L+M+N
Area = ½ (b x h)
Area = ½ (0.15" x 0.75")
Area = ½ (0.1125"²)
Area = 0.05625"²

Area = L+M+Q+R
Area = b x h
Area = 0.75" x 2.85"
Area = 2.1375"²

Area = N+O+P+Q
Area = b x h
Area = 1.5" x 3.00"
Area = 4.50"²

Vessel Base Metal = 4.50"² + 2.1375"² + 0.05625"² = 6.69"²
Weld Metal = 0.05625"² + 0.05625"² + 2.25"² + 0.1125"² + 0.15"² =2.625"²
Nozzle Base Metal = 4.50"² + 0.750"² + 0.36"² + 0.135"² + 0.06"² + 0.06"² = 5.865"²

Attachment 7A

Reactor Pressure Vessel Shell – to - Nozzle Weld
Code Category: B-D
Item No. B3.90
Weld ID: N-5A Core Spray Nozzle

Coverage Calculation
(NDE Report RO14-UT-023)

Vessel Base Metal

Area = a + c + d
Area = ½ (b x h)
Area = ½ (0.15" x 0.75")
Area = ½ (0.1125"²)
Area = 0.05625"²

Area = a + c + e
Area = ½ (b x h)
Area = ½ (0.70" x 0.75")
Area = ½ (0.525"²)
Area = 0.2625"²

Area = 0.2625"² - 0.05625"²
Area = 0.21"² for a + d + e

Area = 6.69"² Total vessel base metal – 0.21"² = 6.48"² scanned
Area = 6.48"² ÷ 6.69"² = 0.968 or 96.8%

Weld Metal

Area = e + f + g
Area = ½ (b x h)
Area = ½ (0.75" x 0.70")
Area = ½ (0.525"²)
Area = 0.2625"² scanned

Area = f + g + h + i
Area = b x h
Area = 0.75" x 1.60"
Area = 1.20"² scanned

Area = 0.2625" +1.20" = 1.46"²
Area = 1.46"² ÷ 2.625" ²Total weld Metal = 0.56 or
Area = 56.0%

Nozzle Base Metal

Area = g + i + l
Area = ½ (b x h)
Area = ½ (1.70" x 1.65")
Area = ½ (2.805"²)
Area = 1.40"² scanned

Area = 1.40"² ÷ 5.865"² Nozzle Base Metal = 0.24 or 24 %

0° and Circ.

Area = (b x h)
Area = (1.50" x 3.00")
Area = 4.50"² scanned

Area = 4.50"² ÷ 15.18"² = 0.296 or 30%

Totals

0° = 30.0%
45° Vessel Base Metal = 96.8%
45° Weld Metal = 56.0% in one direction
45° Weld Metal coming back 0.0%
45° Nozzle Base Metal
Circ. CW direction = 30.0%
Circ. CCW direction = 30.0%
Total % in all directions 266.8% ÷ 7 = 38.11 or 38.11%

Attachment 7A

Reactor Pressure Vessel Shell – to - Nozzle Weld
Code Category: B-D
Item No. B3.90
Weld ID: N-5A Core Spray Nozzle

Drawing of Nozzle and Limiting Configuration
(NDE Report RO14-UT-023)

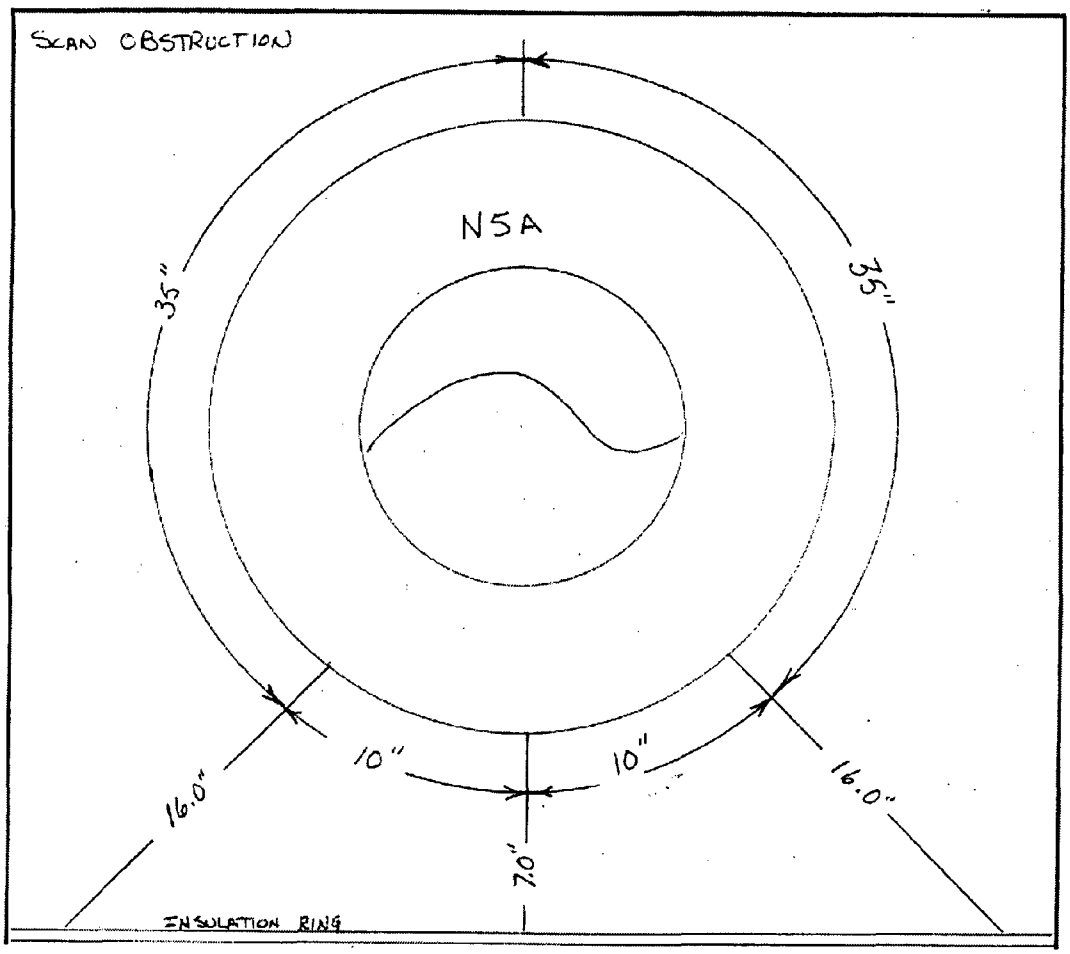

Attachment 7A

Reactor Pressure Vessel Shell – to - Nozzle Weld
Code Category: B-D
Item No. B3.90
Weld ID: N-5A Core Spray Nozzle

Coverage Plot (Calculation Drawing)
(NDE Report RO14-UT-023)

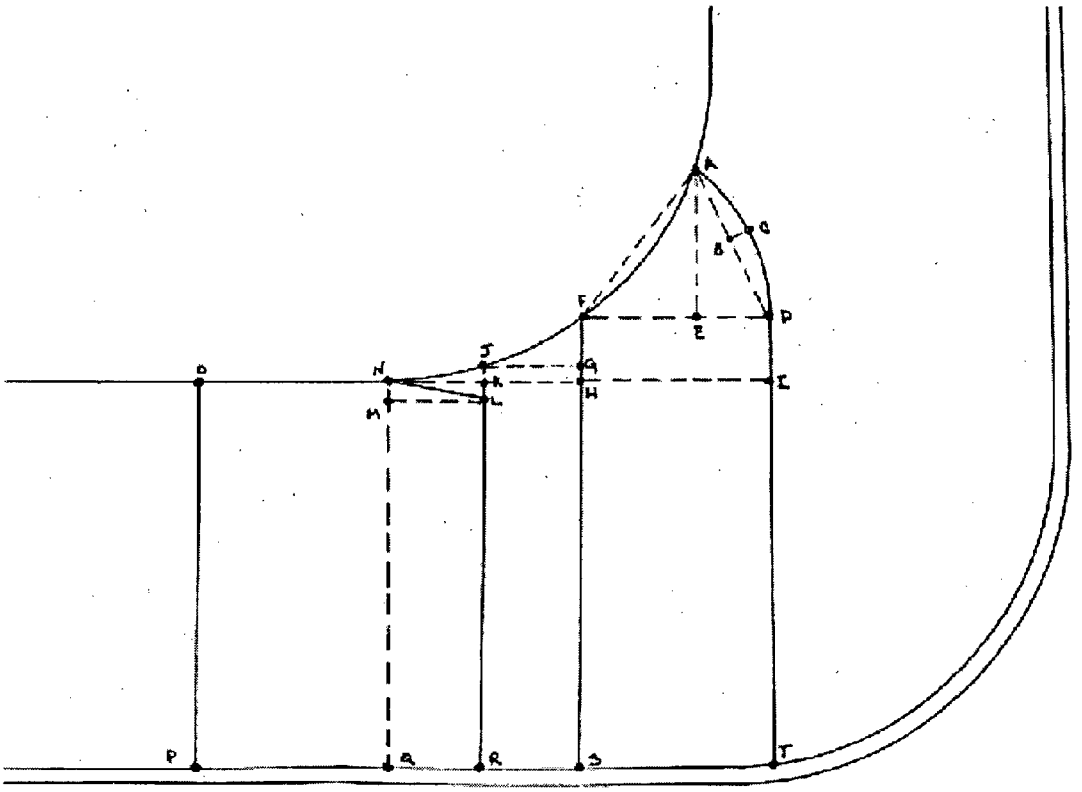

Attachment 7A

Reactor Pressure Vessel Shell – to - Nozzle Weld
Code Category: B-D
Item No. B3.90
Weld ID: N-5A Core Spray Nozzle

Coverage Plot (Calculation Drawing)
NDE Report RO14-UT-023)

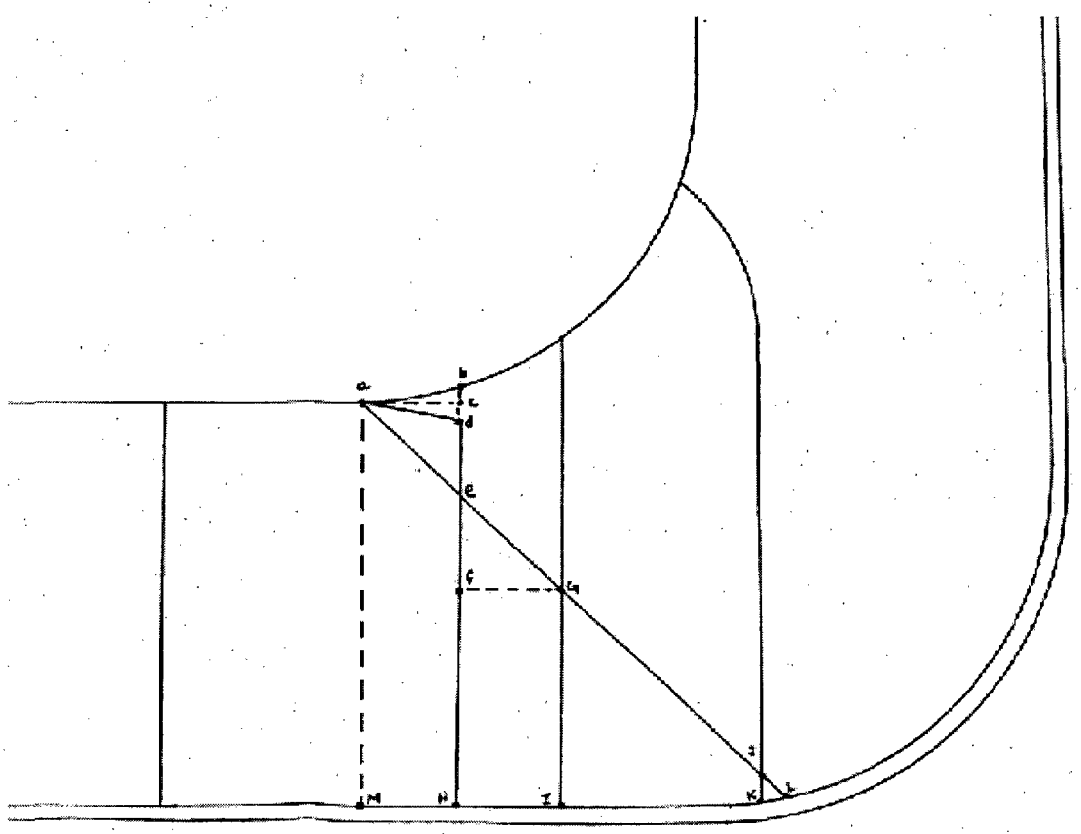

Attachment 7A

Reactor Pressure Vessel Shell – to - Nozzle Weld
Code Category: B-D
Item No. B3.90
Weld ID: N-5A Core Spray Nozzle

45° Axial Coverage Plot
(NDE Report RO14-UT-023)

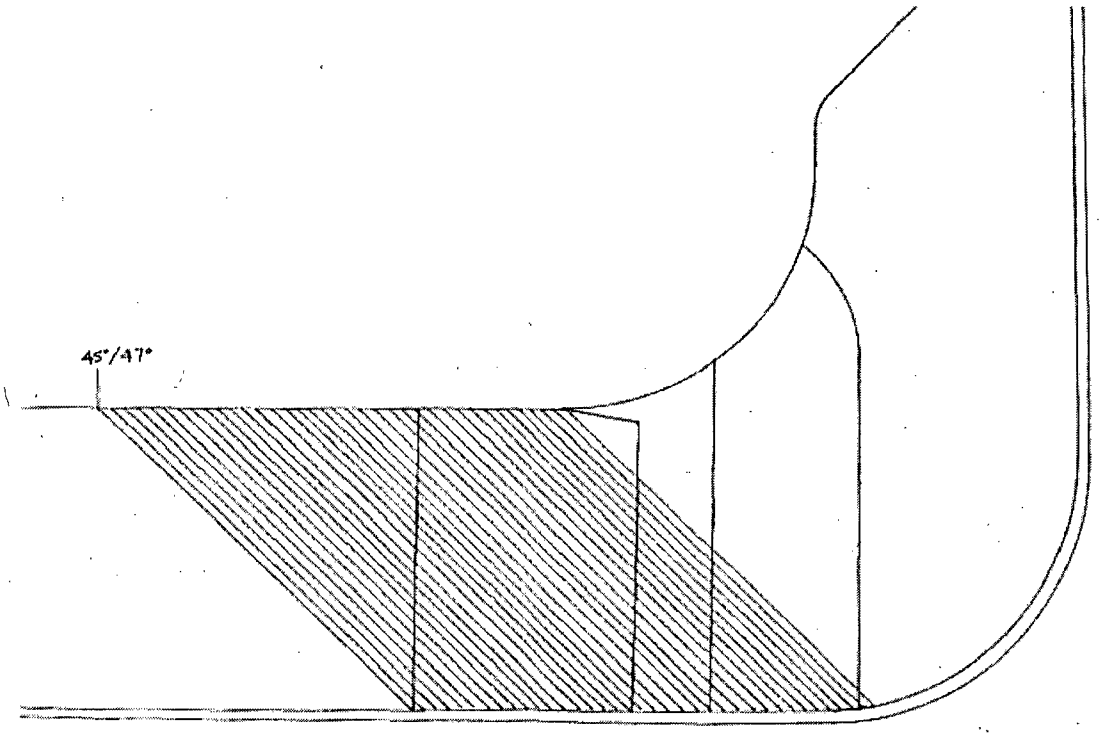

Attachment 7A

Reactor Pressure Vessel Shell – to - Nozzle Weld
Code Category: B-D
Item No. B3.90
Weld ID: N-5A Core Spray Nozzle

60° Axial Coverage Plot
(NDE Report RO14-UT-023)

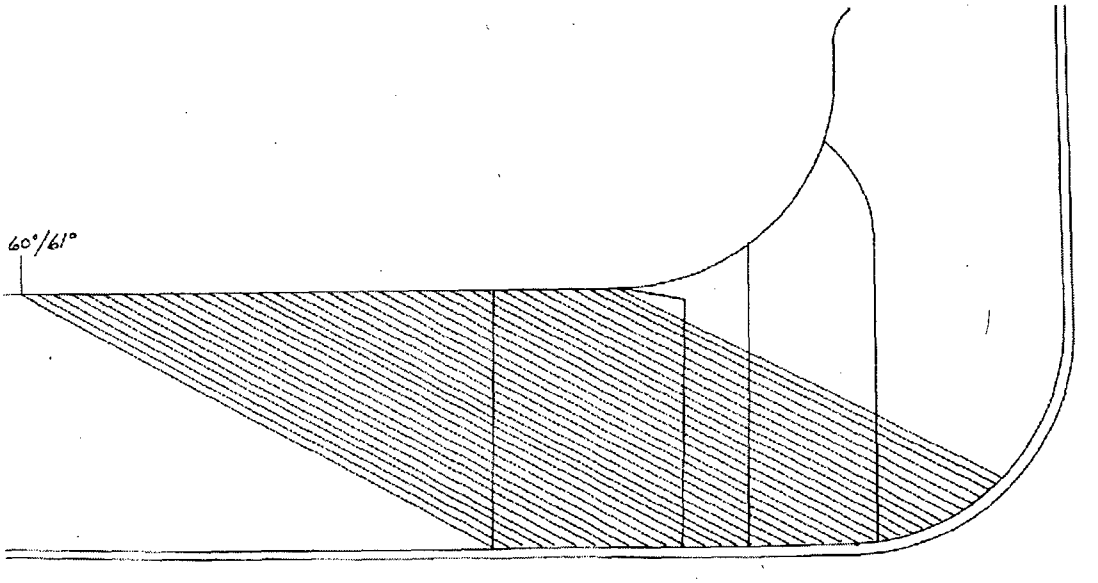

Attachment 7A

Reactor Pressure Vessel Shell – to - Nozzle Weld
Code Category: B-D
Item No. B3.90
Weld ID: N-5A Core Spray Nozzle

0° and Circumferential Coverage Plot
(NDE Report RO14-UT-023)

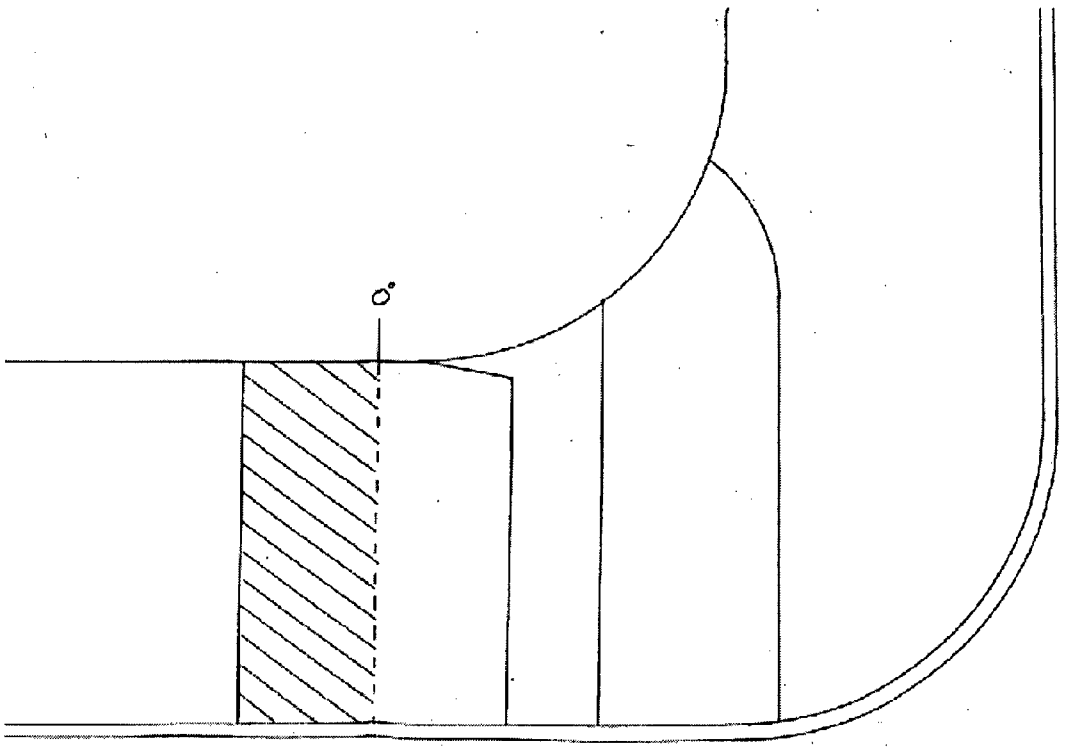

Attachment 7B

Reactor Pressure Vessel Shell – to - Nozzle Weld
Code Category: B-D
Item No. B3.90
Weld ID: N-5B Core Spray Nozzle

Coverage Calculation
(NDE Report 06UT133)

		CODE CROSS-SECTIONAL AREA		TOTAL CODE COVERAGE		
Weld Length = 360. Exam Volume = 55.		Required Exam Area Sq. In.	Area Scanned Manual	Percent of Area Manual	Weld Length Manual	Percent Manual
60° NS T-Scan	A	16.9	1.1	2.0%	350	1.0%
60° S5 T-Scan	A	31.6	22.1	40.2%	350	19.5%
60° S4 T-Scan	A	6.5	6.5	11.8%	350	5.7%
60° NS P-Scan	A	16.9	0.6	1.1%	350	0.5%
60° S5 P-Scan	A	31.6	9.5	17.3%	350	8.4%
60° S4/IRS Scan	A	6.5	3.9	7.1%	350	3.4%
60° NS T-Scan						
60° S5 T-Scan						
60° S4 T-Scan						
60° NS P-Scan						
60° S5 P-Scan						
60°S4/IRS Scan						
				% Total Composite Coverage =		38.6%

Attachment 7B

Reactor Pressure Vessel Shell – to - Nozzle Weld
Code Category: B-D
Item No. B3.90
Weld ID: N-5B Core Spray Nozzle

Axial Coverage Plot
(NDE Report 06UT133)

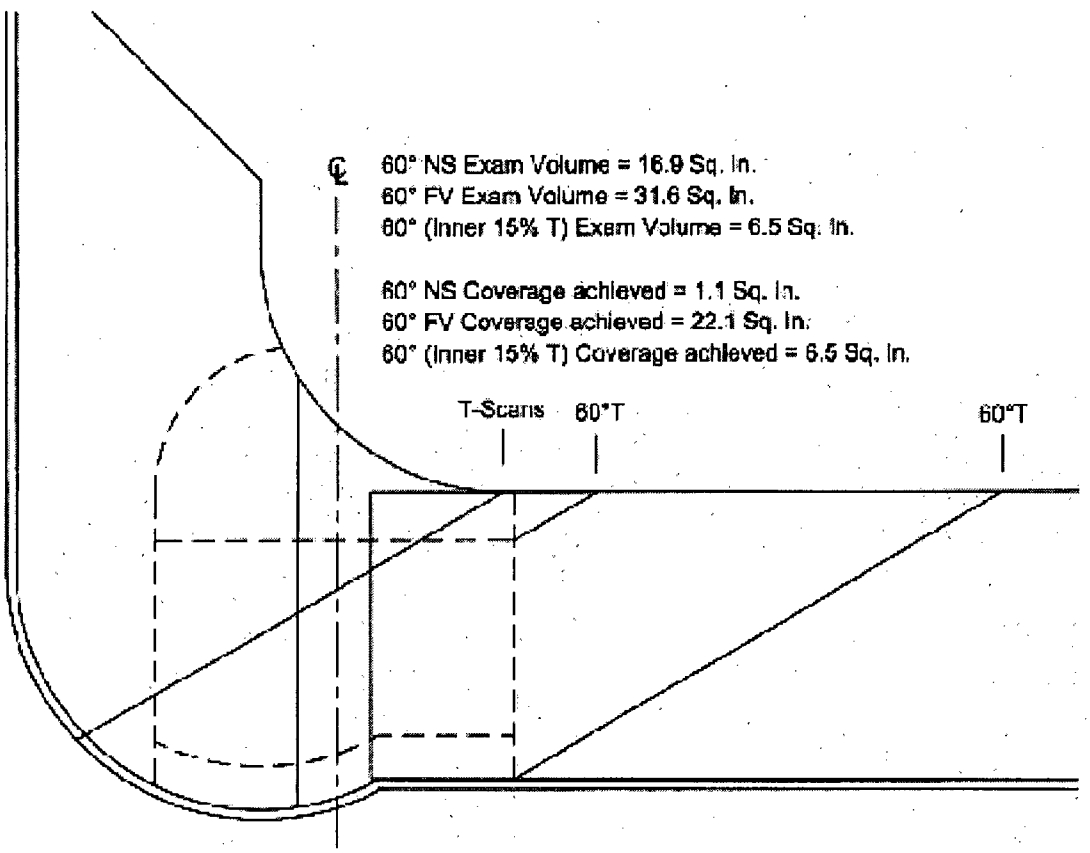

Attachment 7B

Reactor Pressure Vessel Shell – to - Nozzle Weld
Code Category: B-D
Item No. B3.90
Weld ID: N-5B Core Spray Nozzle

Circumferential Coverage Plot
(NDE Report 06UT133)

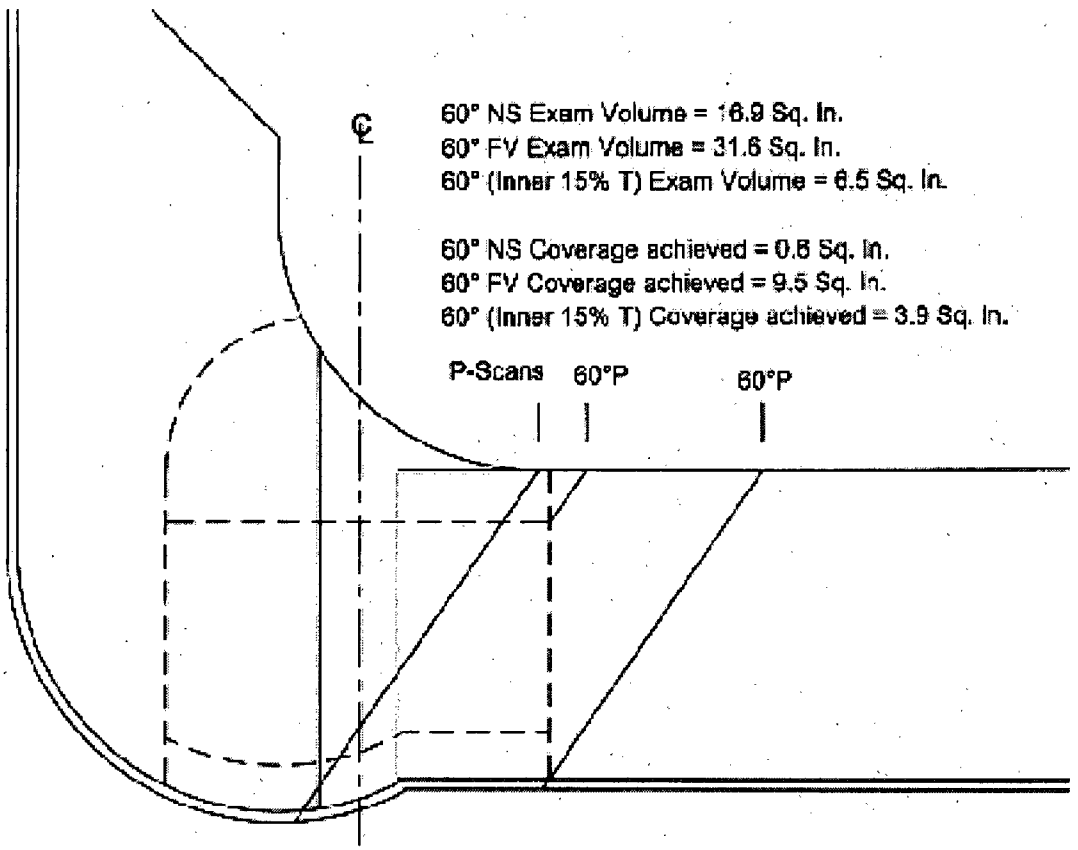

Attachment 8

Reactor Pressure Vessel Shell – to - Nozzle Weld
Code Category: B-D
Item No. B3.90
Weld ID: N-8B

Coverage Calculation
(NDE Report # 98-JAF-UT5-011)

TYPICAL CALCULATION FOR CODE REQUIRED VOLUME
FOR N8 JET PUMP INSTRUMENTATION NOZZLES

	EXAM. COVERAGE ACHIEVED	EXAM. COVERAGE NOT ACHIEVED	CODE REQUIRED
0°	22.2 %	10.8 %	33%
45° + 60° AX. SCANS	27.2 %	5.8 %	33%
45° + 60° CIRC. SCANS	22.2%	10.8 %	33%

71.6% : TOTAL PERCENTAGE OF CODE REQUIRED VOLUME ACHIEVED

* Note: CALCULATIONS FOR 45°+60° AX SCANS EXAM. COVERAGE NOT ACHIEVED, INCLUDE LIMITED COVERAGE DUE TO OD NOZZLE BLEND RADIUS GEOMETRY, LIMITED COVERAGE DUE TO INSULATION AND LIMITED COVERAGE DUE TO VESSEL TRANSISION AREA 25.8%

Attachment 8

Reactor Pressure Vessel Shell – to - Nozzle Weld
Code Category: B-D
Item No. B3.90
Weld ID: N-8B

Drawing of Nozzle and Limiting Configuration
(NDE Report # 98-JAF-UT5-011)

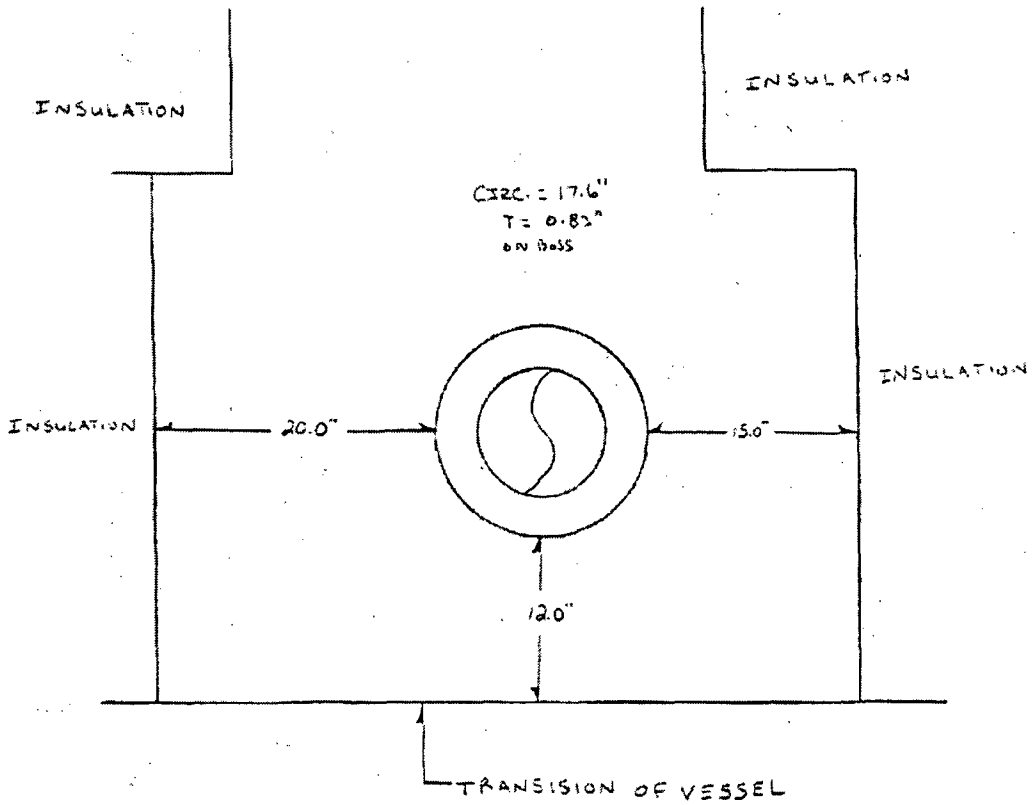

Attachment 8

Reactor Pressure Vessel Shell – to - Nozzle Weld
Code Category: B-D
Item No. B3.90
Weld ID: N-8B

Axial Coverage Plot (Configuration Limitation)
(NDE Report # 98-JAF-UT5-011)

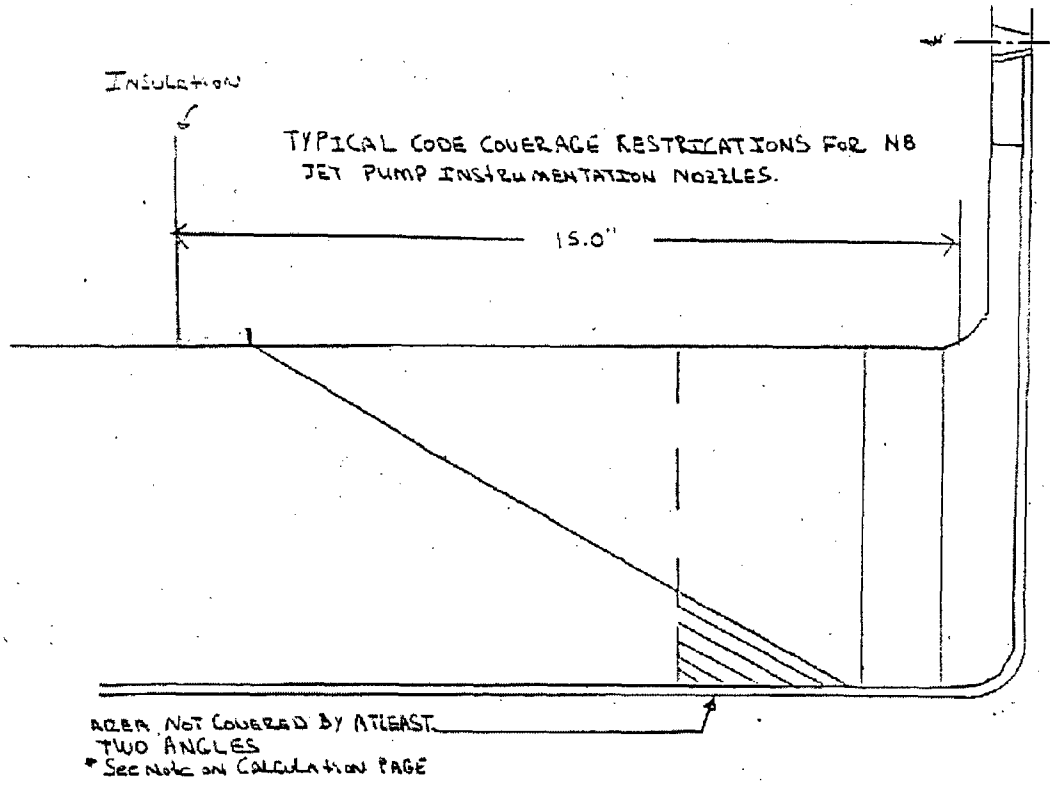

Attachment 8

Reactor Pressure Vessel Shell – to - Nozzle Weld
Code Category: B-D
Item No. B3.90
Weld ID: N-8B

Axial Coverage Plot (Configuration Limitation)
(NDE Report #'s 98-JAF-UT5-011)

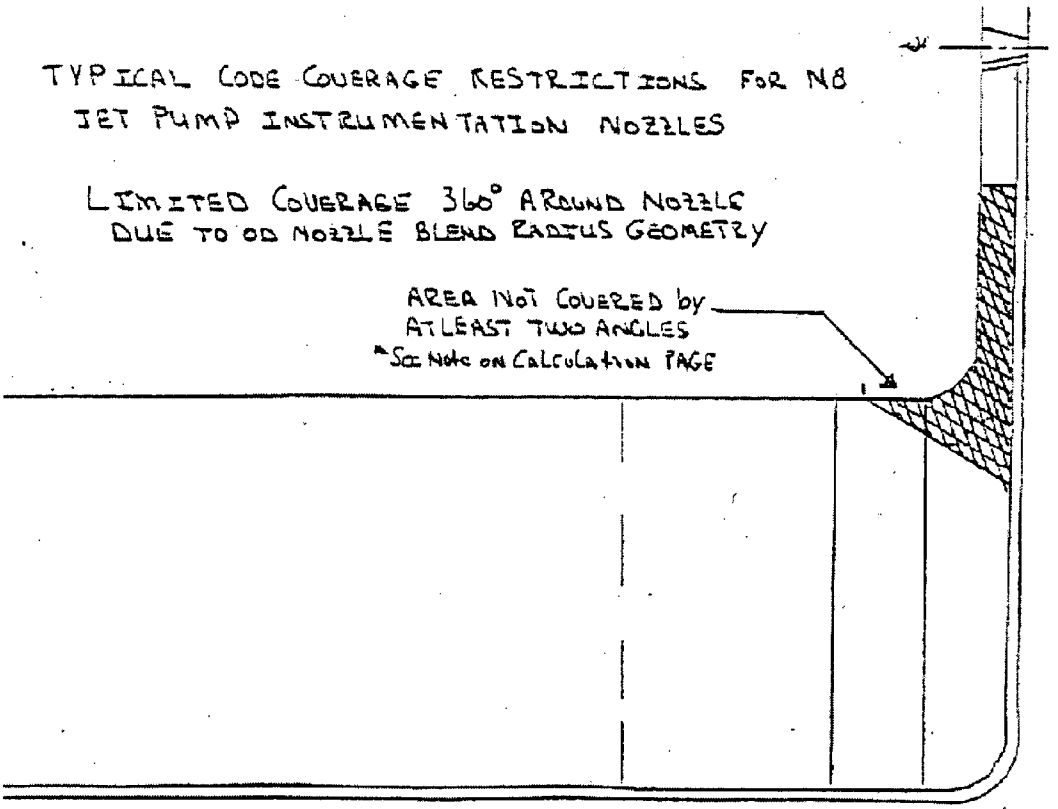

Attachment 8

Reactor Pressure Vessel Shell – to - Nozzle Weld
Code Category: B-D
Item No. B3.90
Weld ID: N-8B

Axial Coverage Plot (Configuration Limitation)
(NDE Report #'s 98-JAF-UT5-011)

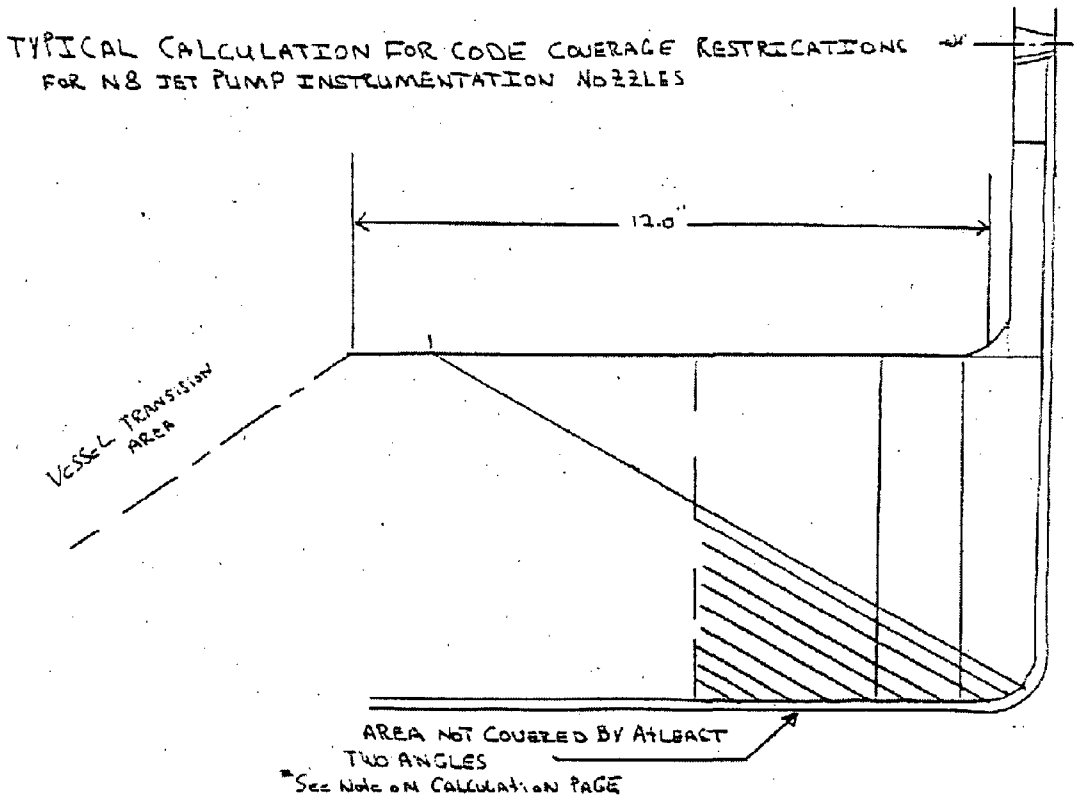

Attachment 8

Reactor Pressure Vessel Shell – to - Nozzle Weld
Code Category: B-D
Item No. B3.90
Weld ID: N-8B

0°and Circumferential Coverage Plot (Configuration Limitation)
(NDE Report #'s 98-JAF-UT5-011)

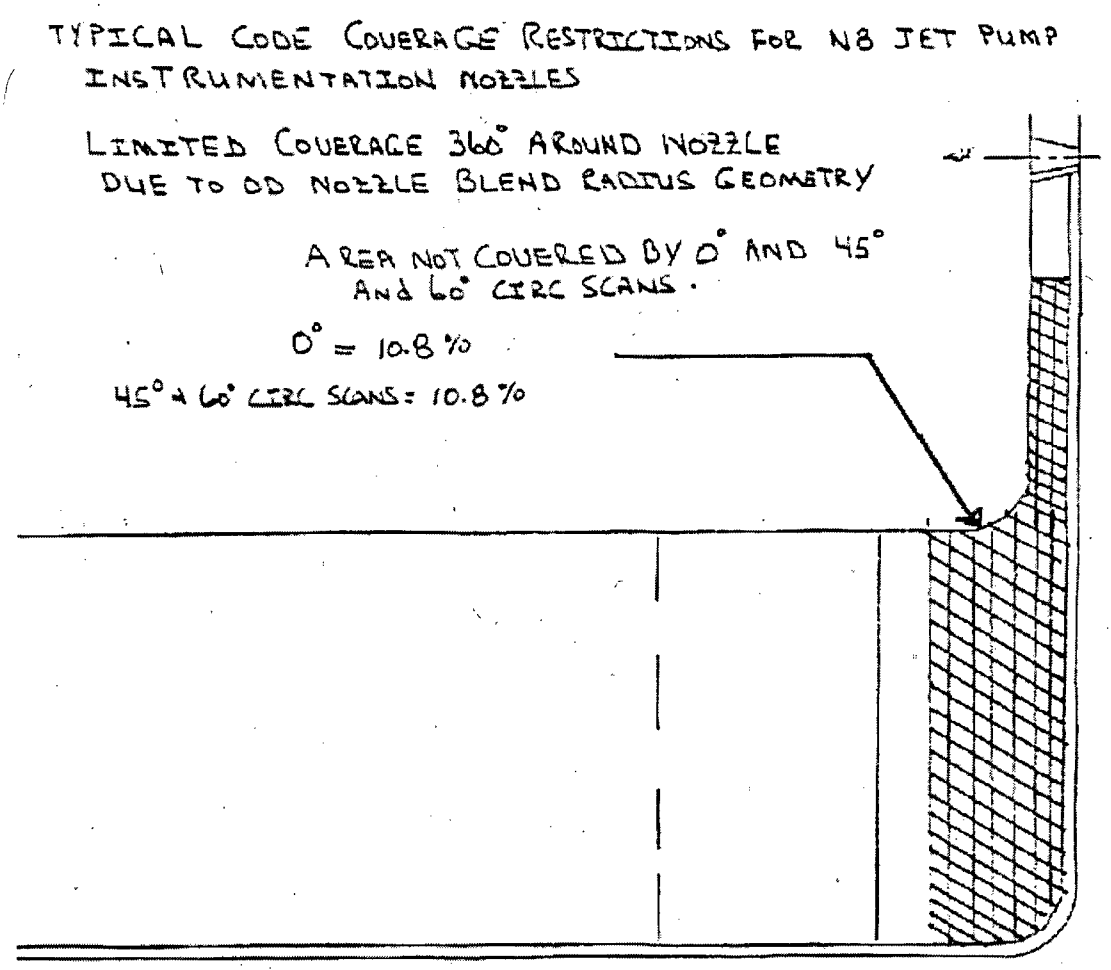

Attachment 9

Reactor Pressure Vessel Shell – to - Nozzle Weld
Code Category: B-D
Item No. B3.90
Weld ID: N-9 Control Drive Nozzle

Coverage Calculation
(NDE Report 06UT140)

		CODE CROSS-SECTIONAL AREA		TOTAL CODE COVERAGE		
Weld Length = 360. Exam Volume = 55.6		Required Exam Area Sq. In.	Area Scanned Manual	Percent of Area Manual	Weld Length Manual	Percent Manual
60° NS T-Scan	A	15.3	4.1	7.4%	315	3.2%
60° S6 T-Scan	A	32.2	28.8	51.8%	315	22.7%
60° S4 T-Scan	A	8.1	8.1	14.6%	315	6.4%
60° NS P-Scan	A	15.3	3.8	6.8%	315	3.0%
60° S6 P-Scan	A	32.2	24.8	44.6%	315	19.5%
60° S4/IRS Scan	A	8.1	8.1	14.6%	315	6.4%
60° NS T-Scan	B	15.3	4.1	7.4%	45	0.5%
60° S6 T-Scan	B	32.2	15.6	28.1%	45	1.8%
60° S4 T-Scan	B	8.1	0.9	1.6%	45	0.1%
60° NS P-Scan	B	15.3	3.8	6.8%	45	0.4%
60° S6 P-Scan	B	32.2	17.4	31.3%	45	2.0%
60°S4/IRS Scan	B	8.1	2.9	5.2%	45	0.3%
				% Total Composite Coverage =		66.2%

Attachment 9

Reactor Pressure Vessel Shell – to - Nozzle Weld
Code Category: B-D
Item No. B3.90
Weld ID: N-9 Control Drive Nozzle

Drawing of Nozzle and Limiting Condition
60° RL T-Scan restricted due to insulation support ring
(NDE Report 06UT140)

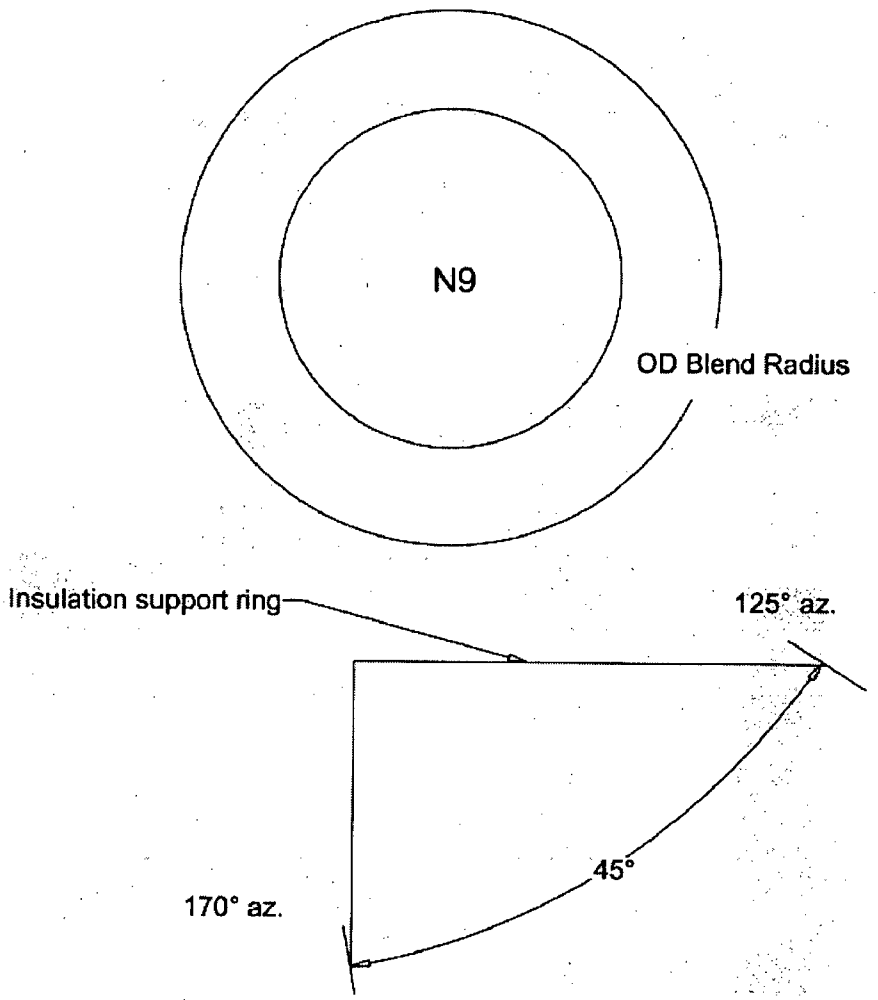

Attachment 9

Reactor Pressure Vessel Shell – to - Nozzle Weld
Code Category: B-D
Item No. B3.90
Weld ID: N-9 Control Drive Nozzle

Axial Coverage Plot
(NDE Report 06UT140)

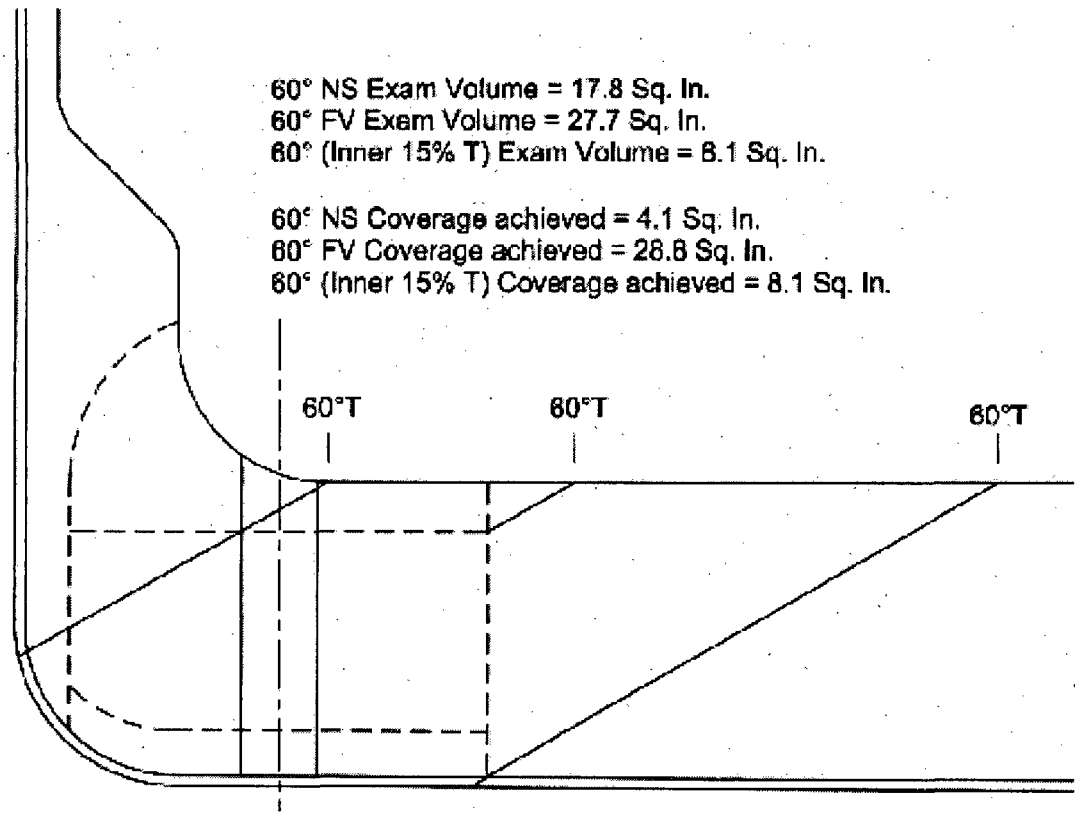

Attachment 9

Reactor Pressure Vessel Shell – to - Nozzle Weld
Code Category: B-D
Item No. B3.90
Weld ID: N-9 Control Drive Nozzle

Axial Coverage Plot 125 to 175 Degrees
(NDE Report 06UT140)

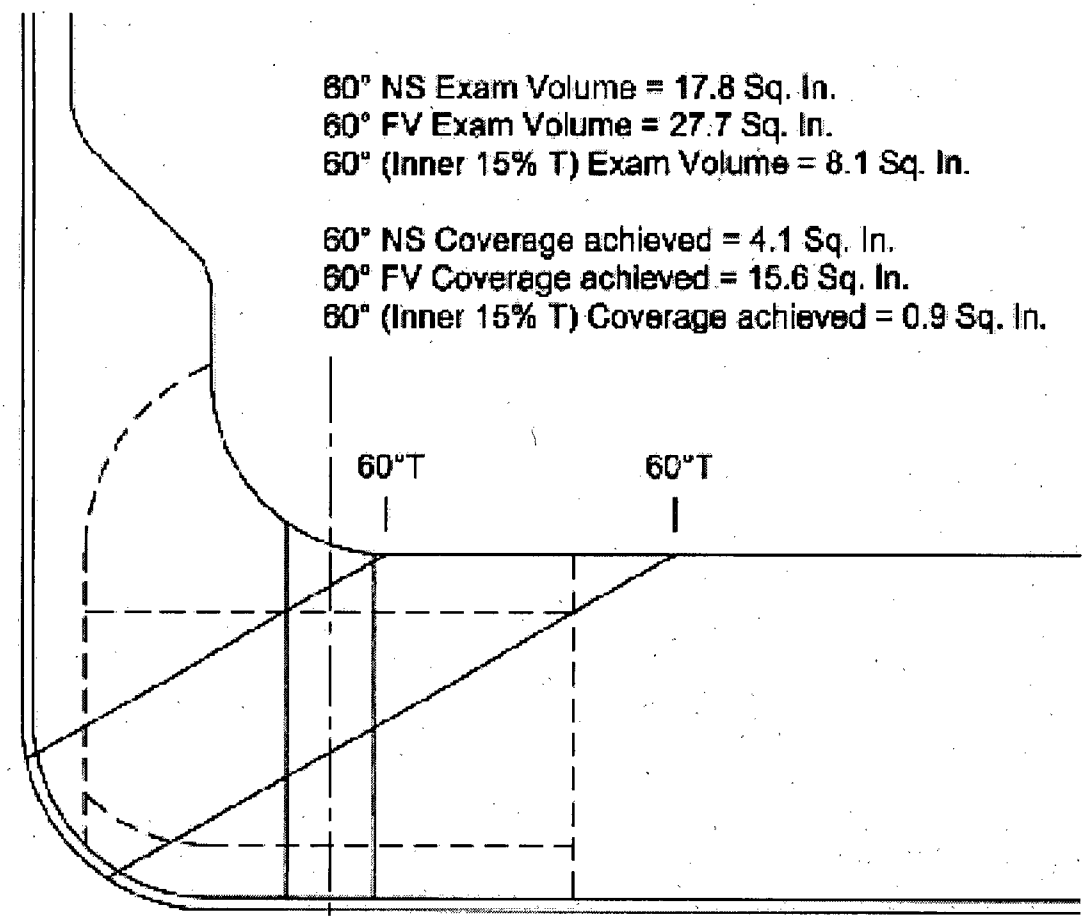

60° T-Scan restricted due to insulation support ring.

Attachment 9

Reactor Pressure Vessel Shell – to - Nozzle Weld
Code Category: B-D
Item No. B3.90
Weld ID: N-9 Control Drive Nozzle

Circumferential Coverage Plot
(NDE Report 06UT140)

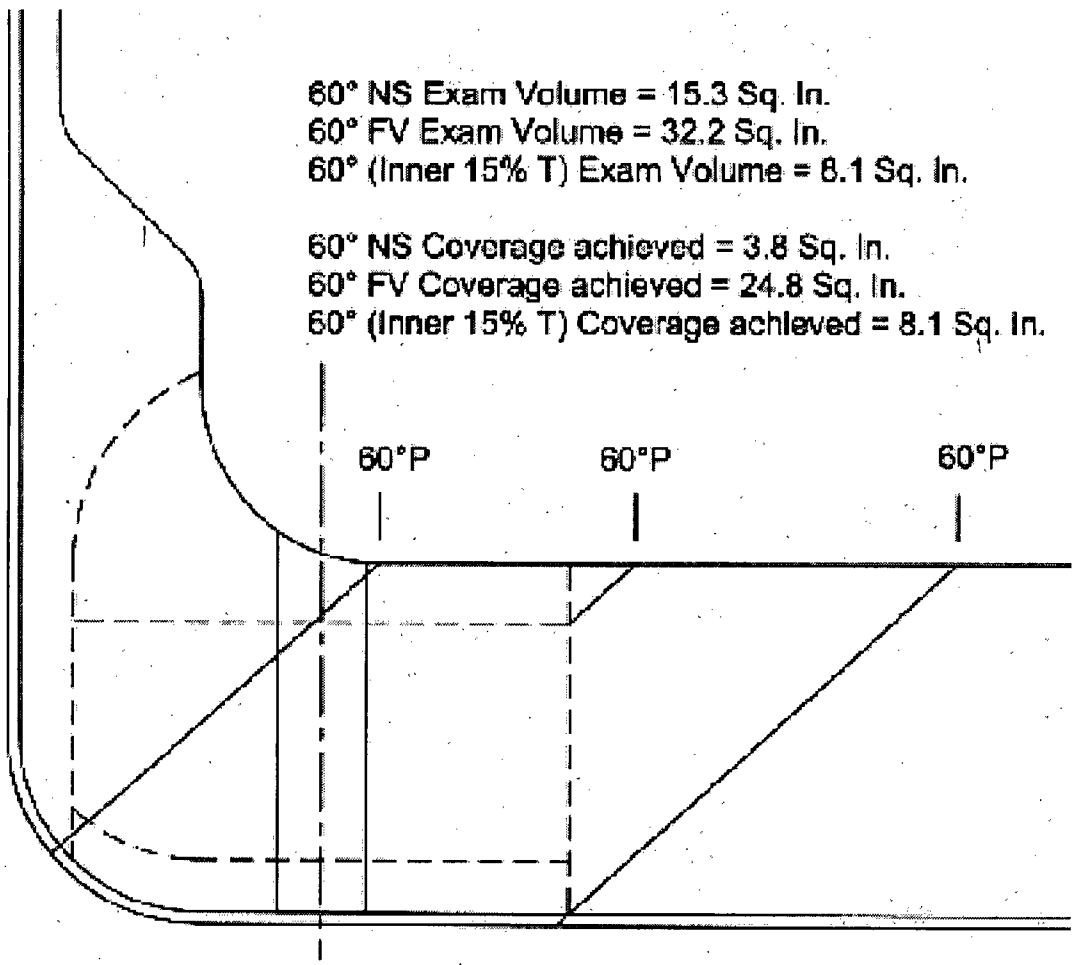

Attachment 9

Reactor Pressure Vessel Shell – to - Nozzle Weld
Code Category: B-D
Item No. B3.90
Weld ID: N-9 Control Drive Nozzle

Circumferential Coverage Plot 125 to 175 Degrees
(NDE Report 06UT140)

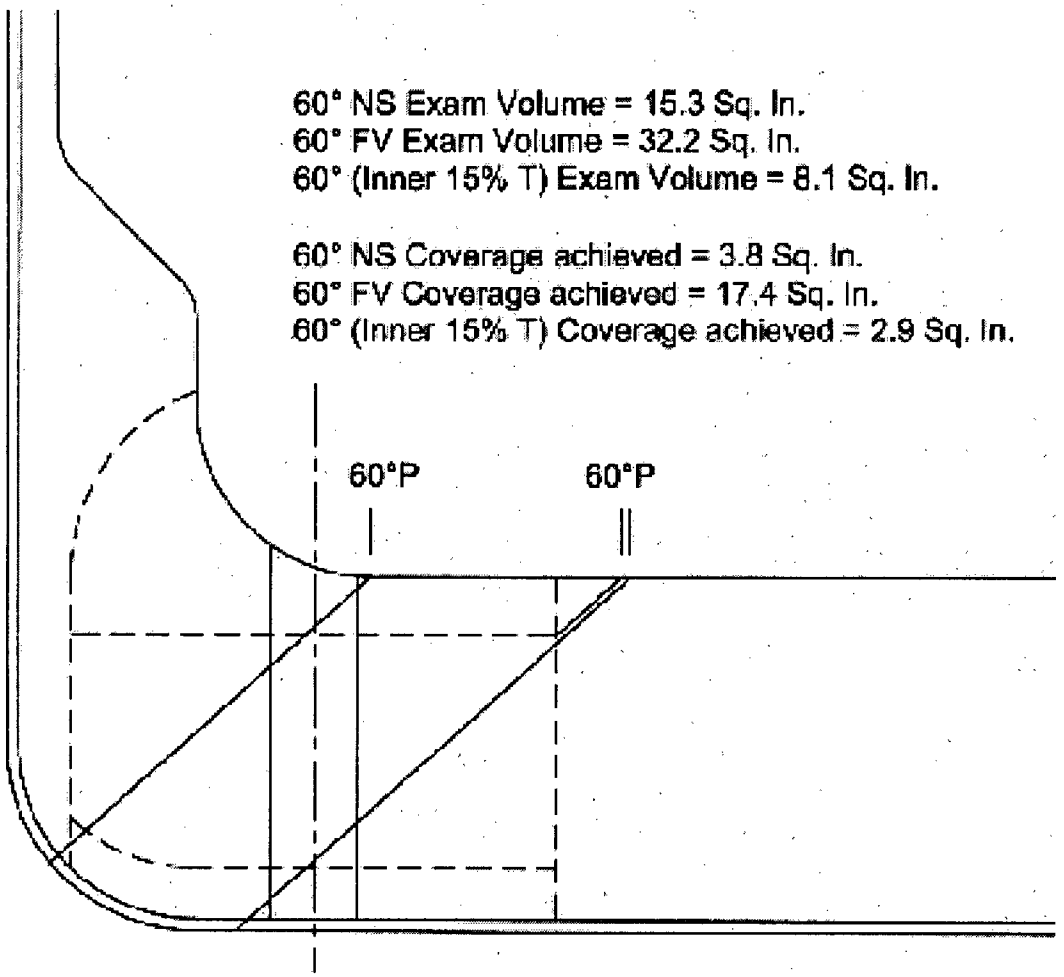

Attachment 10

Reactor Pressure Vessel Ligaments
Code Category: B-G-1
Item No. B6.40
Weld ID: RPV Threads in Flange (Ligaments)

Drawing Depicting Limiting Conditions and Volume Examined
(NDE Report # 98-JAF-UT7-001)

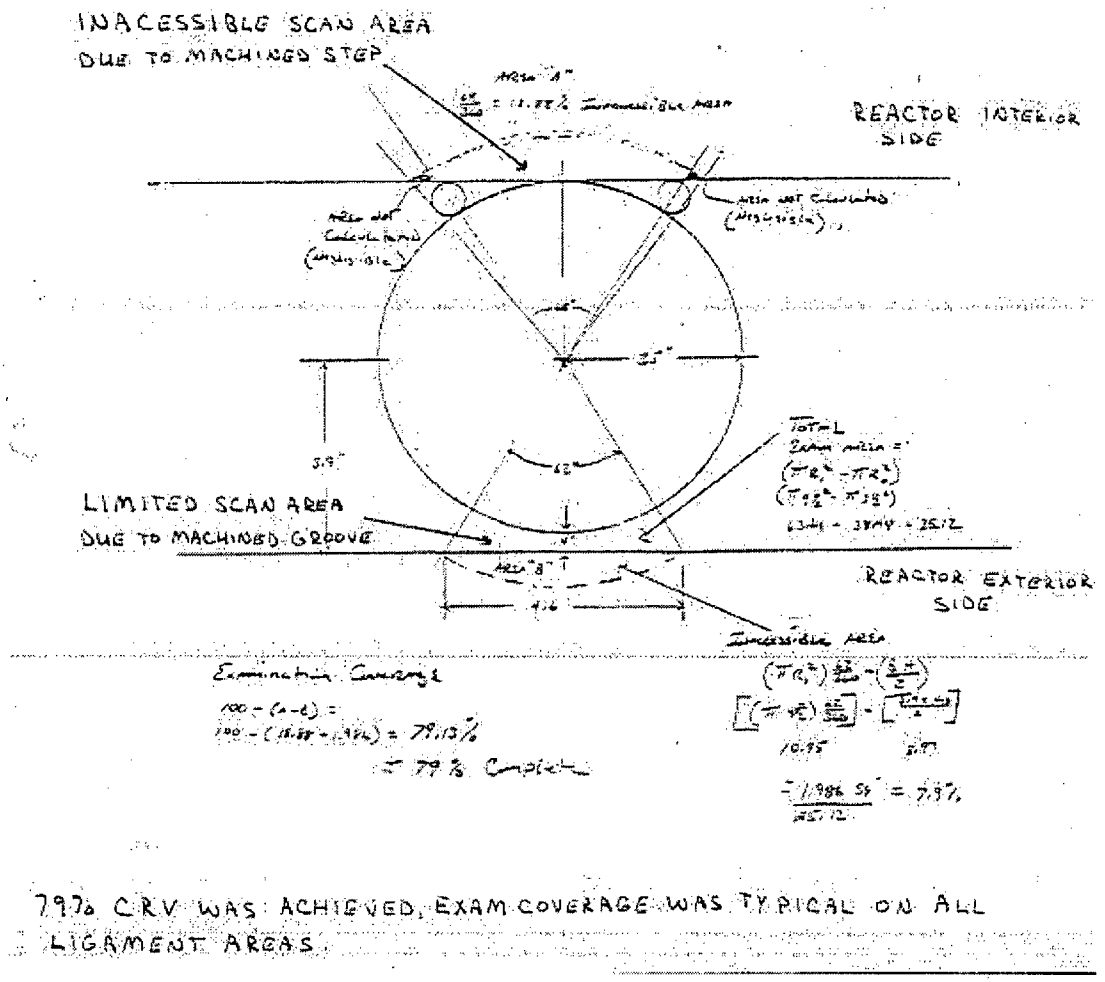

Attachment 11

Reactor Pressure Vessel Integrally Welded Attachments
Code Category: B-K (B-K-1)
Item No. B10.10
Weld ID: Stabilizer-1, 2, 3 and 4

Drawing Depicting Limiting Conditions (Typical for all Stabilizers)
13 of 38 inches examined ~ 34% complete

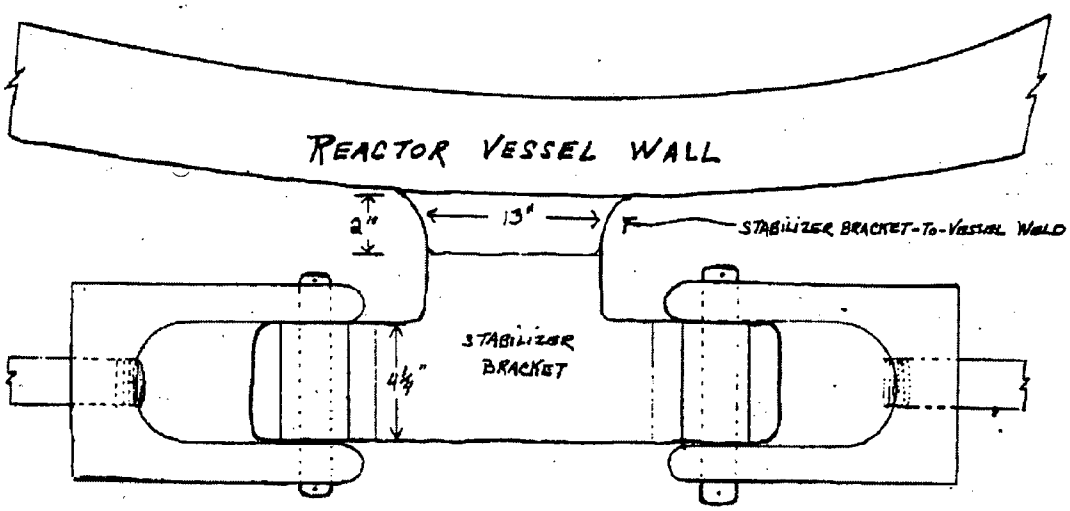

Attachment 11

Reactor Pressure Vessel Integrally Welded Attachments
Code Category: B-K (B-K-1)
Item No. B10.10
Weld ID: Stabilizer-1, 2, 3 and 4

Drawing Depicting Limiting Conditions (Typical for all Stabilizers)
13 of 38 inches examined ~ 34% complete

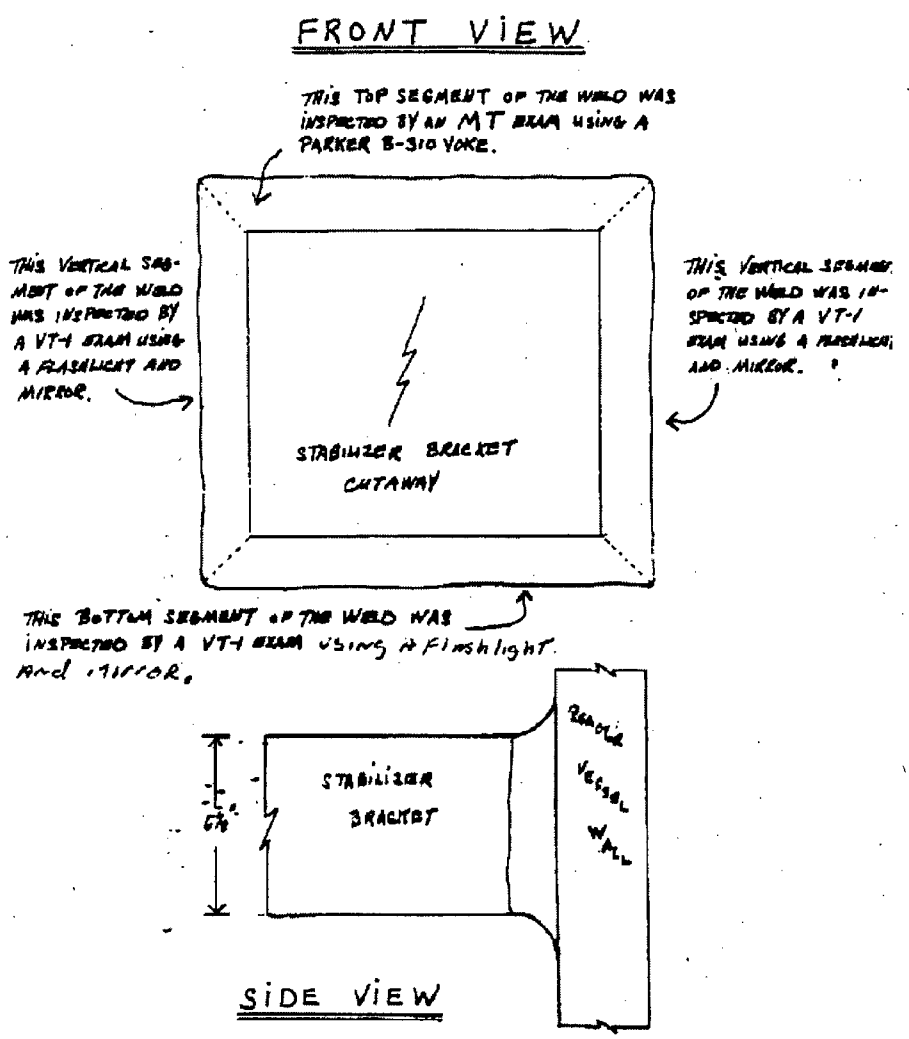

Attachment 12

Control Rod Drive System (Scram Tank 03TK-1A)
Code Category: C-A
Item No. C1.20
Weld ID: BH-1A (Scram Tank Shell-to-Bottom Head)

Axial / Circumferential Coverage Plot
(NDE Report # 04UT069)

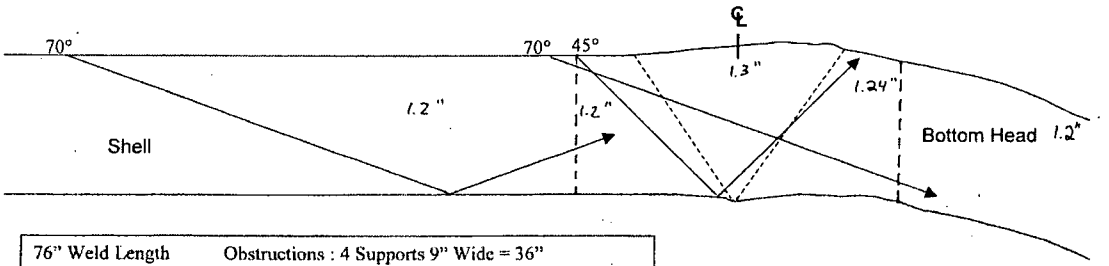

76" Weld Length Obstructions : 4 Supports 9" Wide = 36"
4 Weld-o-lets 3" Wide = 12"
Total Weld Obstructed 48"
76" – 48" = 28" Inspected
18 % Total Weld Coverage

Attachment 12

Control Rod Drive System (Scram Tank 03TK-1A)
Code Category: C-A
Item No. C1.20
Weld ID: BH-1A (Scram Tank Shell-to-Bottom Head)

Coverage Plot (Obstructions/Limiting conditions)
(NDE Report # 04UT069)

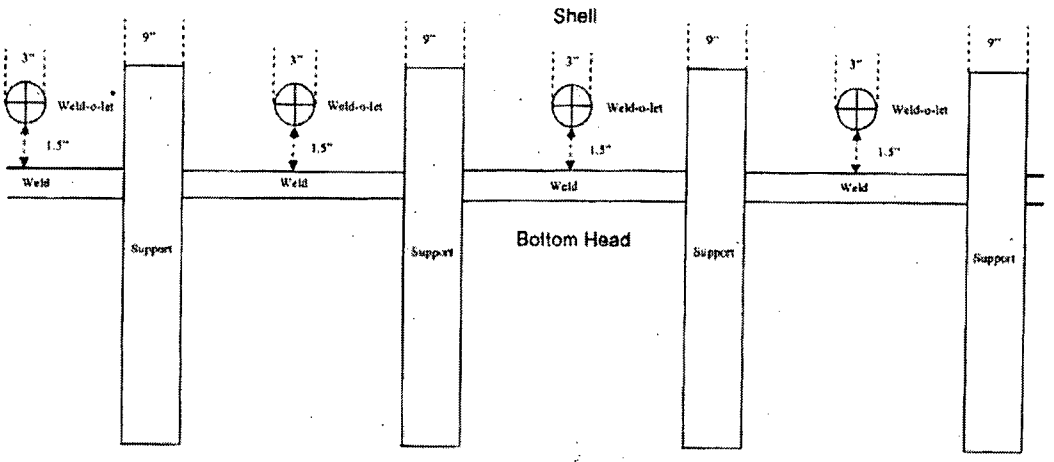

Attachment 13

Control Rod Drive System (Scram Tank 03TK-1A)
Code Category: C-B
Item No. C2.20
Weld ID: N-1-A-IR (Nozzle Inner Radius)

0° and 180° Coverage Plot
(NDE Report # 04UT071)

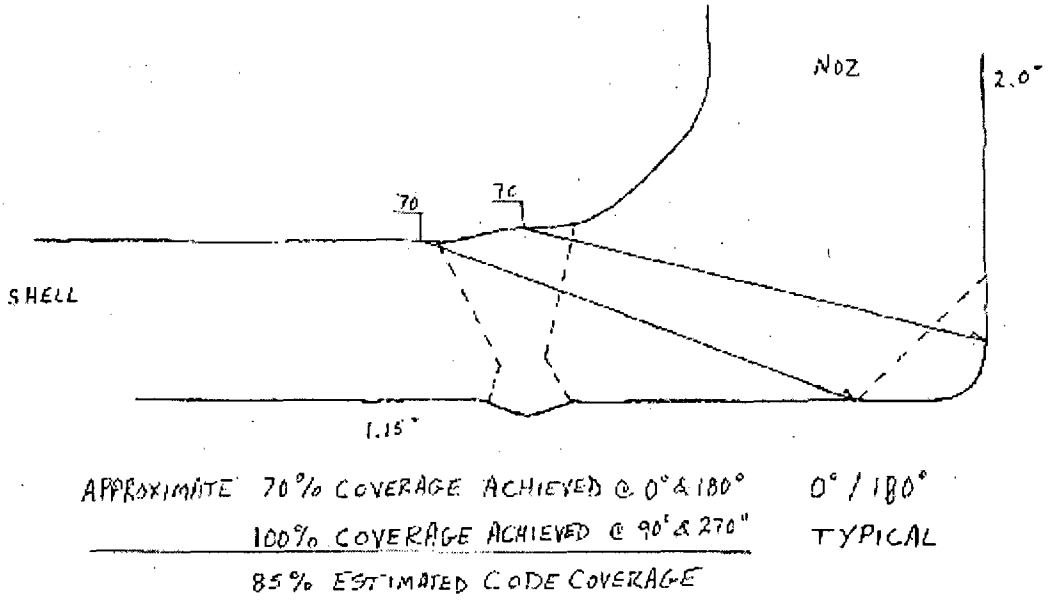

Attachment 13

Control Rod Drive System (Scram Tank 03TK-1A)
Code Category: C-B
Item No. C2.20
Weld ID: N-1-A-IR (Nozzle Inner Radius)

90° and 270° Coverage Plot
(NDE Report # 04UT071)

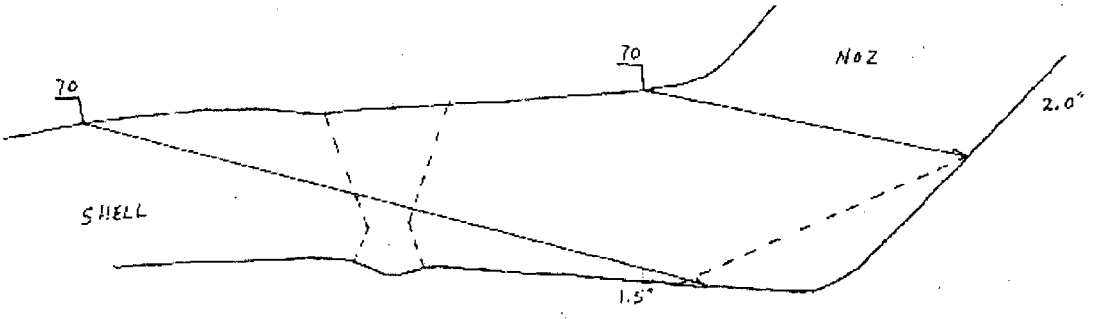

100% COVERAGE ACHIEVED @ 90° & 270° 90°/270°
APPROXIMATE 70% COVERAGE ACHIEVED @ 0° & 180° TYPICAL
85% ESTIMATED CODE COVERAGE

Attachment 14

High Pressure Cooling Injection (HPCI)
Code Category: R-A
Item No. R1.20
Weld ID: 14-23-433

Axial / Circumferential Coverage Plot
(NDE Report # 06UT052)

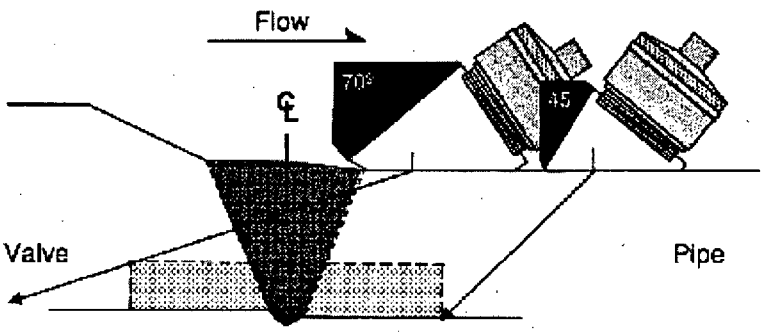

AXIAL EXAM
- Coverage = 100%

CIRC EXAM
- Exam width = (0.5" US + Weld + 0.5" DS) = 2.0"
- Examined (Weld + 0.5" DS) = 1.5"
- 1.5 / 2 = 75%

CALC
- (100% + 75%) / 2 = **87.5% coverage.**