PU/NE-07-03

TASK ORDER 10

VOID FRACTION IN LARGE DIAMETER PIPES: TEST FACILITY DESIGN DESCRIPTION REPORT

by

M. Ishii, B. Ozar, P. H. Sawant and S. S. Paranjape

Prepared for
U.S. Nuclear Regulatory Commission
Two White Flint North
11545 Rockville Pike
Rockville, MD 20852

PURDUE
UNIVERSITY

February 2007

PURDUE UNIVERSITY
SCHOOL OF NUCLEAR ENGINEERING

PURDUE UNIVERSITY
SCHOOL OF NUCLEAR ENGINEERING

PU/NE-07-03

TASK ORDER 10

VOID FRACTION IN LARGE DIAMETER PIPES: TEST FACILITY DESIGN DESCRIPTION REPORT

M. Ishii, B. Ozar, S. S. Paranjape and P. H. Sawant

Prepared for
U.S. Nuclear Regulatory Commission
Two White Flint North
11545 Rockville Pike
Rockville, MD 20852

School of Nuclear Engineering, 400 Central Drive,
West Lafayette, IN 47907, USA
Tel: 765-494-4587; Fax: 765-494-9570

ACKNOWLEDGEMENTS

This work was performed at Purdue University under the auspices of the U.S. Nuclear Regulatory Commisssion (NRC), Office of Nuclear Regulatory Research, through the Institute of Thermal-Hydraulics. The authors would like to express their gratitude to Joseph Kelly, Shawn Marshall, Stephen Bajorek, Jack Rosenthal, and Joseph Staudenmeier, and other staff of the NRC for their support on the project.

TABLE OF CONTENTS

Page

LIST OF FIGURES IV
ABSTRACT V
CHAPTER 1 INTRODUCTION 1
CHAPTER 2 EXPERIMENTAL FACILITY AND ISNTRUMENTATION 3
2.1 Experimental Facility 3
2.2 Key Instrumentation 5
2.2.1 Magnetic flow-meter 5
2.2.2 Gage pressure transducers 6
2.2.3 Differential pressure transducers 6
2.2.4 Thermocouples 7
2.2.5 Arch-type impedance-meter 7
CHAPTER 3 EXPERIMENTAL FACILITY OPERATING PROCEDURES 18
3.1 Start-up Procedures 18
3.1.1 Pre-check procedures 18
3.1.2 System start-up procedures 19
3.2 System Initialization Procedures 19
3.2 Shut-down Procedures 19
CHAPTER 4 SUMMARY 21

LIST OF FIGURES

Figure Page

Figure 2.1. Schematic of the test facility with 6" test section....9

Figure 2.2 Injector Design for uniform air-bubble injection 10

Figure 2.3 Schematic representation of the location of instrumentation ports 11

Figure 2.4 Schematic of the separation system....12

Figure 2.5 Instantaneous area averaged void fraction measure by impedance meter....13

Figure 2.6 Technical drawing of the 6 in. instrumentation port....14

Figure 2.7 Technical drawing of the 8 in. instrumentation port....15

Figure 2.8 Arch-type impedance-meter for 6" tube assembled in the test section....16

Figure 2.9 Arch-type impedance-meter for 8" tube assembled in the test section 17

ABSTRACT

This report provides the design description of the test facility for the research being carried out at Purdue University as a part of the Task Order 10, under Contract No. NRC-04-03-048 (Thermal Hydraulic Tasks), for U.S. Nuclear Regulatory Commission. The objective of the research is to perform air-water experiments to generate a database in large diameter pipes that extends into the transition region between bubbly/slug and annular/mist regimes. A detailed design of the experimental facility as well as the operating procedures are completed and summarized in this report. The test facility consists of two different diameter test sections of 152.4 mm and 203.3 mm in diameter. Only one of the test sections is installed at a given time. The total height of the test section is about 6.5 m. Magnetic flow-meters and air flow rotameters are considered for liquid and air flow-rate measurements. Meanwhile, impedance-meters with arch shaped electrodes are used to measure the area-averaged void fraction data. Pressure and differential pressure transducers as well as thermocouples are included in the facility to monitor the state of the fluid.

CHAPTER 1 INTRODUCTION

The USNRC's (United States Nuclear Regulatory Commission) system thermal-hydraulic analysis code TRACE (TRAC RELAP Advanced Computational Engine) is being developed to provide a best-estimate accident analysis capability for both operating pressurized and boiling water reactors as well as the next generation of evolutionary water reactor designs. In partnership with the code development, a comprehensive code assessment activity has been initiated. Results from these assessments have identified a code modeling deficiency for the prediction of void fraction in large diameter pipes. Remediation of this code deficiency has a high priority due to its impact on calculations for the proposed ESBWR design.

In the ESBWR design, a tall chimney region exists above the reactor core to provide the gravity head necessary to drive the natural circulation two-phase flow through the core. For this chimney region, the TRACE code uses the same interfacial drag models as for 1-D vertical pipes. That is, for the bubbly/slug flow regime, the Kataoka-Ishii drift flux model for large diameter pipes is converted to an interfacial friction coefficient. For the annular/mist flow regime, the Wallis annular flow interfacial friction model is used for the liquid film. When entrained droplets are predicted to exist, the drop volume fraction is estimated and the associated interfacial drag is added to that for the liquid film. For the transition region between these two regimes, TRACE uses a simple power-law weighting scheme to provide a continuous and smooth transition.

Two sources of data were identified to assess these models for hydraulic diameters of about the same size as the ESBWR chimney: pool data (Wilson and Carrier bubble rise tests) and the Ontario-Hydro transient upflow tests. In the assessment against the pool data, the TRACE code performed quite well up to void fractions of about 50-60%. This is not surprising as these tests were included in the data base used to develop

the Kataoka-Ishii drift flux model. However, for the large pipe data, there were a few data points in the void fraction range 60-80% and for which TRACE significantly under-predicted the void fraction.

For the Ontario-Hydro transient upflow tests, two deficiencies were observed in the TRACE assessment calculation. First, similar to the predictions for the pool data mentioned above, the TRACE calculated void fractions compared well up to a value of about 50%. For higher void fractions, however, TRACE progressively began to under-predict the void fraction until for a data value of 78%, the TRACE calculated value was only 67%. To put this into perspective, this means that TRACE could over-predict the liquid inventory in the chimney region by 50% thereby providing a non-conservative initial condition for a LOCA analysis.

A second potential modeling deficiency was observed at the Ontario-Hydro transient test as the mass flux decreased and the quality approached 90%. In the data, the void fraction was reported to be near unity, whereas in the TRACE calculation, the value was only 80%. This would appear to indicate that TRACE significantly under-predicts the interfacial shear in the transition region between bubbly/slug and annular/mist regimes. While this conclusion is consistent with the observation from the pool data comparisons, it is tentatively due to the uncertain boundary conditions of the Ontario-Hydro tests for the high quality conditions.

In summary, assessment of the TRACE code has revealed a significant under-prediction for the void fraction in large diameter pipes in the transition region between the bubbly/slug and annular/mist regimes. While the existing data is sufficient to indicate the existence of a deficiency in the TRACE interfacial drag model, there is not enough data to permit the selection or development of a new model to address this deficiency. Consequently, this task is being put in place both to generate the needed data and to perform the model selection/.development necessary to improve TRACE's ability to predict void fraction in large diameter pipes.

In order to fulfill the requirement for the experimental tests, a detailed design of the experimental facility is completed and summarized in this report.

CHAPTER 2 EXPERIMENTAL FACILITY AND INSTRUMENTATION

An experimental facility was designed to measure the relevant two-phase parameters under low flow conditions in large diameter pipes. The major parameter of interest is the axial distribution of the time-averaged void fraction. Also of interest are inlet and outlet pressures and temperatures as well as the pressure drop along the test section. This section provides an overall idea about the facility design and instrumentation. Also, an isometric drawing of the facility is given.

2.1 Experimental Facility

The layout of the experimental loop for 0.152 m (6 in.) or 0.203 m (8 in.) test section diameters is shown in Figure 2.1. The test facility is designed as a large pipe diameter, and multi-purpose two-phase flow loop. The main components include a separator tank, a centrifugal pump, a test section, air injection system, magnetic flow meters, differential pressure transducers, gage pressure transducers and arch-type impedance-meters.

The liquid flow is supplied by a 75 hp centrifugal pump, capable of delivering up to 0.126 m^3/s (2000 gpm). Globe throttle valves (GV1 and GV2) are used to control the water flow rate, along with a by-pass valve (BV1). A pressure sensor (P1) is mounted at the pump discharge to monitor the pressure at this point.

The liquid flow rate is measured by electromagnetic flow-meter. A 0.152 m (6 in.) diameter flow-meter (M1) is used to measure the flow rate at the discharge of the pump. It is capable of measuring the water flow rate as high as 0.176 m^3/s (2800 gpm). The liquid is sent to a distribution manifold after it comes out of the flow-meter. Also, the temperature of the liquid is measured in this manifold (TC1).

The air flow is measured with either a rotameter or a venturi tube. Two ranges of air flow from 0.015-0.3 m/s and 0.15-2.0 m/s are measured using rotameters (Brooks Instruments). The venturi tubes (Flow-Dyne Subsonic Venturi) are placed in-parallel with the rotameters and are used to measure larger airflows. The venturi tubes are connected to a differential pressure cell and the pressure difference is then converted to flow rate through a manufacturer supplied conversion. The smaller sizes which are 0.5 in. and 1.5 in. diameter, cover flow rates from 0.03-0.5 m/s and 0.07-1.0 m/s, respectively. The largest venturi tube is 2 in. diameter and covers the upper range from 0.8-30 m/s. The accuracies of the rotameters are ± 2% full scale and the venturi meters are ±0.5% accurate.

The airflow enters the two-phase mixing chamber at the bottom of the test section. The air is injected into seven stainless steel sparger elements, 19 mm diameter, 1 m long, with a 10 micron porous size. The size of the air bubbles at the inlet is controlled by a secondary liquid flow flowing through the annuli of the three injection sites, j_{f2}, which is fixed at 1.0 m/s (locally in the annulus) for the present experiments. The relatively constant velocity liquid stream shears-off bubbles from the sparger surface to produce a uniform bubble size, approximately 1-2 mm in diameter. The primary water flow, j_{f1} is injected six ways from the side of the mixing section and directed upward along the outsides of the sparger annuli to mix with the sheared-off the bubbles, and secondary liquid flow. The total liquid superficial velocity in the test section is then the sum of the primary and secondary flows, $j_f = j_{f1} + j_{f2}$. A drawing of the air injection unit is shown in Figure 2.2.

Two round-pipe vertical test sections with different inner diameters of 0.152 m ID (6 in.) and 0.203 m ID (8 in.) round pipe are considered. Arch-type impedance-meters and pressure taps are located on the test section instrumentation ports. At the inlet of the test section, gage pressure of the mixture is measured by using a gage pressure transducer(P2). In the vertical section, the pressure difference along the whole length is measured via a differential pressure transducer (DPT). Figure 2.3 provides a schematic representation of the location of the measurement ports for each test section diameter.

At the end of the test section, another gage pressure transducer (P3) and thermocouple (TC2) are considered. A ball valve (BV2) is used to manipulate the pressure loss coefficient and control the pressure of the two-phase mixture in the test section.

Finally, the two-phase mixture is sent into a separator system. The separator system consists of two identical tanks with a diameter of 1.2 m (46 in.) and a height of 2.2 m (88 in.), which are interconnected to each other through a pipe of 0.3 m (46in.) diameter. The two-phase flow from the test section is sent into the discharge tank (Tank 1) where bulk of the air is separated. The flow is then diverted to the suction tank (Tank 2) where any unseparated air is removed. Figure 2.4 provides the details of the separator system.

2.2 Key Instrumentation

2.2.1 Magnetic Flow-meter

Magnetic flow-meter was selected for the measurement of water flow rate in the current test. Compared to the turbine or paddle wheel flow meter, magnetic flow meter is non-intrusive and do not have any moving parts. Therefore very low maintenance is required.

The selected detector-converter model has a velocity measurement accuracy of 0.5% of the measured value when the velocity is between 0.4 m/s and 10 m/s. It can be observed that the detector having size 0.152 m (6 in.) as well as 0.203m (8 in.) can be used. This high accuracy at low velocities can be achieved because of the adjustable span. The span can be adjusted anywhere between 0-1 m/s to 0 -10 m/s. Thus for the measurement of the lowest velocity in the 6 inch section i.e. 0.86 m/s the flow meter span can be adjusted to 0-1 m/s. If the measured value is greater than or equals to 40 % of the upper range of the span the accuracy is 0.5% of the measured value. The specifications of the flow-meter is listed below

Model:

YAMATAKE MagneW 30000 Plus Smart Electromagnetic Flowmeter
Detector: MGG18
Converter: MGG14C

Accuracy:	0.5 % of the measured value
Response Time:	0.5 second
Detector Size:	6 inch
Output:	4-20 mA
Electrode:	Stainless Steel 316
Piping connections:	Wafer type; ANSI 150

2.2.2 Gage Pressure Transducers

Gage pressure transducers are used to measure the local static pressures. Figure 2.1 shows the locations where gage pressures are measured. The specifications of this instrument are listed below.

Manufacturer: Rosemount
Model: 3051S1CG Scalable Ultra Gage Pressure Transmitter

Pressure Range:	-98 to 2070 kPa (-14.2 to 300 psi)
Minimum span:	10.34 kPa (1.5 psi)
Accuracy:	±0.025% of span
	For spans less than 10:1

$$\pm\left[0.005+0.0035\left(\frac{URL}{span}\right)\right]\%\text{ of span}$$

Absolute error when the span is minimum = 0.073 kPa

Response time:	100 ms
Out-put:	4-20 mA

2.2.3 Differential Pressure Transducers

Differential pressure transducer is used to measure the pressure drop over the test section. Location of the transducers is shown in Figure 2.1. The specifications of this instrument are listed below.

Manufacturer: Rosemount
Model: 3051S1CD Scalable Ultra Differential Pressure Transmitter

Pressure Range:	-62 to 62 kPa (-9.0 to 9.0 psi)
Minimum span:	0.311 kPa (0.046 psi)
Accuracy:	±0.025% of span
	For spans less than 10:1
	$\pm\left[0.005+0.0035\left(\frac{URL}{span}\right)\right]$% of span
Response time:	100 ms
Out-put:	4-20 mA

2.2.4 Thermocouples

The criterion adopted for the selection of thermocouple is that the system temperature fluctuations would be small. Hence, the time constant of thermocouple is not of importance. As a result, it has been decided to use an ungrounded thermocouple as this will prevent any electrical noise from the ambient to be picked. Therefore, an Omega ungrounded T-type thermocouple made from special limits of error material in a 1/8" with a stainless steel sheath is decided to be used for the measurements. The accuracy of the temperature measurements with this type thermocouple is around 0.5 °C.

2.2.5 Arch-type Impedance-meter

The impedance probe is the key instrument that is used in this study. An impedance void meter is a non-intrusive conductance type probe that utilizes the difference in electrical conductivity between the air and water. The reader can refer to NUREG/CR 5578* for more general information about the principles of impedance-meters. For a test section with tube geometry, pair of arch-type stainless steel plates is employed as the electrodes, and they are flush mounted against the inner wall of the test section. An alternating current is supplied to the electrodes and the electrodes are connected to the electronic circuit, which is specially designed so that the output voltage of the circuit is proportional to the measured impedance between the electrodes. The measured impedance is normalized by the following equation:

$$G^* = \frac{G_m - G_1}{G_0 - G_1}$$

*S. T. Revankar, M. Ishii, Y. Mi, M. L. Bertodano, Y. Xu, S. Kelly, V. H. Ransom, J. T. Han, Instrumentation for the PUMA Facility, US Nuclear Regulatory Commission, NUREG/CR-5578, PU/NE-98-3, March (1999).

where, G_m is the instantaneous two-phase mixture impedance, G_0 is the impedance when void fraction is zero (i.e. single phase water) and G_1 is the impedance when the void fraction is unity (i.e. single phase air). Finally, the volume averaged void fraction can be obtained from the measured impedance. Thus, the void fraction measured by the void meter is an instantaneous, area averaged void fraction. Figure 2.5 shows the variation of the instantaneous area averaged void fraction with respect to time. The time averaged void fraction is the mean of the time series signal obtained by the probe. The solid black lines in the graphs show the time averaged void fraction. The time averaged void fraction depends on the time interval over which the average is obtained. Hence sufficiently large time interval is chosen to give stable time averaged void fraction under steady state condition. However, in transient two phase flow, where the flow regime varies with time and axial location, moving mean time averaged void fraction is calculated to understand the transport of void.

Figures 2.6 and 2.7 present the assembly drawings and for the arch-type impedance meters. Each arch-type impedance meter consists of an acrylic flange, two electrodes and the lead wires to carry the signals two/from the electrodes. The electrodes are mounted inside the flange in an internal groove. Also, plugs are considered to attach conductivity probes in a future investigation.

Figures 2.8 and 2.9 show how these impedance meters are attached to the test section. Each flange has a raised face on one side and a lowered face on the other side. The test section tubes are attached to flanges that will match with these geometries. Thus, the assembly will be self aligning and disturbance to the flow will be prevented.

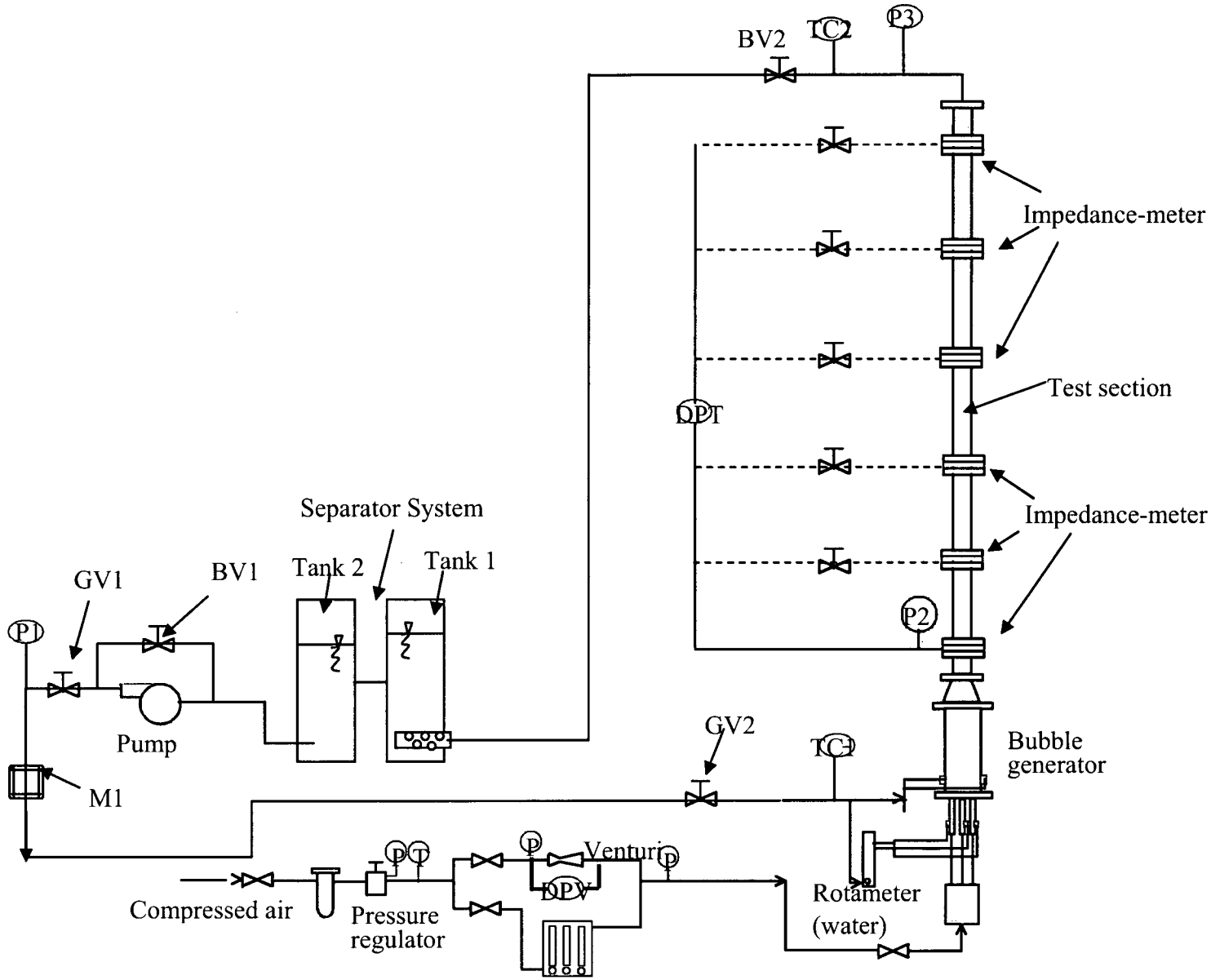

Figure 2.1: Schematic of the test facility with 6" test section

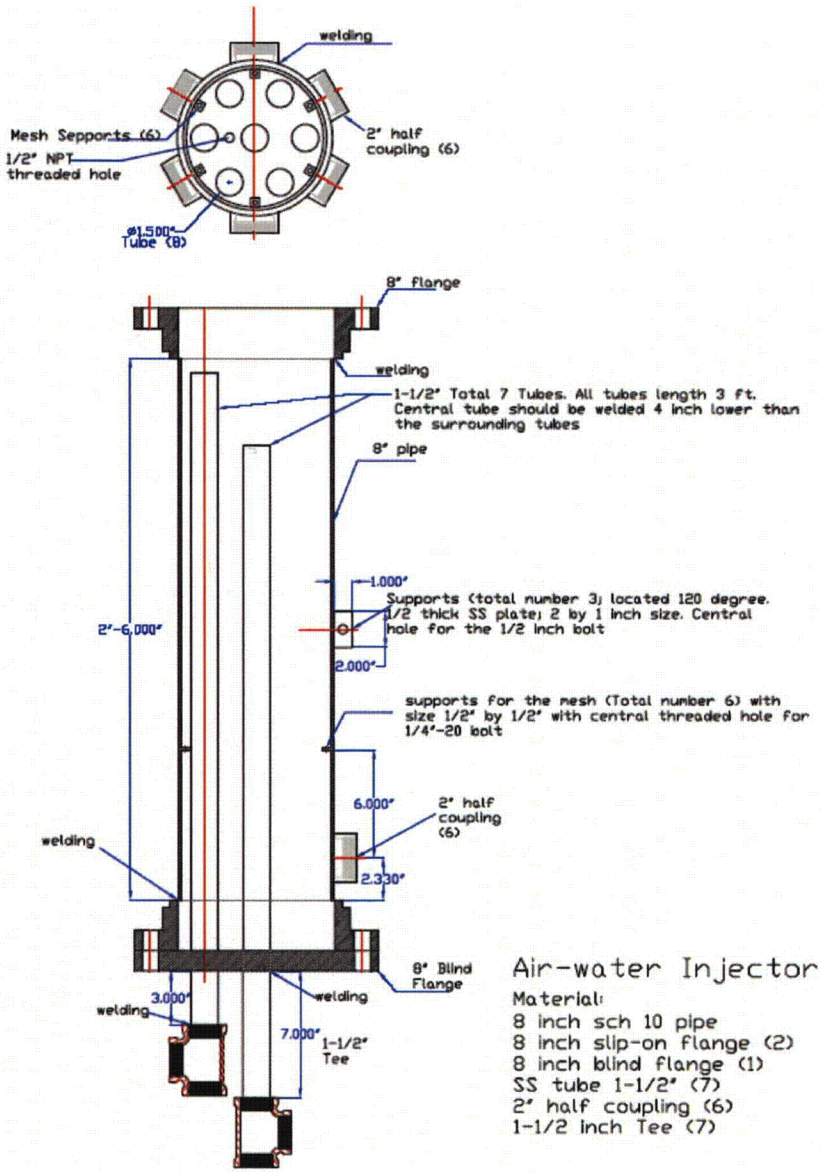

Figure 2.2: Injector Design for uniform air-bubble injection

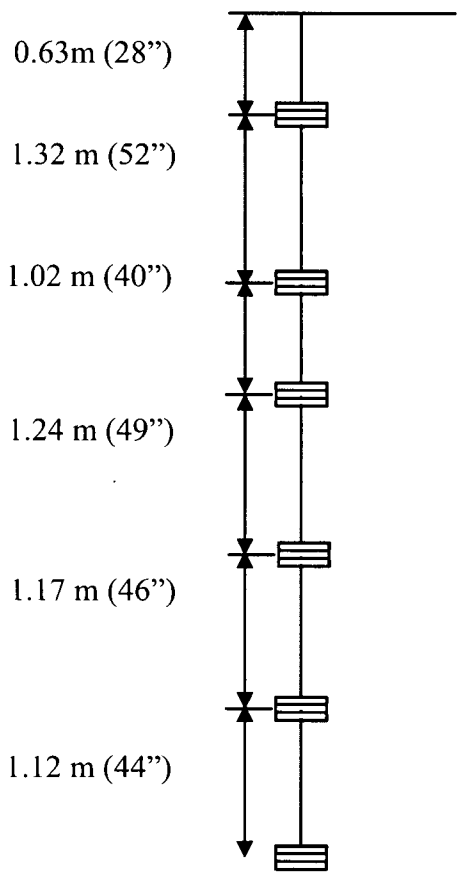

Figure 2.3: Schematic representation of the location of instrumentation ports.

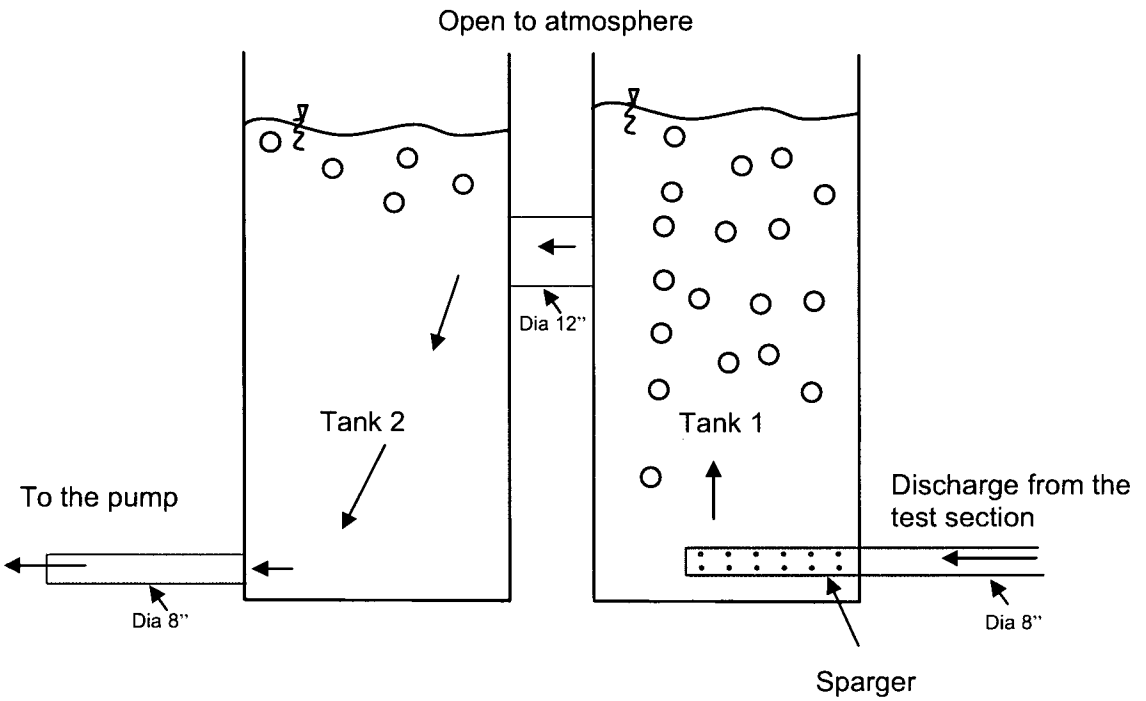

Figure 2.4: Schematic of the separation system

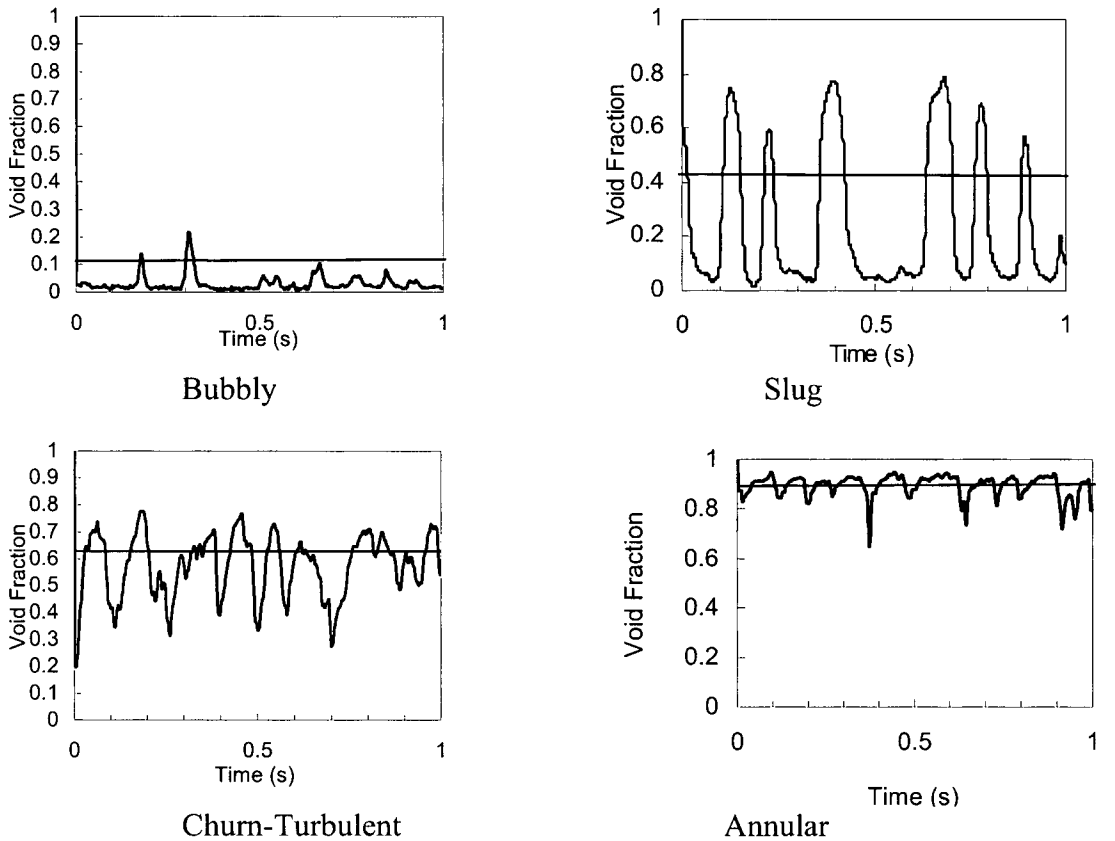

Figure 2.5 : Instantaneous area averaged void fraction measure by impedance meter. The solid lines show the mean value

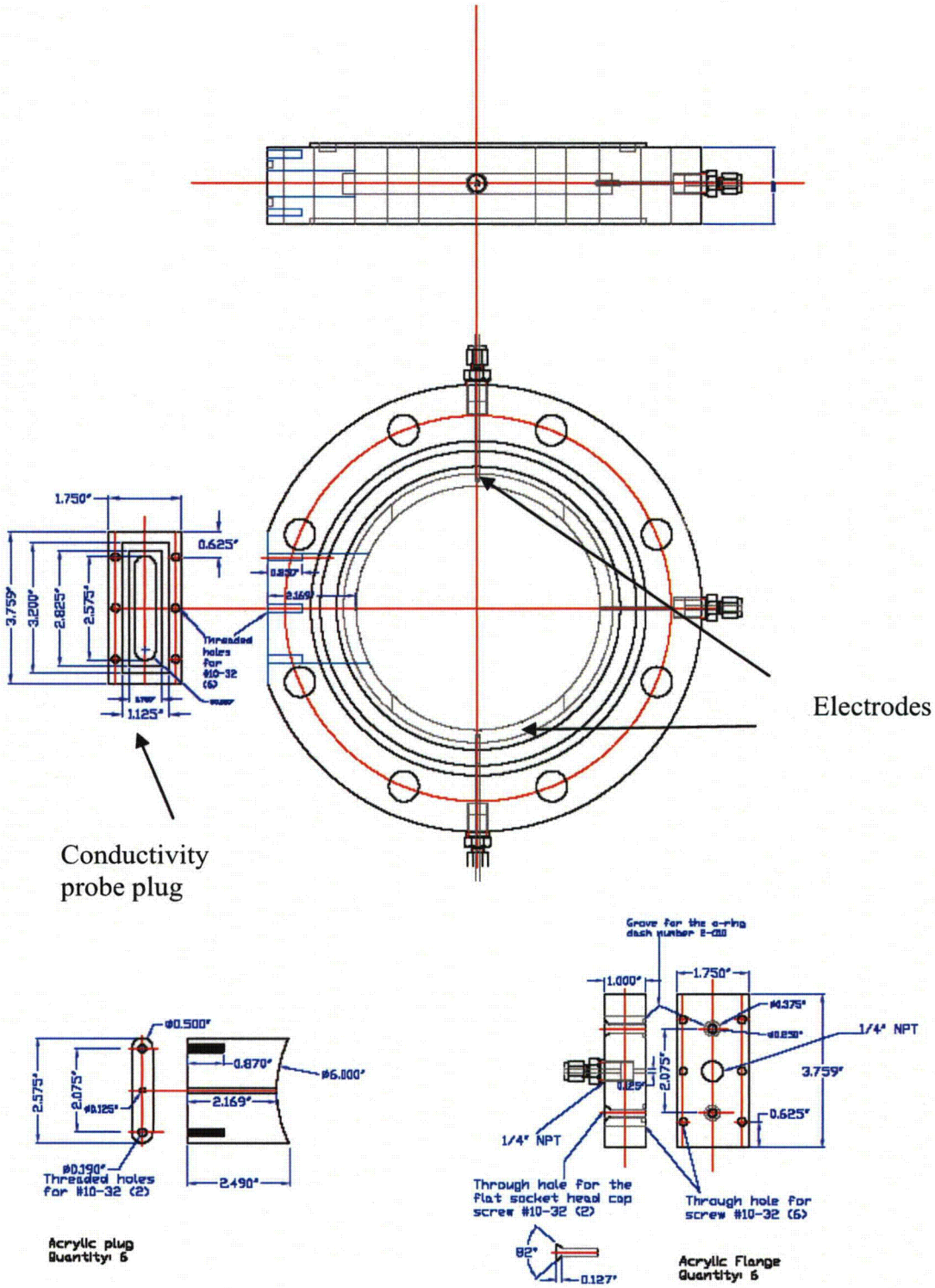

Figure 2.6: Technical drawing of the 6 in. instrumentation port

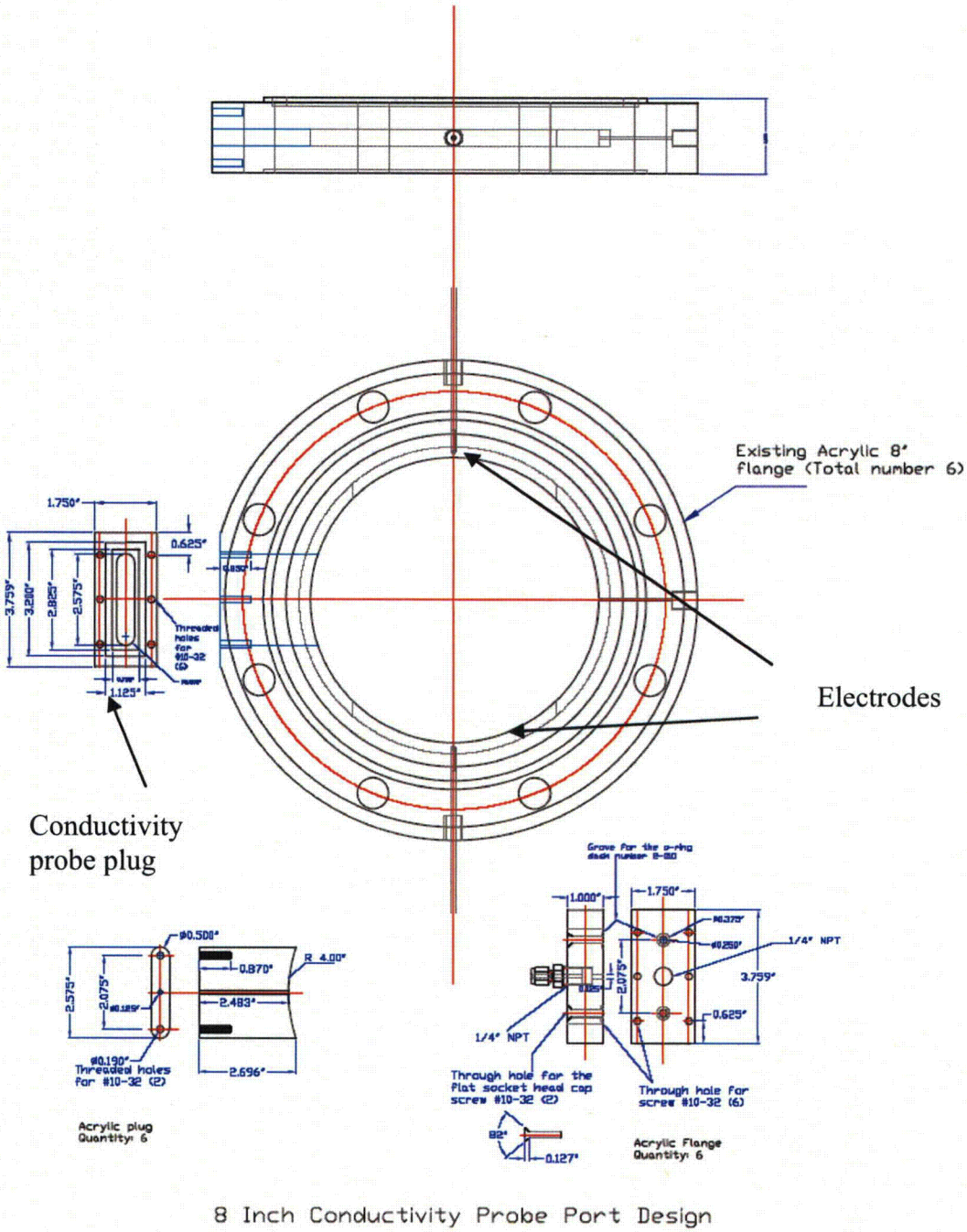

Figure 2.7: Technical drawing of the 8 in. instrumentation port

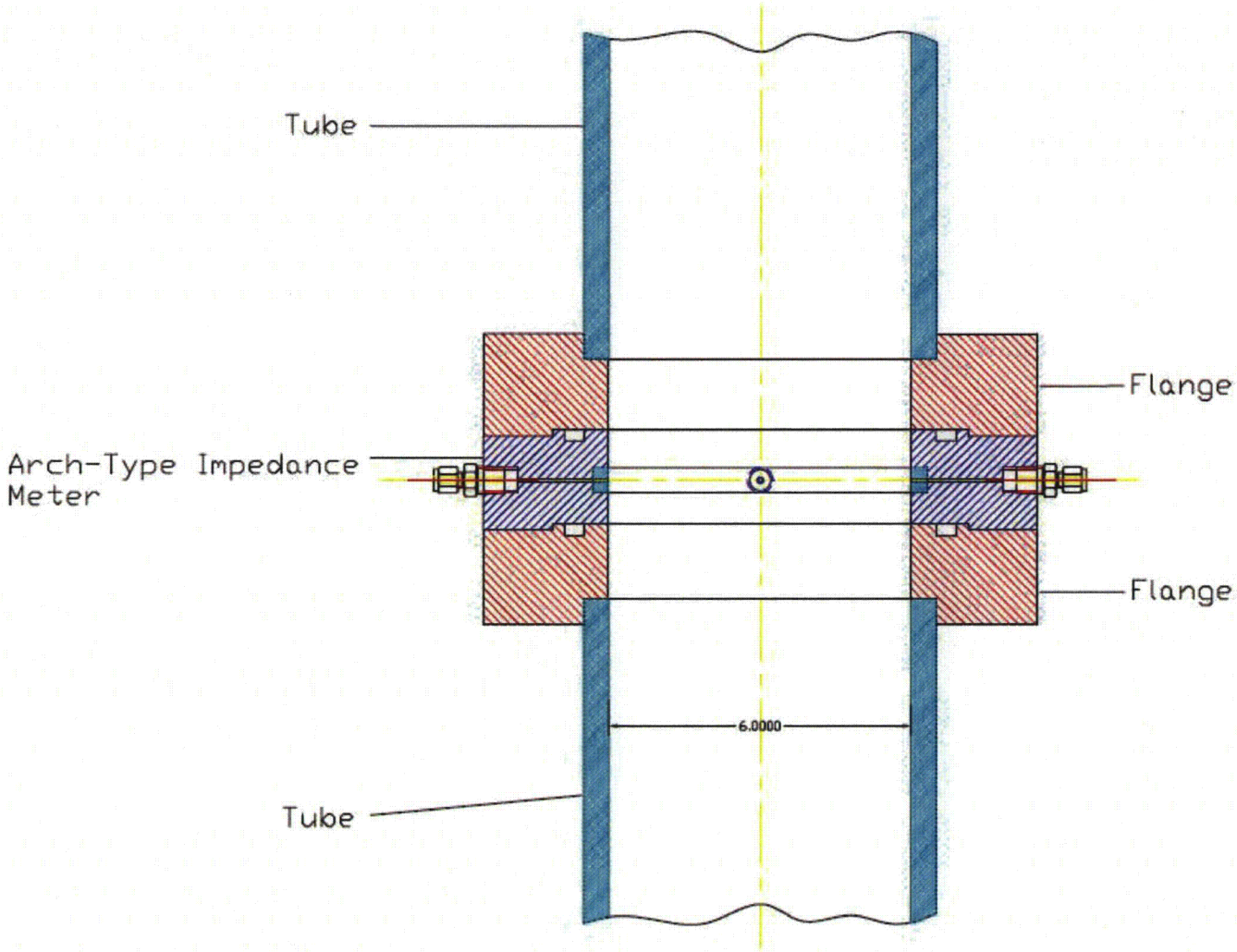

Figure 2.8: Arch-type impedance-meter for 6" tube assembled in the test section

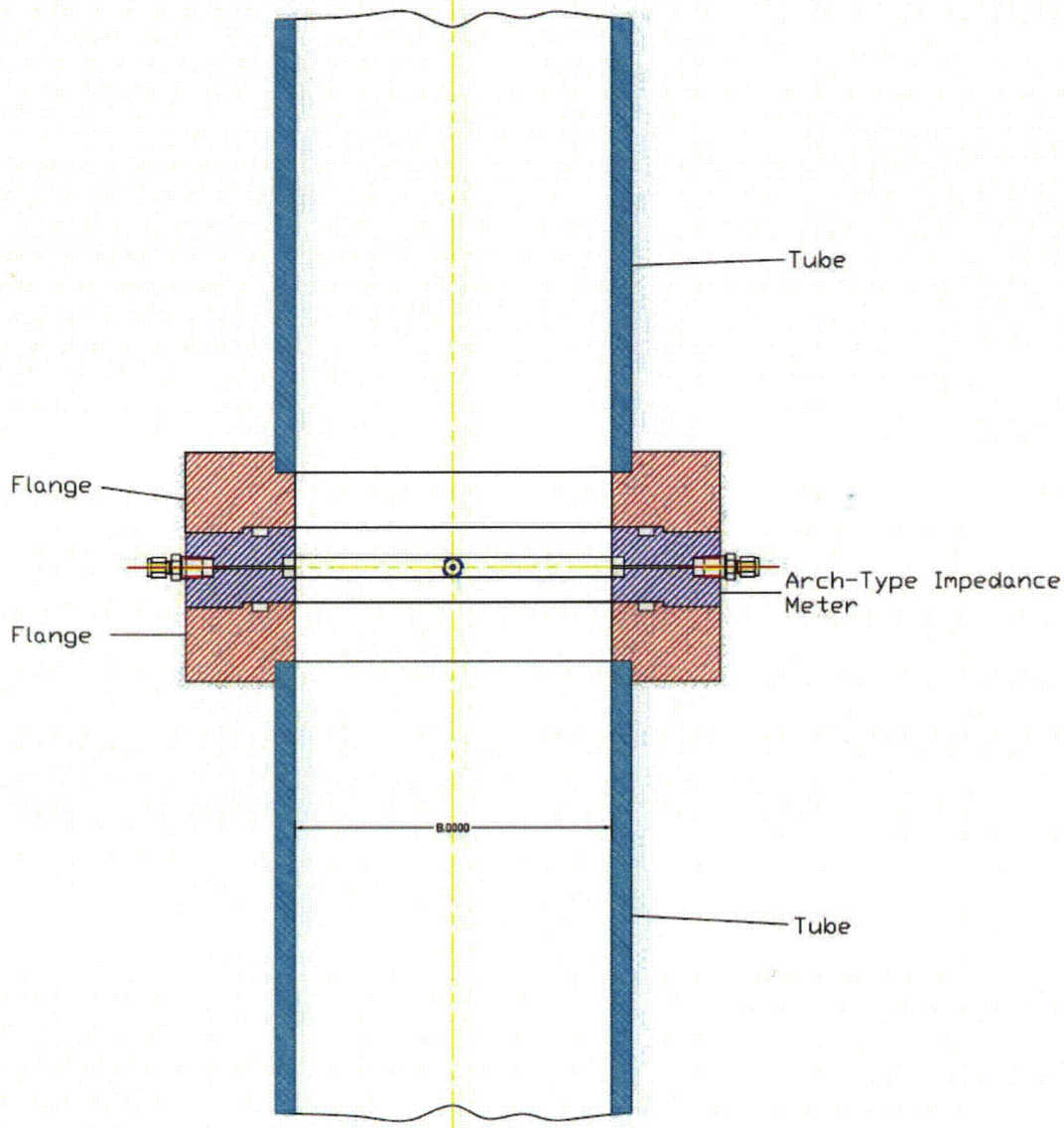

Figure 2.9: Arch-type impedance-meter for 8" tube assembled in the test section

CHAPTER 3 EXPERIMENTAL FACILITY OPERATING PROCEDURES

This section provides an overview of the experimental procedures. The procedures included in this section are the start-up, system initialization, data collection shut-down and data acceptance and validation procedures.

3.1 Start-up Procedures

3.1.1 Pre-check procedures

1. Ensure that water is available in the separator tanks
2. Check the availability of power supply to the following equipment
    a. Pump
    b. Data acquisition computer
    c. Data acquisition board
3. Check the programs on the data acquisition and control PCs
4. Turn on the DC power supply and adjust it to 24 VDC and check the availability of DC power in the following components
    a. M1
    b. P1
    c. P2
    d. DP1
    e. DP2
    f. DPT
5. Check the availability of the air
6. Check the position of the valves
    a. GV1 50% open
    b. GV2 50% open
    c. BV1 in closed position
    d. BV2 in open position
7. Turn on the electronic circuit system for impedance and parallel wire probes
8. Check and record the signals of each instrumentation
    a. M1
    b. P1
    c. P2
    d. DPT

e. Arch type impedance-meter (AIMP1) (This provides the value when the impedance-meters are exposed to full-air)
f. AIMP2
g. AIMP3
h. AIMP4
i. AIMP5
j. AIMP6
k. TC1
l. TC2

3.1.2 System start-up procedures

1. Start the pump
2. Adjust GV1 and GV2 such that water velocity reaches 2 m/s
3. Purge the air out of the following pressure sensor lines by using the priming valves that are integrated with the DPT
4. After all the air is washed out from the test section take reading from the following instruments as for the full water value response
    a. AIMP1
    b. AIMP2
    c. AIMP3
    d. AIMP4
    e. AIMP5
    f. AIMP6

3.2 System Initialization Procedures

1. Adjust single phase liquid flow-rate (Q_i) by using GV1, GV2 and BV1
2. Adjust the water flow rate through the secondary kiquid flow (j_{f2})
3. Adjust the air-flow rotameters until desired amount of air flow is obtained

3.3 Shut-down Procedures

1. After the test is over, stop recording and save data
2. Turn-off the pump
3. Check the signals of the following instruments
    a. M1
    b. DPT
    c. AIMP1
    d. AIMP2
    e. AIMP3
    f. AIMP4
    g. AIMP5
    h. AIMP6

4. Increase air flow-rate and let air drag the water through the test section into the separator tanks
5. Check and record the signals from the following instruments
    a. AIMP1
    b. AIMP2
    c. AIMP3
    d. AIMP4
    e. AIMP5
    f. AIMP6

CHAPTER 4 SUMMARY

The USNRC has identified a deficiency in the system analysis code TRACE for the prediction of the void fraction in the chimney section of an ESBWR. This deficiency was attributed to the models that are being used to estimate interfacial shear in the transition region between bubbly/slug and annular/mist regimes. Also, it was identified that while the existing data was sufficient to indicate the existence of a deficiency in the TRACE interfacial drag model, there was not enough data to permit the selection or development of a new model to address this deficiency. Therefore, the need for a larger database was established wit the following objectives

1. To establish a database of void fraction measurements for both pool and upflow conditions for a wide range of pipe diameters and flow conditions using published data;
2. To augment this database with new air-water data extends into the transition region between bubbly/slug and annular/mist regimes;
3. To either select or develop a model for interfacial shear that significantly improves the ability of TRACE to predict void fraction in large diameter pipes.

In order to fulfill the second objective a detailed design of the experimental facility as well as the operating procedures are completed and summarized in this report. The test facility consists of two different diameter test sections of 152.4 mm and 203.3 mm in diameter. Only one of the test sections is installed at a given time. The total height of the test section is about 6.5 m. Magnetic flow-meters and air flow rotameters are considered for liquid and air flow-rate measurements. Meanwhile, impedance-meters with arch shaped electrodes are used to measure the area-averaged void fraction data.

Pressure and differential pressure transducers as well as thermocouples are included in the facility to monitor the state of the fluid.