HITACHI

GE Hitachi Nuclear Energy

James C. Kinsey
Vice President, ESBWR Licensing

PO Box 780 M/C A-55
Wilmington, NC 28402-0780
USA

T 910 675 5057
F 910 362 5057
jim.kinsey@ge.com

MFN 06-407
Supplement 7

Docket No. 52-010

April 30, 2008

U.S. Nuclear Regulatory Commission
Document Control Desk
Washington, D.C. 20555-0001

Subject: Response to Portion of NRC Request for Additional Information Letter No. 38 Related to ESBWR Design Certification Application – Structural Analysis – NRC Comment on Response to NRC RAI 3.8-17 S02

The purpose of this letter is to submit the GE Hitachi Nuclear Energy (GEH) partial response to the U.S. Nuclear Regulatory Commission (NRC) Request for Additional Information (RAI) received from the NRC via Reference 1 (RAI 3.8-17 S02).

Enclosure 1 contains the GEH response to NRC RAI 3.8-17 S02 that was received from the NRC on May 24, 2007, via e-mail (Reference 1). Previously GEH received RAI 3.8-17 S01, on December 14, 2006, via e-mail from the NRC (Reference 3), to which GEH responded, on February 1, 2007, via MFN 06-407, Supplement 1 (Reference 2). Original RAI 3.8-17 was received by GEH, on June 23, 2006, via MFN 06-197, NRC Letter 38 (Reference 5), to which GEH responded, on November 8, 2006, via MFN 06-407 (Reference 4).

Verified DCD changes associated with this RAI response are identified in the enclosed DCD markups by enclosing the text within a black box. The marked-up pages may contain unverified changes in addition to the verified changes resulting from this RAI response. Other changes shown in the markup(s) may not be fully developed and approved for inclusion in DCD Revision 5.

D068
NRO

If you have any questions or require additional information, please contact me.

Sincerely,

James C. Kinsey

James C. Kinsey
Vice President, ESBWR Licensing

References:

1. E-mail from Chandu Patel, U.S. Nuclear Regulatory Commission to GEH, NRC Comment on Response to NRC RAI 3.8-17 S01, dated May 24, 2007

2. MFN 06-407, Supplement 1, from Jim Kinsey to the U.S. Nuclear Regulatory Commission, *Response to Portion of NRC Request for Additional Information Letter No. 38 Related to ESBWR Design Certification Application – Structural Analysis - RAI Numbers 3.8-17 S01, 3.8-24 S01, 3.8-28 S01, 3.8-44 S01, 3.8-59 S01, 3.8-62 S01, 3.8-65 S01, 3.8-69 S01, 3.8-76 S01, 3.8-77 S01, 3.8-79 S01, 3.8-80 S01, 3.8-84 S01, 3.8-95 S01, 3.8-97 S01, 3.8-101 S01, 3.8-102 S01 and 3.8-103 S01 – Supplement 1*, dated February 1, 2007

3. E-mail from the U.S. Nuclear Regulatory Commission to GEH, NRC Comment on Response to NRC RAI 3.8-17, dated December 14, 2006

4. MFN 06-407, from David H. Hinds to the U.S. Nuclear Regulatory Commission, *Response to Portion of NRC Request for Additional Information Letter No. 38 Related to ESBWR Design Certification Application – Structural Analysis - RAI Numbers 3.8-17, 3.8-24, 3.8-28, 3.8-32, 3.8-33 through 3.8-38, 3.8-44, 3.8-59, 3.8-62, 3.8-65, 3.8-69, 3.8-73, 3.8-76, 3.8-77, 3.8-79, 3.8-80, 3.8-81, 3.8-84, 3.8-85, 3.8-86, 3.8-88, 3.8-89, 3.8-92, 3.8-93 through 3.8-97, 3.8-99, 3.8-101, 3.8-102 and 3.8-103*, dated November 8, 2006

5. MFN 06-197 from Lawrence Rossbach, Project Manager, ESBWR/ABWR Projects Branch, Division of New Reactor Licensing, Office of Nuclear Reactor Regulation, to David H. Hinds, *Request for Additional Information Letter No. 38 Related to ESBWR Design Certification Application [RAI requesting a description of the numerical analytical techniques for containment regions around penetrations]*, dated June 23, 2006

Enclosure:

1. Response to Portion of NRC Request for Additional Information Letter No. 38 Related to ESBWR Design Certification Application -- Structural Analysis -- RAI 3.8-17 S02

cc:	AE Cubbage	USNRC (with enclosure)
	RE Brown	GEH/Wilmington (with enclosure)
	GB Stramback	GEH/San Jose (with enclosure)
	DH Hinds	GEH/Wilmington (with enclosure)
	EDRF	0000-0078-7871, Rev. 2

ENCLOSURE 1

MFN 06-407
Supplement 7

Response to Portion of NRC Request for Additional Information Letter No. 38 Related to ESBWR Design Certification Application

Structural Analysis

RAI Number 3.8-17 S02

Verified DCD changes associated with this RAI response are identified in the enclosed DCD markups by enclosing the text within a black box. The marked-up pages may contain unverified changes in addition to the verified changes resulting from this RAI response. Other changes shown in the markup(s) may not be fully developed and approved for inclusion in DCD Revision 5.

Original Response and Supplement 1 previously submitted under MFNs 06-407 and 06-407, Supplement 1 are included to provide historical continuity during review

NRC RAI 3.8-17

DCD Section 3.8.1.4.1.1.3 states that numerical analytical techniques were used to determine the state of stress and behavior of the containment around the openings at major penetrations. DCD Section 3.8.2.1.3 also states this, and adds, "The analysis of the area around the penetrations consists of a three-dimensional finite element analysis with boundaries extending to a region where the discontinuity effects of the opening are negligible."

Please provide a description of these analyses, including pictures of the finite element models, identification of the loading conditions, the types of analyses conducted, a summary of the results of the analyses, and comparison to Code acceptance criteria. Include this information in DCD Section 3.8 and/or Appendix 3G.

In addition, (1) identify the applicable detailed report/calculation (number, title, revision and date, and brief description of content) that will be available for audit by the staff, and (2) reference this report/calculation in the DCD.

GE Response

Figure 3.8-17(1) is a flow chart for the design of RCCV wall penetrations. This flow chart is the same as DCD Tier 2 Figure 3G.1-39, *Flow Chart for Structural Analysis and Design*, with the following exceptions:

- Stress analyses are performed using a local Finite Element (FE) analysis model which includes the local area around the opening.
- In the local model FE analyses, displacements which are obtained from the RB/FB global model stress analyses are prescribed to the boundary nodes in order to consider the constraints of items not included in the model.
- Local loads which are not considered in the analysis of the global model are considered, if necessary.

Figure 3.8-17(2) is a sketch showing reinforcements in the RCCV wall around a large opening. The area around the opening is reinforced by main hoop and vertical reinforcing bars and additional bars, which are required to resist concentrated stresses around the opening. Additional diagonal bars are installed to add reinforcement in the areas where hoop and vertical bars are terminated.

(1) The applicable detailed report/calculation that will be available for the NRC audit is SER-ESB-045 *Design Report for RCCV Wall around UD Personnel Airlock Opening, Rev.0*, which contains the calculations of the containment around an opening.

(2) Since this information exists as part of GE's internal tracking system, it is not necessary to add it to the DCD.

No DCD change was made in response to this RAI.

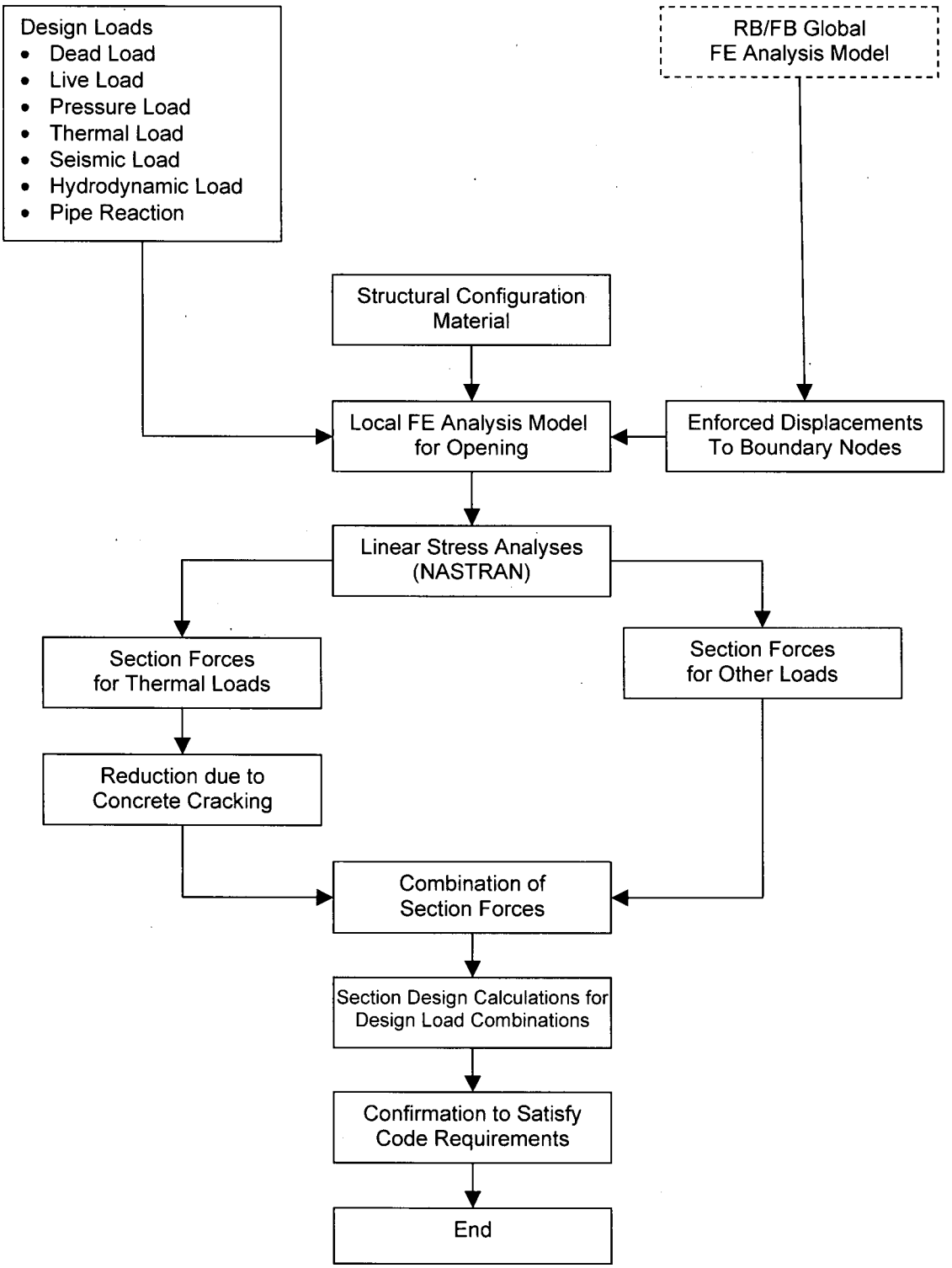

Figure 3.8-17(1) Flow Chart for the Design of RCCV Wall Penetrations

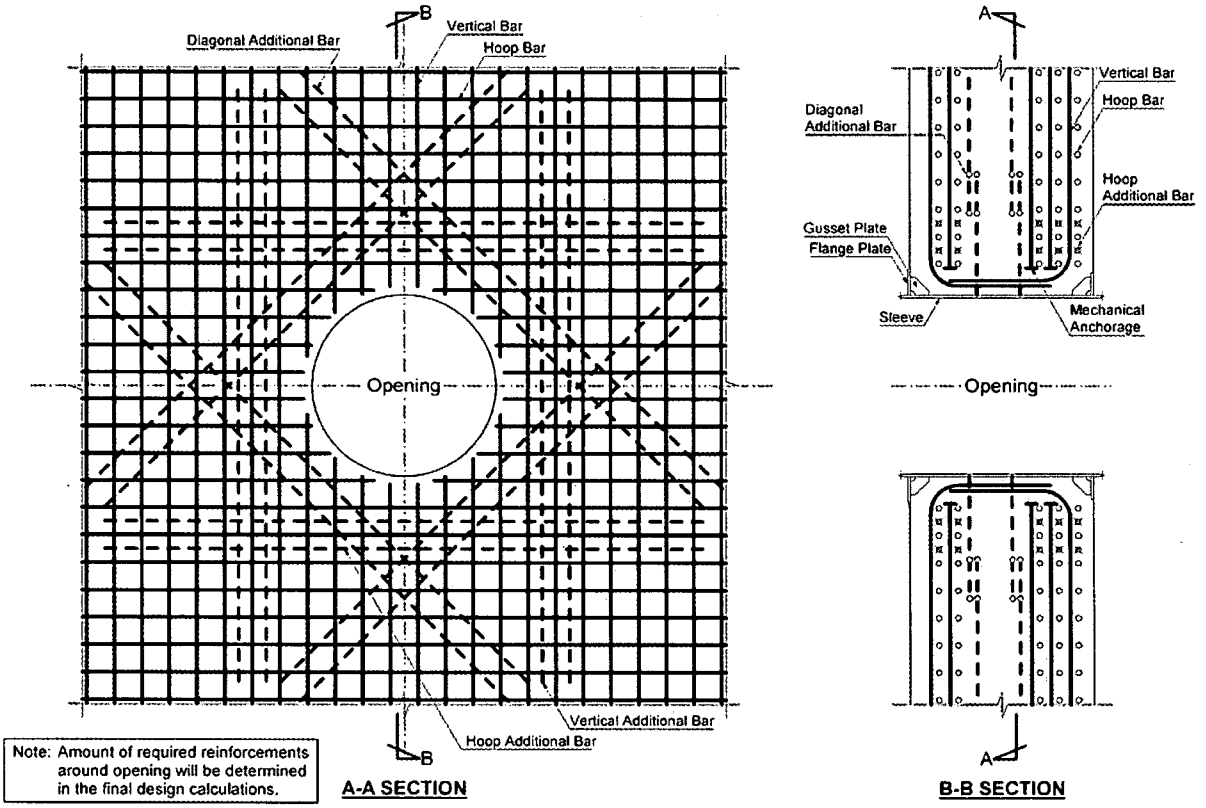

Figure 3.8-17(2) RCCV Wall Penetration Reinforcement Details

NRC RAI 3.8-17, Supplement 1

NRC Assessment Following the December 14, 2006 Audit

Some information requested in the RAI was not provided: figures showing the finite element models used, a summary of the types of analyses, a summary of results of the analyses, and comparison to Code acceptance criteria. Since this is a design certification, a representative design for one or more major penetrations should have been performed, and thus this information should be available. However, Figure 3.8-17(2) has a note indicating that the amount of required reinforcements around opening will be determined in the final design calculations; please explain what this means. Also, as indicated in the RAI, a summary of the information requested in the RAI should be presented in the DCD. If the analysis and design is not completed will this be a COL Action Item, to be reviewed in the future?

Staff needs to review SER-ESB-045 Design Report for RCCV Wall around UD Personnel Airlock Opening, Rev. 0.

During the audit, a draft supplemental response by GE was provided which will revise Figure 3.8-17(2). In addition, the analysis and design for the Upper Drywell Personnel Airlock was completed and available for review.

GE Response

Detailed design calculations of the containment around the UD Personnel Airlock Opening were performed as follows:

The detail of the local FE model of the RCCV wall around the opening is shown in Figure 3.8-17(3). The model is composed of the concrete wall, the steel liner plate and the steel opening sleeve. The concrete wall and steel liner plate are modeled by SHELL elements, and the opening sleeve is modeled by ROD elements. Because the analysis model is the local FE model of the RCCV, the boundary conditions are applied at the periphery of the model and at the connections with the surrounding slab and wall as shown Figure 3.8-17(4). The enforced displacements calculated from the RBFB global FE model analysis results are applied to the nodes shown in Figure 3.8-17(4) at the boundary conditions.

Displacements for several loads at the sections illustrated in Figure 3.8-17(5) are shown in Figures 3.8-17(6) through 3.8-17(9). Figures 3.8-17(11) through 3.8-17(14) show the element forces and moments at the sections shown in Figure 3.8-17(10). Element forces and moments illustrated in the figures are defined in relation to the element coordinate system shown in Figure 3.8-17(15).

Element forces and moments of individual loads were combined in accordance with the load combinations shown in Table 3.8-17(1) for section design calculations.

Figures 3.8-17(16) through 3.8-17(18) show typical sections of the RCCV wall around the UD Personnel Airlock Opening. Primary reinforcements are arranged orthogonally in two directions in each section. In addition, diagonal reinforcements are arranged at four corners.

Based on the rebar arrangement shown in Figures 3.8-17(16) through 3.8-17(18), stresses in the RCCV wall around the opening were evaluated. The calculated stresses are less than the allowable values specified in ASME Code Section III, Division 2, Subsection CC- 3000.

A representative sketch of the reinforcement around equipment hatch/personnel airlock openings will be added to DCD Tier 2 as Figure 3.8-2 as stated in the response to NRC RAI 3.8-3, Supplement 3.

DCD Impact

No DCD change was made in response to this RAI Supplement.

Table 3.8-17(1) Design Load Combinations for RCCV Wall Around UD Personnel Airlock Opening

					Combination No. In DCD	Live Load				Pressure Load									Thermal Load											Seismic Load	Pipe Reaction		Hydrodynamic Load								Acceptance Criteria
													LOCA								LOCA (GDCS Condition2*1)													SRV		PS	CO		CH		
						Dead Load	Normal Operation	Snow Load	Soil Pressure (Static)	Normal Operation	Test (Max.)	Test (Diff.)	After 5 seconds	After 6 minutes	After 10 hours	After 72 hours	HELB in MS Tunnel	Normal Operation		After 5 sec.		After 6 minutes		After 10 hours		After 72 hours				SRV	LOCA	Positive	Negative		Positive	Negative	Positive	Negative	
						Summer	Winter	Summer	Winter	Summer	Winter	Summer	Winter	Summer	Winter	Summer	Winter																									
						DLO	LLO	SNL	SPO	POL	PTL1	PTL2	PL1	PL2	PL3	PL4	PLMS	TLS0	TLW0	TLS5	TLW5	TLS6	TLW6	TLS7	TLW7	TLS8	TLW8	KSO	RLS	RLL	HOS1	HOS2	HLPS	HLO1	HLO2	HLC1	HLC2	
CV-1	Test																																								
	Maximum Pressure			1100	CV-1	1.0	1.0	1.0	1.0		1.0																													S
	Differential Pressure			1200	NA	1.0	1.0	1.0	1.0			1.0																												S
CV-3	Normal Operation																																								
		Summer		2010	NA	1.0	1.0	1.0	1.0	1.0								1.0																						S
			SRVPos.	2011	NA	1.0	1.0	1.0	1.0	1.0								1.0											1.0		1.0									S
			SRVNeg.	2012	NA	1.0	1.0	1.0	1.0	1.0								1.0											1.0			1.0								S
		Winter		2020	NA	1.0	1.0	1.0	1.0	1.0									1.0																					S
			SRVPos.	2021	NA	1.0	1.0	1.0	1.0	1.0									1.0										1.0		1.0									S
			SRVNeg.	2022	NA	1.0	1.0	1.0	1.0	1.0									1.0										1.0			1.0								S
		w/o Temp		2000	NA	1.0	1.0	1.0	1.0	1.0																														S
			SRVPos.	2001	NA	1.0	1.0	1.0	1.0	1.0																			1.0		1.0									S
			SRVNeg.	2002	NA	1.0	1.0	1.0	1.0	1.0																			1.0			1.0								S

Note *1: GDCS Pool Water Depth is 305mm (12in.).

Table 3.8-17(1) Design Load Combinations for RCCV Wall Around UD Personnel Airlock Opening (Continued)

						Combination No. In DCD	Live Load				Pressure Load									Thermal Load												Seismic Load	Pipe Reaction		Hydrodynamic Load									Acceptance Criteria
							Dead Load	Normal Operation	Snow Load	Soil Pressure (Static)	Normal Operation	Test (Max.)	Test (Diff.)	LOCA After 5 seconds	LOCA After 6 minutes	LOCA After 10 hours	LOCA After 72 hours	HELB in MS Tunnel	Normal Operation Summer	Normal Operation Winter	LOCA (GDCS Condition2*1) After 5 sec. Summer	After 5 sec. Winter	After 6 minutes Summer	After 6 minutes Winter	After 10 hours Summer	After 10 hours Winter	After 72 hours Summer	After 72 hours Winter					SRV	LOCA	SRV Positive	SRV Negative	PS	CO Positive	CO Negative	CH Positive	CH Negative	
							DLO	LLO	SNL	SPO	POL	PTL1	PTL2	PL1	PL2	PL3	PL4	PLMS	TLS0	TLW0	TLS5	TLW5	TLS6	TLW6	TLS7	TLW7	TLS8	TLW8	KSO	RLS	RLL	HOS1	HOS2	HLPS	HLO1	HLO2	HLC1	HLC2	
CV-7	Abnormal ;LOCA (1.5P)																																											
	5 sec. After	GDCS Condition2	Summer	SRVPos.	6131	NA	1.0	1.0	1.0	1.0				1.5							1.0									1.0	1.0	1.0		1.5					U
				SRVNeg.	6132	NA	1.0	1.0	1.0	1.0				1.5							1.0									1.0	1.0		1.0	1.5					U
			Winter	SRVPos.	6141	NA	1.0	1.0	1.0	1.0				1.5								1.0								1.0	1.0	1.0		1.5					U
				SRVNeg.	6142	NA	1.0	1.0	1.0	1.0				1.5								1.0								1.0	1.0		1.0	1.5					U
			w/o Temp	SRVPos.	6101	NA	1.0	1.0	1.0	1.0				1.5																1.0	1.0	1.0		1.5					U
				SRVNeg.	6102	NA	1.0	1.0	1.0	1.0				1.5																1.0	1.0		1.0	1.5					U
	6 min. After	GDCS Condition2	Summer	(CO+SRV)Pos.	6231	NA	1.0	1.0	1.0	1.0					1.5								1.0							1.0	1.0	1.0			1.5				U
				(CO+SRV)Neg.	6232	NA	1.0	1.0	1.0	1.0					1.5								1.0							1.0	1.0		1.0			1.5				U
			Winter	(CO+SRV)Pos.	6241	CV-7a	1.0	1.0	1.0	1.0					1.5									1.0						1.0	1.0	1.0			1.5				U
				(CO+SRV)Neg.	6242	NA	1.0	1.0	1.0	1.0					1.5									1.0						1.0	1.0		1.0			1.5			U
			w/o Temp	(CO+SRV)Pos.	6201	NA	1.0	1.0	1.0	1.0					1.5															1.0	1.0	1.0			1.5				U
				(CO+SRV)Neg.	6202	NA	1.0	1.0	1.0	1.0					1.5															1.0	1.0		1.0			1.5			U
	10 hours After	GDCS Condition2	Summer	(CH+SRV)Pos.	6331	NA	1.0	1.0	1.0	1.0						1.5									1.0					1.0	1.0	1.0					1.5		U
				(CH+SRV)Neg.	6332	NA	1.0	1.0	1.0	1.0						1.5									1.0					1.0	1.0		1.0					1.5	U
			Winter	(CH+SRV)Pos.	6341	NA	1.0	1.0	1.0	1.0						1.5										1.0				1.0	1.0	1.0					1.5		U
				(CH+SRV)Neg.	6342	NA	1.0	1.0	1.0	1.0						1.5										1.0				1.0	1.0		1.0					1.5	U
			w/o Temp	(CH+SRV)Pos.	6301	NA	1.0	1.0	1.0	1.0						1.5														1.0	1.0	1.0					1.5		U
				(CH+SRV)Neg.	6302	NA	1.0	1.0	1.0	1.0						1.5														1.0	1.0		1.0					1.5	U
	72 hours After	GDCS Condition2	Summer	(CH+SRV)Pos.	6431	NA	1.0	1.0	1.0	1.0							1.5										1.0			1.0	1.0	1.0					1.5		U
				(CH+SRV)Neg.	6432	NA	1.0	1.0	1.0	1.0							1.5										1.0			1.0	1.0		1.0					1.5	U
			Winter	(CH+SRV)Pos.	6441	CV-7b	1.0	1.0	1.0	1.0							1.5											1.0		1.0	1.0	1.0					1.5		U
				(CH+SRV)Neg.	6442	NA	1.0	1.0	1.0	1.0							1.5											1.0		1.0	1.0		1.0					1.5	U
			w/o Temp	(CH+SRV)Pos.	6401	NA	1.0	1.0	1.0	1.0							1.5													1.0	1.0	1.0					1.5		U
				(CH+SRV)Neg.	6402	NA	1.0	1.0	1.0	1.0							1.5													1.0	1.0		1.0					1.5	U
	HELB in MS Tunnel		Summer		6511	NA	1.0	1.0	1.0	1.0								1.5	1.0																				U
			Winter		6521	NA	1.0	1.0	1.0	1.0								1.5		1.0																			U
			w/o Temp		6501	NA	1.0	1.0	1.0	1.0								1.5																					U

Note *1: GDCS Pool Water Depth is 305mm (12in.).

Table 3.8-17(1) Design Load Combinations for RCCV Wall Around UD Personnel Airlock Opening (Continued)

						Combination No. In DCD	Live Load				Pressure Load									Thermal Load													Pipe Reaction		Hydrodynamic Load									Acceptance Criteria
														LOCA								LOCA (GDCS Condition2*1)															SRV		PS	CO		CH		
							Dead Load	Normal Operation	Snow Load	Soil Pressure (Static)	Normal Operation	Test (Max.)	Test (Diff.)	After 5 seconds	After 6 minutes	After 10 hours	After 72 hours	HELB in MS Tunnel	Normal Operation				After 5 sec.		After 6 minutes		After 10 hours		After 72 hours		Seismic Load	SRV	LOCA	Positive	Negative		Positive	Negative	Positive	Negative		
							Summer	Winter	Summer	Winter	Summer	Winter	Summer	Winter	Summer	Winter	Summer	Winter																										
							DLO	LLO	SNL	SPO	POL	PTL1	PTL2	PL1	PL2	PL3	PL4	PLMS	TLS0	TLW0	TLS5	TLW5	TLS6	TLW6	TLS7	TLW7	TLS8	TLW8	KSO	RLS	RLL	HOS1	HOS2	HLPS	HLO1	HLO2	HLC1	HLC2		
CV-11	Abnormal/Extreme Environmental																																											
	5 sec. After	GDCS	Summer	SRVPos.	7131	NA	1.0	1.0	0.75	1.0				1.0							1.0									1.0	1.0	1.0	1.0		1.0					U
		Condition2	Winter	SRVPos.	7141	NA	1.0	1.0	0.75	1.0				1.0								1.0								1.0	1.0	1.0	1.0		1.0					U
			w/o Temp	SRVPos.	7101	NA	1.0	1.0	0.75	1.0				1.0																1.0	1.0	1.0	1.0		1.0					U
	6 min. After	GDCS	Summer	(CO+SRV)Pos.	7231	NA	1.0	1.0	0.75	1.0					1.0								1.0							1.0	1.0	1.0	1.0			1.0				U
		Condition2	Winter	(CO+SRV)Pos.	7241	CV-11a	1.0	1.0	0.75	1.0					1.0									1.0						1.0	1.0	1.0	1.0			1.0				U
			w/o Temp	(CO+SRV)Pos.	7201	NA	1.0	1.0	0.75	1.0					1.0															1.0	1.0	1.0	1.0			1.0				U
	10 hours After	GDCS	Summer	(CH+SRV)Pos.	7331	NA	1.0	1.0	0.75	1.0						1.0									1.0					1.0	1.0	1.0	1.0					1.0		U
		Condition2	Winter	(CH+SRV)Pos.	7341	NA	1.0	1.0	0.75	1.0						1.0										1.0				1.0	1.0	1.0	1.0					1.0		U
			w/o Temp	(CH+SRV)Pos.	7301	NA	1.0	1.0	0.75	1.0						1.0														1.0	1.0	1.0	1.0					1.0		U
	72 hours Afte	GDCS	Summer	(CH+SRV)Pos.	7431	NA	1.0	1.0	0.75	1.0							1.0										1.0			1.0	1.0	1.0	1.0					1.0		U
		Condition2	Winter	(CH+SRV)Pos.	7441	CV-11b	1.0	1.0	0.75	1.0							1.0											1.0	1.0	1.0	1.0	1.0	1.0					1.0		U
			w/o Temp	(CH+SRV)Pos.	7401	NA	1.0	1.0	0.75	1.0							1.0												1.0	1.0	1.0	1.0					1.0		U
	HELB		Summer		7511	NA	1.0	1.0	0.75	1.0								1.0	1.0										1.0											U
	in MS Tunnel		Winter		7521	NA	1.0	1.0	0.75	1.0								1.0		1.0									1.0											U
			w/o Temp		7501	NA	1.0	1.0	0.75	1.0								1.0											1.0											U

Note *1: GDCS Pool Water Depth is 305mm (12in.).

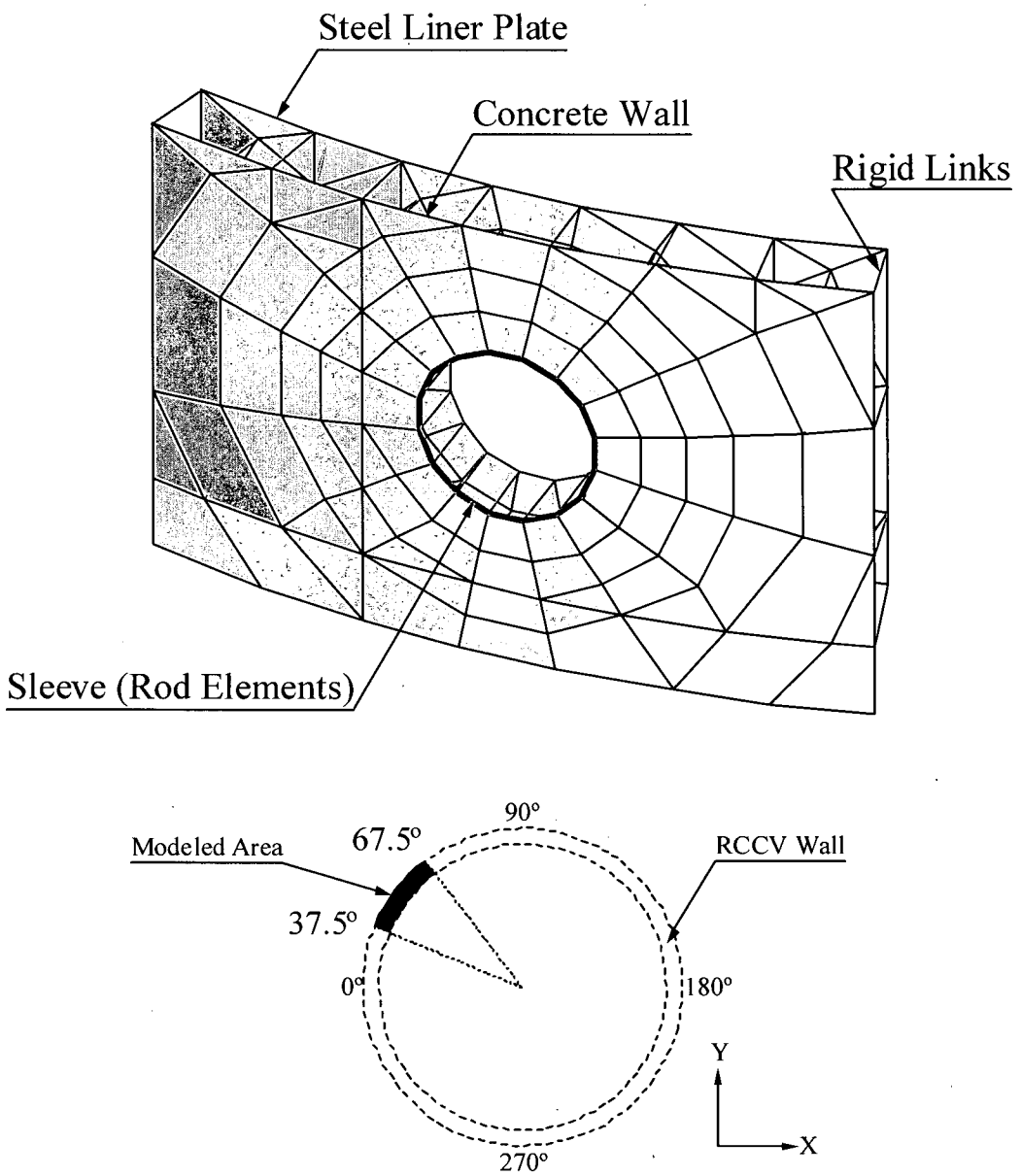

Figure 3.8-17(3) Details of Local FE Model of RCCV Wall Around UD Personnel Airlock Opening

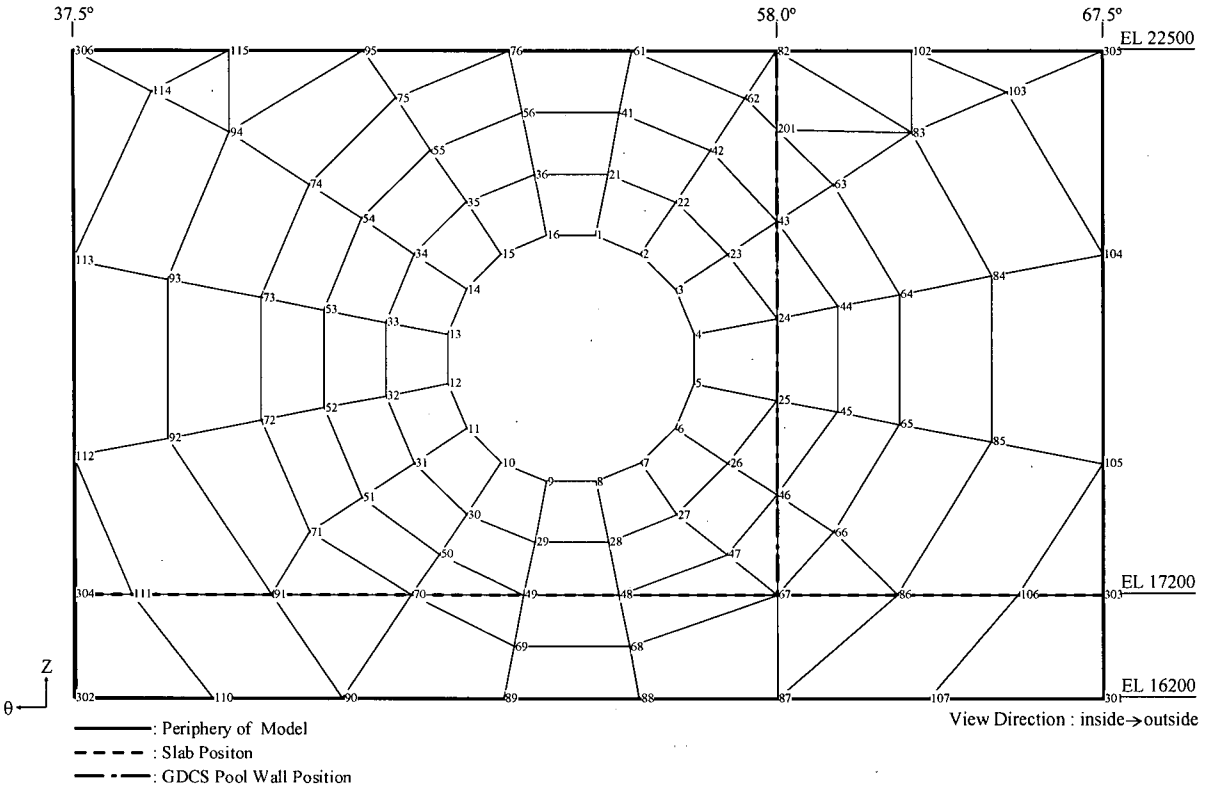

Figure 3.8-17(4) Boundary Conditions of FE Model

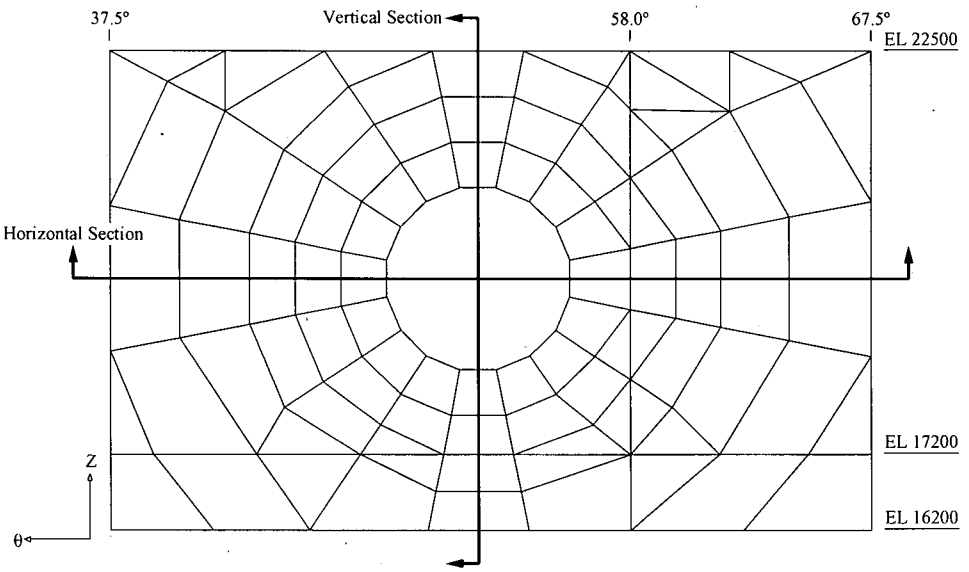

Figure 3.8-17(5) Sections Where Displacements Are Shown

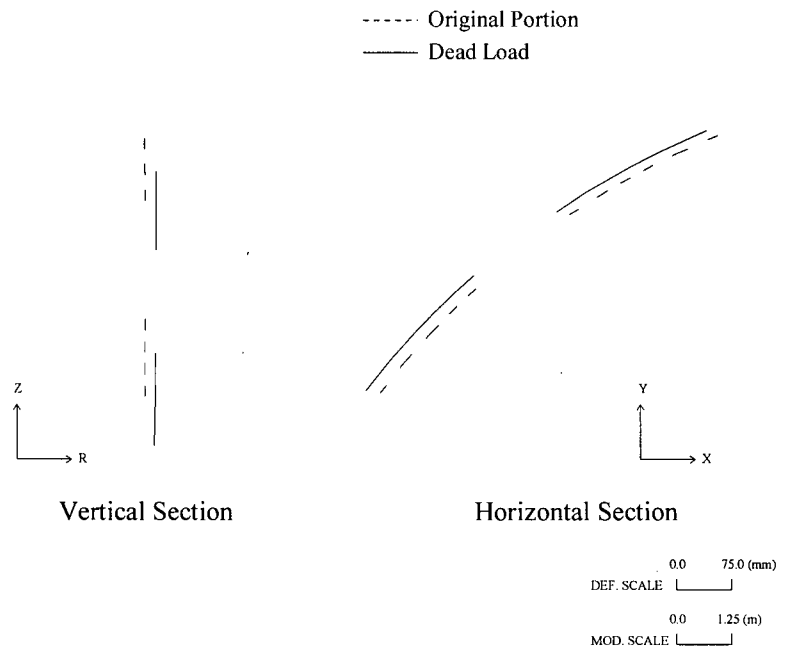

Figure 3.8-17(6) Section Displacement (Dead Load)

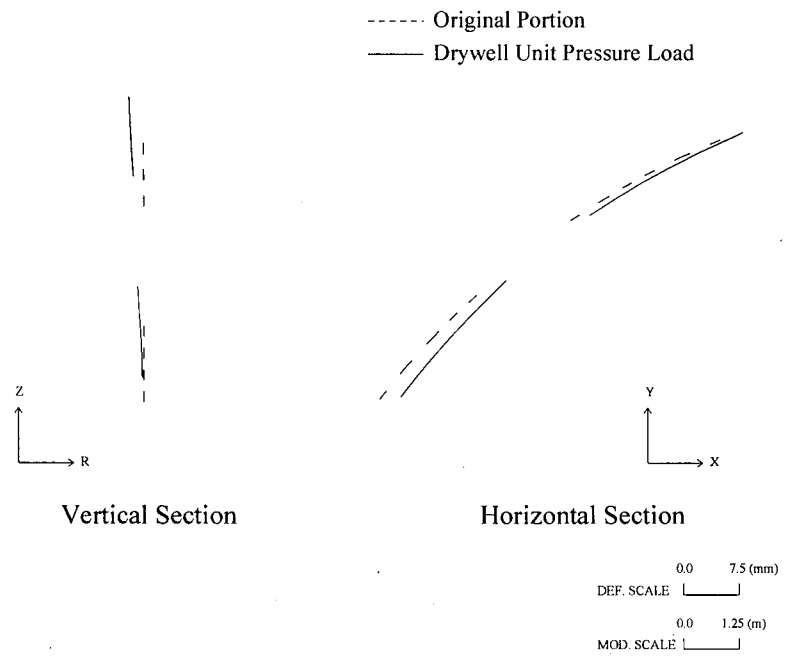

Figure 3.8-17(7) Section Displacement (Drywell Unit Pressure: 1MPa)

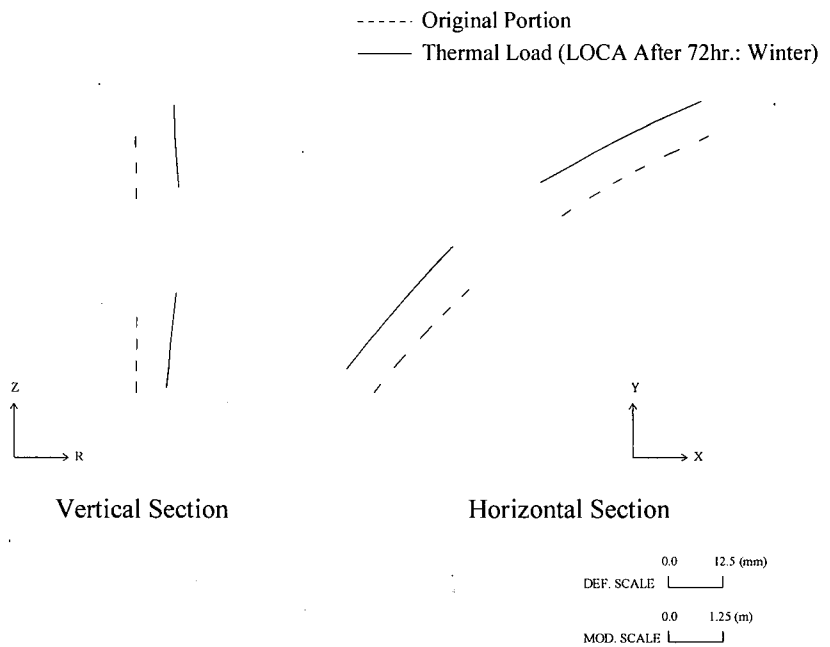

Figure 3.8-17(8) Section Displacement (Thermal Load: LOCA after 72hr. Winter)

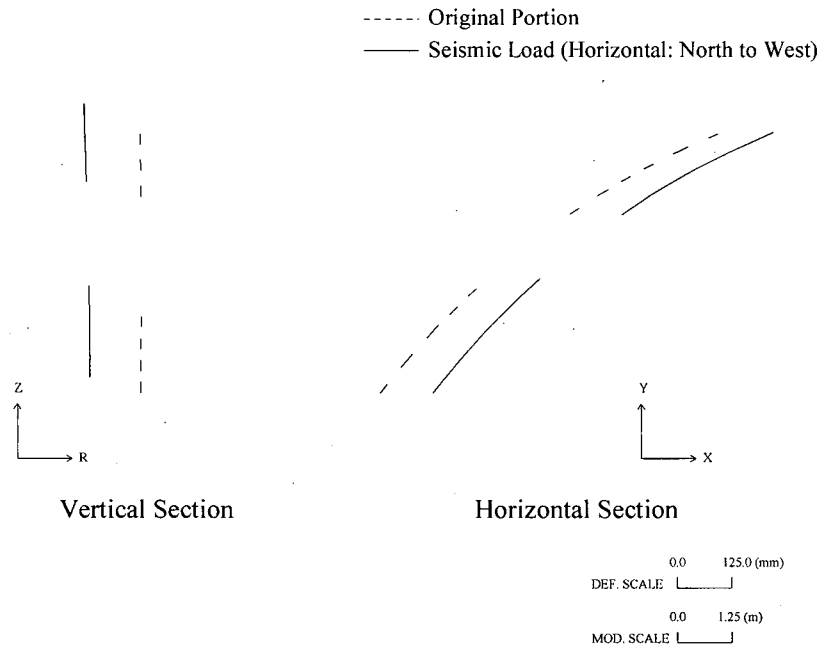

Figure 3.8-17(9) Section Displacement (Seismic Load: Horizontal North to South)

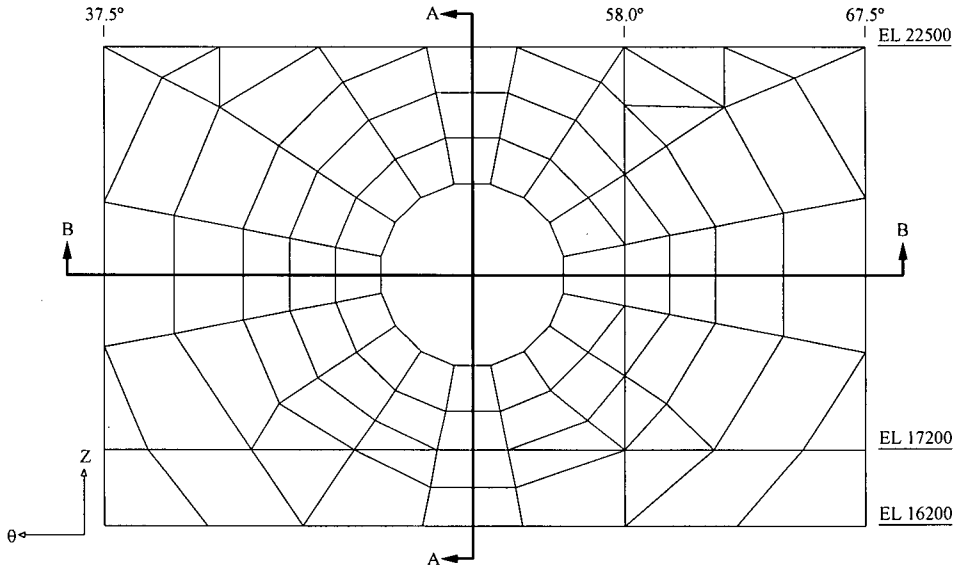

Figure 3.8-17(10) Sections Where Element Forces Are Shown

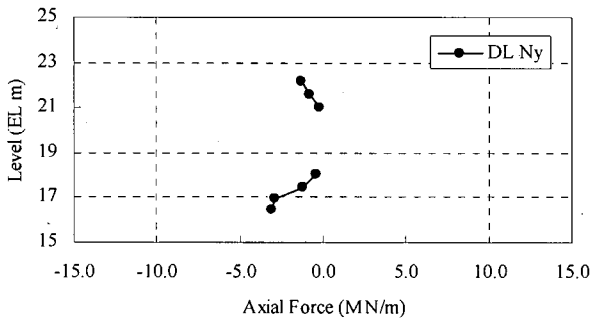

Section A-A Ny

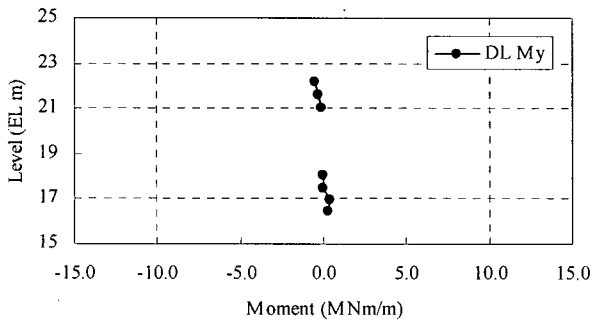

Section A-A My

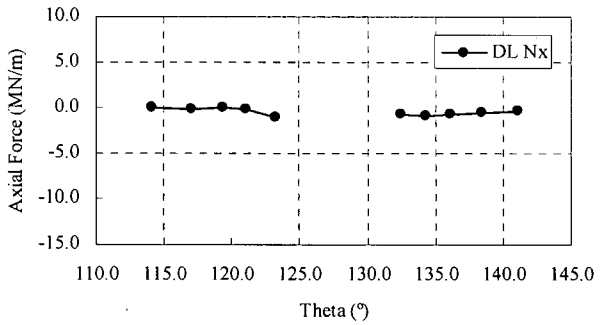

Section B-B Nx

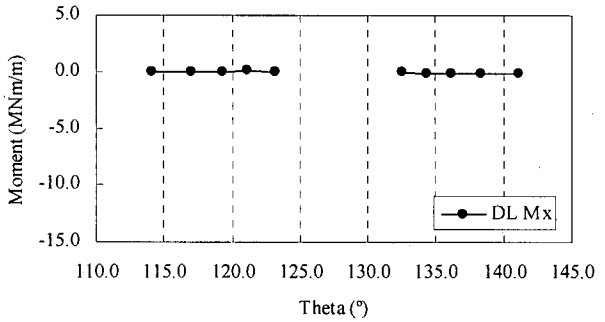

Section B-B My

Figure 3.8-17(11) Element Forces and Moments (Dead Load)

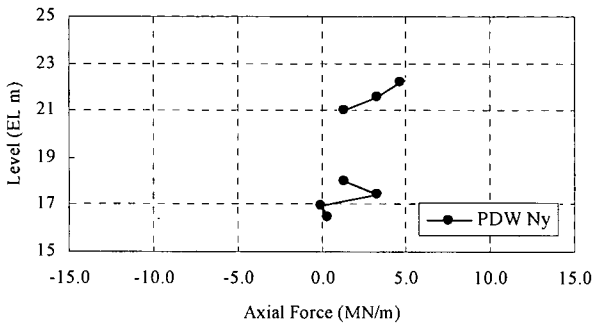

Section A-A Ny

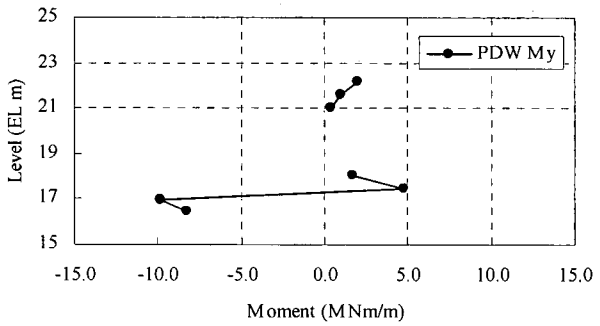

Section A-A My

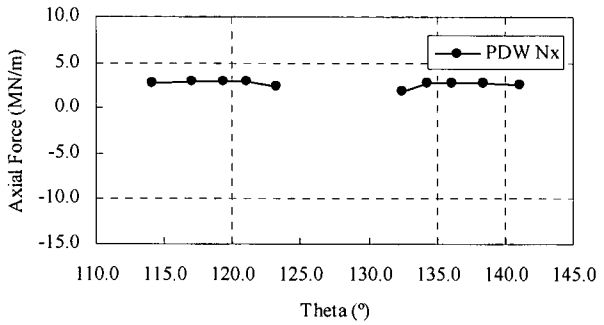

Section B-B Nx

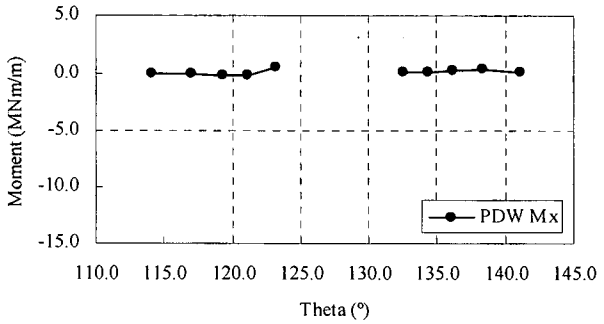

Section B-B My

Figure 3.8-17(12) Element Forces and Moments (Drywell Unit Pressure: 1MPa)

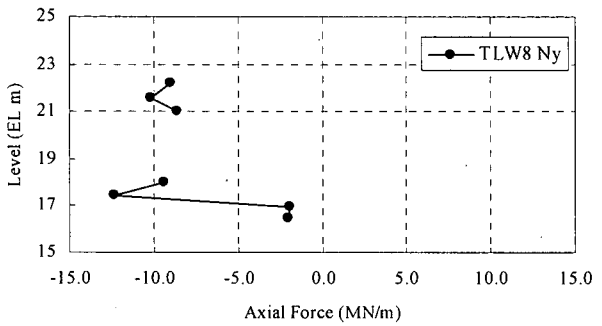

Section A-A Ny

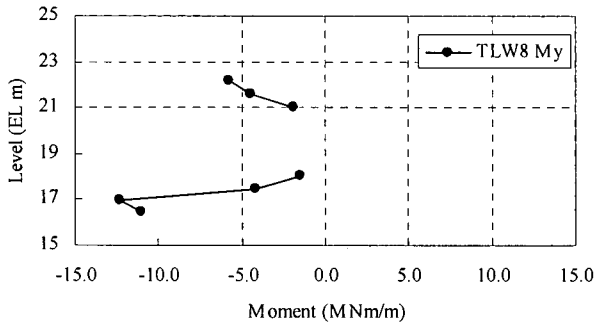

Section A-A My

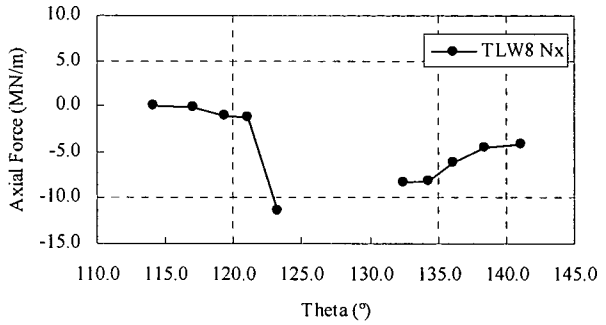

Section B-B Nx

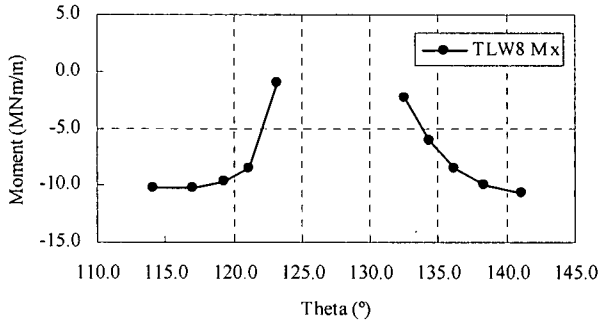

Section B-B My

Figure 3.8-17(13) Element Forces and Moments (Thermal Load: LOCA after 72hr. Winter)

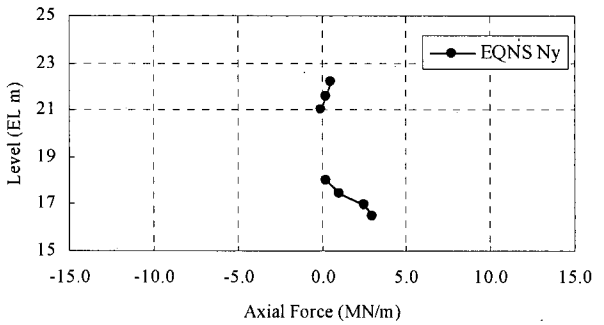

Section A-A Ny

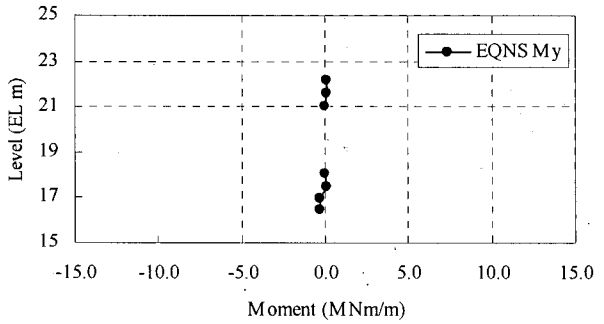

Section A-A My

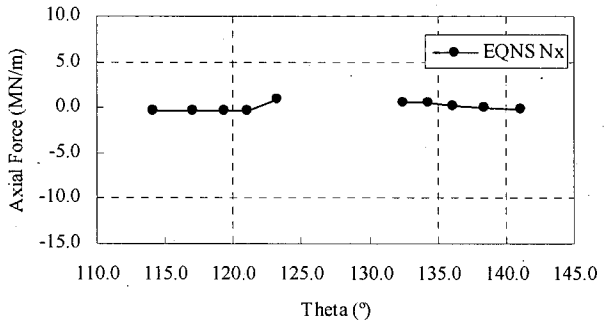

Section B-B Nx

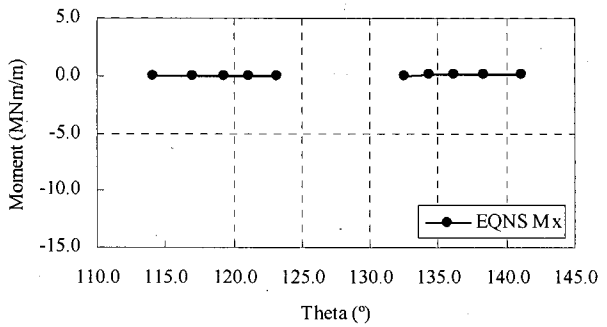

Section B-B My

Figure 3.8-17(14) Element Forces (Seismic Load: Horizontal North to South)

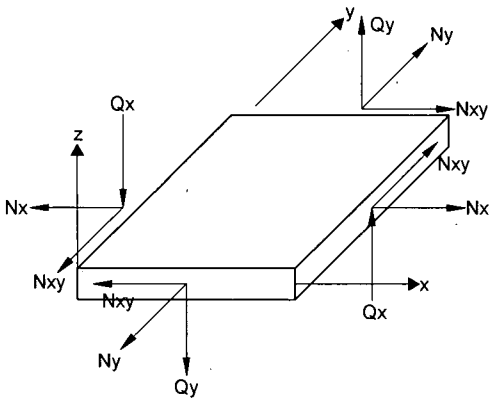

Membrane and Shear Forces

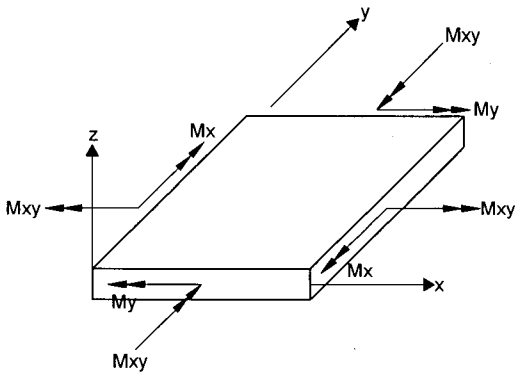

Moments

Definition of Element Coordinate System

x	y	z
horizontal	vertical	outward

Figure 3.8-17(15) Forces and Moments in Shell Element

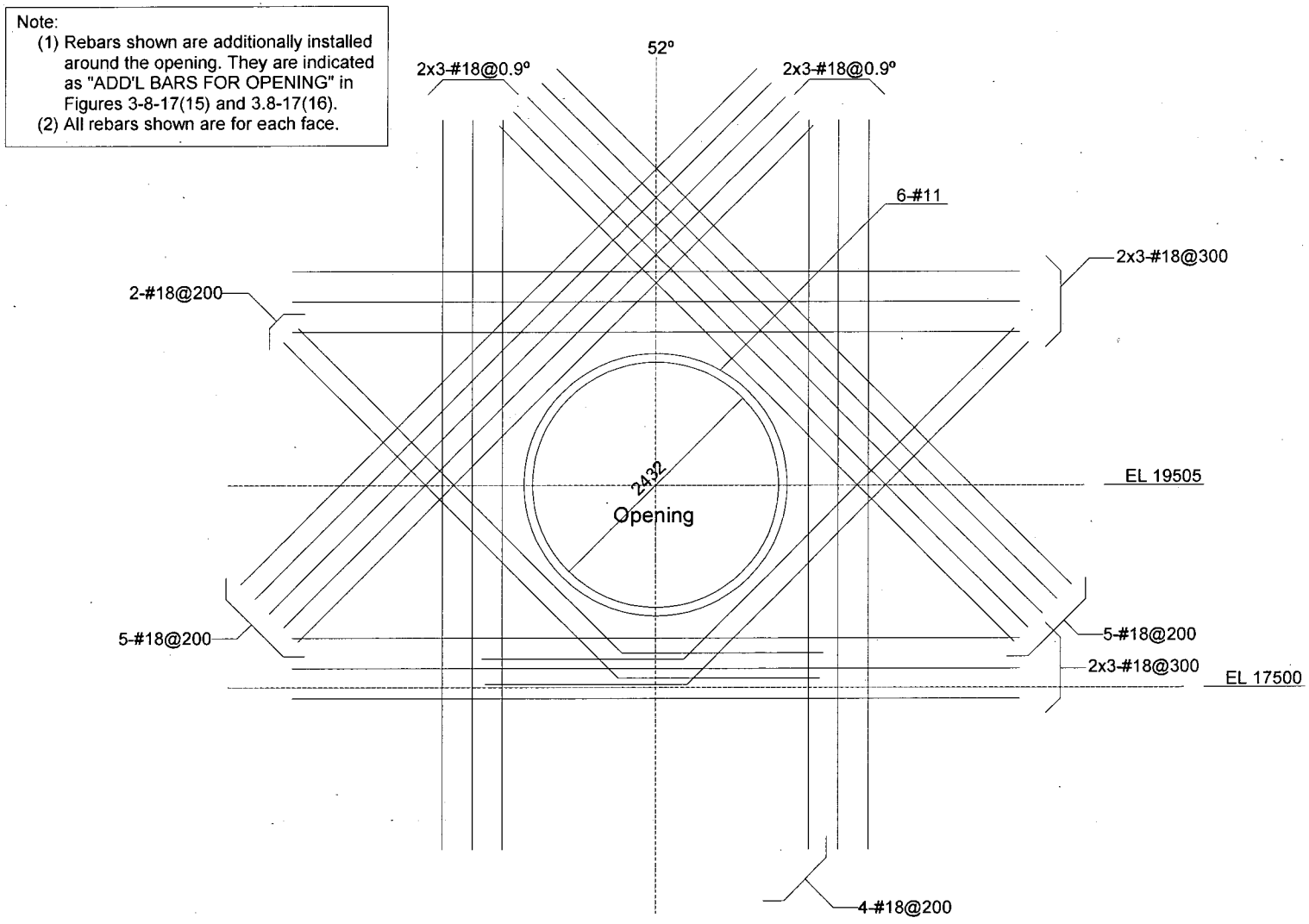

Figure 3.8-17(16) Additional Reinforcements in RCCV Wall around UD Personnel Airlock Opening

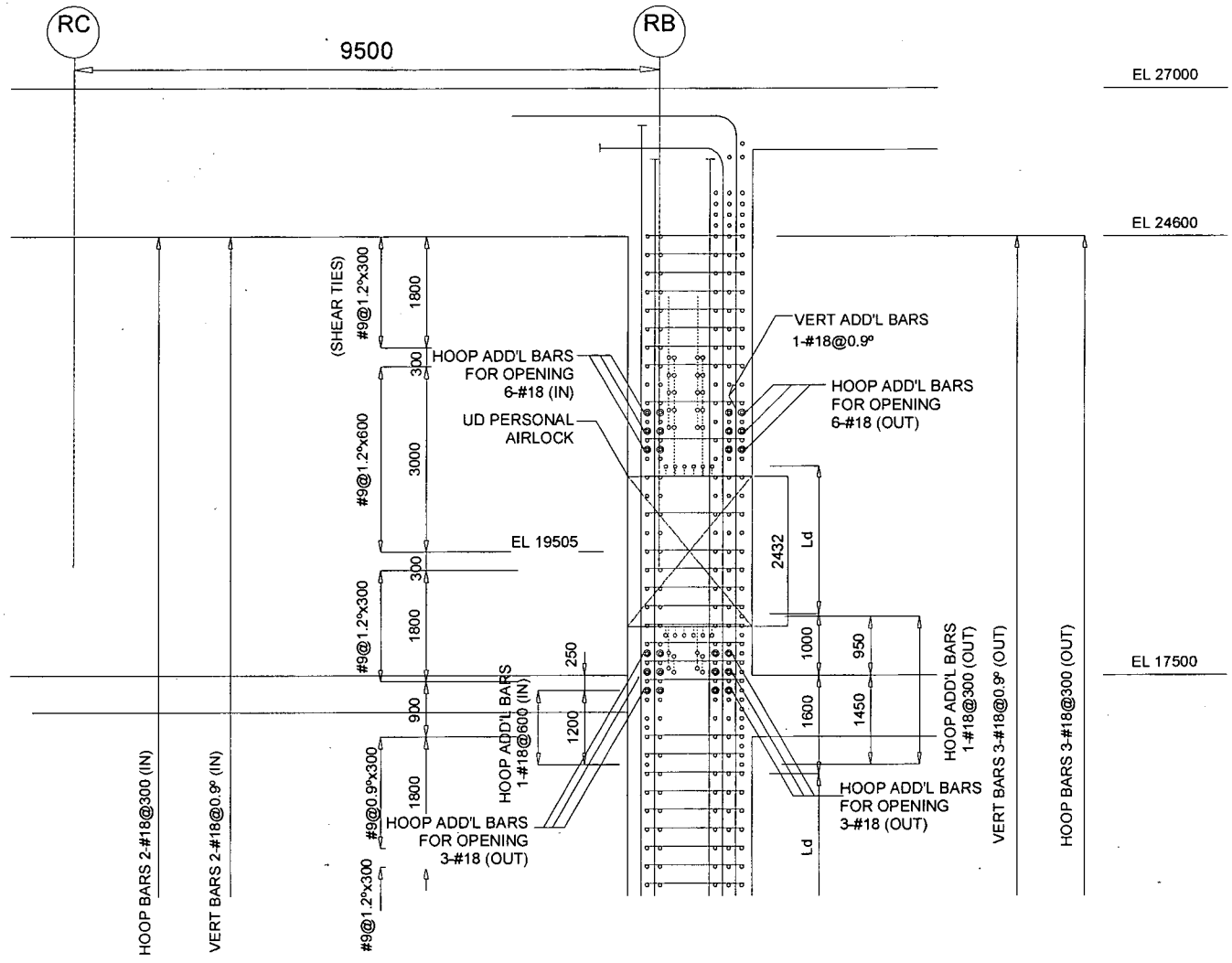

Figure 3.8-17(17) Rebar Arrangement around UD Personnel Airlock Opening (Section)

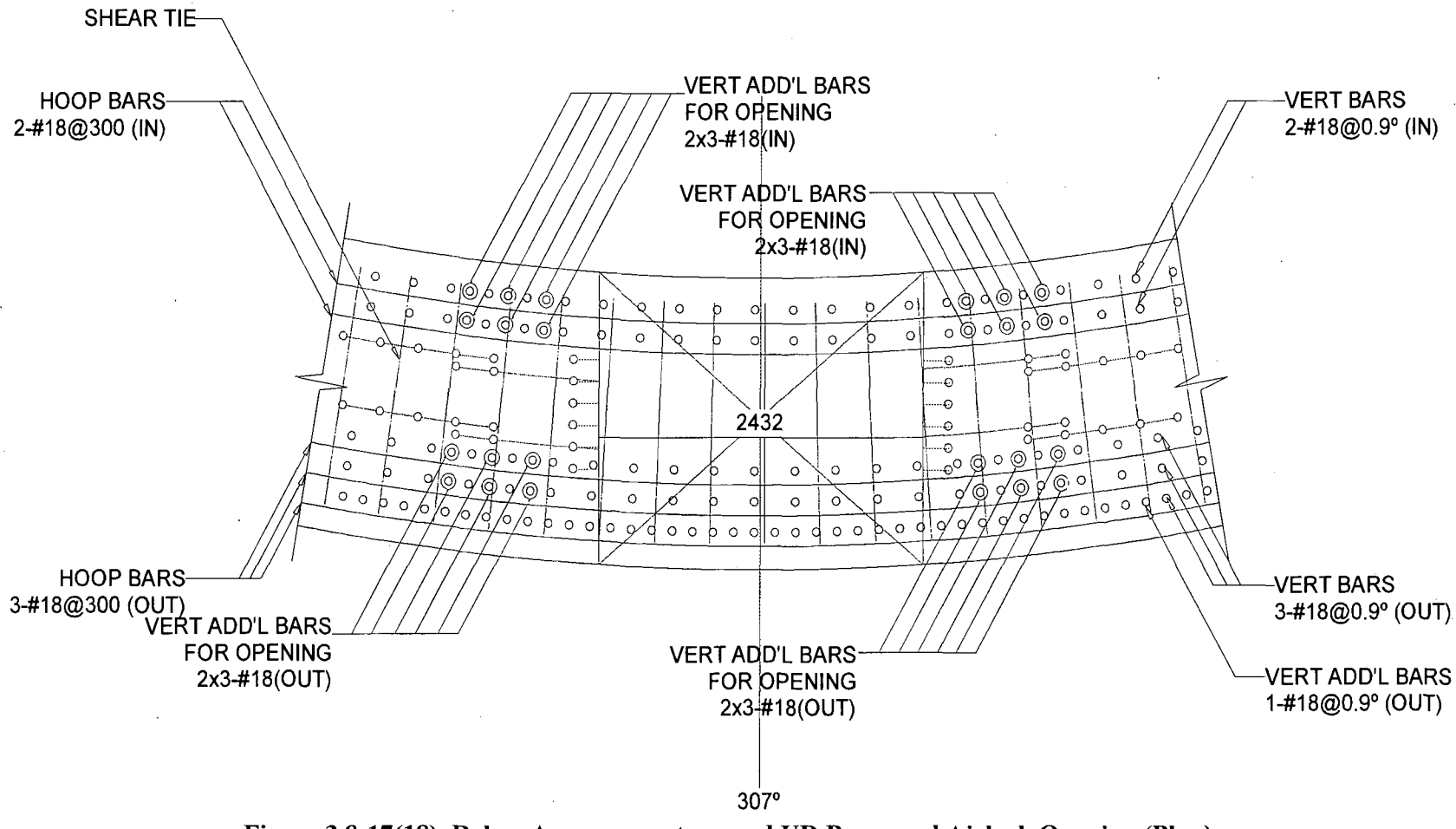

Figure 3.8-17(18) Rebar Arrangement around UD Personnel Airlock Opening (Plan)

NRC RAI 3.8-17, Supplement 2

Supplemental Request for Information on Responses to RAIs (E-mail from Chandu Patel Dated May 24, 2007)

(Comment on Response to NRC RAI 3.8-17, Supplement 1 Transmitted via MFN 06-407, Supplement 1 Dated February 1, 2007)

A review of the figures provided in GE's response, which present the element forces and moments in the local finite element model, show in some cases a sudden change in response. As an example, the plot of moment versus elevation in Section A A, presented in Figure 3.8 17(12), shows sudden changes in magnitude from approximately -8 to -10 and then +5 MNm/m over a change in elevation from about 16.5 to 17 and then 17.5 m. GE needs to explain this sudden change in element forces and whether this indicates that there may not be sufficient discretization (refinement) in the finite element model. In addition, as requested in the original RAI, a description summarizing the analysis, a figure showing the local finite element model, and figure(s) showing the reinforcement details provided in the GE response for this representative containment penetration should be included in the DCD.

GEH Response

In the analysis model shown in Figure 3.8-17(4) of the GEH response to NRC RAI 3.8-17 S01 (MFN 06-407, Supplement 1) the nodes at EL 17200 are located on the boundary of the Drywell and Wetwell. Therefore, loading conditions of the regions above and below the boundary are different. In addition, the nodes at EL 17200 are constrained by the surrounding floor slab and the Diaphragm Floor slab in the RBFB global FE model. In order to reproduce the constraints, enforced displacements obtained from the global model analyses are applied to the nodes in the detailed model analyses as described in the NRC RAI 3.8-17, Supplement 1 response above. Sudden changes in element moment M_y shown in Figure 3.8-17(12) of the GEH response to NRC RAI 3.8-17 S01 (MFN 06-407, Supplement 1) are the result of discontinuities in loadings and constraints by surrounding structures. The element widths in the regions of interest are around 600 mm, and the size is sufficiently small compared with the RCCV wall thickness of 2000 mm.

It should be pointed out that the calculations described in the NRC RAI 3.8-17, Supplement 1 are based on the seismic loads developed in DCD Tier 2 Revision 2. GEH has updated the local penetration reinforcement details with the seismic loads considered in the latest global FE analysis.

A description summarizing the penetration analysis method will be added to DCD Tier 2 Subsection 3G.1.4.1. DCD Tier 2 Figures 3G.1-66 through 3G.1-70 also will be added to DCD Tier 2 Appendix 3G to show the local finite element model and the reinforcement details for the representative containment penetration.

DCD Impact

DCD Tier 2 Subsections 3G.1.4.1 and 3G.1.5.4 will be revised in ESBWR DCD Tier 2, Revision 5 as noted in the attached markups. DCD Tier 2 Figures 3G.1-66 through 3G.1-70 will be added in ESBWR DCD Tier 2, Revision 5 as noted in the attached markups.

3G.1.3.1.3 Reactor Building Structure/Containment Structure Connections

The RCCV and the RB structure are integrated by the Isolation Condenser/Passive Containment Cooling ~~System~~ (IC/PCC~~S~~) pool girders at the top of the containment and by floor slabs at elevations that are defined as part of the RB structure and the basemat. The IC/PCC~~S~~ pool girders are deep reinforced concrete girders, and they are integrated with the containment top slab and with RB walls.

3G.1.3.1.4 Containment Internal Structures

The containment internal structures consist of the diaphragm floor slab, vent wall, GDCS pool walls, reactor shield wall, and the RPV support bracket. These structures are shown in the general arrangement drawings in this appendix.

The diaphragm floor slab acts as a barrier between the drywell and the wetwell. The diaphragm floor slab is supported on the reinforced concrete containment wall at its outer periphery and on the vent wall at its inner periphery. The diaphragm floor slab is a concrete-filled steel structure. The space between the floor slab top and bottom plates is filled with concrete. The slab is supported by a system of radial beams spaced evenly all around and spanning between the vent wall structure and the reinforced concrete containment wall.

The vent wall structure is also a concrete–filled steel design consisting of two concentric carbon steel cylinders connected together by vertical web plates evenly spaced all around. The vent wall structure is anchored at the bottom into the RPV pedestal and is restrained at the top by the diaphragm floor slab. The cylindrical annulus carries 12 vent pipes and 12 safety relief valve downcomer pipes with sleeves, from the drywell into the suppression pool. The space in the cylindrical annulus is filled with concrete.

There are three GDCS pools supported on top of the diaphragm floor slab. The pools on one side are contained by the reinforced concrete containment wall and on the other side by structural steel walls.

The reactor shield wall is a thick steel cylindrical structure that surrounds the RPV. It is supported by the RPV support brackets and the reactor pedestal. The function of the reactor shield wall is to attenuate radiation emanating from the RPV. In addition, the reactor shield wall provides structural support for the RPV stabilizer, the RPV insulation and miscellaneous equipment, piping and commodities. Openings are provided in the reactor shield wall to permit the routing of necessary piping to the RPV and to permit inservice inspection of the RPV and piping.

3G.1.4 Analytical Models

3G.1.4.1 Structural Models

The RB and the RCCV including its internal structures are analyzed as one integrated structure utilizing the finite element computer program NASTRAN. The finite element model consists of quadrilateral, triangular, and beam elements. The quadrilateral and triangular elements are used to represent the slabs and walls. Beam elements are used to represent columns and beams. The model is shown in Figures 3G.1-8 to 3G.1-18.

As shown in Figure 3G.1-8, the FB is also included in the model, because the FB is integrated with the RB. The model includes the whole (360°) portion of the RB including the RCCV and FB taking the application of nonaxisymmetrical loads and the asymmetric layout of the FB structure into consideration.

Liner plates of various thicknesses as shown in Figure 3G.1-48 are included in the model at locations of the pressure boundary of the containment. The liner plate nodal points are connected to the containment nodal points by rigid beams. The liner plate elements are shown in Figure 3G.1-18. Pressure loads in the containment are applied on the liner plate.

The vent wall and the diaphragm floor are concrete-filled structures consisting of steel plates and concrete. The infill concrete is neglected in analysis model conservatively. Steel plates including connecting rib plates and girders are modeled by shell elements. The GDCS pool, the reactor shield wall and the RPV support brackets are also included in the analysis model. These structures are modeled by shell elements, except the GDCS pool beams which are modeled by beam elements. The analysis model of these structures is shown in Figure 3G.1-17. For the GDCS pool, the detail stress evaluation is performed using a local model.

The following major penetrations in the concrete containment are included in the model in order to take local reduction of the wall stiffness into consideration. The penetrations in the model are shown in Figures 3G.1-10 and 3G.1-11.

- upper drywell equipment and personnel hatches
- lower drywell equipment and personnel hatches
- wetwell access hatch
- main steam and feedwater pipe penetrations

Small penetrations in the containment are not modeled because their effects on the wall stiffness are negligible.

The containment around an opening is analyzed utilizing a local FE model. Figure 3G.1-66 shows the detail of the local FE model of the RCCV wall around the upper drywell Personnel Airlock Opening. The model is composed of the concrete wall, the steel liner plate and the steel opening sleeve. The concrete wall and steel liner plate are modeled by shell elements, and the opening sleeve is modeled by rod elements. Because the analysis model is a local FE model of the RCCV, the enforced displacements calculated from the RBFB global FE model analysis results are applied at the periphery of the model and at the connections with the surrounding slab and wall.

The nodal points are defined by a right hand Cartesian coordinate system X, Y, Z. This system, called the global coordinate system, has its origin located at the center of the containment at the bottom of the RPV, i.e., EL 0. The positive X axis is parallel with the IC/PCC~~S~~ pool girder in the 180° direction of the containment; the Y axis is perpendicular to the IC/PCC~~S~~ pool girder in the 90° direction of the containment; the Z axis is vertical upward. This coordinate system is shown in Figure 3G.1-8.

H = Lateral soil pressure, E' = Safe Shutdown Earthquake

3G.1.5.4 Structural Design Evaluation

The evaluation of the containment structure, the containment internal structures, and the RB structures is based on the results from the load combinations indicated in Subsection 3G.1.5.2.2.

Figure 3G.1-28 shows the location of the sections that are selected for evaluation of reinforced concrete structures. They are selected, in principle, from the center and both ends of walls and slabs, where it is reasonably expected that the critical stresses appear based on engineering experience and judgment. The computer program SSDP-2D is used for the evaluation of stresses in rebar and concrete. The input to SSDP-2D consists of rebar ratios, material properties, and element geometry at the section under consideration together with the forces and moments from the NASTRAN analysis, which are shown in Tables 3G.1-13 through 3G.1-21. Element forces and moments listed in the tables are defined with relation to the element coordinate system shown in Figure 3G.1-29. Figures 3G.1-30 through 3G.1-38 indicate deformations of structures obtained by NASTRAN analyses for the loads corresponding to Table 3G.1-13 through 3G.1-21.

Figure 3G.1-39 shows a flow chart for the structural analysis and design. Figures 3G.1-40 through 3G.1-47 and Figures 3G.1-67 through 3G.1-70 present the design drawings used for the evaluation of the containment and the Reactor Building structural design. Figures 3G.1-48 through 3G.1-50 show the design details of containment liner plate. Figures 3G.1-51 through 3G.1-54 show the design details of containment major penetrations. Figures 3G.1-55 through 3G.1-59 show the details of containment internal structures. Figures 3G.1-71a and 3G.1-71b show the details of the PCCS condenser and supports.

3G.1.5.4.1 Containment Structure

Tables 3G.1-22 through 3G.1-26 show the resultant combined forces and moments in accordance with the selected load combinations listed in Table 3G.1-10. Table 3G.1-27 lists the sectional thicknesses and rebar ratios used in the evaluation. At each section, in general, three elements are analyzed at azimuth 0°, 90° and 135°.

Tables 3G.1-28 through 3G.1-32 show the rebar and concrete stresses at these sections for the representative elements. Tables 3G.1-33 and 3G.1-34 summarize evaluation results for transverse shear and tangential shear in accordance with ASME Section III, Division 2, Article CC-3520.

Table 3G.1-35 shows the maximum strains of containment liner plate. Table 3G.1-36 shows the stress summary of drywell head.

Table 3G.1-60 shows the stress summary of PCCS condenser and support.

3G.1.5.4.1.1 Containment Wall Including RPV Pedestal

Sections 1 through 9 shown in Figure 3G.1-28 are considered critical sections for the containment wall including the RPV pedestal. Maximum stress in the meridional rebar is found to be ~~287.5~~320.0 MPa (~~41.70~~46.41 ksi) at Section 1~~4~~ near the bottom of the ~~RCCV Wetwell~~RPV Pedestal due to load combination CV-11a, as shown in Table 3G.1-31. The maximum stress in the circumferential rebar is found to be ~~343.6~~326.0 MPa (~~49.83~~47.28 ksi), which occurs also at Section 6~~4~~, the ~~bottom~~top of the RCCV Wetwell due to load combination CV-11a, as shown in

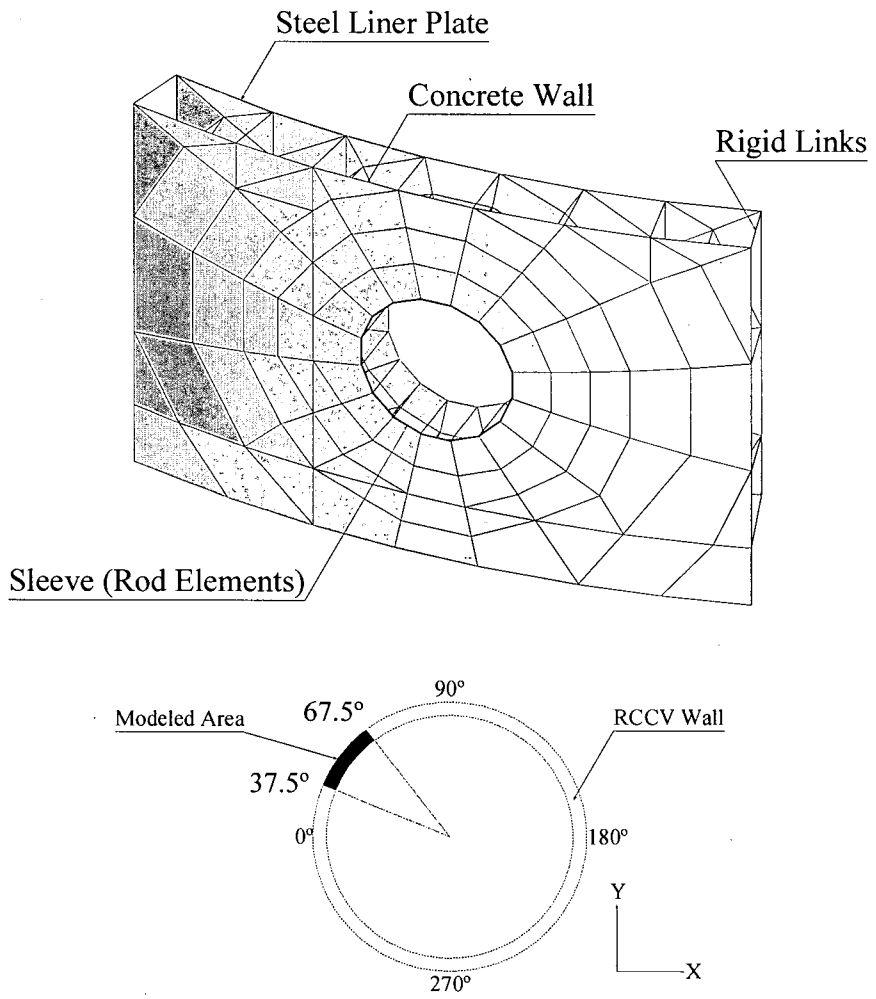

Figure 3G.1-66. Detail Local FE Model of RCCV Wall Around Upper Drywell Personnel Airlock Opening

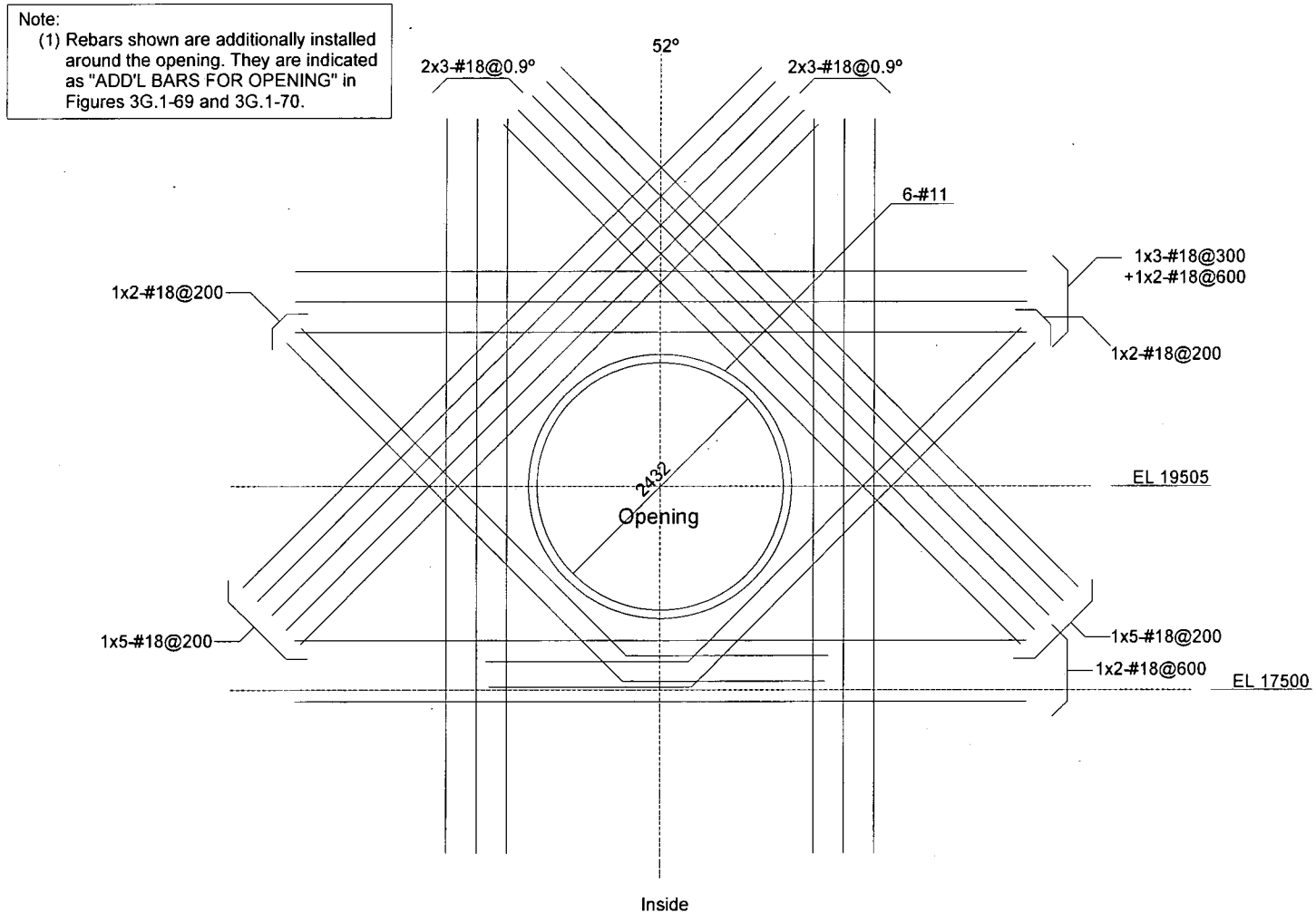

Figure 3G.1-67. Additional Reinforcements in RCCV Wall Around Upper Drywell Personnel Airlock Opening (Inside Face)

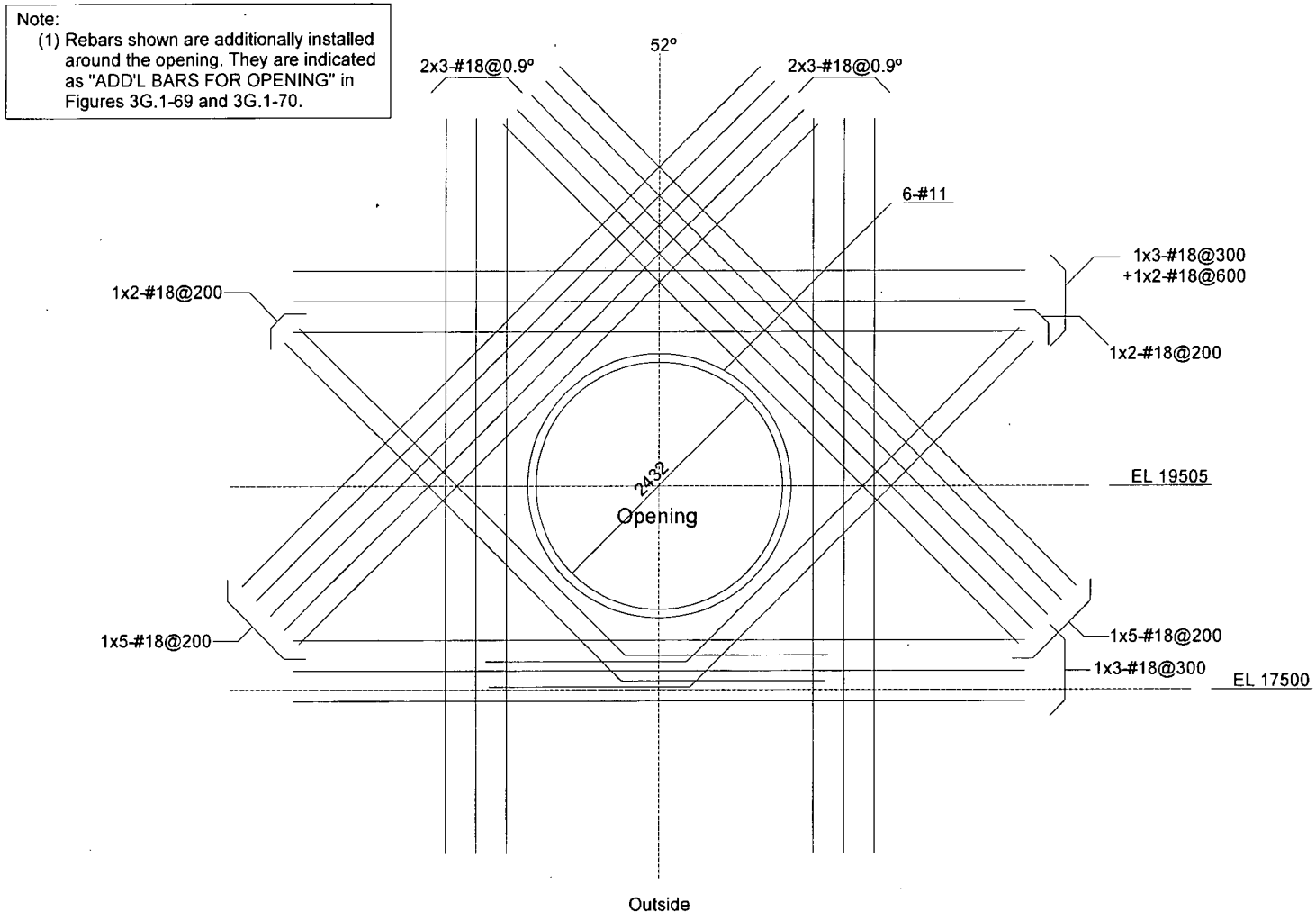

Figure 3G.1-68. Additional Reinforcements in RCCV Wall Around Upper Drywell Personnel Airlock Opening (Outside Face)

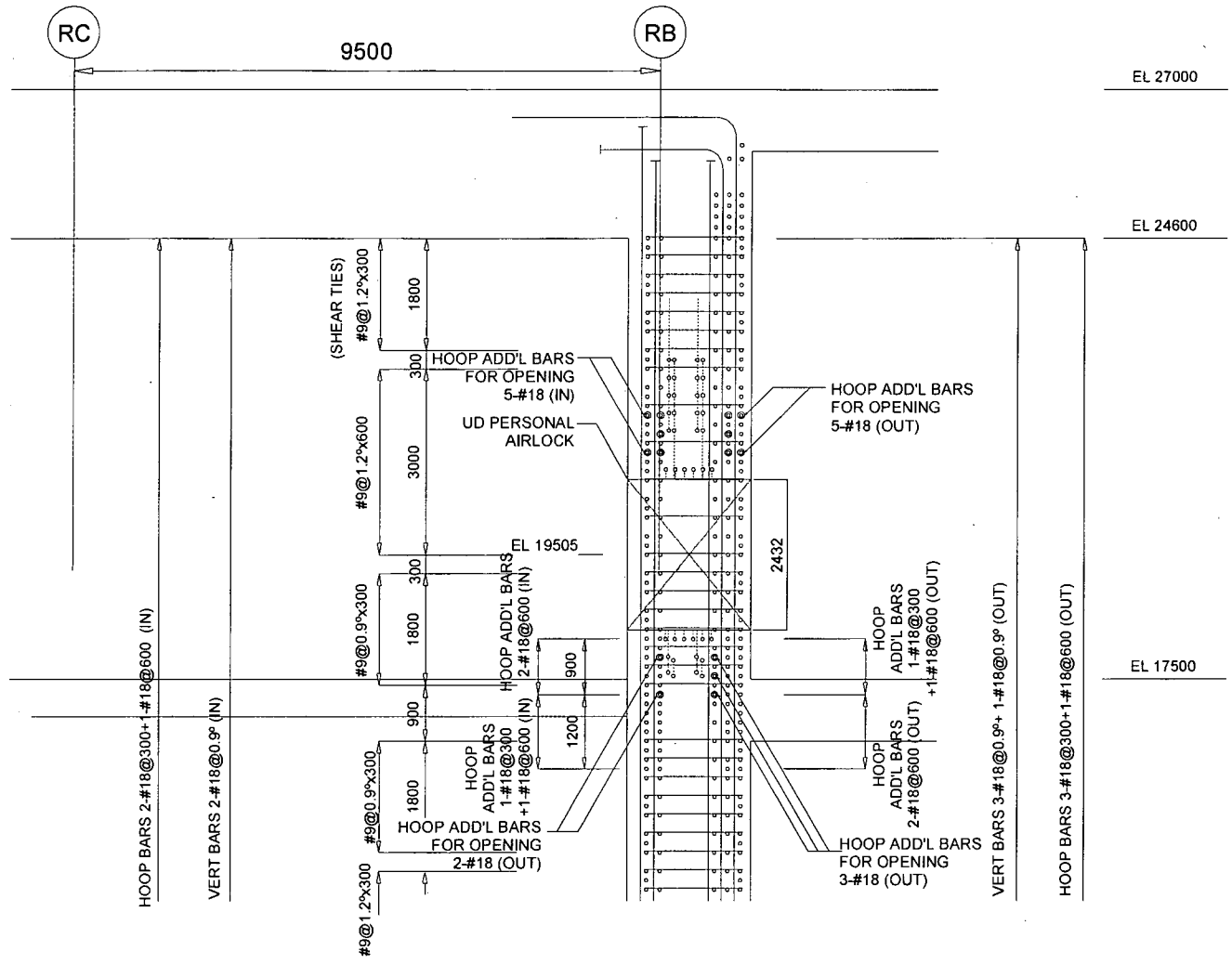

Figure 3G.1-69. Reinforcements in RCCV Wall Around Upper Drywell Personnel Airlock Opening (Section)

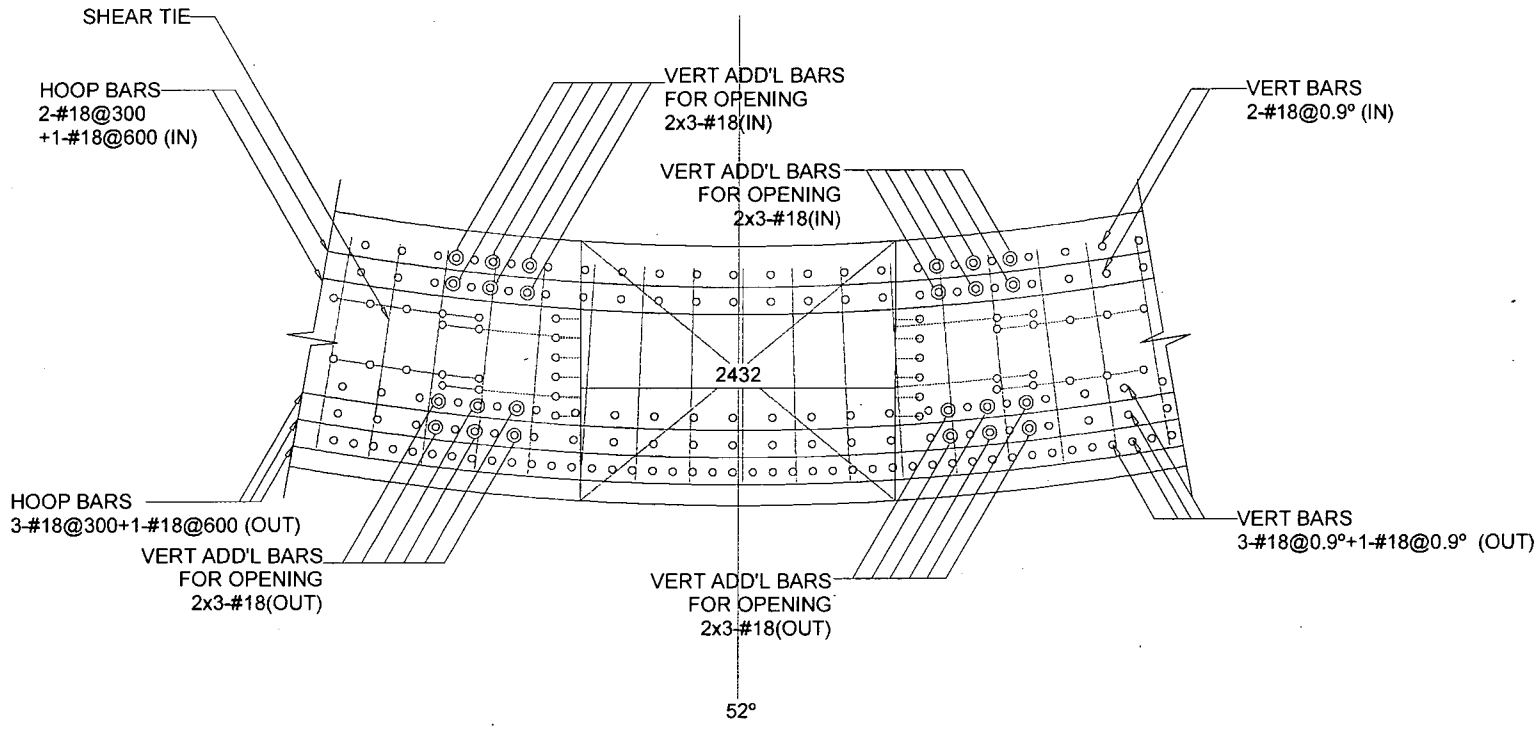

Figure 3G.1-70. Reinforcements in RCCV Wall Around Upper Drywell Personnel Airlock Opening (Plan)