ENCLOSURE 3

PRELIMINARY STRESS CALCULATION 2007-16760

ISSUE SUMMARY
Form SOP-0402-07, Revision 7B

DESIGN CONTROL SUMMARY			
CLIENT:	AmerenUE	UNIT NO.: 1	Page No.: 1
PROJECT NAME:	Callaway Nuclear Plant		
PROJECT NO.:	11504-021	☒ NUCLEAR SAFETY- RELATED	
CALC. NO.:	2007-16760	☐ NOT NUCLEAR SAFETY-RELATED	
TITLE:	Analysis of Buried HDPE ESW Piping		
EQUIPMENT NO.:	None		

IDENTIFICATION OF PAGES ADDED/REVISED/SUPERSEDED/VOIDED & REVIEW METHOD

Original Issue

INPUTS/ ASSUMPTIONS
☐ VERIFIED
☒ UNVERIFIED

REVIEW METHOD:	Detailed Review	REV.	0
STATUS:		DATE FOR REV.:	
PREPARER	C. Medrano Charles Medrano	DATE:	12/21/2007
PREPARER	T. Musto (Section 8.4) Bonnie McMusto	DATE:	12/21/2007
REVIEWER	A. C. Eberhardt A. C. Eberhardt	DATE:	12/21/2007
APPROVER	J. Mc Lean	DATE:	12/21/2007

IDENTIFICATION OF PAGES ADDED/REVISED/SUPERSEDED/VOIDED & REVIEW METHOD

INPUTS/ ASSUMPTIONS
☐ VERIFIED
☐ UNVERIFIED

REVIEW METHOD:		REV.	
STATUS:		DATE FOR REV.:	
PREPARER		DATE:	
REVIEWER		DATE:	
APPROVER		DATE:	

IDENTIFICATION OF PAGES ADDED/REVISED/SUPERSEDED/VOIDED & REVIEW METHOD

INPUTS/ ASSUMPTIONS
☐ VERIFIED
☐ UNVERIFIED

REVIEW METHOD:		REV.	
STATUS:		DATE FOR REV.:	
PREPARER		DATE:	
REVIEWER		DATE:	
APPROVER		DATE:	

NOTE: PRINT AND SIGN IN THE SIGNATURE AREAS

2.0 - Table of Contents

Description Page

1.0 - Title Page....1

2.0 - Table of Contents....2

3.0 - Purpose & Scope....3

4.0 - Design Inputs....4-7

5.0 - Assumptions, Limitations, & Engineering Judgment.... 8

6.0 - Methodology & Acceptance Criteria....9-21

7.0 - Calculations....22-140

- 7.1 - Pressure Design of HDPE Pipe....23-31
- 7.2 - Pressure Design of Joints & Fittings.... 32
- 7.3 - Soil & Surcharge Analysis....33-43
- 7.4 - Flotation Analysis....44-45
- 7.5 - Longitudinal Stress Analysis.... 46-52
- 7.6 - Thermal Analysis....53-58
- 7.7 - Seismic Analysis....59-74
- 7.8 - Pipe Systems Finite Element Analyses....75-140

8.0 - Results, Conclusion, Limitations, & Impact Assessment.... 141-147

9.0 - References....148-150

10.0 - Attachments....151

- 10.1 - ENDOT Industries, Inc. - Piping and Tubing....1
- 10.2 - Correspondence No. NEMM 07-0034, "Design Input Transmittal of IST Valve Stroke Data for the Callaway ESW System ," Dated 11/02/07.... 1-11
- 10.3 - Correspondence No. NEMM 07-0038, "Design Inputs for Development of MP 07-0066, ESW Buried Piping Replacement," Dated 11/30/07....1-2
- 10.4 - Train B - Return Line Thermal Stress Analysis SAP2000 Input/Output..... 1-24
- 10.5 - Train B - Return Line Seismic Stress Analysis SAP2000 Input/Output..... 1-19
- 10.6 - Train B - Backwash Line Thermal Stress Analysis SAP2000 Input/Output..1-37
- 10.7 - Train B - Backwash Line Seismic Stress Analysis SAP2000 Input/Output...1-37
- 10.8 - ASME Code Case N-755....1-77

3.0 - Purpose & Scope

The Callaway Nuclear Plant ESW System currently has underground carbon steel piping that runs from the ESW Pumphouse located on the Ultimate Heat Sink (UHS) Retention Pond to the Control Building, from the Control Building to the UHS Cooling Tower and from the UHS Cooling Tower back to the UHS Retention Pond. Due to erosion/corrosion issues, the Callaway Nuclear Plant would like to replace the existing underground carbon steel piping with a new High Density Polyethylene (HDPE) ESW piping system. To date, HDPE piping has not been used within the industry in safety-related applications. ASME Code Case N-755 pertaining to the use of HDPE piping in ASME Section III, Division 1, Class 3 buried piping systems has been approved. However, regulatory approval for the use of HDPE piping in this application is required.

3.1 - Purpose

The purpose of this calculation is to analyze and design the HDPE portion of the ESW System, which is almost entirely buried.

3.2 - Scope

The scope of work for this calculation is the analysis of the new ESW buried HDPE piping in accordance with ASME Code Case N-755.

The specific buried piping lines to be replaced are the following:

- Train "A" (replaced by EF-003-AZC-36) and Train "B" (replaced by EF-007-AZC-36) 30" nominal diameter intake (supply) lines from the ESW Pumphouse to the Control Building.
- Train "A" (replaced by EF-083-AZC-36) and Train "B" (replaced by EF-140-AZC-36) 30" nominal diameter discharge (return) lines from the Control Building to the UHS Cooling Tower.
- Train "A" (replaced by EF-002-AZC-4) and Train "B" (replaced by EF-006-AZC-4) 4" nominal diameter ESW strainer backwash discharge (return) lines to the 36" Gravity Drain Lines.

4.0 - Design Inputs

4.1 - Buried ESW Piping Layout

The buried ESW piping layout is included in Ref. 9.33.

4.2 - Service Life

4.2.1 - Normal Service Life

The buried ESW piping shall be designed for a service life of 40 years under normal system operating conditions, per Ref. 9.17.

4.2.2 - Post-Accident Service Life

The buried ESW piping shall be designed for a service life of 30 days at peak post-accident system operating conditions, per Ref. 9.17. This service life corresponds to the post-accident system operating duration credited by the plant accident analysis as identified by Chapter 9.2.5.2 of the Callaway Plant FSAR. The design shall consider that the peak post-accident conditions occur continuously for the entire 30 day period and that the accident occurs at the end of the 40 year normal service life. The impact of this consideration on the allowable stress values is evaluated using the methodology outlined in ISO 13760 in Ref. 9.25.

4.3 - Design & Service Loads

4.3.1 - Design Pressures

The supply line design pressure for Service Levels A is 165 psig, per Ref. 9.43.

The supply line design pressure for Service Levels B is 190 psig, per Ref. 9.43.

The return line pressures for Service Levels A & B are 45 psig, per Ref. 9.43.

The backwash line design pressure for Service Levels A is 160 psig, per Ref. 9.43.

The backwash line design pressure for Service Levels B is 180 psig, per Ref. 9.43.

4.3.2 - Design Temperatures

Fluid Temperatures

The maximum supply line temperature is 95 degrees Fahrenheit, per Ref. 9.43.

The maximum return line temperature is 175 degrees Fahrenheit, per Ref. 9.43.

The maximum backwash line temperature is 95 degrees Fahrenheit, per Ref. 9.43.

The minimum fluid temperature is 32 degrees Fahrenheit (freezing point of water).

Ground Temperatures

The maximum ground temperature is 70 degrees Fahrenheit, per Ref. 9.8 (Sht. 31).

As the pipe is buried below the frost line, the minimum ground temperature at the location of the buried pipe is 32 degrees Fahrenheit (freezing point of water).

4.3.3 - Soil Loads

The unit weight of soil is 150 lbf/ft^3, per pg. 2.5-159 of Ref. 9.42.

4.3.4 - Live Load

The live load considered for all buried piping is HS-20 loading, which equates to 400 psf for a minimum of 4 ft. of cover (frost depth, per Section 4.3 of Ref. 9.11), per Table 3-1 of Ref. 9.12.

No heavy transporter or Cooper E-80 live load is considered. Any future transport of heavy loads (ie: greater than 400 psf) over the buried pipe, must be evaluated.

4.3.5 - Seismic Loads

Seismic Anchor Motion (SAM) Effects

Seismic anchor movements are determined from the maximum differential displacement of the buildings that form the boundaries for the buried pipe.

The maximum differential displacements of the buildings are determined using Table 3.7 Spectral Response Summary Tables from Ref. 9.4 and 9.42.

Seismic Wave Effects

The seismic event causes waves in the ground, which causes in turn cyclic strains in the buried pipe as it follows the ground curvature.

The peak ground velocity is 15 in/sec, per Ref. 9.5.

The compressional wave velocity is 2100 ft/sec, per Ref. 9.5.

The shear wave velocity is 860 ft/sec, per Ref. 9.5.

The peak ground acceleration is 0.25g, per Ref. 9.5.

4.4 - Soil Properties

The unit weight of soil is 150 lbf/ft^3, per pg. 2.5-159 of Ref. 9.42.

The lower bound modulus of soil reaction of native soil around the trenches is 1000 psi, per Refs. 9.21, 9.22, 9.23 & Table 1 of 9.9.

The upper bound modulus of soil reaction is 3000 psi, per Sections 5.2.2 & 9.3.2 of Ref. 9.20 and Table 1 of Ref. 9.9.

The coefficient of friction between dry soil and HDPE material is 0.70, per Ref. 9.15

The coefficient of soil pressure at rest is 0.33, per Table 2.5-51 of Ref. 9.42.

The soil adhesion for sand backfill material is zero, per Section 7.5.2 of Ref. 9.16.

The soil internal friction angle is 42°, per Table 2.5-51 of Ref. 9.42.

The ground water elevation is 1999'-6" per Ref. 9.42.

4.5 - HDPE Properties

The supply and return line outer diameters are 36", per Ref. 9.44 & 9.45.

The backwash line outer diameter is 4.5", per Ref. 9.44 & 9.45.

The supply line allowable stress is 695 psi, per Ref. 9.25.

The return line allowable stress is 340 psi, per Ref. 9.25.

The modulus of elasticity value is 28000 psi for deadweight and thermal stress analyses, per Table 3031-3 of Ref. 9.1, based on a load duration of 50 years (pg. E-5 of Ref. 9.7) and a temperature of 73°F (conservative) for all piping.

The modulus of elasticity value is 110000 psi for seismic stress analyses, per Table 3031-3 of Ref. 9.1, based on a load duration of less than 10 hours (pg. E-5 of Ref. 9.7) and a temperature of 73°F (conservative) for all piping.

The modulus of elasticity value is conservatively 2000 psi for ring deflection and buckling analyses, per Ref. 9.27, for all piping.

The coefficient of thermal expansion is 1.0E-04 in/in/°F, per Ref. 9.15.

Poisson's ratio is 0.42, per Table A-1 of Ref. 9.15.

The density is 0.959 gm/cc, per Attachment 10.1.

5.0 - Assumptions, Limitations, & Engineering Judgment

5.1 - Assumptions

There are no assumptions that require future verification. All minor assumptions are conservative and are sufficiently justified within the body of the calculation.

5.2 - Limitations

5.2.1 - HDPE Data Limitations

The analysis performed in this calculation uses allowable stress values and modulus of elasticity values from Ref. 9.27. NRC acceptance of the use of these values at Callaway Nuclear Plant is required to validate the results of this calculation.

5.2.2 - Soil Type & Compaction Limitations

The analysis performed in this calculation is based on the use of Class I or Class II soil as defined by ASTM D2321, with a minimum compaction of 95% Standard Proctor Density. The installation specification must ensure that these requirements are met to ensure that the results of this calculation are valid.

5.3 - Engineering Judgment

Basis for engineering judgments are presented wherever they appear in the body of the calculation. There are no engineering judgments made within the body of the calculation that require future verification.

6.0 - Methodology & Acceptance Criteria

6.1 - Methodology

The Nuclear Piping System Classification of the replacement buried ESW HDPE piping analyzed in this design calculation is *ASME Section III, Class 3* piping.

The Seismic Classification of the replacement buried ESW HDPE piping analyzed in this design calculation is *Seismic Category I* piping.

All of the replacement buried ESW HDPE piping analyzed in this calculation is designed to the requirements of ASME Boiler and Pressure Vessel (B&PV) Code Case N-755, "Use of Polyethylene (PE) Plastic Pipe for Section III, Division 1, Construction and Section XI Repair/Replacement Activities," (Ref. 9.1) as approved by ASME B&PV Standards Committee on 02/02/2007, with the exceptions that are discussed in Section 2.3.3 of Ref. 9.13.

Therefore, the evaluations and stress analyses for the replacement buried ESWS HDPE piping are performed using the equations identified in Section -3000 of ASME B&PV Code Case N-755.

Hardware Used:

PC. No. ZD3765
File Server = SNL 2A

Software Used:

Mathcad v11.2 - Sargent & Lundy Program No. 03.7.548-11.2/O
SAP2000 v7.40 - Sargent & Lundy Program No. 03.7.224-7.40

All programs are accessed through the Sargent & Lundy LAN, and have been validated per Sargent & Lundy's Quality Assurance Program using S&L's verification procedures for the intended program functions used in this calculation.

6.1.1 - Analyzed Loads

Design Internal Pressures

The design pressure is used to compute the minimum required wall thickness, the longitudinal stress, and the tensile stress resulting from thermal contraction of the pipe. Per calculations performed in Section 7.1, pressure surges due to rapid changes in flow velocity are not considered. Based on the system pump ramp-up/coast down and valve opening/closing times, there are no credible scenarios capable of causing significant rapid change velocities. Also, per Ref. 9.17, the piping is not designed for negative internal (vacuum) pressure.

Design Temperatures

When the pipe temperature is different from the soil temperature, the pipe will expand or contract relative to the soil. The soil stiffness will resist the thermal displacement. The temperature differential is applied to the pipe confined by the soil and the resulting loads are calculated throughout the system (Ref. 9.7).

The maximum differential temperatures are determined by consideration of the extreme fluid and ground temperatures for worst case conditions.

These temperatures are used to:

- Establish the hydrostatic design basis stresses & the design allowable stresses
- Calculate the stresses caused by the constrained expansion of the pipe.
- Verify that the minimum temperature is above the brittle transition temperature of the material (See Table A-1 of Ref. 9.15).

Soil Load

The soil load is considered with surface live load to check the compression of the sidewalls, to check the ring deflection, and to check for buckling of the piping to ensure that the pipe is not overloaded to the point of ovalizing, which would affect the flow of the sevice water, and reduce its operating life.

Live Load

The surface live load is considered with the soil load to check the compression of the sidewalls, to check the ring deflection, and to check for buckling of the piping to ensure that the pipe is not overloaded to the point of ovalizing, which would affect the flow of the service water, and reduce its operating life.

Seismic Loads

There are two potential sources for seismic loads on the buried piping: (1) loads from seismic anchor movements (SAMs) of the buildings that form the boundaries for the buried piping and (2) loads from wave propagation in the soil.

Seismic anchor movements (SAMs) are determined from the maximum differential displacements of buildings that form the boundaries for the buried piping. These SAMs are the building displacements at the elevations where the piping enters/exits the buildings. The SAP2000 finite element analysis models' fixed-end boundary conditions at the anchor supports inside the buildings/vaults provide accurate terminations for computing SAM stresses.

As preliminary finite element analyses studies indicate, the lower the soil spring stiffness, the higher the thermal stresses in the buried HDPE pipe. However for seismic analyses, the higher the soil spring stiffness, the higher the SAM stresses, which controls over the equivalent temperature rise due to seismic wave effects.

Therefore, all seismic analyses performed using SAP2000 (finite element analyses) for return and backwash lines are conservatively modeled using twice the average soil spring values in the three orthogonal directions. All thermal stress analyses performed using SAP2000 (finite element analyses) for return and backwash lines are conservatively modeled using half of the average soil spring values in the three orthogonal directions.

This approach is conservative because it captures the worst case effects of a wide range of soil properties as well as the appropriate governing range of behavior of distributed bilinear springs.

6.1.2 - Service Levels

Service Level A (Normal Loads)

The Normal Loads shall be evaluated in accordance with Paragraph -3035 of ASME Code Case N-755 (Ref. 9.1) and shall include the following:

- Design Pressure

The design pressure of the replacement buried ESW HDPE piping shall bound the maximum expected operating pressure of the applicable line, excluding operation of the ESW system pump at shutoff head, per Attachment A of Ref. 9.17.

Service Level B (Upset Loads)

The Upset Loads shall be evaluated in accordance with Paragraph -3035 of ASME Code Case N-755 (Ref. 9.1) and shall include the following:

- Upset Pressure
- Seismic Loads (OBE)

The upset pressure of the replacement buried ESW HDPE piping shall bound the maximum expected operating pressure of the applicable line, excluding operation of the ESW system pump at shutoff head, per Attachment A of Ref. 9.17.

The seismic loads for this service level are OBE; however, SSE loads are conservatively used in the analysis with OBE allowables.

Service Level D (Faulted Loads)

The Faulted Loads shall be evaluated in accordance with Paragraph -3035 of ASME Code Case N-755 (Ref. 9.1) and shall include the following:

- Faulted Pressure
- Seismic Loads (SSE)

The faulted pressure shall be the same as the upset pressure.

The pressures and the seismic loads are the same for this service level as they are for Service Level B, and the allowables for this service level are higher; Therefore, Service Level B is the governing case.

The Supply & Return Lines are evaluated using this conservative governing case (i.e.: Faulted Pressure + SSE Seismic Loads with Service Level B allowables).

The Backwash Lines are evaluated using both cases (i.e.: [Upset Pressure + OBE Seismic Loads with Service Level B allowables] and [Faulted Pressure + SSE Seismic Loads with Service Level D allowables]) because the governing case proved to be too conservative to qualify.

6.2 - Acceptance Criteria

6.2.1 - Code Case Evaluations

Pressure Design of Pipe

Minimum Required Wall Thickness

Per Paragraph -3021.1 of ASME Code Case N-755 (Ref. 9.1):

$t_{design} = t_{min} + c$

where,

t_{design} = minimum required wall thickness, in

t_{min} = pressure design thickness, in

c = the sum of mechanical allowances and erosion allowance, in

$$t_{min} = \frac{P_D \cdot D}{\left(2 \cdot S + P_D\right)}$$

where,

P_D = piping system internal design gage pressure, psig

D = pipe outside diameter, in

S = allowable stress, psi

Allowable Service Level Spikes due to Transient Pressures

Calculations are performed in Section 7.1 of this calculation to demonstrate that transient pressures do not need to be considered.

Pressure Design of Joints and Fittings

Per Section -3022 of ASME Code Case N-755 (Ref. 9.1):

3022.1: Polyethylene pipe shall be joined using the butt fusion process. All connections to metallic piping shall be flanged joints.

3022.2: Sustained pressure and pressure rating of polyethylene pipe fittings shall comply with the specifications listed in Supplement 2. The pressure rating of fittings shall be equal to or greater than the attached straight pipe.

3022.3: Flanged connections shall include a metallic back-up ring and shall provide a leak tight joint up to and including the piping hydrostatic test pressure. In addition, the maximum surge pressure, per Section -3021.2 , shall not cause permanent deformation of the pipe.

3022.4: Mitered elbows shall comply with the requirements of ND-3644. In place of ND-3644(e) butt fusion joints shall be used in accordance with ASME Code Case N-755. In addition, the mitered elbows shall be one dimension ratio (DR) lower than that of the attached straight pipe.

The requirements for items 3022.1 & 3022.2 are included in Ref. 9.26.

The requirements for item 3022.3 are not applicable (no pressure surge), per Section 7.1 of this calculation.

The requirements for item 3022.4 are included in Sections 5.2 and 6.4 of Ref. 9.26.

Based on Ref. 9.9, fusion joints for HDPE piping are self-restraining, and do not require thrust restraints.

Soil and Surcharge Loads

Ring Deflection

Per Paragraph -3031 of ASME Code Case N-755 (Ref. 9.1):

$$\Omega = \frac{K \cdot L \cdot P_E + K \cdot P_L}{\frac{2}{3} \cdot E_{pipe} \cdot \left(\frac{1}{DR - 1}\right)^3 + 0.061 \cdot F_S \cdot E'} \leq \Omega_{max}$$

where,

Ω = ring deflection

K = bedding factor

L = deflection lag factor

P_E = vertical soil pressure due to earth loads, psf

P_L = vertical soil pressure due to live loads, psf

E_{pipe} = apparent modulus of elasticity of pipe at 50 years, psi

F_S = soil support factor

E' = modulus of soil reaction, psi

Ω_{max} = max allowable ring deflection

$DR = \frac{D_{avg}}{t_{min}}$ dimension ratio of pipe

D_{avg} = average outside diameter, in

t_{min} = minimum wall thickness, in

Compression of Sidewalls

Per Paragraph -3032 of ASME Code Case N-755 (Ref. 9.1):

$$\sigma_{sw} = \frac{(P_E + P_L) \cdot DR}{2} \leq 1000 \cdot psi$$

where,

σ_{sw} = circumferential compressive stress in the sidewalls of pipe, psi

External Pressure

Buckling Due to External Pressure

Per Paragraph -3033.1 of ASME Code Case N-755 (Ref. 9.1):

$$P_{hydro} = P_E + P_L + P_{gw} \leq 2.8 \cdot \left[\frac{R \cdot B' \cdot E' \cdot E_{pipe}}{12 \cdot (DR - 1)^3} \right]^{\frac{1}{2}}$$

where,

P_{hydro} = external pressure from earth loads, live loads, and ground water, psi

R = buoyancy reduction factor

B' = burial factor

P_{gw} = pressure due to ground water

Effects of Negative Internal Pressure

The replacement buried ESW HDPE pipe systems analyzed in this calculation are not designed for negative internal pressure (ie: vacuum pressure), per Section 7.6.1 of Ref. 9.17.

Flotation

Per Paragraph -3034 of ASME Code Case N-755 (Ref. 9.1):

$$W_W < W_P + P_E \cdot D$$

where,

W_W = weight of water displaced by pipe, lbf/ft

W_P = weight of empty pipe, lbf/ft

Longitudinal Stress Design

Longitudinal Stress due to Applied Mechanical Loads

Per Paragraph -3035.1 of ASME Code Case N-755 (Ref. 9.1):

$$B_1 \cdot \frac{P_a \cdot D}{2 \cdot t} + 2 \cdot B_1 \cdot \frac{F_a}{A} + B_2 \cdot \frac{M}{Z} \leq k \cdot S$$

where,

B_1 = stress index, defined in Ref. 9.1

P_a = Design or Service Level A, B, or D pressure, psi

D = outside pipe diameter, in

t = nominal pipe wall thickness, in

F_a = axial force due to the Design or Service Level A, B, or D pressure, lbf

A = cross section area of pipe wall, in^2

B_2 = stress index, defined in Ref. 9.1

M = moment due to the Design or Service Level A, B, or D pressure, in-lbf

Z = section modulus of pipe cross section, in^3

k = Design and Service Level longitudinal stress factor from Ref. 9.1

S = allowable stress, psi

Temperature Design

Minimum Temperature

Per Paragraph -3041 of ASME Code Case N-755 (Ref. 9.1):

The polyethylene material shall not be used at a temperature less than -50 °F.

Fully Constrained Thermal Contraction

Per Paragraph -3042.1 of ASME Code Case N-755 (Ref. 9.1):

$$\sigma_\tau = \left| E_{pipe} \cdot \alpha \cdot \Delta T - \nu \cdot \frac{P \cdot D}{2 \cdot t} \right| \leq S \qquad \text{for} \qquad T_{water} < T_{ground}$$

where,

σ_τ = tensile stress resulting from thermal contraction of pipe, psi

α = coefficient of thermal expansion, in/in/°F

ΔT = temperature differential between water and ground, °F

Fully Constrained Thermal Expansion

Per Paragraph -3042.2 of ASME Code Case N-755 (Ref. 9.1):

$$\sigma_\tau = E_{pipe} \cdot \alpha \cdot \Delta T \leq S \qquad \text{for} \qquad T_{water} > T_{ground}$$

where,

σ_τ = compressive stress resulting from thermal expansion of pipe, psi

Alternative Thermal Expansion or Contraction Evaluation

Per Paragraph -3042.3 of ASME Code Case N-755 (Ref. 9.1), the soil stiffness may be accounted for to calculate pipe expansion and contraction stresses.

The stresses shall satisfy the following equation:

$$\frac{i \cdot M_C}{Z} + \frac{F_{aC}}{A} < 1100 \cdot psi$$

where,

i = stress intensification factor, per Ref. 9.1

M_C resultant moment due to thermal expansion or contraction, in-lbf

F_{aC} = resultant axial force due to thermal expansion or contraction, lbf

<u>Non-Repeated Anchor Movements</u>

Per Paragraph -3043 of ASME Code Case N-755 (Ref. 9.1):

$$\frac{i \cdot M_D}{Z} + \frac{F_{aD}}{A} < 2 \cdot S$$

where,

i = stress intensification factor

M_D = moment due to non-repeated anchor motion, in-lbf

F_{aD} = axial force due to non-repeated anchor motion, lbf

However, this condition does not exist because the buildings have settled and any permanent movement is bounded by the Seismic Anchor Movements (SAMs).

Seismic Design

Per Paragraph -3050 of ASME Code Case N-755 (Ref. 9.1):

$$\frac{i \cdot M_E}{Z} + \frac{F_{aE}}{A} < 1100 \cdot psi$$

where,

i = stress intensification factor, per Ref. 9.1

M_E = moment due to combined effects of seismic wave passage, seismic soil movement, and building seismic anchor motion effects, in-lbf

F_{aE} = axial force due to combined effects of seismic wave passage, seismic soil movement, and building seismic anchor motion effects, lbf

Seismic soil movements are caused by seismic induced liquefaction, fault movement and landslides (Ref. 9.18). Per Section 2.5.1.2.5.5 of Ref. 9.42, during field and laboratory programs at Callaway Nuclear Station, none of soil and rock samples indicated any potential for instability because of mineralogy, lack of consolidation or water content. The liquefaction potential of the subsurface material, as discussed in Section 2.5.4.8 of Ref. 9.42, is nil. Per Ref. 9.20, the gradation requirements for the installation of the new buried ESW piping system are similar to the existing conditions. Therefore, seismic soil movements are not applicable.

6.2.2 - Additional Evaluations

In addition to the ASME Code Case N-755 requirements, finite element analyses (SAP2000) of the return and backwash lines were performed to determine the stresses effects of the total differential temperatures versus the stress effects considering the difference between the average temperature and the minimum ground temperature plus corresponding gradient stress.

Thermal Stress

Load Case 1:

This load case conservatively considers that the entire pipe line is the same maximum differential temperature across the entire cross-section of the pipe.

Load Case 2:

This load case more realistically considers that the outer surface of the pipe will be the same temperature as the minimum ground temperature and the inner surface of the pipe line will be the same temperature as the maximum water temperature. Since HDPE is a poor conductor, the heat energy will take a significant amount of time to transfer in the outward radial direction. Therefore, due to expansion, longitudinal tension along the inner surface of the pipe line and longitudinal compression, due to contraction along the outer surface of the pipe line will result in a thermal gradient stress. The thermal gradient stress is computed by hand and is combined with the stress that is computed using the SAP2000 output that considers the temperature load as the difference between the average temperature and the minimum ground temperature.

7.0 - Calculations

Units & Conversions

Speed:

$fps := \frac{ft}{sec}$ $\quad$ $ips := \frac{in}{sec}$

Force:

$kip := 1000 \cdot lbf$

Stress/Pressure:

$psf := \frac{lbf}{ft^2}$ $\quad$ $ksi := 1000 \cdot psi$

Density:

$pcf := \frac{lbf}{ft^3}$ $\quad$ $pci := \frac{lbf}{in^3}$ $\quad$ $gcc := \frac{gm}{cm^3}$

Temperature:

$degF := R$

Section 7.1 - Pressure Design of HDPE Pipe

Section 7.1.1 - Supply Lines (EF-003-AZC-36" & EF-007-AZC-36")

Minimum Required Wall Thickness

$t_{supply} := 3.82 \cdot in$	min required wall thickness, per Table 6.1-1 of Ref. 9.25
$t_{fab.min.supply} := 3.85 \cdot in$	min fabricated wall thickness, per Section 2.3.8 of Ref. 9.13
$D := 36 \cdot in$	pipe average outside diameter, per Ref. 9.13
$P_{D.s} := 165 \cdot psi$	internal design gage pressure, per Ref. 9.13, excluding pressure surges from anticipated water hammer events
$S_1 := 695 \cdot psi$	allowable stress for 40 year load duration at 95 degF, per Table 2.8-1 of Ref. 9.25

Allowable Service Level Spikes due to Transient Pressures

Using Table 14.10 of Ref. 9.10, linearly interpolate to determine the approximate bulk modulus of water for the supply line pressure and temperature conditions.

Compute bulk modulus of water at 15 psi:

$p_1 := 15 \cdot psi$	lower bound pressure for linear interpolation
$y_{1.1} := 320000 \cdot psi$	bulk modulus of water for 68 degF at 15 psi
$y_{1.2} := 332000 \cdot psi$	bulk modulus of water for 120 degF at 15 psi
$x_{1.1} := 68 \cdot degF$	temperature corresponding to bulk modulus of water of 320000 psi at 15 psi
$x_{1.2} := 120 \cdot degF$	temperature corresponding to bulk modulus of water of 332000 psi at 15 psi
$x_1 := 95 \cdot degF$	maximum temperature for supply pipe
$b_1 := 304307.69 \cdot psi$	bulk modulus of water at 0 psi
$K_1 := \frac{y_{1.2} - y_{1.1}}{x_{1.2} - x_{1.1}} \cdot x_1 + b_1$	bulk modulus of water for 15 psi at 95 degF

$K_1 = 326230.77\,psi$

Compute bulk modulus of water at 1500 psi:

$p_{1'} := 1500 \cdot psi$ — upper bound pressure for linear interpolation

$y_{1.1'} := 330000 \cdot psi$ — bulk modulus of water for 68 degF at 1500 psi

$y_{1.2'} := 340000 \cdot psi$ — bulk modulus of water for 120 degF at 1500 psi

$x_{1.1'} := 68 \cdot degF$ — temperature corresponding to bulk modulus of water of 330000 psi at 1500 psi

$x_{1.2'} := 120 \cdot degF$ — temperature corresponding to bulk modulus of water of 340000 psi at 1500 psi

$x_{1'} := 95 \cdot degF$ — maximum temperature for supply pipe

$b_{1'} := 316923.08 \cdot psi$ — bulk modulus of water at 0 psi

$K_{1'} := \frac{y_{1.2'} - y_{1.1'}}{x_{1.2'} - x_{1.1'}} \cdot x_{1'} + b_{1'}$ — bulk modulus of water for 1500 psi at 95 degF

$K_{1'} = 335192.31\,psi$

$m_s := \frac{K_{1'} - K_1}{p_{1'} - p_1}$ — slope of combined lines for 95 degF

$b_s := 326140.25 \cdot psi$ — bulk modulus of water at 0 psi

$K_s := m_s \cdot P_{D.s} + b_s$ — linearly interpolated bulk modulus of water for 165 psi at 95 degF (supply line)

$K_s = 327135.98\,psi$

$\gamma_{water} := 62.4 \cdot pcf$ weight density of water, per Ref. 9.3

$\rho_w := \frac{\gamma_{water}}{g}$ mass density of water

$\rho_w = 0.036 \frac{lb}{in^3}$

$DR := \frac{D}{t_{fab.min.supply}}$ dimension ratio of pipe, per Section 3010 of Ref. 9.1

$DR = 9.35$

$E := 110000 \cdot psi$ modulus of elasticity of pipe for near instantaneous pressure rise, per Table 3031-3 of Ref. 9.1

$$a_{sonic.1} := \sqrt{\frac{\left(\frac{K_s}{\rho_w}\right)}{1 + (DR - 2) \cdot \left(\frac{K_s}{E}\right)}}$$ sonic wave velocity in water

$a_{sonic.1} = 1030.77 \frac{ft}{sec}$

Per pg. 172 of the PPI Handbook (Ref. 9.9), the velocity change (max water velocity) must be abrupt, such as a rapid valve operation or a pump startup or shutdown. Therefore, the critical time for the sudden velocity change must be computed.

$L_{max} := 1000 \cdot ft$ conservative pipe length; compare to Ref. 9.33

$T_{c.1} := \frac{2 \cdot L_{max}}{a_{sonic.1}}$ critical time, per Eqn. 1-23 of Ref. 9.9

$T_{c.1} = 1.94 s$

$T_{min.cat} := 11.3 \cdot sec$ minimum component actuation time (Valve EFPDV0019), per Ref. 9.14

$T_{min.cat} > T_{c.1}$ therefore, transient pressure surge is neglected

Section 7.1.2 - Return Lines (EF-083-AZC-36" & EF-140-AZC-36")

Minimum Required Wall Thickness

$t_{return} := 2.235 \cdot in$	min required wall thickness, per Table 6.1-1 of Ref. 9.25
$t_{fab.min.return} := 3.85 \cdot in$	min fabricated wall thickness, per Section 2.3.8 of Ref. 9.13
$D = 36\,in$	pipe average outside diameter, per Ref. 9.13
$P_{D.r} := 45 \cdot psi$	internal design gage pressure, per Ref. 9.13, excluding pressure surges from anticipated water hammer events
$S_2 := 340 \cdot psi$	allowable stress for 30 day load duration at 175 degF, per Table 5.1.5-2 of Ref. 9.25

Note that using the Post-Accident Allowable Stress (340 psi) rather than the Normal Operation Allowable Stress (648.6 psi, per Table 5.1.5-2 of Ref. 9.25) is conservative.

Allowable Service Level Spikes due to Transient Pressures

Using Table 14.10 of Ref. 9.10, linearly interpolate to determine the approximate bulk modulus of water for the supply line pressure and temperature conditions.

Compute bulk modulus of water at 15 psi:

$p_2 := 15 \cdot psi$	lower bound pressure for linear interpolation
$y_{2.1} := 332000 \cdot psi$	bulk modulus of water for 120 degF at 15 psi
$y_{2.2} := 308000 \cdot psi$	bulk modulus of water for 200 degF at 15 psi
$x_{2.1} := 120 \cdot degF$	temperature corresponding to bulk modulus of water of 332000 psi at 15 psi
$x_{2.2} := 200 \cdot degF$	temperature corresponding to bulk modulus of water of 308000 psi at 15 psi
$x_2 := 175 \cdot degF$	maximum temperature for supply pipe
$b_2 := 368000 \cdot psi$	bulk modulus of water at 0 psi
$K_2 := \frac{y_{2.2} - y_{2.1}}{x_{2.2} - x_{2.1}} \cdot x_2 + b_2$	bulk modulus of water for 15 psi at 175 degF

$K_2 = 315500\,psi$

Compute bulk modulus of water at 1500 psi:

$p_{2'} := 1500 \cdot psi$ — upper bound pressure for linear interpolation

$y_{2.1'} := 340000 \cdot psi$ — bulk modulus of water for 120 degF at 1500 psi

$y_{2.2'} := 319000 \cdot psi$ — bulk modulus of water for 200 degF at 1500 psi

$x_{2.1'} := 120 \cdot degF$ — temperature corresponding to bulk modulus of water of 340000 psi at 1500 psi

$x_{2.2'} := 200 \cdot degF$ — temperature corresponding to bulk modulus of water of 319000 psi at 1500 psi

$x_{2'} := 175 \cdot degF$ — maximum temperature for supply pipe

$b_{2'} := 371500 \cdot psi$ — bulk modulus of water at 0 psi

$$K_{2'} := \frac{y_{2.2'} - y_{2.1'}}{x_{2.2'} - x_{2.1'}} \cdot x_{2'} + b_{2'}$$

bulk modulus of water for 1500 psi at 175 degF

$K_{2'} = 325563\,psi$

$$m_r := \frac{K_{2'} - K_2}{p_{2'} - p_2}$$

slope of combined lines for 175 degF

$b_r := 315398 \cdot psi$ — bulk modulus of water at 0 psi

$K_r := m_r \cdot P_{D.r} + b_r$

linearly interpolated bulk modulus of water for 45 psi at 175 degF (return line)

$K_r = 315703\,psi$

$DR = 9.35$ — dimension ratio of pipe, per Section 3010 of Ref. 9.1

$E := 110000 \cdot psi$ — modulus of elasticity of pipe for near instantaneous pressure rise, per Table 3031-3 of Ref. 9.1

$$a_{sonic.2} := \sqrt{\frac{\left(\frac{K_r}{\rho_w}\right)}{1 + (DR - 2) \cdot \left(\frac{K_r}{E}\right)}}$$

sonic velocity in water

$$a_{sonic.2} = 12359.48 \frac{in}{sec}$$

Per pg. 172 of the PPI Handbook (Ref. 9.9), the velocity change (max water velocity) must be abrupt, such as a rapid valve operation or a pump startup or shutdown. Therefore, the critical time for the sudden velocity change must be computed.

$L_{max} := 1000 \cdot ft$ — conservative pipe length; compare to Ref. 9.33

$$T_{c.2} := \frac{2 \cdot L_{max}}{a_{sonic.2}}$$

critical time, per Eqn. 1-23 of Ref. 9.9

$$T_{c.2} = 1.94 s$$

$T_{min.cat} := 11.3 \cdot sec$ — minimum component actuation time (Valve EFPDV0019), per Ref. 9.14

$T_{min.cat} > T_{c.2}$ — therefore, transient pressure surge is neglected

Section 7.1.3 - Backwash Lines (EF-002-AZC-4" & EF-006-AZC-4")

Minimum Required Wall Thickness

$t_{bw} := 0.465 \cdot in$	min required wall thickness, per Table 6.1-1 of Ref. 9.25
$t_{fab.min.bw} := 0.50 \cdot in$	min fabricated wall thickness, per Section 2.3.8 of Ref. 9.13
$D_{bw} := 4.5 \cdot in$	pipe average outside diameter, per Ref. 9.13
$P_{D.bw} := 160 \cdot psi$	internal design gage pressure, per Ref. 9.13, excluding pressure surges from anticipated water hammer events
$S_3 := 695 \cdot psi$	allowable stress for 40 year load duration at 95 degF, per Table 2.8-1 of Ref. 9.25

Allowable Service Level Spikes due to Transient Pressures

Using Table 14.10 of Ref. 9.10, linearly interpolate to determine the approximate bulk modulus of water for the backwash line pressure and temperature conditions.

Compute bulk modulus of water at 15 psi:

$p_3 := 15 \cdot psi$	lower bound pressure for linear interpolation
$y_{3.1} := 320000 \cdot psi$	bulk modulus of water for 68 degF at 15 psi
$y_{3.2} := 332000 \cdot psi$	bulk modulus of water for 120 degF at 15 psi
$x_{3.1} := 68 \cdot degF$	temperature corresponding to bulk modulus of water of 320000 psi at 15 psi
$x_{3.2} := 120 \cdot degF$	temperature corresponding to bulk modulus of water of 332000 psi at 15 psi
$x_3 := 95 \cdot degF$	maximum temperature for supply pipe
$b_3 := 304307.69 \cdot psi$	bulk modulus of water at 0 degF
$K_3 := \frac{y_{3.2} - y_{3.1}}{x_{3.2} - x_{3.1}} \cdot x_3 + b_3$	bulk modulus of water for 15 psi at 95 degF

$K_3 = 326230.77\,psi$

Compute bulk modulus of water at 1500 psi:

$p_{3'} := 1500 \cdot psi$ upper bound pressure for linear interpolation

$y_{3.1'} := 330000 \cdot psi$ bulk modulus of water for 68 degF at 1500 psi

$y_{3.2'} := 340000 \cdot psi$ bulk modulus of water for 120 degF at 1500 psi

$x_{3.1'} := 68 \cdot degF$ temperature corresponding to bulk modulus of water of 330000 psi at 1500 psi

$x_{3.2'} := 120 \cdot degF$ temperature corresponding to bulk modulus of water of 340000 psi at 1500 psi

$x_{3'} := 95 \cdot degF$ maximum temperature for supply pipe

$b_{3'} := 316923.08 \cdot psi$ bulk modulus of water at 0 degF

$K_{3'} := \frac{y_{3.2'} - y_{3.1'}}{x_{3.2'} - x_{3.1'}} \cdot x_{3'} + b_{3'}$ bulk modulus of water for 1500 psi at 95 degF

$K_{3'} = 335192.31\,psi$

$m_{bw} := \frac{K_{3'} - K_3}{p_{3'} - p_3}$ slope of combined lines for 95 degF

$b_{bw} := 326140.25 \cdot psi$ bulk modulus of water at 0 degF

$K_{bw} := m_{bw} \cdot P_{D.bw} + b_{bw}$ linearly interpolated bulk modulus of water for 160 psi at 95 degF (backwash line)

$K_{bw} = 327105.8\,psi$

$DR_{bw} := \frac{D_{bw}}{t_{fab.min.bw}}$ dimension ratio of pipe, per Section 3010 of Ref. 9.1

$DR_{bw} = 9$

$E := 110000 \cdot psi$ modulus of elasticity of pipe for near instantaneous pressure rise, per Table 3031-3 of Ref. 9.1

$$a_{sonic.3} := \sqrt{\frac{\left(\frac{K_{bw}}{\rho_w}\right)}{1 + \left(DR_{bw} - 2\right) \cdot \left(\frac{K_{bw}}{E}\right)}}$$ sonic velocity in water

$a_{sonic.3} = 12661.39 \frac{in}{sec}$

Per pg. 172 of the PPI Handbook (Ref. 9.9), the velocity change (max water velocity) must be abrupt, such as a rapid valve operation or a pump startup or shutdown. Therefore, the critical time for the sudden velocity change must be computed.

$L_{max} := 1000 \cdot ft$ conservative pipe length; compare to Ref. 9.33

$T_{c.3} := \frac{2 \cdot L_{max}}{a_{sonic.3}}$ critical time, per Eqn. 1-23 of Ref. 9.9

$T_{c.3} = 1.9 s$

$T_{min.cat} := 11.3 \cdot sec$ minimum component actuation time (Valve EFPDV0019), per Ref. 9.14

$T_{min.cat} > T_{c.3}$ therefore, transient pressure surge is neglected

Section 7.2 - Pressure Design of Joints and Fittings

Per Section -3022 of ASME Code Case N-755, Rev. 3 (Ref. 9.1):

1. Polyethylene pipe shall be joined using the butt fusion process. All connections to metallic piping shall be flanged joints.
2. Sustained pressure and pressure rating of polyethylene pipe fittings shall comply with the specifications listed in Supplement 2 (Ref. 9.1). The pressure rating of fittings shall be equal to or greater than the attached straight pipe.
3. Flanged connections shall include a metallic back-up ring and shall provide a leak tight joint up to and including the piping hydrostatic test pressure. In addition, the maximum surge pressure, per Section 3021.2 (Ref. 9.1), shall not cause permanent deformation of the pipe.
4. Mitered elbows shall comply with the requirements of ND-3644. In place of ND-3644(e) butt fusion joints shall be used in accordance with ASME Code Case N-755 (Ref. 9.1). In addition, the mitered elbows shall be one dimension ratio (DR) lower than that of the attached straight pipe.

The requirements for items 1 & 2 shall be implemented, per Ref. 9.26.

The requirements for item 3 are not applicable (no pressure surge), per Section 7.1 of this calculation.

The requirements for item 4 shall be implemented, per pg. 8 of MS-02 of MP-07-0066, Rev. (Ref. 9.13).

Section 7.3 - Soil and Surcharge Analysis

Compression of Sidewalls

Per Section 3032 of Ref. 9.1, the circumferential compressive stress in the sidewalls of the pipe and miters due to soil & surcharge loads shall not exceed 1000 psi.

The max soil pressure is conservatively combined with the max surcharge load.

$\gamma_{soil} := 150 \cdot pcf$ — unit weight of soil, per pg. 2.5-159 of Ref. 9.42

$H := 12.5 \cdot ft$ — max height of ground cover, per Ref. 9.33

$P_E := \gamma_{soil} \cdot H$ — vertical soil pressure due to earth loads

$P_E = 1875\,psf$

$P_L := 400 \cdot psf$ — surcharge load (H-20 load @ 4 ft. cover), per Table 3-1 of Ref. 9.12

$DR = 9.35$ — dimension ratio of supply & return lines

$DR_{bw} = 9$ — dimension ratio of backwash pipes lines

$$\sigma_{sw} := \frac{(P_E + P_L) \cdot \max(DR, DR_{bw})}{2}$$

$\sigma_{sw} = 73.86\,psi \quad < \quad 1000\ psi$ **OK**

Section 7.3.1 - Supply Lines

Ring Deflection

The soil and surcharge loads on a buried pipe shall not cause the pipe diameter to deflect (ring deflection, Ω) beyond a limit Ω_{max}.

$K := 0.1$	bedding factor, per Section 3031 of Ref. 9.1
$L := 1.5$	deflection lag factor, per Section 3031 of Ref. 9.1
$\gamma_{soil} = 150\,pcf$	unit weight of soil
$H = 12.5\,ft$	height of ground cover
$P_E = 1875\,psf$	vertical soil pressure due to earth loads
$P_L = 400\,psf$	surcharge load
$E_{pipe} := 2000 \cdot psi$	modulus of elasticity of pipe for ring deflection & buckling, per Ref. 9.27
$DR = 9.35$	dimension ratio of pipe

$E'_N := 1000 \cdot psi$ — modulus of soil reaction of native soil around trench, per Refs. 9.21, 9.22, 9.23 & Table 1 of 9.9

$E' := 3000 \cdot psi$ — modulus of soil reaction, per Sections 5.2.2 & 9.3.2 of Ref. 9.20

$B_d := 5 \cdot ft$ — smallest trench width for 36"ϕ line, per Ref. 9.39

$D = 36\,in$ — pipe outside diameter

$\frac{E'_N}{E'} = 0.33$ — modulus of soil reactions ratio; conservatively consider ratio of 0.30 and linearly interpolate for F_S

$\frac{B_d}{D} = 1.67$ — trench-pipe ratio; conservatively consider ratio of 1.5

$F_S := 0.40$ — soil support factor, per Table 3031-2 of Ref. 9.1 (conservative)

$$\Omega := \left[\frac{K \cdot L \cdot P_E + K \cdot P_L}{\frac{2}{3} \cdot E_{pipe} \cdot \left(\frac{1}{DR - 1} \right)^3 + 0.061 \cdot F_S \cdot E'} \right] \cdot D \qquad \Omega = 1.06\,in$$

ring deflection

$\Omega_{max} := 0.04 \cdot D$ — conservative allowable ring deflection, per Table 3031-1 of Ref. 9.1

$\Omega_{max} = 1.44\,in$ — $\Omega \le \Omega_{max}$ **OK**

Buckling Due to External Pressure

External pressure from ground water, earth loads, and surcharge loads on a buried PE pipe shall not cause the pipe to buckle.

$H = 12.5\,ft$ — height of ground cover

$H_w := H$ — height of water table above pipe

$P_{gw} := \gamma_{water} \cdot H_w$ — ground water pressure

$P_{gw} = 780\,psf$

$R := 1 - 0.33 \cdot \frac{H_w}{H}$ — $R = 0.67$ — buoyancy reduction factor, per Section 3033.1 of Ref. 9.1

$B' := \frac{1}{1 + 4 \cdot e^{\left(-0.065 \cdot \frac{H}{ft}\right)}}$ — $B' = 0.36$ — burial factor, per Section 3033.1 of Ref. 9.1

$P_{hydro} := P_E + P_L + P_{gw}$ — external pressure from earth loads, surcharge loads, & groundwater on the buried PE pipe

$P_{hydro} = 21.22\,psi$

$$2.8 \cdot \left[\frac{(R \cdot B' \cdot E' \cdot E_{pipe})}{12 \cdot (DR - 1)^3}\right]^{\frac{1}{2}} = 40.32\,psi$$

external pressure pipe buckling capacity equation, per Section 3033.1 of Ref. 9.1

$$P_{hydro} = 21.22\,psi \quad < \quad 2.8 \cdot \left[\frac{(R \cdot B' \cdot E' \cdot E_{pipe})}{12 \cdot (DR - 1)^3}\right]^{\frac{1}{2}} = 40.32\,psi$$

OK

Effects of Negative Internal Pressure

The supply pipe lines are not designed for negative internal pressure (ie: vacuum pressure), per Section 7.6.1 of Ref. 9.17.

Section 7.3.2 - Return Lines

Ring Deflection

The soil and surcharge loads on a buried pipe shall not cause the pipe diameter to deflect (ring deflection, Ω) beyond a limit Ω_{max}.

$K = 0.1$	bedding factor
$L = 1.5$	deflection lag factor
$\gamma_{soil} = 150\,pcf$	unit weight of soil
$H_W = 12.5\,ft$	height of water table above pipe
$H = 12.5\,ft$	height of ground cover
$P_E = 1875\,psf$	vertical soil pressure due to earth loads
$P_L = 400\,psf$	surcharge load
$E_{pipe} = 2000\,psi$	modulus of elasticity, per Ref. 9.27

$DR = 9.35$ dimension ratio of pipe

$E'_N = 1000\,psi$ modulus of soil reaction of native soil around trench

$E' = 3000\,psi$ modulus of soil reaction

$B_d = 5\,ft$ minimum trench width

$D = 36\,in$ pipe outside diameter

$\frac{E'_N}{E'} = 0.33$ modulus of soil reactions ratio; conservatively consider ratio of 0.30 and linearly interpolate for F_S

$\frac{B_d}{D} = 1.67$ trench-pipe ratio; conservatively consider ratio of 1.5

$F_S = 0.4$ soil support factor

$$\Omega := \left[\frac{K \cdot L \cdot P_E + K \cdot P_L}{\frac{2}{3} \cdot E_{pipe} \cdot \left(\frac{1}{DR - 1}\right)^3 + 0.061 \cdot F_S \cdot E'}\right] \cdot D$$

$\Omega = 1.06\,in$ ring deflection

$\Omega_{max} := 0.04 \cdot D$ conservative allowable ring deflection

$\Omega_{max} = 1.44\,in$ $\Omega \le \Omega_{max}$ **OK**

Buckling Due to External Pressure

External pressure from ground water, earth loads, and surcharge loads on a buried PE pipe shall not cause the pipe to buckle.

$H = 12.5\,ft$ — height of ground cover

$H_w := H$ — height of water table above pipe

$P_{gw} = 780\,psf$ — pressure due to ground water

$R := 1 - 0.33 \cdot \frac{H_w}{H}$ — buoyancy reduction factor, per Section 3033.1 of Ref. 9.1

$R = 0.67$

$B' := \frac{1}{1 + 4 \cdot e^{\left(-0.065 \cdot \frac{H}{ft}\right)}}$ — burial factor, per Section 3033.1 of Ref. 9.1

$B' = 0.36$

$P_{hydro} := P_E + P_L + P_{gw}$ — external pressure from earth loads, surcharge loads, & groundwater on the buried PE pipe

$P_{hydro} = 21.22\,psi$

$$2.8 \cdot \left[\frac{\left(R \cdot B' \cdot E' \cdot E_{pipe}\right)}{12 \cdot (DR - 1)^3} \right]^{\frac{1}{2}} = 40.32\,psi$$

external pressure pipe buckling capacity equation, per Section 3033.1 of Ref. 9.1

$$P_{hydro} = 21.22\,psi \quad < \quad 2.8 \cdot \left[\frac{\left(R \cdot B' \cdot E' \cdot E_{pipe}\right)}{12 \cdot (DR - 1)^3} \right]^{\frac{1}{2}} = 40.32\,psi$$

OK

<u>Effects of Negative Internal Pressure</u>

The pipe line is not designed for a negative internal pressure (ie: vacuum pressure), per Section 7.6.1 of Ref. 9.17.

Section 7.3.3 - Backwash Lines

Ring Deflection

The soil and surcharge loads on a buried pipe shall not cause the pipe diameter to deflect (ring deflection, Ω) beyond a limit Ω_{max}.

$K := 0.1$	bedding factor, per Section 3031 of Ref. 9.1
$L := 1.5$	deflection lag factor, per Section 3031 of Ref. 9.1
$\gamma_{soil} = 150\,pcf$	unit weight of soil
$H_{bw} := 5.25 \cdot ft$	max backwash ground cover height, per Att. 10.1
$P_{E.bw} := \gamma_{soil} \cdot H_{bw}$	vertical soil pressure due to earth loads
$P_{E.bw} = 787.5\,psf$	
$P_L = 400\,psf$	surcharge load
$E_{pipe} = 2000\,psi$	modulus of elasticity of pipe for ring deflection & buckling, per Ref. 9.27
$DR_{bw} = 9$	dimension ratio of pipe

$E'_N := 1000 \cdot psi$ — modulus of soil reaction of native soil around trench, per 9.21, 9.22, 9.23 & Table 1 of 9.9

$E' := 3000 \cdot psi$ — modulus of soil reaction, per Sections 5.2.2 & 9.3.2 of Ref. 9.20

$B_d := 2.375 \cdot ft$ — min trench width, per Ref. 9.39

$D_{bw} = 4.5 in$ — pipe outside diameter

$\frac{E'_N}{E'} = 0.33$ — modulus of soil reactions ratio; conservatively consider ratio of 0.30 and linearly interpolate for F_S

$\frac{B_d}{D_{bw}} = 6.33$ — trench-pipe ratio; conservatively consider ratio of 5

$F_S := 1.00$ — soil support factor, per Table 3031-2 of Ref. 9.1 (conservative)

$$\Omega := \left[\frac{K \cdot L \cdot P_{E.bw} + K \cdot P_L}{\frac{2}{3} \cdot E_{pipe} \cdot \left(\frac{1}{DR_{bw} - 1} \right)^3 + 0.061 \cdot F_S \cdot E'} \right] \cdot D_{bw} \qquad \Omega = 0.03 in$$

ring deflection

$\Omega_{max} := 0.04 \cdot D_{bw}$ — maximum allowable ring deflection, per Table 3031-1 of Ref. 9.1

$\Omega_{max} = 0.18 in$ — $\Omega \le \Omega_{max}$ **OK**

Buckling Due to External Pressure

External pressure from ground water, earth loads, and surcharge loads on a buried PE pipe shall not cause the pipe to buckle.

$H_{bw} = 5.25\,ft$ height of ground cover

$H_{bw.w} := H_{bw}$ height of water table above pipe

$P_{gw.bw} := \gamma_{water} \cdot H_{bw.w}$ ground water pressure

$P_{gw.bw} = 327.6\,psf$

$R := 1 - 0.33 \cdot \frac{H_{bw.w}}{H_{bw}}$ $R = 0.67$ buoyancy reduction factor, per Section 3033.1 of Ref. 9.1

$B' := \frac{1}{1 + 4 \cdot e^{\left(-0.065 \cdot \frac{H}{ft}\right)}}$ $B' = 0.36$ burial factor, per Section 3033.1 of Ref. 9.1

$P_{hydro} := P_{E.bw} + P_L + P_{gw.bw}$ external pressure from earth loads, surcharge loads, & groundwater on the buried PE pipe

$P_{hydro} = 10.52\,psi$

$$2.8 \cdot \left[\frac{\left(R \cdot B' \cdot E' \cdot E_{pipe}\right)}{12 \cdot \left(DR_{bw} - 1\right)^3}\right]^{\frac{1}{2}} = 42.99\,psi$$

external pressure pipe buckling capacity equation, per Section 3033.1 of Ref. 9.1

$$P_{hydro} = 10.52\,psi \quad < \quad 2.8 \cdot \left[\frac{\left(R \cdot B' \cdot E' \cdot E_{pipe}\right)}{12 \cdot \left(DR_{bw} - 1\right)^3}\right]^{\frac{1}{2}} = 42.99\,psi$$

OK

Effects of Negative Internal Pressure

The pipe line is not designed for a negative internal pressure (ie: vacuum pressure), per Section 7.6.1 of Ref. 9.17.

Section 7.4 - Flotation Analysis

Buried PE pipe shall have sufficient cover or be anchored to the ground to prevent flotation by groundwater.

$ID := D - 2 \cdot t_{fab.min.supply}$
$ID = 28.3\,in$

inner diameter of supply & return pipe lines

$A_{id.p} := \frac{\pi}{4} \cdot ID^2$
$A_{id.p} = 629.02\,in^2$

cross-sectional area of supply & return pipe lines corresponding to inner diameter

$A_p := \frac{\pi}{4} \cdot \left(D^2 - ID^2\right)$
$A_p = 388.86\,in^2$

cross-sectional area of supply & return pipe lines corresponding to wall thickness

$ID_{bw} := D_{bw} - 2 \cdot t_{fab.min.bw}$
$ID_{bw} = 3.5\,in$

inner diameter of backwash pipe lines

$A_{id.p.bw} := \frac{\pi}{4} \cdot ID_{bw}^2$
$A_{id.p.bw} = 9.62\,in^2$

cross-sectional area of backwash pipe lines corresponding to inner diameter

$A_{p.bw} := \frac{\pi}{4} \cdot \left(D_{bw}^2 - ID_{bw}^2\right)$
$A_{p.bw} = 6.28\,in^2$

cross-sectional area of backwash pipe lines corresponding to wall thickness

$\gamma_{water} = 62.4 \frac{lbf}{ft^3}$

density of water

$W_w := \gamma_{water} \cdot A_{id.p}$
$W_w = 272.57 \frac{lbf}{ft}$

weight of water displaced by supply and/or return pipe lines; upward resultant force due to buoyancy on a buried pipe

$W_{w.bw} := \gamma_{water} \cdot A_{id.p.bw}$
$W_{w.bw} = 4.17 \frac{lbf}{ft}$

weight of water displaced by backwash pipe lines

$w_{pipe} := (0.959 \cdot gcc) \cdot g$ density of pipe material, per Attachment 10.1

$w_{pipe} = 59.87\,pcf$

$W_P := w_{pipe} \cdot A_p$ weight of empty 36" pipe per unit length

$W_P = 161.67 \frac{lbf}{ft}$

$W_{P.bw} := w_{pipe} \cdot A_{p.bw}$ weight of empty 4" pipe per unit length

$W_{P.bw} = 2.61 \frac{lbf}{ft}$

$H_{min} := 42 \cdot in$ minimum cover for supply, return & backwash lines, per Ref. 9.33

$P_{E.min} := H_{min} \cdot \gamma_{soil}$ minimum vertical soil pressure due to earth loads

$P_{E.min} = 3.65\,psi$

Supply & Return Pipe Lines:

$W_P + P_{E.min} \cdot D = 1736.67 \frac{lbf}{ft}$ downward resultant force due to DL of empty pipe & vertical soil pressure earth loads, per Ref. 9.1

$W_w = 272.57 \frac{lbf}{ft} \quad < \quad W_P + P_{E.min} \cdot D = 1736.67 \frac{lbf}{ft}$ **OK**

Backwash Pipe Lines:

$W_{P.bw} + P_{E.min} \cdot D_{bw} = 199.49 \frac{lbf}{ft}$ downward resultant force due to DL of empty pipe & vertical soil pressure earth loads, per Ref. 9.1

$W_{w.bw} = 4.17 \frac{lbf}{ft} \quad < \quad W_{P.bw} + P_{E.min} \cdot D_{bw} = 199.49 \frac{lbf}{ft}$ **OK**

Therefore, the unanchored supply, return, and backwash lines will not float.

Section 7.5 - Longitudinal Stress Analysis

Section 7.5.1 - Supply Lines

Longitudinal Stress due to Applied Mechanical Loads

Longitudinal applied mechanical loads, longitudinal stresses due to axial forces & bending moments resulting from applied mechanical loads shall not exceed kxS.

Per Section 6.1.2 of this calculation, Service Level B is the governing case. Per Section 7.7.1 of this calculation, use Train B Return Line seismic induced stresses.

$k := 1.1$	design and service level longitudinal stress factor, per Table 3035-2 of Ref. 9.1
$B_1 := 0.5$	stress index for a straight and butt fused joint with a DR = 9.35, per Table 3035-1 of Ref. 9.1
$P_{upset.s} := 190 \cdot psi$	upset pressure (Ref. 9.13), per Section 6.1.2
$t_{fab.min.supply} = 3.85 in$	pipe wall thickness
$F_a := 65.19 \cdot kip$	axial force at joint 32 due to combined seismic induced forces, per Section 7.7.2 (conservatively use seismic forces from the return line analysis)
$A_p = 388.86 in^2$	cross-sectional area of pipe wall
$B_2 := 1.0$	stress index for a straight and butt fused joint with a DR = 9.35, per Table 3035-1 of Ref. 9.1
$M := 213.33 \cdot kip \cdot in$	moment at joint 32 due to combined seismic induced forces, per Section 7.7.2

$$Z := \pi \cdot \frac{\left[D^4 - \left(D - 2 \cdot t_{fab.min.supply}\right)^4\right]}{32 \cdot D} \qquad Z = 2831.23 in^3$$

section modulus of pipe

$$B_1 \cdot \frac{P_{upset.s} \cdot D}{2 \cdot t_{fab.min.supply}} + 2 \cdot B_1 \cdot \frac{F_a}{A_p} + B_2 \cdot \frac{M}{Z} = 687.15\,psi$$

longitudinal stress resulting from applied mechanical loads

$k \cdot S_1 = 764.5\,psi$ allowable longitudinal stress

$$k \cdot S_1 \geq B_1 \cdot \frac{P_a \cdot D}{2 \cdot t_{fab.min.supply}} + 2 \cdot B_1 \cdot \frac{F_a}{A} + B_2 \cdot \frac{M}{Z}$$

OK

$$\frac{B_1 \cdot \frac{P_{upset.s} \cdot D}{2 \cdot t_{fab.min.supply}} + 2 \cdot B_1 \cdot \frac{F_a}{A_p} + B_2 \cdot \frac{M}{Z}}{k \cdot S_1} = 0.9 \quad < \quad 1.0$$

OK

Note that this evaluation is conservative because Service Level D loads (ie: Faulted Pressure + SSE Seismic) are checked against Service Level B allowable.

Section 7.5.2 - Return Lines

Longitudinal Stress due to Applied Mechanical Loads

Longitudinal applied mechanical loads, longitudinal stresses due to axial forces & bending moments resulting from applied mechanical loads shall not exceed kxS.

Per Section 6.1.2 of this calculation, Service Level B is the governing case.

Use Service Level D pressure with SSE seismic and Service Level B allowable.

$k := 1.1$ — design and service level longitudinal stress factor for Service Level B, per Table 3035-2 of Ref. 9.1

$B_1 := 0.50$ — stress index for straight pipe with a DR = 9.35, per Table 3035-1 of Ref. 9.1

$P_{upset.r} := 45 \cdot psi$ — upset pressure (Ref. 9.13), per Section 6.1.2

$t_{fab.min.return} = 3.85\,in$ — pipe wall thickness

$F_a := 65.19 \cdot kip$ — axial force at joint 32 due to combined seismic induced forces, per Section 7.7.2

$A_p := \frac{\pi}{4} \cdot \left[D^2 - \left(D - 2 \cdot t_{fab.min.return} \right)^2 \right]$ — cross-sectional area of pipe

$A_p = 388.86\,in^2$

$B_2 := 1.0$ — stress index for straight pipe with a DR = 9.35, per Table 3035-1 of Ref. 9.1

$M := 213.33 \cdot kip \cdot in$ moment at joint 32 due to combined seismic induced forces, per Section 7.7.2

$Z = 2831.23 in^3$ section modulus of pipe cross-section

$$B_1 \cdot \frac{P_{D.r} \cdot D}{2 \cdot t_{fab.min.return}} + 2 \cdot B_1 \cdot \frac{F_a}{A_p} + B_2 \cdot \frac{M}{Z} = 348.19\,psi$$

longitudinal stress resulting from applied mechanical loads

$k \cdot S_2 = 374\,psi$ allowable longitudinal stress

$$k \cdot S_2 \geq B_1 \cdot \frac{P_a \cdot D}{2 \cdot t_{fab.min.return}} + 2 \cdot B_1 \cdot \frac{F_a}{A} + B_2 \cdot \frac{M}{Z}$$

OK

$$\frac{B_1 \cdot \frac{P_{upset.r} \cdot D}{2 \cdot t_{fab.min.return}} + 2 \cdot B_1 \cdot \frac{F_a}{A_p} + B_2 \cdot \frac{M}{Z}}{k \cdot S_2} = 0.93 \quad < \quad 1.0$$

OK

Note that this evaluation is conservative because Service Level D loads (ie: Faulted Pressure + SSE Seismic) are checked against Service Level B allowable.

Section 7.5.3 - Backwash Lines

Longitudinal Stress due to Applied Mechanical Loads

Longitudinal applied mechanical loads, longitudinal stresses due to axial forces & bending moments resulting from applied mechanical loads shall not exceed kxS.

Case 1: Use Service Level D pressure with SSE seismic and Service Level D allowable.

$k := 1.33$	design and service level longitudinal stress factor for Service Level D, per Table 3035-2 of Ref. 9.1
$B_1 := 0.50$	stress index for straight pipe with a DR = 9, per Table 3035-1 of Ref. 9.1
$P_{upset.bw} := 180 \cdot psi$	upset pressure (Ref. 9.13), per Section 6.1.2
$t_{fab.min.bw} = 0.5 in$	pipe wall thickness
$F_a := 1.46 \cdot kip$	axial force at joint 61 due to combined seismic induced forces, per Section 7.7.3
$A_{p.bw} = 6.28 in^2$	cross-sectional area of pipe
$B_2 := 1.0$	stress index for a straight pipe with a DR = 9, per Table 3035-1 of Ref. 9.1
$M := 0.45 \cdot kip \cdot in$	moment at joint 61 due to combined seismic induced forces, per Section 7.7.3

$$Z_{bw} := \pi \cdot \frac{\left[D_{bw}^4 - \left(D_{bw} - 2 \cdot t_{fab.min.bw}\right)^4\right]}{32 \cdot D_{bw}}$$

$Z_{bw} = 5.67 in^3$ section modulus of pipe

$$B_1 \cdot \frac{P_{upset.bw} \cdot D_{bw}}{2 \cdot t_{fab.min.bw}} + 2 \cdot B_1 \cdot \frac{F_a}{A_{p.bw}} + B_2 \cdot \frac{M}{Z_{bw}} = 716.7\,psi$$

longitudinal stress resulting from applied mechanical loads

$k \cdot S_3 = 924.35\,psi$ allowable longitudinal stress

$$k \cdot S_3 \geq B_1 \cdot \frac{P_{D.bw} \cdot D_{bw}}{2 \cdot t_{fab.min.bw}} + 2 \cdot B_1 \cdot \frac{F_a}{A_{bw}} + B_2 \cdot \frac{M}{Z_{bw}}$$

OK

$$\frac{B_1 \cdot \frac{P_{upset.bw} \cdot D_{bw}}{2 \cdot t_{fab.min.bw}} + 2 \cdot B_1 \cdot \frac{F_a}{A_{p.bw}} + B_2 \cdot \frac{M}{Z_{bw}}}{k \cdot S_3} = 0.78 \quad < \quad 1.0$$

OK

Case 2: Use Service Level B pressure with OBE seismic and Service Level B allowable.

$k := 1.1$ — design and service level longitudinal stress factor for Service Level B, per Table 3035-2 of Ref. 9.1

$B_1 := 0.50$ — stress index for straight pipe with a DR = 9, per Table 3035-1 of Ref. 9.1

$P_{upset.bw} := 180 \cdot psi$ — upset pressure (Ref. 9.13), per Section 6.1.2

$t_{fab.min.bw} = 0.5 in$ — pipe wall thickness

$F_a := 0.76 \cdot kip$ — axial force at joint 61 due to combined seismic induced forces, per Section 7.7.3

$A_{p.bw} = 6.28 in^2$ — cross-sectional area of pipe

$B_2 := 1.0$ — stress index for a straight pipe with a DR = 9, per Table 3035-1 of Ref. 9.1

$M := 0.21 \cdot kip \cdot in$ — moment at joint 61 due to combined seismic induced forces, per Section 7.7.3

$$Z_{bw} := \pi \cdot \frac{\left[D_{bw}^4 - \left(D_{bw} - 2 \cdot t_{fab.min.bw}\right)^4\right]}{32 \cdot D_{bw}} \qquad Z_{bw} = 5.67 in^3$$ section modulus of pipe

$$B_1 \cdot \frac{P_{upset.bw} \cdot D_{bw}}{2 \cdot t_{fab.min.bw}} + 2 \cdot B_1 \cdot \frac{F_a}{A_{p.bw}} + B_2 \cdot \frac{M}{Z_{bw}} = 562.98 psi$$ longitudinal stress resulting from applied mechanical loads

$k \cdot S_3 = 764.5 psi$ — allowable longitudinal stress

$$k \cdot S_3 \geq B_1 \cdot \frac{P_{D.bw} \cdot D_{bw}}{2 \cdot t_{fab.min.bw}} + 2 \cdot B_1 \cdot \frac{F_a}{A_{bw}} + B_2 \cdot \frac{M}{Z_{bw}}$$ **OK**

$$\frac{B_1 \cdot \frac{P_{upset.bw} \cdot D_{bw}}{2 \cdot t_{fab.min.bw}} + 2 \cdot B_1 \cdot \frac{F_a}{A_{p.bw}} + B_2 \cdot \frac{M}{Z_{bw}}}{k \cdot S_3} = 0.74 \quad < \quad 1.0$$ **OK**

Section 7.6 - Thermal Analysis

Minimum Temperature

The HDPE material shall not be used at a temperature less than -50 deg F.

Section 7.6.1 - Supply Lines

Thermal Analysis of Fully-Constrained Pipe

Tensile Stress Due to Thermal Contraction

The tensile stress resulting from the fully constrained thermal contraction of the buried pipe when $T_{water} < T_{ground}$ increased by the tensile stress due to axial contraction from Poisson effect, shall not exceed the allowable stress S.

$\alpha := 1.0 \cdot 10^{-4} \cdot \frac{1}{degF}$ — coefficient of thermal expansion, per Ref. 9.15

$T_{water.1s} := 32 \cdot degF$ — minimum water temperature (freezing point)

$T_{ground.1} := 55 \cdot degF$ — conservative winter ground temperature, per Sheet 16 of Ref. 9.28

$\Delta T_{1s} := T_{water.1s} - T_{ground.1}$ — temperature differential between water and ground

$\Delta T_{1s} = -23\,degF$

$P_{D.s} = 165\,psi$ — internal design gage pressure

$\nu := 0.42$ — Poisson's ratio, per Table A-1 of Ref. 9.15

$E_{pipe.thermal} := 28 \cdot ksi$ — modulus of elasticity of pipe at 50 yrs. for 73 degF, per Table 3031-3 (Ref. 9.1)

$$\sigma_{\tau c.1} := \left| E_{pipe.thermal} \cdot \alpha \cdot \Delta T_{1s} - \nu \cdot \frac{P_{D.s} \cdot D}{2 \cdot t_{fab.min.supply}} \right|$$

tensile stress resulting from thermal contraction of pipe

$\sigma_{\tau c.1} = 388.4\,psi \quad < \quad S_1 = 695\,psi$ **OK**

Tensile Stress Due to Thermal Expansion

The tensile stress resulting from the fully constrained thermal expansion of the buried pipe when $T_{water} > T_{ground}$ shall not exceed the allowable stress S.

$T_{water.2s} := 95 \cdot degF$ — maximum water temperature

$T_{ground.2} := 55 \cdot degF$ — conservative ground temperature

$\Delta T_{2s} := T_{water.2s} - T_{ground.2}$ — temperature differential between water & ground

$\Delta T_{2s} = 40\,degF$

$\sigma_{\tau e.1} := E_{pipe.thermal} \cdot \alpha \cdot \Delta T_{2s}$ — tensile stress resulting from thermal expansion of pipe

$\sigma_{\tau e.1} = 112\,psi$

$S_1 = 695\,psi$ — allowable stress for supply line

$\sigma_{\tau e.1} \le S_1$ **OK**

Section 7.6.2 - Return Lines

Thermal Analysis of Fully-Constrained Pipe

Tensile Stress Due to Thermal Contraction

The tensile stress resulting from the fully constrained thermal contraction of the buried pipe when $T_{water} < T_{ground}$ increased by the tensile stress due to axial contraction from Poisson effect, shall not exceed the allowable stress S.

$\alpha = 1 \times 10^{-4} \frac{1}{degF}$ — coefficient of thermal expansion

$T_{water.1r} := 32 \cdot degF$ — min water temperature (freezing point)

$T_{ground.1} = 55\,degF$ — conservative winter ground temperature, per Sheet 16 of Ref. 9.28

$\Delta T_{1r} := T_{water.1r} - T_{ground.1}$ — temperature differential between water and ground

$\Delta T_{1r} = -23\,degF$

$P_{D.r} = 45\,psi$ — internal design gage pressure

$E_{pipe.thermal} = 28\,ksi$ — modulus of elasticity of pipe at 50 yrs. for 73 degF, per Table 3031-3 (Ref. 9.1)

$\sigma_{\tau c.2} := \left| E_{pipe.thermal} \cdot \alpha \cdot \Delta T_{1r} - \nu \cdot \frac{P_{D.r} \cdot D}{2 \cdot t_{fab.min.return}} \right|$ — tensile stress resulting from thermal contraction of pipe

$\sigma_{\tau c.2} = 152.76\,psi$

$S_2 = 340\,psi$ — allowable stress for return line

$\sigma_{\tau c.2} \le S_2$ **OK**

Tensile Stress Due to Thermal Expansion

The tensile stress resulting from the fully constrained thermal expansion of the buried pipe when $T_{water} > T_{ground}$ shall not exceed the allowable stress S.

$T_{water.2r} := 175 \cdot degF$ — maximum water temperature

$T_{ground.2} := 70 \cdot degF$ — summer ground temperature

$\Delta T_{2r} := T_{water.2r} - T_{ground.2}$ — temperature differential between water and ground

$\Delta T_{2r} = 105\,degF$

$\sigma_{\tau e.2} := E_{pipe.thermal} \cdot \alpha \cdot \Delta T_{2r}$ — tensile stress resulting from thermal expansion of pipe

$\sigma_{\tau e.2} = 294\,psi$

$S_2 = 340\,psi$ — allowable stress for return line

$\sigma_{\tau e.2} < S_2$ **OK**

Section 7.6.3 - Backwash Lines

Thermal Analysis of Fully-Constrained Pipe

Tensile Stress Due to Thermal Contraction

The tensile stress resulting from the fully constrained thermal contraction of the buried pipe when $T_{water} < T_{ground}$ increased by the tensile stress due to axial contraction from Poisson effect, shall not exceed the allowable stress S.

$\alpha = 1 \times 10^{-4} \frac{1}{degF}$ — coefficient of thermal expansion

$T_{water.1bw} := 32 \cdot degF$ — min water temperature (freezing point)

$T_{ground.1} = 55\,degF$ — conservative winter ground temperature, per Sheet 16 of Ref. 9.28

$\Delta T_{1bw} := T_{water.1bw} - T_{ground.1}$ — temperature differential between water and ground

$\Delta T_{1bw} = -23\,degF$

$P_{D.bw} = 160\,psi$ — internal design gage pressure

$E_{pipe.thermal} = 28\,ksi$ — modulus of elasticity of pipe at 50 yrs. for 73 degF, per Table 3031-3 (Ref. 9.1)

$\sigma_{\tau c.3} := \left| E_{pipe.thermal} \cdot \alpha \cdot \Delta T_{1bw} - \nu \cdot \frac{P_{D.bw} \cdot D_{bw}}{2 \cdot t_{fab.min.bw}} \right|$ — tensile stress resulting from thermal contraction of pipe

$\sigma_{\tau c.3} = 366.8\,psi$

$S_3 = 695\,psi$ — allowable stress for backwash line

$\sigma_{\tau c.3} \le S_3$ **OK**

Tensile Stress Due to Thermal Expansion

The tensile stress resulting from the fully constrained thermal expansion of the buried pipe when $T_{water} > T_{ground}$ shall not exceed the allowable stress S.

$T_{water.2bw} := 95 \cdot degF$ — maximum water temperature

$T_{ground.2} = 70\,degF$ — summer ground temperature

$\Delta T_{2bw} := T_{water.2bw} - T_{ground.2}$ — temperature differential between water and ground

$\Delta T_{2bw} = 25\,degF$

$\sigma_{\tau e.3} := E_{pipe.thermal} \cdot \alpha \cdot \Delta T_{2bw}$ — tensile stress resulting from thermal expansion of pipe

$\sigma_{\tau e.3} = 70\,psi$

$S_3 = 695\,psi$ — allowable stress for backwash line

$\sigma_{\tau e.3} \le S_3$ **OK**

Section 7.7 - Seismic Analysis

Section 7.7.1 - Supply Lines

Computer modeling efforts have been minimized by modeling the worst case of the 36" diameter pipe lines. Since thermal stress governs, particularly for the Return Line, due to a higher maximum design temperature than the Supply Line (175 °F > 95 °F) and therefore a lower allowable stress, the Train B Return Line is the only 36" diameter pipe line that has been modeled using finite element analysis software (SAP2000).

Additionally, the SAMs for the Supply Lines are the same as for the Return Lines at the Control Building; however, the SAMs for the Supply Lines at the Pumphouse are smaller than for the Return Lines at the Cooling Tower. Therefore, the Return Line SAMs govern (SAMs for the Pumphouse and Cooling Tower are provided in Sections 7.7.3 & 7.7.2).

The maximum IC (interaction coefficient) for the Train B Return Line due to seismic loads is 0.22 << 1.0, per Section 7.7.2. Therefore, since the seismic loads and the routing for all of the 36" diameter pipe lines are very similar and the Return Line seismic stresses are so small, the Supply Line seismic stresses are considered acceptable by comparison.

Section 7.7.2 - Return Lines

Building Seismic Anchor Movements (SAMs)

Building SSE Seismic Anchor Movements in the E-W, N-S, and vertical directions are taken from Table 3.7 of Ref. 9.4. The mass point elevations are conservatively considered at a minimum of EL. 2000'-0". SAMs are analyzed using SAP2000.

SAMs at Control Building

The following Control Building EL. 2000'-0" SAMs are taken from Tables 3.7(B)-7L, 7M, and 7N of Ref. 9.4 and applied at SAP2000 joint number 41A (anchor):

$SAM_{NS} := 0.203 \cdot in$

$SAM_{EW} := 0.185 \cdot in$

$SAM_{V} := 0.013 \cdot in$

SAMs at UHS Cooling Tower

The following UHS Cooling Tower EL. 2008'-6" SAMs are taken from Table 3.7-6A of Ref. 9.42 and applied at SAP2000 joint number 32A (anchor):

$SAM_{NS} := 0.088 \cdot in$

$SAM_{EW} := 0.089 \cdot in$

$SAM_{V} := 0.020 \cdot in$

Strain Effects Due to Free-Field Seismic Wave Propagation

Maximum Axial Ground Strain

The strains from seismic wave passage, and seismically-induced permanent or temporary movements, if any, shall be obtained by site-specific seismological data.

$PGV := 15 \cdot \frac{in}{sec}$ (SSE) peak ground velocity, per Ref. 9.5

$\alpha_\varepsilon := 2$ seismic wave coefficient for shear waves, per Table 3.5-1 of Ref. 9.6

$C_p := 2100 \cdot fps$ compressional wave velocity, per Ref. 9.5

$C_s := 860 \cdot fps$ shear wave velocity, per Ref. 9.5

$\varepsilon_{a_max} := \frac{PGV}{\alpha_\varepsilon \cdot C_s}$ max ground strain induced by wave passage (shear wave)

$\varepsilon_{a_max} = 7.27 \times 10^{-4}$

The portion of the axial ground strain transmitted to the buried pipe is limited by slippage between the pipe and soil, so that the upper bound of the strain transmitted by the soil to the pipe is the following:

$$\varepsilon_{a_soil.pipe} \le \frac{F_{max} \cdot L_w}{4 \cdot E_{sct} \cdot A_p}$$

where,

$\gamma_{soil} = 150\,pcf$ unit weight of soil

$H = 12.5\,ft$ max height of ground cover, per Ref. 9.33

$\phi := 42 \cdot deg$ angle of internal friction of sand, per Table 2.5-51 of Ref. 9.42

$K_o := 1 - \sin(\phi)$ coefficient of soil pressure at rest; agrees with value on Table 2.5-51 of Ref. 9.42

$K_o = 0.33$

$W_w = 272.57 \frac{lbf}{ft}$ weight of water contained within pipe

$W_P = 161.67 \frac{lbf}{ft}$ weight of empty pipe per unit length

$W_{pipe} := W_w + W_P$ — weight of pipe and contents per unit length

$W_{pipe} = 434.24 \frac{lbf}{ft}$

$\sigma_n := \frac{\gamma_{soil} \cdot H \cdot (1 - K_o)}{2} + \frac{W_{pipe}}{\pi \cdot D}$ ... — soil-pipe pressure due to soil and pipe weight

$\sigma_n = 4.68\,psi$

$C_a := 0 \cdot psi$ — soil adhesion for sand

$\Phi_a := 18 \cdot deg$ — apparent angle of pipe wall friction, per Table 5.7 of Ref. 9.19

$F_{max} := \pi \cdot D \cdot (C_a + \sigma_n \cdot \tan(\Phi_a))$ — the max force that can be developed in the pipe before a breakaway between pipe and soil occurs

$F_{max} = 171.84 \frac{lbf}{in}$

$PGA := 0.25 \cdot g$ — peak SSE ground acceleration, per Ref. 9.5

$f_1 := \left(\frac{1}{2 \cdot \pi}\right) \cdot \left(\frac{PGA}{PGV}\right)$ — predominant frequency (SSE), per Section 4.5.1 of Ref. 9.7

$f_1 = 1.02\,Hz$

$L_w := \frac{C_p}{f_1}$ — dominant seismic wave length (SSE), per Section 4.5.1 of Ref. 9.7

$L_w = 2050.52\,ft$

$E_{sct} := 28000 \cdot psi$ — secant modulus of elasticity, per Ref. 9.2

$A_p = 388.86\,in^2$ — cross-sectional area of pipe

$\frac{F_{max} \cdot L_w}{4 \cdot E_{sct} \cdot A_p} = 0.1$ — upper bound of the strain transmitted by the soil to the pipe

Therefore, the maximum strain in the pipe induced by seismic wave passage is:

$\varepsilon_{a_soil.pipe} := \min\left(\frac{PGV}{\alpha_\varepsilon \cdot C_s}, \frac{F_{max} \cdot L_w}{4 \cdot E_{sct} \cdot A_p}\right)$ $\qquad \varepsilon_{a_soil.pipe} = 7.27 \times 10^{-4}$

Maximum Transverse Bending Ground Strain

$PGA := 0.25 \cdot g$ (SSE) peak ground acceleration, per Ref. 9.5

$PGA = 96.52 \frac{in}{sec^2}$

$\alpha_\kappa := 1.0$ seismic wave curvature coefficient for shear waves, per Table 3.5-1 of Ref. 9.6

$C_s = 860 \frac{ft}{sec}$ shear wave velocity

$\varepsilon_b := \frac{PGA}{(\alpha_\kappa \cdot C_s)^2} \cdot \frac{D}{2}$ transverse (bending) strain in the buried pipe induced by seismic wave passage

$\varepsilon_b = 1.63 \times 10^{-5}$

Total Strain

The total strain in the buried pipe induced by seismic wave passage is the sum of the axial strain due to axial wave effects and the axial strain due to transverse (bending) wave effects.

$\varepsilon_{total} := \varepsilon_{a_soil.pipe} + \varepsilon_b$ $\varepsilon_{total} = 7.43 \times 10^{-4}$

$\alpha = 1 \times 10^{-4} \frac{1}{degF}$ coefficient of thermal expansion, per Section 4.5

$\Delta T_{eq.2} := \frac{\varepsilon_{total}}{\alpha}$ the soil strains are converted into an equivalent temperature rise of the buried pipe

$\Delta T_{eq.2} = 7.43 degF$

Combined Seismic Induced Stresses

The combined stresses in the buried PE piping system due to soil strains caused by seismic wave passage and building seismic anchor motion effects are evaluated. The combined stresses shall satisfy the following equation:

$$\frac{i \cdot M_E}{Z} + \frac{F_{aE}}{A} \le 1100 \cdot psi$$ per Ref. 9.1

where,

$i := 1.0$ — stress intensification factor for straight pipe, per Table 3042.2-1 of Ref. 9.1

$Z = 2831.23\,in^3$ — section modulus of the pipe

$A_p = 388.86\,in^2$ — cross-sectional area of the pipe wall

Max Stress at Joint 32 (Frame Element 2 @ 0")

$M_{e.2} := 199.75 \cdot kip \cdot in$ — element local axis 2 (vertical) moment, per Attachment 10.5

$M_{e.3} := -74.91 \cdot kip \cdot in$ — element local axis 3 (transverse) moment, per Attachment 10.5

$P_e := -65.19 \cdot kip$ — element local axis 1 (axial) force, per Attachment 10.5

$M_E := \sqrt{M_{e.2}^2 + M_{e.3}^2}$ — resultant moment due to the combined effects of seismic wave passage and SAMs

$M_E = 213.33\,kip \cdot in$

$F_{aE} := |P_e|$ — resultant force due to the combined effects of seismic wave passage and SAMs

$F_{aE} = 65.19\,kip$

$$\frac{i \cdot M_E}{Z} + \frac{F_{aE}}{A_p} = 243\,psi \quad < \quad 1100\ psi \quad \textbf{OK}$$

$$IC_{seismic} := \frac{\frac{i \cdot M_E}{Z} + \frac{F_{aE}}{A_p}}{1100 \cdot psi} \qquad IC_{seismic} = 0.22 \quad < \quad 1.0 \quad \textbf{OK}$$

Section 7.7.3 - Backwash Lines

Building Seismic Anchor Movement (SAMs)

Load Case 1: SSE Seismic

Building SSE Seismic Anchor Movements in the E-W, N-S, and vertical directions are taken from Table 3.7 of Ref. 9.42. The mass point elevations are conservatively considered at a minimum of EL. 2000'-0". SAMs are analyzed using SAP2000.

SAMs at ESWS Pumphouse

The following ESWS Pumphouse EL. 2000'-0" SAMs are taken from Table 3.7-5A of Ref. 9.42 and applied at SAP2000 joint number 54A (anchor):

$SAM_{NS} := 0.067 \cdot in$

$SAM_{EW} := 0.075 \cdot in$

$SAM_{V} := 0.055 \cdot in$

SAMs at ESW Yard Vaults

ESW Yard Vault Backwash Line Anchors (SAP2000 joint number 61A) are attached to the floor of the vaults. Since the ESW Yard Vaults are not attached to any existing building and are located underground, the relative seismic movements between the ground and the vaults will not be significant. Therefore, SAMs at the ESW Yard Vaults will be insignificant. Nevertheless, ESWS Pumphouse EL. 2000'-0" SAMs are taken from Table 3.7-5A of Ref. 9.42 and applied at SAP2000 joint number 61A (anchor).

$SAM_{NS} := 0.067 \cdot in$

$SAM_{EW} := 0.075 \cdot in$

$SAM_{V} := 0.055 \cdot in$

Load Case 2: OBE Seismic

Building OBE Seismic Anchor Movements in the E-W, N-S, and vertical directions are taken from Table 3.7 of Ref. 9.42. The mass point elevations are conservatively considered at a minimum of EL. 2000'-0". SAMs are analyzed using SAP2000.

SAMs at ESWS Pumphouse

The following ESWS Pumphouse EL. 2000'-0" SAMs are taken from Table 3.7-5B of Ref. 9.42 and applied at SAP2000 joint number 54A (anchor):

$SAM_{NS} := 0.025 \cdot in$

$SAM_{EW} := 0.039 \cdot in$

$SAM_{V} := 0.026 \cdot in$

SAMs at ESW Yard Vaults

ESW Yard Vault Backwash Line Anchors (SAP2000 joint number 61A) are attached to the floor of the vaults. Since the ESW Yard Vaults are not attached to any existing building and are located underground, the relative seismic movements between the ground and the vaults will not be significant. Therefore, SAMs at the ESW Yard Vaults will be insignificant. Nevertheless, ESWS Pumphouse EL. 2000'-0" SAMs are taken from Table 3.7-5B of Ref. 9.42 and applied at SAP2000 joint number 61A (anchor).

$SAM_{NS} := 0.025 \cdot in$

$SAM_{EW} := 0.039 \cdot in$

$SAM_{V} := 0.026 \cdot in$

Strain Effects Due to Free-Field Seismic Wave Propagation

Load Case 1: SSE Seismic

Maximum Axial Ground Strain

The strains from seismic wave passage, and seismically-induced permanent or temporary movements, if any, shall be obtained by site-specific seismological data.

$PGV := 15 \cdot \frac{in}{sec}$ (SSE) peak ground velocity, per Ref. 9.5

$\alpha_\varepsilon := 2$ seismic wave coefficient for shear waves, per Table 3.5-1 of Ref. 9.6

$C_p := 2100 \cdot fps$ compressional wave velocity, per Ref. 9.5

$C_s := 860 \cdot fps$ shear wave velocity, per Ref. 9.5

$\varepsilon_{a_max} := \frac{PGV}{\alpha_\varepsilon \cdot C_s}$ max axial ground strain induced by wave passage

$\varepsilon_{a_max} = 7.27 \times 10^{-4}$

The portion of the axial ground strain transmitted to the buried pipe is limited by slippage between the pipe and soil, so that the upper bound of the strain transmitted by the soil to the pipe is the following:

$$\varepsilon_{a_soil.pipe} \le \frac{F_{max} \cdot L_w}{4 \cdot E_{sct} \cdot A_{bw}}$$

where,

$\gamma_{soil} = 150\,pcf$ unit weight of soil

$H_{bw} = 5.25\,ft$ max height of ground cover, per Ref. 9.33

$K_o := 0.33$ coefficient of soil pressure at rest

$W_{w.bw} = 4.17 \frac{lbf}{ft}$ weight of water contained within the pipe

$W_{P.bw} = 2.61 \frac{lbf}{ft}$ weight of empty pipe per unit length

$W_{pipe.bw} := W_{w.bw} + W_{P.bw}$ weight of pipe and contents per unit length

$W_{pipe.bw} = 6.78 \frac{lbf}{ft}$

$\sigma_{n.3} := \frac{\gamma_{soil} \cdot H_{bw} \cdot (1 - K_o)}{2} + \frac{W_{pipe.bw}}{\pi \cdot D_{bw}}$ ... soil-pipe pressure due to soil and pipe weight

$\sigma_{n.3} = 1.87\,psi$

$C_a = 0\,psi$ soil adhesion for sand

$\Phi_a = 18\,deg$ apparent angle of pipe wall friction, per Table 5.7 of Ref. 9.19

$F_{max.3} := \pi \cdot D_{bw} \cdot (C_a + \sigma_{n.3} \cdot \tan(\Phi_a))$ the max force that can be developed in the pipe before a breakaway between pipe and soil occurs

$F_{max.3} = 8.6 \frac{lbf}{in}$

$f_1 = 1.02\,Hz$ predominant frequency (SSE)

$L_w = 2050.52\,ft$ dominant seismic wave length (SSE), per Section 4.5.1 of Ref. 9.7

$E_{sct} := 28000 \cdot psi$ secant modulus of elasticity, per Ref. 9.2

$A_{p.bw} = 6.28\,in^2$ cross-sectional area of pipe

$\frac{F_{max.3} \cdot L_w}{4 \cdot E_{sct} \cdot A_{p.bw}} = 0.3$ upper bound of the strain transmitted by the soil to the pipe

Therefore, the maximum strain in the pipe induced by SSE seismic wave passage is:

$\varepsilon_{a_soil.pipe} := \min\left(\frac{PGV}{\alpha_\varepsilon \cdot C_s}, \frac{F_{max.3} \cdot L_w}{4 \cdot E_{sct} \cdot A_{p.bw}}\right)$ $\varepsilon_{a_soil.pipe} = 7.27 \times 10^{-4}$

Maximum Transverse Bending Ground Strain

$PGA := 0.25 \cdot g$ (SSE) peak ground acceleration, per Ref. 9.5

$PGA = 96.52 \frac{in}{sec^2}$

$\alpha_\kappa := 1.0$ seismic wave curvature coefficient for shear waves, per Table 3.5-1 of Ref. 9.6

$C_s = 860 \frac{ft}{sec}$ shear wave velocity

$\varepsilon_{b.3} := \frac{PGA}{(\alpha_\kappa \cdot C_s)^2} \cdot \frac{D_{bw}}{2}$ transverse (bending) strain in the buried pipe induced by seismic wave passage

$\varepsilon_{b.3} = 2.04 \times 10^{-6}$

Total Strain

The total strain in the buried pipe induced by seismic wave passage is the sum of the axial strain due to axial wave effects and the axial strain due to transverse (bending) wave effects.

$\varepsilon_{total.3} := \varepsilon_{a_soil.pipe} + \varepsilon_{b.3}$ $\varepsilon_{total.3} = 7.29 \times 10^{-4}$

$\alpha = 1 \times 10^{-4} \frac{1}{degF}$ coefficient of thermal expansion, per Section 4.5

$\Delta T_{eq.3} := \frac{\varepsilon_{total.3}}{\alpha}$ the soil strains are converted into an equivalent temperature rise of the buried pipe

$\Delta T_{eq.3} = 7.29 degF$

Combined Seismic Induced Stresses

The combined stresses in the buried PE piping system due to soil strains caused by seismic wave passage and building seismic anchor motion effects are evaluated. The combined stresses shall satisfy the following equation:

$$\frac{i \cdot M_E}{Z} + \frac{F_{aE}}{A} \le 1100 \cdot psi$$ per Ref. 9.1

where,

$i := 1.0$ — stress intensification factor for straight pipe, per Table 3042.2-1 of Ref. 9.1

$Z_{bw} = 5.67\,in^3$ — section modulus of the pipe

$A_{p.bw} = 6.28\,in^2$ — cross-sectional area of the pipe wall

Max Stress at Joint 61 (Frame Element 101 @ 25.99")

$M_{e.2} := 0.31 \cdot kip \cdot in$ — element local axis 2 (vertical) moment, per Attachment 10.7

$M_{e.3} := -0.32 \cdot kip \cdot in$ — element local axis 3 (transverse) moment, per Attachment 10.7

$P_e := -1.46 \cdot kip$ — element local axis 1 (axial) force, per Attachment 10.7

$M_E := \sqrt{M_{e.2}^2 + M_{e.3}^2}$ — resultant moment due to the combined effects of seismic wave passage and SAMs

$M_E = 0.45\,kip \cdot in$

$F_{aE} := |P_e|$ — resultant force due to the combined effects of seismic wave passage and SAMs

$F_{aE} = 1.46\,kip$

$$\frac{i \cdot M_E}{Z_{bw}} + \frac{F_{aE}}{A_{p.bw}} = 310.91\,psi \quad < \quad 1100\ psi \quad \textbf{OK}$$

$$IC_{seismic} := \frac{\frac{i \cdot M_E}{Z_{bw}} + \frac{F_{aE}}{A_{p.bw}}}{1100 \cdot psi} \qquad IC_{seismic} = 0.28 \quad < \quad 1.0 \quad \textbf{OK}$$

Load Case 2: OBE Seismic

Maximum Axial Ground Strain

The strains from seismic wave passage, and seismically-induced permanent or temporary movements, if any, shall be obtained by site-specific seismological data.

$PGV := 7.8 \cdot \frac{in}{sec}$ (OBE) peak ground velocity, per Ref. 9.5

$\alpha_\varepsilon := 2$ seismic wave coefficient for shear waves, per Table 3.5-1 of Ref. 9.6

$C_p := 2100 \cdot fps$ compressional wave velocity, per Ref. 9.5

$C_s := 860 \cdot fps$ shear wave velocity, per Ref. 9.5

$\varepsilon_{a_max} := \frac{PGV}{\alpha_\varepsilon \cdot C_s}$ max axial ground strain induced by wave passage

$\varepsilon_{a_max} = 3.78 \times 10^{-4}$

The portion of the axial ground strain transmitted to the buried pipe is limited by slippage between the pipe and soil, so that the upper bound of the strain transmitted by the soil to the pipe is the following:

$$\varepsilon_{a_soil.pipe} \le \frac{F_{max} \cdot L_w}{4 \cdot E_{sct} \cdot A_{bw}}$$

where,

$\gamma_{soil} = 150\,pcf$ unit weight of soil

$H_{bw} = 5.25\,ft$ max height of ground cover, per Ref. 9.33

$K_o := 0.33$ coefficient of soil pressure at rest

$W_{w.bw} = 4.17 \frac{lbf}{ft}$ weight of water displaced by pipe; upward resultant force due to buoyancy on a buried pipe in saturated soil

$W_{P.bw} = 2.61 \frac{lbf}{ft}$ weight of empty pipe per unit length

$W_{pipe.bw} := W_{w.bw} + W_{P.bw}$ weight of pipe and contents per unit length

$W_{pipe.bw} = 6.78 \frac{lbf}{ft}$

$\sigma_{n.3} := \frac{\gamma_{soil} \cdot H_{bw} \cdot (1 - K_o)}{2} + \frac{W_{pipe.bw}}{\pi \cdot D_{bw}}$ soil-pipe pressure due to soil weight

$\sigma_{n.3} = 1.87\,psi$

$C_a = 0\,psi$ soil adhesion for sand

$\Phi_a = 18\,deg$ apparent angle of pipe wall friction, per Table 5.7 of Ref. 9.19

$F_{max.3} := \pi \cdot D_{bw} \cdot (C_a + \sigma_{n.3} \cdot \tan(\Phi_a))$ the max force that can be developed in the pipe before a breakaway between pipe and soil occurs

$F_{max.3} = 8.6 \frac{lbf}{in}$

$PGA := 0.13 \cdot g$ (OBE) peak ground acceleration, per Ref. 9.5

$f_1 := \left(\frac{1}{2 \cdot \pi}\right) \cdot \left(\frac{PGA}{PGV}\right)$ predominant frequency (OBE), per Section 4.5.1 of Ref. 9.7

$f_1 = 1.02\,Hz$

$L_w := \frac{C_p}{f_1}$ dominant seismic wave length (OBE), per Section 4.5.1 of Ref. 9.7

$L_w = 2050.52\,ft$

$E_{sct} := 28000 \cdot psi$ secant modulus of elasticity, per Ref. 9.2

$A_{p.bw} = 6.28\,in^2$ cross-sectional area of pipe

$\frac{F_{max.3} \cdot L_w}{4 \cdot E_{sct} \cdot A_{p.bw}} = 0.3$ upper bound of the strain transmitted by the soil to the pipe

Therefore, the maximum strain in the pipe induced by OBE seismic wave passage is:

$\varepsilon_{a_soil.pipe} := \min\left(\frac{PGV}{\alpha_\varepsilon \cdot C_s}, \frac{F_{max.3} \cdot L_w}{4 \cdot E_{sct} \cdot A_{p.bw}}\right)$ $\varepsilon_{a_soil.pipe} = 3.78 \times 10^{-4}$

Maximum Transverse Bending Ground Strain

$PGA := 0.13 \cdot g$ (OBE) peak ground acceleration, per Ref. 9.5

$PGA = 50.19 \frac{in}{sec^2}$

$\alpha_\kappa := 1.0$ seismic wave curvature coefficient for shear waves, per Table 3.5-1 of Ref. 9.6

$C_s = 860 \frac{ft}{sec}$ shear wave velocity

$\varepsilon_{b.3} := \frac{PGA}{(\alpha_\kappa \cdot C_s)^2} \cdot \frac{D_{bw}}{2}$ transverse (bending) strain in the buried pipe induced by seismic wave passage

$\varepsilon_{b.3} = 1.06 \times 10^{-6}$

Total Strain

The total strain in the buried pipe induced by seismic wave passage is the sum of the axial strain due to axial wave effects and the axial strain due to transverse (bending) wave effects.

$\varepsilon_{total.3} := \varepsilon_{a_soil.pipe} + \varepsilon_{b.3}$ $\varepsilon_{total.3} = 3.79 \times 10^{-4}$

$\alpha = 1 \times 10^{-4} \frac{1}{degF}$ coefficient of thermal expansion, per Section 4.5

$\Delta T_{eq.3} := \frac{\varepsilon_{total.3}}{\alpha}$ the soil strains are converted into an equivalent temperature rise of the buried pipe

$\Delta T_{eq.3} = 3.79\, degF$

Combined Seismic Induced Stresses

The combined stresses in the buried PE piping system due to soil strains caused by seismic wave passage and building seismic anchor motion effects are evaluated. The combined stresses shall satisfy the following equation:

$$\frac{i \cdot M_E}{Z} + \frac{F_{aE}}{A} \le 1100 \cdot psi$$ per Ref. 9.1

where,

$i := 1.0$ — stress intensification factor for straight pipe, per Table 3042.2-1 of Ref. 9.1

$Z_{bw} = 5.67\,in^3$ — section modulus of the pipe

$A_{p.bw} = 6.28\,in^2$ — cross-sectional area of the pipe wall

Max Stress at Joint 61 (Frame Element 101 @ 25.99")

$M_{e.2} := 0.11 \cdot kip \cdot in$ — element local axis 2 (vertical) moment, per Attachment 10.7

$M_{e.3} := -0.18 \cdot kip \cdot in$ — element local axis 3 (transverse) moment, per Attachment 10.7

$P_e := -0.76 \cdot kip$ — element local axis 1 (axial) force, per Attachment 10.7

$M_E := \sqrt{M_{e.2}^2 + M_{e.3}^2}$ — resultant moment due to the combined effects of seismic wave passage and SAMs

$M_E = 0.21\,kip \cdot in$

$F_{aE} := |P_e|$ — resultant force due to the combined effects of seismic wave passage and SAMs

$F_{aE} = 0.76\,kip$

$$\frac{i \cdot M_E}{Z_{bw}} + \frac{F_{aE}}{A_{p.bw}} = 158.15\,psi \quad < \quad 1100\ psi \quad \textbf{OK}$$

$$IC_{seismic} := \frac{\frac{i \cdot M_E}{Z_{bw}} + \frac{F_{aE}}{A_{p.bw}}}{1100 \cdot psi} \qquad IC_{seismic} = 0.14 \quad < \quad 1.0 \quad \textbf{OK}$$

Section 7.8 - Pipe Systems Finite Element Analyses

Section 7.8.1 - Train B Return Line (EF-140-AZC-36")

Input Loads

Temperature Loads:

$\Delta T := \max(|\Delta T_{1r}|, |\Delta T_{2r}|)$ — maximum temperature differential between water and ground

$\Delta T = 105\,degF$

$\Delta T_{total.1} := |\Delta T|$ — temperature input load (load case 1)

$\Delta T_{total.1} = 105\,degF$

$T_{water.1r} = 32\,degF$ — $T_{ground.1} = 55\,degF$

$T_{water.2r} = 175\,degF$ — $T_{ground.2} = 70\,degF$

$T_{water} := \max(|T_{water.1r}|, |T_{water.2r}|)$ — $T_{water} = 175\,degF$

$T_{ground} := \min(|T_{ground.1}|, |T_{ground.2}|)$ — $T_{ground} = 55\,degF$

$\Delta T_{avg} := \frac{|T_{water}| + |T_{ground}|}{2}$ — $\Delta T_{avg} = 115\,degF$

$\Delta T_{total.2} := (|\Delta T_{avg}| - |T_{ground}|)$ — temperature input load (load case 2)

$\Delta T_{total.2} = 60\,degF$

$E_{pipe.thermal} = 28000\,psi$ — modulus of elasticity

$\sigma_{t.grad} := E_{pipe.thermal} \cdot \alpha \cdot \frac{|\Delta T|}{2}$ — gradient stress

$\sigma_{t.grad} = 147\,psi$

HDPE Pipe Properties

$D = 36\,in$ — pipe diameter

$D_i := D - 2 \cdot t_{fab.min.return}$ — pipe inner diameter

$D_i = 28.3\,in$

$w_{pipe} = 59.87\,pcf$ — density of pipe material

$\gamma_{water} = 62.4\,pcf$ — water density

$A_p = 388.86\,in^2$ — cross-sectional area of 36" pipe lines corresponding to wall thickness

$W_P := w_{pipe} \cdot A_p$ — weight of empty 36" pipe per unit length

$W_P = 13.47 \frac{lbf}{in}$

$A_{id.p} = 629.02\,in^2$ — cross-sectional area of 36" pipe lines corresponding to inner diameter

$W_w := \gamma_{water} \cdot A_{id.p}$ — weight of water contained within the 36" pipe lines

$W_w = 22.71 \frac{lbf}{in}$

$W_{pipe.water} := \frac{W_P + W_w}{A_p}$ — lumped pipe & water weight density

$W_{pipe.water} = 9.31 \times 10^{-5} \frac{kip}{in^3}$

$\rho_{pipe.water} := \frac{W_{pipe.water}}{g}$ — lumped pipe & water mass density

$\rho_{pipe.water} = 2.41 \times 10^{-7} \frac{kip \cdot sec^2}{in^4}$

$I_{pipe} := \frac{\pi \cdot \left(D^4 - D_i^4\right)}{64}$ moment of inertia of the pipe

$I_{pipe} = 50962.09\,in^4$ moment of inertia

$Z = 2831.23\,in^3$ section modulus

$H = 12.5\,ft$

$\frac{H}{D} = 4.17$

Soil Springs

Soil Properties

$E' = 3000\,psi$

$\gamma_{soil} = 150\,pcf$

Soil Constants

The backfill shall be Class IB or II material as defined by Ref. 9.20.

$\phi = 42\,deg$	soil friction angle for fine grained sand
$\delta := 0.65 \cdot \phi$ $\delta = 27.3\,deg$	avg. friction angle factor for sand
$K_o = 0.33$	coefficient of soil pressure at rest
$N_{qh} := 20$	avg. horizontal bearing capacity factor for sand
$N_{qv} := 3.5$	avg. upward bearing capacity factor for sand
$N_q := 65$	downward bearing capacity factor 1 for sand
$N_\gamma := 80$	downward bearing capacity factor 2 for sand
$L = 1.5$	deflection lag factor for thermal loads
$K = 0.1$	bedding factor

Calculate the horizontal and vertical ovaling loads (Equation B.1a of Ref. 9.7).

$$K_h := \frac{2}{D_i} \cdot \left[\frac{\frac{2}{3} \cdot E_{pipe.thermal} \cdot \left(\frac{1}{DR - 1} \right)^3 + 0.061 \cdot E'}{K \cdot L} \right] \cdot D$$

$K_h = 3647.59\,psi$

$K_v := K_h \qquad K_v = 3647.59\,psi$

Calculate the soil reaction for sand according to Table I-1, I-2 of Appendix A:

Transverse spring:

$f_t := D \cdot \gamma_{soil} \cdot H \cdot N_{qh}$ $\qquad f_t = 9375 \frac{lbf}{in}$

$d_t := \left(H + \frac{D}{2}\right) \cdot (0.06)$ $\qquad d_t = 10.08\,in$

$K_{it} := \frac{f_t}{d_t}$ $\qquad K_{it} = 930.06\,psi$

Axial Spring:

$f_a := \left(\pi \cdot \frac{D}{2}\right) \cdot \gamma_{soil} \cdot H \cdot \left(1 + K_o\right) \cdot \tan(\delta)$ $\qquad f_a = 505.45 \frac{lbf}{in}$

$d_a := 0.15 \cdot in$ $\qquad$ (average)

$K_{ia} := \frac{f_a}{d_a}$ $\qquad K_{ia} = 3369.67\,psi$

Vertical Down Spring:

$f_d := \gamma_{soil} \cdot H \cdot N_q \cdot D + \gamma_{soil} \cdot D^2 \cdot \frac{N_\gamma}{2}$ $\qquad f_d = 34968.75 \frac{lbf}{in}$

$d_d := 0.125 \cdot D$ $\qquad d_d = 4.5\,in$

$K_{id} := \frac{f_d}{d_d}$ $\qquad K_{id} = 7770.83\,psi$

Vertical Up Spring:

$f_u := D \cdot \gamma_{soil} \cdot H \cdot N_{qv}$ $\qquad f_u = 1640.63 \frac{lbf}{in}$

$d_u := 0.01 \cdot H$ $\qquad d_u = 1.5\,in$

$K_{iu} := \frac{f_u}{d_u}$ $\qquad K_{iu} = 1093.75\,psi$

The total vertical soil spring is conservatively taken as the average of the vertical up and down.

$K_{iv} := \frac{K_{id} + K_{iu}}{2}$ $\qquad K_{iv} = 4432.29\,psi$

The final values of the soil springs applied in the computer analysis model depend on the length of the piping sections where they are applied.

$L_{i0.82D} := 0.82 \cdot D$ $\qquad L_{i0.82D} = 29.52\,in$

$L_{i0.89D} := 0.889 \cdot D$ $\qquad L_{i0.89D} = 32\,in$

$L_{i1D} := 1 \cdot D$ $\qquad L_{i1D} = 36\,in$

$L_{i1.32D} := 1.32 \cdot D$ $\qquad L_{i1.32D} = 47.52\,in$

$L_{i1.5D} := 1.5 \cdot D$ $\qquad L_{i1.5D} = 54\,in$

$L_{i1.52D} := 1.52431 \cdot D$ $\qquad L_{i1.52D} = 54.88\,in$

$L_{i1.64D} := 1.64 \cdot D$ $\qquad L_{i1.64D} = 59.04\,in$

$L_{i1.66D} := 1.667 \cdot D$ $\qquad L_{i1.66D} = 60.01\,in$

$L_{i1.69D} := 1.69333 \cdot D$ $\qquad L_{i1.69D} = 60.96\,in$

$L_{i2D} := 2 \cdot D$ $\qquad L_{i2D} = 72\,in$

$L_{i2.11D} := 2.11834 \cdot D$ $\qquad L_{i2.11D} = 76.26\,in$

$L_{i2.50D} := 2.50 \cdot D$ $\qquad L_{i2.50D} = 90\,in$

$L_{i2.59D} := 2.593 \cdot D$ $\qquad L_{i2.59D} = 93.35\,in$

$L_{i2.87D} := 2.87667 \cdot D$ $\qquad L_{i2.87D} = 103.56\,in$

$L_{i3D} := 3 \cdot D$ $\qquad L_{i3D} = 108\,in$

$L_{i3.5D} := 3.5 \cdot D$ $\qquad L_{i3.5D} = 126\,in$

$L_{i4.27D} := 4.27 \cdot D$ $\qquad L_{i4.27D} = 153.72\,in$

$L_{i4.37D} := 4.37667 \cdot D$ $\qquad$ $L_{i4.37D} = 157.56\,in$

$L_{i5D} := 5 \cdot D$ $\qquad$ $L_{i5D} = 180\,in$

$L_{i5.77D} := 5.77 \cdot D$ $\qquad$ $L_{i5.77D} = 207.72\,in$

$L_{i6D} := 6 \cdot D$ $\qquad$ $L_{i6D} = 216\,in$

$L_{i6.54D} := 6.54 \cdot D$ $\qquad$ $L_{i6.54D} = 235.44\,in$

Spring stiffness values are computed below for each of the three orthogonal directions. Values for half of the average spring stiffness are computed and conservatively used in the SAP2000 for the thermal analyses. Values for double of the average spring stiffness are computed and conservatively used in the SAP2000 for the seismic analyses.

Spring Rates - Lateral Direction

$$K_{h.half} := \frac{1}{2} \cdot \frac{K_h \cdot K_{it}}{\left(K_h + K_{it}\right)} \cdot \begin{pmatrix} L_{i0.82D} \\ L_{i0.89D} \\ L_{i1D} \\ L_{i1.32D} \\ L_{i1.5D} \\ L_{i1.52D} \\ L_{i1.64D} \\ L_{i1.66D} \\ L_{i1.69D} \\ L_{i2D} \\ L_{i2.11D} \\ L_{i2.50D} \\ L_{i2.59D} \\ L_{i2.87D} \\ L_{i3D} \\ L_{i3.5D} \\ L_{i4.27D} \\ L_{i4.37D} \\ L_{i5D} \\ L_{i5.77D} \\ L_{i6D} \\ L_{i6.54D} \end{pmatrix}$$

$K_{h.half} =$

	0
0	10.94
1	11.86
2	13.34
3	17.61
4	20.01
5	20.33
6	21.88
7	22.24
8	22.59
9	26.68
10	28.26
11	33.35
12	34.59
13	38.37
14	40.02
15	46.69
16	56.96
17	58.38
18	66.7
19	76.97
20	80.04
21	87.24

$\frac{kip}{in}$

$$K_{h.double} := 2 \cdot \frac{K_h \cdot K_{it}}{\left(K_h + K_{it}\right)} \cdot \begin{pmatrix} L_{i0.82D} \\ L_{i0.89D} \\ L_{i1D} \\ L_{i1.32D} \\ L_{i1.5D} \\ L_{i1.52D} \\ L_{i1.64D} \\ L_{i1.66D} \\ L_{i1.69D} \\ L_{i2D} \\ L_{i2.11D} \\ L_{i2.50D} \\ L_{i2.59D} \\ L_{i2.87D} \\ L_{i3D} \\ L_{i3.5D} \\ L_{i4.27D} \\ L_{i4.37D} \\ L_{i5D} \\ L_{i5.77D} \\ L_{i6D} \\ L_{i6.54D} \end{pmatrix}$$

$K_{h.double} =$

	0
0	43.75
1	47.44
2	53.36
3	70.43
4	80.04
5	81.34
6	87.51
7	88.95
8	90.35
9	106.72
10	113.03
11	133.4
12	138.36
13	153.5
14	160.08
15	186.76
16	227.84
17	233.53
18	266.79
19	307.88
20	320.15
21	348.97

$\frac{kip}{in}$

Spring Rates - Vertical Direction

$$K_{v.half} := \frac{1}{2} \cdot \frac{K_v \cdot K_{iv}}{\left(K_v + K_{iv}\right)} \cdot \begin{pmatrix} L_{i0.82D} \\ L_{i0.89D} \\ L_{i1D} \\ L_{i1.32D} \\ L_{i1.5D} \\ L_{i1.52D} \\ L_{i1.64D} \\ L_{i1.66D} \\ L_{i1.69D} \\ L_{i2D} \\ L_{i2.11D} \\ L_{i2.50D} \\ L_{i2.59D} \\ L_{i2.87D} \\ L_{i3D} \\ L_{i3.5D} \\ L_{i4.27D} \\ L_{i4.37D} \\ L_{i5D} \\ L_{i5.77D} \\ L_{i6D} \\ L_{i6.54D} \end{pmatrix}$$

$K_{v.half} =$

	0
0	29.53
1	32.02
2	36.02
3	47.54
4	54.02
5	54.9
6	59.07
7	60.04
8	60.99
9	72.03
10	76.3
11	90.04
12	93.39
13	103.61
14	108.05
15	126.06
16	153.79
17	157.63
18	180.08
19	207.82
20	216.1
21	235.55

$\frac{kip}{in}$

$$K_{v.double} := 2 \cdot \frac{K_v \cdot K_{iv}}{\left(K_v + K_{iv}\right)} \cdot \begin{pmatrix} L_{i0.82D} \\ L_{i0.89D} \\ L_{i1D} \\ L_{i1.32D} \\ L_{i1.5D} \\ L_{i1.52D} \\ L_{i1.64D} \\ L_{i1.66D} \\ L_{i1.69D} \\ L_{i2D} \\ L_{i2.11D} \\ L_{i2.50D} \\ L_{i2.59D} \\ L_{i2.87D} \\ L_{i3D} \\ L_{i3.5D} \\ L_{i4.27D} \\ L_{i4.37D} \\ L_{i5D} \\ L_{i5.77D} \\ L_{i6D} \\ L_{i6.54D} \end{pmatrix}$$

$K_{v.double} =$

	0
0	118.13
1	128.07
2	144.07
3	190.17
4	216.1
5	219.6
6	236.27
7	240.16
8	243.95
9	288.13
10	305.18
11	360.17
12	373.56
13	414.43
14	432.2
15	504.23
16	615.16
17	630.53
18	720.33
19	831.26
20	864.4
21	942.19

$\frac{kip}{in}$

Spring Rates - Axial Direction

$$K_{a.half} := \frac{1}{2} \cdot K_{ia} \cdot \begin{pmatrix} L_{i0.82D} \\ L_{i0.89D} \\ L_{i1D} \\ L_{i1.32D} \\ L_{i1.5D} \\ L_{i1.52D} \\ L_{i1.64D} \\ L_{i1.66D} \\ L_{i1.69D} \\ L_{i2D} \\ L_{i2.11D} \\ L_{i2.50D} \\ L_{i2.59D} \\ L_{i2.87D} \\ L_{i3D} \\ L_{i3.5D} \\ L_{i4.27D} \\ L_{i4.37D} \\ L_{i5D} \\ L_{i5.77D} \\ L_{i6D} \\ L_{i6.54D} \end{pmatrix}$$

$K_{a.half} =$

	0
0	49.74
1	53.92
2	60.65
3	80.06
4	90.98
5	92.46
6	99.47
7	101.11
8	102.71
9	121.31
10	128.49
11	151.64
12	157.28
13	174.48
14	181.96
15	212.29
16	258.99
17	265.46
18	303.27
19	349.97
20	363.92
21	396.68

$\frac{kip}{in}$

$$K_{a.double} := 2 \cdot K_{ia} \cdot \begin{pmatrix} L_{i0.82D} \\ L_{i0.89D} \\ L_{i1D} \\ L_{i1.32D} \\ L_{i1.5D} \\ L_{i1.52D} \\ L_{i1.64D} \\ L_{i1.66D} \\ L_{i1.69D} \\ L_{i2D} \\ L_{i2.11D} \\ L_{i2.50D} \\ L_{i2.59D} \\ L_{i2.87D} \\ L_{i3D} \\ L_{i3.5D} \\ L_{i4.27D} \\ L_{i4.37D} \\ L_{i5D} \\ L_{i5.77D} \\ L_{i6D} \\ L_{i6.54D} \end{pmatrix}$$

$K_{a.double} =$

	0
0	198.95
1	215.69
2	242.62
3	320.25
4	363.92
5	369.82
6	397.89
7	404.44
8	410.83
9	485.23
10	513.94
11	606.54
12	629.1
13	697.93
14	727.85
15	849.16
16	1035.97
17	1061.85
18	1213.08
19	1399.9
20	1455.7
21	1586.71

$\frac{kip}{in}$

Influence Length

Determine the influence length where the soil springs are applied (Section B.2.5 of Ref. 9.7):

$$\beta := \left(\frac{K_h}{4 \cdot E_{pipe.thermal} \cdot I_{pipe}} \right)^{\frac{1}{4}} \qquad \beta = 0.34\,ft^{-1}$$

$$L_\beta := \frac{3 \cdot \pi}{4 \cdot \beta} \qquad L_\beta = 83.33\,in$$

influence length

FEA Model Layout

Routing Coordinates (Work Point Numbers):

$WPN32_N := 99917 \cdot ft$

$WPN32_E := 99564.31 \cdot ft$

$WPN32_V := 1996.5 \cdot ft$

$WPN33_N := 99903.08 \cdot ft$

$WPN33_E := 99564.31 \cdot ft$

$WPN33_V := 1996.5 \cdot ft$

$WPN34_N := 99903.08 \cdot ft$

$WPN34_E := 99572.76 \cdot ft$

$WPN34_V := 1993 \cdot ft$

$WPN35_N := 99903.08 \cdot ft$

$WPN35_E := 99588.34 \cdot ft$

$WPN35_V := 1993 \cdot ft$

$WPN36_N := 99998.71 \cdot ft$

$WPN36_E := 99683.97 \cdot ft$

$WPN36_V := 1993 \cdot ft$

$WPN37_N := 99998.71 \cdot ft$

$WPN37_E := 99711.68 \cdot ft$

$WPN37_V := 1993 \cdot ft$

$WPN38_N := 100005.37 \cdot ft$

$WPN38_E := 99718.34 \cdot ft$

$WPN38_V := 1993 \cdot ft$

$WPN39_N := 100009.25 \cdot ft$

$WPN39_E := 99722.23 \cdot ft$

$WPN39_V := 1987.50 \cdot ft$

$WPN40_N := 100040.58 \cdot ft$

$WPN40_E := 99753.50 \cdot ft$

$WPN40_V := 1987.50 \cdot ft$

$WPN41_N := 100040.58 \cdot ft$

$WPN41_E := 99788.77 \cdot ft$

$WPN41_V := 1987.50 \cdot ft$

Anchor/Routing Coordinates

Anchor (32A) in UHS Cooling Tower South Vault:

Work point number 32 (Ref. 9.33) corresponds to the centerline of the flange connection. The anchor is North of the flange.

$x_{an.fl} := 2 \cdot ft + 5 \cdot in$ — distance from anchor to flange (work point 32), per Ref. 9.35

$x_{an.fl} = 29\,in$

$N_{32A} := WPN32_N + x_{an.fl}$ — $N_{32A} = 99919.42\,ft$

$E_{32A} := WPN32_E$ — $E_{32A} = 99564.31\,ft$

$V_{32A} := WPN32_V$ — $V_{32A} = 1996.5\,ft$

Joint (32W) at UHS Cooling Tower South Vault Wall (outside face):

$x_{elec.rm.svault} := 13 \cdot ft$ — distance from outside face of south electrical room to inside face of new south vault, per Ref. 9.36

$t_{ct.wall} := 2 \cdot ft$ — wall thickness, per Ref. 9.36

$x_{elec.rm.anchor} := 8 \cdot ft + 10 \cdot in$ — distance from outside face of south electrical room to anchor, per Ref. 9.36

$x_{wp32.wall} := \left(x_{elec.rm.svault} + t_{ct.wall}\right) - \left(x_{elec.rm.anchor} + x_{an.fl}\right)$

$x_{wp32.wall} = 45\,in$ — distance from work point number 32 (flange) to outside face of south vault wall

$N_{32W} := WPN32_N - x_{wp32.wall}$ — $N_{32W} = 99913.25\,ft$

$E_{32W} := WPN32_E$ — $E_{32W} = 99564.31\,ft$

$V_{32W} := WPN32_V$ — $V_{32W} = 1996.5\,ft$

Anchor (41A) in Control Building:

Work point number 41 on Ref. 9.33 corresponds to the Train B Return Line flange location in the Control Building. The anchor is East of the work point number 41 flange location.

$t_{cb.wall} := 3 \cdot ft$ — Control Building wall thickness, per Ref. 9.32 (length of Penetration ES823 minus 8")

$x_{cf.hcc} := 8 \cdot ft + 2.25 \cdot in$ — distance from column line C-F to the first HCC line elbow East of the AZC piping, per Ref. 9.29

$x_{flange.hcc} := 4 \cdot ft + 5 \cdot in$ — distance from AZC/HCC flange connection to the first HCC line elbow East of the AZC piping, per Ref. 9.29

$x_{wall.flange} := x_{cf.hcc} - x_{flange.hcc}$ — distance from column line C-F to the AZC/HCC flange connection

$x_{wall.flange} = 3.77\,ft$

$x_{flange.anchor} := 14 \cdot in$ — distance from the AZC/HCC flange connection to the anchor, per Ref. 9.29

Spring (41W) at Control Building Wall (outside face):

$N_{41W} := WPN41_N$ $\qquad N_{41W} = 100040.58\,ft$

$E_{41W} := WPN41_E - \left(x_{wall.flange} + \frac{t_{cb.wall}}{2}\right)$ $\qquad E_{41W} = 99783.5\,ft$

(Note that centerline of column line C-F is center of the CB west wall, per Ref. 9.41)

$V_{41W} := WPN41_V$ $\qquad V_{41W} = 1987.5\,ft$

Anchor in Control Building:

$N_{41A} := WPN41_N$ $\qquad N_{41A} = 100040.58\,ft$

$E_{41A} := WPN41_E + x_{flange.anchor}$ $\qquad E_{41A} = 99789.94\,ft$

$V_{41A} := WPN41_V$ $\qquad V_{41A} = 1987.5\,ft$

SAP2000 Global Coordinates

North-South Coordinates:

$x_{32A} := N_{32A} - N_{32A}$ $\quad x_{32A} = 0\,in$

$x_{32} := \left|WPN32_N - N_{32A}\right|$ $\quad x_{32} = 29\,in$

$x_{32W} := \left|N_{32W} - N_{32A}\right|$ $\quad x_{32W} = 74\,in$

$x_{33} := \left|WPN33_N - N_{32A}\right|$ $\quad x_{33} = 196.04\,in$

$x_{34} := \left|WPN34_N - N_{32A}\right|$ $\quad x_{34} = 196.04\,in$

$x_{35} := \left|WPN35_N - N_{32A}\right|$ $\quad x_{35} = 196.04\,in$

$x_{36} := N_{32A} - WPN36_N$ $\quad x_{36} = -951.52\,in$

$x_{37} := N_{32A} - WPN37_N$ $\quad x_{37} = -951.52\,in$

$x_{38} := N_{32A} - WPN38_N$ $\quad x_{38} = -1031.44\,in$

$x_{39} := N_{32A} - WPN39_N$ $\quad x_{39} = -1078\,in$

$x_{40} := N_{32A} - WPN40_N$ $\quad x_{40} = -1453.96\,in$

$x_{41W} := N_{32A} - WPN41_N$ $\quad x_{41W} = -1453.96\,in$

$x_{41} := N_{32A} - WPN41_N$ $\quad x_{41} = -1453.96\,in$

$x_{41A} := N_{32A} - N_{41A}$ $\quad x_{41A} = -1453.96\,in$

East-West Coordinates:

$y_{32A} := E_{32A} - E_{32A}$ $\quad y_{32A} = 0\,in$

$y_{32} := WPN32_E - E_{32A}$ $\quad y_{32} = 0\,in$

$y_{32W} := E_{32W} - E_{32A}$ $\quad y_{32W} = 0\,in$

$y_{33} := WPN33_E - E_{32A}$ $\quad y_{33} = 0\,in$

$y_{34} := WPN34_E - E_{32A}$ $\quad y_{34} = 101.4\,in$

$y_{35} := WPN35_E - E_{32A}$ $\quad y_{35} = 288.36\,in$

$y_{36} := WPN36_E - E_{32A}$ $\quad y_{36} = 1435.92\,in$

$y_{37} := WPN37_E - E_{32A}$ $\quad y_{37} = 1768.44\,in$

$y_{38} := WPN38_E - E_{32A}$ $\quad y_{38} = 1848.36\,in$

$y_{39} := WPN39_E - E_{32A}$ $\quad y_{39} = 1895.04\,in$

$y_{40} := WPN40_E - E_{32A}$ $\quad y_{40} = 2270.28\,in$

$y_{41W} := E_{41W} - E_{32A}$ $\quad y_{41W} = 2630.27\,in$

$y_{41} := WPN41_E - E_{32A}$ $\quad y_{41} = 2693.52\,in$

$y_{41A} := E_{41A} - E_{32A}$ $\quad y_{41A} = 2707.52\,in$

Vertical Coordinates:

$z_{grade.v} := 2000 \cdot ft$

$z_{32A} := V_{32A} - z_{grade.v}$ $\quad z_{32A} = -42\,in$

$z_{32} := WPN32_V - z_{grade.v}$ $\quad z_{32} = -42\,in$

$z_{32W} := V_{32W} - z_{grade.v}$ $\quad z_{32W} = -42\,in$

$z_{33} := WPN33_V - z_{grade.v}$ $\quad z_{33} = -42\,in$

$z_{34} := WPN34_V - z_{grade.v}$ $\quad z_{34} = -84\,in$

$z_{35} := WPN35_V - z_{grade.v}$ $\quad z_{35} = -84\,in$

$z_{36} := WPN36_V - z_{grade.v}$ $\quad z_{36} = -84\,in$

$z_{37} := WPN37_V - z_{grade.v}$ $\quad z_{37} = -84\,in$

$z_{38} := WPN38_V - z_{grade.v}$ $\quad z_{38} = -84\,in$

$z_{39} := WPN39_V - z_{grade.v}$ $\quad z_{39} = -150\,in$

$z_{40} := WPN40_V - z_{grade.v}$ $\quad z_{40} = -150\,in$

$z_{41W} := V_{41W} - z_{grade.v}$ $\quad z_{41W} = -150\,in$

$z_{41} := WPN41_V - z_{grade.v}$ $\quad z_{41} = -150\,in$

$z_{41A} := V_{41A} - z_{grade.v}$ $\quad z_{41A} = -150\,in$

Length of piping:

$$L_{rB} := (x_{33} - x_{32}) + \frac{(z_{33} - z_{34})}{\cos\left(\operatorname{atan}\left(\frac{y_{34} - y_{33}}{z_{33} - z_{34}}\right)\right)} + (y_{35} - y_{34}) + \left[(y_{36} - y_{35})\cdot\sqrt{2}\right] + (y_{37} - y_{36}) \ldots$$
$$+ \left[(y_{38} - y_{37})\cdot\sqrt{2}\right] + \left[\frac{(z_{38} - z_{39})}{\cos\left[\operatorname{atan}\left[\frac{(y_{39} - y_{38})\cdot\sqrt{2}}{(z_{38} - z_{39})}\right]\right]}\right] + \left[(y_{40} - y_{39})\cdot\sqrt{2}\right] + (y_{41} - y_{40})$$

$L_{rB} = 298.29\,ft$

Soil Spring Coordinates

Soil spring coordinates between work points 32 & 33:

$S_{32.33.1.x} := x_{32W}$ $\quad S_{32.33.1.x} = 74\,in$

$S_{32.33.1.y} := y_{32W}$ $\quad S_{32.33.1.y} = 0\,in$

$S_{32.33.1.z} := z_{32W}$ $\quad S_{32.33.1.z} = -42\,in$

$S_{32.33.2.x} := S_{32.33.1.x} + 0.39 \cdot L_{i1D}$ $\quad S_{32.33.2.x} = 88.04\,in$

$S_{32.33.2.y} := y_{32}$ $\quad S_{32.33.2.y} = 0\,in$

$S_{32.33.2.z} := z_{32}$ $\quad S_{32.33.2.z} = -42\,in$

$S_{32.33.3.x} := S_{32.33.2.x} + L_{i1D}$ $\quad S_{32.33.3.x} = 124.04\,in$

$S_{32.33.3.y} := y_{32}$ $\quad S_{32.33.3.y} = 0\,in$

$S_{32.33.3.z} := z_{32}$ $\quad S_{32.33.3.z} = -42\,in$

$S_{32.33.4.x} := S_{32.33.3.x} + L_{i1D}$ $\quad S_{32.33.4.x} = 160.04\,in$

$S_{32.33.4.y} := y_{32}$ $\quad S_{32.33.4.y} = 0\,in$

$S_{32.33.4.z} := z_{32}$ $\quad S_{32.33.4.z} = -42\,in$

Soil spring coordinates between work points 33 & 34:

$S_{33.34.1.x} := x_{33}$ $\qquad S_{33.34.1.x} = 196.04\,in$

$S_{33.34.1.y} := y_{33} + (L_{i1D}) \cdot \sin\left[\operatorname{atan}\left[\frac{(y_{34} - y_{33})}{(z_{33} - z_{34})}\right]\right]$ $\qquad S_{33.34.1.y} = 33.26\,in$

$S_{33.34.1.z} := z_{33} - (L_{i1D}) \cdot \cos\left[\operatorname{atan}\left[\frac{(y_{34} - y_{33})}{(z_{33} - z_{34})}\right]\right]$ $\qquad S_{33.34.1.z} = -55.78\,in$

$S_{33.34.2.x} := x_{33}$ $\qquad S_{33.34.2.x} = 196.04\,in$

$S_{33.34.2.y} := S_{33.34.1.y} \cdots + (1.04861 \cdot L_{i1D}) \cdot \sin\left[\operatorname{atan}\left[\frac{(y_{34} - y_{33})}{(z_{33} - z_{34})}\right]\right]$ $\qquad S_{33.34.2.y} = 68.14\,in$

$S_{33.34.2.z} := S_{33.34.1.z} \cdots + (-1.04861 \cdot L_{i1D}) \cdot \cos\left[\operatorname{atan}\left[\frac{(y_{34} - y_{33})}{(z_{33} - z_{34})}\right]\right]$ $\qquad S_{33.34.2.z} = -70.22\,in$

Soil spring coordinates between work points 34 & 35:

$S_{34.35.1.x} := x_{34}$ $\qquad S_{34.35.1.x} = 196.04\,in$

$S_{34.35.1.y} := y_{34} + L_{i1D}$ $\qquad S_{34.35.1.y} = 137.4\,in$

$S_{34.35.1.z} := z_{34}$ $\qquad S_{34.35.1.z} = -84\,in$

$S_{34.35.2.x} := x_{34}$ $\qquad S_{34.35.2.x} = 196.04\,in$

$S_{34.35.2.y} := S_{34.35.1.y} + L_{i1D}$ $\qquad S_{34.35.2.y} = 173.4\,in$

$S_{34.35.2.z} := z_{34}$ $\qquad S_{34.35.2.z} = -84\,in$

$S_{34.35.3.x} := x_{34}$ $\quad S_{34.35.3.x} = 196.04\,in$

$S_{34.35.3.y} := S_{34.35.2.y} + L_{i1D}$ $\quad S_{34.35.3.y} = 209.4\,in$

$S_{34.35.3.z} := z_{34}$ $\quad S_{34.35.3.z} = -84\,in$

$S_{34.35.4.x} := x_{34}$ $\quad S_{34.35.4.x} = 196.04\,in$

$S_{34.35.4.y} := S_{34.35.3.y} + L_{i1D}$ $\quad S_{34.35.4.y} = 245.4\,in$

$S_{34.35.4.z} := z_{34}$ $\quad S_{34.35.4.z} = -84\,in$

Soil spring coordinates between work points 35 & 36:

$S_{35.36.1.x} := x_{35} - \frac{L_{i2D}}{\sqrt{2}}$ $\quad S_{35.36.1.x} = 145.13\,in$

$S_{35.36.1.y} := y_{35} + \frac{L_{i2D}}{\sqrt{2}}$ $\quad S_{35.36.1.y} = 339.27\,in$

$S_{35.36.1.z} := z_{35}$ $\quad S_{35.36.1.z} = -84\,in$

$S_{35.36.2.x} := S_{35.36.1.x} - \frac{L_{i2D}}{\sqrt{2}}$ $\quad S_{35.36.2.x} = 94.22\,in$

$S_{35.36.2.y} := S_{35.36.1.y} + \frac{L_{i2D}}{\sqrt{2}}$ $\quad S_{35.36.2.y} = 390.18\,in$

$S_{35.36.2.z} := z_{35}$ $\quad S_{35.36.2.z} = -84\,in$

$S_{35.36.3.x} := S_{35.36.2.x} - \frac{L_{i2D}}{\sqrt{2}}$ $\quad S_{35.36.3.x} = 43.3\,in$

$S_{35.36.3.y} := S_{35.36.2.y} + \frac{L_{i2D}}{\sqrt{2}}$ $\quad S_{35.36.3.y} = 441.1\,in$

$S_{35.36.3.z} := z_{35}$ $\quad S_{35.36.3.z} = -84\,in$

$S_{35.36.4.x} := S_{35.36.3.x} - \frac{L_{i5D}}{\sqrt{2}}$ $\quad S_{35.36.4.x} = -83.97\,in$

$S_{35.36.4.y} := S_{35.36.3.y} + \frac{L_{i5D}}{\sqrt{2}}$ $\quad S_{35.36.4.y} = 568.37\,in$

$S_{35.36.4.z} := z_{35}$ $\quad S_{35.36.4.z} = -84\,in$

$S_{35.36.5.x} := S_{35.36.4.x} - \frac{L_{i5D}}{\sqrt{2}}$ $\quad S_{35.36.5.x} = -211.25\,in$

$S_{35.36.5.y} := S_{35.36.4.y} + \frac{L_{i5D}}{\sqrt{2}}$ $\quad S_{35.36.5.y} = 695.65\,in$

$S_{35.36.5.z} := z_{35}$ $\quad S_{35.36.5.z} = -84\,in$

$S_{35.36.6.x} := S_{35.36.5.x} - \frac{L_{i5D}}{\sqrt{2}}$ $\quad S_{35.36.6.x} = -338.53\,in$

$S_{35.36.6.y} := S_{35.36.5.y} + \frac{L_{i5D}}{\sqrt{2}}$ $\quad S_{35.36.6.y} = 822.93\,in$

$S_{35.36.6.z} := z_{35}$ $\quad S_{35.36.6.z} = -84\,in$

$S_{35.36.7.x} := S_{35.36.6.x} - \frac{L_{i5D}}{\sqrt{2}}$ $\quad S_{35.36.7.x} = -465.81\,in$

$S_{35.36.7.y} := S_{35.36.6.y} + \frac{L_{i5D}}{\sqrt{2}}$ $\quad S_{35.36.7.y} = 950.21\,in$

$S_{35.36.7.z} := z_{35}$ $\quad S_{35.36.7.z} = -84\,in$

$S_{35.36.8.x} := S_{35.36.7.x} - \frac{L_{i6.54D}}{\sqrt{2}}$ $\quad S_{35.36.8.x} = -632.29\,in$

$S_{35.36.8.y} := S_{35.36.7.y} + \frac{L_{i6.54D}}{\sqrt{2}}$ $\quad S_{35.36.8.y} = 1116.69\,in$

$S_{35.36.8.z} := z_{35}$ $\quad S_{35.36.8.z} = -84\,in$

$S_{35.36.9.x} := S_{35.36.8.x} - \frac{L_{i6.54D}}{\sqrt{2}}$ $\quad S_{35.36.9.x} = -798.77\,in$

$S_{35.36.9.y} := S_{35.36.8.y} + \frac{L_{i6.54D}}{\sqrt{2}}$ $\quad S_{35.36.9.y} = 1283.17\,in$

$S_{35.36.9.z} := z_{35}$ $\quad S_{35.36.9.z} = -84\,in$

$S_{35.36.10.x} := S_{35.36.9.x} - \frac{L_{i2D}}{\sqrt{2}}$ $\quad S_{35.36.10.x} = -849.69\,in$

$S_{35.36.10.y} := S_{35.36.9.y} + \frac{L_{i2D}}{\sqrt{2}}$ $\quad S_{35.36.10.y} = 1334.09\,in$

$S_{35.36.10.z} := z_{35}$ $\quad S_{35.36.10.z} = -84\,in$

$S_{35.36.11.x} := S_{35.36.10.x} - \frac{L_{i2D}}{\sqrt{2}}$ $\quad S_{35.36.11.x} = -900.6\,in$

$S_{35.36.11.y} := S_{35.36.10.y} + \frac{L_{i2D}}{\sqrt{2}}$ $\quad S_{35.36.11.y} = 1385\,in$

$S_{35.36.11.z} := z_{35}$ $\quad S_{35.36.11.z} = -84\,in$

Soil spring coordinates between work points 36 & 37:

$S_{36.37.1.x} := x_{36}$ $\quad S_{36.37.1.x} = -951.52\,in$

$S_{36.37.1.y} := y_{36} + L_{i1D}$ $\quad S_{36.37.1.y} = 1471.92\,in$

$S_{36.37.1.z} := z_{36}$ $\quad S_{36.37.1.z} = -84\,in$

$S_{36.37.2.x} := x_{36}$ $\quad S_{36.37.2.x} = -951.52\,in$

$S_{36.37.2.y} := S_{36.37.1.y} + L_{i1D}$ $\quad S_{36.37.2.y} = 1507.92\,in$

$S_{36.37.2.z} := z_{36}$ $\quad S_{36.37.2.z} = -84\,in$

$S_{36.37.3.x} := x_{36}$ $\quad S_{36.37.3.x} = -951.52\,in$

$S_{36.37.3.y} := S_{36.37.2.y} + L_{i1D}$ $\quad S_{36.37.3.y} = 1543.92\,in$

$S_{36.37.3.z} := z_{36}$ $\quad S_{36.37.3.z} = -84\,in$

$S_{36.37.4.x} := x_{36}$ $\quad S_{36.37.4.x} = -951.52\,in$

$S_{36.37.4.y} := S_{36.37.3.y} + 3.23667 \cdot L_{i1D}$ $\quad S_{36.37.4.y} = 1660.44\,in$

$S_{36.37.4.z} := z_{36}$ $\quad S_{36.37.4.z} = -84\,in$

$S_{36.37.5.x} := x_{36}$ $\quad S_{36.37.5.x} = -951.52\,in$

$S_{36.37.5.y} := S_{36.37.4.y} + L_{i1D}$ $\quad S_{36.37.5.y} = 1696.44\,in$

$S_{36.37.5.z} := z_{36}$ $\quad S_{36.37.5.z} = -84\,in$

$S_{36.37.6.x} := x_{36}$ $\quad S_{36.37.6.x} = -951.52\,in$

$S_{36.37.6.y} := S_{36.37.5.y} + L_{i1D}$ $\quad S_{36.37.6.y} = 1732.44\,in$

$S_{36.37.6.z} := z_{36}$ $\quad S_{36.37.6.z} = -84\,in$

Soil spring coordinates between work points 37 & 38:

$S_{37.38.1.x} := x_{37} - \frac{L_{i1D}}{\sqrt{2}}$ $\qquad S_{37.38.1.x} = -976.98\,in$

$S_{37.38.1.y} := y_{37} + \frac{L_{i1D}}{\sqrt{2}}$ $\qquad S_{37.38.1.y} = 1793.9\,in$

$S_{37.38.1.z} := z_{37}$ $\qquad S_{37.38.1.z} = -84\,in$

$S_{37.38.2.x} := S_{37.38.1.x} - \frac{L_{i1D}}{\sqrt{2}}$ $\qquad S_{37.38.2.x} = -1002.43\,in$

$S_{37.38.2.y} := S_{37.38.1.y} + \frac{L_{i1D}}{\sqrt{2}}$ $\qquad S_{37.38.2.y} = 1819.35\,in$

$S_{37.38.2.z} := z_{37}$ $\qquad S_{37.38.2.z} = -84\,in$

Soil spring coordinates between work points 38 & 39:

$S_{38.39.1.x} := x_{38} - \frac{L_{i1D}}{2}$ $\qquad S_{38.39.1.x} = -1049.44\,in$

$S_{38.39.1.y} := y_{38} + \frac{L_{i1D}}{2}$ $\qquad S_{38.39.1.y} = 1866.36\,in$

$S_{38.39.1.z} := z_{38} - L_{i1D} \cdot \cos\left[\operatorname{atan}\left[\frac{(y_{39} - y_{38})}{(x_{38} - x_{39})}\right]\right]$ $\qquad S_{38.39.1.z} = -109.42\,in$

Soil spring coordinates between work points 39 & 40:

$S_{39.40.1.x} := x_{39} - \frac{L_{i1D}}{\sqrt{2}}$ $\quad S_{39.40.1.x} = -1103.46\,in$

$S_{39.40.1.y} := y_{39} + \frac{L_{i1D}}{\sqrt{2}}$ $\quad S_{39.40.1.y} = 1920.5\,in$

$S_{39.40.1.z} := z_{39}$ $\quad S_{39.40.1.z} = -150\,in$

$S_{39.40.2.x} := S_{39.40.1.x} - \frac{L_{i1D}}{\sqrt{2}}$ $\quad S_{39.40.2.x} = -1128.91\,in$

$S_{39.40.2.y} := S_{39.40.1.y} + \frac{L_{i1D}}{\sqrt{2}}$ $\quad S_{39.40.2.y} = 1945.95\,in$

$S_{39.40.2.z} := z_{39}$ $\quad S_{39.40.2.z} = -150\,in$

$S_{39.40.3.x} := S_{39.40.2.x} - \frac{L_{i1D}}{\sqrt{2}}$ $\quad S_{39.40.3.x} = -1154.37\,in$

$S_{39.40.3.y} := S_{39.40.2.y} + \frac{L_{i1D}}{\sqrt{2}}$ $\quad S_{39.40.3.y} = 1971.41\,in$

$S_{39.40.3.z} := z_{39}$ $\quad S_{39.40.3.z} = -150\,in$

$S_{39.40.4.x} := S_{39.40.3.x} - \frac{4 \cdot L_{i1D}}{\sqrt{2}}$ $\quad S_{39.40.4.x} = -1256.19\,in$

$S_{39.40.4.y} := S_{39.40.3.y} + \frac{4 \cdot L_{i1D}}{\sqrt{2}}$ $\quad S_{39.40.4.y} = 2073.23\,in$

$S_{39.40.4.z} := z_{39}$ $\quad S_{39.40.4.z} = -150\,in$

$S_{39.40.5.x} := S_{39.40.4.x} - \frac{4.75333 \cdot L_{i1D}}{\sqrt{2}}$ $\quad S_{39.40.5.x} = -1377.19\,in$

$S_{39.40.5.y} := S_{39.40.4.y} + \frac{4.75333 \cdot L_{i1D}}{\sqrt{2}}$ $\quad S_{39.40.5.y} = 2194.23\,in$

$S_{39.40.5.z} := z_{39}$ $\quad S_{39.40.5.z} = -150\,in$

$S_{39.40.6.x} := S_{39.40.5.x} - \frac{L_{i1D}}{\sqrt{2}}$ $\quad S_{39.40.6.x} = -1402.65\,in$

$S_{39.40.6.y} := S_{39.40.5.y} + \frac{L_{i1D}}{\sqrt{2}}$ $\quad S_{39.40.6.y} = 2219.69\,in$

$S_{39.40.6.z} := z_{39}$ $\quad S_{39.40.6.z} = -150\,in$

$S_{39.40.7.x} := S_{39.40.6.x} - \frac{L_{i1D}}{\sqrt{2}}$ $\quad S_{39.40.7.x} = -1428.1\,in$

$S_{39.40.7.y} := S_{39.40.6.y} + \frac{L_{i1D}}{\sqrt{2}}$ $\quad S_{39.40.7.y} = 2245.14\,in$

$S_{39.40.7.z} := z_{39}$ $\quad S_{39.40.7.z} = -150\,in$

Soil spring coordinates between work points 40 & 41:

$S_{40.41.1.x} := x_{40}$ $\quad S_{40.41.1.x} = -1453.96\,in$

$S_{40.41.1.y} := y_{40} + L_{i1D}$ $\quad S_{40.41.1.y} = 2306.28\,in$

$S_{40.41.1.z} := z_{40}$ $\quad S_{40.41.1.z} = -150\,in$

$S_{40.41.2.x} := x_{40}$ $\quad S_{40.41.2.x} = -1453.96\,in$

$S_{40.41.2.y} := S_{40.41.1.y} + L_{i1D}$ $\quad S_{40.41.2.y} = 2342.28\,in$

$S_{40.41.2.z} := z_{40}$ $\quad S_{40.41.2.z} = -150\,in$

$S_{40.41.3.x} := x_{40}$ $\quad S_{40.41.3.x} = -1453.96\,in$

$S_{40.41.3.y} := S_{40.41.2.y} + L_{i1D}$ $\quad S_{40.41.3.y} = 2378.28\,in$

$S_{40.41.3.z} := z_{40}$ $\quad S_{40.41.3.z} = -150\,in$

$S_{40.41.4.x} := x_{40}$ $\quad S_{40.41.4.x} = -1453.96\,in$

$S_{40.41.4.y} := S_{40.41.3.y} + 4 \cdot L_{i1D}$ $\quad S_{40.41.4.y} = 2522.28\,in$

$S_{40.41.4.z} := z_{40}$ $\quad S_{40.41.4.z} = -150\,in$

$S_{40.41.5.x} := x_{40}$ $\qquad$ $S_{40.41.5.x} = -1453.96\,in$

$S_{40.41.5.y} := S_{40.41.4.y} + L_{i1D}$ $\qquad$ $S_{40.41.5.y} = 2558.28\,in$

$S_{40.41.5.z} := z_{40}$ $\qquad$ $S_{40.41.5.z} = -150\,in$

$S_{40.41.6.x} := x_{40}$ $\qquad$ $S_{40.41.6.x} = -1453.96\,in$

$S_{40.41.6.y} := S_{40.41.5.y} + L_{i1D}$ $\qquad$ $S_{40.41.6.y} = 2594.28\,in$

$S_{40.41.6.z} := z_{40}$ $\qquad$ $S_{40.41.6.z} = -150\,in$

SAP2000 Output

Load Case 1: 105 degF @ half of the average spring stiffness values:

This load case conservatively considers that the entire pipe line is the same maximum differential temperature across the entire cross-section of the pipe.

- Maximum Temperature (temperature load) = 105 degF

Max stress at Joint 39 (Element 38 @ 57.31"):

$P := -49.86 \cdot kip$	element local axis 1 (axial) force, per Attachment 10.4
$M_2 := 21.23 \cdot kip \cdot in$	element local axis 2 (vertical) moment, per Attachment 10.4
$M_3 := 828.82 \cdot kip \cdot in$	element local axis 3 (transverse) moment, per Attachment 10.4
$M_{c.1} := \sqrt{M_2^2 + M_3^2}$ $M_{c.1} = 829.09\, kip \cdot in$	resultant moment due to the combined effects of seismic wave passage and SAMs
$F_{c.1} := \lvert P \rvert$	resultant force due to the combined effects of seismic wave passage and SAMs
$Z = 2831.23\, in^3$	return line pipe section modulus
$A_p = 388.86\, in^2$	return line pipe wall area
$i := 2.0$	stress intensification factor for mitered elbows, per Table 3042-1 of Ref. 9.1

$$\frac{i \cdot M_{c.1}}{Z} + \frac{F_{c.1}}{A_p} = 713.9\, psi \quad < \quad 1100\ psi \quad \textbf{OK}$$

$$\frac{\frac{i \cdot M_{c.1}}{Z} + \frac{F_{c.1}}{A_p}}{1100 \cdot psi} = 0.65$$

Load Case 2: 60 degF @ half of the average spring stiffness values:

This load case more realistically considers that in the worst case scenario, the outer surface of the pipe line will be the same temperature as the ground temperature and the inner surface of the pipe line will be the same temperature as the water temperature. Since the thickness of the pipe wall is relatively large and HDPE is a poor conductor, the heat energy will take a significant amount of time to transfer in the outward radial direction. Therefore, due to expansion, longitudinal tension along the inner surface of the pipe line and longitudinal compression, due to contraction along the outer surface of the pipe line will result in a thermal gradient stress. The thermal gradient stress is computed by hand and is linearly combined with the stress that is captured by the maximum moment from the SAP2000 output with the load case that considers the temperature load as the difference between the average temperature and the minimum ground temperature.

- Maximum Temperature (temperature load) = 60 degF
- Gradient Stress (temperature load) = 147 psi

Max stress at Joint 39 (Element 38 @ 57.31"):

$P := -28.28 \cdot kip$ — element local axis 1 (axial) force, per Attachment 10.4

$M_2 := 12.60 \cdot kip \cdot in$ — element local axis 2 (vertical) moment, per Attachment 10.4

$M_3 := 476.81 \cdot kip \cdot in$ — element local axis 3 (transverse) moment, per Attachment 10.4

$M_{c.2} := \sqrt{M_2^2 + M_3^2}$ — resultant moment due to the combined effects of seismic wave passage and SAMs

$M_{c.2} = 476.98\, kip \cdot in$

$F_{c.2} := |P|$ — resultant force due to the combined effects of seismic wave passage and SAMs

$i := 2.0$ — stress intensification factor for mitered elbows, per Table 3042-1 of Ref. 9.1

$$\frac{i \cdot M_{c.2}}{Z} + \frac{F_{c.2}}{A_p} + \sigma_{t.grad} = 556.67\, psi \quad < \quad 1100\ psi \quad \textbf{OK}$$

$$\frac{\frac{i \cdot M_{c.2}}{Z} + \frac{F_{c.2}}{A_p} + \sigma_{t.grad}}{1100 \cdot psi} = 0.51$$

Section 7.8.2 - Train B Backwash Line (EF- 006-AZC-4")

Input Loads

Temperature Loads:

$\Delta T := \max(|\Delta T_{1bw}|, |\Delta T_{2bw}|)$ maximum temperature differential between water and ground

$\Delta T = 25\,degF$

$\Delta T_{total.1} := |\Delta T|$ temperature input (load case 1)

$\Delta T_{total.1} = 25\,degF$

$T_{water.1bw} = 32\,degF$ $T_{ground.1} = 55\,degF$

$T_{water.2bw} = 95\,degF$ $T_{ground.2} = 70\,degF$

$T_{water} := \max(|T_{water.1bw}|, |T_{water.2bw}|)$ $T_{water} = 95\,degF$

$T_{ground} := \min(|T_{ground.1}|, |T_{ground.2}|)$ $T_{ground} = 55\,degF$

$\Delta T_{avg} := \dfrac{|T_{water}| + |T_{ground}|}{2}$ $\Delta T_{avg} = 75\,degF$

$\Delta T_{total.2} := (|\Delta T_{avg}| - |T_{ground}|)$ temperature input (load case 2)

$\Delta T_{total.2} = 20\,degF$

$E_{pipe.thermal} = 28000\,psi$ modulus of elasticity

$\sigma_{t.grad.bw} := E_{pipe.thermal} \cdot \alpha \cdot \dfrac{|\Delta T|}{2}$ gradient stress

$\sigma_{t.grad.bw} = 35\,psi$

HDPE Pipe Properties

$D_{bw} = 4.5\,in$ — pipe diameter

$D_{i.bw} := D_{bw} - 2 \cdot t_{fab.min.bw}$ — inner backwash pipe diameter

$D_{i.bw} = 3.5\,in$

$w_{pipe} = 59.87\,pcf$ — density of pipe material

$A_{p.bw} = 6.28\,in^2$ — cross-sectional area of backwash pipe lines corresponding to wall thickness

$W_{P.bw} := w_{pipe} \cdot A_{p.bw}$ — weight of empty 4" pipe per unit length

$W_{P.bw} = 0.22 \frac{lbf}{in}$

$A_{id.p.bw} = 9.62\,in^2$ — cross-sectional area of backwash pipe lines corresponding to inner diameter

$W_{w.bw} := \gamma_{water} \cdot A_{id.p.bw}$ — weight of water contained within the backwash pipe lines

$W_{w.bw} = 0.35 \frac{lbf}{in}$

$W_{pipe.water} := \frac{W_{P.bw} + W_{w.bw}}{A_{p.bw}}$ — lumped pipe & water weight density

$W_{pipe.water} = 8.99 \times 10^{-5} \frac{kip}{in^3}$

$\rho_{pipe.water} := \frac{W_{pipe.water}}{g}$ — lumped pipe & water mass density

$\rho_{pipe.water} = 2.33 \times 10^{-7} \frac{kip \cdot sec^2}{in^4}$

$E_{pipe.thermal} = 28000\,psi$ modulus of elasticity

$I_{pipe.bw} := \frac{\pi \cdot \left(D_{bw}^{4} - D_{i.bw}^{4}\right)}{64}$ moment of inertia of the pipe

$I_{pipe.bw} = 12.76\,in^{4}$ moment of inertia

$Z_{bw} = 5.67\,in^{3}$ section modulus

Soil Springs

Soil Properties

$E' = 3000\,psi$

$\gamma_{soil} = 150\,pcf$

$\frac{H_{bw}}{D_{bw}} = 14$

Soil Constants

The backfill shall be Class IB or II material as defined by Ref. 9.20.

$\phi = 42\,deg$	soil friction angle for fine grained sand
$\delta := 0.65 \cdot \phi$ $\delta = 27.3\,deg$	avg. friction angle factor for sand
$K_o = 0.33$	coefficient of soil pressure at rest
$N_{qh} := 40$	avg. horizontal bearing capacity factor for sand
$N_{qv} := 9$	avg. upward bearing capacity factor for sand
$N_q := 65$	downward bearing capacity factor 1 for sand
$N_\gamma := 80$	downward bearing capacity factor 2 for sand
$L = 1.5$	deflection lag factor for thermal loads
$K = 0.1$	bedding factor

Calculate the horizontal and vertical ovaling loads (Equation B.1a of Ref. 9.7).

$$K_h := \frac{2}{D_{i.bw}} \cdot \left[\frac{\frac{2}{3} \cdot E_{pipe.thermal} \cdot \left(\frac{1}{DR_{bw} - 1} \right)^3 + 0.061 \cdot E'}{K \cdot L} \right] \cdot D_{bw}$$

$K_h = 3762.14\,psi$

$K_v := K_h \qquad K_v = 3762.14\,psi$

Calculate the soil reaction for sand according to Table I-1 of Ref. 9.7:

Transverse spring:

$f_t := D_{bw} \cdot \gamma_{soil} \cdot H \cdot N_{qh}$ $\qquad f_t = 2343.75 \frac{lbf}{in}$

$d_t := \left(H + \frac{D_{bw}}{2}\right) \cdot (0.06)$ $\qquad d_t = 9.13\,in$

$K_{it} := \frac{f_t}{d_t}$ $\qquad K_{it} = 256.57\,psi$

Axial Spring:

$f_a := \left(\pi \cdot \frac{D_{bw}}{2}\right) \cdot \gamma_{soil} \cdot H \cdot (1 + K_o) \cdot \tan(\delta)$ $\qquad f_a = 63.18 \frac{lbf}{in}$

$d_a := 0.15 \cdot in$ $\qquad$ (average)

$K_{ia} := \frac{f_a}{d_a}$ $\qquad K_{ia} = 421.21\,psi$

Vertical Down Spring:

$f_d := \gamma_{soil} \cdot H \cdot N_q \cdot D_{bw} + \gamma_{soil} \cdot D_{bw}^2 \cdot \frac{N_\gamma}{2}$ $\qquad f_d = 3878.91 \frac{lbf}{in}$

$d_d := 0.125 \cdot D_{bw}$ $\qquad d_d = 0.56\,in$

$K_{id} := \frac{f_d}{d_d}$ $\qquad K_{id} = 6895.83\,psi$

Vertical Up Spring:

$f_u := D_{bw} \cdot \gamma_{soil} \cdot H \cdot N_{qv}$ $\qquad f_u = 527.34 \frac{lbf}{in}$

$d_u := 0.01 \cdot H$ $\qquad d_u = 1.5\,in$

$K_{iu} := \frac{f_u}{d_u}$ $\qquad K_{iu} = 351.56\,psi$

The total vertical soil spring is conservatively taken as the average of the vertical up and down.

$K_{iv} := \frac{K_{id} + K_{iu}}{2}$ $\qquad K_{iv} = 3623.7\,psi$

The final values of the soil springs applied in the computer analysis model depend on the length of the piping sections where they are applied.

$L_{i1D} := 1 \cdot D_{bw}$ $\qquad L_{i1D} = 4.5\,in$

$L_{i1.6D} := 1.6 \cdot D_{bw}$ $\qquad L_{i1.6D} = 7.2\,in$

$L_{i2D} := 2 \cdot D_{bw}$ $\qquad L_{i2D} = 9\,in$

$L_{i3D} := 3 \cdot D_{bw}$ $\qquad L_{i3D} = 13.5\,in$

$L_{i3.33D} := 3.33 \cdot D_{bw}$ $\qquad L_{i3.33D} = 14.98\,in$

$L_{i3.95D} := 3.95556 \cdot D_{bw}$ $\qquad L_{i3.95D} = 17.8\,in$

$L_{i5.05D} := 5.0533 \cdot D_{bw}$ $\qquad L_{i5.05D} = 22.74\,in$

$L_{i5.68D} := 5.68444 \cdot D_{bw}$ $\qquad L_{i5.68D} = 25.58\,in$

$L_{i6D} := 6 \cdot D_{bw}$ $\qquad L_{i6D} = 27\,in$

$L_{i7D} := 7 \cdot D_{bw}$ $\qquad L_{i7D} = 31.5\,in$

$L_{i7.33D} := 7.33 \cdot D_{bw}$ $\qquad L_{i7.33D} = 32.98\,in$

$L_{i7.95D} := 7.95556 \cdot D_{bw}$ $\qquad L_{i7.95D} = 35.8\,in$

$L_{i8.68D} := 8.68444 \cdot D_{bw}$ $\qquad L_{i8.68D} = 39.08\,in$

$L_{i9.05D} := 9.0533 \cdot D_{bw}$ $\qquad L_{i9.05D} = 40.74\,in$

$L_{i10D} := 10 \cdot D_{bw}$ $\qquad L_{i10D} = 45\,in$

Spring stiffness values are computed below for each of the three orthogonal directions. Values for half of the average spring stiffness are computed and conservatively used in the SAP2000 for the thermal analyses. Values for double of the average spring stiffness are computed and conservatively used in the SAP2000 for the seismic analyses.

Spring Rates - Lateral Direction

$$K_{h.half.bw} := \frac{1}{2} \cdot \frac{K_h \cdot K_{it}}{\left(K_h + K_{it}\right)} \cdot \begin{pmatrix} L_{i1D} \\ L_{i1.6D} \\ L_{i2D} \\ L_{i3D} \\ L_{i3.33D} \\ L_{i3.95D} \\ L_{i5.05D} \\ L_{i5.68D} \\ L_{i6D} \\ L_{i7D} \\ L_{i7.33D} \\ L_{i7.95D} \\ L_{i8.68D} \\ L_{i9.05D} \\ L_{i10D} \end{pmatrix}$$

$K_{h.half.bw} =$

	0
0	0.54
1	0.86
2	1.08
3	1.62
4	1.8
5	2.14
6	2.73
7	3.07
8	3.24
9	3.78
10	3.96
11	4.3
12	4.69
13	4.89
14	5.4

$\frac{kip}{in}$

$$K_{h.double.bw} := 2 \cdot \frac{K_h \cdot K_{it}}{\left(K_h + K_{it}\right)} \cdot \begin{pmatrix} L_{i1D} \\ L_{i1.6D} \\ L_{i2D} \\ L_{i3D} \\ L_{i3.33D} \\ L_{i3.95D} \\ L_{i5.05D} \\ L_{i5.68D} \\ L_{i6D} \\ L_{i7D} \\ L_{i7.33D} \\ L_{i7.95D} \\ L_{i8.68D} \\ L_{i9.05D} \\ L_{i10D} \end{pmatrix}$$

$K_{h.double.bw} =$

	0
0	2.16
1	3.46
2	4.32
3	6.49
4	7.2
5	8.55
6	10.92
7	12.29
8	12.97
9	15.13
10	15.85
11	17.2
12	18.77
13	19.57
14	21.62

$\frac{kip}{in}$

Spring Rates - Vertical Direction

$$K_{v.half.bw} := \frac{1}{2} \cdot \frac{K_v \cdot K_{iv}}{\left(K_v + K_{iv}\right)} \cdot \begin{pmatrix} L_{i1D} \\ L_{i1.6D} \\ L_{i2D} \\ L_{i3D} \\ L_{i3.33D} \\ L_{i3.95D} \\ L_{i5.05D} \\ L_{i5.68D} \\ L_{i6D} \\ L_{i7D} \\ L_{i7.33D} \\ L_{i7.95D} \\ L_{i8.68D} \\ L_{i9.05D} \\ L_{i10D} \end{pmatrix}$$

$K_{v.half.bw} =$

	0
0	4.15
1	6.64
2	8.31
3	12.46
4	13.83
5	16.43
6	20.99
7	23.61
8	24.92
9	29.07
10	30.44
11	33.04
12	36.07
13	37.6
14	41.53

$\frac{kip}{in}$

$$K_{v.double.bw} := 2 \cdot \frac{K_v \cdot K_{iv}}{\left(K_v + K_{iv}\right)} \cdot \begin{pmatrix} L_{i1D} \\ L_{i1.6D} \\ L_{i2D} \\ L_{i3D} \\ L_{i3.33D} \\ L_{i3.95D} \\ L_{i5.05D} \\ L_{i5.68D} \\ L_{i6D} \\ L_{i7D} \\ L_{i7.33D} \\ L_{i7.95D} \\ L_{i8.68D} \\ L_{i9.05D} \\ L_{i10D} \end{pmatrix}$$

$K_{v.double.bw} =$

	0
0	16.61
1	26.58
2	33.22
3	49.84
4	55.32
5	65.71
6	83.95
7	94.43
8	99.67
9	116.29
10	121.77
11	132.16
12	144.27
13	150.4
14	166.12

$\frac{kip}{in}$

Spring Rates - Axial Direction

$$K_{a.half.bw} := \frac{1}{2} \cdot K_{ia} \cdot \begin{pmatrix} L_{i1D} \\ L_{i1.6D} \\ L_{i2D} \\ L_{i3D} \\ L_{i3.33D} \\ L_{i3.95D} \\ L_{i5.05D} \\ L_{i5.68D} \\ L_{i6D} \\ L_{i7D} \\ L_{i7.33D} \\ L_{i7.95D} \\ L_{i8.68D} \\ L_{i9.05D} \\ L_{i10D} \end{pmatrix}$$

$K_{a.half.bw} =$

	0
0	0.95
1	1.52
2	1.9
3	2.84
4	3.16
5	3.75
6	4.79
7	5.39
8	5.69
9	6.63
10	6.95
11	7.54
12	8.23
13	8.58
14	9.48

$\frac{kip}{in}$

$$K_{a.double.bw} := 2 \cdot K_{ia} \cdot \begin{pmatrix} L_{i1D} \\ L_{i1.6D} \\ L_{i2D} \\ L_{i3D} \\ L_{i3.33D} \\ L_{i3.95D} \\ L_{i5.05D} \\ L_{i5.68D} \\ L_{i6D} \\ L_{i7D} \\ L_{i7.33D} \\ L_{i7.95D} \\ L_{i8.68D} \\ L_{i9.05D} \\ L_{i10D} \end{pmatrix}$$

$K_{a.double.bw} =$

	0
0	3.79
1	6.07
2	7.58
3	11.37
4	12.62
5	15
6	19.16
7	21.55
8	22.75
9	26.54
10	27.79
11	30.16
12	32.92
13	34.32
14	37.91

$\frac{kip}{in}$

Influence Length

Determine the influence length where the soil springs are applied (Section B.2.5 of Ref. 9.7):

$$\beta := \left(\frac{K_h}{4 \cdot E_{pipe.thermal} \cdot I_{pipe.bw}} \right)^{\frac{1}{4}} \qquad \beta = 2.72\,ft^{-1}$$

$$L_\beta := \frac{3 \cdot \pi}{4 \cdot \beta} \qquad L_\beta = 10.4\,in$$

influence length

FEA Model Layout

Routing Coordinates (Work Point Numbers):

$WPN54_N := 100241.29 \cdot ft$

$WPN54_E := 99490.46 \cdot ft$

$WPN54_V := 1996.5 \cdot ft$

$WPN55_N := 100241.29 \cdot ft$

$WPN55_E := 99502.25 \cdot ft$

$WPN55_V := 1996.5 \cdot ft$

$WPN56_N := 100211.25 \cdot ft$

$WPN56_E := 99502.25 \cdot ft$

$WPN56_V := 1996.5 \cdot ft$

$WPN57_N := 100211.25 \cdot ft$

$WPN57_E := 99497 \cdot ft$

$WPN57_V := 1996.5 \cdot ft$

$WPN58_N := 100211.25 \cdot ft$

$WPN58_E := 99495.25 \cdot ft$

$WPN58_V := 1994.75 \cdot ft$

$WPN59_N := 100211.25 \cdot ft$

$WPN59_E := 99462.75 \cdot ft$

$WPN59_V := 1994.75 \cdot ft$

$WPN60_N := 100062.75 \cdot ft$

$WPN60_E := 99462.75 \cdot ft$

$WPN60_V := 1994.75 \cdot ft$

$WPN61_N := 100062.75 \cdot ft$

$WPN61_E := 99439.82 \cdot ft$

$WPN61_V := 1994.75 \cdot ft$

Anchor Coordinates

Anchor (54A) at ESW Pumphouse Vault:

Work point number 54 (Ref. 9.33) on Ref. 9.37 corresponds to the centerline of the flange connection. The anchor is West of the flange.

$$x_{fl.wall.54} := (9 \cdot ft + 6 \cdot in) - \left[(7 \cdot ft + 5 \cdot in) + \left[(10 \cdot ft + 4.125 \cdot in) - \left[(11 \cdot ft + 10 \cdot in) - \frac{1}{2} \cdot (4 \cdot ft + 6 \cdot in) \right] \right] \right]$$

$x_{fl.wall.54} = 15.88\,in$ — distance from flange (work point 54) to inner face of east wall, per Ref. 9.37

$t_{wall.54} := 1 \cdot ft + 6 \cdot in$ — wall thickness, per Ref. 9.40

$x_{an.wall} := 2 \cdot ft + 5.25 \cdot in$ — distance from anchor to inner face of east wall, per Ref. 9.37

$x_{an.fl} := x_{an.wall} - x_{fl.wall.54}$ — distance from anchor to flange (work point 54), per Ref. 9.37

$x_{an.fl} = 13.375\,in$

$N_{54A} := WPN54_N$ — $N_{54A} = 100241.29\,ft$

$E_{54A} := WPN54_E - x_{an.fl}$ — $E_{54A} = 99489.35\,ft$

$V_{54A} := WPN54_V$ — $V_{54A} = 1996.5\,ft$

Anchor (61A) at ESW Train B Yard Vault:

Work point number 61 on Ref. 9.38 corresponds to the centerline of the flange connection. The anchor is West of the flange.

$x_{an.fl} := (2 \cdot ft + 1.5 \cdot in) - (1 \cdot ft + 0.75 \cdot in)$ — distance from anchor to flange, per Ref. 9.38

$x_{an.fl} = 12.75\,in$

$x_{fl.wall.61} := 1 \cdot ft + 6 \cdot in$ — distance from flange (work point 61) to inner face of east wall, per Ref. 9.38

$t_{wall.61} := 8 \cdot in$ — wall thickness, per Ref. 9.38

$N_{61A} := WPN61_N$ — $N_{61A} = 100062.75\,ft$

$E_{61A} := WPN61_E - x_{an.fl}$ — $E_{61A} = 99438.76\,ft$

$V_{61A} := WPN61_V$ — $V_{61A} = 1994.75\,ft$

Y-coordinate of node 606109 (pg. 138) = y_{61} (pg. 121) minus ($x_{fl.wall.61} + t_{wall.61}$)

SAP2000 Global Coordinates

North-South Coordinates:

$x_{54A} := N_{54A} - N_{54A}$ $\quad x_{54A} = 0\,in$

$x_{54} := WPN54_N - N_{54A}$ $\quad x_{54} = 0\,in$

$x_{55} := WPN55_N - N_{54A}$ $\quad x_{55} = 0\,in$

$x_{56} := \left|WPN56_N - N_{54A}\right|$ $\quad x_{56} = 360.48\,in$

$x_{57} := \left|WPN57_N - N_{54A}\right|$ $\quad x_{57} = 360.48\,in$

$x_{58} := \left|WPN58_N - N_{54A}\right|$ $\quad x_{58} = 360.48\,in$

$x_{59} := \left|WPN59_N - N_{54A}\right|$ $\quad x_{59} = 360.48\,in$

$x_{60} := \left|WPN60_N - N_{54A}\right|$ $\quad x_{60} = 2142.48\,in$

$x_{61} := \left|WPN61_N - N_{54A}\right|$ $\quad x_{61} = 2142.48\,in$

$x_{61A} := \left|N_{61A} - N_{54A}\right|$ $\quad x_{61A} = 2142.48\,in$

East-West Coordinates:

$y_{54A} := E_{54A} - E_{54A}$ $\quad y_{54A} = 0\,in$

$y_{54} := WPN54_E - E_{54A}$ $\quad y_{54} = 13.38\,in$

$y_{55} := WPN55_E - E_{54A}$ $\quad y_{55} = 154.85\,in$

$y_{56} := WPN56_E - E_{54A}$ $\quad y_{56} = 154.85\,in$

$y_{57} := WPN57_E - E_{54A}$ $\quad y_{57} = 91.85\,in$

$y_{58} := WPN58_E - E_{54A}$ $\quad y_{58} = 70.85\,in$

$y_{59} := WPN59_E - E_{54A}$ $\quad y_{59} = -319.15\,in$

$y_{60} := WPN60_E - E_{54A}$ $\quad y_{60} = -319.15\,in$

$y_{61} := WPN61_E - E_{54A}$ $\quad y_{61} = -594.3\,in$

$y_{61A} := E_{61A} - E_{54A}$ $\quad y_{61A} = -607.05\,in$

Vertical Coordinates:

$z_{grade.v} := 2000 \cdot ft$

$z_{54A} := V_{54A} - z_{grade.v}$ $\quad z_{54A} = -42\,in$

$z_{54} := WPN54_V - z_{grade.v}$ $\quad z_{54} = -42\,in$

$z_{55} := WPN55_V - z_{grade.v}$ $\quad z_{55} = -42\,in$

$z_{56} := WPN56_V - z_{grade.v}$ $\quad z_{56} = -42\,in$

$z_{57} := WPN57_V - z_{grade.v}$ $\quad z_{57} = -42\,in$

$z_{58} := WPN58_V - z_{grade.v}$ $\quad z_{58} = -63\,in$

$z_{59} := WPN59_V - z_{grade.v}$ $\quad z_{59} = -63\,in$

$z_{60} := WPN60_V - z_{grade.v}$ $\quad z_{60} = -63\,in$

$z_{61} := WPN61_V - z_{grade.v}$ $\quad z_{61} = -63\,in$

$z_{61A} := V_{61A} - z_{grade.v}$ $\quad z_{61A} = -63\,in$

Length of piping:

$$L_{rB} := (y_{55} - y_{54}) + (x_{56} - x_{55}) + (y_{56} - y_{57}) + \sqrt{2} \cdot (y_{57} - y_{58}) + (y_{58} - y_{59}) \ldots + (x_{60} - x_{59}) + |y_{61} - y_{60}|$$

$L_{rB} = 253.48\,ft$

Soil Spring Coordinates

Soil spring coordinates between work points 54 & 55:

$S_{54.55.1.x} := x_{54}$ $\quad S_{54.55.1.x} = 0\,in$

$S_{54.55.1.y} := y_{54} + (x_{fl.wall.54} + t_{wall.54})$ $\quad S_{54.55.1.y} = 47.25\,in$

$S_{54.55.1.z} := z_{54}$ $\quad S_{54.55.1.z} = -42\,in$

$S_{54.55.2.x} := x_{54}$ $\quad S_{54.55.2.x} = 0\,in$

$S_{54.55.2.y} := S_{54.55.1.y} + L_{i2D}$ $\quad S_{54.55.2.y} = 56.25\,in$

$S_{54.55.2.z} := z_{54}$ $\quad S_{54.55.2.z} = -42\,in$

$S_{54.55.3.x} := x_{54}$ $\quad S_{54.55.3.x} = 0\,in$

$S_{54.55.3.y} := S_{54.55.2.y} + L_{i10D}$ $\quad S_{54.55.3.y} = 101.25\,in$

$S_{54.55.3.z} := z_{54}$ $\quad S_{54.55.3.z} = -42\,in$

$S_{54.55.4.x} := x_{54}$ $\quad S_{54.55.4.x} = 0\,in$

$S_{54.55.4.y} := S_{54.55.3.y} + 5.911 \cdot L_{i1D}$ $\quad S_{54.55.4.y} = 127.85\,in$

$S_{54.55.4.z} := z_{54}$ $\quad S_{54.55.4.z} = -42\,in$

$S_{54.55.5.x} := x_{54}$ $\quad S_{54.55.5.x} = 0\,in$

$S_{54.55.5.y} := S_{54.55.4.y} + L_{i2D}$ $\quad S_{54.55.5.y} = 136.85\,in$

$S_{54.55.5.z} := z_{54}$ $\quad S_{54.55.5.z} = -42\,in$

$S_{54.55.6.x} := x_{54}$ $\quad S_{54.55.6.x} = 0\,in$

$S_{54.55.6.y} := S_{54.55.5.y} + L_{i2D}$ $\quad S_{54.55.6.y} = 145.85\,in$

$S_{54.55.6.z} := z_{54}$ $\quad S_{54.55.6.z} = -42\,in$

Soil spring coordinates between work points 55 & 56:

$S_{55.56.1.x} := x_{55} + L_{i2D}$ $\quad S_{55.56.1.x} = 9\,in$

$S_{55.56.1.y} := y_{55}$ $\quad S_{55.56.1.y} = 154.85\,in$

$S_{55.56.1.z} := z_{55}$ $\quad S_{55.56.1.z} = -42\,in$

$S_{55.56.2.x} := S_{55.56.1.x} + L_{i2D}$ $\quad S_{55.56.2.x} = 18\,in$

$S_{55.56.2.y} := y_{55}$ $\quad S_{55.56.2.y} = 154.85\,in$

$S_{55.56.2.z} := z_{55}$ $\quad S_{55.56.2.z} = -42\,in$

$S_{55.56.3.x} := S_{55.56.2.x} + L_{i2D}$ $\quad S_{55.56.3.x} = 27\,in$

$S_{55.56.3.y} := y_{55}$ $\quad S_{55.56.3.y} = 154.85\,in$

$S_{55.56.3.z} := z_{55}$ $\quad S_{55.56.3.z} = -42\,in$

$S_{55.56.4.x} := S_{55.56.3.x} + L_{i10D}$ $\quad S_{55.56.4.x} = 72\,in$

$S_{55.56.4.y} := y_{55}$ $\quad S_{55.56.4.y} = 154.85\,in$

$S_{55.56.4.z} := z_{55}$ $\quad S_{55.56.4.z} = -42\,in$

$S_{55.56.5.x} := S_{55.56.4.x} + L_{i10D}$ $\quad S_{55.56.5.x} = 117\,in$

$S_{55.56.5.y} := y_{55}$ $\quad S_{55.56.5.y} = 154.85\,in$

$S_{55.56.5.z} := z_{55}$ $\quad S_{55.56.5.z} = -42\,in$

$S_{55.56.6.x} := S_{55.56.5.x} + L_{i10D}$ $\quad S_{55.56.6.x} = 162\,in$

$S_{55.56.6.y} := y_{55}$ $\quad S_{55.56.6.y} = 154.85\,in$

$S_{55.56.6.z} := z_{55}$ $\quad S_{55.56.6.z} = -42\,in$

$S_{55.56.7.x} := S_{55.56.6.x} + L_{i10D}$ $S_{55.56.7.x} = 207\,in$

$S_{55.56.7.y} := y_{55}$ $S_{55.56.7.y} = 154.85\,in$

$S_{55.56.7.z} := z_{55}$ $S_{55.56.7.z} = -42\,in$

$S_{55.56.8.x} := S_{55.56.7.x} + L_{i10D}$ $S_{55.56.8.x} = 252\,in$

$S_{55.56.8.y} := y_{55}$ $S_{55.56.8.y} = 154.85\,in$

$S_{55.56.8.z} := z_{55}$ $S_{55.56.8.z} = -42\,in$

$S_{55.56.9.x} := S_{55.56.8.x} + L_{i10D}$ $S_{55.56.9.x} = 297\,in$

$S_{55.56.9.y} := y_{55}$ $S_{55.56.9.y} = 154.85\,in$

$S_{55.56.9.z} := z_{55}$ $S_{55.56.9.z} = -42\,in$

$S_{55.56.10.x} := S_{55.56.9.x} + 8.10667 \cdot L_{i1D}$ $S_{55.56.10.x} = 333.48\,in$

$S_{55.56.10.y} := y_{55}$ $S_{55.56.10.y} = 154.85\,in$

$S_{55.56.10.z} := z_{55}$ $S_{55.56.10.z} = -42\,in$

$S_{55.56.11.x} := S_{55.56.10.x} + L_{i2D}$ $S_{55.56.11.x} = 342.48\,in$

$S_{55.56.11.y} := y_{55}$ $S_{55.56.11.y} = 154.85\,in$

$S_{55.56.11.z} := z_{55}$ $S_{55.56.11.z} = -42\,in$

$S_{55.56.12.x} := S_{55.56.11.x} + L_{i2D}$ $S_{55.56.12.x} = 351.48\,in$

$S_{55.56.12.y} := y_{55}$ $S_{55.56.12.y} = 154.85\,in$

$S_{55.56.12.z} := z_{55}$ $S_{55.56.12.z} = -42\,in$

Soil spring coordinates between work points 56 & 57:

$S_{56.57.1.x} := x_{56}$ $\quad S_{56.57.1.x} = 360.48\,in$

$S_{56.57.1.y} := y_{56} - L_{i2D}$ $\quad S_{56.57.1.y} = 145.85\,in$

$S_{56.57.1.z} := z_{56}$ $\quad S_{56.57.1.z} = -42\,in$

$S_{56.57.2.x} := x_{56}$ $\quad S_{56.57.2.x} = 360.48\,in$

$S_{56.57.2.y} := S_{56.57.1.y} - L_{i2D}$ $\quad S_{56.57.2.y} = 136.85\,in$

$S_{56.57.2.z} := z_{56}$ $\quad S_{56.57.2.z} = -42\,in$

$S_{56.57.3.x} := x_{56}$ $\quad S_{56.57.3.x} = 360.48\,in$

$S_{56.57.3.y} := S_{56.57.2.y} - L_{i2D}$ $\quad S_{56.57.3.y} = 127.85\,in$

$S_{56.57.3.z} := z_{56}$ $\quad S_{56.57.3.z} = -42\,in$

$S_{56.57.4.x} := x_{56}$ $\quad S_{56.57.4.x} = 360.48\,in$

$S_{56.57.4.y} := S_{56.57.3.y} - L_{i2D}$ $\quad S_{56.57.4.y} = 118.85\,in$

$S_{56.57.4.z} := z_{56}$ $\quad S_{56.57.4.z} = -42\,in$

$S_{56.57.5.x} := x_{56}$ $\quad S_{56.57.5.x} = 360.48\,in$

$S_{56.57.5.y} := S_{56.57.4.y} - L_{i2D}$ $\quad S_{56.57.5.y} = 109.85\,in$

$S_{56.57.5.z} := z_{56}$ $\quad S_{56.57.5.z} = -42\,in$

$S_{56.57.6.x} := x_{56}$ $\quad S_{56.57.6.x} = 360.48\,in$

$S_{56.57.6.y} := S_{56.57.5.y} - L_{i2D}$ $\quad S_{56.57.6.y} = 100.85\,in$

$S_{56.57.6.z} := z_{56}$ $\quad S_{56.57.6.z} = -42\,in$

Soil spring coordinates between work points 57 & 58:

$S_{57.58.1.x} := x_{57}$ $\qquad S_{57.58.1.x} = 360.48\,in$

$S_{57.58.1.y} := y_{57} - \frac{L_{i2D}}{\sqrt{2}}$ $\qquad S_{57.58.1.y} = 85.49\,in$

$S_{57.58.1.z} := z_{57} - \frac{L_{i2D}}{\sqrt{2}}$ $\qquad S_{57.58.1.z} = -48.36\,in$

$S_{57.58.2.x} := x_{57}$ $\qquad S_{57.58.2.x} = 360.48\,in$

$S_{57.58.2.y} := S_{57.58.1.y} - \frac{L_{i2D}}{\sqrt{2}}$ $\qquad S_{57.58.2.y} = 79.13\,in$

$S_{57.58.2.z} := S_{57.58.1.z} - \frac{L_{i2D}}{\sqrt{2}}$ $\qquad S_{57.58.2.z} = -54.73\,in$

$S_{57.58.3.x} := x_{57}$ $\qquad S_{57.58.3.x} = 360.48\,in$

$S_{57.58.3.y} := S_{57.58.2.y} - \frac{L_{i2D}}{\sqrt{2}}$ $\qquad S_{57.58.3.y} = 72.76\,in$

$S_{57.58.3.z} := S_{57.58.2.z} - \frac{L_{i2D}}{\sqrt{2}}$ $\qquad S_{57.58.3.z} = -61.09\,in$

Soil spring coordinates between work points 58 & 59:

$S_{58.59.1.x} := x_{58}$ $\qquad S_{58.59.1.x} = 360.48\,in$

$S_{58.59.1.y} := y_{58} - L_{i2D}$ $\qquad S_{58.59.1.y} = 61.85\,in$

$S_{58.59.1.z} := z_{58}$ $\qquad S_{58.59.1.z} = -63\,in$

$S_{58.59.2.x} := x_{58}$ $\qquad S_{58.59.2.x} = 360.48\,in$

$S_{58.59.2.y} := S_{58.59.1.y} - L_{i2D}$ $\qquad S_{58.59.2.y} = 52.85\,in$

$S_{58.59.2.z} := z_{58}$ $\qquad S_{58.59.2.z} = -63\,in$

$S_{58.59.3.x} := x_{58}$ $\quad S_{58.59.3.x} = 360.48\,in$

$S_{58.59.3.y} := S_{58.59.2.y} - L_{i2D}$ $\quad S_{58.59.3.y} = 43.85\,in$

$S_{58.59.3.z} := z_{58}$ $\quad S_{58.59.3.z} = -63\,in$

$S_{58.59.4.x} := x_{58}$ $\quad S_{58.59.4.x} = 360.48\,in$

$S_{58.59.4.y} := S_{58.59.3.y} - L_{i10D}$ $\quad S_{58.59.4.y} = -1.15\,in$

$S_{58.59.4.z} := z_{58}$ $\quad S_{58.59.4.z} = -63\,in$

$S_{58.59.5.x} := x_{58}$ $\quad S_{58.59.5.x} = 360.48\,in$

$S_{58.59.5.y} := S_{58.59.4.y} - L_{i10D}$ $\quad S_{58.59.5.y} = -46.15\,in$

$S_{58.59.5.z} := z_{58}$ $\quad S_{58.59.5.z} = -63\,in$

$S_{58.59.6.x} := x_{58}$ $\quad S_{58.59.6.x} = 360.48\,in$

$S_{58.59.6.y} := S_{58.59.5.y} - L_{i10D}$ $\quad S_{58.59.6.y} = -91.15\,in$

$S_{58.59.6.z} := z_{58}$ $\quad S_{58.59.6.z} = -63\,in$

$S_{58.59.7.x} := x_{58}$ $\quad S_{58.59.7.x} = 360.48\,in$

$S_{58.59.7.y} := S_{58.59.6.y} - L_{i10D}$ $\quad S_{58.59.7.y} = -136.15\,in$

$S_{58.59.7.z} := z_{58}$ $\quad S_{58.59.7.z} = -63\,in$

$S_{58.59.8.x} := x_{58}$ $\quad S_{58.59.8.x} = 360.48\,in$

$S_{58.59.8.y} := S_{58.59.7.y} - L_{i10D}$ $\quad S_{58.59.8.y} = -181.15\,in$

$S_{58.59.8.z} := z_{58}$ $\quad S_{58.59.8.z} = -63\,in$

$S_{58.59.9.x} := x_{58}$ $\quad S_{58.59.9.x} = 360.48\,in$

$S_{58.59.9.y} := S_{58.59.8.y} - L_{i10D}$ $\quad S_{58.59.9.y} = -226.15\,in$

$S_{58.59.9.z} := z_{58}$ $\quad S_{58.59.9.z} = -63\,in$

$S_{58.59.10.x} := x_{58}$ $\quad S_{58.59.10.x} = 360.48\,in$

$S_{58.59.10.y} := S_{58.59.9.y} - L_{i10D}$ $\quad S_{58.59.10.y} = -271.15\,in$

$S_{58.59.10.z} := z_{58}$ $\quad S_{58.59.10.z} = -63\,in$

$S_{58.59.11.x} := x_{58}$ $\quad S_{58.59.11.x} = 360.48\,in$

$S_{58.59.11.y} := S_{58.59.10.y} - 4.6667 \cdot L_{i1D}$ $\quad S_{58.59.11.y} = -292.15\,in$

$S_{58.59.11.z} := z_{58}$ $\quad S_{58.59.11.z} = -63\,in$

$S_{58.59.12.x} := x_{58}$ $\quad S_{58.59.12.x} = 360.48\,in$

$S_{58.59.12.y} := S_{58.59.11.y} - L_{i2D}$ $\quad S_{58.59.12.y} = -301.15\,in$

$S_{58.59.12.z} := z_{58}$ $\quad S_{58.59.12.z} = -63\,in$

$S_{58.59.13.x} := x_{58}$ $\quad S_{58.59.13.x} = 360.48\,in$

$S_{58.59.13.y} := S_{58.59.12.y} - L_{i2D}$ $\quad S_{58.59.13.y} = -310.15\,in$

$S_{58.59.13.z} := z_{58}$ $\quad S_{58.59.13.z} = -63\,in$

Soil spring coordinates between work points 59 & 60:

$S_{59.60.1.x} := x_{59} + L_{i2D}$ $\quad S_{59.60.1.x} = 369.48\,in$

$S_{59.60.1.y} := y_{59}$ $\quad S_{59.60.1.y} = -319.15\,in$

$S_{59.60.1.z} := z_{59}$ $\quad S_{59.60.1.z} = -63\,in$

$S_{59.60.2.x} := S_{59.60.1.x} + L_{i2D}$ $\quad S_{59.60.2.x} = 378.48\,in$

$S_{59.60.2.y} := y_{59}$ $\quad S_{59.60.2.y} = -319.15\,in$

$S_{59.60.2.z} := z_{59}$ $\quad S_{59.60.2.z} = -63\,in$

$S_{59.60.3.x} := S_{59.60.2.x} + L_{i2D}$ $\quad S_{59.60.3.x} = 387.48\,in$

$S_{59.60.3.y} := y_{59}$ $\quad S_{59.60.3.y} = -319.15\,in$

$S_{59.60.3.z} := z_{59}$ $\quad S_{59.60.3.z} = -63\,in$

$S_{59.60.4.x} := S_{59.60.3.x} + L_{i10D}$ $\quad S_{59.60.4.x} = 432.48\,in$

$S_{59.60.4.y} := y_{59}$ $\quad S_{59.60.4.y} = -319.15\,in$

$S_{59.60.4.z} := z_{59}$ $\quad S_{59.60.4.z} = -63\,in$

$S_{59.60.5.x} := S_{59.60.4.x} + L_{i10D}$ $\quad S_{59.60.5.x} = 477.48\,in$

$S_{59.60.5.y} := y_{59}$ $\quad S_{59.60.5.y} = -319.15\,in$

$S_{59.60.5.z} := z_{59}$ $\quad S_{59.60.5.z} = -63\,in$

$S_{59.60.6.x} := S_{59.60.5.x} + L_{i10D}$ $\quad S_{59.60.6.x} = 522.48\,in$

$S_{59.60.6.y} := y_{59}$ $\quad S_{59.60.6.y} = -319.15\,in$

$S_{59.60.6.z} := z_{59}$ $\quad S_{59.60.6.z} = -63\,in$

$S_{59.60.7.x} := S_{59.60.6.x} + L_{i10D}$ $\quad S_{59.60.7.x} = 567.48\,in$

$S_{59.60.7.y} := y_{59}$ $\quad S_{59.60.7.y} = -319.15\,in$

$S_{59.60.7.z} := z_{59}$ $\quad S_{59.60.7.z} = -63\,in$

$S_{59.60.8.x} := S_{59.60.7.x} + L_{i10D}$ $\quad S_{59.60.8.x} = 612.48\,in$

$S_{59.60.8.y} := y_{59}$ $\quad S_{59.60.8.y} = -319.15\,in$

$S_{59.60.8.z} := z_{59}$ $\quad S_{59.60.8.z} = -63\,in$

$S_{59.60.9.x} := S_{59.60.8.x} + L_{i10D}$ $\quad S_{59.60.9.x} = 657.48\,in$

$S_{59.60.9.y} := y_{59}$ $\quad S_{59.60.9.y} = -319.15\,in$

$S_{59.60.9.z} := z_{59}$ $\quad S_{59.60.9.z} = -63\,in$

$S_{59.60.10.x} := S_{59.60.9.x} + L_{i10D}$ $\quad S_{59.60.10.x} = 702.48\,in$

$S_{59.60.10.y} := y_{59}$ $\quad S_{59.60.10.y} = -319.15\,in$

$S_{59.60.10.z} := z_{59}$ $\quad S_{59.60.10.z} = -63\,in$

$S_{59.60.11.x} := S_{59.60.10.x} + L_{i10D}$ $\quad S_{59.60.11.x} = 747.48\,in$

$S_{59.60.11.y} := y_{59}$ $\quad S_{59.60.11.y} = -319.15\,in$

$S_{59.60.11.z} := z_{59}$ $\quad S_{59.60.11.z} = -63\,in$

$S_{59.60.12.x} := S_{59.60.11.x} + L_{i10D}$ $\quad S_{59.60.12.x} = 792.48\,in$

$S_{59.60.12.y} := y_{59}$ $\quad S_{59.60.12.y} = -319.15\,in$

$S_{59.60.12.z} := z_{59}$ $\quad S_{59.60.12.z} = -63\,in$

$S_{59.60.13.x} := S_{59.60.12.x} + L_{i10D}$ $\quad S_{59.60.13.x} = 837.48\,in$

$S_{59.60.13.y} := y_{59}$ $\quad S_{59.60.13.y} = -319.15\,in$

$S_{59.60.13.z} := z_{59}$ $\quad S_{59.60.13.z} = -63\,in$

$S_{59.60.14.x} := S_{59.60.13.x} + L_{i10D}$ $\quad S_{59.60.14.x} = 882.48\,in$

$S_{59.60.14.y} := y_{59}$ $\quad S_{59.60.14.y} = -319.15\,in$

$S_{59.60.14.z} := z_{59}$ $\quad S_{59.60.14.z} = -63\,in$

$S_{59.60.15.x} := S_{59.60.14.x} + L_{i10D}$ $\quad S_{59.60.15.x} = 927.48\,in$

$S_{59.60.15.y} := y_{59}$ $\quad S_{59.60.15.y} = -319.15\,in$

$S_{59.60.15.z} := z_{59}$ $\quad S_{59.60.15.z} = -63\,in$

$S_{59.60.16.x} := S_{59.60.15.x} + L_{i10D}$ $\quad S_{59.60.16.x} = 972.48\,in$

$S_{59.60.16.y} := y_{59}$ $\quad S_{59.60.16.y} = -319.15\,in$

$S_{59.60.16.z} := z_{59}$ $\quad S_{59.60.16.z} = -63\,in$

$S_{59.60.17.x} := S_{59.60.16.x} + L_{i10D}$ $\quad S_{59.60.17.x} = 1017.48\,in$

$S_{59.60.17.y} := y_{59}$ $\quad S_{59.60.17.y} = -319.15\,in$

$S_{59.60.17.z} := z_{59}$ $\quad S_{59.60.17.z} = -63\,in$

$S_{59.60.18.x} := S_{59.60.17.x} + L_{i10D}$ $\quad S_{59.60.18.x} = 1062.48\,in$

$S_{59.60.18.y} := y_{59}$ $\quad S_{59.60.18.y} = -319.15\,in$

$S_{59.60.18.z} := z_{59}$ $\quad S_{59.60.18.z} = -63\,in$

$S_{59.60.19.x} := S_{59.60.18.x} + L_{i10D}$ $S_{59.60.19.x} = 1107.48\,in$

$S_{59.60.19.y} := y_{59}$ $S_{59.60.19.y} = -319.15\,in$

$S_{59.60.19.z} := z_{59}$ $S_{59.60.19.z} = -63\,in$

$S_{59.60.20.x} := S_{59.60.19.x} + L_{i10D}$ $S_{59.60.20.x} = 1152.48\,in$

$S_{59.60.20.y} := y_{59}$ $S_{59.60.20.y} = -319.15\,in$

$S_{59.60.20.z} := z_{59}$ $S_{59.60.20.z} = -63\,in$

$S_{59.60.21.x} := S_{59.60.20.x} + L_{i10D}$ $S_{59.60.21.x} = 1197.48\,in$

$S_{59.60.21.y} := y_{59}$ $S_{59.60.21.y} = -319.15\,in$

$S_{59.60.21.z} := z_{59}$ $S_{59.60.21.z} = -63\,in$

$S_{59.60.22.x} := S_{59.60.21.x} + L_{i10D}$ $S_{59.60.22.x} = 1242.48\,in$

$S_{59.60.22.y} := y_{59}$ $S_{59.60.22.y} = -319.15\,in$

$S_{59.60.22.z} := z_{59}$ $S_{59.60.22.z} = -63\,in$

$S_{59.60.23.x} := S_{59.60.22.x} + L_{i10D}$ $S_{59.60.23.x} = 1287.48\,in$

$S_{59.60.23.y} := y_{59}$ $S_{59.60.23.y} = -319.15\,in$

$S_{59.60.23.z} := z_{59}$ $S_{59.60.23.z} = -63\,in$

$S_{59.60.24.x} := S_{59.60.23.x} + L_{i10D}$ $S_{59.60.24.x} = 1332.48\,in$

$S_{59.60.24.y} := y_{59}$ $S_{59.60.24.y} = -319.15\,in$

$S_{59.60.24.z} := z_{59}$ $S_{59.60.24.z} = -63\,in$

$S_{59.60.25.x} := S_{59.60.24.x} + L_{i10D}$ $\quad S_{59.60.25.x} = 1377.48\,in$

$S_{59.60.25.y} := y_{59}$ $\quad S_{59.60.25.y} = -319.15\,in$

$S_{59.60.25.z} := z_{59}$ $\quad S_{59.60.25.z} = -63\,in$

$S_{59.60.26.x} := S_{59.60.25.x} + L_{i10D}$ $\quad S_{59.60.26.x} = 1422.48\,in$

$S_{59.60.26.y} := y_{59}$ $\quad S_{59.60.26.y} = -319.15\,in$

$S_{59.60.26.z} := z_{59}$ $\quad S_{59.60.26.z} = -63\,in$

$S_{59.60.27.x} := S_{59.60.26.x} + L_{i10D}$ $\quad S_{59.60.27.x} = 1467.48\,in$

$S_{59.60.27.y} := y_{59}$ $\quad S_{59.60.27.y} = -319.15\,in$

$S_{59.60.27.z} := z_{59}$ $\quad S_{59.60.27.z} = -63\,in$

$S_{59.60.28.x} := S_{59.60.27.x} + L_{i10D}$ $\quad S_{59.60.28.x} = 1512.48\,in$

$S_{59.60.28.y} := y_{59}$ $\quad S_{59.60.28.y} = -319.15\,in$

$S_{59.60.28.z} := z_{59}$ $\quad S_{59.60.28.z} = -63\,in$

$S_{59.60.29.x} := S_{59.60.28.x} + L_{i10D}$ $\quad S_{59.60.29.x} = 1557.48\,in$

$S_{59.60.29.y} := y_{59}$ $\quad S_{59.60.29.y} = -319.15\,in$

$S_{59.60.29.z} := z_{59}$ $\quad S_{59.60.29.z} = -63\,in$

$S_{59.60.30.x} := S_{59.60.29.x} + L_{i10D}$ $\quad S_{59.60.30.x} = 1602.48\,in$

$S_{59.60.30.y} := y_{59}$ $\quad S_{59.60.30.y} = -319.15\,in$

$S_{59.60.30.z} := z_{59}$ $\quad S_{59.60.30.z} = -63\,in$

$S_{59.60.31.x} := S_{59.60.30.x} + L_{i10D}$ $\quad S_{59.60.31.x} = 1647.48\,in$

$S_{59.60.31.y} := y_{59}$ $\quad S_{59.60.31.y} = -319.15\,in$

$S_{59.60.31.z} := z_{59}$ $\quad S_{59.60.31.z} = -63\,in$

$S_{59.60.32.x} := S_{59.60.31.x} + L_{i10D}$ $\quad S_{59.60.32.x} = 1692.48\,in$

$S_{59.60.32.y} := y_{59}$ $\quad S_{59.60.32.y} = -319.15\,in$

$S_{59.60.32.z} := z_{59}$ $\quad S_{59.60.32.z} = -63\,in$

$S_{59.60.33.x} := S_{59.60.32.x} + L_{i10D}$ $\quad S_{59.60.33.x} = 1737.48\,in$

$S_{59.60.33.y} := y_{59}$ $\quad S_{59.60.33.y} = -319.15\,in$

$S_{59.60.33.z} := z_{59}$ $\quad S_{59.60.33.z} = -63\,in$

$S_{59.60.34.x} := S_{59.60.33.x} + L_{i10D}$ $\quad S_{59.60.34.x} = 1782.48\,in$

$S_{59.60.34.y} := y_{59}$ $\quad S_{59.60.34.y} = -319.15\,in$

$S_{59.60.34.z} := z_{59}$ $\quad S_{59.60.34.z} = -63\,in$

$S_{59.60.35.x} := S_{59.60.34.x} + L_{i10D}$ $\quad S_{59.60.35.x} = 1827.48\,in$

$S_{59.60.35.y} := y_{59}$ $\quad S_{59.60.35.y} = -319.15\,in$

$S_{59.60.35.z} := z_{59}$ $\quad S_{59.60.35.z} = -63\,in$

$S_{59.60.36.x} := S_{59.60.35.x} + L_{i10D}$ $\quad S_{59.60.36.x} = 1872.48\,in$

$S_{59.60.36.y} := y_{59}$ $\quad S_{59.60.36.y} = -319.15\,in$

$S_{59.60.36.z} := z_{59}$ $\quad S_{59.60.36.z} = -63\,in$

$S_{59.60.37.x} := S_{59.60.36.x} + L_{i10D}$ $\quad S_{59.60.37.x} = 1917.48\,in$

$S_{59.60.37.y} := y_{59}$ $\quad S_{59.60.37.y} = -319.15\,in$

$S_{59.60.37.z} := z_{59}$ $\quad S_{59.60.37.z} = -63\,in$

$S_{59.60.38.x} := S_{59.60.37.x} + L_{i10D}$ $\quad S_{59.60.38.x} = 1962.48\,in$

$S_{59.60.38.y} := y_{59}$ $\quad S_{59.60.38.y} = -319.15\,in$

$S_{59.60.38.z} := z_{59}$ $\quad S_{59.60.38.z} = -63\,in$

$S_{59.60.39.x} := S_{59.60.38.x} + L_{i10D}$ $\quad S_{59.60.39.x} = 2007.48\,in$

$S_{59.60.39.y} := y_{59}$ $\quad S_{59.60.39.y} = -319.15\,in$

$S_{59.60.39.z} := z_{59}$ $\quad S_{59.60.39.z} = -63\,in$

$S_{59.60.40.x} := S_{59.60.39.x} + L_{i10D}$ $\quad S_{59.60.40.x} = 2052.48\,in$

$S_{59.60.40.y} := y_{59}$ $\quad S_{59.60.40.y} = -319.15\,in$

$S_{59.60.40.z} := z_{59}$ $\quad S_{59.60.40.z} = -63\,in$

$S_{59.60.41.x} := S_{59.60.40.x} + L_{i10D}$ $\quad S_{59.60.41.x} = 2097.48\,in$

$S_{59.60.41.y} := y_{59}$ $\quad S_{59.60.41.y} = -319.15\,in$

$S_{59.60.41.z} := z_{59}$ $\quad S_{59.60.41.z} = -63\,in$

$S_{59.60.42.x} := S_{59.60.41.x} + 4 \cdot L_{i1D}$ $\quad S_{59.60.42.x} = 2115.48\,in$

$S_{59.60.42.y} := y_{59}$ $\quad S_{59.60.42.y} = -319.15\,in$

$S_{59.60.42.z} := z_{59}$ $\quad S_{59.60.42.z} = -63\,in$

$S_{59.60.43.x} := S_{59.60.42.x} + L_{i2D}$ $S_{59.60.43.x} = 2124.48\,in$

$S_{59.60.43.y} := y_{59}$ $S_{59.60.43.y} = -319.15\,in$

$S_{59.60.43.z} := z_{59}$ $S_{59.60.43.z} = -63\,in$

$S_{59.60.44.x} := S_{59.60.43.x} + L_{i2D}$ $S_{59.60.44.x} = 2133.48\,in$

$S_{59.60.44.y} := y_{59}$ $S_{59.60.44.y} = -319.15\,in$

$S_{59.60.44.z} := z_{59}$ $S_{59.60.44.z} = -63\,in$

Soil spring coordinates between work points 60 & 61:

$S_{60.61.1.x} := x_{60}$ $S_{60.61.1.x} = 2142.48\,in$

$S_{60.61.1.y} := y_{60} - L_{i2D}$ $S_{60.61.1.y} = -328.15\,in$

$S_{60.61.1.z} := z_{60}$ $S_{60.61.1.z} = -63\,in$

$S_{60.61.2.x} := x_{60}$ $S_{60.61.2.x} = 2142.48\,in$

$S_{60.61.2.y} := S_{60.61.1.y} - L_{i2D}$ $S_{60.61.2.y} = -337.15\,in$

$S_{60.61.2.z} := z_{60}$ $S_{60.61.2.z} = -63\,in$

$S_{60.61.3.x} := x_{60}$ $S_{60.61.3.x} = 2142.48\,in$

$S_{60.61.3.y} := S_{60.61.2.y} - L_{i2D}$ $S_{60.61.3.y} = -346.15\,in$

$S_{60.61.3.z} := z_{60}$ $S_{60.61.3.z} = -63\,in$

$S_{60.61.4.x} := x_{60}$ $S_{60.61.4.x} = 2142.48\,in$

$S_{60.61.4.y} := S_{60.61.3.y} - L_{i10D}$ $S_{60.61.4.y} = -391.15\,in$

$S_{60.61.4.z} := z_{60}$ $S_{60.61.4.z} = -63\,in$

$S_{60.61.5.x} := x_{60}$ $\quad S_{60.61.5.x} = 2142.48\,in$

$S_{60.61.5.y} := S_{60.61.4.y} - L_{i10D}$ $\quad S_{60.61.5.y} = -436.15\,in$

$S_{60.61.5.z} := z_{60}$ $\quad S_{60.61.5.z} = -63\,in$

$S_{60.61.6.x} := x_{60}$ $\quad S_{60.61.6.x} = 2142.48\,in$

$S_{60.61.6.y} := S_{60.61.5.y} - L_{i10D}$ $\quad S_{60.61.6.y} = -481.15\,in$

$S_{60.61.6.z} := z_{60}$ $\quad S_{60.61.6.z} = -63\,in$

$S_{60.61.7.x} := x_{60}$ $\quad S_{60.61.7.x} = 2142.48\,in$

$S_{60.61.7.y} := S_{60.61.6.y} - L_{i10D}$ $\quad S_{60.61.7.y} = -526.15\,in$

$S_{60.61.7.z} := z_{60}$ $\quad S_{60.61.7.z} = -63\,in$

$S_{60.61.8.x} := x_{60}$ $\quad S_{60.61.8.x} = 2142.48\,in$

$S_{60.61.8.y} := S_{60.61.7.y} - 7.36889 \cdot L_{i1D}$ $\quad S_{60.61.8.y} = -559.31\,in$

$S_{60.61.8.z} := z_{60}$ $\quad S_{60.61.8.z} = -63\,in$

$S_{60.61.9.x} := x_{60}$ $\quad S_{60.61.9.x} = 2142.48\,in$

$S_{60.61.9.y} := S_{60.61.8.y} - L_{i2D}$ $\quad S_{60.61.9.y} = -568.31\,in$ (outside wall, see pg. 119)

$S_{60.61.9.z} := z_{60}$ $\quad S_{60.61.9.z} = -63\,in$

SAP2000 Output

Load Case 1: 25 degF @ half the average spring stiffness values:

This load case conservatively considers that the entire pipe line is the same maximum differential temperature across the entire cross-section of the pipe.

- Maximum Temperature (temperature load) = 25 degF

Max stress at Joint 57 (0" from Frame Element 29):

$P := -0.21 \cdot kip$	element local axis 1 (axial) force, per Attachment 10.6
$M_2 := -7.43 \cdot 10^{-4} \cdot kip \cdot in$	element local axis 2 (vertical) moment, per Attachment 10.6
$M_3 := -0.53 \cdot kip \cdot in$	element local axis 3 (transverse) moment, per Attachment 10.6
$M_{c.1} := \sqrt{M_2^2 + M_3^2}$ $M_{c.1} = 0.53\,kip \cdot in$	resultant moment due to the combined effects of seismic wave passage and SAMs
$F_{c.1} := \lvert P \rvert$	resultant force due to the combined effects of seismic wave passage and SAMs
$Z_{bw} = 5.67\,in^3$	backwash pipe section modulus
$A_{p.bw} = 6.28\,in^2$	backwash pipe wall area
$i := 2.0$	stress intensification factor for mitered elbows, per Table 3042-1 of Ref. 9.1

$$\frac{i \cdot M_{c.1}}{Z_{bw}} + \frac{F_{c.1}}{A_{p.bw}} = 220.3\,psi \quad < \quad 1100\ psi \quad \textbf{OK}$$

$$\frac{\frac{i \cdot M_{c.1}}{Z_{bw}} + \frac{F_{c.1}}{A_{p.bw}}}{1100 \cdot psi} = 0.2 \quad < \quad 1.0 \quad \textbf{OK}$$

Load Case 2: 20 degF @ half of the average spring stiffness values:

This load case more realistically considers that in the worst case scenario, the outer surface of the pipe line will be the same temperature as the ground temperature and the inner surface of the pipe line will be the same temperature as the water temperature. Since the thickness of the pipe wall is relatively large and HDPE is a poor conductor, the heat energy will take a significant amount of time to transfer in the outward radial direction. Therefore, due to expansion, longitudinal tension along the inner surface of the pipe line and longitudinal compression, due to contraction along the outer surface of the pipe line will result in a thermal gradient stress. The thermal gradient stress is computed by hand and is linearly combined with the stress that is captured by the maximum moment from the SAP2000 output with the load case that considers the temperature load as the difference between the average temperature and the minimum ground temperature.

- Maximum Temperature (temperature load) = 20 degF
- Gradient Stress (temperature load) = 35 psi

Max stress at Joint 57 (0" from Frame Element 29):

$P := -0.17 \cdot kip$ — element local axis 1 (axial) force, per Attachment 10.6

$M_2 := -8.56 \cdot 10^{-4} \cdot kip \cdot in$ — element local axis 2 (vertical) moment, per Attachment 10.6

$M_3 := -0.42 \cdot kip \cdot in$ — element local axis 3 (transverse) moment, per Attachment 10.6

$M_{c.2} := \sqrt{M_2^2 + M_3^2}$ — resultant moment due to the combined effects of seismic wave passage and SAMs

$M_{c.2} = 0.42\, kip \cdot in$

$F_{c.2} := |P|$ — resultant force due to the combined effects of seismic wave passage and SAMs

$i := 2.0$ — stress intensification factor for mitered elbows, per Table 3042-1 of Ref. 9.1

$$\frac{i \cdot M_{c.2}}{Z_{bw}} + \frac{F_{c.2}}{A_{p.bw}} + \sigma_{t.grad.bw} = 210.14\, psi \quad < \quad 1100\ psi \quad \textbf{OK}$$

$$\frac{\frac{i \cdot M_{c.2}}{Z_{bw}} + \frac{F_{c.2}}{A_{p.bw}} + \sigma_{t.grad.bw}}{1100 \cdot psi} = 0.19 \quad < \quad 1.0 \quad \textbf{OK}$$

Section 8.0 - Results, Conclusion, Limitations, & Impact Assessment

Section 8.1 - Results

Section 8.1.1 - Minimum Required Wall Thickness

Per Section 7.1 of this calculation:

Minimum Required Wall Thickness					
Line Type	Outer Diameter (in)	Internal Design Pressure (psig)	Allowable Stress (psi)	Min. Req. Wall Thickness (in)	Actual Wall Thickness (in)
Supply	36	165	695	3.82	3.85
Return	36	45	340	2.235	3.85
Backwash	4.5	160	695	0.46	0.5

Section 8.1.2 - Soil and Surcharge Analysis

Per Section 7.3 of this calculation:

Compression of Sidewalls (Bounding for all lines)	
Actual Stress (psi)	Allowable Stress (psi)
73.86	1000

Ring Deflection			
Line Type	Actual Deflection (in)	Allowable Deflection (in)	IC
Supply	1.06	1.44	0.74
Return	1.06	1.44	0.74
Backwash	0.03	0.18	0.17

Buckling Due to External Pressure			
Line Type	External Pressure (psi)	Buckling Capacity (psi)	IC
Supply	21.22	40.32	0.53
Return	21.22	40.32	0.53
Backwash	10.52	42.99	0.24

Section 8.1.3 - Flotation Analysis

Per Section 7.4 of this calculation:

Supply & Return Lines

$W_w = 272.57 \frac{lbf}{ft} < W_P + P_{E.min} \cdot D = 1736.67 \frac{lbf}{ft}$ therefore the unanchored pipe lines will not float

Backwash Lines

$W_{w.bw} = 4.17 \frac{lbf}{ft} < W_{P.bw} + P_{E.min} \cdot D_{bw} = 199.49 \frac{lbf}{ft}$ therefore the unanchored pipe lines will not float

Section 8.1.4 - Longitudinal Stress Analysis

Per Section 7.5 of this calculation:

Longitudinal Stress Analysis			
Line Type	**Longitudinal Stress (psi)**	**Allowable Stress (psi)**	**IC**
Supply	687.15	764.5	0.90
Return	348.19	374	0.93
Backwash (SSE)	716.7	924.35	0.78
Backwash (OBE)	562.98	764.5	0.74

Section 8.1.5 - Thermal Analysis

Per Section 7.6 & 7.8 of this calculation:

Thermal Analysis			
Line Type	**Thermal Stress (psi)**	**Allowable Stress (psi)**	**IC**
Supply	388.4	695	0.56
Return	294	340	0.86
Backwash	366.8	695	0.53

Section 8.1.6 - Seismic Analysis

Per Section 7.7 of this calculation:

Seismic Analysis			
Line Type	**Combined Stress (psi)**	**Allowable Stress (psi)**	**IC**
Supply	243.00	1100	0.22
Return	243.00	1100	0.22
Backwash (SSE)	310.91	1100	0.28
Backwash (OBE)	158.15	1100	0.14

Section 8.2 - Conclusion

The replacement ASME Section III Buried Essential Service Water System Piping elements for the supply, return and backwash lines, as described in Sections 7.1 through 7.8, are adequate for the loads described in Section 6 of the calculation.

No heavy transporter or Cooper E-80 live load is considered. Any future transport of heavy loads (ie: greater than 400 psf) over the buried pipe, must be evaluated.

Section 8.3 - Limitations

8.3.1 - HDPE Data Limitations

The analysis performed in this calculation uses allowable stress values and modulus of elasticity values from Ref. 9.27. NRC acceptance of the use of these values at Callaway Nuclear Plant is required to validate the results of this calculation.

8.3.2 - Soil Type & Compaction Limitations

The analysis performed in this calculation is based on the use of Class I or Class II soil as defined by ASTM D2321, with a minimum compaction of 95% Standard Proctor Density. The installation specification must ensure that these requirements are met to ensure that the results of this calculation are valid.

8.4 Impact Assessment

The following sections identify the documents reviewed for impact by this calculation and summarize the results of the impact assessments. Impacts as a result of the buried piping and interfacing above ground piping replacements being performed under MP 07-0066 are identified and evaluated as part of MP 07-0066.

8.4.1 FSAR / Site Addendum

The following sections of the standard plant FSAR (SP) and site addendum (SA) were reviewed for impact by this calculation:

3.2 (SP):
This calculation does not change the seismic, safety or code classification of the ESW system piping or components within the boundary of the analysis. The seismic, safety and code classification of the ESW system piping is as defined in FSAR Table 3.2-1. (NOT IMPACTED)

3.7(B).3.12 (SP):
The replacement buried piping is evaluated for seismic loads in accordance with design specification M-2017. Therefore, Section 3.7(B).3.12 should be updated to identify that the metallic buried pipelines are analyzed for seismic events in accordance with procedures described in Section 6.0 of BC-TOP-4A while the replacement HDPE buried piping is analyzed in accordance with design specification M-2017. (IMPACTED)

2.5.4.7 (SA):
The replacement buried piping is analyzed in accordance with design specification M-2017. Therefore, Section 2.5.4.7 should be updated to identify that the metallic buried pipelines are analyzed as described in Section 6.0 of BC-TOP-4A while the replacement HDPE buried piping is analyzed in accordance with design specification M-2017. (IMPACTED)

Appendix 3.8A (SA):
This calculation uses SAP2000 software. Appendix 3.8A must be updated to include this program. (IMPACTED)

8.4.2 Calculations

The following calculations were reviewed for impact by this calculation:

C-32-01-CP, Revision A:
Calculation C-32-01-CP performs a seismic analysis for the existing 30" buried ESW piping. The existing piping is replaced by MP 07-0066. The replacement piping stress analysis, including seismic analysis, is performed in Calculation 2007-16760. Therefore, Calculation C-32-01-CP should be superseded by Calculation 2007-16760. (IMPACTED)

C-32-01-F, Revision 1:
Calculation C-32-01-F performs a seismic analysis for the existing 30" buried ESW piping. The existing piping is replaced by MP 07-0066. The replacement piping stress analysis, including seismic analysis, is performed in Calculation 2007-16760. Therefore, Calculation C-32-01-F should be superseded by Calculation 2007-16760. (IMPACTED)

C-32-03-F, Revision 2:
Calculation C-32-03-F performs seismic analysis for the buried ESW piping. The 4"/8" diameter ESW strainer backwash lines (with the exception of the existing 4" piping spools at the tie-ins to the 36" gravity drain lines) and 30" diameter supply and return lines are replaced with new piping by MP 07-0066. The 36" diameter gravity drain piping, and the existing 4" strainer backwash line spools at the tie-ins to the 36" gravity drain lines, are not impacted. Hence, the analysis performed in Calculation C-32-03-F remains applicable to the 36" diameter gravity drain piping and the existing 4" strainer backwash line spools at the tie-ins to the 36" gravity drain lines. The replacement piping stress analysis, including seismic analysis, is performed in Calculation 2007-16760. Therefore, Calculation C-32-03-F is partially superseded by Calculation 2007-16760. (IMPACTED)

C-4166-00-2, Revision 0:
Calculation C-4166-00-2 performs a stress analysis for the existing buried ESW piping and determines required minimum wall thickness values. The 4" diameter ESW strainer backwash lines and 30" diameter supply and return lines are replaced with new piping by MP 07-0066. The 36" diameter gravity drain piping is not impacted. The 30" piping is replaced by MP 07-0066. The replacement piping is analyzed by Calculation 2007-16760. The required minimum wall thickness values for the replacement piping are determined by Calculation 2007-13241. Therefore, Calculation C-4166-00-2 is partially superseded by Calculations 2007-16760 and 2007-13241. (IMPACTED)

C-4183-00-2, Revision 0:
Calculation C-4183-00-2 analyzes the existing buried ESW piping to justify continued operation for an additional 18 months when considering pin hole leaks and wall thinning. The subject piping is replaced by MP 07-0066. However, as Calculation C-4183-00-2 performs a historical operability evaluation, it is not impacted by Calculation 2007-16760. (NOT IMPACTED).

EF-108, Revision 0:
Calculation EF-108 evaluates a repair to the existing buried ESW piping. The subject piping is replaced by MP 07-0066. Therefore, Calculation EF-108 is no longer required and should be voided. (IMPACTED)

S-22-05-CP, Revision A:
Calculation S-22-05-CP performs a stress analysis for the existing 30" buried ESW piping. The existing piping is replaced by MP 07-0066. The replacement piping is analyzed by Calculation 2007-16760. Therefore, Calculation S-22-05-CP should be superseded by Calculation 2007-16760. (IMPACTED)

S-U-22-05-F, Revision 2:
Calculation S-U-22-05-F performs a stress analysis for the existing 30" buried ESW piping. The existing piping is replaced by MP 07-0066. The replacement piping is analyzed by Calculation 2007-16760. Therefore, Calculation S-U-22-05-F should be superseded by Calculation 2007-16760. (IMPACTED)

S-U-22-08-F, Revision 1:
Calculation S-U-22-08-F performs a stress analysis for the existing 4" and 36" buried ESW piping. The existing 4" piping is replaced by MP 07-0066 (with the exception of the existing 4" strainer backwash line spools at the tie-ins to the 36" gravity drain lines). The 36" diameter gravity drain piping is not impacted. Hence, the analysis performed in Calculation S-U-22-08-F remains applicable to the 36" diameter gravity drain piping and the existing 4" strainer backwash line spools at the tie-ins to the 36" gravity drain lines. The replacement piping is analyzed by Calculation 2007-16760. Therefore, Calculation S-U-22-08-F should be partially superseded by Calculation 2007-16760. (IMPACTED)

8.4.3 Design and Operating Margins

The design and operating conditions of the subject piping are not impacted by this calculation. Changes to the design conditions made by MP 07-0066 are evaluated within MP 07-0066, and not within this calculation. The pipe stress for the replacement buried ESW piping installed by MP 07-0066 and the margin between the new pipe stress values and the Code allowable stress values are summarized in Section 8.1 of this calculation.

Section 9.0 - References

9.1 ASME Code Case N-755, "Use of Polyethylene (PE) Plastic Pipe for Section III, Division I, Construction and Section XI Repair/Replacement Activities," as approved by the Board on Nuclear Codes and Standards on 03/22/2007 (Prior to incorporation of ASME Editor changes made in PDF Release)

9.2 ASME Code Case N-755 Subsection 3000, "Design Commentary"

9.3 AISC (ASD) Steel Construction Manual, 9th Edition

9.4 Callaway Final Safety Analysis Report (FSAR), Rev. OL-16, "Standard Plant"

9.5 Bechtel Calculation No. C-32-01-F, Rev. 1, "Seismic Analysis of ESWS Buried Piping (30"ϕ)"

9.6 American Society of Civil Engineers (ASCE) 4-98, "Seismic Analysis of Safety-Related Nuclear Structures and Commentary"

9.7 EPRI Report 1013549, "Nondestructive Evaluation: Seismic Design Criteria for Polyethylene Pipe Replacement Code Case," September 2006

9.8 Bechtel Calculation No. S-U-22-05-F, Rev. 2, "30"ϕ ESWS Buried Piping"

9.9 Plastic Pipe Institute (PPI) Handbook, First Edition

9.10 Mechanical Engineering Reference Manual, 12th Edition, Copyright 2006 by Professional Publications, Inc.

9.11 Callaway Specification No. 10884-C-0, Rev. 3, "Civil and Structural Design Criteria for Site-Related (Non-Standard) Category I Structures for Union Electric Company Callaway Plant Unit 1"

9.12 American Iron and Steel Institute (AISI), "Handbook of Steel Drainage & Highway Construction Products," Copyright 1971

9.13 Change Package No. MP 07-0066, Rev. 0, "Replace Buried ESW Piping with HDPE Material"

9.14 Correspondence No. NEMM 07-0034, "Design Input Transmittal of IST Valve Stroke Data for the Callaway ESW System ," Dated November 2, 2007 (Attachment 10.2)

9.15 PolyPipe, Inc., "Design and Engineering Guide for Polyethylene Piping," 12/05

9.16 "Standard Handbook for Civil Engineers," 4th Edition, McGraw-Hill, Copyright 1996, by F. S. Merritt, M. K. Loftin, & J. T. Ricketts

9.17 Specification No. M-2017, Rev. 0, "Design Specification for Replacement ASME Section III Buried Essential Service Water System Piping"

9.18 EPRI Report 1011836, "Design and Qualification of High-Density Polyethylene for ASME Safety Class 3 Piping Systems," December 2005

9.19 "Designing with Geosynthetics," 3rd Edition, by R. M. Koerner, Copyright 1994 Prentice-Hall, Inc.

9.20 Specification No. S-1080, Rev. 0, "Technical Specification for the Installation of Replacement ASME Section III Buried Essential Service Water System Piping"

9.21 Specification No. 4645-032A, Rev. 7, "Technical Specification for Excavation and Backfill for ESWS Piping and Ductbanks"

9.22 Specification No. 4645-004A, Rev. 17, Power Block Fill and Backfill

9.23 ASTM D 2321-05, "Standard Practice for Underground Installation of Thermoplastic Pipe for Sewers and Other Gravity-Flow Applications"

9.24 ASTM D 3350-06, "Standard Specification for Polyethylene Plastic Pipe and Fittings Materials"

9.25 Calculation No. 2007-13241, Rev. 0, "Minimum Wall Thickness for ESW Buried HDPE Piping"

9.26 Specification No. M-2016, Rev. 0, "Technical Specification for the Supply of Polyethylene Piping, Mitered Elbows and Flange Adapters for the Essential Service Water System"

9.27 Correspondence No. NEMM 07-0038, "Design Inputs for Development of MP 07-0066, ESW Buried Piping Replacement," Dated November 30, 2007 (Attachment 10.3)

9.28 Bechtel Calculation No. S-U-22-08-F, Rev. 1, "36"ϕ and 4"ϕ Essential Service Water System (ESWS) Buried Piping"

9.29 Callaway Drawing M-25EF01 (as modified by MP-07-0066), "Hanger Location Drawing Essential Service Water Control Bldg. (A & B) Train"

9.30 ASME Boiler and Pressure Vessel Code, Section III, Division 1, Subsection NA, "General Requirements", 1974 Edition through Summer 1975 Addenda

9.31 Technical Paper No. 410, "Flow of Fluids Through Valves, Fittings, and Pipe," Crane Company,
Copyright 1988

9.32 Callaway Drawing C-2019 (as modified by MP-07-0066), "Civil Structural Standard Details Sheet No. 29"

9.33 Callaway Drawing C-U206 (per MP-07-0066), "ESWS Replacement Yard Piping Plan"

9.34 Callaway Drawing M-UC0211 (as modified by MP-07-0066), "UHS Cooling Tower Piping Plan & Sections"

9.35 Callaway Drawing M-U50211 (as modified by MP-07-0066), "Hanger Location DWG UHS Cooling Tower Piping Plan and Section"

9.36 Callaway Drawing C-UC516 (per MP-07-0066), "UHS Cooling Tower Penetration Rooms - Plans"

9.37 Callaway Drawing M-U50111 (as modified by MP-07-0066), "Hanger Location DWG ESWS Pumphouse Piping Plan"

9.38 Callaway Drawing M-U50311 (per MP-07-0066), "Hanger Location DWG ESWS Underground Yard Vault Piping Plans"

9.39 Callaway Drawing C-U208 (per MP-07-0066), "ESW Replacement Piping Trench Details"

9.40 Callaway Drawing C-UC309 (per MP-07-0066), "ESW Pumphouse Vaults Plans and Sections"

9.41 Callaway Drawing C-2S3211 (as modified by MP-07-0066), "Control Building Area 1 Structural Steel Framing Plan Floor EL. 1984'-0""

9.42 Callaway Final Safety Analysis Report (FSAR), Rev. OL-16, "Site Addendum"

9.43 Callaway Nuclear Plant Document MS-01, Rev. 96 (as modified by MP-07-0066), "Piping Class Summary"

9.44 Callaway Nuclear Plant Document MS-02, Rev. 83 (as modified by MP-07-0066), "Piping Class Sheets"

9.45 ISCO Industries, "HDPE Product Catalog," Version 2.2 2007

Section 10.0 - Attachments

10.1 ENDOT Industries, Inc., "Piping and Tubing," 05/2007

10.2 Correspondence No. NEMM 07-0034, "Design Input Transmittal of IST Valve Stroke Data for the Callaway ESW System ," Dated November 2, 2007

10.3 Correspondence No. NEMM 07-0038, "Design Inputs for Development of MP 07-0066, ESW Buried Piping Replacement," Dated November 30, 2007

10.4 Train B - Return Line, "Thermal Stress Analysis," SAP2000 Input/Output

10.5 Train B - Return Line, "Seismic Stress Analysis," SAP2000 Input/Output

10.6 Train B - Backwash Line, "Thermal Stress Analysis," SAP2000 Input/Output

10.7 Train B - Backwash Line, "Seismic Stress Analysis," SAP2000 Input/Output

10.8 ASME Code Case N-755, "Use of Polyethylene (PE) Plastic Pipe for Section III, Division I, Construction and Section XI Repair/Replacement Activities," as approved by the Board on Nuclear Codes and Standards on 03/22/2007 (Prior to incorporation of ASME Editor changes made in PDF Release)

ENDOT INDUSTRIES

PIPE AND TUBING

EndoPoly

SPECIFICATIONS FOR PE 4710/PE 3408 GEOTHERMAL PIPE

MATERIALS SPECIFICATIONS:

ASTM D3350 – Cell Classification	445574 C*
ASTM D1505 – Density	0.959 g/cc
ASTM D1238 – Melt Index	>0.08 g/10 min.
ASTM D 638 – Tensile Strength	>3600 PSI
ASTM D2837 – Hydrostatic Design Basis	1600 PSI @ 23°C
	1000 PSI @ 60°C
ASTM D 790 – Flexural Modulus	150,000 PSI
ASTM D 746 – Brittleness Temp.	<-103°F
ASTM F1473 – PENT	>4000 hours
NSF Certified under Standard 14 & 61	

**Exceeds IGSHPA minimum standards*

ASTM D3035 - STANDARD DIAMETER RATIO (SDR) = 11 – 200 PSI

SIZE	O.D.	MINIMUM WALL	WT/ 100 FT.
3/4	1.050"	0.095"	12.9 lbs.
1	1.315"	0.120"	19.9 lbs.
1-1/4	1.660"	0.151"	31.4 lbs.
1-1/2	1.900"	0.173"	41.1 lbs.
2	2.375"	0.216"	63.9 lbs.
3	3.500"	0.318"	140.5 lbs.
4	4.500"	0.409"	229.0 lbs.

ASTM D3035 - STANDARD DIAMETER RATIO (SDR) = 13.5 – 160 PSI

SIZE	O.D.	MINIMUM WALL	WT/ 100 FT.
3/4	1.050"	0.078"	9.9 lbs.
1	1.315"	0.097"	16.0 lbs.
1-1/4	1.660"	0.123"	26.5 lbs.
1-1/2	1.900"	0.141"	33.0 lbs.
2	2.375"	0.176"	54.0 lbs.
3	3.500"	0.259"	110.0 lbs.
4	4.500"	0.333"	178.6 lbs.

3/4", 1" and 1-1/4" pipe is available with Factory installed U-Bends.

ENDOT INDUSTRIES, INC.
www.endot.com • e-mail: info@endot.com

CORPORATE HEADQUARTERS • 60 Green Pond Road, Rockaway, NJ 07866 • 800-443-6368 • FAX 973-625-4087
OHIO OPERATIONS • 739 County Road 1, South Point, OH 45680 • 800-345-3990 • FAX 740-377-9844
TENNESSEE OPERATIONS • 400 Bohannon Avenue, Greeneville, TN 37745 • 800-438-5851 • FAX 423-639-3722
OKLAHOMA OPERATIONS • 2615 OK State Highway 69A, MidAmerica Industrial Park, Pryor Creek, OK 74361
800-44ENDOT • FAX 973-625-4087

5/07 2.5M

AmerenUE
Callaway Plant

NEMM 07-0034
November 2, 2007

Mr. Thomas M. Musto
Senior Associate
Sargent & Lundy, LLC
55 East Monroe St.
Chicago, IL 60603

Subject: Design Input Transmittal of IST Valve Stroke Data for the Callaway ESW system

Reference: 1. MP 07-0066, Replace Buried ESW piping with HDPE material

Dear Mr. Musto:

Sargent and Lundy (S&L) has requested that Ameren UE provide various IST design inputs for development of MP 07-0066, ESW Buried Piping Replacement. The design inputs that are transmitted herein are valve stroke data from in-service testing (IST) data for the following valves:

EFHV0037	EFHV0038	EFHV0039	EFHV0040	EFHV0041
EFHV0042	EFHV0065	EFHV0066	EFPDV0019	EFPDV0020

The information provided by this letter was provided from the IST Engineering database. It should be noted that the information provided by this letter is available in the Callaway document control system, either under the applicable jobs shown or the date shown; however it was determined more efficient for S&L to reference a letter consolidating this data rather than a reference for each specific job.

The information requested is being transmitted in the attachments to this letter.

Sincerely,

Matt Brandes

Attachment

cc: S. L. Abel
E. S. Smith
A160.2001

a subsidiary of Ameren Corporation

		EFHV0037				EFHV0065								EFHV0039				EFHV0041			
JOB	DATE TESTED	Open Stroke Time	Open Lower Limit	Open Upper Limit	Open Max Limit	Open Stroke Time	Open Lower Limit	Open Upper Limit	Open Max Limit	Close Stroke Time	Close Lower Limit	Close Upper Limit	Close Max Limit	Close Stroke Time	Close Lower Limit	Close Upper Limit	Close Max Limit	Close Stroke Time	Close Lower Limit	Close Upper Limit	Close Max Limit
	5/18/94	27.2				28.1				28.8				26.6				25.5			
	8/10/94	27.2				27.2				28.6				26.2				25.0			
	11/2/94	27.4				26.2				26.8				26.3				25.5			
	1/25/95	27.3				28.8				28.1				26.2				25.5			
	5/17/95	26.7	23.4	31.6	35.0	26.0	23.8	32.2	35.0	28.5	23.8	32.2	35.0	26.6	23.0	31.1	35.0	26.3	21.8	29.6	35.0
	7/12/95	27.2	23.4	31.6	35.0	27.5	23.8	32.2	35.0	29.2	23.8	32.2	35.0	26.2	23.0	31.1	35.0	25.4	21.8	29.6	35.0
	10/4/95	27.4	23.4	31.6	35.0		23.8	32.2	35.0		23.8	32.2	35.0	26.2	23.0	31.1	35.0	25.5	21.8	29.6	35.0
	10/6/95		23.4	31.6	35.0	28.2	23.8	32.2	35.0	28.7	23.8	32.2	35.0		23.0	31.1	35.0		21.8	29.6	35.0
	12/27/95	27.0	23.4	31.6	35.0	27.9	23.8	32.2	35.0	28.2	23.8	32.2	35.0	26.1	23.0	31.1	35.0	25.3	21.8	29.6	35.0
	3/20/96	27.2	23.4	31.6	35.0	27.2	23.8	32.2	35.0	28.1	23.8	32.2	35.0	26.6	23.0	31.1	35.0	25.4	21.8	29.6	35.0
	6/12/96	26.5	23.4	31.6	35.0	27.9	23.8	32.2	35.0	28.4	23.8	32.2	35.0	26.5	23.0	31.1	35.0	25.3	21.8	29.6	35.0
	9/4/96	27.2	23.4	31.6	35.0	26.8	23.8	32.2	35.0	28.3	23.8	32.2	35.0	26.7	23.0	31.1	35.0	25.7	21.8	29.6	35.0
	10/25/96		23.4	31.6	35.0		23.8	32.2	35.0		23.8	32.2	35.0		23.0	31.1	35.0		21.8	29.6	35.0
	11/27/96	27.1	23.4	31.6	35.0	28.0	23.8	32.2	35.0	28.5	23.8	32.2	35.0	26.7	23.0	31.1	35.0	25.6	21.8	29.6	35.0
	2/20/97	27.4	23.4	31.6	35.0	27.2	23.8	32.2	35.0	28.3	23.8	32.2	35.0	26.6	23.0	31.1	35.0	25.4	21.8	29.6	35.0
	5/14/97	27.1	23.4	31.6	35.0	27.8	23.8	32.2	35.0	28.3	23.8	32.2	35.0	26.7	23.0	31.1	35.0	25.5	21.8	29.6	35.0
	8/6/97	27.6	23.4	31.6	35.0	27.4	23.8	32.2	35.0	29.1	23.8	32.2	35.0	26.6	23.0	31.1	35.0	25.5	21.8	29.6	35.0
	9/4/97		23.4	31.6	35.0		23.8	32.2	35.0		23.8	32.2	35.0		23.0	31.1	35.0		21.8	29.6	35.0
	10/28/97	27.2	23.4	31.6	35.0	27.3	23.8	32.2	35.0	28.3	23.8	32.2	35.0	26.7	23.0	31.1	35.0	25.9	21.8	29.6	35.0
	2/8/98	27.1	23.4	31.6	35.0	28.0	23.8	32.2	35.0	28.6	23.8	32.2	35.0	26.7	23.0	31.1	35.0	25.5	21.8	29.6	35.0
	4/27/98	27.2	23.4	31.6	35.0	27.0	23.8	32.2	35.0	28.3	23.8	32.2	35.0	26.3	23.0	31.1	35.0	25.7	21.8	29.6	35.0
	7/8/98	27.3	23.4	31.6	35.0	27.8	23.8	32.2	35.0	28.4	23.8	32.2	35.0	26.4	23.0	31.1	35.0	25.6	21.8	29.6	35.0
	9/30/98	27.1	23.4	31.6	35.0	27.1	23.8	32.2	35.0	28.3	23.8	32.2	35.0	26.4	23.0	31.1	35.0	25.6	21.8	29.6	35.0
	12/16/99	27.3	23.4	31.6	35.0	27.2	23.8	32.2	35.0	28.2	23.8	32.2	35.0	26.4	23.0	31.1	35.0	25.8	21.8	29.6	35.0
	1/20/99		23.4	31.6	35.0		23.8	32.2	35.0		23.8	32.2	35.0		23.0	31.1	35.0		21.8	29.6	35.0
	3/17/99	27.0	23.4	31.6	35.0	27.3	23.8	32.2	35.0	28.3	23.8	32.2	35.0	26.3	23.0	31.1	35.0	25.5	21.8	29.6	35.0
	5/8/99		23.4	31.6	35.0		23.8	32.2	35.0		23.8	32.2	35.0		23.0	31.1	35.0		21.8	29.6	35.0
	5/9/99		23.4	31.6	35.0		23.8	32.2	35.0		23.8	32.2	35.0		23.0	31.1	35.0		21.8	29.6	35.0
	5/12/99		23.4	31.6	35.0		23.8	32.2	35.0		23.8	32.2	35.0		23.0	31.1	35.0		21.8	29.6	35.0
	6/8/99	27.1	23.4	31.6	35.0	27.1	23.8	32.2	35.0	28.4	23.8	32.2	35.0	26.4	23.0	31.1	35.0	25.6	21.8	29.6	35.0
	7/7/99		23.4	31.6	35.0		23.8	32.2	35.0		23.8	32.2	35.0		23.0	31.1	35.0		21.8	29.6	35.0
	8/4/99		23.4	31.6	35.0		23.8	32.2	35.0		23.8	32.2	35.0		23.0	31.1	35.0		21.8	29.6	35.0
	9/1/99	27.1	23.4	31.6	35.0		23.8	32.2	35.0		23.8	32.2	35.0	26.4	23.0	31.1	35.0	25.6	21.8	29.6	35.0
	10/11/99	27.9	23.4	31.6	35.0	27.9	23.8	32.2	35.0	28.3	23.8	32.2	35.0		23.0	31.1	35.0		21.8	29.6	35.0
	10/31/99		23.4	31.6	35.0		23.8	32.2	35.0		23.8	32.2	35.0		23.0	31.1	35.0		21.8	29.6	35.0
S643576	11/16/99	27.2	23.4	31.6	35.0	26.2	23.8	32.2	35.0	28.2	23.8	32.2	35.0	26.2	23.0	31.1	35.0	25.8	21.8	29.6	35.0
S648460	12/22/99		23.4	31.6	35.0		23.8	32.2	35.0		23.8	32.2	35.0		23.0	31.1	35.0		21.8	29.6	35.0
S650011	1/19/00		23.4	31.6	35.0		23.8	32.2	35.0		23.8	32.2	35.0		23.0	31.1	35.0		21.8	29.6	35.0
S648459	2/16/00	27.1	23.4	31.6	35.0	27.9	23.8	32.2	35.0	28.2	23.8	32.2	35.0	26.4	23.0	31.1	35.0	25.6	21.8	29.6	35.0
S652185	3/15/00		23.4	31.6	35.0		23.8	32.2	35.0		23.8	32.2	35.0		23.0	31.1	35.0		21.8	29.6	35.0
S653482	4/12/00		23.4	31.6	35.0		23.8	32.2	35.0		23.8	32.2	35.0		23.0	31.1	35.0		21.8	29.6	35.0
S652184	5/12/00	27.2	23.4	31.6	35.0	28.2	23.8	32.2	35.0	27.6	23.8	32.2	35.0	26.3	23.0	31.1	35.0	25.7	21.8	29.6	35.0
S656116	6/7/00		23.4	31.6	35.0		23.8	32.2	35.0		23.8	32.2	35.0		23.0	31.1	35.0		21.8	29.6	35.0
S656115	8/3/00	27.2	23.4	31.6	35.0	28.2	23.8	32.2	35.0	28.3	23.8	32.2	35.0	26.3	23.0	31.1	35.0	25.6	21.8	29.6	35.0

		EFHV0037				EFHV0065								EFHV0039				EFHV0041			
JOB	DATE TESTED	Open Stroke Time	Open Lower Limit	Open Upper Limit	Open Max Limit	Open Stroke Time	Open Lower Limit	Open Upper Limit	Open Max Limit	Close Stroke Time	Close Lower Limit	Close Upper Limit	Close Max Limit	Close Stroke Time	Close Lower Limit	Close Upper Limit	Close Max Limit	Close Stroke Time	Close Lower Limit	Close Upper Limit	Close Max Limit
S659290	10/25/00	27.1	23.4	31.6	35.0	27.9	23.8	32.2	35.0	28.1	23.8	32.2	35.0	26.2	23.0	31.1	35.0	25.6	21.8	29.6	35.0
S663328	1/18/01	27.0	23.4	31.6	35.0	27.9	23.8	32.2	35.0	28.0	23.8	32.2	35.0	26.4	23.0	31.1	35.0	25.6	21.8	29.6	35.0
S667979	5/5/01	27.1	23.4	31.6	35.0	28.0	23.8	32.2	35.0	28.5	23.8	32.2	35.0	26.8	23.0	31.1	35.0	25.6	21.8	29.6	35.0
S675247	5/11/01		23.4	31.6	35.0		23.8	32.2	35.0		23.8	32.2	35.0		23.0	31.1	35.0		21.8	29.6	35.0
S675252	7/3/01	26.8	23.4	31.6	35.0	27.0	23.8	32.2	35.0	27.9	23.8	32.2	35.0	26.2	23.0	31.1	35.0	25.3	21.8	29.6	35.0
S678123	9/26/01	27.1	23.4	31.6	35.0	28.9	23.8	32.2	35.0	27.4	23.8	32.2	35.0	26.6	23.0	31.1	35.0	25.6	21.8	29.6	35.0
S682128	12/19/01	27.0	23.4	31.6	35.0	26.7	23.8	32.2	35.0	28.1	23.8	32.2	35.0	26.3	23.0	31.1	35.0	25.5	21.8	29.6	35.0
S685660	3/12/02	27.1	23.4	31.6	35.0	28.1	23.8	32.2	35.0	28.2	23.8	32.2	35.0	26.4	23.0	31.1	35.0	25.6	21.8	29.6	35.0
S689270	6/6/02	27.3	23.4	31.6	35.0	26.8	23.8	32.2	35.0	28.3	23.8	32.2	35.0	26.4	23.0	31.1	35.0	25.0	21.8	29.6	35.0
R616501A			23.4	31.6	35.0		23.8	32.2	35.0		23.8	32.2	35.0		23.0	31.1	35.0		21.8	29.6	35.0
S697959			23.4	31.6	35.0		23.8	32.2	35.0		23.8	32.2	35.0		23.0	31.1	35.0		21.8	29.6	35.0
S692983	8/28/02	27.2	23.4	31.6	35.0	27.1	23.8	32.2	35.0	28.3	23.8	32.2	35.0	26.7	23.0	31.1	35.0	24.9	21.8	29.6	35.0
S674864	11/19/02		23.4	31.6	35.0		23.8	32.2	35.0		23.8	32.2	35.0		23.0	31.1	35.0		21.8	29.6	35.0
S698935	11/23/02		23.4	31.6	35.0		23.8	32.2	35.0		23.8	32.2	35.0		23.0	31.1	35.0		21.8	29.6	35.0
S696544	11/28/02	27.7	23.4	31.6	35.0	26.7	23.8	32.2	35.0	28.2	23.8	32.2	35.0	26.3	23.0	31.1	35.0	24.8	21.8	29.6	35.0
S701065	12/19/02		23.4	31.6	35.0		23.8	32.2	35.0		23.8	32.2	35.0		23.0	31.1	35.0		21.8	29.6	35.0
S702416	1/15/03		23.4	31.6	35.0		23.8	32.2	35.0		23.8	32.2	35.0		23.0	31.1	35.0		21.8	29.6	35.0
S703341	2/13/03	27.1	23.4	31.6	35.0	25.6	23.8	32.2	35.0	30.6	23.8	32.2	35.0	25.8	23.0	31.1	35.0	25.0	21.8	29.6	35.0
S705051	3/12/03		23.4	31.6	35.0		23.8	32.2	35.0		23.8	32.2	35.0		23.0	31.1	35.0		21.8	29.6	35.0
S706182	4/9/03		23.4	31.6	35.0		23.8	32.2	35.0		23.8	32.2	35.0		23.0	31.1	35.0		21.8	29.6	35.0
S705049	5/7/03	27.4	23.4	31.6	35.0	26.9	23.8	32.2	35.0	28.4	23.8	32.2	35.0	26.3	23.0	31.1	35.0	25.1	21.8	29.6	35.0
S708691	7/30/03	27.3	23.4	31.6	35.0	26.4	23.8	32.2	35.0	29.6	23.8	32.2	35.0	26.3	23.0	31.1	35.0	24.9	21.8	29.6	35.0
S712318	10/25/03	27.1	23.4	31.6	35.0	27.9	23.8	32.2	35.0	28.3	23.8	32.2	35.0	26.5	23.0	31.1	35.0	24.9	21.8	29.6	35.0
S715776	1/14/04	27.0	23.4	31.6	35.0	27.0	23.8	32.2	35.0	28.3	23.8	32.2	35.0	26.3	23.0	31.1	35.0	25.0	21.8	29.6	35.0
S718700	5/9/04	26.9	23.4	31.6	35.0	27.0	23.8	32.2	35.0	28.3	23.8	32.2	35.0	26.3	23.0	31.1	35.0	24.9	21.8	29.6	35.0
S725114	6/30/04	27.1	23.4	31.6	35.0	26.6	23.8	32.2	35.0	28.3	23.8	32.2	35.0	26.2	23.0	31.1	35.0	25.0	21.8	29.6	35.0
S727023	9/23/04	27.0	23.4	31.6	35.0	27.5	23.8	32.2	35.0	28.5	23.8	32.2	35.0	26.1	23.0	31.1	35.0	24.8	21.8	29.6	35.0
S730757	12/15/04	27.1	23.4	31.6	35.0	28.2	23.8	32.2	35.0	29.8	23.8	32.2	35.0	26.2	23.0	31.1	35.0	24.9	21.8	29.6	35.0
04503556	3/9/05	27.3	23.4	31.6	35.0	26.3	23.8	32.2	35.0	30.4	23.8	32.2	35.0	26.3	23.0	31.1	35.0	24.9	21.8	29.6	35.0
05506740	5/30/05	27.0	23.4	31.6	35.0	28.3	23.8	32.2	35.0	28.6	23.8	32.2	35.0	26.2	23.0	31.1	35.0	25.0	21.8	29.6	35.0
05509728	8/24/05	27.3	23.4	31.6	35.0	28.1	23.8	32.2	35.0	28.7	23.8	32.2	35.0	26.3	23.0	31.1	35.0	24.7	21.8	29.6	35.0
W227065	10/11/05		23.4	31.6	35.0		23.8	32.2	35.0		23.8	32.2	35.0		23.0	31.1	35.0		21.8	29.6	35.0
05513375	12/14/05	27.2	23.4	31.6	35.0	28.0	23.8	32.2	35.0	28.7	23.8	32.2	35.0	26.3	23.0	31.1	35.0	25.1	21.8	29.6	35.0
05518421	2/8/06	27.2	23.4	31.6	35.0	26.8	23.8	32.2	35.0	28.6	23.8	32.2	35.0	26.3	23.0	31.1	35.0	25.1	21.8	29.6	35.0
06520321	5/3/06	27.1	23.4	31.6	35.0	27.6	23.8	32.2	35.0	28.6	23.8	32.2	35.0	26.3	23.0	31.1	35.0	24.9	21.8	29.6	35.0
06524801	7/26/06	26.9	23.4	31.6	35.0	27.8	23.8	32.2	35.0	28.5	23.8	32.2	35.0	26.3	23.0	31.1	35.0	24.9	21.8	29.6	35.0
06527098	10/19/06	27.1	23.4	31.6	35.0	26.9	23.8	32.2	35.0	28.6	23.8	32.2	35.0	26.3	23.0	31.1	35.0	25.0	21.8	29.6	35.0
06530157	1/9/07	27.1	23.4	31.6	35.0	26.9	23.8	32.2	35.0	28.7	23.8	32.2	35.0	26.3	23.0	31.1	35.0	24.9	21.8	29.6	35.0
S697732/S 699079			23.4	31.6	35.0		23.8	32.2	35.0		23.8	32.2	35.0		23.0	31.1	35.0		21.8	29.6	35.0
07500329	4/1/07	27.1	23.4	31.6	35.0	27.3	23.8	32.2	35.0	28.7	23.8	32.2	35.0	26.1	23.0	31.1	35.0	24.9	21.8	29.6	35.0
06523868	5/4/07	26.5	23.4	31.6	35.0	28.1	23.8	32.2	35.0	28.5	23.8	32.2	35.0	26.3	23.0	31.1	35.0	24.9	21.8	29.6	35.0
07503945	6/27/07	26.5	23.4	31.6	35.0	27.6	23.8	32.2	35.0	28.6	23.8	32.2	35.0	26.3	23.0	31.1	35.0	24.9	21.8	29.6	35.0

		EFHV0038				EFHV0066								EFHV0040				EFHV0042			
JOB	DATE TESTED	Open Stroke Time	Open Lower Limit	Open Upper Limit	Open Max Limit	Open Stroke Time	Open Lower Limit	Open Upper Limit	Open Max Limit	Close Stroke Time	Close Lower Limit	Close Upper Limit	Close Max Limit	Close Stroke Time	Close Lower Limit	Close Upper Limit	Close Max Limit	Close Stroke Time	Close Lower Limit	Close Upper Limit	Close Max Limit
	6/1/94	26.9				26.1				27.0				27.1				26.0			
	7/27/94																				
	8/24/94	27.1				25.2				26.6				27.2				26.1			
	11/16/94	26.9				26.0				26.6				27.3				26.1			
	2/8/95	26.8				26.2				26.4				27.3				26.7			
S563453	5/3/95	26.8	22.5	30.5	35.0	25.5	22.5	30.5	35.0	26.7	22.5	30.5	35.0	27.1	23.4	31.6	35.0	26.1	23.0	31.1	35.0
S568463	7/26/95	26.9	22.5	30.5	35.0	26.1	22.5	30.5	35.0	26.6	22.5	30.5	35.0	27.1	23.4	31.6	35.0	26.1	23.0	31.1	35.0
S572147	10/17/95	26.9	22.5	30.5	35.0	26.1	22.5	30.5	35.0	26.7	22.5	30.5	35.0	27.3	23.4	31.6	35.0	26.1	23.0	31.1	35.0
S575887	1/10/96	26.9	22.5	30.5	35.0	26.1	22.5	30.5	35.0	26.5	22.5	30.5	35.0	27.2	23.4	31.6	35.0	26.1	23.0	31.1	35.0
	4/3/96	27.2	22.5	30.5	35.0	26.0	22.5	30.5	35.0	26.7	22.5	30.5	35.0	27.2	23.4	31.6	35.0	26.1	23.0	31.1	35.0
	5/19/96		22.5	30.5	35.0		22.5	30.5	35.0		22.5	30.5	35.0		23.4	31.6	35.0		23.0	31.1	35.0
S582816	6/26/96	26.9	22.5	30.5	35.0	26.2	22.5	30.5	35.0	26.5	22.5	30.5	35.0	27.0	23.4	31.6	35.0	25.9	23.0	31.1	35.0
S586248	9/18/96	26.9	22.5	30.5	35.0	26.1	22.5	30.5	35.0	26.8	22.5	30.5	35.0	27.1	23.4	31.6	35.0	26.1	23.0	31.1	35.0
	10/24/96		22.5	30.5	35.0		22.5	30.5	35.0		22.5	30.5	35.0	26.9					23.0	31.1	35.0
	10/31/96		22.5	30.5	35.0		22.5	30.5	35.0		22.5	30.5	35.0						23.0	31.1	35.0
S591023	12/11/96	26.7	22.5	30.5	35.0	26.4	22.5	30.5	35.0	26.6	22.5	30.5	35.0	26.9	22.9	30.9	35.0	26.0	23.0	31.1	35.0
R595722A	12/11/96		22.5	30.5	35.0		22.5	30.5	35.0		22.5	30.5	35.0		22.9	30.9	35.0		23.0	31.1	35.0
S595767	3/5/97	26.8	22.5	30.5	35.0	25.7	22.5	30.5	35.0	26.6	22.5	30.5	35.0	27.8	22.9	30.9	35.0	26.6	23.0	31.1	35.0
S599248	5/29/97	26.7	22.5	30.5	35.0	26.4	22.5	30.5	35.0	26.6	22.5	30.5	35.0	26.8	22.9	30.9	35.0	26.1	23.0	31.1	35.0
S602900	8/20/97	26.8	22.5	30.5	35.0	25.8	22.5	30.5	35.0	26.6	22.5	30.5	35.0	26.9	22.9	30.9	35.0	26.0	23.0	31.1	35.0
S606734	11/17/97	25.8	22.5	30.5	35.0	25.7	22.5	30.5	35.0	26.5	22.5	30.5	35.0	26.9	22.9	30.9	35.0	26.0	23.0	31.1	35.0
	2/2/98		22.5	30.5	35.0		22.5	30.5	35.0		22.5	30.5	35.0		22.9	30.9	35.0		23.0	31.1	35.0
S610244	2/4/98	26.7	22.5	30.5	35.0	26.1	22.5	30.5	35.0	26.7	22.5	30.5	35.0	27.0	22.9	30.9	35.0	25.9	23.0	31.1	35.0
S614502	5/6/98	26.9	22.5	30.5	35.0	26.6	22.5	30.5	35.0	26.7	22.5	30.5	35.0	27.1	22.9	30.9	35.0	26.0	23.0	31.1	35.0
S620338	7/22/98	26.9	22.5	30.5	35.0	26.8	22.5	30.5	35.0	26.5	22.5	30.5	35.0	26.8	22.9	30.9	35.0	25.9	23.0	31.1	35.0
S623954	10/14/98	27.6	22.5	30.5	35.0	26.5	22.5	30.5	35.0	26.5	22.5	30.5	35.0	26.9	22.9	30.9	35.0	25.8	23.0	31.1	35.0
S627401	1/6/99	27.6	22.5	30.5	35.0	26.5	22.5	30.5	35.0	26.6	22.5	30.5	35.0	26.9	22.9	30.9	35.0	26.9	23.0	31.1	35.0
S630696	3/31/99	27.6	22.5	30.5	35.0	25.9	22.5	30.5	35.0	26.7	22.5	30.5	35.0	26.9	22.9	30.9	35.0	25.9	23.0	31.1	35.0
S634965	6/23/99	27.6	22.5	30.5	35.0		22.5	30.5	35.0		22.5	30.5	35.0	26.9	22.9	30.9	35.0	25.9	23.0	31.1	35.0
S640318	7/21/99		22.5	30.5	35.0		22.5	30.5	35.0		22.5	30.5	35.0		22.9	30.9	35.0		23.0	31.1	35.0
S641231	8/14/99		22.5	30.5	35.0		22.5	30.5	35.0		22.5	30.5	35.0		22.9	30.9	35.0		23.0	31.1	35.0
S640004	9/15/99	27.8	22.5	30.5	35.0		22.5	30.5	35.0		22.5	30.5	35.0	26.9	22.9	30.9	35.0	26.0	23.0	31.1	35.0
S644281	10/12/99		22.5	30.5	35.0	27.0	22.5	30.5	35.0	27.0	22.5	30.5	35.0		22.9	30.9	35.0		23.0	31.1	35.0
S646260	11/10/99		22.5	30.5	35.0		22.5	30.5	35.0		22.5	30.5	35.0		22.9	30.9	35.0		23.0	31.1	35.0
	12/8/99	27.6	22.5	30.5	35.0	25.9	22.5	30.5	35.0	25.3	22.5	30.5	35.0	25.9	22.9	30.9	35.0	26.2	23.0	31.1	35.0
	1/5/00		22.5	30.5	35.0		22.5	30.5	35.0		22.5	30.5	35.0		22.9	30.9	35.0		23.0	31.1	35.0
	2/2/00		22.5	30.5	35.0		22.5	30.5	35.0		22.5	30.5	35.0		22.9	30.9	35.0		23.0	31.1	35.0
	3/1/00	27.5	22.5	30.5	35.0	26.8	22.5	30.5	35.0	26.9	22.5	30.5	35.0	27.0	22.9	30.9	35.0	25.9	23.0	31.1	35.0
	3/3/00		22.5	30.5	35.0		22.5	30.5	35.0		22.5	30.5	35.0		22.9	30.9	35.0		23.0	31.1	35.0
S652866	5/31/00	27.5	22.5	30.5	35.0	26.3	22.5	30.5	35.0	26.9	22.5	30.5	35.0	27.0	22.9	30.9	35.0	25.8	23.0	31.1	35.0
S656725	8/15/00	27.6	22.5	30.5	35.0	25.8	22.5	30.5	35.0	26.6	22.5	30.5	35.0	26.8	22.9	30.9	35.0	25.8	23.0	31.1	35.0
S659903	11/8/00	27.5	22.5	30.5	35.0	25.6	22.5	30.5	35.0	27.3	22.5	30.5	35.0	26.8	22.9	30.9	35.0	25.9	23.0	31.1	35.0
S663855	2/1/01	27.6	22.5	30.5	35.0	26.1	22.5	30.5	35.0	27.1	22.5	30.5	35.0	26.9	22.9	30.9	35.0	25.9	23.0	31.1	35.0
S668894	5/4/01	27.5	22.5	30.5	35.0	25.6	22.5	30.5	35.0	26.9	22.5	30.5	35.0	26.8	22.9	30.9	35.0	25.8	23.0	31.1	35.0
S656942	5/13/01		22.5	30.5	35.0		22.5	30.5	35.0		22.5	30.5	35.0		22.9	30.9	35.0		23.0	31.1	35.0
S675253	7/17/01	27.6	22.5	30.5	35.0	26.3	22.5	30.5	35.0	26.8	22.5	30.5	35.0	27.0	22.9	30.9	35.0	25.9	23.0	31.1	35.0
S678721	10/10/01	27.5	22.5	30.5	35.0	26.1	22.5	30.5	35.0	26.8	22.5	30.5	35.0	26.9	22.9	30.9	35.0	25.9	23.0	31.1	35.0
S682763	1/2/02	27.4	22.5	30.5	35.0	27.0	22.5	30.5	35.0	26.7	22.5	30.5	35.0	26.9	22.9	30.9	35.0	25.8	23.0	31.1	35.0
S686082	3/27/02	27.6	22.5	30.5	35.0	27.1	22.5	30.5	35.0	27.2	22.5	30.5	35.0	26.9	22.9	30.9	35.0	25.8	23.0	31.1	35.0
S689851	6/19/02	27.5	22.5	30.5	35.0		22.5	30.5	35.0		22.5	30.5	35.0	26.8	22.9	30.9	35.0	25.8	23.0	31.1	35.0
S675384			22.5	30.5	35.0	26.2	22.5	30.5	35.0	26.8	22.5	30.5	35.0		22.9	30.9	35.0		23.0	31.1	35.0
S693620	9/11/02	27.6	22.5	30.5	35.0	27.1	22.5	30.5	35.0	26.7	22.5	30.5	35.0	26.9	22.9	30.9	35.0	25.8	23.0	31.1	35.0
S674946	11/13/02		22.5	30.5	35.0		22.5	30.5	35.0		22.5	30.5	35.0		22.9	30.9	35.0		23.0	31.1	35.0

		EFHV0038				EFHV0066								EFHV0040				EFHV0042			
JOB	DATE TESTED	Open Stroke Time	Open Lower Limit	Open Upper Limit	Open Max Limit	Open Stroke Time	Open Lower Limit	Open Upper Limit	Open Max Limit	Close Stroke Time	Close Lower Limit	Close Upper Limit	Close Max Limit	Close Stroke Time	Close Lower Limit	Close Upper Limit	Close Max Limit	Close Stroke Time	Close Lower Limit	Close Upper Limit	Close Max Limit
S697087	12/4/02	27.1	22.5	30.5	35.0	25.5	22.5	30.5	35.0	26.5	22.5	30.5	35.0	26.8	22.9	30.9	35.0	25.8	23.0	31.1	35.0
S701647	2/26/03	27.5	22.5	30.5	35.0	24.6	22.5	30.5	35.0	26.8	22.5	30.5	35.0	26.7	22.9	30.9	35.0	25.8	23.0	31.1	35.0
S705618	5/21/03	27.4	22.5	30.5	35.0	26.5	22.5	30.5	35.0	27.3	22.5	30.5	35.0	27.0	22.9	30.9	35.0	25.8	23.0	31.1	35.0
S693683	5/23/03		22.5	30.5	35.0		22.5	30.5	35.0		22.5	30.5	35.0		22.9	30.9	35.0		23.0	31.1	35.0
S709448	8/14/03	27.6	22.5	30.5	35.0	26.2	22.5	30.5	35.0	26.9	22.5	30.5	35.0	26.8	22.9	30.9	35.0	25.7	23.0	31.1	35.0
S712927	11/5/03	27.4	22.5	30.5	35.0		22.5	30.5	35.0	27.5	22.5	30.5	35.0	26.8	22.9	30.9	35.0	25.7	23.0	31.1	35.0
S716262	1/30/04	27.6	22.5	30.5	35.0	24.7	22.5	30.5	35.0	26.2	22.5	30.5	35.0	26.9	22.9	30.9	35.0	25.8	23.0	31.1	35.0
S700324	5/13/04	27.4	22.5	30.5	35.0	25.8	22.5	30.5	35.0	26.3	22.5	30.5	35.0		22.9	30.9	35.0		23.0	31.1	35.0
S719666	5/27/04	27.4	22.5	30.5	35.0	25.8	22.5	30.5	35.0	26.5	22.5	30.5	35.0	26.7	22.9	30.9	35.0	26.0	23.0	31.1	35.0
S725183	7/13/04	27.3	22.5	30.5	35.0	26.1	22.5	30.5	35.0	26.3	22.5	30.5	35.0	26.6	22.9	30.9	35.0	26.0	23.0	31.1	35.0
S727647	10/6/04	27.5	22.5	30.5	35.0	24.3	22.5	30.5	35.0	26.4	22.5	30.5	35.0	26.7	22.9	30.9	35.0	26.2	23.0	31.1	35.0
S731303	12/29/04	27.6	22.5	30.5	35.0	26.0	22.5	30.5	35.0	26.5	22.5	30.5	35.0	26.8	22.9	30.9	35.0	26.2	23.0	31.1	35.0
04504219	3/23/05	27.4	22.5	30.5	35.0	25.8	22.5	30.5	35.0	26.3	22.5	30.5	35.0	26.8	22.9	30.9	35.0	26.2	23.0	31.1	35.0
05507269	6/15/05	27.5	22.5	30.5	35.0	25.1	22.5	30.5	35.0	26.4	22.5	30.5	35.0	26.8	22.9	30.9	35.0	26.2	23.0	31.1	35.0
05510261	9/7/05	27.5	22.5	30.5	35.0	26.1	22.5	30.5	35.0	26.4	22.5	30.5	35.0	26.9	22.9	30.9	35.0	26.3	23.0	31.1	35.0
W227066																			23.0	31.1	35.0
05513899	11/29/05	27.6	22.5	30.5	35.0	25.6	22.5	30.5	35.0	26.4	22.5	30.5	35.0	26.8	22.9	30.9	35.0	26.2	23.0	31.1	35.0
P688998	2/14/06																		23.0	31.1	35.0
05527753	2/21/06	27.5	22.5	30.5	35.0	25.3	22.5	30.5	35.0	26.5	22.5	30.5	35.0	26.8	22.9	30.9	35.0	26.1	23.0	31.1	35.0
06520792	5/15/06	27.8	22.5	30.5	35.0	26.0	22.5	30.5	35.0	26.4	22.5	30.5	35.0	27.0	22.9	30.9	35.0	26.2	23.0	31.1	35.0
06524312	8/10/06	27.5	22.5	30.5	35.0	26.1	22.5	30.5	35.0	26.4	22.5	30.5	35.0	30.0	22.9	30.9	35.0	26.2	23.0	31.1	35.0
06527585	11/1/06	27.6	22.5	30.5	35.0	25.4	22.5	30.5	35.0	26.5	22.5	30.5	35.0	30.3	25.5	34.5	35.0	26.3	23.0	31.1	35.0
06530565	1/24/07	27.5	22.5	30.5	35.0	24.6	22.5	30.5	35.0	26.4	22.5	30.5	35.0	30.1	25.5	34.5	35.0	26.1	23.0	31.1	35.0
07506761	7/10/07	27.4				25.3				26.4				30.1				26.1			

		EFPDV0020									
JOB	DATE TESTED	Open Stroke Time	Open Lower Limit	Open Upper Limit	Open Max Limit	Close Stroke Time	Close Lower Limit	Close Upper Limit	Close Max Limit	PIT	Field Comments/As-Left Remarks/Follow-Up Documentation/Notes
	6/1/94	16.3									
	7/27/94										
	8/24/94	16.2									
	11/16/94	16.0									
	2/8/95	16.2									
S563453	5/3/95	16.9	13.6	18.4	30.0						
S568463	7/26/95	16.3	13.6	18.4	30.0						
S572147	10/17/95	16.1	13.6	18.4	30.0						
S575887	1/10/96	16.4	13.6	18.4	30.0						
	4/3/96	16.3	13.6	18.4	30.0						
	5/19/96	16.5	13.6	18.4	30.0	15.2					
S582816	6/26/96	15.6	13.6	18.4	30.0	14.6	13.6	18.4	30.0		
S586248	9/18/96	16.3	13.6	18.4	30.0	15.1	13.6	18.4	30.0		
	10/24/96		13.6	18.4	30.0		13.6	18.4	30.0		
	10/31/96		13.6	18.4	30.0		13.6	18.4	30.0		
S591023	12/11/96	16.5	13.6	18.4	30.0	15.1	13.6	18.4	30.0		EFPDV0020 originally had no close indication. Required electricians to adjust limits. Retest sat on R595722A. EFV0076 - 106 drips/minute
R595722A	12/11/96	16.5	13.6	18.4	30.0	15.1	13.6	18.4	30.0		
S595767	3/5/97	16.3	13.6	18.4	30.0	15.1	13.6	18.4	30.0		
S599248	5/29/97	16.3	13.6	18.4	30.0	14.3	13.6	18.4	30.0		
S602900	8/20/97	16.3	13.6	18.4	30.0	15.1	13.6	18.4	30.0		
S606734	11/17/97	16.3	13.6	18.4	30.0	15.1	13.6	18.4	30.0		
	2/2/98	13.6	13.6	18.4	30.0	13.8	13.6	18.4	30.0		
S610244	2/4/98	16.2	13.6	18.4	30.0	15.0	13.6	18.4	30.0		
S614502	5/6/98	16.2	13.6	18.4	30.0	15.1	13.6	18.4	30.0		
S620338	7/22/98	15.3	13.6	18.4	30.0	15.3	13.6	18.4	30.0		
S623954	10/14/98	15.8	13.6	18.4	30.0	14.7	13.6	18.4	30.0		
S627401	1/6/99	16.1	13.6	18.4	30.0	14.9	13.6	18.4	30.0		
S630696	3/31/99	15.1	13.6	18.4	30.0	14.9	13.6	18.4	30.0		
S634965	6/23/99	15.8	13.6	18.4	30.0	14.8	13.6	18.4	30.0		
S640004	9/15/99	16.2	13.6	18.4	30.0	14.9	13.6	18.4	30.0		
	12/8/99	16.4	13.6	18.4	30.0	14.1	13.6	18.4	30.0		

		EFPDV0020									
JOB	DATE TESTED	Open Stroke Time	Open Lower Limit	Open Upper Limit	Open Max Limit	Close Stroke Time	Close Lower Limit	Close Upper Limit	Close Max Limit	PIT	Field Comments/As-Left Remarks/Follow-Up Documentation/Notes
	3/1/00	14.0	13.6	18.4	30.0	13.8	13.6	18.4	30.0		
S652866	5/31/00	16.0	13.6	18.4	30.0	14.2	13.6	18.4	30.0		
S656725	8/15/00	16.1	13.6	18.4	30.0	14.0	13.6	18.4	30.0	3.0	
S659903	11/8/00	16.0	13.6	18.4	30.0	14.2	13.6	18.4	30.0	3.0	
S663855	2/1/01	16.0	13.6	18.4	30.0	14.6	13.6	18.4	30.0	3.0	
S668894	5/4/01	16.8	13.6	18.4	30.0	13.9	13.6	18.4	30.0	3.2	
S675253	7/17/01	16.2	13.6	18.4	30.0	14.7	13.6	18.4	30.0	3.1	
S678721	10/10/01	16.1	13.6	18.4	30.0	14.1	13.6	18.4	30.0	3.1	
S682763	1/2/02	16.0	13.6	18.4	30.0	14.4	13.6	18.4	30.0	3.0	
S686082	3/27/02	15.4	13.6	18.4	30.0	15.2	13.6	18.4	30.0	3.1	
S689851	6/19/02	15.9	13.6	18.4	30.0	14.1	13.6	18.4	30.0	3.2	
S693620	9/11/02	15.6	13.6	18.4	30.0	14.2	13.6	18.4	30.0	3.1	
S674946	11/13/02		13.6	18.4	30.0		13.6	18.4	30.0		
S697087	12/4/02	15.8	13.6	18.4	30.0	15.3	13.6	18.4	30.0	3.1	
S701647	2/26/03	15.8	13.6	18.4	30.0	15.3	13.6	18.4	30.0	3.1	
S705618	5/21/03	14.2	13.6	18.4	30.0	14.2	13.6	18.4	30.0	3.1	
S709448	8/14/03	15.7	13.6	18.4	30.0	14.2	13.6	18.4	30.0	3.1	
S712927	11/5/03	15.8	13.6	18.4	30.0	14.3	13.6	18.4	30.0	3.0	
S716262	1/30/04	15.8	13.6	18.4	30.0	14.3	13.6	18.4	30.0	3.1	
S700324	5/13/04	15.6	13.6	18.4	30.0	14.3	13.6	18.4	30.0	3.1	
S719666	5/27/04	15.6	13.6	18.4	30.0	14.4	13.6	18.4	30.0	3.1	
S725183	7/13/04	15.2	13.6	18.4	30.0	14.3	13.6	18.4	30.0	3.1	
S727647	10/6/04	17.0	13.6	18.4	30.0	15.3	13.6	18.4	30.0		
S731303	12/29/04	15.9	13.6	18.4	30.0	15.5	13.6	18.4	30.0		
04504219	3/23/05	14.3	13.6	18.4	30.0	14.0	13.6	18.4	30.0		
05507269	6/15/05	14.7	13.6	18.4	30.0	13.4	13.6	18.4	30.0		CAR 200504135 - EFPDV0020 outside normal range.
05510261	9/7/05	15.3	13.6	18.4	30.0	15.4	13.6	18.4	30.0		
W227066		14.1	13.6	18.4	30.0	14.5	13.6	18.4	30.0	3.0	retest following ESW strainer replacement in RF14
05513899	11/29/05	14.3	13.6	18.4	30.0	15.3	13.6	18.4	30.0		
05527753	2/21/06	15.8	13.6	18.4	30.0	14.9	13.6	18.4	30.0		
06520792	5/15/06	15.2	13.6	18.4	30.0	13.8	13.6	18.4	30.0		
06524312	8/10/06	16.0	13.6	18.4	30.0	14.1	13.6	18.4	30.0		
06527585	11/1/06	15.8	13.6	18.4	30.0	15.2	13.6	18.4	30.0	3.1	

		EFPDV0020									
JOB	DATE TESTED	Open Stroke Time	Open Lower Limit	Open Upper Limit	Open Max Limit	Close Stroke Time	Close Lower Limit	Close Upper Limit	Close Max Limit	PIT	Field Comments/As-Left Remarks/Follow-Up Documentation/Notes
06530565	1/24/07	15.8	13.6	18.4	30.0	14.6	13.6	18.4	30.0		
07500888	5/16/07	15.9	13.6	18.4	30.0	15.1	13.6	18.4	30.0		
07506761	7/10/07	15.5	13.6	18.4	30.0	14.9	13.6	18.4	30.0		

		EFPDV0019									
JOB	DATE TESTED	Open Stroke Time	Open Lower Limit	Open Upper Limit	Open Max Limit	Close Stroke Time	Close Lower Limit	Close Upper Limit	Close Max Limit	PIT	Field Comments/As-Left Remarks/Follow-Up Documentation/Notes
	5/18/94	12.9									
	8/10/94	15.2									
	11/2/94	15.1									
	1/25/95	15.8									
	5/17/95	14.2									
	7/12/95	15.0									
	10/4/95	15.2									
	12/27/95	15.0				13.3					
	3/20/96	15.3	12.8	17.3	30.0	14.4	11.3	15.3	30.0		
	6/12/96	14.6	12.8	17.3	30.0	14.4	11.3	15.3	30.0		
	9/4/96	15.0	12.8	17.3	30.0	13.4	11.3	15.3	30.0		
	11/27/96	14.8	12.8	17.3	30.0	14.5	11.3	15.3	30.0		
	2/20/97	15.4	12.8	17.3	30.0	14.4	11.3	15.3	30.0		
	5/14/97	15.4	12.8	17.3	30.0	14.7	11.3	15.3	30.0		
	8/6/97	13.4	12.8	17.3	30.0	14.2	11.3	15.3	30.0		
	10/28/97	13.9	12.8	17.3	30.0	14.4	11.3	15.3	30.0		
	2/8/98	15.5	12.8	17.3	30.0	13.4	11.3	15.3	30.0		
	4/27/98	15.3	12.8	17.3	30.0	12.4	11.3	15.3	30.0		
	7/8/98	13.7	12.8	17.3	30.0	14.4	11.3	15.3	30.0		
	9/30/98	13.5	12.8	17.3	30.0	14.1	11.3	15.3	30.0		
	12/16/99	14.3	12.8	17.3	30.0	14.0	11.3	15.3	30.0		
	3/17/99	14.6	12.8	17.3	30.0	13.6	11.3	15.3	30.0		
	5/8/99	15.0	12.8	17.3	30.0	12.9	11.3	15.3	30.0		
	5/9/99	15.0	12.8	17.3	30.0	12.6	11.3	15.3	30.0		
	5/12/99	14.9	12.8	17.3	30.0	13.0	11.3	15.3	30.0		
	6/8/99	14.8	12.8	17.3	30.0	14.7	11.3	15.3	30.0		
	9/1/99	14.9	12.8	17.3	30.0	14.1	11.3	15.3	30.0		

		EFPDV0019									
JOB	DATE TESTED	Open Stroke Time	Open Lower Limit	Open Upper Limit	Open Max Limit	Close Stroke Time	Close Lower Limit	Close Upper Limit	Close Max Limit	PIT	Field Comments/As-Left Remarks/Follow-Up Documentation/Notes
S643576	11/16/99	14.8	12.8	17.3	30.0	13.3	11.3	15.3	30.0		
S648459	2/16/00	14.2	12.8	17.3	30.0	13.1	11.3	15.3	30.0		
S652184	5/12/00	13.4	12.8	17.3	30.0	14.9	11.3	15.3	30.0		
S656115	8/3/00	14.8	12.8	17.3	30.0	14.0	11.3	15.3	30.0	2.80	
S659290	10/25/00	14.5	12.8	17.3	30.0	13.0	11.3	15.3	30.0	2.80	
S663328	1/18/01	14.7	12.8	17.3	30.0	12.7	11.3	15.3	30.0	2.80	
S667979	5/5/01	14.3	12.8	17.3	30.0	14.5	11.3	15.3	30.0	3.40	
S675252	7/3/01	17.2	12.8	17.3	30.0	15.2	11.3	15.3	30.0	3.50	EFPDV0019 was replaced during RF11
S678123	9/26/01	17.7	14.6	19.8	30.0	16.1	12.9	17.5	30.0	3.63	
S682128	12/19/01	16.7	14.6	19.8	30.0	15.1	12.9	17.5	30.0	3.30	
S685660	3/12/02	17.7	14.6	19.8	30.0	13.9	12.9	17.5	30.0	3.40	
S689270	6/6/02	17.8	14.6	19.8	30.0	16.6	12.9	17.5	30.0	3.35	
S692983	8/28/02	17.4	14.6	19.8	30.0	13.5	12.9	17.5	30.0	3.40	
S696544	11/28/02	17.7	14.6	19.8	30.0	15.8	12.9	17.5	30.0	3.40	
S703341	2/13/03	17.6	14.6	19.8	30.0	15.7	12.9	17.5	30.0	3.40	
S705049	5/7/03	17.4	14.6	19.8	30.0	15.0	12.9	17.5	30.0	3.38	
S708691	7/30/03	18.1	14.6	19.8	30.0	15.6	12.9	17.5	30.0	3.40	
S712318	10/25/03	17.6	14.6	19.8	30.0	13.6	12.9	17.5	30.0	3.40	
S715776	1/14/04	17.9	14.6	19.8	30.0	15.4	12.9	17.5	30.0	3.40	
S718700	5/9/04	17.7	14.6	19.8	30.0	16.3	12.9	17.5	30.0	3.10	
S725114	6/30/04	17.7	14.6	19.8	30.0	16.4	12.9	17.5	30.0	3.50	
S727023	9/23/04	17.9	14.6	19.8	30.0	15.7	12.9	17.5	30.0		
S730757	12/15/04	17.8	14.6	19.8	30.0	16.5	12.9	17.5	30.0		
04503556	3/9/05	15.9	14.6	19.8	30.0	17.7	12.9	17.5	30.0		EFPDV0019 2nd close stroke - 16.1 sec - CAR 200501546
05506740	5/30/05	17.8	14.6	19.8	30.0	15.8	12.9	17.5	30.0		
05509728	8/24/05	17.1	14.6	19.8	30.0	16.1	12.9	17.5	30.0		

		EFPDV0019									
JOB	DATE TESTED	Open Stroke Time	Open Lower Limit	Open Upper Limit	Open Max Limit	Close Stroke Time	Close Lower Limit	Close Upper Limit	Close Max Limit	PIT	Field Comments/As-Left Remarks/Follow-Up Documentation/Notes
W227065	10/11/05	19.2	14.6	19.8	30.0	16.9	12.9	17.5	30.0	3.70	retest following ESW strainer work
05513375	12/14/05	18.8	14.6	19.8	30.0	17.2	12.9	17.5	30.0		
05518421	2/8/06	19.1	14.6	19.8	30.0	17.1	12.9	17.5	30.0		
06520321	5/3/06	19.8	14.6	19.8	30.0	17.4	12.9	17.5	30.0	3.60	
06524801	7/26/06	19.2	16.3	22.0	30.0	17.9	14.4	19.4	30.0		
06527098	10/19/06	19.4	16.3	22.0	30.0	17.2	14.4	19.4	30.0		
06530157	1/9/07	18.5	16.3	22.0	30.0	17.5	14.4	19.4	30.0		
07500329	4/1/07	18.7	16.3	22.0	30.0	18.6	14.4	19.4	30.0		
06523868	5/4/07	17.2	16.3	22.0	30.0	17.3	14.4	19.4	30.0	3.70	
07503945	6/27/07	19.3	16.3	22.0	30.0	18.8	14.4	19.4	30.0		

AmerenUE
Callaway Plant

NEMM 07-0038
November 30, 2007

Mr. Thomas M. Musto
Senior Associate
Sargent & Lundy, LLC
55 East Monroe St.
Chicago, IL 60603

Subject: Design Inputs for Development of MP 07-0066, ESW Buried Piping Replacement

Reference: 1. MP 07-0066, "Replace Buried ESW Piping with HDPE Material"

Dear Mr. Musto:

Sargent and Lundy (S&L) have requested that Ameren UE provide the following information as design inputs for development of Reference 1. The design inputs that are requested are:

1. Stress allowables for the high density polyethylene (HDPE) piping at temperatures above those currently provided in ASME Code Case N-755.
2. Elastic modulus values for the HDPE piping at temperatures above those currently provided in ASME Code Case N-755.

The information requested is being transmitted in the attachments to this letter.

For item 1, the stress allowables for HDPE provided by this transmittal are equivalent to the tables currently being added to the planned revision of Code Case N-755 (i.e. Revision 1), which is under review of ASME. During the ASME code committee meeting in November 2007, the issue of design factor was discussed. Although the ASME may yet approve a design factor greater than 0.5, for the scope of MP 07-0066, a design factor of 0.5 should be used.

For item 2, the elastic modulus to be used is table 3031-3 in ASME Code Case N-755, "Use of Polyethylene (PE) Plastic Pipe for Section III, Division 1, Construction and Section XI Repair/Replacement Activities", as approved by BPV Standards Committee 02/02/2007". This table is equivalent to Table 3210-3 in the current Code Case N-755 Rev. 0. Based on discussion with Frank Schaaf and Bill Adams (WL Plastics), the use of the elastic modulus values at 140°F for temperatures higher than those currently provided in ASME Code Case N-755 (i.e. >140°F) is conservative for thermal expansion and contraction stress calculations. For ring deflection and buckling due to external pressure, a minimum elastic modulus of 2 ksi for temperatures less than or equal to 176°F can be used for the PE 4710 material. Industry testing is currently being performed to determine actual values. However, based on linear extrapolation of the data in Code Case N-755, the actual value is expected to be higher. Therefore, the use of a value of 2 ksi is expected to be conservative.

Sincerely,

Matt Brandes

Matt Brandes

Attachment

cc: S. L. Abel
J. E. O'Sullivan
A160.2001

Table 3021-1 Allowable Design Stress, S, for PE4710 (Dow DGDA-2490/2492)* (psi)

Service Temperature °F (°C)	Load Duration					
	2.5 Years			50 Years**		
	0.50 DF	0.56 DF	0.63 DF	0.50 DF	0.56 DF	0.63 DF
73 (23)	Not Applicable			800	889	1000
86 (30)	Not Applicable			738	826	929
95 (35)	Not Applicable			695	778	875
104 (40)	Not Applicable			653	732	823
113 (45)	Not Applicable			613	687	773
122 (50)	Not Applicable			574	643	724
131 (55)	Not Applicable			537	601	676
140 (60)	Not Applicable			500	560	630
176 (80)	340	382	430	Not Applicable		

* Values not applicable to all materials.
** For service temperature 140°F (60°C), use 50-year allowable design stress for service life 50-years.

TRAIN B - RETURN LINE THERMAL STRESS ANALYSIS SAP2000 INPUT/OUTPUT

ATTACHMENT 10.4 (SEE SECTION 7.8.1)

S A P 2 0 0 0 (R)

Structural Analysis Programs

Nonlinear Version 7.40

Copyright (C) 1978-2000
COMPUTERS AND STRUCTURES, INC.
All rights reserved

This copy of SAP2000 is for the exclusive use of

THE LICENSEE

Unauthorized use is in violation of Federal copyright laws

It is the responsibility of the user to verify all
results produced by this program

21 Dec 2007 08:24:07

Program SAP2000 Nonlinear Version 7.40 File: Thermal @ 105 & 60 degF @ 0.5K.OUT
Page
1

D I S P L A C E M E N T D E G R E E S O F F R E E D O M

(A) = Active DOF, equilibrium equation
(-) = Restrained DOF, reaction computed
(+) = Constrained DOF
(>) = External substructure DOF
( ) = Null DOF

JOINTS	U1	U2	U3	R1	R2	R3
32 TO 41	A	A	A	A	A	A
32A	-	-	-	-	-	-
32W	A	A	A	A	A	A
41A	-	-	-	-	-	-
41W TO 404106	A	A	A	A	A	A

A S S E M B L E D J O I N T M A S S E S

IN LOCAL COORDINATES

JOINT	U1	U2	U3	R1	R2	R3
32	0.002479	0.002479	0.002479	.000000	.000000	.000000
33	0.003374	0.003374	0.003374	.000000	.000000	.000000
34	0.003374	0.003374	0.003374	.000000	.000000	.000000
35	0.005387	0.005387	0.005387	.000000	.000000	.000000
36	0.005061	0.005061	0.005061	.000000	.000000	.000000
37	0.003374	0.003374	0.003374	.000000	.000000	.000000
38	0.003608	0.003608	0.003608	.000000	.000000	.000000
39	0.004373	0.004373	0.004373	.000000	.000000	.000000
40	0.003377	0.003377	0.003377	.000000	.000000	.000000
41	0.003143	0.003143	0.003143	.000000	.000000	.000000
32A	0.000371	0.000371	0.000371	.000000	.000000	.000000
32W	0.002766	0.002766	0.002766	.000000	.000000	.000000
41A	0.000179	0.000179	0.000179	.000000	.000000	.000000
41W	0.004650	0.004650	0.004650	.000000	.000000	.000000
323302	0.002345	0.002345	0.002345	.000000	.000000	.000000
323303	0.003374	0.003374	0.003374	.000000	.000000	.000000
323304	0.003374	0.003374	0.003374	.000000	.000000	.000000
333401	0.003456	0.003456	0.003456	.000000	.000000	.000000
333402	0.003456	0.003456	0.003456	.000000	.000000	.000000
343501	0.003374	0.003374	0.003374	.000000	.000000	.000000
343502	0.003374	0.003374	0.003374	.000000	.000000	.000000
343503	0.003374	0.003374	0.003374	.000000	.000000	.000000
343504	0.003700	0.003700	0.003700	.000000	.000000	.000000
353601	0.006747	0.006747	0.006747	.000000	.000000	.000000
353602	0.006748	0.006748	0.006748	.000000	.000000	.000000
353603	0.011808	0.011808	0.011808	.000000	.000000	.000000
353604	0.016868	0.016868	0.016868	.000000	.000000	.000000
353605	0.016869	0.016869	0.016869	.000000	.000000	.000000
353606	0.016869	0.016869	0.016869	.000000	.000000	.000000
353607	0.019466	0.019466	0.019466	.000000	.000000	.000000
353608	0.022064	0.022064	0.022064	.000000	.000000	.000000
353609	0.014406	0.014406	0.014406	.000000	.000000	.000000
353610	0.006748	0.006748	0.006748	.000000	.000000	.000000
353611	0.006748	0.006748	0.006748	.000000	.000000	.000000
363701	0.003374	0.003374	0.003374	.000000	.000000	.000000
363702	0.003374	0.003374	0.003374	.000000	.000000	.000000
363703	0.007147	0.007147	0.007147	.000000	.000000	.000000
363704	0.007147	0.007147	0.007147	.000000	.000000	.000000
363705	0.003374	0.003374	0.003374	.000000	.000000	.000000
363706	0.003374	0.003374	0.003374	.000000	.000000	.000000
373801	0.003374	0.003374	0.003374	.000000	.000000	.000000
373802	0.003609	0.003609	0.003609	.000000	.000000	.000000
383901	0.004371	0.004371	0.004371	.000000	.000000	.000000
394001	0.003374	0.003374	0.003374	.000000	.000000	.000000
394002	0.003374	0.003374	0.003374	.000000	.000000	.000000
394003	0.008434	0.008434	0.008434	.000000	.000000	.000000
394004	0.014765	0.014765	0.014765	.000000	.000000	.000000
394005	0.009705	0.009705	0.009705	.000000	.000000	.000000
394006	0.003374	0.003374	0.003374	.000000	.000000	.000000
394007	0.003376	0.003376	0.003376	.000000	.000000	.000000
404101	0.003374	0.003374	0.003374	.000000	.000000	.000000
404102	0.003374	0.003374	0.003374	.000000	.000000	.000000
404103	0.008434	0.008434	0.008434	.000000	.000000	.000000
404104	0.008434	0.008434	0.008434	.000000	.000000	.000000
404105	0.003374	0.003374	0.003374	.000000	.000000	.000000
404106	0.003373	0.003373	0.003373	.000000	.000000	.000000

T O T A L A S S E M B L E D J O I N T M A S S E S

IN GLOBAL COORDINATES

	UX	UY	UZ	RX	RY	RZ
TOTAL	0.336590	0.336590	0.336590	.000000	.000000	.000000

T O T A L A C C E L E R A T E D M A S S A N D L O C A T I O N

TOTAL MASS ACTIVATED BY ACCELERATION LOADS, IN GLOBAL COORDINATES

	UX	UY	UZ
MASS	0.336040	0.336040	0.336040
X-LOC	-656.299617	-656.299617	-656.299617
Y-LOC	1259.106	1259.106	1259.106
Z-LOC	-99.814835	-99.814835	-99.814835

Program SAP2000 Nonlinear Version 7.40 File: Thermal @ 105 & 60 degF @ 0.5K.OUT
Page
3

G L O B A L F O R C E B A L A N C E

TOTAL FORCE AND MOMENT AT THE ORIGIN, IN GLOBAL COORDINATES

LOAD LOAD1 ----------

	FX	FY	FZ	MX	MY	MZ
APPLIED	9.24E-14	5.68E-14	-129.748593	-163286.913	-85115.006	-6.29E-11
SPRINGS	-85.243526	114.302502	125.060665	174267.043	85484.229	-165180.826
REACTNS	85.243526	-114.302502	4.687928	-10980.130	-369.222828	165180.826
TOTAL	2.56E-13	4.26E-14	-2.49E-14	5.82E-11	-3.10E-11	-5.82E-11

LOAD LOAD2 ----------

	FX	FY	FZ	MX	MY	MZ
APPLIED	7.11E-15	-2.13E-14	-129.748593	-163286.913	-85115.006	-2.01E-11
SPRINGS	-48.702075	65.332655	125.278352	166949.120	83938.561	-94388.382
REACTNS	48.702075	-65.332655	4.470241	-3662.207	1176.445	94388.382
TOTAL	5.68E-14	1.42E-14	-1.78E-15	7.00E-11	-6.82E-13	1.46E-11

SAP2000 v7.40 File: RETURN LINE - THERMAL @ 105 & 60 DEGF @ 0.5K Kip-in Units PAGE 1
12/21/07 8:19:23

Sargent & Lundy LLC

S T A T I C L O A D C A S E S

STATIC CASE	CASE TYPE	SELF WT FACTOR
LOAD1	DEAD	1.0000
LOAD2	DEAD	1.0000

SAP2000 v7.40 File: RETURN LINE - THERMAL @ 105 & 60 DEGF @ 0.5K Kip-in Units PAGE 2
12/21/07 8:19:23

Sargent & Lundy LLC

J O I N T D A T A

JOINT	GLOBAL-X	GLOBAL-Y	GLOBAL-Z	RESTRAINTS	ANGLE-A	ANGLE-B	ANGLE-C
32	29.00000	0.00000	-42.00000	0 0 0 0 0 0	0.000	0.000	0.000
33	196.04000	0.00000	-42.00000	0 0 0 0 0 0	0.000	0.000	0.000
34	196.04000	101.40000	-84.00000	0 0 0 0 0 0	0.000	0.000	0.000
35	196.04000	288.36000	-84.00000	0 0 0 0 0 0	0.000	0.000	0.000
36	-951.52000	1435.92000	-84.00000	0 0 0 0 0 0	0.000	0.000	0.000
37	-951.52000	1768.44000	-84.00000	0 0 0 0 0 0	0.000	0.000	0.000
38	-1031.44000	1848.36000	-84.00000	0 0 0 0 0 0	0.000	0.000	0.000
39	-1078.00000	1895.04000	-150.00000	0 0 0 0 0 0	0.000	0.000	0.000
40	-1453.96000	2270.28000	-150.00000	0 0 0 0 0 0	0.000	0.000	0.000
41	-1453.96000	2693.52000	-150.00000	0 0 0 0 0 0	0.000	0.000	0.000
32A	0.00000	0.00000	-42.00000	1 1 1 1 1 1	0.000	0.000	0.000
32W	74.00000	0.00000	-42.00000	0 0 0 0 0 0	0.000	0.000	0.000
41A	-1453.96000	2707.52000	-150.00000	1 1 1 1 1 1	0.000	0.000	0.000
41W	-1453.96000	2630.27000	-150.00000	0 0 0 0 0 0	0.000	0.000	0.000
323302	88.04000	0.00000	-42.00000	0 0 0 0 0 0	0.000	0.000	0.000

323303	124.04000	0.00000	-42.00000	0	0	0	0	0	0	0.000	0.000	0.000
323304	160.04000	0.00000	-42.00000	0	0	0	0	0	0	0.000	0.000	0.000
333401	196.04000	33.26000	-55.78000	0	0	0	0	0	0	90.000	22.500	0.000
333402	196.04000	68.14000	-70.22000	0	0	0	0	0	0	90.000	22.500	0.000
343501	196.04000	137.40000	-84.00000	0	0	0	0	0	0	90.000	0.000	0.000
343502	196.04000	173.40000	-84.00000	0	0	0	0	0	0	90.000	0.000	0.000
343503	196.04000	209.40000	-84.00000	0	0	0	0	0	0	90.000	0.000	0.000
343504	196.04000	245.40000	-84.00000	0	0	0	0	0	0	90.000	0.000	0.000
353601	145.13000	339.27000	-84.00000	0	0	0	0	0	0	135.000	0.000	0.000
353602	94.22000	390.18000	-84.00000	0	0	0	0	0	0	135.000	0.000	0.000
353603	43.30000	441.10000	-84.00000	0	0	0	0	0	0	135.000	0.000	0.000
353604	-83.97000	568.37000	-84.00000	0	0	0	0	0	0	135.000	0.000	0.000
353605	-211.25000	695.65000	-84.00000	0	0	0	0	0	0	135.000	0.000	0.000
353606	-338.53000	822.93000	-84.00000	0	0	0	0	0	0	135.000	0.000	0.000
353607	-465.81000	950.21000	-84.00000	0	0	0	0	0	0	135.000	0.000	0.000
353608	-632.29000	1116.69000	-84.00000	0	0	0	0	0	0	135.000	0.000	0.000
353609	-798.77000	1283.17000	-84.00000	0	0	0	0	0	0	135.000	0.000	0.000
353610	-849.69000	1334.09000	-84.00000	0	0	0	0	0	0	135.000	0.000	0.000
353611	-900.60000	1385.00000	-84.00000	0	0	0	0	0	0	135.000	0.000	0.000
363701	-951.52000	1471.92000	-84.00000	0	0	0	0	0	0	90.000	0.000	0.000
363702	-951.52000	1507.92000	-84.00000	0	0	0	0	0	0	90.000	0.000	0.000
363703	-951.52000	1543.92000	-84.00000	0	0	0	0	0	0	90.000	0.000	0.000
363704	-951.52000	1660.44000	-84.00000	0	0	0	0	0	0	90.000	0.000	0.000
363705	-951.52000	1696.44000	-84.00000	0	0	0	0	0	0	90.000	0.000	0.000
363706	-951.52000	1732.44000	-84.00000	0	0	0	0	0	0	90.000	0.000	0.000
373801	-976.98000	1793.90000	-84.00000	0	0	0	0	0	0	135.000	0.000	0.000
373802	-1002.43000	1819.35000	-84.00000	0	0	0	0	0	0	135.000	0.000	0.000
383901	-1049.44000	1866.36000	-109.42000	0	0	0	0	0	0	135.000	45.000	0.000
394001	-1103.46000	1920.50000	-150.00000	0	0	0	0	0	0	135.000	0.000	0.000
394002	-1128.91000	1945.95000	-150.00000	0	0	0	0	0	0	135.000	0.000	0.000
394003	-1154.37000	1971.41000	-150.00000	0	0	0	0	0	0	135.000	0.000	0.000
394004	-1256.19000	2073.23000	-150.00000	0	0	0	0	0	0	135.000	0.000	0.000
394005	-1377.19000	2194.23000	-150.00000	0	0	0	0	0	0	135.000	0.000	0.000
394006	-1402.65000	2219.69000	-150.00000	0	0	0	0	0	0	135.000	0.000	0.000
394007	-1428.10000	2245.14000	-150.00000	0	0	0	0	0	0	135.000	0.000	0.000
404101	-1453.96000	2306.28000	-150.00000	0	0	0	0	0	0	90.000	0.000	0.000
404102	-1453.96000	2342.28000	-150.00000	0	0	0	0	0	0	90.000	0.000	0.000
404103	-1453.96000	2378.28000	-150.00000	0	0	0	0	0	0	90.000	0.000	0.000
404104	-1453.96000	2522.28000	-150.00000	0	0	0	0	0	0	90.000	0.000	0.000
404105	-1453.96000	2558.28000	-150.00000	0	0	0	0	0	0	90.000	0.000	0.000
404106	-1453.96000	2594.28000	-150.00000	0	0	0	0	0	0	90.000	0.000	0.000

SAP2000 v7.40 File: RETURN LINE - THERMAL @ 105 & 60 DEGF @ 0.5K Kip-in Units PAGE 3
12/21/07 8:19:23

Sargent & Lundy LLC

J O I N T S P R I N G D A T A

JOINT	K-U1	K-U2	K-U3	K-R1	K-R2	K-R3
323302	53.920	11.860	32.020	0.000	0.000	0.000
323303	60.650	13.340	36.020	0.000	0.000	0.000
323304	90.980	20.010	54.020	0.000	0.000	0.000
333401	92.460	20.330	54.900	0.000	0.000	0.000
333402	92.460	20.330	54.900	0.000	0.000	0.000
343501	90.980	20.010	54.020	0.000	0.000	0.000
343502	60.650	13.340	36.020	0.000	0.000	0.000
343503	60.650	13.340	36.020	0.000	0.000	0.000
343504	102.710	22.590	60.990	0.000	0.000	0.000
353601	181.960	40.020	108.500	0.000	0.000	0.000
353602	121.310	26.680	72.030	0.000	0.000	0.000
353603	212.290	46.690	126.060	0.000	0.000	0.000
353604	303.270	66.700	180.080	0.000	0.000	0.000
353605	303.270	66.700	180.080	0.000	0.000	0.000

353606	303.270	66.700	180.080	0.000	0.000	0.000
353607	349.970	76.970	207.820	0.000	0.000	0.000
353608	396.680	87.240	235.550	0.000	0.000	0.000
353609	258.990	56.960	153.790	0.000	0.000	0.000
353610	121.310	26.680	72.030	0.000	0.000	0.000
353611	181.960	40.020	108.500	0.000	0.000	0.000
363701	90.980	20.010	54.020	0.000	0.000	0.000
363702	60.650	13.340	36.020	0.000	0.000	0.000
363703	128.490	28.260	76.300	0.000	0.000	0.000
363704	128.490	28.260	76.300	0.000	0.000	0.000
363705	60.650	13.340	36.020	0.000	0.000	0.000
363706	90.980	20.010	54.020	0.000	0.000	0.000
373801	90.980	20.010	54.020	0.000	0.000	0.000
373802	99.470	21.880	59.070	0.000	0.000	0.000
383901	157.280	30.900	98.250	0.000	0.000	0.000
394001	90.980	20.010	54.020	0.000	0.000	0.000
394002	60.650	13.340	36.020	0.000	0.000	0.000
394003	151.640	33.350	90.040	0.000	0.000	0.000
394004	265.460	58.380	153.790	0.000	0.000	0.000
394005	174.480	38.370	103.610	0.000	0.000	0.000
394006	60.650	13.340	36.020	0.000	0.000	0.000
394007	90.980	20.010	54.020	0.000	0.000	0.000
404101	90.980	20.010	54.020	0.000	0.000	0.000
404102	60.650	13.340	36.020	0.000	0.000	0.000
404103	151.640	33.350	90.040	0.000	0.000	0.000
404104	151.640	33.350	90.040	0.000	0.000	0.000
404105	60.650	13.340	36.020	0.000	0.000	0.000
404106	90.980	20.010	54.020	0.000	0.000	0.000

SAP2000 v7.40 File: RETURN LINE - THERMAL @ 105 & 60 DEGF @ 0.5K Kip-in Units PAGE 4
12/21/07 8:19:23

Sargent & Lundy LLC

F R A M E E L E M E N T D A T A

FRAME	JNT-1	JNT-2	SECTION	ANGLE	RELEASES	SEGMENTS	R1	R2	FACTOR	LENGTH
1	32A	32	SSPIPE	0.000	000000	2	0.000	0.000	0.000	29.000
2	32	32W	PIPEDR9	0.000	000000	2	0.000	0.000	0.000	45.000
3	32W	323302	PIPEDR9	0.000	000000	2	0.000	0.000	0.000	14.040
4	323302	323303	PIPEDR9	0.000	000000	2	0.000	0.000	0.000	36.000
5	323303	323304	PIPEDR9	0.000	000000	2	0.000	0.000	0.000	36.000
6	323304	33	PIPEDR9	0.000	000000	2	0.000	0.000	0.000	36.000
7	33	333401	PIPEDR9	0.000	000000	2	0.000	0.000	0.000	36.002
8	333401	333402	PIPEDR9	0.000	000000	2	0.000	0.000	0.000	37.751
9	333402	34	PIPEDR9	0.000	000000	2	0.000	0.000	0.000	36.002
10	34	343501	PIPEDR9	0.000	000000	2	0.000	0.000	0.000	36.000
11	343501	343502	PIPEDR9	0.000	000000	2	0.000	0.000	0.000	36.000
12	343502	343503	PIPEDR9	0.000	000000	2	0.000	0.000	0.000	36.000
13	343503	343504	PIPEDR9	0.000	000000	2	0.000	0.000	0.000	36.000

14	343504	35	PIPEDR9	0.000	000000	2	0.000	0.000	0.000	42.960
15	35	353601	PIPEDR9	0.000	000000	2	0.000	0.000	0.000	71.998
16	353601	353602	PIPEDR9	0.000	000000	2	0.000	0.000	0.000	71.998
17	353602	353603	PIPEDR9	0.000	000000	2	0.000	0.000	0.000	72.012
18	353603	353604	PIPEDR9	0.000	000000	2	0.000	0.000	0.000	179.987
19	353604	353605	PIPEDR9	0.000	000000	2	0.000	0.000	0.000	180.001
20	353605	353606	PIPEDR9	0.000	000000	2	0.000	0.000	0.000	180.001
21	353606	353607	PIPEDR9	0.000	000000	2	0.000	0.000	0.000	180.001
22	353607	353608	PIPEDR9	0.000	000000	2	0.000	0.000	0.000	235.438
23	353608	353609	PIPEDR9	0.000	000000	2	0.000	0.000	0.000	235.438
24	353609	353610	PIPEDR9	0.000	000000	2	0.000	0.000	0.000	72.012
25	353610	353611	PIPEDR9	0.000	000000	2	0.000	0.000	0.000	71.998
26	353611	36	PIPEDR9	0.000	000000	2	0.000	0.000	0.000	72.012
27	36	363701	PIPEDR9	0.000	000000	2	0.000	0.000	0.000	36.000
28	363701	363702	PIPEDR9	0.000	000000	2	0.000	0.000	0.000	36.000
29	363702	363703	PIPEDR9	0.000	000000	2	0.000	0.000	0.000	36.000
30	363703	363704	PIPEDR9	0.000	000000	2	0.000	0.000	0.000	116.520
31	363704	363705	PIPEDR9	0.000	000000	2	0.000	0.000	0.000	36.000
32	363705	363706	PIPEDR9	0.000	000000	2	0.000	0.000	0.000	36.000
33	363706	37	PIPEDR9	0.000	000000	2	0.000	0.000	0.000	36.000
34	37	373801	PIPEDR9	0.000	000000	2	0.000	0.000	0.000	36.006
35	373801	373802	PIPEDR9	0.000	000000	2	0.000	0.000	0.000	35.992
36	373802	38	PIPEDR9	0.000	000000	2	0.000	0.000	0.000	41.026
37	38	383901	PIPEDR9	0.000	000000	2	0.000	0.000	0.000	35.975
38	383901	39	PIPEDR9	0.000	000000	2	0.000	0.000	0.000	57.315
39	39	394001	PIPEDR9	0.000	000000	2	0.000	0.000	0.000	36.006
40	394001	394002	PIPEDR9	0.000	000000	2	0.000	0.000	0.000	35.992
41	394002	394003	PIPEDR9	0.000	000000	2	0.000	0.000	0.000	36.006
42	394003	394004	PIPEDR9	0.000	000000	2	0.000	0.000	0.000	143.995
43	394004	394005	PIPEDR9	0.000	000000	2	0.000	0.000	0.000	171.120
44	394005	394006	PIPEDR9	0.000	000000	2	0.000	0.000	0.000	36.006
45	394006	394007	PIPEDR9	0.000	000000	2	0.000	0.000	0.000	35.992
46	394007	40	PIPEDR9	0.000	000000	2	0.000	0.000	0.000	36.066

47	40	404101	PIPEDR9	0.000	000000	2	0.000	0.000	0.000	36.000
48	404101	404102	PIPEDR9	0.000	000000	2	0.000	0.000	0.000	36.000
49	404102	404103	PIPEDR9	0.000	000000	2	0.000	0.000	0.000	36.000
50	404103	404104	PIPEDR9	0.000	000000	2	0.000	0.000	0.000	144.000
51	404104	404105	PIPEDR9	0.000	000000	2	0.000	0.000	0.000	36.000
52	404105	404106	PIPEDR9	0.000	000000	2	0.000	0.000	0.000	36.000
53	404106	41W	PIPEDR9	0.000	000000	2	0.000	0.000	0.000	35.990
54	41W	41	PIPEDR9	0.000	000000	2	0.000	0.000	0.000	63.250
55	41	41A	SSPIPE	0.000	000000	2	0.000	0.000	0.000	14.000

SAP2000 v7.40 File: RETURN LINE - THERMAL @ 105 & 60 DEGF @ 0.5K Kip-in Units PAGE 5
12/21/07 8:19:23

Sargent & Lundy LLC

M A T E R I A L P R O P E R T Y D A T A

MAT LABEL	MODULUS OF ELASTICITY	POISSON'S RATIO	THERMAL COEFF	WEIGHT PER UNIT VOL	MASS PER UNIT VOL
PE	28.000	0.420	1.000E-04	9.290E-05	2.410E-07
SSTEEL	28300.000	0.300	6.500E-06	2.830E-04	7.324E-07
CONC	3600.000	0.200	5.500E-06	8.680E-05	2.246E-07
STEEL	29000.000	0.300	6.500E-06	2.830E-04	7.324E-07

SAP2000 v7.40 File: RETURN LINE - THERMAL @ 105 & 60 DEGF @ 0.5K Kip-in Units PAGE 6
12/21/07 8:19:23

Sargent & Lundy LLC

M A T E R I A L D E S I G N D A T A

MAT LABEL	DESIGN CODE	STEEL FY	CONCRETE FC	REBAR FY	CONCRETE FCS	REBAR FYS
PE	N					
SSTEEL	S	36.000				
CONC	C		4.000	60.000	4.000	40.000
STEEL	S	36.000				

SAP2000 v7.40 File: RETURN LINE - THERMAL @ 105 & 60 DEGF @ 0.5K Kip-in Units PAGE 7
12/21/07 8:19:23

Sargent & Lundy LLC

F R A M E S E C T I O N P R O P E R T Y D A T A

SECTION LABEL	MAT LABEL	SECTION TYPE	DEPTH	FLANGE WIDTH TOP	FLANGE THICK TOP	WEB THICK	FLANGE WIDTH BOTTOM	FLANGE THICK BOTTOM

PIPEDR9	PE	36.000	36.000	3.850	3.850	0.000
0.000						
SSPIPE	SSTEEL	30.000	30.000	0.375	0.375	0.000
0.000						

SAP2000 v7.40 File: RETURN LINE - THERMAL @ 105 & 60 DEGF @ 0.5K Kip-in Units PAGE 8
12/21/07 8:19:23

Sargent & Lundy LLC

F R A M E S E C T I O N P R O P E R T Y D A T A

SECTION LABEL	AREA	TORSIONAL INERTIA	MOMENTS OF INERTIA I33	I22	SHEAR AREAS A2	A3
PIPEDR9	388.858	101924.203	50962.090	50962.090	227.698	227.698
SSPIPE	34.901	7658.890	3829.445	3829.445	17.800	17.800

SAP2000 v7.40 File: RETURN LINE - THERMAL @ 105 & 60 DEGF @ 0.5K Kip-in Units PAGE 9
12/21/07 8:19:23

Sargent & Lundy LLC

F R A M E S E C T I O N P R O P E R T Y D A T A

SECTION LABEL	SECTION MODULII S33	S22	PLASTIC MODULII Z33	Z22	RADII OF GYRATION R33	R22
PIPEDR9	2831.227	2831.227	3998.469	3998.469	11.448	11.448
SSPIPE	255.296	255.296	329.133	329.133	10.475	10.475

SAP2000 v7.40 File: RETURN LINE - THERMAL @ 105 & 60 DEGF @ 0.5K Kip-in Units PAGE 10
12/21/07 8:19:23

Sargent & Lundy LLC

F R A M E S E C T I O N P R O P E R T Y D A T A

SECTION LABEL	TOTAL WEIGHT	TOTAL MASS
PIPEDR9	129.324	0.335
SSPIPE	0.425	1.099E-03

SAP2000 v7.40 File: RETURN LINE - THERMAL @ 105 & 60 DEGF @ 0.5K Kip-in Units PAGE 11
12/21/07 8:19:23

Sargent & Lundy LLC

S H E L L S E C T I O N P R O P E R T Y D A T A

SECTION LABEL	MAT LABEL	SHELL TYPE	MEMBRANE THICK	BENDING THICK	MATERIAL ANGLE
SSEC1	SSTEEL	4	1.000	1.000	0.000

SAP2000 v7.40 File: RETURN LINE - THERMAL @ 105 & 60 DEGF @ 0.5K Kip-in Units PAGE 12
12/21/07 8:19:23

Sargent & Lundy LLC

S H E L L S E C T I O N P R O P E R T Y D A T A

SECTION LABEL	TOTAL WEIGHT	TOTAL MASS
SSEC1	0.000	0.000

SAP2000 v7.40 File: RETURN LINE - THERMAL @ 105 & 60 DEGF @ 0.5K Kip-in Units PAGE 13
12/21/07 8:19:23

Sargent & Lundy LLC

F R A M E T H E R M A L L O A D S Load Case LOAD1

FRAME	TYPE	VALUE	PATTERN	MULTIPLIER
1	TEMPERATURE	105.0000		
2	TEMPERATURE	105.0000		
3	TEMPERATURE	105.0000		
4	TEMPERATURE	105.0000		
5	TEMPERATURE	105.0000		
6	TEMPERATURE	105.0000		
7	TEMPERATURE	105.0000		
8	TEMPERATURE	105.0000		
9	TEMPERATURE	105.0000		
10	TEMPERATURE	105.0000		
11	TEMPERATURE	105.0000		
12	TEMPERATURE	105.0000		
13	TEMPERATURE	105.0000		
14	TEMPERATURE	105.0000		
15	TEMPERATURE	105.0000		
16	TEMPERATURE	105.0000		
17	TEMPERATURE	105.0000		
18	TEMPERATURE	105.0000		
19	TEMPERATURE	105.0000		
20	TEMPERATURE	105.0000		
21	TEMPERATURE	105.0000		
22	TEMPERATURE	105.0000		
23	TEMPERATURE	105.0000		
24	TEMPERATURE	105.0000		
25	TEMPERATURE	105.0000		
26	TEMPERATURE	105.0000		
27	TEMPERATURE	105.0000		
28	TEMPERATURE	105.0000		
29	TEMPERATURE	105.0000		
30	TEMPERATURE	105.0000		
31	TEMPERATURE	105.0000		
32	TEMPERATURE	105.0000		
33	TEMPERATURE	105.0000		
34	TEMPERATURE	105.0000		
35	TEMPERATURE	105.0000		
36	TEMPERATURE	105.0000		
37	TEMPERATURE	105.0000		
38	TEMPERATURE	105.0000		
39	TEMPERATURE	105.0000		
40	TEMPERATURE	105.0000		
41	TEMPERATURE	105.0000		
42	TEMPERATURE	105.0000		
43	TEMPERATURE	105.0000		
44	TEMPERATURE	105.0000		
45	TEMPERATURE	105.0000		
46	TEMPERATURE	105.0000		
47	TEMPERATURE	105.0000		
48	TEMPERATURE	105.0000		
49	TEMPERATURE	105.0000		

50	TEMPERATURE	105.0000
51	TEMPERATURE	105.0000
52	TEMPERATURE	105.0000
53	TEMPERATURE	105.0000
54	TEMPERATURE	105.0000
55	TEMPERATURE	105.0000

SAP2000 v7.40 File: RETURN LINE - THERMAL @ 105 & 60 DEGF @ 0.5K Kip-in Units PAGE 14
12/21/07 8:19:23

Sargent & Lundy LLC

F R A M E T H E R M A L L O A D S Load Case LOAD2

FRAME	TYPE	VALUE	PATTERN	MULTIPLIER
1	TEMPERATURE	60.0000		
2	TEMPERATURE	60.0000		
3	TEMPERATURE	60.0000		
4	TEMPERATURE	60.0000		
5	TEMPERATURE	60.0000		
6	TEMPERATURE	60.0000		
7	TEMPERATURE	60.0000		
8	TEMPERATURE	60.0000		
9	TEMPERATURE	60.0000		
10	TEMPERATURE	60.0000		
11	TEMPERATURE	60.0000		
12	TEMPERATURE	60.0000		
13	TEMPERATURE	60.0000		
14	TEMPERATURE	60.0000		
15	TEMPERATURE	60.0000		
16	TEMPERATURE	60.0000		
17	TEMPERATURE	60.0000		
18	TEMPERATURE	60.0000		
19	TEMPERATURE	60.0000		
20	TEMPERATURE	60.0000		
21	TEMPERATURE	60.0000		
22	TEMPERATURE	60.0000		
23	TEMPERATURE	60.0000		
24	TEMPERATURE	60.0000		
25	TEMPERATURE	60.0000		
26	TEMPERATURE	60.0000		
27	TEMPERATURE	60.0000		
28	TEMPERATURE	60.0000		
29	TEMPERATURE	60.0000		
30	TEMPERATURE	60.0000		
31	TEMPERATURE	60.0000		
32	TEMPERATURE	60.0000		
33	TEMPERATURE	60.0000		
34	TEMPERATURE	60.0000		
35	TEMPERATURE	60.0000		
36	TEMPERATURE	60.0000		
37	TEMPERATURE	60.0000		
38	TEMPERATURE	60.0000		
39	TEMPERATURE	60.0000		
40	TEMPERATURE	60.0000		
41	TEMPERATURE	60.0000		
42	TEMPERATURE	60.0000		
43	TEMPERATURE	60.0000		
44	TEMPERATURE	60.0000		
45	TEMPERATURE	60.0000		
46	TEMPERATURE	60.0000		
47	TEMPERATURE	60.0000		
48	TEMPERATURE	60.0000		
49	TEMPERATURE	60.0000		

50	TEMPERATURE	60.0000
51	TEMPERATURE	60.0000
52	TEMPERATURE	60.0000
53	TEMPERATURE	60.0000
54	TEMPERATURE	60.0000
55	TEMPERATURE	60.0000

SAP2000 v7.40 File: RETURN LINE - THERMAL @ 105 & 60 DEGF @ 0.5K Kip-in Units PAGE 1
12/20/07 17:31:32

Sargent & Lundy LLC

J O I N T D I S P L A C E M E N T S

JOINT	LOAD	U1	U2	U3	R1	R2	R3
32	LOAD1	0.0173	-7.457E-05	-6.292E-04	-3.334E-06	1.711E-05	-1.099E-05
32	LOAD2	9.882E-03	-3.815E-05	-5.805E-04	-1.334E-06	1.627E-05	-6.168E-06
33	LOAD1	0.8289	-0.7007	0.2252	-1.596E-03	3.688E-04	6.367E-04
33	LOAD2	0.4739	-0.4075	0.0978	-6.386E-04	5.412E-04	2.384E-04
34	LOAD1	-0.0365	-0.2663	-0.5852	-4.853E-04	5.171E-03	1.677E-03
34	LOAD2	-0.0254	-0.1535	-0.3527	-2.542E-04	3.558E-03	8.508E-04
35	LOAD1	1.5953	0.5660	-0.1419	-1.906E-03	3.863E-03	-2.396E-03
35	LOAD2	0.9116	0.3233	-0.1413	-1.734E-03	3.380E-03	-1.367E-03
36	LOAD1	-1.5626	-0.5673	-0.0973	7.684E-04	-9.511E-04	-2.539E-03
36	LOAD2	-0.8929	-0.3242	-0.1032	9.234E-04	-1.330E-03	-1.451E-03
37	LOAD1	1.0886	0.5742	-0.0824	7.009E-04	2.927E-03	1.001E-03
37	LOAD2	0.6226	0.3279	-0.0702	3.294E-04	1.825E-03	5.683E-04
38	LOAD1	-0.2488	0.2312	0.6762	-1.505E-03	-5.764E-03	5.454E-03
38	LOAD2	-0.1406	0.1318	0.3701	-8.995E-04	-3.243E-03	3.102E-03
39	LOAD1	0.4120	-0.3687	-1.0181	1.219E-03	-3.472E-03	1.392E-03
39	LOAD2	0.2366	-0.2125	-0.6008	7.147E-04	-1.959E-03	7.879E-04
40	LOAD1	-1.3033	-0.5482	-0.0620	6.039E-04	-1.395E-03	1.386E-04
40	LOAD2	-0.7447	-0.3132	-0.0588	4.891E-04	-1.157E-03	7.921E-05
41	LOAD1	-1.189E-05	-7.942E-03	-2.200E-04	7.915E-06	0.0000	0.0000
41	LOAD2	-6.795E-06	-4.538E-03	-2.200E-04	7.915E-06	0.0000	0.0000
32A	LOAD1	0.0000	0.0000	0.0000	0.0000	0.0000	0.0000
32A	LOAD2	0.0000	0.0000	0.0000	0.0000	0.0000	0.0000
32W	LOAD1	0.1380	-0.0301	-0.0319	-4.325E-04	-9.930E-05	-1.893E-03
32W	LOAD2	0.0789	-0.0169	-0.0298	-1.730E-04	5.568E-05	-1.088E-03
41A	LOAD1	0.0000	0.0000	0.0000	0.0000	0.0000	0.0000
41A	LOAD2	0.0000	0.0000	0.0000	0.0000	0.0000	0.0000
41W	LOAD1	-3.664E-03	-0.0110	-0.0469	1.072E-04	-2.090E-04	4.401E-05
41W	LOAD2	-2.094E-03	-6.281E-03	-0.0469	1.072E-04	-1.733E-04	2.515E-05
323302	LOAD1	0.1756	-0.0586	-0.0301	-5.664E-04	-3.874E-04	-2.626E-03
323302	LOAD2	0.1004	-0.0333	-0.0295	-2.266E-04	-1.206E-04	-1.514E-03
323303	LOAD1	0.3035	-0.1907	-3.709E-03	-9.097E-04	-1.388E-03	-4.508E-03
323303	LOAD2	0.1735	-0.1094	-0.0161	-3.639E-04	-6.893E-04	-2.620E-03
323304	LOAD1	0.4922	-0.4142	0.0759	-1.253E-03	-2.130E-03	-5.060E-03

323304	LOAD2	0.2814	-0.2392	0.0264	-5.013E-04	-9.899E-04	-2.981E-03
333401	LOAD1	-0.3988	-0.4551	-0.0909	1.422E-03	3.006E-03	7.036E-03
333401	LOAD2	-0.2231	-0.2602	-0.0686	1.246E-03	1.506E-03	4.047E-03
333402	LOAD1	-0.1773	-0.1428	-0.2674	2.810E-03	5.307E-03	6.100E-03
333402	LOAD2	-0.0964	-0.0805	-0.1661	2.124E-03	2.996E-03	3.556E-03
343501	LOAD1	-0.1123	0.0486	-0.2522	4.919E-03	-4.661E-03	-1.333E-03
343501	LOAD2	-0.0650	0.0291	-0.1575	3.524E-03	-2.712E-03	-8.277E-04
343502	LOAD1	7.851E-03	-0.0425	-0.0891	4.667E-03	-2.923E-03	-5.074E-03
343502	LOAD2	3.980E-03	-0.0243	-0.0633	3.490E-03	-1.640E-03	-2.928E-03
343503	LOAD1	0.1296	-0.2954	-0.0320	4.415E-03	-7.660E-04	-9.731E-03
343503	LOAD2	0.0737	-0.1692	-0.0319	3.455E-03	-2.458E-04	-5.567E-03
343504	LOAD1	0.2773	-0.7695	-0.0428	4.163E-03	1.011E-03	-0.0133
343504	LOAD2	0.1583	-0.4399	-0.0469	3.421E-03	1.093E-03	-7.572E-03
353601	LOAD1	-0.2606	-0.4094	-0.0323	3.844E-03	-8.435E-04	0.0117
353601	LOAD2	-0.1489	-0.2339	-0.0333	3.385E-03	-8.479E-04	6.697E-03
353602	LOAD1	-0.1069	0.0135	-0.0225	3.609E-03	2.745E-05	2.793E-03
353602	LOAD2	-0.0611	7.718E-03	-0.0227	3.154E-03	2.011E-05	1.596E-03
353603	LOAD1	-0.0389	0.0312	-0.0392	3.374E-03	1.354E-03	-7.410E-05
353603	LOAD2	-0.0222	0.0178	-0.0392	2.923E-03	1.353E-03	-4.238E-05
353604	LOAD1	-5.667E-03	7.401E-04	-0.0376	2.787E-03	-3.194E-04	-1.130E-04
353604	LOAD2	-3.239E-03	4.227E-04	-0.0376	2.345E-03	-3.191E-04	-6.457E-05
353605	LOAD1	-8.181E-04	-2.951E-04	-0.0361	2.200E-03	1.226E-04	2.196E-05
353605	LOAD2	-4.676E-04	-1.686E-04	-0.0361	1.767E-03	1.225E-04	1.254E-05
353606	LOAD1	-7.102E-05	1.526E-05	-0.0346	1.613E-03	-3.256E-04	-6.060E-06
353606	LOAD2	-4.060E-05	8.713E-06	-0.0346	1.189E-03	-3.256E-04	-3.462E-06
353607	LOAD1	3.200E-04	1.120E-04	-0.0361	1.025E-03	1.441E-03	1.482E-05
353607	LOAD2	1.829E-04	6.400E-05	-0.0361	6.116E-04	1.441E-03	8.471E-06
353608	LOAD1	3.253E-03	-2.095E-04	-0.0384	2.572E-04	2.762E-04	-6.894E-05
353608	LOAD2	1.859E-03	-1.197E-04	-0.0384	-1.441E-04	2.768E-04	-3.939E-05
353609	LOAD1	0.0341	-0.0262	-0.0422	-5.110E-04	-2.586E-03	-6.864E-05
353609	LOAD2	0.0195	-0.0150	-0.0421	-8.999E-04	-2.588E-03	-3.922E-05
353610	LOAD1	0.1019	-0.0114	-0.0169	-7.460E-04	1.772E-05	2.731E-03
353610	LOAD2	0.0582	-6.499E-03	-0.0166	-1.131E-03	1.594E-05	1.561E-03
353611	LOAD1	0.2515	0.4052	-0.0319	-9.809E-04	6.054E-04	0.0115
353611	LOAD2	0.1437	0.2316	-0.0319	-1.362E-03	6.449E-04	6.598E-03
363701	LOAD1	-0.3305	0.8728	-0.0474	-5.312E-04	-7.218E-04	-0.0125
363701	LOAD2	-0.1888	0.4987	-0.0486	-9.884E-04	-8.098E-04	-7.168E-03
363702	LOAD1	-0.1930	0.3721	-0.0327	-1.113E-04	-1.332E-04	-0.0102
363702	LOAD2	-0.1103	0.2127	-0.0325	-6.468E-04	-1.623E-04	-5.846E-03
363703	LOAD1	-0.0942	0.0864	-0.0373	3.086E-04	4.797E-04	-5.783E-03
363703	LOAD2	-0.0538	0.0494	-0.0371	-3.052E-04	4.768E-04	-3.304E-03
363704	LOAD1	0.0961	-0.1017	-0.0402	1.668E-03	-4.349E-04	-3.817E-03
363704	LOAD2	0.0549	-0.0581	-0.0395	8.004E-04	-4.826E-04	-2.183E-03
363705	LOAD1	0.1958	-0.2994	-0.0395	2.088E-03	7.076E-05	-6.854E-03

363705	LOAD2	0.1118	-0.1712	-0.0361	1.142E-03	-2.528E-06	-3.920E-03
363706	LOAD1	0.3346	-0.6439	-0.0531	2.507E-03	2.382E-04	-7.803E-03
363706	LOAD2	0.1911	-0.3682	-0.0453	1.484E-03	2.221E-04	-4.464E-03
373801	LOAD1	-0.1238	-0.6559	0.0303	1.133E-04	-4.430E-03	9.676E-03
373801	LOAD2	-0.0713	-0.3750	2.185E-03	1.927E-04	-2.629E-03	5.526E-03
373802	LOAD1	0.0788	-0.2483	0.2528	-1.347E-03	-5.599E-03	8.450E-03
373802	LOAD2	0.0443	-0.1422	0.1314	-6.718E-04	-3.207E-03	4.821E-03
383901	LOAD1	-0.0121	0.0238	1.828E-03	-4.950E-03	0.0161	3.994E-05
383901	LOAD2	2.283E-03	0.0137	-7.929E-03	-2.791E-03	9.249E-03	4.192E-05
394001	LOAD1	-0.3274	-3.478E-04	-0.4346	-3.189E-03	-8.154E-03	6.616E-04
394001	LOAD2	-0.1883	-2.910E-05	-0.2616	-1.842E-03	-4.708E-03	3.724E-04
394002	LOAD1	-0.2013	9.387E-03	-0.1407	-3.060E-03	-5.450E-03	2.603E-04
394002	LOAD2	-0.1158	5.393E-03	-0.0927	-1.793E-03	-3.041E-03	1.457E-04
394003	LOAD1	-0.1156	0.0120	-0.0268	-2.932E-03	-2.078E-03	1.339E-04
394003	LOAD2	-0.0665	6.816E-03	-0.0311	-1.745E-03	-8.751E-04	7.517E-05
394004	LOAD1	-4.591E-03	-0.0189	-0.0355	-2.419E-03	1.181E-03	-1.090E-03
394004	LOAD2	-2.710E-03	-0.0108	-0.0377	-1.550E-03	9.160E-04	-6.225E-04
394005	LOAD1	0.1082	0.0345	-0.0422	-1.808E-03	-1.406E-03	5.795E-03
394005	LOAD2	0.0618	0.0197	-0.0418	-1.319E-03	-1.370E-03	3.311E-03
394006	LOAD1	0.1943	0.3100	-0.0248	-1.680E-03	-2.960E-04	9.117E-03
394006	LOAD2	0.1110	0.1771	-0.0250	-1.270E-03	-2.979E-04	5.210E-03
394007	LOAD1	0.3194	0.7425	-0.0315	-1.552E-03	3.581E-04	0.0102
394007	LOAD2	0.1825	0.4243	-0.0311	-1.222E-03	3.131E-04	5.839E-03
404101	LOAD1	-0.3263	0.7531	-0.0331	-1.277E-03	-3.718E-04	-0.0100
404101	LOAD2	-0.1865	0.4303	-0.0327	-1.059E-03	-3.164E-04	-5.731E-03
404102	LOAD1	-0.2027	0.3206	-0.0276	-1.158E-03	1.861E-04	-9.024E-03
404102	LOAD2	-0.1158	0.1832	-0.0279	-9.602E-04	2.027E-04	-5.157E-03
404103	LOAD1	-0.1197	0.0477	-0.0408	-1.039E-03	9.872E-04	-5.630E-03
404103	LOAD2	-0.0684	0.0272	-0.0411	-8.618E-04	9.902E-04	-3.217E-03
404104	LOAD1	-0.0275	-0.0335	-0.0421	-5.648E-04	-9.855E-04	8.663E-04
404104	LOAD2	-0.0157	-0.0191	-0.0421	-4.684E-04	-9.871E-04	4.950E-04
404105	LOAD1	-0.0183	-9.148E-03	-0.0300	-4.462E-04	-2.595E-04	5.049E-04
404105	LOAD2	-0.0105	-5.227E-03	-0.0300	-3.700E-04	-2.600E-04	2.885E-04
404106	LOAD1	-0.0127	1.184E-03	-0.0327	-3.276E-04	7.027E-05	2.159E-04
404106	LOAD2	-7.273E-03	6.764E-04	-0.0327	-2.716E-04	7.014E-05	1.233E-04

SAP2000 v7.40 File: RETURN LINE - THERMAL @ 105 & 60 DEGF @ 0.5K Kip-in Units PAGE 2
12/20/07 17:31:32

Sargent & Lundy LLC

F R A M E E L E M E N T F O R C E S

FRAME	LOAD	LOC	P	V2	V3	T	M2	M3
1	LOAD1							
		0.00	-85.13	-2.41	-5.031E-01	-9.58	33.76	-97.43

	14.50	-85.13	-2.26	-5.031E-01	-9.58	41.06	-63.58
	29.00	-85.13	-2.12	-5.031E-01	-9.58	48.35	-31.81
1 LOAD2							
	0.00	-48.64	-2.19	-3.044E-01	-3.83	18.63	-91.17
	14.50	-48.64	-2.05	-3.044E-01	-3.83	23.05	-60.47
	29.00	-48.64	-1.90	-3.044E-01	-3.83	27.46	-31.85
2 LOAD1							
	0.00	-85.13	-2.12	-5.031E-01	-9.58	48.35	-31.81
	22.50	-85.13	-1.31	-5.031E-01	-9.58	59.67	6.74
	45.00	-85.13	-4.940E-01	-5.031E-01	-9.58	70.99	27.00
2 LOAD2							
	0.00	-48.64	-1.90	-3.044E-01	-3.83	27.46	-31.85
	22.50	-48.64	-1.09	-3.044E-01	-3.83	34.31	1.80
	45.00	-48.64	-2.764E-01	-3.044E-01	-3.83	41.16	17.16
3 LOAD1							
	0.00	-85.13	-4.940E-01	-5.031E-01	-9.58	70.99	27.00
	7.02	-85.13	-2.404E-01	-5.031E-01	-9.58	74.53	29.58
	14.04	-85.13	1.321E-02	-5.031E-01	-9.58	78.06	30.37
3 LOAD2							
	0.00	-48.64	-2.764E-01	-3.044E-01	-3.83	41.16	17.16
	7.02	-48.64	-2.283E-02	-3.044E-01	-3.83	43.30	18.21
	14.04	-48.64	2.308E-01	-3.044E-01	-3.83	45.44	17.48
4 LOAD1							
	0.00	-75.66	-9.492E-01	1.924E-01	-9.58	78.06	30.37
	18.00	-75.66	-2.989E-01	1.924E-01	-9.58	74.59	41.61
	36.00	-75.66	3.513E-01	1.924E-01	-9.58	71.13	41.13
4 LOAD2							
	0.00	-43.22	-7.145E-01	8.999E-02	-3.83	45.44	17.48
	18.00	-43.22	-6.425E-02	8.999E-02	-3.83	43.82	24.49
	36.00	-43.22	5.860E-01	8.999E-02	-3.83	42.20	19.80
5 LOAD1							
	0.00	-57.25	2.177E-01	2.74	-9.58	71.13	41.13
	18.00	-57.25	8.680E-01	2.74	-9.58	21.88	31.36
	36.00	-57.25	1.52	2.74	-9.58	-27.36	9.89
5 LOAD2							
	0.00	-32.70	4.345E-03	1.55	-3.83	42.20	19.80
	18.00	-32.70	6.546E-01	1.55	-3.83	14.32	13.87
	36.00	-32.70	1.30	1.55	-3.83	-13.56	-3.77
6 LOAD1							
	0.00	-12.47	5.62	11.02	-9.58	-27.36	9.89
	18.00	-12.47	6.27	11.02	-9.58	-225.80	-97.09
	36.00	-12.47	6.92	11.02	-9.58	-424.25	-215.77
6 LOAD2							
	0.00	-7.10	2.73	6.34	-3.83	-13.56	-3.77
	18.00	-7.10	3.38	6.34	-3.83	-127.61	-58.74
	36.00	-7.10	4.03	6.34	-3.83	-241.65	-125.41
7 LOAD1							
	0.00	-12.83	2.17	-12.47	36.96	-474.53	-9.58
	18.00	-13.08	2.77	-12.47	36.96	-249.98	-54.09
	36.00	-13.33	3.37	-12.47	36.96	-25.44	-109.40
7 LOAD2							
	0.00	-7.40	1.30	-7.10	23.37	-271.25	-3.83
	18.00	-7.64	1.90	-7.10	23.37	-143.45	-32.59
	36.00	-7.89	2.50	-7.10	23.37	-15.65	-72.17
8 LOAD1							
	0.00	-50.20	-1.61	-3.22	36.96	-25.43	-109.40
	18.88	-50.46	-9.789E-01	-3.22	36.96	35.39	-84.98
	37.75	-50.72	-3.488E-01	-3.22	36.96	96.21	-72.45
8 LOAD2							

	0.00	-28.53	-1.26	-1.81	23.37	-15.64	-72.17
	18.88	-28.79	-6.295E-01	-1.81	23.37	18.53	-54.34
	37.75	-29.05	4.867E-04	-1.81	23.37	52.71	-48.40
9	LOAD1						
	0.00	-67.11	-15.04	-3.180E-01	36.99	96.20	-72.45
	18.00	-67.36	-14.44	-3.180E-01	36.99	101.92	192.91
	36.00	-67.61	-13.84	-3.180E-01	36.99	107.65	447.46
9	LOAD2						
	0.00	-37.96	-9.13	-1.734E-01	23.39	52.70	-48.40
	18.00	-38.21	-8.53	-1.734E-01	23.39	55.82	110.49
	36.00	-38.46	-7.93	-1.734E-01	23.39	58.95	258.56
10	LOAD1						
	0.00	-67.76	13.09	-3.180E-01	-7.03	113.61	447.46
	18.00	-67.76	13.74	-3.180E-01	-7.03	119.33	205.94
	36.00	-67.76	14.39	-3.180E-01	-7.03	125.06	-47.28
10	LOAD2						
	0.00	-38.57	7.40	-1.734E-01	-9.583E-01	63.41	258.56
	18.00	-38.57	8.05	-1.734E-01	-9.583E-01	66.53	119.53
	36.00	-38.57	8.70	-1.734E-01	-9.583E-01	69.65	-31.22
11	LOAD1						
	0.00	-77.98	7.668E-01	-1.29	-7.03	125.06	-47.28
	18.00	-77.98	1.42	-1.29	-7.03	148.29	-66.93
	36.00	-77.98	2.07	-1.29	-7.03	171.53	-98.29
11	LOAD2						
	0.00	-44.48	1.936E-01	-7.554E-01	-9.583E-01	69.65	-31.22
	18.00	-44.48	8.438E-01	-7.554E-01	-9.583E-01	83.25	-40.55
	36.00	-44.48	1.49	-7.554E-01	-9.583E-01	96.85	-61.59
12	LOAD1						
	0.00	-77.50	-1.14	-7.240E-01	-7.03	171.53	-98.29
	18.00	-77.50	-4.929E-01	-7.240E-01	-7.03	184.56	-83.57
	36.00	-77.50	1.573E-01	-7.240E-01	-7.03	197.59	-80.55
12	LOAD2						
	0.00	-44.23	-7.860E-01	-4.306E-01	-9.583E-01	96.85	-61.59
	18.00	-44.23	-1.357E-01	-4.306E-01	-9.583E-01	104.60	-53.30
	36.00	-44.23	5.145E-01	-4.306E-01	-9.583E-01	112.35	-56.71
13	LOAD1						
	0.00	-69.64	-9.943E-01	3.22	-7.03	197.59	-80.55
	18.00	-69.64	-3.440E-01	3.22	-7.03	139.70	-68.50
	36.00	-69.64	3.062E-01	3.22	-7.03	81.80	-68.16
13	LOAD2						
	0.00	-39.76	-6.347E-01	1.83	-9.583E-01	112.35	-56.71
	18.00	-39.76	1.553E-02	1.83	-9.583E-01	79.48	-51.14
	36.00	-39.76	6.658E-01	1.83	-9.583E-01	46.61	-57.27
14	LOAD1						
	0.00	-41.16	-2.31	20.60	-7.03	81.80	-68.16
	21.48	-41.16	-1.53	20.60	-7.03	-360.67	-26.94
	42.96	-41.16	-7.549E-01	20.60	-7.03	-803.15	-2.39
14	LOAD2						
	0.00	-23.51	-2.19	11.76	-9.583E-01	46.61	-57.27
	21.48	-23.51	-1.42	11.76	-9.583E-01	-206.10	-18.50
	42.96	-23.51	-6.410E-01	11.76	-9.583E-01	-458.80	3.60
15	LOAD1						
	0.00	-43.67	-7.549E-01	-14.54	-3.28	-803.15	-6.67
	36.00	-43.67	5.456E-01	-14.54	-3.28	-279.82	-2.90
	72.00	-43.67	1.85	-14.54	-3.28	243.51	-45.95
15	LOAD2						
	0.00	-24.94	-6.410E-01	-8.30	-3.23	-458.80	1.87
	36.00	-24.94	6.595E-01	-8.30	-3.23	-159.83	1.54
	72.00	-24.94	1.96	-8.30	-3.23	139.13	-45.61

16	LOAD1						
	0.00	-91.08	-1.66	1.85	-3.28	243.51	-45.95
	36.00	-91.08	-3.633E-01	1.85	-3.28	176.96	-9.46
	72.00	-91.08	9.371E-01	1.85	-3.28	110.41	-19.79
16	LOAD2						
	0.00	-52.04	-1.66	1.06	-3.23	139.13	-45.61
	36.00	-52.04	-3.557E-01	1.06	-3.23	101.11	-9.40
	72.00	-52.04	9.448E-01	1.06	-3.23	63.08	-20.00
17	LOAD1						
	0.00	-104.05	-6.867E-01	1.49	-3.28	110.41	-19.79
	36.01	-104.05	6.140E-01	1.49	-3.28	56.82	-18.48
	72.01	-104.05	1.91	1.49	-3.28	3.22	-64.00
17	LOAD2						
	0.00	-59.45	-6.894E-01	8.504E-01	-3.23	63.08	-20.00
	36.01	-59.45	6.113E-01	8.504E-01	-3.23	32.46	-18.60
	72.01	-59.45	1.91	8.504E-01	-3.23	1.84	-64.03
18	LOAD1						
	0.00	-112.31	-3.03	3.234E-02	-3.28	3.22	-64.00
	89.99	-112.31	2.251E-01	3.234E-02	-3.28	3.087E-01	62.03
	179.99	-112.31	3.48	3.234E-02	-3.28	-2.60	-104.52
18	LOAD2						
	0.00	-64.18	-3.03	1.847E-02	-3.23	1.84	-64.03
	89.99	-64.18	2.249E-01	1.847E-02	-3.23	1.759E-01	62.02
	179.99	-64.18	3.48	1.847E-02	-3.23	-1.49	-104.51
19	LOAD1						
	0.00	-114.03	-3.29	-1.702E-02	-3.28	-2.60	-104.52
	90.00	-114.03	-3.862E-02	-1.702E-02	-3.28	-1.07	45.27
	180.00	-114.03	3.21	-1.702E-02	-3.28	4.618E-01	-97.57
19	LOAD2						
	0.00	-65.16	-3.29	-9.723E-03	-3.23	-1.49	-104.51
	90.00	-65.16	-3.858E-02	-9.723E-03	-3.23	-6.113E-01	45.27
	180.00	-65.16	3.21	-9.723E-03	-3.23	2.638E-01	-97.57
20	LOAD1						
	0.00	-114.28	-3.29	2.663E-03	-3.28	4.618E-01	-97.57
	90.00	-114.28	-3.979E-02	2.663E-03	-3.28	2.221E-01	52.32
	180.00	-114.28	3.21	2.663E-03	-3.28	-1.754E-02	-90.40
20	LOAD2						
	0.00	-65.30	-3.29	1.521E-03	-3.23	2.638E-01	-97.57
	90.00	-65.30	-3.979E-02	1.521E-03	-3.23	1.269E-01	52.32
	180.00	-65.30	3.21	1.521E-03	-3.23	-1.001E-02	-90.40
21	LOAD1						
	0.00	-114.30	-3.02	1.645E-03	-3.28	-1.754E-02	-90.40
	90.00	-114.30	2.349E-01	1.645E-03	-3.28	-1.656E-01	34.77
	180.00	-114.30	3.49	1.645E-03	-3.28	-3.136E-01	-132.68
21	LOAD2						
	0.00	-65.31	-3.02	9.399E-04	-3.23	-1.001E-02	-90.40
	90.00	-65.31	2.349E-01	9.399E-04	-3.23	-9.460E-02	34.77
	180.00	-65.31	3.49	9.399E-04	-3.23	-1.792E-01	-132.68
22	LOAD1						
	0.00	-114.19	-4.02	-6.976E-03	-3.28	-3.136E-01	-132.68
	117.72	-114.19	2.305E-01	-6.976E-03	-3.28	5.077E-01	90.49
	235.44	-114.19	4.48	-6.976E-03	-3.28	1.33	-186.94
22	LOAD2						
	0.00	-65.25	-4.02	-3.986E-03	-3.23	-1.792E-01	-132.68
	117.72	-65.25	2.305E-01	-3.986E-03	-3.23	2.901E-01	90.49
	235.44	-65.25	4.48	-3.986E-03	-3.23	7.594E-01	-186.95
23	LOAD1						
	0.00	-112.90	-4.57	1.130E-02	-3.28	1.33	-186.94

		117.72	-112.90	-3.179E-01	1.130E-02	-3.28	-1.819E-03	100.78
		235.44	-112.90	3.93	1.130E-02	-3.28	-1.33	-112.11
23	LOAD2							
		0.00	-64.51	-4.57	6.459E-03	-3.23	7.594E-01	-186.95
		117.72	-64.51	-3.181E-01	6.459E-03	-3.23	-1.027E-03	100.80
		235.44	-64.51	3.93	6.459E-03	-3.23	-7.614E-01	-112.06
24	LOAD1							
		0.00	-104.07	-2.55	1.50	-3.28	-1.33	-112.11
		36.01	-104.07	-1.25	1.50	-3.28	-55.49	-43.78
		72.01	-104.07	5.358E-02	1.50	-3.28	-109.64	-22.30
24	LOAD2							
		0.00	-59.47	-2.55	8.594E-01	-3.23	-7.614E-01	-112.06
		36.01	-59.47	-1.25	8.594E-01	-3.23	-31.71	-43.80
		72.01	-59.47	5.533E-02	8.594E-01	-3.23	-62.65	-22.38
25	LOAD1							
		0.00	-91.70	-1.16	1.81	-3.28	-109.64	-22.30
		36.00	-91.70	1.376E-01	1.81	-3.28	-174.70	-3.84
		72.00	-91.70	1.44	1.81	-3.28	-239.77	-32.21
25	LOAD2							
		0.00	-52.40	-1.14	1.03	-3.23	-62.65	-22.38
		36.00	-52.40	1.582E-01	1.03	-3.23	-99.83	-4.66
		72.00	-52.40	1.46	1.03	-3.23	-137.01	-33.77
26	LOAD1							
		0.00	-45.94	-2.02	-14.41	-3.28	-239.77	-32.21
		36.01	-45.94	-7.229E-01	-14.41	-3.28	279.10	17.24
		72.01	-45.94	5.778E-01	-14.41	-3.28	797.97	19.85
26	LOAD2							
		0.00	-26.25	-2.00	-8.23	-3.23	-137.01	-33.77
		36.01	-26.25	-7.010E-01	-8.23	-3.23	159.49	14.89
		72.01	-26.25	5.997E-01	-8.23	-3.23	455.98	16.71
27	LOAD1							
		0.00	-42.68	5.778E-01	22.30	11.72	797.97	16.36
		18.00	-42.68	1.23	22.30	11.72	396.62	1.049E-01
		36.00	-42.68	1.88	22.30	11.72	-4.73	-27.85
27	LOAD2							
		0.00	-24.39	5.997E-01	12.74	9.53	455.98	14.10
		18.00	-24.39	1.25	12.74	9.53	226.64	-2.55
		36.00	-24.39	1.90	12.74	9.53	-2.70	-30.90
28	LOAD1							
		0.00	-72.74	-6.847E-01	4.83	11.72	-4.73	-27.85
		18.00	-72.74	-3.448E-02	4.83	11.72	-91.71	-21.38
		36.00	-72.74	6.158E-01	4.83	11.72	-178.70	-26.61
28	LOAD2							
		0.00	-41.57	-7.246E-01	2.76	9.53	-2.70	-30.90
		18.00	-41.57	-7.431E-02	2.76	9.53	-52.41	-23.71
		36.00	-41.57	5.759E-01	2.76	9.53	-102.12	-28.23
29	LOAD1							
		0.00	-84.44	-5.622E-01	-1.318E-01	11.72	-178.70	-26.61
		18.00	-84.44	8.810E-02	-1.318E-01	11.72	-176.33	-22.34
		36.00	-84.44	7.383E-01	-1.318E-01	11.72	-173.95	-29.78
29	LOAD2							
		0.00	-48.25	-5.942E-01	-7.539E-02	9.53	-102.12	-28.23
		18.00	-48.25	5.608E-02	-7.539E-02	9.53	-100.76	-23.38
		36.00	-48.25	7.063E-01	-7.539E-02	9.53	-99.40	-30.25
30	LOAD1							
		0.00	-96.54	-2.11	-2.57	11.72	-173.95	-29.78
		58.26	-96.54	-1.906E-03	-2.57	11.72	-24.07	31.64
		116.52	-96.54	2.10	-2.57	11.72	125.81	-29.56
30	LOAD2							

	0.00	-55.17	-2.12	-1.47	9.53	-99.40	-30.25
	58.26	-55.17	-1.930E-02	-1.47	9.53	-13.73	32.19
	116.52	-55.17	2.09	-1.47	9.53	71.95	-28.00
31	LOAD1						
	0.00	-84.19	-9.622E-01	3.016E-01	11.72	125.81	-29.56
	18.00	-84.19	-3.119E-01	3.016E-01	11.72	120.38	-18.09
	36.00	-84.19	3.383E-01	3.016E-01	11.72	114.95	-18.33
31	LOAD2						
	0.00	-48.12	-9.317E-01	1.719E-01	9.53	71.95	-28.00
	18.00	-48.12	-2.815E-01	1.719E-01	9.53	68.85	-17.08
	36.00	-48.12	3.688E-01	1.719E-01	9.53	65.76	-17.86
32	LOAD1						
	0.00	-72.32	-1.08	4.30	11.72	114.95	-18.33
	18.00	-72.32	-4.330E-01	4.30	11.72	37.62	-4.69
	36.00	-72.32	2.173E-01	4.30	11.72	-39.71	-2.74
32	LOAD2						
	0.00	-41.34	-9.312E-01	2.46	9.53	65.76	-17.86
	18.00	-41.34	-2.810E-01	2.46	9.53	21.56	-6.95
	36.00	-41.34	3.693E-01	2.46	9.53	-22.65	-7.75
33	LOAD1						
	0.00	-41.88	-2.65	17.18	11.72	-39.71	-2.74
	18.00	-41.88	-2.00	17.18	11.72	-348.95	39.17
	36.00	-41.88	-1.35	17.18	11.72	-658.19	69.38
33	LOAD2						
	0.00	-23.95	-2.08	9.82	9.53	-22.65	-7.75
	18.00	-23.95	-1.43	9.82	9.53	-199.47	23.81
	36.00	-23.95	-7.781E-01	9.82	9.53	-376.29	43.67
34	LOAD1						
	0.00	-41.76	-1.35	-17.46	-40.77	-658.19	57.35
	18.00	-41.76	-7.030E-01	-17.46	-40.77	-343.82	75.86
	36.01	-41.76	-5.264E-02	-17.46	-40.77	-29.45	82.66
34	LOAD2						
	0.00	-23.88	-7.781E-01	-9.99	-24.14	-376.29	37.62
	18.00	-23.88	-1.278E-01	-9.99	-24.14	-196.49	45.78
	36.01	-23.88	5.226E-01	-9.99	-24.14	-16.70	42.22
35	LOAD1						
	0.00	-53.02	1.59	-4.34	-40.77	-29.45	82.66
	18.00	-53.02	2.24	-4.34	-40.77	48.61	48.26
	35.99	-53.02	2.89	-4.34	-40.77	126.68	2.16
35	LOAD2						
	0.00	-30.37	6.406E-01	-2.48	-24.14	-16.70	42.22
	18.00	-30.37	1.29	-2.48	-24.14	27.99	24.85
	35.99	-30.37	1.94	-2.48	-24.14	72.67	-4.23
36	LOAD1						
	0.00	-45.18	17.82	1.10	-40.77	126.68	2.16
	20.51	-45.18	18.56	1.10	-40.77	104.21	-370.95
	41.03	-45.18	19.30	1.10	-40.77	81.74	-759.26
36	LOAD2						
	0.00	-25.96	9.70	6.294E-01	-24.14	72.67	-4.23
	20.51	-25.96	10.44	6.294E-01	-24.14	59.76	-210.89
	41.03	-25.96	11.19	6.294E-01	-24.14	46.85	-432.75
37	LOAD1						
	0.00	-45.61	-18.27	1.10	28.90	86.65	-759.26
	17.99	-46.07	-17.81	1.10	28.90	66.94	-434.83
	35.97	-46.52	-17.35	1.10	28.90	47.24	-118.68
37	LOAD2						
	0.00	-26.27	-10.43	6.294E-01	16.02	50.21	-432.75
	17.99	-26.73	-9.97	6.294E-01	16.02	38.89	-249.28
	35.97	-27.19	-9.51	6.294E-01	16.02	27.56	-74.09

38	LOAD1						
	0.00	-48.40	-17.26	4.558E-01	28.82	47.36	-118.65
	28.66	-49.13	-16.53	4.558E-01	28.82	34.30	365.56
	57.31	-49.86	-15.80	4.558E-01	28.82	21.23	828.82
38	LOAD2						
	0.00	-26.81	-10.34	2.625E-01	15.97	27.64	-74.07
	28.66	-27.55	-9.61	2.625E-01	15.97	20.12	211.85
	57.31	-28.28	-8.88	2.625E-01	15.97	12.60	476.81
39	LOAD1						
	0.00	-46.40	24.15	3.586E-01	3.58	35.40	828.83
	18.00	-46.40	24.80	3.586E-01	3.58	28.95	388.27
	36.01	-46.40	25.45	3.586E-01	3.58	22.49	-64.00
39	LOAD2						
	0.00	-26.26	13.75	2.074E-01	1.36	20.20	476.82
	18.00	-26.26	14.40	2.074E-01	1.36	16.47	223.40
	36.01	-26.26	15.05	2.074E-01	1.36	12.73	-41.73
40	LOAD1						
	0.00	-76.19	1.97	3.655E-01	3.58	22.49	-64.00
	18.00	-76.19	2.62	3.655E-01	3.58	15.91	-105.27
	35.99	-76.19	3.27	3.655E-01	3.58	9.33	-158.23
40	LOAD2						
	0.00	-43.39	9.193E-01	2.080E-01	1.36	12.73	-41.73
	18.00	-43.39	1.57	2.080E-01	1.36	8.99	-64.12
	35.99	-43.39	2.22	2.080E-01	1.36	5.24	-98.22
41	LOAD1						
	0.00	-88.40	-1.80	2.403E-01	3.58	9.33	-158.23
	18.00	-88.40	-1.15	2.403E-01	3.58	5.01	-131.68
	36.01	-88.40	-4.993E-01	2.403E-01	3.58	6.806E-01	-116.84
41	LOAD2						
	0.00	-50.42	-1.12	1.361E-01	1.36	5.24	-98.22
	18.00	-50.42	-4.704E-01	1.361E-01	1.36	2.80	-83.89
	36.01	-50.42	1.799E-01	1.361E-01	1.36	3.451E-01	-81.28
42	LOAD1						
	0.00	-105.93	-2.91	-1.590E-01	3.58	6.806E-01	-116.84
	72.00	-105.93	-3.072E-01	-1.590E-01	3.58	12.13	-1.09
	144.00	-105.93	2.29	-1.590E-01	3.58	23.58	-72.60
42	LOAD2						
	0.00	-60.50	-2.62	-9.123E-02	1.36	3.451E-01	-81.28
	72.00	-60.50	-1.540E-02	-9.123E-02	1.36	6.91	13.46
	144.00	-60.50	2.59	-9.123E-02	1.36	13.48	-79.06
43	LOAD1						
	0.00	-107.15	-3.16	9.466E-01	3.58	23.58	-72.60
	85.56	-107.15	-7.035E-02	9.466E-01	3.58	-57.41	65.65
	171.12	-107.15	3.02	9.466E-01	3.58	-138.41	-60.56
43	LOAD2						
	0.00	-61.22	-3.21	5.410E-01	1.36	13.48	-79.06
	85.56	-61.22	-1.165E-01	5.410E-01	1.36	-32.80	63.14
	171.12	-61.22	2.97	5.410E-01	1.36	-79.09	-59.12
44	LOAD1						
	0.00	-88.27	-1.35	-3.759E-01	3.58	-138.41	-60.56
	18.00	-88.27	-7.045E-01	-3.759E-01	3.58	-131.64	-42.02
	36.01	-88.27	-5.417E-02	-3.759E-01	3.58	-124.87	-35.19
44	LOAD2						
	0.00	-50.44	-1.36	-2.148E-01	1.36	-79.09	-59.12
	18.00	-50.44	-7.067E-01	-2.148E-01	1.36	-75.22	-40.54
	36.01	-50.44	-5.638E-02	-2.148E-01	1.36	-71.36	-33.67
45	LOAD1						
	0.00	-76.49	-9.480E-01	-4.51	3.58	-124.87	-35.19

	18.00	-76.49	-2.979E-01	-4.51	3.58	-43.69	-23.98
	35.99	-76.49	3.522E-01	-4.51	3.58	37.49	-24.47
45 LOAD2							
	0.00	-43.71	-9.583E-01	-2.58	1.36	-71.36	-33.67
	18.00	-43.71	-3.082E-01	-2.58	1.36	-24.97	-22.27
	35.99	-43.71	3.419E-01	-2.58	1.36	21.42	-22.58
46 LOAD1							
	0.00	-47.15	-1.35	-20.04	3.93	37.49	-24.42
	18.03	-47.15	-6.992E-01	-20.04	3.93	398.82	-5.93
	36.07	-47.15	-4.773E-02	-20.04	3.93	760.15	7.997E-01
46 LOAD2							
	0.00	-26.94	-1.34	-11.45	1.68	21.42	-22.56
	18.03	-26.94	-6.864E-01	-11.45	1.68	227.89	-4.30
	36.07	-26.94	-3.495E-02	-11.45	1.68	434.37	2.20
47 LOAD1							
	0.00	-47.23	-4.773E-02	19.84	3.31	760.15	-2.26
	18.00	-47.23	6.025E-01	19.84	3.31	403.06	-7.25
	36.00	-47.23	1.25	19.84	3.31	45.97	-23.95
47 LOAD2							
	0.00	-26.99	-3.495E-02	11.34	2.75	434.37	3.315E-01
	18.00	-26.99	6.153E-01	11.34	2.75	230.32	-4.89
	36.00	-26.99	1.27	11.34	2.75	26.27	-21.82
48 LOAD1							
	0.00	-76.92	-5.355E-01	4.77	3.31	45.97	-23.95
	18.00	-76.92	1.148E-01	4.77	3.31	-39.87	-20.16
	36.00	-76.92	7.650E-01	4.77	3.31	-125.71	-28.08
48 LOAD2							
	0.00	-43.96	-5.024E-01	2.73	2.75	26.27	-21.82
	18.00	-43.96	1.478E-01	2.73	2.75	-22.78	-18.63
	36.00	-43.96	7.980E-01	2.73	2.75	-71.83	-27.14
49 LOAD1							
	0.00	-89.21	-2.295E-01	4.915E-01	3.31	-125.71	-28.08
	18.00	-89.21	4.208E-01	4.915E-01	3.31	-134.56	-29.80
	36.00	-89.21	1.07	4.915E-01	3.31	-143.40	-43.23
49 LOAD2							
	0.00	-50.98	-2.072E-01	2.809E-01	2.75	-71.83	-27.14
	18.00	-50.98	4.430E-01	2.809E-01	2.75	-76.89	-29.26
	36.00	-50.98	1.09	2.809E-01	2.75	-81.94	-43.09
50 LOAD1							
	0.00	-107.36	-2.61	-1.10	3.31	-143.40	-43.23
	72.00	-107.36	-4.898E-03	-1.10	3.31	-64.37	50.76
	144.00	-107.36	2.60	-1.10	3.31	14.66	-42.52
50 LOAD2							
	0.00	-61.35	-2.60	-6.272E-01	2.75	-81.94	-43.09
	72.00	-61.35	-3.585E-03	-6.272E-01	2.75	-36.78	50.81
	144.00	-61.35	2.60	-6.272E-01	2.75	8.38	-42.57
51 LOAD1							
	0.00	-111.53	-1.20	1.875E-02	3.31	14.66	-42.52
	18.00	-111.53	-5.468E-01	1.875E-02	3.31	14.33	-26.83
	36.00	-111.53	1.035E-01	1.875E-02	3.31	13.99	-22.84
51 LOAD2							
	0.00	-63.73	-1.20	1.072E-02	2.75	8.38	-42.57
	18.00	-63.73	-5.474E-01	1.072E-02	2.75	8.19	-26.87
	36.00	-63.73	1.028E-01	1.072E-02	2.75	7.99	-22.87
52 LOAD1							
	0.00	-112.64	-9.762E-01	1.408E-01	3.31	13.99	-22.84
	18.00	-112.64	-3.260E-01	1.408E-01	3.31	11.45	-11.12
	36.00	-112.64	3.243E-01	1.408E-01	3.31	8.92	-11.10
52 LOAD2							

	0.00	-64.37	-9.767E-01	8.045E-02	2.75	7.99	-22.87
	18.00	-64.37	-3.265E-01	8.045E-02	2.75	6.55	-11.14
	36.00	-64.37	3.238E-01	8.045E-02	2.75	5.10	-11.11
53	LOAD1						
	0.00	-113.80	-1.44	1.171E-01	3.31	8.92	-11.10
	18.00	-113.80	-7.914E-01	1.171E-01	3.31	6.81	8.99
	35.99	-113.80	-1.413E-01	1.171E-01	3.31	4.71	17.38
53	LOAD2						
	0.00	-65.03	-1.44	6.691E-02	2.75	5.10	-11.11
	18.00	-65.03	-7.915E-01	6.691E-02	2.75	3.89	8.98
	35.99	-65.03	-1.414E-01	6.691E-02	2.75	2.69	17.37
54	LOAD1						
	0.00	-113.80	-1.413E-01	1.171E-01	3.31	4.71	17.38
	31.63	-113.80	1.00	1.171E-01	3.31	1.00	3.78
	63.25	-113.80	2.14	1.171E-01	3.31	-2.70	-45.95
54	LOAD2						
	0.00	-65.03	-1.414E-01	6.691E-02	2.75	2.69	17.37
	31.63	-65.03	1.00	6.691E-02	2.75	5.732E-01	3.78
	63.25	-65.03	2.14	6.691E-02	2.75	-1.54	-45.94
55	LOAD1						
	0.00	-113.80	2.14	1.171E-01	3.31	-2.70	-45.95
	7.00	-113.80	2.21	1.171E-01	3.31	-3.52	-61.19
	14.00	-113.80	2.28	1.171E-01	3.31	-4.34	-76.92
55	LOAD2						
	0.00	-65.03	2.14	6.691E-02	2.75	-1.54	-45.94
	7.00	-65.03	2.21	6.691E-02	2.75	-2.01	-61.19
	14.00	-65.03	2.28	6.691E-02	2.75	-2.48	-76.92

TRAIN B - RETURN LINE
SEISMIC STRESS ANALYSIS
SAP2000 INPUT/OUTPUT

ATTACHMENT 10.5
(SEE SECTION 7.7.2)

S A P 2 0 0 0 (R)

Structural Analysis Programs

Nonlinear Version 7.40

Copyright (C) 1978-2000
COMPUTERS AND STRUCTURES, INC.
All rights reserved

This copy of SAP2000 is for the exclusive use of

THE LICENSEE

Unauthorized use is in violation of Federal copyright laws

It is the responsibility of the user to verify all
results produced by this program

21 Dec 2007 09:03:53

Program SAP2000 Nonlinear Version 7.40 File:Return - Seismic @ 2.0K.OUT
Page
1

D I S P L A C E M E N T D E G R E E S O F F R E E D O M

(A) = Active DOF, equilibrium equation
(-) = Restrained DOF, reaction computed
(+) = Constrained DOF
(>) = External substructure DOF
( ) = Null DOF

JOINTS			U1	U2	U3	R1	R2	R3
32	TO	41	A	A	A	A	A	A
32A	TO	41A	-	-	-	-	-	-
41W	TO	404106	A	A	A	A	A	A

A S S E M B L E D J O I N T M A S S E S

IN LOCAL COORDINATES

JOINT	U1	U2	U3	R1	R2	R3
32	0.002058	0.002058	0.002058	.000000	.000000	.000000
33	0.003374	0.003374	0.003374	.000000	.000000	.000000
34	0.003374	0.003374	0.003374	.000000	.000000	.000000
35	0.005387	0.005387	0.005387	.000000	.000000	.000000
36	0.005061	0.005061	0.005061	.000000	.000000	.000000
37	0.003374	0.003374	0.003374	.000000	.000000	.000000
38	0.003608	0.003608	0.003608	.000000	.000000	.000000
39	0.004373	0.004373	0.004373	.000000	.000000	.000000
40	0.003377	0.003377	0.003377	.000000	.000000	.000000
41	0.003143	0.003143	0.003143	.000000	.000000	.000000
32A	0.000371	0.000371	0.000371	.000000	.000000	.000000
41A	0.000179	0.000179	0.000179	.000000	.000000	.000000
41W	0.007462	0.007462	0.007462	.000000	.000000	.000000
323301	0.002765	0.002765	0.002765	.000000	.000000	.000000
323302	0.002766	0.002766	0.002766	.000000	.000000	.000000
323303	0.003376	0.003376	0.003376	.000000	.000000	.000000
323304	0.003374	0.003374	0.003374	.000000	.000000	.000000
333401	0.003456	0.003456	0.003456	.000000	.000000	.000000
333402	0.003456	0.003456	0.003456	.000000	.000000	.000000
343501	0.003374	0.003374	0.003374	.000000	.000000	.000000
343502	0.003374	0.003374	0.003374	.000000	.000000	.000000
343503	0.003374	0.003374	0.003374	.000000	.000000	.000000
343504	0.003700	0.003700	0.003700	.000000	.000000	.000000
353601	0.006747	0.006747	0.006747	.000000	.000000	.000000
353602	0.006748	0.006748	0.006748	.000000	.000000	.000000
353603	0.011808	0.011808	0.011808	.000000	.000000	.000000
353604	0.016868	0.016868	0.016868	.000000	.000000	.000000
353605	0.016869	0.016869	0.016869	.000000	.000000	.000000
353606	0.016869	0.016869	0.016869	.000000	.000000	.000000
353607	0.019466	0.019466	0.019466	.000000	.000000	.000000
353608	0.022064	0.022064	0.022064	.000000	.000000	.000000
353609	0.014406	0.014406	0.014406	.000000	.000000	.000000
353610	0.006748	0.006748	0.006748	.000000	.000000	.000000
353611	0.006748	0.006748	0.006748	.000000	.000000	.000000
363701	0.003374	0.003374	0.003374	.000000	.000000	.000000
363702	0.003374	0.003374	0.003374	.000000	.000000	.000000
363703	0.007147	0.007147	0.007147	.000000	.000000	.000000
363704	0.007147	0.007147	0.007147	.000000	.000000	.000000
363705	0.003374	0.003374	0.003374	.000000	.000000	.000000
363706	0.003374	0.003374	0.003374	.000000	.000000	.000000
373801	0.003374	0.003374	0.003374	.000000	.000000	.000000
373802	0.003609	0.003609	0.003609	.000000	.000000	.000000
383901	0.004371	0.004371	0.004371	.000000	.000000	.000000
394001	0.003374	0.003374	0.003374	.000000	.000000	.000000
394002	0.003374	0.003374	0.003374	.000000	.000000	.000000
394003	0.008434	0.008434	0.008434	.000000	.000000	.000000
394004	0.014765	0.014765	0.014765	.000000	.000000	.000000
394005	0.009705	0.009705	0.009705	.000000	.000000	.000000
394006	0.003374	0.003374	0.003374	.000000	.000000	.000000
394007	0.003376	0.003376	0.003376	.000000	.000000	.000000
404101	0.003374	0.003374	0.003374	.000000	.000000	.000000
404102	0.003374	0.003374	0.003374	.000000	.000000	.000000
404103	0.005623	0.005623	0.005623	.000000	.000000	.000000
404104	0.005623	0.005623	0.005623	.000000	.000000	.000000
404105	0.003374	0.003374	0.003374	.000000	.000000	.000000
404106	0.006185	0.006185	0.006185	.000000	.000000	.000000

T O T A L A S S E M B L E D J O I N T M A S S E S

IN GLOBAL COORDINATES

	UX	UY	UZ	RX	RY	RZ
TOTAL	0.336590	0.336590	0.336590	.000000	.000000	.000000

T O T A L A C C E L E R A T E D M A S S A N D L O C A T I O N

TOTAL MASS ACTIVATED BY ACCELERATION LOADS, IN GLOBAL COORDINATES

	UX	UY	UZ
MASS	0.336040	0.336040	0.336040
X-LOC	-656.299617	-656.299617	-656.299617
Y-LOC	1259.106	1259.106	1259.106
Z-LOC	-99.814835	-99.814835	-99.814835

Program SAP2000 Nonlinear Version 7.40 File:Return - Seismic @ 2.0K.OUT
Page 3

G L O B A L F O R C E B A L A N C E

TOTAL FORCE AND MOMENT AT THE ORIGIN, IN GLOBAL COORDINATES

LOAD LOAD1 ----------

	FX	FY	FZ	MX	MY	MZ
APPLIED	-3.55E-15	-1.78E-15	-129.748593	-163286.913	-85115.006	8.08E-12
SPRINGS	-66.564296	-10.741887	122.964425	152694.280	83028.930	11801.472
REACTNS	66.564296	10.741887	6.784169	10592.634	2086.076	-11801.472
TOTAL	-3.84E-13	1.23E-12	-4.53E-14	8.37E-11	-1.55E-11	-1.57E-09

SAP2000 v7.40 File: RETURN - SEISMIC @ 2.0K Kip-in Units PAGE 1
12/21/07 8:53:52

Sargent & Lundy LLC

S T A T I C L O A D C A S E S

STATIC CASE	CASE TYPE	SELF WT FACTOR
LOAD1	DEAD	1.0000

SAP2000 v7.40 File: RETURN - SEISMIC @ 2.0K Kip-in Units PAGE 2
12/21/07 8:53:52

Sargent & Lundy LLC

J O I N T D A T A

JOINT	GLOBAL-X	GLOBAL-Y	GLOBAL-Z	RESTRAINTS	ANGLE-A	ANGLE-B	ANGLE-C
32	29.00000	0.00000	-42.00000	0 0 0 0 0 0	0.000	0.000	0.000
33	196.04000	0.00000	-42.00000	0 0 0 0 0 0	0.000	0.000	0.000
34	196.04000	101.40000	-84.00000	0 0 0 0 0 0	0.000	0.000	0.000
35	196.04000	288.36000	-84.00000	0 0 0 0 0 0	0.000	0.000	0.000
36	-951.52000	1435.92000	-84.00000	0 0 0 0 0 0	0.000	0.000	0.000
37	-951.52000	1768.44000	-84.00000	0 0 0 0 0 0	0.000	0.000	0.000
38	-1031.44000	1848.36000	-84.00000	0 0 0 0 0 0	0.000	0.000	0.000
39	-1078.00000	1895.04000	-150.00000	0 0 0 0 0 0	0.000	0.000	0.000
40	-1453.96000	2270.28000	-150.00000	0 0 0 0 0 0	0.000	0.000	0.000
41	-1453.96000	2693.52000	-150.00000	0 0 0 0 0 0	0.000	0.000	0.000
32A	0.00000	0.00000	-42.00000	1 1 1 1 1 1	0.000	0.000	0.000
41A	-1453.96000	2707.52000	-150.00000	1 1 1 1 1 1	0.000	0.000	0.000
41W	-1453.96000	2630.27000	-150.00000	0 0 0 0 0 0	0.000	0.000	0.000
323301	65.00000	0.00000	-42.00000	0 0 0 0 0 0	0.000	0.000	0.000
323302	88.00000	0.00000	-42.00000	0 0 0 0 0 0	0.000	0.000	0.000
323303	124.04000	0.00000	-42.00000	0 0 0 0 0 0	0.000	0.000	0.000
323304	160.04000	0.00000	-42.00000	0 0 0 0 0 0	0.000	0.000	0.000
333401	196.04000	33.26000	-55.78000	0 0 0 0 0 0	90.000	22.500	0.000
333402	196.04000	68.14000	-70.22000	0 0 0 0 0 0	90.000	22.500	0.000
343501	196.04000	137.40000	-84.00000	0 0 0 0 0 0	90.000	0.000	0.000
343502	196.04000	173.40000	-84.00000	0 0 0 0 0 0	90.000	0.000	0.000
343503	196.04000	209.40000	-84.00000	0 0 0 0 0 0	90.000	0.000	0.000
343504	196.04000	245.40000	-84.00000	0 0 0 0 0 0	90.000	0.000	0.000
353601	145.13000	339.27000	-84.00000	0 0 0 0 0 0	135.000	0.000	0.000
353602	94.22000	390.18000	-84.00000	0 0 0 0 0 0	135.000	0.000	0.000

353603	43.30000	441.10000	-84.00000	0	0	0	0	0	0	135.000	0.000	0.000
353604	-83.97000	568.37000	-84.00000	0	0	0	0	0	0	135.000	0.000	0.000
353605	-211.25000	695.65000	-84.00000	0	0	0	0	0	0	135.000	0.000	0.000
353606	-338.53000	822.93000	-84.00000	0	0	0	0	0	0	135.000	0.000	0.000
353607	-465.81000	950.21000	-84.00000	0	0	0	0	0	0	135.000	0.000	0.000
353608	-632.29000	1116.69000	-84.00000	0	0	0	0	0	0	135.000	0.000	0.000
353609	-798.77000	1283.17000	-84.00000	0	0	0	0	0	0	135.000	0.000	0.000
353610	-849.69000	1334.09000	-84.00000	0	0	0	0	0	0	135.000	0.000	0.000
353611	-900.60000	1385.00000	-84.00000	0	0	0	0	0	0	135.000	0.000	0.000
363701	-951.52000	1471.92000	-84.00000	0	0	0	0	0	0	90.000	0.000	0.000
363702	-951.52000	1507.92000	-84.00000	0	0	0	0	0	0	90.000	0.000	0.000
363703	-951.52000	1543.92000	-84.00000	0	0	0	0	0	0	90.000	0.000	0.000
363704	-951.52000	1660.44000	-84.00000	0	0	0	0	0	0	90.000	0.000	0.000
363705	-951.52000	1696.44000	-84.00000	0	0	0	0	0	0	90.000	0.000	0.000
363706	-951.52000	1732.44000	-84.00000	0	0	0	0	0	0	90.000	0.000	0.000
373801	-976.98000	1793.90000	-84.00000	0	0	0	0	0	0	135.000	0.000	0.000
373802	-1002.43000	1819.35000	-84.00000	0	0	0	0	0	0	135.000	0.000	0.000
383901	-1049.44000	1866.36000	-109.42000	0	0	0	0	0	0	135.000	45.000	0.000
394001	-1103.46000	1920.50000	-150.00000	0	0	0	0	0	0	135.000	0.000	0.000
394002	-1128.91000	1945.95000	-150.00000	0	0	0	0	0	0	135.000	0.000	0.000
394003	-1154.37000	1971.41000	-150.00000	0	0	0	0	0	0	135.000	0.000	0.000
394004	-1256.19000	2073.23000	-150.00000	0	0	0	0	0	0	135.000	0.000	0.000
394005	-1377.19000	2194.23000	-150.00000	0	0	0	0	0	0	135.000	0.000	0.000
394006	-1402.65000	2219.69000	-150.00000	0	0	0	0	0	0	135.000	0.000	0.000
394007	-1428.10000	2245.14000	-150.00000	0	0	0	0	0	0	135.000	0.000	0.000
404101	-1453.96000	2306.28000	-150.00000	0	0	0	0	0	0	90.000	0.000	0.000
404102	-1453.96000	2342.28000	-150.00000	0	0	0	0	0	0	90.000	0.000	0.000
404103	-1453.96000	2378.28000	-150.00000	0	0	0	0	0	0	90.000	0.000	0.000
404104	-1453.96000	2462.28000	-150.00000	0	0	0	0	0	0	90.000	0.000	0.000
404105	-1453.96000	2498.28000	-150.00000	0	0	0	0	0	0	90.000	0.000	0.000
404106	-1453.96000	2534.28000	-150.00000	0	0	0	0	0	0	90.000	0.000	0.000

SAP2000 v7.40 File: RETURN - SEISMIC @ 2.0K Kip-in Units PAGE 3
12/21/07 8:53:52

Sargent & Lundy LLC

J O I N T S P R I N G D A T A

JOINT	K-U1	K-U2	K-U3	K-R1	K-R2	K-R3
323301	320.240	70.440	190.160	0.000	0.000	0.000
323302	198.960	43.760	118.120	0.000	0.000	0.000
323303	242.600	53.360	144.080	0.000	0.000	0.000
323304	363.920	80.040	216.080	0.000	0.000	0.000
333401	369.840	81.320	219.600	0.000	0.000	0.000
333402	369.840	81.320	219.600	0.000	0.000	0.000
343501	363.920	80.040	216.080	0.000	0.000	0.000
343502	242.600	53.360	144.080	0.000	0.000	0.000
343503	242.600	53.360	144.080	0.000	0.000	0.000
343504	410.840	90.360	243.960	0.000	0.000	0.000
353601	727.840	160.080	434.000	0.000	0.000	0.000
353602	485.240	106.720	288.120	0.000	0.000	0.000
353603	849.160	186.760	504.240	0.000	0.000	0.000
353604	1213.080	266.800	720.320	0.000	0.000	0.000
353605	1213.080	266.800	720.320	0.000	0.000	0.000
353606	1213.080	266.800	720.320	0.000	0.000	0.000
353607	1399.880	307.880	831.280	0.000	0.000	0.000
353608	1586.720	348.960	942.200	0.000	0.000	0.000
353609	1035.960	227.840	615.160	0.000	0.000	0.000
353610	485.240	106.720	288.120	0.000	0.000	0.000
353611	727.840	160.080	434.000	0.000	0.000	0.000
363701	363.920	80.040	216.080	0.000	0.000	0.000
363702	242.600	53.360	144.080	0.000	0.000	0.000
363703	513.960	113.040	305.200	0.000	0.000	0.000

363704	513.960	113.040	305.200	0.000	0.000	0.000
363705	242.600	53.360	144.080	0.000	0.000	0.000
363706	363.920	80.040	216.080	0.000	0.000	0.000
373801	363.920	80.040	216.080	0.000	0.000	0.000
373802	397.880	87.520	236.280	0.000	0.000	0.000
383901	629.120	123.600	393.000	0.000	0.000	0.000
394001	363.920	80.040	216.080	0.000	0.000	0.000
394002	242.600	53.360	144.080	0.000	0.000	0.000
394003	606.560	133.400	360.160	0.000	0.000	0.000
394004	1061.840	233.520	615.160	0.000	0.000	0.000
394005	697.920	153.480	414.440	0.000	0.000	0.000
394006	242.600	53.360	144.080	0.000	0.000	0.000
394007	363.920	80.040	216.080	0.000	0.000	0.000
404101	363.920	80.040	216.080	0.000	0.000	0.000
404102	242.600	53.360	144.080	0.000	0.000	0.000
404103	606.560	133.400	360.160	0.000	0.000	0.000
404104	606.560	133.400	360.160	0.000	0.000	0.000
404105	242.600	53.360	144.080	0.000	0.000	0.000
404106	363.920	80.040	216.080	0.000	0.000	0.000

SAP2000 v7.40 File: RETURN - SEISMIC @ 2.0K Kip-in Units PAGE 4
12/21/07 8:53:52

Sargent & Lundy LLC

F R A M E E L E M E N T D A T A

FRAME	JNT-1	JNT-2	SECTION	ANGLE	RELEASES	SEGMENTS	R1	R2	FACTOR	LENGTH
1	32A	32	SSPIPE	0.000	000000	2	0.000	0.000	0.000	29.000
2	32	323301	PIPEDR9	0.000	000000	2	0.000	0.000	0.000	36.000
3	323301	323302	PIPEDR9	0.000	000000	2	0.000	0.000	0.000	23.000
4	323302	323303	PIPEDR9	0.000	000000	2	0.000	0.000	0.000	36.040
5	323303	323304	PIPEDR9	0.000	000000	2	0.000	0.000	0.000	36.000
6	323304	33	PIPEDR9	0.000	000000	2	0.000	0.000	0.000	36.000
7	33	333401	PIPEDR9	0.000	000000	2	0.000	0.000	0.000	36.002
8	333401	333402	PIPEDR9	0.000	000000	2	0.000	0.000	0.000	37.751
9	333402	34	PIPEDR9	0.000	000000	2	0.000	0.000	0.000	36.002
10	34	343501	PIPEDR9	0.000	000000	2	0.000	0.000	0.000	36.000
11	343501	343502	PIPEDR9	0.000	000000	2	0.000	0.000	0.000	36.000
12	343502	343503	PIPEDR9	0.000	000000	2	0.000	0.000	0.000	36.000
13	343503	343504	PIPEDR9	0.000	000000	2	0.000	0.000	0.000	36.000
14	343504	35	PIPEDR9	0.000	000000	2	0.000	0.000	0.000	42.960
15	35	353601	PIPEDR9	0.000	000000	2	0.000	0.000	0.000	71.998
16	353601	353602	PIPEDR9	0.000	000000	2	0.000	0.000	0.000	71.998
17	353602	353603	PIPEDR9	0.000	000000	2	0.000	0.000	0.000	72.012

18	353603	353604	PIPEDR9	0.000	000000	2	0.000	0.000	0.000
179.987									
19	353604	353605	PIPEDR9	0.000	000000	2	0.000	0.000	0.000
180.001									
20	353605	353606	PIPEDR9	0.000	000000	2	0.000	0.000	0.000
180.001									
21	353606	353607	PIPEDR9	0.000	000000	2	0.000	0.000	0.000
180.001									
22	353607	353608	PIPEDR9	0.000	000000	2	0.000	0.000	0.000
235.438									
23	353608	353609	PIPEDR9	0.000	000000	2	0.000	0.000	0.000
235.438									
24	353609	353610	PIPEDR9	0.000	000000	2	0.000	0.000	0.000
72.012									
25	353610	353611	PIPEDR9	0.000	000000	2	0.000	0.000	0.000
71.998									
26	353611	36	PIPEDR9	0.000	000000	2	0.000	0.000	0.000
72.012									
27	36	363701	PIPEDR9	0.000	000000	2	0.000	0.000	0.000
36.000									
28	363701	363702	PIPEDR9	0.000	000000	2	0.000	0.000	0.000
36.000									
29	363702	363703	PIPEDR9	0.000	000000	2	0.000	0.000	0.000
36.000									
30	363703	363704	PIPEDR9	0.000	000000	2	0.000	0.000	0.000
116.520									
31	363704	363705	PIPEDR9	0.000	000000	2	0.000	0.000	0.000
36.000									
32	363705	363706	PIPEDR9	0.000	000000	2	0.000	0.000	0.000
36.000									
33	363706	37	PIPEDR9	0.000	000000	2	0.000	0.000	0.000
36.000									
34	37	373801	PIPEDR9	0.000	000000	2	0.000	0.000	0.000
36.006									
35	373801	373802	PIPEDR9	0.000	000000	2	0.000	0.000	0.000
35.992									
36	373802	38	PIPEDR9	0.000	000000	2	0.000	0.000	0.000
41.026									
37	38	383901	PIPEDR9	0.000	000000	2	0.000	0.000	0.000
35.975									
38	383901	39	PIPEDR9	0.000	000000	2	0.000	0.000	0.000
57.315									
39	39	394001	PIPEDR9	0.000	000000	2	0.000	0.000	0.000
36.006									
40	394001	394002	PIPEDR9	0.000	000000	2	0.000	0.000	0.000
35.992									
41	394002	394003	PIPEDR9	0.000	000000	2	0.000	0.000	0.000
36.006									
42	394003	394004	PIPEDR9	0.000	000000	2	0.000	0.000	0.000
143.995									
43	394004	394005	PIPEDR9	0.000	000000	2	0.000	0.000	0.000
171.120									
44	394005	394006	PIPEDR9	0.000	000000	2	0.000	0.000	0.000
36.006									
45	394006	394007	PIPEDR9	0.000	000000	2	0.000	0.000	0.000
35.992									
46	394007	40	PIPEDR9	0.000	000000	2	0.000	0.000	0.000
36.066									
47	40	404101	PIPEDR9	0.000	000000	2	0.000	0.000	0.000
36.000									
48	404101	404102	PIPEDR9	0.000	000000	2	0.000	0.000	0.000
36.000									
49	404102	404103	PIPEDR9	0.000	000000	2	0.000	0.000	0.000
36.000									
50	404103	404104	PIPEDR9	0.000	000000	2	0.000	0.000	0.000
84.000									

51	404104	404105	PIPEDR9	0.000	000000	2	0.000	0.000	0.000	36.000
52	404105	404106	PIPEDR9	0.000	000000	2	0.000	0.000	0.000	36.000
53	404106	41W	PIPEDR9	0.000	000000	2	0.000	0.000	0.000	95.990
54	41W	41	PIPEDR9	0.000	000000	2	0.000	0.000	0.000	63.250
55	41	41A	SSPIPE	0.000	000000	2	0.000	0.000	0.000	14.000

SAP2000 v7.40 File: RETURN - SEISMIC @ 2.0K Kip-in Units PAGE 5
12/21/07 8:53:52

Sargent & Lundy LLC

M A T E R I A L P R O P E R T Y D A T A

MAT LABEL	MODULUS OF ELASTICITY	POISSON'S RATIO	THERMAL COEFF	WEIGHT PER UNIT VOL	MASS PER UNIT VOL
PE	110.000	0.420	1.000E-04	9.290E-05	2.410E-07
SSTEEL	28300.000	0.300	6.500E-06	2.830E-04	7.324E-07
CONC	3600.000	0.200	5.500E-06	8.680E-05	2.246E-07
STEEL	29000.000	0.300	6.500E-06	2.830E-04	7.324E-07

SAP2000 v7.40 File: RETURN - SEISMIC @ 2.0K Kip-in Units PAGE 6
12/21/07 8:53:52

Sargent & Lundy LLC

M A T E R I A L D E S I G N D A T A

MAT LABEL	DESIGN CODE	STEEL FY	CONCRETE FC	REBAR FY	CONCRETE FCS	REBAR FYS
PE	N					
SSTEEL	S	36.000				
CONC	C		4.000	60.000	4.000	40.000
STEEL	S	36.000				

SAP2000 v7.40 File: RETURN - SEISMIC @ 2.0K Kip-in Units PAGE 7
12/21/07 8:53:52

Sargent & Lundy LLC

F R A M E S E C T I O N P R O P E R T Y D A T A

SECTION LABEL	MAT LABEL	SECTION TYPE	DEPTH	FLANGE WIDTH TOP	FLANGE THICK TOP	WEB THICK	FLANGE WIDTH BOTTOM	FLANGE THICK BOTTOM
PIPEDR9	PE		36.000	36.000	3.850	3.850	0.000	0.000
SSPIPE	SSTEEL		30.000	30.000	0.375	0.375	0.000	0.000

SAP2000 v7.40 File: RETURN - SEISMIC @ 2.0K Kip-in Units PAGE 8
12/21/07 8:53:52

Sargent & Lundy LLC

F R A M E S E C T I O N P R O P E R T Y D A T A

SECTION	AREA	TORSIONAL	MOMENTS OF INERTIA			SHEAR AREAS	

LABEL	INERTIA	I33	I22	A2	A3
PIPEDR9	388.858	101924.203	50962.090	50962.090	227.698	227.698
SSPIPE	34.901	7658.890	3829.445	3829.445	17.800	17.800

SAP2000 v7.40 File: RETURN - SEISMIC @ 2.0K Kip-in Units PAGE 9
12/21/07 8:53:52

Sargent & Lundy LLC

F R A M E S E C T I O N P R O P E R T Y D A T A

SECTION LABEL	SECTION MODULII S33	S22	PLASTIC MODULII Z33	Z22	RADII OF GYRATION R33	R22
PIPEDR9	2831.227	2831.227	3998.469	3998.469	11.448	11.448
SSPIPE	255.296	255.296	329.133	329.133	10.475	10.475

SAP2000 v7.40 File: RETURN - SEISMIC @ 2.0K Kip-in Units PAGE 10
12/21/07 8:53:52

Sargent & Lundy LLC

F R A M E S E C T I O N P R O P E R T Y D A T A

SECTION LABEL	TOTAL WEIGHT	TOTAL MASS
PIPEDR9	129.324	0.335
SSPIPE	0.425	1.099E-03

SAP2000 v7.40 File: RETURN - SEISMIC @ 2.0K Kip-in Units PAGE 11
12/21/07 8:53:52

Sargent & Lundy LLC

S H E L L S E C T I O N P R O P E R T Y D A T A

SECTION LABEL	MAT LABEL	SHELL TYPE	MEMBRANE THICK	BENDING THICK	MATERIAL ANGLE
SSEC1	SSTEEL	4	1.000	1.000	0.000

SAP2000 v7.40 File: RETURN - SEISMIC @ 2.0K Kip-in Units PAGE 12
12/21/07 8:53:52

Sargent & Lundy LLC

S H E L L S E C T I O N P R O P E R T Y D A T A

SECTION LABEL	TOTAL WEIGHT	TOTAL MASS
SSEC1	0.000	0.000

SAP2000 v7.40 File: RETURN - SEISMIC @ 2.0K Kip-in Units PAGE 13
12/21/07 8:53:52

Sargent & Lundy LLC

J O I N T D I S P L A C E M E N T L O A D S Load Case LOAD1

JOINT	GLOBAL-X	GLOBAL-Y	GLOBAL-Z	GLOBAL-XX	GLOBAL-YY	GLOBAL-ZZ
32A	0.08800	0.08900	0.02000	0.00000	0.00000	0.00000
41A	0.20300	0.18500	0.01300	0.00000	0.00000	0.00000

SAP2000 v7.40 File: RETURN - SEISMIC @ 2.0K Kip-in Units PAGE 14
12/21/07 8:53:53

Sargent & Lundy LLC

F R A M E T H E R M A L L O A D S Load Case LOAD1

FRAME	TYPE	VALUE	PATTERN	MULTIPLIER
1	TEMPERATURE	7.4300		
2	TEMPERATURE	7.4300		
3	TEMPERATURE	7.4300		
4	TEMPERATURE	7.4300		
5	TEMPERATURE	7.4300		
6	TEMPERATURE	7.4300		
7	TEMPERATURE	7.4300		
8	TEMPERATURE	7.4300		
9	TEMPERATURE	7.4300		
10	TEMPERATURE	7.4300		
11	TEMPERATURE	7.4300		
12	TEMPERATURE	7.4300		
13	TEMPERATURE	7.4300		
14	TEMPERATURE	7.4300		
15	TEMPERATURE	7.4300		
16	TEMPERATURE	7.4300		
17	TEMPERATURE	7.4300		
18	TEMPERATURE	7.4300		
19	TEMPERATURE	7.4300		
20	TEMPERATURE	7.4300		
21	TEMPERATURE	7.4300		
22	TEMPERATURE	7.4300		
23	TEMPERATURE	7.4300		
24	TEMPERATURE	7.4300		
25	TEMPERATURE	7.4300		
26	TEMPERATURE	7.4300		
27	TEMPERATURE	7.4300		
28	TEMPERATURE	7.4300		
29	TEMPERATURE	7.4300		
30	TEMPERATURE	7.4300		
31	TEMPERATURE	7.4300		
32	TEMPERATURE	7.4300		
33	TEMPERATURE	7.4300		
34	TEMPERATURE	7.4300		
35	TEMPERATURE	7.4300		
36	TEMPERATURE	7.4300		
37	TEMPERATURE	7.4300		
38	TEMPERATURE	7.4300		
39	TEMPERATURE	7.4300		
40	TEMPERATURE	7.4300		
41	TEMPERATURE	7.4300		
42	TEMPERATURE	7.4300		
43	TEMPERATURE	7.4300		
44	TEMPERATURE	7.4300		
45	TEMPERATURE	7.4300		
46	TEMPERATURE	7.4300		
47	TEMPERATURE	7.4300		
48	TEMPERATURE	7.4300		
49	TEMPERATURE	7.4300		
50	TEMPERATURE	7.4300		

51	TEMPERATURE	7.4300
52	TEMPERATURE	7.4300
53	TEMPERATURE	7.4300
54	TEMPERATURE	7.4300
55	TEMPERATURE	7.4300

SAP2000 v7.40 File: RETURN - SEISMIC @ 2.0K Kip-in Units PAGE 1
12/21/07 8:54:29

Sargent & Lundy LLC

J O I N T D I S P L A C E M E N T S

JOINT	LOAD	U1	U2	U3	R1	R2	R3
32	LOAD1	0.0875	0.0871	0.0190	0.0000	3.177E-05	-7.225E-05
33	LOAD1	0.0776	-0.0543	-1.518E-03	7.997E-05	3.205E-04	2.436E-05
34	LOAD1	-5.158E-03	-0.0192	-0.0487	-1.782E-05	7.851E-04	9.999E-05
35	LOAD1	0.1123	0.0398	-0.0369	-4.423E-04	8.521E-04	-1.706E-04
36	LOAD1	-0.1099	-0.0399	-0.0270	2.598E-04	-3.995E-04	-1.807E-04
37	LOAD1	0.0768	0.0403	-0.0156	1.912E-05	2.682E-04	6.872E-05
38	LOAD1	-0.0171	0.0160	0.0409	-1.166E-04	-3.895E-04	3.780E-04
39	LOAD1	0.0296	-0.0265	-0.0799	1.045E-04	-2.398E-04	9.804E-05
40	LOAD1	-0.0898	-0.0360	-0.0159	1.250E-04	-3.057E-04	6.804E-06
41	LOAD1	0.2028	0.1842	0.0126	1.761E-05	0.0000	-1.922E-05
32A	LOAD1	0.0880	0.0890	0.0200	0.0000	0.0000	0.0000
41A	LOAD1	0.2030	0.1850	0.0130	0.0000	0.0000	0.0000
41W	LOAD1	0.1524	0.1285	-0.0234	3.281E-04	-4.609E-05	-1.099E-03
323301	LOAD1	0.0594	0.0484	3.535E-03	1.775E-05	2.246E-04	-7.952E-04
323302	LOAD1	0.0516	0.0257	-2.432E-03	2.867E-05	1.636E-04	-8.317E-04
323303	LOAD1	0.0482	-4.245E-03	-4.974E-03	4.578E-05	4.113E-05	-7.468E-04
323304	LOAD1	0.0545	-0.0304	-2.531E-03	6.287E-05	4.194E-05	-5.639E-04
333401	LOAD1	-0.0261	-0.0417	-0.0146	4.181E-04	6.085E-05	6.856E-04
333402	LOAD1	-0.0104	-0.0125	-0.0243	5.557E-04	3.343E-04	5.955E-04
343501	LOAD1	-8.158E-03	4.729E-03	-0.0230	7.980E-04	-3.499E-04	-1.165E-04
343502	LOAD1	3.599E-04	-2.359E-03	-0.0112	8.109E-04	-1.901E-04	-3.704E-04
343503	LOAD1	8.951E-03	-0.0204	-7.831E-03	8.238E-04	3.519E-05	-6.909E-04
343504	LOAD1	0.0194	-0.0538	-0.0126	8.367E-04	3.094E-04	-9.377E-04
353601	LOAD1	-0.0182	-0.0285	-8.510E-03	8.540E-04	-2.247E-04	8.256E-04
353602	LOAD1	-7.405E-03	1.036E-03	-5.628E-03	7.927E-04	3.984E-06	1.940E-04

353603	LOAD1	-2.671E-03	2.158E-03	-9.791E-03	7.314E-04	3.441E-04	-6.180E-06
353604	LOAD1	-3.837E-04	4.740E-05	-9.392E-03	5.782E-04	-8.111E-05	-7.593E-06
353605	LOAD1	-5.466E-05	-1.957E-05	-9.029E-03	4.250E-04	3.122E-05	1.484E-06
353606	LOAD1	-4.694E-06	1.106E-06	-8.646E-03	2.718E-04	-8.288E-05	0.0000
353607	LOAD1	2.131E-05	7.165E-06	-9.032E-03	1.185E-04	3.667E-04	0.0000
353608	LOAD1	2.195E-04	-1.261E-05	-9.609E-03	-8.190E-05	7.027E-05	-4.491E-06
353609	LOAD1	2.335E-03	-1.810E-03	-0.0105	-2.823E-04	-6.583E-04	-5.887E-06
353610	LOAD1	7.055E-03	-8.884E-04	-4.095E-03	-3.436E-04	4.075E-06	1.896E-04
353611	LOAD1	0.0175	0.0282	-7.972E-03	-4.049E-04	1.697E-04	8.128E-04
363701	LOAD1	-0.0231	0.0610	-0.0124	-3.272E-04	-2.200E-04	-8.854E-04
363702	LOAD1	-0.0135	0.0258	-8.061E-03	-2.549E-04	-4.562E-05	-7.183E-04
363703	LOAD1	-6.552E-03	5.872E-03	-9.246E-03	-1.826E-04	1.211E-04	-4.034E-04
363704	LOAD1	6.658E-03	-6.977E-03	-9.783E-03	5.135E-05	-1.311E-04	-2.670E-04
363705	LOAD1	0.0136	-0.0208	-8.433E-03	1.236E-04	-1.328E-05	-4.831E-04
363706	LOAD1	0.0234	-0.0452	-0.0100	1.959E-04	5.397E-05	-5.534E-04
373801	LOAD1	-8.925E-03	-0.0460	-4.328E-03	5.855E-05	-3.527E-04	6.818E-04
373802	LOAD1	5.264E-03	-0.0173	0.0122	-5.900E-05	-3.992E-04	5.917E-04
383901	LOAD1	3.059E-03	1.753E-03	-3.611E-03	-3.403E-04	1.150E-03	5.330E-06
394001	LOAD1	-0.0234	-4.503E-05	-0.0360	-2.478E-04	-5.978E-04	4.669E-05
394002	LOAD1	-0.0143	6.418E-04	-0.0149	-2.521E-04	-3.513E-04	1.832E-05
394003	LOAD1	-8.197E-03	8.205E-04	-8.468E-03	-2.564E-04	-1.049E-05	9.366E-06
394004	LOAD1	-3.338E-04	-1.262E-03	-9.790E-03	-2.736E-04	1.854E-04	-7.416E-05
394005	LOAD1	7.593E-03	2.225E-03	-0.0103	-2.941E-04	-3.385E-04	3.916E-04
394006	LOAD1	0.0137	0.0208	-6.313E-03	-2.984E-04	-6.678E-05	6.178E-04
394007	LOAD1	0.0226	0.0502	-8.166E-03	-3.027E-04	9.144E-05	6.949E-04
404101	LOAD1	-0.0200	0.0517	-9.144E-03	-2.797E-04	-1.063E-04	-6.749E-04
404102	LOAD1	-0.0102	0.0229	-7.141E-03	-2.537E-04	-4.000E-05	-5.739E-04
404103	LOAD1	-2.438E-03	6.588E-03	-6.244E-03	-2.278E-04	2.718E-05	-3.104E-04
404104	LOAD1	0.0127	1.011E-03	-6.254E-03	-1.672E-04	-1.403E-06	-1.661E-04
404105	LOAD1	0.0257	-5.195E-03	-8.342E-03	-1.413E-04	1.104E-04	-4.233E-04
404106	LOAD1	0.0440	-0.0252	-0.0141	-1.153E-04	2.275E-04	-8.616E-04

Sargent & Lundy LLC

F R A M E E L E M E N T F O R C E S

FRAME	LOAD	LOC	P	V2	V3	T	M2	M3
1	LOAD1							
		0.00	-65.19	-3.21	4.84	1.87	340.21	-163.95
		14.50	-65.19	-3.07	4.84	1.87	269.98	-118.39
		29.00	-65.19	-2.93	4.84	1.87	199.75	-74.91
2	LOAD1							
		0.00	-65.19	-2.93	4.84	1.87	199.75	-74.91
		18.00	-65.19	-2.28	4.84	1.87	112.57	-28.07
		36.00	-65.19	-1.63	4.84	1.87	25.39	7.06
3	LOAD1							
		0.00	-46.18	-9.545E-01	1.43	1.87	25.39	7.06
		11.50	-46.18	-5.391E-01	1.43	1.87	8.89	15.65
		23.00	-46.18	-1.237E-01	1.43	1.87	-7.60	19.46
4	LOAD1							
		0.00	-35.90	-4.110E-01	3.107E-01	1.87	-7.60	19.46
		18.02	-35.90	2.400E-01	3.107E-01	1.87	-13.20	21.00
		36.04	-35.90	8.910E-01	3.107E-01	1.87	-18.80	10.81
5	LOAD1							
		0.00	-24.22	1.744E-01	5.372E-01	1.87	-18.80	10.81
		18.00	-24.22	8.246E-01	5.372E-01	1.87	-28.47	1.82
		36.00	-24.22	1.47	5.372E-01	1.87	-38.14	-18.87
6	LOAD1							
		0.00	-4.38	9.280E-01	2.97	1.87	-38.14	-18.87
		18.00	-4.38	1.58	2.97	1.87	-91.61	-41.43
		36.00	-4.38	2.23	2.97	1.87	-145.08	-75.69
7	LOAD1							
		0.00	-3.60	9.217E-01	-4.38	14.39	-163.00	1.87
		18.00	-3.85	1.52	-4.38	14.39	-84.15	-20.12
		36.00	-4.10	2.12	-4.38	14.39	-5.29	-52.94
8	LOAD1							
		0.00	-13.74	-1.07	-9.892E-01	14.39	-5.29	-52.94
		18.88	-14.00	-4.434E-01	-9.892E-01	14.39	13.38	-38.62
		37.75	-14.26	1.867E-01	-9.892E-01	14.39	32.05	-36.20
9	LOAD1							
		0.00	-18.10	-5.15	2.750E-02	14.40	32.05	-36.20
		18.00	-18.35	-4.55	2.750E-02	14.40	31.56	51.08
		36.00	-18.60	-3.95	2.750E-02	14.40	31.06	127.54
10	LOAD1							
		0.00	-18.69	3.47	2.750E-02	1.42	34.21	127.54
		18.00	-18.69	4.12	2.750E-02	1.42	33.71	59.21
		36.00	-18.69	4.77	2.750E-02	1.42	33.22	-20.83
11	LOAD1							
		0.00	-21.66	-2.086E-01	-3.510E-01	1.42	33.22	-20.83
		18.00	-21.66	4.416E-01	-3.510E-01	1.42	39.54	-22.93
		36.00	-21.66	1.09	-3.510E-01	1.42	45.85	-36.73
12	LOAD1							
		0.00	-21.57	-5.247E-01	-2.251E-01	1.42	45.85	-36.73
		18.00	-21.57	1.256E-01	-2.251E-01	1.42	49.91	-33.14

	36.00	-21.57	7.758E-01	-2.251E-01	1.42	53.96	-41.25
13 LOAD1							
	0.00	-19.40	-3.526E-01	8.628E-01	1.42	53.96	-41.25
	18.00	-19.40	2.977E-01	8.628E-01	1.42	38.43	-40.75
	36.00	-19.40	9.479E-01	8.628E-01	1.42	22.90	-51.96
14 LOAD1							
	0.00	-11.44	-2.13	5.73	1.42	22.90	-51.96
	21.48	-11.44	-1.35	5.73	1.42	-100.10	-14.56
	42.96	-11.44	-5.772E-01	5.73	1.42	-223.10	6.17
15 LOAD1							
	0.00	-12.14	-5.772E-01	-4.04	-3.36	-223.10	5.36
	36.00	-12.14	7.232E-01	-4.04	-3.36	-77.57	2.74
	72.00	-12.14	2.02	-4.04	-3.36	67.96	-46.71
16 LOAD1							
	0.00	-25.38	-1.67	5.219E-01	-3.36	67.96	-46.71
	36.00	-25.38	-3.693E-01	5.219E-01	-3.36	49.18	-10.00
	72.00	-25.38	9.311E-01	5.219E-01	-3.36	30.39	-20.12
17 LOAD1							
	0.00	-28.97	-6.905E-01	4.113E-01	-3.36	30.39	-20.12
	36.01	-28.97	6.102E-01	4.113E-01	-3.36	15.58	-18.67
	72.01	-28.97	1.91	4.113E-01	-3.36	7.765E-01	-64.06
18 LOAD1							
	0.00	-31.24	-3.03	8.139E-03	-3.36	7.765E-01	-64.06
	89.99	-31.24	2.247E-01	8.139E-03	-3.36	4.403E-02	62.00
	179.99	-31.24	3.48	8.139E-03	-3.36	-6.884E-01	-104.50
19 LOAD1							
	0.00	-31.70	-3.29	-4.508E-03	-3.36	-6.884E-01	-104.50
	90.00	-31.70	-3.853E-02	-4.508E-03	-3.36	-2.827E-01	45.27
	180.00	-31.70	3.21	-4.508E-03	-3.36	1.230E-01	-97.57
20 LOAD1							
	0.00	-31.77	-3.29	7.128E-04	-3.36	1.230E-01	-97.57
	90.00	-31.77	-3.983E-02	7.128E-04	-3.36	5.887E-02	52.32
	180.00	-31.77	3.21	7.128E-04	-3.36	-5.284E-03	-90.40
21 LOAD1							
	0.00	-31.78	-3.02	4.177E-04	-3.36	-5.284E-03	-90.40
	90.00	-31.78	2.349E-01	4.177E-04	-3.36	-4.288E-02	34.77
	180.00	-31.78	3.49	4.177E-04	-3.36	-8.047E-02	-132.68
22 LOAD1							
	0.00	-31.75	-4.02	-1.788E-03	-3.36	-8.047E-02	-132.68
	117.72	-31.75	2.305E-01	-1.788E-03	-3.36	1.300E-01	90.49
	235.44	-31.75	4.48	-1.788E-03	-3.36	3.406E-01	-186.94
23 LOAD1							
	0.00	-31.40	-4.57	2.611E-03	-3.36	3.406E-01	-186.94
	117.72	-31.40	-3.179E-01	2.611E-03	-3.36	3.323E-02	100.78
	235.44	-31.40	3.93	2.611E-03	-3.36	-2.741E-01	-112.10
24 LOAD1							
	0.00	-28.98	-2.55	4.151E-01	-3.36	-2.741E-01	-112.10
	36.01	-28.98	-1.25	4.151E-01	-3.36	-15.22	-43.76
	72.01	-28.98	5.303E-02	4.151E-01	-3.36	-30.17	-22.25
25 LOAD1							
	0.00	-25.55	-1.13	5.099E-01	-3.36	-30.17	-22.25
	36.00	-25.55	1.736E-01	5.099E-01	-3.36	-48.52	-5.09
	72.00	-25.55	1.47	5.099E-01	-3.36	-66.88	-34.75

26	LOAD1						
	0.00	-12.79	-1.99	-4.01	-3.36	-66.88	-34.75
	36.01	-12.79	-6.849E-01	-4.01	-3.36	77.34	13.33
	72.01	-12.79	6.158E-01	-4.01	-3.36	221.57	14.57
27	LOAD1						
	0.00	-11.88	6.158E-01	6.21	7.93	221.57	12.68
	18.00	-11.88	1.27	6.21	7.93	109.73	-4.26
	36.00	-11.88	1.92	6.21	7.93	-2.11	-32.90
28	LOAD1						
	0.00	-20.30	-7.528E-01	1.33	7.93	-2.11	-32.90
	18.00	-20.30	-1.025E-01	1.33	7.93	-26.02	-25.20
	36.00	-20.30	5.477E-01	1.33	7.93	-49.93	-29.20
29	LOAD1						
	0.00	-23.56	-6.138E-01	-4.979E-02	7.93	-49.93	-29.20
	18.00	-23.56	3.645E-02	-4.979E-02	7.93	-49.03	-24.01
	36.00	-23.56	6.867E-01	-4.979E-02	7.93	-48.13	-30.52
30	LOAD1						
	0.00	-26.93	-2.14	-7.136E-01	7.93	-48.13	-30.52
	58.26	-26.93	-3.054E-02	-7.136E-01	7.93	-6.56	32.57
	116.52	-26.93	2.07	-7.136E-01	7.93	35.01	-26.96
31	LOAD1						
	0.00	-23.51	-9.118E-01	7.516E-02	7.93	35.01	-26.96
	18.00	-23.51	-2.616E-01	7.516E-02	7.93	33.66	-16.40
	36.00	-23.51	3.887E-01	7.516E-02	7.93	32.30	-17.54
32	LOAD1						
	0.00	-20.21	-8.264E-01	1.19	7.93	32.30	-17.54
	18.00	-20.21	-1.761E-01	1.19	7.93	10.94	-8.52
	36.00	-20.21	4.741E-01	1.19	7.93	-10.43	-11.20
33	LOAD1						
	0.00	-11.70	-1.69	4.80	7.93	-10.43	-11.20
	18.00	-11.70	-1.04	4.80	7.93	-96.87	13.33
	36.00	-11.70	-3.876E-01	4.80	7.93	-183.31	26.16
34	LOAD1						
	0.00	-11.67	-3.876E-01	-4.88	-12.89	-183.31	24.11
	18.00	-11.67	2.627E-01	-4.88	-12.89	-95.45	25.23
	36.01	-11.67	9.131E-01	-4.88	-12.89	-7.59	14.65
35	LOAD1						
	0.00	-14.92	-2.211E-02	-1.20	-12.89	-7.59	14.65
	18.00	-14.92	6.280E-01	-1.20	-12.89	14.03	9.19
	35.99	-14.92	1.28	-1.20	-12.89	35.65	-7.96
36	LOAD1						
	0.00	-12.83	4.16	3.142E-01	-12.89	35.65	-7.96
	20.51	-12.83	4.90	3.142E-01	-12.89	29.20	-100.91
	41.03	-12.83	5.64	3.142E-01	-12.89	22.76	-209.07
37	LOAD1						
	0.00	-13.06	-5.07	3.142E-01	6.96	25.21	-209.07
	17.99	-13.52	-4.61	3.142E-01	6.96	19.56	-122.03
	35.97	-13.98	-4.15	3.142E-01	6.96	13.91	-43.25
38	LOAD1						
	0.00	-12.05	-5.59	1.237E-01	6.92	13.96	-43.24
	28.66	-12.78	-4.86	1.237E-01	6.92	10.42	106.60
	57.31	-13.51	-4.13	1.237E-01	6.92	6.87	235.48

39	LOAD1						
	0.00	-12.47	6.65	9.756E-02	-4.719E-01	9.75	235.48
	18.00	-12.47	7.30	9.756E-02	-4.719E-01	8.00	109.93
	36.01	-12.47	7.95	9.756E-02	-4.719E-01	6.24	-27.34
40	LOAD1						
	0.00	-20.99	1.810E-01	1.012E-01	-4.719E-01	6.24	-27.34
	18.00	-20.99	8.311E-01	1.012E-01	-4.719E-01	4.42	-36.45
	35.99	-20.99	1.48	1.012E-01	-4.719E-01	2.60	-57.25
41	LOAD1						
	0.00	-24.47	-6.663E-01	6.692E-02	-4.719E-01	2.60	-57.25
	18.00	-24.47	-1.593E-02	6.692E-02	-4.719E-01	1.39	-51.11
	36.01	-24.47	6.344E-01	6.692E-02	-4.719E-01	1.889E-01	-56.68
42	LOAD1						
	0.00	-29.45	-2.42	-4.254E-02	-4.719E-01	1.889E-01	-56.68
	72.00	-29.45	1.857E-01	-4.254E-02	-4.719E-01	3.25	23.58
	144.00	-29.45	2.79	-4.254E-02	-4.719E-01	6.31	-83.42
43	LOAD1						
	0.00	-29.80	-3.24	2.521E-01	-4.719E-01	6.31	-83.42
	85.56	-29.80	-1.453E-01	2.521E-01	-4.719E-01	-15.26	61.24
	171.12	-29.80	2.95	2.521E-01	-4.719E-01	-36.83	-58.56
44	LOAD1						
	0.00	-24.50	-1.34	-8.936E-02	-4.719E-01	-36.83	-58.56
	18.00	-24.50	-6.861E-01	-8.936E-02	-4.719E-01	-35.22	-40.35
	36.01	-24.50	-3.573E-02	-8.936E-02	-4.719E-01	-33.61	-33.86
45	LOAD1						
	0.00	-21.17	-9.453E-01	-1.20	-4.719E-01	-33.61	-33.86
	18.00	-21.17	-2.952E-01	-1.20	-4.719E-01	-12.01	-22.69
	35.99	-21.17	3.549E-01	-1.20	-4.719E-01	9.60	-23.23
46	LOAD1						
	0.00	-12.86	-1.41	-5.40	-1.439E-01	9.60	-23.24
	18.03	-12.86	-7.582E-01	-5.40	-1.439E-01	106.96	-3.69
	36.07	-12.86	-1.068E-01	-5.40	-1.439E-01	204.32	4.11
47	LOAD1						
	0.00	-12.83	-1.068E-01	5.45	2.85	204.32	2.97
	18.00	-12.83	5.435E-01	5.45	2.85	106.15	-9.624E-01
	36.00	-12.83	1.19	5.45	2.85	7.97	-16.60
48	LOAD1						
	0.00	-20.11	-7.822E-01	1.32	2.85	7.97	-16.60
	18.00	-20.11	-1.319E-01	1.32	2.85	-15.71	-8.37
	36.00	-20.11	5.183E-01	1.32	2.85	-39.40	-11.85
49	LOAD1						
	0.00	-22.58	-5.106E-01	9.154E-02	2.85	-39.40	-11.85
	18.00	-22.58	1.397E-01	9.154E-02	2.85	-41.04	-8.51
	36.00	-22.58	7.899E-01	9.154E-02	2.85	-42.69	-16.88
50	LOAD1						
	0.00	-24.06	-1.46	-7.873E-01	2.85	-42.69	-16.88
	42.00	-24.06	5.849E-02	-7.873E-01	2.85	-9.63	12.53
	84.00	-24.06	1.58	-7.873E-01	2.85	23.44	-21.79
51	LOAD1						
	0.00	-16.34	-6.766E-01	-9.221E-01	2.85	23.44	-21.79
	18.00	-16.34	-2.639E-02	-9.221E-01	2.85	40.04	-15.46
	36.00	-16.34	6.239E-01	-9.221E-01	2.85	56.64	-20.84
52	LOAD1						

	0.00	-10.10	-5.781E-01	-6.449E-01	2.85	56.64	-20.84
	18.00	-10.10	7.215E-02	-6.449E-01	2.85	68.25	-16.29
	36.00	-10.10	7.224E-01	-6.449E-01	2.85	79.86	-23.44
53	LOAD1						
	0.00	5.90	-2.32	1.38	2.85	79.86	-23.44
	48.00	5.90	-5.865E-01	1.38	2.85	13.84	46.32
	95.99	5.90	1.15	1.38	2.85	-52.17	32.86
54	LOAD1						
	0.00	5.90	1.15	1.38	2.85	-52.17	32.86
	31.63	5.90	2.29	1.38	2.85	-95.67	-21.49
	63.25	5.90	3.43	1.38	2.85	-139.16	-111.97
55	LOAD1						
	0.00	5.90	3.43	1.38	2.85	-139.16	-111.97
	7.00	5.90	3.50	1.38	2.85	-148.79	-136.24
	14.00	5.90	3.57	1.38	2.85	-158.42	-160.99

TRAIN B - BACKWASH LINE THERMAL STRESS ANALYSIS SAP2000 INPUT/OUTPUT

ATTACHMENT 10.6 (SEE SECTION 7.8.2)

S A P 2 0 0 0 (R)

Structural Analysis Programs

Nonlinear Version 7.40

Copyright (C) 1978-2000
COMPUTERS AND STRUCTURES, INC.
All rights reserved

This copy of SAP2000 is for the exclusive use of

THE LICENSEE

Unauthorized use is in violation of Federal copyright laws

It is the responsibility of the user to verify all
results produced by this program

21 Dec 2007 09:12:46

Program SAP2000 Nonlinear Version 7.40 File:W Thermal @ 25 & 20 degF & 0.5K.OUT
Page
1

D I S P L A C E M E N T D E G R E E S O F F R E E D O M

(A) = Active DOF, equilibrium equation
(-) = Restrained DOF, reaction computed
(+) = Constrained DOF
(>) = External substructure DOF
( ) = Null DOF

JOINTS			U1	U2	U3	R1	R2	R3
54	TO	61	A	A	A	A	A	A
54A	TO	61A	-	-	-	-	-	-
545501	TO	606109	A	A	A	A	A	A

A S S E M B L E D J O I N T M A S S E S

IN LOCAL COORDINATES

JOINT	U1	U2	U3	R1	R2	R3
54	3.46E-05	3.46E-05	3.46E-05	.000000	.000000	.000000
55	1.32E-05	1.32E-05	1.32E-05	.000000	.000000	.000000
56	1.32E-05	1.32E-05	1.32E-05	.000000	.000000	.000000
57	1.32E-05	1.32E-05	1.32E-05	.000000	.000000	.000000
58	8.57E-06	8.57E-06	8.57E-06	.000000	.000000	.000000
59	1.32E-05	1.32E-05	1.32E-05	.000000	.000000	.000000
60	1.32E-05	1.32E-05	1.32E-05	.000000	.000000	.000000
61	2.84E-05	2.84E-05	2.84E-05	.000000	.000000	.000000
54A	9.79E-06	9.79E-06	9.79E-06	.000000	.000000	.000000
61A	9.33E-06	9.33E-06	9.33E-06	.000000	.000000	.000000
545501	3.14E-05	3.14E-05	3.14E-05	.000000	.000000	.000000
545502	3.95E-05	3.95E-05	3.95E-05	.000000	.000000	.000000
545503	5.24E-05	5.24E-05	5.24E-05	.000000	.000000	.000000
545504	2.61E-05	2.61E-05	2.61E-05	.000000	.000000	.000000
545505	1.32E-05	1.32E-05	1.32E-05	.000000	.000000	.000000
545506	1.32E-05	1.32E-05	1.32E-05	.000000	.000000	.000000
555601	1.32E-05	1.32E-05	1.32E-05	.000000	.000000	.000000
555602	1.32E-05	1.32E-05	1.32E-05	.000000	.000000	.000000
555603	3.95E-05	3.95E-05	3.95E-05	.000000	.000000	.000000
555604	6.59E-05	6.59E-05	6.59E-05	.000000	.000000	.000000
555605	6.59E-05	6.59E-05	6.59E-05	.000000	.000000	.000000
555606	6.59E-05	6.59E-05	6.59E-05	.000000	.000000	.000000
555607	6.59E-05	6.59E-05	6.59E-05	.000000	.000000	.000000
555608	6.59E-05	6.59E-05	6.59E-05	.000000	.000000	.000000
555609	5.96E-05	5.96E-05	5.96E-05	.000000	.000000	.000000
555610	3.33E-05	3.33E-05	3.33E-05	.000000	.000000	.000000
555611	1.32E-05	1.32E-05	1.32E-05	.000000	.000000	.000000
555612	1.32E-05	1.32E-05	1.32E-05	.000000	.000000	.000000
565701	1.32E-05	1.32E-05	1.32E-05	.000000	.000000	.000000
565702	1.32E-05	1.32E-05	1.32E-05	.000000	.000000	.000000
565703	1.32E-05	1.32E-05	1.32E-05	.000000	.000000	.000000
565704	1.32E-05	1.32E-05	1.32E-05	.000000	.000000	.000000
565705	1.32E-05	1.32E-05	1.32E-05	.000000	.000000	.000000
565706	1.32E-05	1.32E-05	1.32E-05	.000000	.000000	.000000
575801	1.32E-05	1.32E-05	1.32E-05	.000000	.000000	.000000
575802	1.32E-05	1.32E-05	1.32E-05	.000000	.000000	.000000
575803	8.57E-06	8.57E-06	8.57E-06	.000000	.000000	.000000
585901	1.32E-05	1.32E-05	1.32E-05	.000000	.000000	.000000
585902	1.32E-05	1.32E-05	1.32E-05	.000000	.000000	.000000
585903	3.95E-05	3.95E-05	3.95E-05	.000000	.000000	.000000
585904	6.59E-05	6.59E-05	6.59E-05	.000000	.000000	.000000
585905	6.59E-05	6.59E-05	6.59E-05	.000000	.000000	.000000
585906	6.59E-05	6.59E-05	6.59E-05	.000000	.000000	.000000
585907	6.59E-05	6.59E-05	6.59E-05	.000000	.000000	.000000
585908	6.59E-05	6.59E-05	6.59E-05	.000000	.000000	.000000
585909	6.59E-05	6.59E-05	6.59E-05	.000000	.000000	.000000
585910	4.83E-05	4.83E-05	4.83E-05	.000000	.000000	.000000
585911	2.20E-05	2.20E-05	2.20E-05	.000000	.000000	.000000
585912	1.32E-05	1.32E-05	1.32E-05	.000000	.000000	.000000
585913	1.32E-05	1.32E-05	1.32E-05	.000000	.000000	.000000
596001	1.32E-05	1.32E-05	1.32E-05	.000000	.000000	.000000
596002	1.32E-05	1.32E-05	1.32E-05	.000000	.000000	.000000
596003	3.95E-05	3.95E-05	3.95E-05	.000000	.000000	.000000
596004	6.59E-05	6.59E-05	6.59E-05	.000000	.000000	.000000
596005	6.59E-05	6.59E-05	6.59E-05	.000000	.000000	.000000
596006	6.59E-05	6.59E-05	6.59E-05	.000000	.000000	.000000
596007	6.59E-05	6.59E-05	6.59E-05	.000000	.000000	.000000

596008	6.59E-05	6.59E-05	6.59E-05	.000000	.000000	.000000
596009	6.59E-05	6.59E-05	6.59E-05	.000000	.000000	.000000
596010	6.59E-05	6.59E-05	6.59E-05	.000000	.000000	.000000
596011	6.59E-05	6.59E-05	6.59E-05	.000000	.000000	.000000
596012	6.59E-05	6.59E-05	6.59E-05	.000000	.000000	.000000
596013	6.59E-05	6.59E-05	6.59E-05	.000000	.000000	.000000
596014	6.59E-05	6.59E-05	6.59E-05	.000000	.000000	.000000
596015	6.59E-05	6.59E-05	6.59E-05	.000000	.000000	.000000
596016	6.59E-05	6.59E-05	6.59E-05	.000000	.000000	.000000
596017	6.59E-05	6.59E-05	6.59E-05	.000000	.000000	.000000
596018	6.59E-05	6.59E-05	6.59E-05	.000000	.000000	.000000
596019	6.59E-05	6.59E-05	6.59E-05	.000000	.000000	.000000
596020	6.59E-05	6.59E-05	6.59E-05	.000000	.000000	.000000
596021	6.59E-05	6.59E-05	6.59E-05	.000000	.000000	.000000
596022	6.59E-05	6.59E-05	6.59E-05	.000000	.000000	.000000
596023	6.59E-05	6.59E-05	6.59E-05	.000000	.000000	.000000
596024	6.59E-05	6.59E-05	6.59E-05	.000000	.000000	.000000
596025	6.59E-05	6.59E-05	6.59E-05	.000000	.000000	.000000
596026	6.59E-05	6.59E-05	6.59E-05	.000000	.000000	.000000
596027	6.59E-05	6.59E-05	6.59E-05	.000000	.000000	.000000
596028	6.59E-05	6.59E-05	6.59E-05	.000000	.000000	.000000
596029	6.59E-05	6.59E-05	6.59E-05	.000000	.000000	.000000
596030	6.59E-05	6.59E-05	6.59E-05	.000000	.000000	.000000
596031	6.59E-05	6.59E-05	6.59E-05	.000000	.000000	.000000
596032	6.59E-05	6.59E-05	6.59E-05	.000000	.000000	.000000
596033	6.59E-05	6.59E-05	6.59E-05	.000000	.000000	.000000
596034	6.59E-05	6.59E-05	6.59E-05	.000000	.000000	.000000
596035	6.59E-05	6.59E-05	6.59E-05	.000000	.000000	.000000
596036	6.59E-05	6.59E-05	6.59E-05	.000000	.000000	.000000
596037	6.59E-05	6.59E-05	6.59E-05	.000000	.000000	.000000
596038	6.59E-05	6.59E-05	6.59E-05	.000000	.000000	.000000
596039	6.59E-05	6.59E-05	6.59E-05	.000000	.000000	.000000
596040	6.59E-05	6.59E-05	6.59E-05	.000000	.000000	.000000
596041	4.61E-05	4.61E-05	4.61E-05	.000000	.000000	.000000
596042	1.98E-05	1.98E-05	1.98E-05	.000000	.000000	.000000
596043	1.32E-05	1.32E-05	1.32E-05	.000000	.000000	.000000
596044	1.32E-05	1.32E-05	1.32E-05	.000000	.000000	.000000
606101	1.32E-05	1.32E-05	1.32E-05	.000000	.000000	.000000
606102	1.32E-05	1.32E-05	1.32E-05	.000000	.000000	.000000
606103	3.95E-05	3.95E-05	3.95E-05	.000000	.000000	.000000
606104	6.59E-05	6.59E-05	6.59E-05	.000000	.000000	.000000
606105	6.59E-05	6.59E-05	6.59E-05	.000000	.000000	.000000
606106	6.59E-05	6.59E-05	6.59E-05	.000000	.000000	.000000
606107	5.72E-05	5.72E-05	5.72E-05	.000000	.000000	.000000
606108	3.09E-05	3.09E-05	3.09E-05	.000000	.000000	.000000
606109	2.56E-05	2.56E-05	2.56E-05	.000000	.000000	.000000

T O T A L A S S E M B L E D J O I N T M A S S E S

IN GLOBAL COORDINATES

	UX	UY	UZ	RX	RY	RZ
TOTAL	0.004491	0.004491	0.004491	.000000	.000000	.000000

T O T A L A C C E L E R A T E D M A S S A N D L O C A T I O N

TOTAL MASS ACTIVATED BY ACCELERATION LOADS, IN GLOBAL COORDINATES

	UX	UY	UZ
MASS	0.004472	0.004472	0.004472
X-LOC	1005.700	1005.700	1005.700
Y-LOC	-218.865325	-218.865325	-218.865325
Z-LOC	-58.968321	-58.968321	-58.968321

Program SAP2000 Nonlinear Version 7.40 File:W Thermal @ 25 & 20 degF & 0.5K.OUT
Page
3

G L O B A L F O R C E B A L A N C E

TOTAL FORCE AND MOMENT AT THE ORIGIN, IN GLOBAL COORDINATES

LOAD LOAD1 ----------

	FX	FY	FZ	MX	MY	MZ
APPLIED	8.16E-34	5.55E-17	-1.731017	379.429807	1741.176	7.13E-14
SPRINGS	3.17E-05	-0.870969	1.700155	-416.757913	-1710.232	-942.082929
REACTNS	-3.17E-05	0.870969	0.030862	37.328106	-30.944627	942.082929
TOTAL	-3.95E-16	-6.66E-16	2.03E-15	5.68E-14	7.92E-13	-1.14E-13

LOAD LOAD2 ----------

	FX	FY	FZ	MX	MY	MZ
APPLIED	8.16E-34	5.55E-17	-1.731017	379.429807	1741.176	3.91E-14
SPRINGS	2.53E-05	-0.696775	1.700155	-407.594964	-1710.231	-753.666343
REACTNS	-2.53E-05	0.696775	0.030862	28.165157	-30.944895	753.666343
TOTAL	-8.36E-17	-6.66E-16	2.09E-15	9.95E-14	6.04E-14	-4.55E-13

SAP2000 v7.40 File: BW THERMAL @ 25 & 20 DEGF & 0.5K Kip-in Units PAGE 1
12/21/07 9:18:53

Sargent & Lundy LLC

S T A T I C L O A D C A S E S

STATIC CASE	CASE TYPE	SELF WT FACTOR
LOAD1	DEAD	1.0000
LOAD2	DEAD	1.0000

SAP2000 v7.40 File: BW THERMAL @ 25 & 20 DEGF & 0.5K Kip-in Units PAGE 2
12/21/07 9:18:53

Sargent & Lundy LLC

J O I N T D A T A

JOINT	GLOBAL-X	GLOBAL-Y	GLOBAL-Z	RESTRAINTS	ANGLE-A	ANGLE-B	ANGLE-C
54	0.00000	13.38000	-42.00000	0 0 0 0 0 0	0.000	0.000	0.000
55	0.00000	154.85000	-42.00000	0 0 0 0 0 0	0.000	0.000	0.000
56	360.48000	154.85000	-42.00000	0 0 0 0 0 0	0.000	0.000	0.000
57	360.48000	91.85000	-42.00000	0 0 0 0 0 0	0.000	0.000	0.000
58	360.48000	70.85000	-63.00000	0 0 0 0 0 0	0.000	0.000	0.000
59	360.48000	-319.15000	-63.00000	0 0 0 0 0 0	0.000	0.000	0.000
60	2142.48000	-319.15000	-63.00000	0 0 0 0 0 0	0.000	0.000	0.000
61	2142.48000	-594.30000	-63.00000	0 0 0 0 0 0	0.000	0.000	0.000
54A	0.00000	0.00000	-42.00000	1 1 1 1 1 1	0.000	0.000	0.000
61A	2142.48000	-607.05000	-63.00000	1 1 1 1 1 1	0.000	0.000	0.000
545501	0.00000	47.25000	-42.00000	0 0 0 0 0 0	90.000	0.000	0.000
545502	0.00000	56.25000	-42.00000	0 0 0 0 0 0	90.000	0.000	0.000
545503	0.00000	101.25000	-42.00000	0 0 0 0 0 0	90.000	0.000	0.000
545504	0.00000	127.85000	-42.00000	0 0 0 0 0 0	90.000	0.000	0.000

545505	0.00000	136.85000	-42.00000	0	0	0	0	0	0	90.000	0.000	0.000
545506	0.00000	145.85000	-42.00000	0	0	0	0	0	0	90.000	0.000	0.000
555601	9.00000	154.85000	-42.00000	0	0	0	0	0	0	0.000	0.000	0.000
555602	18.00000	154.85000	-42.00000	0	0	0	0	0	0	0.000	0.000	0.000
555603	27.00000	154.85000	-42.00000	0	0	0	0	0	0	0.000	0.000	0.000
555604	72.00000	154.85000	-42.00000	0	0	0	0	0	0	0.000	0.000	0.000
555605	117.00000	154.85000	-42.00000	0	0	0	0	0	0	0.000	0.000	0.000
555606	162.00000	154.85000	-42.00000	0	0	0	0	0	0	0.000	0.000	0.000
555607	207.00000	154.85000	-42.00000	0	0	0	0	0	0	0.000	0.000	0.000
555608	252.00000	154.85000	-42.00000	0	0	0	0	0	0	0.000	0.000	0.000
555609	297.00000	154.85000	-42.00000	0	0	0	0	0	0	0.000	0.000	0.000
555610	333.48000	154.85000	-42.00000	0	0	0	0	0	0	0.000	0.000	0.000
555611	342.48000	154.85000	-42.00000	0	0	0	0	0	0	0.000	0.000	0.000
555612	351.48000	154.85000	-42.00000	0	0	0	0	0	0	0.000	0.000	0.000
565701	360.48000	145.85000	-42.00000	0	0	0	0	0	0	-90.000	0.000	0.000
565702	360.48000	136.85000	-42.00000	0	0	0	0	0	0	-90.000	0.000	0.000
565703	360.48000	127.85000	-42.00000	0	0	0	0	0	0	-90.000	0.000	0.000
565704	360.48000	118.85000	-42.00000	0	0	0	0	0	0	-90.000	0.000	0.000
565705	360.48000	109.85000	-42.00000	0	0	0	0	0	0	-90.000	0.000	0.000
565706	360.48000	100.85000	-42.00000	0	0	0	0	0	0	-90.000	0.000	0.000
575801	360.48000	85.49000	-48.36000	0	0	0	0	0	0	-90.000	45.000	0.000
575802	360.48000	79.13000	-54.73000	0	0	0	0	0	0	-90.000	45.000	0.000
575803	360.48000	72.76000	-61.09000	0	0	0	0	0	0	-90.000	45.000	0.000
585901	360.48000	61.85000	-63.00000	0	0	0	0	0	0	-90.000	0.000	0.000
585902	360.48000	52.85000	-63.00000	0	0	0	0	0	0	-90.000	0.000	0.000
585903	360.48000	43.85000	-63.00000	0	0	0	0	0	0	-90.000	0.000	0.000
585904	360.48000	-1.15000	-63.00000	0	0	0	0	0	0	-90.000	0.000	0.000
585905	360.48000	-46.15000	-63.00000	0	0	0	0	0	0	-90.000	0.000	0.000
585906	360.48000	-91.15000	-63.00000	0	0	0	0	0	0	-90.000	0.000	0.000
585907	360.48000	-136.15000	-63.00000	0	0	0	0	0	0	-90.000	0.000	0.000
585908	360.48000	-181.15000	-63.00000	0	0	0	0	0	0	-90.000	0.000	0.000
585909	360.48000	-226.15000	-63.00000	0	0	0	0	0	0	-90.000	0.000	0.000
585910	360.48000	-271.15000	-63.00000	0	0	0	0	0	0	-90.000	0.000	0.000
585911	360.48000	-292.15000	-63.00000	0	0	0	0	0	0	-90.000	0.000	0.000
585912	360.48000	-301.15000	-63.00000	0	0	0	0	0	0	-90.000	0.000	0.000
585913	360.48000	-310.15000	-63.00000	0	0	0	0	0	0	-90.000	0.000	0.000
596001	369.48000	-319.15000	-63.00000	0	0	0	0	0	0	0.000	0.000	0.000
596002	378.48000	-319.15000	-63.00000	0	0	0	0	0	0	0.000	0.000	0.000
596003	387.48000	-319.15000	-63.00000	0	0	0	0	0	0	0.000	0.000	0.000
596004	432.48000	-319.15000	-63.00000	0	0	0	0	0	0	0.000	0.000	0.000
596005	477.48000	-319.15000	-63.00000	0	0	0	0	0	0	0.000	0.000	0.000
596006	522.48000	-319.15000	-63.00000	0	0	0	0	0	0	0.000	0.000	0.000
596007	567.48000	-319.15000	-63.00000	0	0	0	0	0	0	0.000	0.000	0.000
596008	612.48000	-319.15000	-63.00000	0	0	0	0	0	0	0.000	0.000	0.000
596009	657.48000	-319.15000	-63.00000	0	0	0	0	0	0	0.000	0.000	0.000
596010	702.48000	-319.15000	-63.00000	0	0	0	0	0	0	0.000	0.000	0.000
596011	747.48000	-319.15000	-63.00000	0	0	0	0	0	0	0.000	0.000	0.000
596012	792.48000	-319.15000	-63.00000	0	0	0	0	0	0	0.000	0.000	0.000
596013	837.48000	-319.15000	-63.00000	0	0	0	0	0	0	0.000	0.000	0.000
596014	882.48000	-319.15000	-63.00000	0	0	0	0	0	0	0.000	0.000	0.000
596015	927.48000	-319.15000	-63.00000	0	0	0	0	0	0	0.000	0.000	0.000
596016	972.48000	-319.15000	-63.00000	0	0	0	0	0	0	0.000	0.000	0.000
596017	1017.48000	-319.15000	-63.00000	0	0	0	0	0	0	0.000	0.000	0.000
596018	1062.48000	-319.15000	-63.00000	0	0	0	0	0	0	0.000	0.000	0.000
596019	1107.48000	-319.15000	-63.00000	0	0	0	0	0	0	0.000	0.000	0.000
596020	1152.48000	-319.15000	-63.00000	0	0	0	0	0	0	0.000	0.000	0.000
596021	1197.48000	-319.15000	-63.00000	0	0	0	0	0	0	0.000	0.000	0.000
596022	1242.48000	-319.15000	-63.00000	0	0	0	0	0	0	0.000	0.000	0.000
596023	1287.48000	-319.15000	-63.00000	0	0	0	0	0	0	0.000	0.000	0.000
596024	1332.48000	-319.15000	-63.00000	0	0	0	0	0	0	0.000	0.000	0.000
596025	1377.48000	-319.15000	-63.00000	0	0	0	0	0	0	0.000	0.000	0.000
596026	1422.48000	-319.15000	-63.00000	0	0	0	0	0	0	0.000	0.000	0.000
596027	1467.48000	-319.15000	-63.00000	0	0	0	0	0	0	0.000	0.000	0.000
596028	1512.48000	-319.15000	-63.00000	0	0	0	0	0	0	0.000	0.000	0.000
596029	1557.48000	-319.15000	-63.00000	0	0	0	0	0	0	0.000	0.000	0.000
596030	1602.48000	-319.15000	-63.00000	0	0	0	0	0	0	0.000	0.000	0.000

596031	1647.48000	-319.15000	-63.00000	0	0	0	0	0	0	0.000	0.000	0.000
596032	1692.48000	-319.15000	-63.00000	0	0	0	0	0	0	0.000	0.000	0.000
596033	1737.48000	-319.15000	-63.00000	0	0	0	0	0	0	0.000	0.000	0.000
596034	1782.48000	-319.15000	-63.00000	0	0	0	0	0	0	0.000	0.000	0.000
596035	1827.48000	-319.15000	-63.00000	0	0	0	0	0	0	0.000	0.000	0.000
596036	1872.48000	-319.15000	-63.00000	0	0	0	0	0	0	0.000	0.000	0.000
596037	1917.48000	-319.15000	-63.00000	0	0	0	0	0	0	0.000	0.000	0.000
596038	1962.48000	-319.15000	-63.00000	0	0	0	0	0	0	0.000	0.000	0.000
596039	2007.48000	-319.15000	-63.00000	0	0	0	0	0	0	0.000	0.000	0.000
596040	2052.48000	-319.15000	-63.00000	0	0	0	0	0	0	0.000	0.000	0.000
596041	2097.48000	-319.15000	-63.00000	0	0	0	0	0	0	0.000	0.000	0.000
596042	2115.48000	-319.15000	-63.00000	0	0	0	0	0	0	0.000	0.000	0.000
596043	2124.48000	-319.15000	-63.00000	0	0	0	0	0	0	0.000	0.000	0.000
596044	2133.48000	-319.15000	-63.00000	0	0	0	0	0	0	0.000	0.000	0.000
606101	2142.48000	-328.15000	-63.00000	0	0	0	0	0	0	-90.000	0.000	0.000
606102	2142.48000	-337.15000	-63.00000	0	0	0	0	0	0	-90.000	0.000	0.000
606103	2142.48000	-346.15000	-63.00000	0	0	0	0	0	0	-90.000	0.000	0.000
606104	2142.48000	-391.15000	-63.00000	0	0	0	0	0	0	-90.000	0.000	0.000
606105	2142.48000	-436.15000	-63.00000	0	0	0	0	0	0	-90.000	0.000	0.000
606106	2142.48000	-481.15000	-63.00000	0	0	0	0	0	0	-90.000	0.000	0.000
606107	2142.48000	-526.15000	-63.00000	0	0	0	0	0	0	-90.000	0.000	0.000
606108	2142.48000	-559.31000	-63.00000	0	0	0	0	0	0	-90.000	0.000	0.000
606109	2142.48000	-568.31000	-63.00000	0	0	0	0	0	0	-90.000	0.000	0.000

SAP2000 v7.40 File: BW THERMAL @ 25 & 20 DEGF & 0.5K Kip-in Units PAGE 3
12/21/07 9:18:53

Sargent & Lundy LLC

J O I N T S P R I N G D A T A

JOINT	K-U1	K-U2	K-U3	K-R1	K-R2	K-R3
545502	6.630	3.780	29.070	0.000	0.000	0.000
545503	7.540	4.300	33.040	0.000	0.000	0.000
545504	3.750	2.140	16.430	0.000	0.000	0.000
545505	1.900	1.080	8.310	0.000	0.000	0.000
545506	2.840	1.620	12.460	0.000	0.000	0.000
555601	2.840	1.620	12.460	0.000	0.000	0.000
555602	1.900	1.080	8.310	0.000	0.000	0.000
555603	5.690	3.240	24.920	0.000	0.000	0.000
555604	9.480	5.400	41.530	0.000	0.000	0.000
555605	9.480	5.400	41.530	0.000	0.000	0.000
555606	9.480	5.400	41.530	0.000	0.000	0.000
555607	9.480	5.400	41.530	0.000	0.000	0.000
555608	9.480	5.400	41.530	0.000	0.000	0.000
555609	8.580	4.890	37.600	0.000	0.000	0.000
555610	4.790	2.730	20.990	0.000	0.000	0.000
555611	1.900	1.080	8.310	0.000	0.000	0.000
555612	2.840	1.620	12.460	0.000	0.000	0.000
565701	2.840	1.620	12.460	0.000	0.000	0.000
565702	1.900	1.080	8.310	0.000	0.000	0.000
565703	1.900	1.080	8.310	0.000	0.000	0.000
565704	1.900	1.080	8.310	0.000	0.000	0.000
565705	1.900	1.080	8.310	0.000	0.000	0.000
565706	2.840	1.620	12.460	0.000	0.000	0.000
575801	2.840	1.620	12.460	0.000	0.000	0.000
575802	1.900	1.080	8.310	0.000	0.000	0.000
575803	1.520	0.860	6.640	0.000	0.000	0.000
585901	2.840	1.620	12.460	0.000	0.000	0.000
585902	1.900	1.080	8.310	0.000	0.000	0.000
585903	5.690	3.240	24.920	0.000	0.000	0.000
585904	9.480	5.400	41.530	0.000	0.000	0.000
585905	9.480	5.400	41.530	0.000	0.000	0.000
585906	9.480	5.400	41.530	0.000	0.000	0.000

585907	9.480	5.400	41.530	0.000	0.000	0.000
585908	9.480	5.400	41.530	0.000	0.000	0.000
585909	9.480	5.400	41.530	0.000	0.000	0.000
585910	6.950	3.960	30.440	0.000	0.000	0.000
585911	3.160	1.800	13.830	0.000	0.000	0.000
585912	1.900	1.080	8.310	0.000	0.000	0.000
585913	2.840	1.620	12.460	0.000	0.000	0.000
596001	2.840	1.620	12.460	0.000	0.000	0.000
596002	1.900	1.080	8.310	0.000	0.000	0.000
596003	5.690	3.240	24.920	0.000	0.000	0.000
596004	9.480	5.400	41.530	0.000	0.000	0.000
596005	9.480	5.400	41.530	0.000	0.000	0.000
596006	9.480	5.400	41.530	0.000	0.000	0.000
596007	9.480	5.400	41.530	0.000	0.000	0.000
596008	9.480	5.400	41.530	0.000	0.000	0.000
596009	9.480	5.400	41.530	0.000	0.000	0.000
596010	9.480	5.400	41.530	0.000	0.000	0.000
596011	9.480	5.400	41.530	0.000	0.000	0.000
596012	9.480	5.400	41.530	0.000	0.000	0.000
596013	9.480	5.400	41.530	0.000	0.000	0.000
596014	9.480	5.400	41.530	0.000	0.000	0.000
596015	9.480	5.400	41.530	0.000	0.000	0.000
596016	9.480	5.400	41.530	0.000	0.000	0.000
596017	9.480	5.400	41.530	0.000	0.000	0.000
596018	9.480	5.400	41.530	0.000	0.000	0.000
596019	9.480	5.400	41.530	0.000	0.000	0.000
596020	9.480	5.400	41.530	0.000	0.000	0.000
596021	9.480	5.400	41.530	0.000	0.000	0.000
596022	9.480	5.400	41.530	0.000	0.000	0.000
596023	9.480	5.400	41.530	0.000	0.000	0.000
596024	9.480	5.400	41.530	0.000	0.000	0.000
596025	9.480	5.400	41.530	0.000	0.000	0.000
596026	9.480	5.400	41.530	0.000	0.000	0.000
596027	9.480	5.400	41.530	0.000	0.000	0.000
596028	9.480	5.400	41.530	0.000	0.000	0.000
596029	9.480	5.400	41.530	0.000	0.000	0.000
596030	9.480	5.400	41.530	0.000	0.000	0.000
596031	9.480	5.400	41.530	0.000	0.000	0.000
596032	9.480	5.400	41.530	0.000	0.000	0.000
596033	9.480	5.400	41.530	0.000	0.000	0.000
596034	9.480	5.400	41.530	0.000	0.000	0.000
596035	9.480	5.400	41.530	0.000	0.000	0.000
596036	9.480	5.400	41.530	0.000	0.000	0.000
596037	9.480	5.400	41.530	0.000	0.000	0.000
596038	9.480	5.400	41.530	0.000	0.000	0.000
596039	9.480	5.400	41.530	0.000	0.000	0.000
596040	9.480	5.400	41.530	0.000	0.000	0.000
596041	6.630	3.780	29.070	0.000	0.000	0.000
596042	2.840	1.620	12.460	0.000	0.000	0.000
596043	1.900	1.080	8.310	0.000	0.000	0.000
596044	2.840	1.620	12.460	0.000	0.000	0.000
606101	2.840	1.620	12.460	0.000	0.000	0.000
606102	1.900	1.080	8.310	0.000	0.000	0.000
606103	5.690	3.240	24.920	0.000	0.000	0.000
606104	9.480	5.400	41.530	0.000	0.000	0.000
606105	9.480	5.400	41.530	0.000	0.000	0.000
606106	9.480	5.400	41.530	0.000	0.000	0.000
606107	8.230	4.690	36.070	0.000	0.000	0.000
606108	5.390	3.070	23.610	0.000	0.000	0.000

F R A M E E L E M E N T D A T A

FRAME	JNT-1	JNT-2	SECTION	ANGLE	RELEASES	SEGMENTS	R1	R2	FACTOR	LENGTH
1	54A	54	PIPEDR9	0.000	000000	2	0.000	0.000	0.000	13.380
2	54	545501	PIPEDR9	0.000	000000	2	0.000	0.000	0.000	33.870
3	545501	545502	PIPEDR9	0.000	000000	2	0.000	0.000	0.000	9.000
4	545502	545503	PIPEDR9	0.000	000000	2	0.000	0.000	0.000	45.000
5	545503	545504	PIPEDR9	0.000	000000	2	0.000	0.000	0.000	26.600
6	545504	545505	PIPEDR9	0.000	000000	2	0.000	0.000	0.000	9.000
7	545505	545506	PIPEDR9	0.000	000000	2	0.000	0.000	0.000	9.000
8	545506	55	PIPEDR9	0.000	000000	2	0.000	0.000	0.000	9.000
9	55	555601	PIPEDR9	0.000	000000	2	0.000	0.000	0.000	9.000
10	555601	555602	PIPEDR9	0.000	000000	2	0.000	0.000	0.000	9.000
11	555602	555603	PIPEDR9	0.000	000000	2	0.000	0.000	0.000	9.000
12	555603	555604	PIPEDR9	0.000	000000	2	0.000	0.000	0.000	45.000
13	555604	555605	PIPEDR9	0.000	000000	2	0.000	0.000	0.000	45.000
14	555605	555606	PIPEDR9	0.000	000000	2	0.000	0.000	0.000	45.000
15	555606	555607	PIPEDR9	0.000	000000	2	0.000	0.000	0.000	45.000
16	555607	555608	PIPEDR9	0.000	000000	2	0.000	0.000	0.000	45.000
17	555608	555609	PIPEDR9	0.000	000000	2	0.000	0.000	0.000	45.000
18	555609	555610	PIPEDR9	0.000	000000	2	0.000	0.000	0.000	36.480
19	555610	555611	PIPEDR9	0.000	000000	2	0.000	0.000	0.000	9.000
20	555611	555612	PIPEDR9	0.000	000000	2	0.000	0.000	0.000	9.000
21	555612	56	PIPEDR9	0.000	000000	2	0.000	0.000	0.000	9.000
22	56	565701	PIPEDR9	0.000	000000	2	0.000	0.000	0.000	9.000
23	565701	565702	PIPEDR9	0.000	000000	2	0.000	0.000	0.000	9.000
24	565702	565703	PIPEDR9	0.000	000000	2	0.000	0.000	0.000	9.000
25	565703	565704	PIPEDR9	0.000	000000	2	0.000	0.000	0.000	9.000
26	565704	565705	PIPEDR9	0.000	000000	2	0.000	0.000	0.000	9.000
27	565705	565706	PIPEDR9	0.000	000000	2	0.000	0.000	0.000	9.000
28	565706	57	PIPEDR9	0.000	000000	2	0.000	0.000	0.000	9.000
29	57	575801	PIPEDR9	0.000	000000	2	0.000	0.000	0.000	8.994
30	575801	575802	PIPEDR9	0.000	000000	2	0.000	0.000	0.000	9.001

31	575802	575803	PIPEDR9	0.000	000000	2	0.000	0.000	0.000	9.001
32	575803	58	PIPEDR9	0.000	000000	2	0.000	0.000	0.000	2.701
33	58	585901	PIPEDR9	0.000	000000	2	0.000	0.000	0.000	9.000
34	585901	585902	PIPEDR9	0.000	000000	2	0.000	0.000	0.000	9.000
35	585902	585903	PIPEDR9	0.000	000000	2	0.000	0.000	0.000	9.000
36	585903	585904	PIPEDR9	0.000	000000	2	0.000	0.000	0.000	45.000
37	585904	585905	PIPEDR9	0.000	000000	2	0.000	0.000	0.000	45.000
38	585905	585906	PIPEDR9	0.000	000000	2	0.000	0.000	0.000	45.000
39	585906	585907	PIPEDR9	0.000	000000	2	0.000	0.000	0.000	45.000
40	585907	585908	PIPEDR9	0.000	000000	2	0.000	0.000	0.000	45.000
41	585908	585909	PIPEDR9	0.000	000000	2	0.000	0.000	0.000	45.000
42	585909	585910	PIPEDR9	0.000	000000	2	0.000	0.000	0.000	45.000
43	585910	585911	PIPEDR9	0.000	000000	2	0.000	0.000	0.000	21.000
44	585911	585912	PIPEDR9	0.000	000000	2	0.000	0.000	0.000	9.000
45	585912	585913	PIPEDR9	0.000	000000	2	0.000	0.000	0.000	9.000
46	585913	59	PIPEDR9	0.000	000000	2	0.000	0.000	0.000	9.000
47	59	596001	PIPEDR9	0.000	000000	2	0.000	0.000	0.000	9.000
48	596001	596002	PIPEDR9	0.000	000000	2	0.000	0.000	0.000	9.000
49	596002	596003	PIPEDR9	0.000	000000	2	0.000	0.000	0.000	9.000
50	596003	596004	PIPEDR9	0.000	000000	2	0.000	0.000	0.000	45.000
51	596004	596005	PIPEDR9	0.000	000000	2	0.000	0.000	0.000	45.000
52	596005	596006	PIPEDR9	0.000	000000	2	0.000	0.000	0.000	45.000
53	596006	596007	PIPEDR9	0.000	000000	2	0.000	0.000	0.000	45.000
54	596007	596008	PIPEDR9	0.000	000000	2	0.000	0.000	0.000	45.000
55	596008	596009	PIPEDR9	0.000	000000	2	0.000	0.000	0.000	45.000
56	596009	596010	PIPEDR9	0.000	000000	2	0.000	0.000	0.000	45.000
57	596010	596011	PIPEDR9	0.000	000000	2	0.000	0.000	0.000	45.000
58	596011	596012	PIPEDR9	0.000	000000	2	0.000	0.000	0.000	45.000
59	596012	596013	PIPEDR9	0.000	000000	2	0.000	0.000	0.000	45.000
60	596013	596014	PIPEDR9	0.000	000000	2	0.000	0.000	0.000	45.000
61	596014	596015	PIPEDR9	0.000	000000	2	0.000	0.000	0.000	45.000
62	596015	596016	PIPEDR9	0.000	000000	2	0.000	0.000	0.000	45.000
63	596016	596017	PIPEDR9	0.000	000000	2	0.000	0.000	0.000	45.000

64	596017	596018	PIPEDR9	0.000	000000	2	0.000	0.000	0.000	45.000
65	596018	596019	PIPEDR9	0.000	000000	2	0.000	0.000	0.000	45.000
66	596019	596020	PIPEDR9	0.000	000000	2	0.000	0.000	0.000	45.000
67	596020	596021	PIPEDR9	0.000	000000	2	0.000	0.000	0.000	45.000
68	596021	596022	PIPEDR9	0.000	000000	2	0.000	0.000	0.000	45.000
69	596022	596023	PIPEDR9	0.000	000000	2	0.000	0.000	0.000	45.000
70	596023	596024	PIPEDR9	0.000	000000	2	0.000	0.000	0.000	45.000
71	596024	596025	PIPEDR9	0.000	000000	2	0.000	0.000	0.000	45.000
72	596025	596026	PIPEDR9	0.000	000000	2	0.000	0.000	0.000	45.000
73	596026	596027	PIPEDR9	0.000	000000	2	0.000	0.000	0.000	45.000
74	596027	596028	PIPEDR9	0.000	000000	2	0.000	0.000	0.000	45.000
75	596028	596029	PIPEDR9	0.000	000000	2	0.000	0.000	0.000	45.000
76	596029	596030	PIPEDR9	0.000	000000	2	0.000	0.000	0.000	45.000
77	596030	596031	PIPEDR9	0.000	000000	2	0.000	0.000	0.000	45.000
78	596031	596032	PIPEDR9	0.000	000000	2	0.000	0.000	0.000	45.000
79	596032	596033	PIPEDR9	0.000	000000	2	0.000	0.000	0.000	45.000
80	596033	596034	PIPEDR9	0.000	000000	2	0.000	0.000	0.000	45.000
81	596034	596035	PIPEDR9	0.000	000000	2	0.000	0.000	0.000	45.000
82	596035	596036	PIPEDR9	0.000	000000	2	0.000	0.000	0.000	45.000
83	596036	596037	PIPEDR9	0.000	000000	2	0.000	0.000	0.000	45.000
84	596037	596038	PIPEDR9	0.000	000000	2	0.000	0.000	0.000	45.000
85	596038	596039	PIPEDR9	0.000	000000	2	0.000	0.000	0.000	45.000
86	596039	596040	PIPEDR9	0.000	000000	2	0.000	0.000	0.000	45.000
87	596040	596041	PIPEDR9	0.000	000000	2	0.000	0.000	0.000	45.000
88	596041	596042	PIPEDR9	0.000	000000	2	0.000	0.000	0.000	18.000
89	596042	596043	PIPEDR9	0.000	000000	2	0.000	0.000	0.000	9.000
90	596043	596044	PIPEDR9	0.000	000000	2	0.000	0.000	0.000	9.000
91	596044	60	PIPEDR9	0.000	000000	2	0.000	0.000	0.000	9.000
92	60	606101	PIPEDR9	0.000	000000	2	0.000	0.000	0.000	9.000
93	606101	606102	PIPEDR9	0.000	000000	2	0.000	0.000	0.000	9.000
94	606102	606103	PIPEDR9	0.000	000000	2	0.000	0.000	0.000	9.000
95	606103	606104	PIPEDR9	0.000	000000	2	0.000	0.000	0.000	45.000
96	606104	606105	PIPEDR9	0.000	000000	2	0.000	0.000	0.000	45.000

97	606105	606106	PIPEDR9	0.000	000000	2	0.000	0.000	0.000	45.000
98	606106	606107	PIPEDR9	0.000	000000	2	0.000	0.000	0.000	45.000
99	606107	606108	PIPEDR9	0.000	000000	2	0.000	0.000	0.000	33.160
100	606108	606109	PIPEDR9	0.000	000000	2	0.000	0.000	0.000	9.000
101	606109	61	PIPEDR9	0.000	000000	2	0.000	0.000	0.000	25.990
102	61	61A	PIPEDR9	0.000	000000	2	0.000	0.000	0.000	12.750

SAP2000 v7.40 File: BW THERMAL @ 25 & 20 DEGF & 0.5K Kip-in Units PAGE 5
12/21/07 9:18:53

Sargent & Lundy LLC

M A T E R I A L P R O P E R T Y D A T A

MAT LABEL	MODULUS OF ELASTICITY	POISSON'S RATIO	THERMAL COEFF	WEIGHT PER UNIT VOL	MASS PER UNIT VOL
PE	28.000	0.420	1.000E-04	8.980E-05	2.330E-07
STEEL	29000.000	0.300	6.500E-06	2.830E-04	7.324E-07
CONC	3600.000	0.200	5.500E-06	8.680E-05	2.246E-07

SAP2000 v7.40 File: BW THERMAL @ 25 & 20 DEGF & 0.5K Kip-in Units PAGE 6
12/21/07 9:18:53

Sargent & Lundy LLC

M A T E R I A L D E S I G N D A T A

MAT LABEL	DESIGN CODE	STEEL FY	CONCRETE FC	REBAR FY	CONCRETE FCS	REBAR FYS
PE	N					
STEEL	S	36.000				
CONC	C		4.000	60.000	4.000	40.000

SAP2000 v7.40 File: BW THERMAL @ 25 & 20 DEGF & 0.5K Kip-in Units PAGE 7
12/21/07 9:18:54

Sargent & Lundy LLC

F R A M E S E C T I O N P R O P E R T Y D A T A

SECTION LABEL	MAT LABEL	SECTION TYPE	DEPTH	FLANGE WIDTH TOP	FLANGE THICK TOP	WEB THICK	FLANGE WIDTH BOTTOM	FLANGE THICK BOTTOM
PIPEDR9	PE		4.500	4.500	0.500	0.500	0.000	0.000

SAP2000 v7.40 File: BW THERMAL @ 25 & 20 DEGF & 0.5K Kip-in Units PAGE 8
12/21/07 9:18:54

Sargent & Lundy LLC

F R A M E S E C T I O N P R O P E R T Y D A T A

SECTION LABEL	AREA	TORSIONAL INERTIA	MOMENTS OF INERTIA I33	I22	SHEAR AREAS A2	A3
PIPEDR9	6.283	25.525	12.763	12.763	3.700	3.700

SAP2000 v7.40 File: BW THERMAL @ 25 & 20 DEGF & 0.5K Kip-in Units PAGE 9
12/21/07 9:18:54

Sargent & Lundy LLC

F R A M E S E C T I O N P R O P E R T Y D A T A

SECTION LABEL	SECTION MODULII S33	S22	PLASTIC MODULII Z33	Z22	RADII OF GYRATION R33	R22
PIPEDR9	5.672	5.672	8.042	8.042	1.425	1.425

SAP2000 v7.40 File: BW THERMAL @ 25 & 20 DEGF & 0.5K Kip-in Units PAGE 10
12/21/07 9:18:54

Sargent & Lundy LLC

F R A M E S E C T I O N P R O P E R T Y D A T A

SECTION LABEL	TOTAL WEIGHT	TOTAL MASS
PIPEDR9	1.731	4.491E-03

SAP2000 v7.40 File: BW THERMAL @ 25 & 20 DEGF & 0.5K Kip-in Units PAGE 11
12/21/07 9:18:54

Sargent & Lundy LLC

S H E L L S E C T I O N P R O P E R T Y D A T A

SECTION LABEL	MAT LABEL	SHELL TYPE	MEMBRANE THICK	BENDING THICK	MATERIAL ANGLE
SSEC1	STEEL	4	1.000	1.000	0.000

SAP2000 v7.40 File: BW THERMAL @ 25 & 20 DEGF & 0.5K Kip-in Units PAGE 12
12/21/07 9:18:54

Sargent & Lundy LLC

S H E L L S E C T I O N P R O P E R T Y D A T A

SECTION LABEL	TOTAL WEIGHT	TOTAL MASS
SSEC1	0.000	0.000

SAP2000 v7.40 File: BW THERMAL @ 25 & 20 DEGF & 0.5K Kip-in Units PAGE 13
12/21/07 9:18:54

Sargent & Lundy LLC

F R A M E T H E R M A L L O A D S Load Case LOAD1

FRAME	TYPE	VALUE	PATTERN	MULTIPLIER
1	TEMPERATURE	25.0000		
2	TEMPERATURE	25.0000		
3	TEMPERATURE	25.0000		
4	TEMPERATURE	25.0000		
5	TEMPERATURE	25.0000		
6	TEMPERATURE	25.0000		
7	TEMPERATURE	25.0000		
8	TEMPERATURE	25.0000		
9	TEMPERATURE	25.0000		
10	TEMPERATURE	25.0000		
11	TEMPERATURE	25.0000		
12	TEMPERATURE	25.0000		
13	TEMPERATURE	25.0000		
14	TEMPERATURE	25.0000		
15	TEMPERATURE	25.0000		
16	TEMPERATURE	25.0000		
17	TEMPERATURE	25.0000		
18	TEMPERATURE	25.0000		
19	TEMPERATURE	25.0000		
20	TEMPERATURE	25.0000		
21	TEMPERATURE	25.0000		
22	TEMPERATURE	25.0000		
23	TEMPERATURE	25.0000		
24	TEMPERATURE	25.0000		
25	TEMPERATURE	25.0000		
26	TEMPERATURE	25.0000		
27	TEMPERATURE	25.0000		
28	TEMPERATURE	25.0000		
29	TEMPERATURE	25.0000		
30	TEMPERATURE	25.0000		
31	TEMPERATURE	25.0000		
32	TEMPERATURE	25.0000		
33	TEMPERATURE	25.0000		
34	TEMPERATURE	25.0000		
35	TEMPERATURE	25.0000		
36	TEMPERATURE	25.0000		
37	TEMPERATURE	25.0000		
38	TEMPERATURE	25.0000		
39	TEMPERATURE	25.0000		
40	TEMPERATURE	25.0000		
41	TEMPERATURE	25.0000		
42	TEMPERATURE	25.0000		
43	TEMPERATURE	25.0000		
44	TEMPERATURE	25.0000		
45	TEMPERATURE	25.0000		
46	TEMPERATURE	25.0000		
47	TEMPERATURE	25.0000		
48	TEMPERATURE	25.0000		
49	TEMPERATURE	25.0000		
50	TEMPERATURE	25.0000		
51	TEMPERATURE	25.0000		
52	TEMPERATURE	25.0000		
53	TEMPERATURE	25.0000		
54	TEMPERATURE	25.0000		
55	TEMPERATURE	25.0000		
56	TEMPERATURE	25.0000		
57	TEMPERATURE	25.0000		
58	TEMPERATURE	25.0000		
59	TEMPERATURE	25.0000		
60	TEMPERATURE	25.0000		
61	TEMPERATURE	25.0000		
62	TEMPERATURE	25.0000		
63	TEMPERATURE	25.0000		

64	TEMPERATURE	25.0000
65	TEMPERATURE	25.0000
66	TEMPERATURE	25.0000
67	TEMPERATURE	25.0000
68	TEMPERATURE	25.0000
69	TEMPERATURE	25.0000
70	TEMPERATURE	25.0000
71	TEMPERATURE	25.0000
72	TEMPERATURE	25.0000
73	TEMPERATURE	25.0000
74	TEMPERATURE	25.0000
75	TEMPERATURE	25.0000
76	TEMPERATURE	25.0000
77	TEMPERATURE	25.0000
78	TEMPERATURE	25.0000
79	TEMPERATURE	25.0000
80	TEMPERATURE	25.0000
81	TEMPERATURE	25.0000
82	TEMPERATURE	25.0000
83	TEMPERATURE	25.0000
84	TEMPERATURE	25.0000
85	TEMPERATURE	25.0000
86	TEMPERATURE	25.0000
87	TEMPERATURE	25.0000
88	TEMPERATURE	25.0000
89	TEMPERATURE	25.0000
90	TEMPERATURE	25.0000
91	TEMPERATURE	25.0000
92	TEMPERATURE	25.0000
93	TEMPERATURE	25.0000
94	TEMPERATURE	25.0000
95	TEMPERATURE	25.0000
96	TEMPERATURE	25.0000
97	TEMPERATURE	25.0000
98	TEMPERATURE	25.0000
99	TEMPERATURE	25.0000
100	TEMPERATURE	25.0000
101	TEMPERATURE	25.0000
102	TEMPERATURE	25.0000

SAP2000 v7.40 File: BW THERMAL @ 25 & 20 DEGF & 0.5K Kip-in Units PAGE 14
12/21/07 9:18:54

Sargent & Lundy LLC

F R A M E T H E R M A L L O A D S Load Case LOAD2

FRAME	TYPE	VALUE	PATTERN	MULTIPLIER
1	TEMPERATURE	20.0000		
2	TEMPERATURE	20.0000		
3	TEMPERATURE	20.0000		
4	TEMPERATURE	20.0000		
5	TEMPERATURE	20.0000		
6	TEMPERATURE	20.0000		
7	TEMPERATURE	20.0000		
8	TEMPERATURE	20.0000		
9	TEMPERATURE	20.0000		
10	TEMPERATURE	20.0000		
11	TEMPERATURE	20.0000		
12	TEMPERATURE	20.0000		
13	TEMPERATURE	20.0000		
14	TEMPERATURE	20.0000		
15	TEMPERATURE	20.0000		
16	TEMPERATURE	20.0000		

17	TEMPERATURE	20.0000
18	TEMPERATURE	20.0000
19	TEMPERATURE	20.0000
20	TEMPERATURE	20.0000
21	TEMPERATURE	20.0000
22	TEMPERATURE	20.0000
23	TEMPERATURE	20.0000
24	TEMPERATURE	20.0000
25	TEMPERATURE	20.0000
26	TEMPERATURE	20.0000
27	TEMPERATURE	20.0000
28	TEMPERATURE	20.0000
29	TEMPERATURE	20.0000
30	TEMPERATURE	20.0000
31	TEMPERATURE	20.0000
32	TEMPERATURE	20.0000
33	TEMPERATURE	20.0000
34	TEMPERATURE	20.0000
35	TEMPERATURE	20.0000
36	TEMPERATURE	20.0000
37	TEMPERATURE	20.0000
38	TEMPERATURE	20.0000
39	TEMPERATURE	20.0000
40	TEMPERATURE	20.0000
41	TEMPERATURE	20.0000
42	TEMPERATURE	20.0000
43	TEMPERATURE	20.0000
44	TEMPERATURE	20.0000
45	TEMPERATURE	20.0000
46	TEMPERATURE	20.0000
47	TEMPERATURE	20.0000
48	TEMPERATURE	20.0000
49	TEMPERATURE	20.0000
50	TEMPERATURE	20.0000
51	TEMPERATURE	20.0000
52	TEMPERATURE	20.0000
53	TEMPERATURE	20.0000
54	TEMPERATURE	20.0000
55	TEMPERATURE	20.0000
56	TEMPERATURE	20.0000
57	TEMPERATURE	20.0000
58	TEMPERATURE	20.0000
59	TEMPERATURE	20.0000
60	TEMPERATURE	20.0000
61	TEMPERATURE	20.0000
62	TEMPERATURE	20.0000
63	TEMPERATURE	20.0000
64	TEMPERATURE	20.0000
65	TEMPERATURE	20.0000
66	TEMPERATURE	20.0000
67	TEMPERATURE	20.0000
68	TEMPERATURE	20.0000
69	TEMPERATURE	20.0000
70	TEMPERATURE	20.0000
71	TEMPERATURE	20.0000
72	TEMPERATURE	20.0000
73	TEMPERATURE	20.0000
74	TEMPERATURE	20.0000
75	TEMPERATURE	20.0000
76	TEMPERATURE	20.0000
77	TEMPERATURE	20.0000
78	TEMPERATURE	20.0000
79	TEMPERATURE	20.0000
80	TEMPERATURE	20.0000
81	TEMPERATURE	20.0000
82	TEMPERATURE	20.0000

83	TEMPERATURE	20.0000
84	TEMPERATURE	20.0000
85	TEMPERATURE	20.0000
86	TEMPERATURE	20.0000
87	TEMPERATURE	20.0000
88	TEMPERATURE	20.0000
89	TEMPERATURE	20.0000
90	TEMPERATURE	20.0000
91	TEMPERATURE	20.0000
92	TEMPERATURE	20.0000
93	TEMPERATURE	20.0000
94	TEMPERATURE	20.0000
95	TEMPERATURE	20.0000
96	TEMPERATURE	20.0000
97	TEMPERATURE	20.0000
98	TEMPERATURE	20.0000
99	TEMPERATURE	20.0000
100	TEMPERATURE	20.0000
101	TEMPERATURE	20.0000
102	TEMPERATURE	20.0000

SAP2000 v7.40 File: BW THERMAL @ 25 & 20 DEGF & 0.5K Kip-in Units PAGE 1
12/21/07 9:19:20

Sargent & Lundy LLC

J O I N T D I S P L A C E M E N T S

JOINT	LOAD	U1	U2	U3	R1	R2	R3
54	LOAD1	1.178E-04	6.518E-04	-0.0283	-2.475E-03	-4.183E-05	-1.329E-05
54	LOAD2	9.425E-05	5.214E-04	-0.0283	-2.475E-03	-4.183E-05	-1.063E-05
55	LOAD1	-0.0662	0.0674	-5.350E-03	-4.873E-04	-4.841E-04	-4.332E-05
55	LOAD2	-0.0530	0.0539	-5.350E-03	-4.873E-04	-4.841E-04	-3.466E-05
56	LOAD1	0.0670	0.0613	-5.092E-03	-4.592E-04	4.483E-04	-2.617E-04
56	LOAD2	0.0536	0.0490	-5.084E-03	-4.583E-04	4.469E-04	-2.095E-04
57	LOAD1	6.577E-04	-0.0258	0.0604	-2.255E-05	1.632E-04	6.728E-05
57	LOAD2	5.902E-04	-0.0207	0.0478	-1.267E-05	1.514E-04	6.099E-05
58	LOAD1	-1.846E-04	0.0244	-0.0375	1.238E-03	5.590E-05	2.989E-05
58	LOAD2	-1.654E-04	0.0194	-0.0304	9.866E-04	4.965E-05	2.708E-05
59	LOAD1	-0.0662	-0.0675	-5.336E-03	4.827E-04	-4.880E-04	4.456E-05
59	LOAD2	-0.0530	-0.0540	-5.337E-03	4.827E-04	-4.881E-04	3.564E-05
60	LOAD1	0.0675	0.0662	-5.319E-03	-4.888E-04	4.768E-04	-4.372E-05
60	LOAD2	0.0540	0.0530	-5.319E-03	-4.888E-04	4.768E-04	-3.497E-05
61	LOAD1	1.234E-06	7.754E-06	-0.0194	-1.634E-03	2.112E-05	0.0000
61	LOAD2	0.0000	6.204E-06	-0.0194	-1.634E-03	2.112E-05	0.0000
54A	LOAD1	0.0000	0.0000	0.0000	0.0000	0.0000	0.0000
54A	LOAD2	0.0000	0.0000	0.0000	0.0000	0.0000	0.0000
61A	LOAD1	0.0000	0.0000	0.0000	0.0000	0.0000	0.0000
61A	LOAD2	0.0000	0.0000	0.0000	0.0000	0.0000	0.0000
545501	LOAD1	2.302E-03	-2.662E-04	-0.0212	-1.477E-04	-2.489E-03	2.294E-05
545501	LOAD2	1.841E-03	-2.130E-04	-0.0212	-1.477E-04	-2.489E-03	1.835E-05
545502	LOAD1	2.740E-03	4.631E-05	-1.012E-03	-1.759E-04	-8.047E-04	4.941E-05

545502	LOAD2	2.192E-03	3.705E-05	-1.012E-03	-1.759E-04	-8.047E-04	3.953E-05
545503	LOAD1	9.579E-03	-2.906E-04	-6.279E-04	-3.166E-04	-6.086E-04	-2.081E-04
545503	LOAD2	7.663E-03	-2.325E-04	-6.279E-04	-3.166E-04	-6.086E-04	-1.665E-04
545504	LOAD1	0.0245	-2.157E-03	-5.444E-04	-3.997E-04	-1.453E-04	4.933E-04
545504	LOAD2	0.0196	-1.726E-03	-5.444E-04	-3.997E-04	-1.453E-04	3.946E-04
545505	LOAD1	0.0343	5.550E-03	-2.742E-04	-4.279E-04	7.089E-06	1.749E-03
545505	LOAD2	0.0274	4.440E-03	-2.742E-04	-4.279E-04	7.089E-06	1.400E-03
545506	LOAD1	0.0474	0.0298	-7.757E-04	-4.560E-04	2.855E-04	3.623E-03
545506	LOAD2	0.0379	0.0239	-7.757E-04	-4.560E-04	2.855E-04	2.899E-03
555601	LOAD1	-0.0462	0.0303	-7.003E-04	-4.866E-04	-3.226E-04	-3.668E-03
555601	LOAD2	-0.0370	0.0242	-7.003E-04	-4.866E-04	-3.226E-04	-2.934E-03
555602	LOAD1	-0.0329	5.946E-03	3.409E-04	-4.859E-04	-2.005E-05	-1.752E-03
555602	LOAD2	-0.0263	4.756E-03	3.409E-04	-4.859E-04	-2.005E-05	-1.402E-03
555603	LOAD1	-0.0228	-1.863E-03	-8.532E-04	-4.852E-04	9.067E-04	-5.865E-04
555603	LOAD2	-0.0182	-1.490E-03	-8.532E-04	-4.852E-04	9.067E-04	-4.692E-04
555604	LOAD1	-5.439E-03	-1.136E-04	-6.320E-04	-4.817E-04	-2.349E-04	1.822E-04
555604	LOAD2	-4.352E-03	-9.086E-05	-6.320E-04	-4.815E-04	-2.349E-04	1.458E-04
555605	LOAD1	-1.278E-03	2.981E-05	-6.060E-04	-4.782E-04	5.800E-05	-4.503E-05
555605	LOAD2	-1.022E-03	2.385E-05	-6.060E-04	-4.779E-04	5.800E-05	-3.602E-05
555606	LOAD1	-2.153E-04	-5.573E-06	-6.133E-04	-4.747E-04	-8.806E-06	1.339E-05
555606	LOAD2	-1.723E-04	-4.458E-06	-6.133E-04	-4.743E-04	-8.806E-06	1.072E-05
555607	LOAD1	3.252E-04	-5.561E-06	-6.088E-04	-4.712E-04	-2.100E-05	-1.338E-05
555607	LOAD2	2.601E-04	-4.449E-06	-6.088E-04	-4.707E-04	-2.100E-05	-1.071E-05
555608	LOAD1	1.654E-03	2.999E-05	-6.201E-04	-4.677E-04	9.704E-05	4.498E-05
555608	LOAD2	1.323E-03	2.399E-05	-6.201E-04	-4.671E-04	9.704E-05	3.599E-05
555609	LOAD1	6.994E-03	-1.595E-04	-6.377E-04	-4.642E-04	-3.826E-04	-1.852E-04
555609	LOAD2	5.595E-03	-1.276E-04	-6.377E-04	-4.634E-04	-3.826E-04	-1.481E-04
555610	LOAD1	0.0238	-1.817E-03	-7.113E-04	-4.614E-04	-4.764E-04	5.321E-04
555610	LOAD2	0.0190	-1.454E-03	-7.113E-04	-4.605E-04	-4.764E-04	4.257E-04
555611	LOAD1	0.0337	5.631E-03	-2.271E-05	-4.607E-04	1.078E-05	1.643E-03
555611	LOAD2	0.0270	4.505E-03	-2.307E-05	-4.598E-04	1.079E-05	1.314E-03
555612	LOAD1	0.0470	0.0282	-7.316E-04	-4.600E-04	2.868E-04	3.335E-03
555612	LOAD2	0.0376	0.0226	-7.314E-04	-4.590E-04	2.864E-04	2.668E-03
565701	LOAD1	-0.0412	0.0294	-7.672E-04	-4.076E-04	-2.652E-04	-3.696E-03
565701	LOAD2	-0.0329	0.0235	-7.674E-04	-4.047E-04	-2.644E-04	-2.957E-03
565702	LOAD1	-0.0270	4.954E-03	-3.759E-04	-3.668E-04	0.0000	-1.725E-03
565702	LOAD2	-0.0216	3.963E-03	-3.824E-04	-3.625E-04	0.0000	-1.380E-03
565703	LOAD1	-0.0155	-2.164E-03	-5.867E-04	-3.261E-04	4.954E-05	-3.475E-04
565703	LOAD2	-0.0124	-1.733E-03	-5.844E-04	-3.203E-04	4.199E-05	-2.782E-04
565704	LOAD1	-5.467E-03	-2.070E-03	-1.292E-03	-2.854E-04	1.284E-04	9.463E-05
565704	LOAD2	-4.366E-03	-1.660E-03	-1.153E-03	-2.780E-04	1.020E-04	7.552E-05
565705	LOAD1	4.025E-03	-8.042E-04	-2.412E-03	-2.446E-04	-3.817E-04	1.198E-04
565705	LOAD2	3.230E-03	-6.477E-04	-2.035E-03	-2.358E-04	-3.054E-04	9.667E-05
565706	LOAD1	0.0139	3.366E-05	7.987E-03	-2.039E-04	-3.818E-03	7.998E-05

565706	LOAD2	0.0111	3.849E-05	6.254E-03	-1.936E-04	-3.032E-03	6.776E-05
575801	LOAD1	-0.0127	1.405E-04	8.793E-03	-1.320E-04	3.902E-03	-3.862E-05
575801	LOAD2	-9.794E-03	1.186E-04	6.935E-03	-1.211E-04	3.107E-03	-3.481E-05
575802	LOAD1	-2.913E-03	-4.195E-05	-4.298E-03	-1.010E-04	1.748E-03	-1.423E-05
575802	LOAD2	-2.001E-03	-4.229E-05	-3.524E-03	-9.204E-05	1.402E-03	-1.239E-05
575803	LOAD1	6.393E-03	-1.369E-04	-0.0252	-6.997E-05	2.712E-03	-1.530E-05
575803	LOAD2	5.436E-03	-1.239E-04	-0.0203	-6.298E-05	2.172E-03	-1.326E-05
585901	LOAD1	-0.0170	-1.208E-05	-6.295E-03	-4.334E-05	-2.411E-03	1.103E-05
585901	LOAD2	-0.0135	-1.015E-05	-5.140E-03	-3.724E-05	-1.953E-03	9.896E-06
585902	LOAD1	-0.0121	2.103E-05	1.130E-03	-3.079E-05	-2.695E-04	0.0000
585902	LOAD2	-9.639E-03	1.920E-05	9.428E-04	-2.483E-05	-2.192E-04	0.0000
585903	LOAD1	-8.386E-03	7.912E-06	-7.154E-04	-1.824E-05	9.881E-04	-1.345E-06
585903	LOAD2	-6.678E-03	7.121E-06	-7.447E-04	-1.242E-05	9.692E-04	-1.233E-06
585904	LOAD1	-2.001E-03	0.0000	-6.337E-04	4.452E-05	-2.538E-04	0.0000
585904	LOAD2	-1.594E-03	0.0000	-6.333E-04	4.963E-05	-2.495E-04	0.0000
585905	LOAD1	-4.698E-04	0.0000	-6.058E-04	1.073E-04	6.518E-05	0.0000
585905	LOAD2	-3.741E-04	0.0000	-6.059E-04	1.117E-04	6.409E-05	0.0000
585906	LOAD1	-7.750E-05	0.0000	-6.125E-04	1.700E-04	-2.004E-05	0.0000
585906	LOAD2	-6.159E-05	0.0000	-6.125E-04	1.737E-04	-1.977E-05	0.0000
585907	LOAD1	1.269E-04	-1.814E-06	-6.123E-04	2.328E-04	1.904E-05	-2.663E-06
585907	LOAD2	1.016E-04	-1.451E-06	-6.123E-04	2.358E-04	1.897E-05	-2.131E-06
585908	LOAD1	6.389E-04	7.483E-06	-6.063E-04	2.956E-04	-5.995E-05	1.096E-05
585908	LOAD2	5.112E-04	5.986E-06	-6.063E-04	2.978E-04	-5.993E-05	8.766E-06
585909	LOAD1	2.700E-03	-3.219E-05	-6.318E-04	3.583E-04	2.329E-04	-4.522E-05
585909	LOAD2	2.160E-03	-2.575E-05	-6.318E-04	3.599E-04	2.329E-04	-3.618E-05
585910	LOAD1	0.0113	4.262E-04	-6.970E-04	4.211E-04	-9.070E-04	2.068E-04
585910	LOAD2	9.047E-03	3.410E-04	-6.970E-04	4.219E-04	-9.070E-04	1.654E-04
585911	LOAD1	0.0247	2.175E-03	-3.547E-04	4.504E-04	2.145E-05	-4.431E-04
585911	LOAD2	0.0198	1.740E-03	-3.547E-04	4.509E-04	2.145E-05	-3.545E-04
585912	LOAD1	0.0344	-5.416E-03	-3.868E-04	4.629E-04	1.188E-05	-1.750E-03
585912	LOAD2	0.0276	-4.333E-03	-3.867E-04	4.633E-04	1.189E-05	-1.400E-03
585913	LOAD1	0.0475	-0.0298	-7.954E-04	4.755E-04	2.778E-04	-3.631E-03
585913	LOAD2	0.0380	-0.0238	-7.954E-04	4.757E-04	2.778E-04	-2.905E-03
596001	LOAD1	-0.0462	-0.0303	-6.958E-04	4.778E-04	-3.216E-04	3.674E-03
596001	LOAD2	-0.0370	-0.0243	-6.958E-04	4.778E-04	-3.216E-04	2.939E-03
596002	LOAD1	-0.0329	-5.954E-03	3.409E-04	4.729E-04	-1.982E-05	1.755E-03
596002	LOAD2	-0.0263	-4.763E-03	3.409E-04	4.729E-04	-1.982E-05	1.404E-03
596003	LOAD1	-0.0228	1.866E-03	-8.533E-04	4.680E-04	9.068E-04	5.873E-04
596003	LOAD2	-0.0182	1.493E-03	-8.533E-04	4.680E-04	9.068E-04	4.699E-04
596004	LOAD1	-5.444E-03	1.139E-04	-6.320E-04	4.434E-04	-2.353E-04	-1.823E-04
596004	LOAD2	-4.356E-03	9.108E-05	-6.320E-04	4.435E-04	-2.353E-04	-1.459E-04
596005	LOAD1	-1.301E-03	-3.029E-05	-6.061E-04	4.189E-04	5.959E-05	4.446E-05
596005	LOAD2	-1.041E-03	-2.423E-05	-6.061E-04	4.190E-04	5.959E-05	3.557E-05
596006	LOAD1	-3.107E-04	7.368E-06	-6.127E-04	3.944E-04	-1.509E-05	-1.080E-05

596006	LOAD2	-2.486E-04	5.894E-06	-6.127E-04	3.944E-04	-1.509E-05	-8.637E-06
596007	LOAD1	-7.423E-05	-1.789E-06	-6.110E-04	3.698E-04	3.822E-06	2.622E-06
596007	LOAD2	-5.938E-05	-1.431E-06	-6.110E-04	3.699E-04	3.822E-06	2.097E-06
596008	LOAD1	-1.773E-05	0.0000	-6.115E-04	3.453E-04	0.0000	0.0000
596008	LOAD2	-1.419E-05	0.0000	-6.115E-04	3.454E-04	0.0000	0.0000
596009	LOAD1	-4.236E-06	0.0000	-6.114E-04	3.208E-04	0.0000	0.0000
596009	LOAD2	-3.389E-06	0.0000	-6.114E-04	3.208E-04	0.0000	0.0000
596010	LOAD1	-1.012E-06	0.0000	-6.114E-04	2.962E-04	0.0000	0.0000
596010	LOAD2	0.0000	0.0000	-6.114E-04	2.963E-04	0.0000	0.0000
596011	LOAD1	0.0000	0.0000	-6.114E-04	2.717E-04	0.0000	0.0000
596011	LOAD2	0.0000	0.0000	-6.114E-04	2.718E-04	0.0000	0.0000
596012	LOAD1	0.0000	0.0000	-6.114E-04	2.472E-04	0.0000	0.0000
596012	LOAD2	0.0000	0.0000	-6.114E-04	2.472E-04	0.0000	0.0000
596013	LOAD1	0.0000	0.0000	-6.114E-04	2.226E-04	0.0000	0.0000
596013	LOAD2	0.0000	0.0000	-6.114E-04	2.227E-04	0.0000	0.0000
596014	LOAD1	0.0000	0.0000	-6.114E-04	1.981E-04	0.0000	0.0000
596014	LOAD2	0.0000	0.0000	-6.114E-04	1.981E-04	0.0000	0.0000
596015	LOAD1	0.0000	0.0000	-6.114E-04	1.736E-04	0.0000	0.0000
596015	LOAD2	0.0000	0.0000	-6.114E-04	1.736E-04	0.0000	0.0000
596016	LOAD1	0.0000	0.0000	-6.114E-04	1.490E-04	0.0000	0.0000
596016	LOAD2	0.0000	0.0000	-6.114E-04	1.491E-04	0.0000	0.0000
596017	LOAD1	0.0000	0.0000	-6.114E-04	1.245E-04	0.0000	0.0000
596017	LOAD2	0.0000	0.0000	-6.114E-04	1.245E-04	0.0000	0.0000
596018	LOAD1	0.0000	0.0000	-6.114E-04	9.998E-05	0.0000	0.0000
596018	LOAD2	0.0000	0.0000	-6.114E-04	1.000E-04	0.0000	0.0000
596019	LOAD1	0.0000	0.0000	-6.114E-04	7.545E-05	0.0000	0.0000
596019	LOAD2	0.0000	0.0000	-6.114E-04	7.548E-05	0.0000	0.0000
596020	LOAD1	0.0000	0.0000	-6.114E-04	5.091E-05	0.0000	0.0000
596020	LOAD2	0.0000	0.0000	-6.114E-04	5.094E-05	0.0000	0.0000
596021	LOAD1	0.0000	0.0000	-6.114E-04	2.638E-05	0.0000	0.0000
596021	LOAD2	0.0000	0.0000	-6.114E-04	2.641E-05	0.0000	0.0000
596022	LOAD1	0.0000	0.0000	-6.114E-04	1.849E-06	0.0000	0.0000
596022	LOAD2	0.0000	0.0000	-6.114E-04	1.875E-06	0.0000	0.0000
596023	LOAD1	0.0000	0.0000	-6.114E-04	-2.268E-05	0.0000	0.0000
596023	LOAD2	0.0000	0.0000	-6.114E-04	-2.266E-05	0.0000	0.0000
596024	LOAD1	0.0000	0.0000	-6.114E-04	-4.722E-05	0.0000	0.0000
596024	LOAD2	0.0000	0.0000	-6.114E-04	-4.719E-05	0.0000	0.0000
596025	LOAD1	0.0000	0.0000	-6.114E-04	-7.175E-05	0.0000	0.0000
596025	LOAD2	0.0000	0.0000	-6.114E-04	-7.173E-05	0.0000	0.0000
596026	LOAD1	0.0000	0.0000	-6.114E-04	-9.628E-05	0.0000	0.0000
596026	LOAD2	0.0000	0.0000	-6.114E-04	-9.626E-05	0.0000	0.0000
596027	LOAD1	0.0000	0.0000	-6.114E-04	-1.208E-04	0.0000	0.0000
596027	LOAD2	0.0000	0.0000	-6.114E-04	-1.208E-04	0.0000	0.0000
596028	LOAD1	0.0000	0.0000	-6.114E-04	-1.453E-04	0.0000	0.0000

596028	LOAD2	0.0000	0.0000	-6.114E-04	-1.453E-04	0.0000	0.0000
596029	LOAD1	0.0000	0.0000	-6.114E-04	-1.699E-04	0.0000	0.0000
596029	LOAD2	0.0000	0.0000	-6.114E-04	-1.699E-04	0.0000	0.0000
596030	LOAD1	0.0000	0.0000	-6.114E-04	-1.944E-04	0.0000	0.0000
596030	LOAD2	0.0000	0.0000	-6.114E-04	-1.944E-04	0.0000	0.0000
596031	LOAD1	0.0000	0.0000	-6.114E-04	-2.189E-04	0.0000	0.0000
596031	LOAD2	0.0000	0.0000	-6.114E-04	-2.189E-04	0.0000	0.0000
596032	LOAD1	0.0000	0.0000	-6.114E-04	-2.435E-04	0.0000	0.0000
596032	LOAD2	0.0000	0.0000	-6.114E-04	-2.435E-04	0.0000	0.0000
596033	LOAD1	0.0000	0.0000	-6.114E-04	-2.680E-04	0.0000	0.0000
596033	LOAD2	0.0000	0.0000	-6.114E-04	-2.680E-04	0.0000	0.0000
596034	LOAD1	0.0000	0.0000	-6.114E-04	-2.925E-04	0.0000	0.0000
596034	LOAD2	0.0000	0.0000	-6.114E-04	-2.925E-04	0.0000	0.0000
596035	LOAD1	2.320E-06	0.0000	-6.114E-04	-3.171E-04	0.0000	0.0000
596035	LOAD2	1.856E-06	0.0000	-6.114E-04	-3.171E-04	0.0000	0.0000
596036	LOAD1	9.712E-06	0.0000	-6.115E-04	-3.416E-04	0.0000	0.0000
596036	LOAD2	7.769E-06	0.0000	-6.115E-04	-3.416E-04	0.0000	0.0000
596037	LOAD1	4.065E-05	0.0000	-6.110E-04	-3.661E-04	-3.871E-06	0.0000
596037	LOAD2	3.252E-05	0.0000	-6.110E-04	-3.661E-04	-3.871E-06	0.0000
596038	LOAD1	1.702E-04	1.655E-06	-6.127E-04	-3.907E-04	1.528E-05	2.426E-06
596038	LOAD2	1.361E-04	1.324E-06	-6.127E-04	-3.907E-04	1.528E-05	1.941E-06
596039	LOAD1	7.123E-04	-6.826E-06	-6.060E-04	-4.152E-04	-6.035E-05	-9.990E-06
596039	LOAD2	5.699E-04	-5.461E-06	-6.060E-04	-4.152E-04	-6.035E-05	-7.992E-06
596040	LOAD1	2.982E-03	3.002E-05	-6.323E-04	-4.397E-04	2.383E-04	4.127E-05
596040	LOAD2	2.385E-03	2.402E-05	-6.323E-04	-4.397E-04	2.383E-04	3.302E-05
596041	LOAD1	0.0125	-5.340E-04	-7.228E-04	-4.643E-04	-9.275E-04	-1.987E-04
596041	LOAD2	9.985E-03	-4.272E-04	-7.228E-04	-4.643E-04	-9.275E-04	-1.590E-04
596042	LOAD1	0.0247	-2.126E-03	-2.543E-04	-4.741E-04	6.540E-05	4.102E-04
596042	LOAD2	0.0198	-1.701E-03	-2.543E-04	-4.741E-04	6.540E-05	3.282E-04
596043	LOAD1	0.0345	5.357E-03	-4.077E-04	-4.790E-04	1.635E-05	1.746E-03
596043	LOAD2	0.0276	4.285E-03	-4.077E-04	-4.790E-04	1.635E-05	1.397E-03
596044	LOAD1	0.0476	0.0298	-8.024E-04	-4.839E-04	2.755E-04	3.635E-03
596044	LOAD2	0.0380	0.0238	-8.024E-04	-4.839E-04	2.755E-04	2.908E-03
606101	LOAD1	-0.0462	0.0304	-6.932E-04	-4.619E-04	-3.204E-04	-3.675E-03
606101	LOAD2	-0.0370	0.0243	-6.932E-04	-4.619E-04	-3.204E-04	-2.940E-03
606102	LOAD1	-0.0329	5.957E-03	3.389E-04	-4.470E-04	-1.968E-05	-1.756E-03
606102	LOAD2	-0.0263	4.766E-03	3.389E-04	-4.470E-04	-1.968E-05	-1.405E-03
606103	LOAD1	-0.0228	-1.867E-03	-8.523E-04	-4.321E-04	9.047E-04	-5.876E-04
606103	LOAD2	-0.0182	-1.493E-03	-8.523E-04	-4.321E-04	9.047E-04	-4.701E-04
606104	LOAD1	-5.444E-03	-1.139E-04	-6.334E-04	-3.576E-04	-2.205E-04	1.824E-04
606104	LOAD2	-4.355E-03	-9.113E-05	-6.334E-04	-3.576E-04	-2.205E-04	1.459E-04
606105	LOAD1	-1.301E-03	3.032E-05	-6.008E-04	-2.830E-04	0.0000	-4.446E-05
606105	LOAD2	-1.041E-03	2.425E-05	-6.008E-04	-2.830E-04	0.0000	-3.557E-05
606106	LOAD1	-3.118E-04	-7.421E-06	-6.337E-04	-2.085E-04	2.227E-04	1.073E-05

606106	LOAD2	-2.494E-04	-5.937E-06	-6.337E-04	-2.085E-04	2.227E-04	8.585E-06
606107	LOAD1	-7.870E-05	2.291E-06	-5.868E-04	-1.340E-04	-9.310E-04	-2.309E-06
606107	LOAD2	-6.296E-05	1.833E-06	-5.868E-04	-1.340E-04	-9.310E-04	-1.847E-06
606108	LOAD1	-2.904E-05	-1.042E-06	-9.328E-04	-7.906E-05	1.052E-03	0.0000
606108	LOAD2	-2.323E-05	0.0000	-9.328E-04	-7.906E-05	1.052E-03	0.0000
606109	LOAD1	-2.356E-05	2.237E-06	-0.0177	-6.416E-05	1.742E-03	0.0000
606109	LOAD2	-1.885E-05	1.790E-06	-0.0177	-6.416E-05	1.742E-03	0.0000

SAP2000 v7.40 File: BW THERMAL @ 25 & 20 DEGF & 0.5K Kip-in Units PAGE 2
12/21/07 9:19:20

Sargent & Lundy LLC

F R A M E E L E M E N T F O R C E S

FRAME	LOAD	LOC	P	V2	V3	T	M2	M3
1	LOAD1							
		0.00	-4.313E-01	-1.642E-02	3.121E-05	-7.868E-04	5.638E-04	-1.591E-01
		6.69	-4.313E-01	-1.264E-02	3.121E-05	-7.868E-04	3.550E-04	-6.190E-02
		13.38	-4.313E-01	-8.869E-03	3.121E-05	-7.868E-04	1.463E-04	1.006E-02
1	LOAD2							
		0.00	-3.450E-01	-1.642E-02	2.497E-05	-7.868E-04	4.511E-04	-1.591E-01
		6.69	-3.450E-01	-1.264E-02	2.497E-05	-7.868E-04	2.840E-04	-6.190E-02
		13.38	-3.450E-01	-8.869E-03	2.497E-05	-7.868E-04	1.170E-04	1.006E-02
2	LOAD1							
		0.00	-4.313E-01	-8.869E-03	3.121E-05	-7.868E-04	1.463E-04	1.006E-02
		16.94	-4.313E-01	6.864E-04	3.121E-05	-7.868E-04	-3.822E-04	7.935E-02
		33.87	-4.313E-01	1.024E-02	3.121E-05	-7.868E-04	-9.108E-04	-1.318E-02
2	LOAD2							
		0.00	-3.450E-01	-8.869E-03	2.497E-05	-7.868E-04	1.170E-04	1.006E-02
		16.94	-3.450E-01	6.864E-04	2.497E-05	-7.868E-04	-3.058E-04	7.935E-02
		33.87	-3.450E-01	1.024E-02	2.497E-05	-7.868E-04	-7.286E-04	-1.318E-02
3	LOAD1							
		0.00	-4.313E-01	1.024E-02	3.121E-05	-7.868E-04	-9.108E-04	-1.318E-02
		4.50	-4.313E-01	1.278E-02	3.121E-05	-7.868E-04	-1.051E-03	-6.498E-02
		9.00	-4.313E-01	1.532E-02	3.121E-05	-7.868E-04	-1.192E-03	-1.282E-01
3	LOAD2							
		0.00	-3.450E-01	1.024E-02	2.497E-05	-7.868E-04	-7.286E-04	-1.318E-02
		4.50	-3.450E-01	1.278E-02	2.497E-05	-7.868E-04	-8.409E-04	-6.498E-02
		9.00	-3.450E-01	1.532E-02	2.497E-05	-7.868E-04	-9.533E-04	-1.282E-01
4	LOAD1							
		0.00	-4.131E-01	-1.409E-02	-1.439E-04	-7.868E-04	-1.192E-03	-1.282E-01
		22.50	-4.131E-01	-1.397E-03	-1.439E-04	-7.868E-04	2.045E-03	4.605E-02
		45.00	-4.131E-01	1.130E-02	-1.439E-04	-7.868E-04	5.282E-03	-6.533E-02
4	LOAD2							
		0.00	-3.305E-01	-1.409E-02	-1.151E-04	-7.868E-04	-9.533E-04	-1.282E-01
		22.50	-3.305E-01	-1.397E-03	-1.151E-04	-7.868E-04	1.636E-03	4.605E-02
		45.00	-3.305E-01	1.130E-02	-1.151E-04	-7.868E-04	4.226E-03	-6.533E-02
5	LOAD1							
		0.00	-3.409E-01	-9.447E-03	1.106E-03	-7.868E-04	5.282E-03	-6.533E-02
		13.30	-3.409E-01	-1.943E-03	1.106E-03	-7.868E-04	-9.423E-03	1.041E-02
		26.60	-3.409E-01	5.562E-03	1.106E-03	-7.868E-04	-2.413E-02	-1.366E-02
5	LOAD2							
		0.00	-2.727E-01	-9.447E-03	8.845E-04	-7.868E-04	4.226E-03	-6.533E-02
		13.30	-2.727E-01	-1.943E-03	8.845E-04	-7.868E-04	-7.538E-03	1.041E-02
		26.60	-2.727E-01	5.562E-03	8.845E-04	-7.868E-04	-1.930E-02	-1.366E-02

6	LOAD1							
		0.00	-2.488E-01	-3.383E-03	5.722E-03	-7.868E-04	-2.413E-02	-1.366E-02
		4.50	-2.488E-01	-8.438E-04	5.722E-03	-7.868E-04	-4.988E-02	-4.145E-03
		9.00	-2.488E-01	1.695E-03	5.722E-03	-7.868E-04	-7.563E-02	-6.061E-03
6	LOAD2							
		0.00	-1.991E-01	-3.383E-03	4.578E-03	-7.868E-04	-1.930E-02	-1.366E-02
		4.50	-1.991E-01	-8.438E-04	4.578E-03	-7.868E-04	-3.990E-02	-4.145E-03
		9.00	-1.991E-01	1.695E-03	4.578E-03	-7.868E-04	-6.050E-02	-6.061E-03
7	LOAD1							
		0.00	-1.836E-01	-5.830E-04	-2.722E-04	-7.868E-04	-7.563E-02	-6.061E-03
		4.50	-1.836E-01	1.956E-03	-2.722E-04	-7.868E-04	-7.440E-02	-9.151E-03
		9.00	-1.836E-01	4.495E-03	-2.722E-04	-7.868E-04	-7.318E-02	-2.367E-02
7	LOAD2							
		0.00	-1.469E-01	-5.830E-04	-2.177E-04	-7.868E-04	-6.050E-02	-6.061E-03
		4.50	-1.469E-01	1.956E-03	-2.177E-04	-7.868E-04	-5.952E-02	-9.150E-03
		9.00	-1.469E-01	4.495E-03	-2.177E-04	-7.868E-04	-5.854E-02	-2.367E-02
8	LOAD1							
		0.00	-4.898E-02	-5.171E-03	-4.861E-02	-7.868E-04	-7.318E-02	-2.367E-02
		4.50	-4.898E-02	-2.632E-03	-4.861E-02	-7.868E-04	1.456E-01	-6.110E-03
		9.00	-4.898E-02	-9.265E-05	-4.861E-02	-7.868E-04	3.644E-01	1.962E-05
8	LOAD2							
		0.00	-3.919E-02	-5.171E-03	-3.889E-02	-7.868E-04	-5.854E-02	-2.367E-02
		4.50	-3.919E-02	-2.632E-03	-3.889E-02	-7.868E-04	1.165E-01	-6.110E-03
		9.00	-3.919E-02	-9.269E-05	-3.889E-02	-7.868E-04	2.915E-01	2.025E-05
9	LOAD1							
		0.00	-4.861E-02	-9.265E-05	4.898E-02	1.962E-05	3.644E-01	7.868E-04
		4.50	-4.861E-02	2.446E-03	4.898E-02	1.962E-05	1.439E-01	-4.509E-03
		9.00	-4.861E-02	4.985E-03	4.898E-02	1.962E-05	-7.650E-02	-2.123E-02
9	LOAD2							
		0.00	-3.889E-02	-9.269E-05	3.919E-02	2.025E-05	2.915E-01	7.868E-04
		4.50	-3.889E-02	2.446E-03	3.919E-02	2.025E-05	1.151E-01	-4.509E-03
		9.00	-3.889E-02	4.985E-03	3.919E-02	2.025E-05	-6.120E-02	-2.123E-02
10	LOAD1							
		0.00	-1.798E-01	-3.741E-03	-9.735E-05	1.962E-05	-7.650E-02	-2.123E-02
		4.50	-1.798E-01	-1.202E-03	-9.735E-05	1.962E-05	-7.606E-02	-1.011E-02
		9.00	-1.798E-01	1.337E-03	-9.735E-05	1.962E-05	-7.563E-02	-1.041E-02
10	LOAD2							
		0.00	-1.438E-01	-3.741E-03	-7.788E-05	2.025E-05	-6.120E-02	-2.123E-02
		4.50	-1.438E-01	-1.202E-03	-7.788E-05	2.025E-05	-6.085E-02	-1.011E-02
		9.00	-1.438E-01	1.337E-03	-7.788E-05	2.025E-05	-6.050E-02	-1.041E-02
11	LOAD1							
		0.00	-2.423E-01	4.170E-03	-6.519E-03	1.962E-05	-7.563E-02	-1.041E-02
		4.50	-2.423E-01	6.709E-03	-6.519E-03	1.962E-05	-4.629E-02	-3.489E-02
		9.00	-2.423E-01	9.248E-03	-6.519E-03	1.962E-05	-1.696E-02	-7.080E-02
11	LOAD2							
		0.00	-1.938E-01	4.170E-03	-5.215E-03	2.025E-05	-6.050E-02	-1.041E-02
		4.50	-1.938E-01	6.709E-03	-5.215E-03	2.025E-05	-3.703E-02	-3.489E-02
		9.00	-1.938E-01	9.248E-03	-5.215E-03	2.025E-05	-1.357E-02	-7.080E-02
12	LOAD1							
		0.00	-3.720E-01	-1.201E-02	-4.824E-04	1.962E-05	-1.696E-02	-7.080E-02
		22.50	-3.720E-01	6.822E-04	-4.824E-04	1.962E-05	-6.105E-03	5.667E-02
		45.00	-3.720E-01	1.338E-02	-4.824E-04	1.962E-05	4.750E-03	-1.015E-01
12	LOAD2							
		0.00	-2.976E-01	-1.201E-02	-3.859E-04	2.025E-05	-1.357E-02	-7.080E-02
		22.50	-2.976E-01	6.822E-04	-3.859E-04	2.025E-05	-4.884E-03	5.667E-02
		45.00	-2.976E-01	1.338E-02	-3.859E-04	2.025E-05	3.800E-03	-1.015E-01
13	LOAD1							
		0.00	-4.236E-01	-1.287E-02	1.309E-04	1.962E-05	4.750E-03	-1.015E-01

		22.50	-4.236E-01	-1.759E-04	1.309E-04	1.962E-05	1.804E-03	4.528E-02
		45.00	-4.236E-01	1.252E-02	1.309E-04	1.962E-05	-1.141E-03	-9.358E-02
13	LOAD2							
		0.00	-3.388E-01	-1.287E-02	1.047E-04	2.025E-05	3.800E-03	-1.015E-01
		22.50	-3.388E-01	-1.759E-04	1.047E-04	2.025E-05	1.444E-03	4.528E-02
		45.00	-3.388E-01	1.252E-02	1.047E-04	2.025E-05	-9.126E-04	-9.358E-02
14	LOAD1							
		0.00	-4.357E-01	-1.265E-02	-3.008E-05	1.962E-05	-1.141E-03	-9.358E-02
		22.50	-4.357E-01	4.891E-05	-3.008E-05	1.962E-05	-4.639E-04	4.814E-02
		45.00	-4.357E-01	1.274E-02	-3.008E-05	1.962E-05	2.129E-04	-9.578E-02
14	LOAD2							
		0.00	-3.485E-01	-1.265E-02	-2.407E-05	2.025E-05	-9.126E-04	-9.358E-02
		22.50	-3.485E-01	4.891E-05	-2.407E-05	2.025E-05	-3.712E-04	4.814E-02
		45.00	-3.485E-01	1.274E-02	-2.407E-05	2.025E-05	1.703E-04	-9.578E-02
15	LOAD1							
		0.00	-4.377E-01	-1.272E-02	0.00	1.962E-05	2.129E-04	-9.578E-02
		22.50	-4.377E-01	-2.963E-05	0.00	1.962E-05	2.127E-04	4.770E-02
		45.00	-4.377E-01	1.267E-02	0.00	1.962E-05	2.124E-04	-9.445E-02
15	LOAD2							
		0.00	-3.502E-01	-1.272E-02	0.00	2.025E-05	1.703E-04	-9.578E-02
		22.50	-3.502E-01	-2.963E-05	0.00	2.025E-05	1.701E-04	4.770E-02
		45.00	-3.502E-01	1.267E-02	0.00	2.025E-05	1.699E-04	-9.445E-02
16	LOAD1							
		0.00	-4.346E-01	-1.262E-02	3.004E-05	1.962E-05	2.124E-04	-9.445E-02
		22.50	-4.346E-01	7.560E-05	3.004E-05	1.962E-05	-4.635E-04	4.667E-02
		45.00	-4.346E-01	1.277E-02	3.004E-05	1.962E-05	-1.139E-03	-9.785E-02
16	LOAD2							
		0.00	-3.477E-01	-1.262E-02	2.403E-05	2.025E-05	1.699E-04	-9.445E-02
		22.50	-3.477E-01	7.560E-05	2.403E-05	2.025E-05	-3.708E-04	4.667E-02
		45.00	-3.477E-01	1.277E-02	2.403E-05	2.025E-05	-9.115E-04	-9.785E-02
17	LOAD1							
		0.00	-4.189E-01	-1.298E-02	-1.319E-04	1.962E-05	-1.139E-03	-9.785E-02
		22.50	-4.189E-01	-2.865E-04	-1.319E-04	1.962E-05	1.828E-03	5.142E-02
		45.00	-4.189E-01	1.241E-02	-1.319E-04	1.962E-05	4.795E-03	-8.496E-02
17	LOAD2							
		0.00	-3.352E-01	-1.298E-02	-1.055E-04	2.025E-05	-9.115E-04	-9.785E-02
		22.50	-3.352E-01	-2.865E-04	-1.055E-04	2.025E-05	1.462E-03	5.142E-02
		45.00	-3.352E-01	1.241E-02	-1.055E-04	2.025E-05	3.836E-03	-8.496E-02
18	LOAD1							
		0.00	-3.589E-01	-1.157E-02	6.481E-04	1.962E-05	4.795E-03	-8.496E-02
		18.24	-3.589E-01	-1.278E-03	6.481E-04	1.962E-05	-7.027E-03	3.221E-02
		36.48	-3.589E-01	9.014E-03	6.481E-04	1.962E-05	-1.885E-02	-3.835E-02
18	LOAD2							
		0.00	-2.872E-01	-1.157E-02	5.185E-04	2.025E-05	3.836E-03	-8.496E-02
		18.24	-2.872E-01	-1.278E-03	5.185E-04	2.025E-05	-5.621E-03	3.221E-02
		36.48	-2.872E-01	9.014E-03	5.185E-04	2.025E-05	-1.508E-02	-3.835E-02
19	LOAD1							
		0.00	-2.451E-01	-5.915E-03	5.609E-03	1.962E-05	-1.885E-02	-3.835E-02
		4.50	-2.451E-01	-3.376E-03	5.609E-03	1.962E-05	-4.409E-02	-1.744E-02
		9.00	-2.451E-01	-8.373E-04	5.609E-03	1.962E-05	-6.933E-02	-7.961E-03
19	LOAD2							
		0.00	-1.961E-01	-5.916E-03	4.487E-03	2.025E-05	-1.508E-02	-3.835E-02
		4.50	-1.961E-01	-3.377E-03	4.487E-03	2.025E-05	-3.527E-02	-1.744E-02
		9.00	-1.961E-01	-8.377E-04	4.487E-03	2.025E-05	-5.546E-02	-7.959E-03
20	LOAD1							
		0.00	-1.810E-01	-1.026E-03	-4.721E-04	1.962E-05	-6.933E-02	-7.961E-03
		4.50	-1.810E-01	1.513E-03	-4.721E-04	1.962E-05	-6.721E-02	-9.057E-03
		9.00	-1.810E-01	4.052E-03	-4.721E-04	1.962E-05	-6.508E-02	-2.158E-02
20	LOAD2							

	0.00	-1.448E-01	-1.029E-03	-3.780E-04	2.025E-05	-5.546E-02	-7.959E-03
	4.50	-1.448E-01	1.510E-03	-3.780E-04	2.025E-05	-5.376E-02	-9.039E-03
	9.00	-1.448E-01	4.049E-03	-3.780E-04	2.025E-05	-5.206E-02	-2.155E-02
21 LOAD1							
	0.00	-4.764E-02	-5.063E-03	-4.620E-02	1.962E-05	-6.508E-02	-2.158E-02
	4.50	-4.764E-02	-2.524E-03	-4.620E-02	1.962E-05	1.428E-01	-4.507E-03
	9.00	-4.764E-02	1.489E-05	-4.620E-02	1.962E-05	3.507E-01	1.139E-03
21 LOAD2							
	0.00	-3.811E-02	-5.064E-03	-3.696E-02	2.025E-05	-5.206E-02	-2.155E-02
	4.50	-3.811E-02	-2.525E-03	-3.696E-02	2.025E-05	1.143E-01	-4.469E-03
	9.00	-3.811E-02	1.396E-05	-3.696E-02	2.025E-05	2.806E-01	1.181E-03
22 LOAD1							
	0.00	-4.620E-02	1.489E-05	4.764E-02	1.139E-03	3.507E-01	-1.962E-05
	4.50	-4.620E-02	2.554E-03	4.764E-02	1.139E-03	1.364E-01	-5.799E-03
	9.00	-4.620E-02	5.093E-03	4.764E-02	1.139E-03	-7.801E-02	-2.300E-02
22 LOAD2							
	0.00	-3.696E-02	1.396E-05	3.811E-02	1.181E-03	2.806E-01	-2.025E-05
	4.50	-3.696E-02	2.553E-03	3.811E-02	1.181E-03	1.091E-01	-5.796E-03
	9.00	-3.696E-02	5.092E-03	3.811E-02	1.181E-03	-6.241E-02	-2.300E-02
23 LOAD1							
	0.00	-1.631E-01	-4.466E-03	5.613E-05	1.139E-03	-7.801E-02	-2.300E-02
	4.50	-1.631E-01	-1.927E-03	5.613E-05	1.139E-03	-7.826E-02	-8.620E-03
	9.00	-1.631E-01	6.119E-04	5.613E-05	1.139E-03	-7.851E-02	-5.661E-03
23 LOAD2							
	0.00	-1.305E-01	-4.470E-03	4.425E-05	1.181E-03	-6.241E-02	-2.300E-02
	4.50	-1.305E-01	-1.931E-03	4.425E-05	1.181E-03	-6.261E-02	-8.594E-03
	9.00	-1.305E-01	6.078E-04	4.425E-05	1.181E-03	-6.281E-02	-5.616E-03
24 LOAD1							
	0.00	-2.145E-01	-2.512E-03	-5.295E-03	1.139E-03	-7.851E-02	-5.661E-03
	4.50	-2.145E-01	2.714E-05	-5.295E-03	1.139E-03	-5.469E-02	-6.988E-05
	9.00	-2.145E-01	2.566E-03	-5.295E-03	1.139E-03	-3.086E-02	-5.905E-03
24 LOAD2							
	0.00	-1.716E-01	-2.570E-03	-4.236E-03	1.181E-03	-6.281E-02	-5.616E-03
	4.50	-1.716E-01	-3.124E-05	-4.236E-03	1.181E-03	-4.374E-02	2.371E-04
	9.00	-1.716E-01	2.508E-03	-4.236E-03	1.181E-03	-2.468E-02	-5.335E-03
25 LOAD1							
	0.00	-2.439E-01	-2.309E-03	-2.957E-03	1.139E-03	-3.086E-02	-5.905E-03
	4.50	-2.439E-01	2.296E-04	-2.957E-03	1.139E-03	-1.755E-02	-1.225E-03
	9.00	-2.439E-01	2.769E-03	-2.957E-03	1.139E-03	-4.248E-03	-7.971E-03
25 LOAD2							
	0.00	-1.951E-01	-2.349E-03	-2.364E-03	1.181E-03	-2.468E-02	-5.335E-03
	4.50	-1.951E-01	1.901E-04	-2.364E-03	1.181E-03	-1.405E-02	-4.776E-04
	9.00	-1.951E-01	2.729E-03	-2.364E-03	1.181E-03	-3.408E-03	-7.046E-03
26 LOAD1							
	0.00	-2.543E-01	-7.964E-03	-7.214E-04	1.139E-03	-4.248E-03	-7.971E-03
	4.50	-2.543E-01	-5.425E-03	-7.214E-04	1.139E-03	-1.001E-03	2.216E-02
	9.00	-2.543E-01	-2.886E-03	-7.214E-04	1.139E-03	2.245E-03	4.086E-02
26 LOAD2							
	0.00	-2.034E-01	-6.853E-03	-5.707E-04	1.181E-03	-3.408E-03	-7.046E-03
	4.50	-2.034E-01	-4.314E-03	-5.707E-04	1.181E-03	-8.399E-04	1.808E-02
	9.00	-2.034E-01	-1.775E-03	-5.707E-04	1.181E-03	1.728E-03	3.178E-02
27 LOAD1							
	0.00	-2.466E-01	-2.293E-02	1.471E-04	1.139E-03	2.245E-03	4.086E-02
	4.50	-2.466E-01	-2.039E-02	1.471E-04	1.139E-03	1.583E-03	1.383E-01
	9.00	-2.466E-01	-1.786E-02	1.471E-04	1.139E-03	9.210E-04	2.244E-01
27 LOAD2							
	0.00	-1.972E-01	-1.869E-02	1.289E-04	1.181E-03	1.728E-03	3.178E-02
	4.50	-1.972E-01	-1.615E-02	1.289E-04	1.181E-03	1.148E-03	1.102E-01
	9.00	-1.972E-01	-1.361E-02	1.289E-04	1.181E-03	5.680E-04	1.771E-01

28	LOAD1							
		0.00	-2.071E-01	8.166E-02	9.260E-05	1.139E-03	9.210E-04	2.244E-01
		4.50	-2.071E-01	8.420E-02	9.260E-05	1.139E-03	5.043E-04	-1.488E-01
		9.00	-2.071E-01	8.674E-02	9.260E-05	1.139E-03	8.760E-05	-5.334E-01
28	LOAD2							
		0.00	-1.656E-01	6.431E-02	6.654E-05	1.181E-03	5.680E-04	1.771E-01
		4.50	-1.656E-01	6.685E-02	6.654E-05	1.181E-03	2.686E-04	-1.180E-01
		9.00	-1.656E-01	6.939E-02	6.654E-05	1.181E-03	-3.082E-05	-4.245E-01
29	LOAD1							
		0.00	-2.078E-01	-8.513E-02	9.260E-05	8.673E-04	-7.434E-04	-5.334E-01
		4.50	-2.096E-01	-8.334E-02	9.260E-05	8.673E-04	-1.160E-03	-1.546E-01
		8.99	-2.114E-01	-8.154E-02	9.260E-05	8.673E-04	-1.576E-03	2.162E-01
29	LOAD2							
		0.00	-1.662E-01	-6.804E-02	6.654E-05	8.130E-04	-8.566E-04	-4.245E-01
		4.50	-1.680E-01	-6.624E-02	6.654E-05	8.130E-04	-1.156E-03	-1.226E-01
		8.99	-1.698E-01	-6.445E-02	6.654E-05	8.130E-04	-1.455E-03	1.713E-01
30	LOAD1							
		0.00	-2.474E-01	2.782E-02	-1.350E-04	8.661E-04	-1.577E-03	2.162E-01
		4.50	-2.492E-01	2.962E-02	-1.350E-04	8.661E-04	-9.694E-04	8.689E-02
		9.00	-2.510E-01	3.141E-02	-1.350E-04	8.661E-04	-3.617E-04	-5.045E-02
30	LOAD2							
		0.00	-1.976E-01	2.181E-02	-1.255E-04	8.119E-04	-1.456E-03	1.713E-01
		4.50	-1.994E-01	2.361E-02	-1.255E-04	8.119E-04	-8.907E-04	6.905E-02
		9.00	-2.012E-01	2.540E-02	-1.255E-04	8.119E-04	-3.256E-04	-4.123E-02
31	LOAD1							
		0.00	-2.565E-01	-3.902E-03	-8.969E-05	8.666E-04	-3.604E-04	-5.045E-02
		4.50	-2.583E-01	-2.105E-03	-8.969E-05	8.666E-04	4.329E-05	-3.693E-02
		9.00	-2.601E-01	-3.078E-04	-8.969E-05	8.666E-04	4.470E-04	-3.150E-02
31	LOAD2							
		0.00	-2.050E-01	-3.566E-03	-7.987E-05	8.124E-04	-3.244E-04	-4.123E-02
		4.50	-2.068E-01	-1.769E-03	-7.987E-05	8.124E-04	3.512E-05	-2.922E-02
		9.00	-2.086E-01	2.808E-05	-7.987E-05	8.124E-04	3.946E-04	-2.531E-02
32	LOAD1							
		0.00	-2.503E-01	-1.681E-01	2.802E-05	8.670E-04	4.463E-04	-3.150E-02
		1.35	-2.509E-01	-1.675E-01	2.802E-05	8.670E-04	4.085E-04	1.952E-01
		2.70	-2.514E-01	-1.670E-01	2.802E-05	8.670E-04	3.706E-04	4.211E-01
32	LOAD2							
		0.00	-2.003E-01	-1.352E-01	2.667E-05	8.127E-04	3.940E-04	-2.531E-02
		1.35	-2.008E-01	-1.346E-01	2.667E-05	8.127E-04	3.580E-04	1.569E-01
		2.70	-2.014E-01	-1.341E-01	2.667E-05	8.127E-04	3.219E-04	3.384E-01
33	LOAD1							
		0.00	-2.959E-01	5.969E-02	2.802E-05	3.510E-04	8.751E-04	4.211E-01
		4.50	-2.959E-01	6.222E-02	2.802E-05	3.510E-04	7.490E-04	1.468E-01
		9.00	-2.959E-01	6.476E-02	2.802E-05	3.510E-04	6.229E-04	-1.389E-01
33	LOAD2							
		0.00	-2.372E-01	4.756E-02	2.667E-05	3.470E-04	8.023E-04	3.384E-01
		4.50	-2.372E-01	5.010E-02	2.667E-05	3.470E-04	6.823E-04	1.186E-01
		9.00	-2.372E-01	5.264E-02	2.667E-05	3.470E-04	5.623E-04	-1.125E-01
34	LOAD1							
		0.00	-3.441E-01	-1.367E-02	4.760E-05	3.510E-04	6.229E-04	-1.389E-01
		4.50	-3.441E-01	-1.113E-02	4.760E-05	3.510E-04	4.088E-04	-8.313E-02
		9.00	-3.441E-01	-8.593E-03	4.760E-05	3.510E-04	1.946E-04	-3.875E-02
34	LOAD2							
		0.00	-2.757E-01	-1.140E-02	4.312E-05	3.470E-04	5.623E-04	-1.125E-01
		4.50	-2.757E-01	-8.863E-03	4.312E-05	3.470E-04	3.683E-04	-6.695E-02
		9.00	-2.757E-01	-6.324E-03	4.312E-05	3.470E-04	1.743E-04	-3.278E-02
35	LOAD1							
		0.00	-3.671E-01	7.928E-04	2.489E-05	3.510E-04	1.946E-04	-3.875E-02

	4.50	-3.671E-01	3.332E-03	2.489E-05	3.510E-04	8.259E-05	-4.803E-02
	9.00	-3.671E-01	5.871E-03	2.489E-05	3.510E-04	-2.940E-05	-6.874E-02
35 LOAD2							
	0.00	-2.940E-01	1.510E-03	2.238E-05	3.470E-04	1.743E-04	-3.278E-02
	4.50	-2.940E-01	4.049E-03	2.238E-05	3.470E-04	7.359E-05	-4.528E-02
	9.00	-2.940E-01	6.588E-03	2.238E-05	3.470E-04	-2.711E-05	-6.922E-02
36 LOAD1							
	0.00	-4.149E-01	-1.196E-02	0.00	3.510E-04	-2.940E-05	-6.874E-02
	22.50	-4.149E-01	7.384E-04	0.00	3.510E-04	-1.258E-05	5.747E-02
	45.00	-4.149E-01	1.343E-02	0.00	3.510E-04	4.238E-06	-1.020E-01
36 LOAD2							
	0.00	-3.320E-01	-1.197E-02	0.00	3.470E-04	-2.711E-05	-6.922E-02
	22.50	-3.320E-01	7.252E-04	0.00	3.470E-04	-1.152E-05	5.729E-02
	45.00	-3.320E-01	1.342E-02	0.00	3.470E-04	4.071E-06	-1.019E-01
37 LOAD1							
	0.00	-4.338E-01	-1.288E-02	0.00	3.510E-04	4.238E-06	-1.020E-01
	22.50	-4.338E-01	-1.875E-04	0.00	3.510E-04	3.533E-06	4.507E-02
	45.00	-4.338E-01	1.251E-02	0.00	3.510E-04	2.829E-06	-9.353E-02
37 LOAD2							
	0.00	-3.471E-01	-1.288E-02	0.00	3.470E-04	4.071E-06	-1.019E-01
	22.50	-3.471E-01	-1.843E-04	0.00	3.470E-04	3.085E-06	4.512E-02
	45.00	-3.471E-01	1.251E-02	0.00	3.470E-04	2.099E-06	-9.356E-02
38 LOAD1							
	0.00	-4.383E-01	-1.265E-02	0.00	3.510E-04	2.829E-06	-9.353E-02
	22.50	-4.383E-01	4.487E-05	0.00	3.510E-04	-6.854E-06	4.828E-02
	45.00	-4.383E-01	1.274E-02	0.00	3.510E-04	-1.654E-05	-9.555E-02
38 LOAD2							
	0.00	-3.506E-01	-1.265E-02	0.00	3.470E-04	2.099E-06	-9.356E-02
	22.50	-3.506E-01	4.406E-05	0.00	3.470E-04	-5.545E-06	4.827E-02
	45.00	-3.506E-01	1.274E-02	0.00	3.470E-04	-1.319E-05	-9.554E-02
39 LOAD1							
	0.00	-4.390E-01	-1.270E-02	-1.907E-06	3.510E-04	-1.654E-05	-9.555E-02
	22.50	-4.390E-01	0.00	-1.907E-06	3.510E-04	2.638E-05	4.730E-02
	45.00	-4.390E-01	1.269E-02	-1.907E-06	3.510E-04	6.929E-05	-9.550E-02
39 LOAD2							
	0.00	-3.512E-01	-1.270E-02	-1.525E-06	3.470E-04	-1.319E-05	-9.554E-02
	22.50	-3.512E-01	0.00	-1.525E-06	3.470E-04	2.112E-05	4.730E-02
	45.00	-3.512E-01	1.269E-02	-1.525E-06	3.470E-04	5.542E-05	-9.550E-02
40 LOAD1							
	0.00	-4.378E-01	-1.274E-02	7.887E-06	3.510E-04	6.929E-05	-9.550E-02
	22.50	-4.378E-01	-4.067E-05	7.887E-06	3.510E-04	-1.082E-04	4.823E-02
	45.00	-4.378E-01	1.265E-02	7.887E-06	3.510E-04	-2.856E-04	-9.367E-02
40 LOAD2							
	0.00	-3.503E-01	-1.274E-02	6.309E-06	3.470E-04	5.542E-05	-9.550E-02
	22.50	-3.503E-01	-4.073E-05	6.309E-06	3.470E-04	-8.654E-05	4.823E-02
	45.00	-3.503E-01	1.265E-02	6.309E-06	3.470E-04	-2.285E-04	-9.367E-02
41 LOAD1							
	0.00	-4.318E-01	-1.252E-02	-3.252E-05	3.510E-04	-2.856E-04	-9.367E-02
	22.50	-4.318E-01	1.719E-04	-3.252E-05	3.510E-04	4.461E-04	4.528E-02
	45.00	-4.318E-01	1.287E-02	-3.252E-05	3.510E-04	1.178E-03	-1.014E-01
41 LOAD2							
	0.00	-3.454E-01	-1.252E-02	-2.602E-05	3.470E-04	-2.285E-04	-9.367E-02
	22.50	-3.454E-01	1.719E-04	-2.602E-05	3.470E-04	3.569E-04	4.528E-02
	45.00	-3.454E-01	1.287E-02	-2.602E-05	3.470E-04	9.423E-04	-1.014E-01
42 LOAD1							
	0.00	-4.062E-01	-1.337E-02	1.413E-04	3.510E-04	1.178E-03	-1.014E-01
	22.50	-4.062E-01	-6.776E-04	1.413E-04	3.510E-04	-2.001E-03	5.666E-02
	45.00	-4.062E-01	1.202E-02	1.413E-04	3.510E-04	-5.180E-03	-7.092E-02
42 LOAD2							

	0.00	-3.249E-01	-1.337E-02	1.130E-04	3.470E-04	9.423E-04	-1.014E-01
	22.50	-3.249E-01	-6.776E-04	1.130E-04	3.470E-04	-1.601E-03	5.666E-02
	45.00	-3.249E-01	1.202E-02	1.130E-04	3.470E-04	-4.144E-03	-7.092E-02
43 LOAD1							
	0.00	-3.276E-01	-9.199E-03	-1.547E-03	3.510E-04	-5.180E-03	-7.092E-02
	10.50	-3.276E-01	-3.274E-03	-1.547E-03	3.510E-04	1.106E-02	-5.432E-03
	21.00	-3.276E-01	2.650E-03	-1.547E-03	3.510E-04	2.730E-02	-2.154E-03
43 LOAD2							
	0.00	-2.621E-01	-9.199E-03	-1.237E-03	3.470E-04	-4.144E-03	-7.092E-02
	10.50	-2.621E-01	-3.274E-03	-1.237E-03	3.470E-04	8.847E-03	-5.432E-03
	21.00	-2.621E-01	2.650E-03	-1.237E-03	3.470E-04	2.184E-02	-2.154E-03
44 LOAD1							
	0.00	-2.495E-01	-2.256E-03	-5.462E-03	3.510E-04	2.730E-02	-2.154E-03
	4.50	-2.495E-01	2.832E-04	-5.462E-03	3.510E-04	5.188E-02	2.284E-03
	9.00	-2.495E-01	2.822E-03	-5.462E-03	3.510E-04	7.646E-02	-4.703E-03
44 LOAD2							
	0.00	-1.996E-01	-2.256E-03	-4.370E-03	3.470E-04	2.184E-02	-2.154E-03
	4.50	-1.996E-01	2.832E-04	-4.370E-03	3.470E-04	4.150E-02	2.284E-03
	9.00	-1.996E-01	2.822E-03	-4.370E-03	3.470E-04	6.116E-02	-4.703E-03
45 LOAD1							
	0.00	-1.840E-01	-3.917E-04	3.874E-04	3.510E-04	7.646E-02	-4.703E-03
	4.50	-1.840E-01	2.147E-03	3.874E-04	3.510E-04	7.471E-02	-8.653E-03
	9.00	-1.840E-01	4.686E-03	3.874E-04	3.510E-04	7.297E-02	-2.403E-02
45 LOAD2							
	0.00	-1.472E-01	-3.916E-04	3.099E-04	3.470E-04	6.116E-02	-4.703E-03
	4.50	-1.472E-01	2.147E-03	3.099E-04	3.470E-04	5.977E-02	-8.654E-03
	9.00	-1.472E-01	4.687E-03	3.099E-04	3.470E-04	5.838E-02	-2.403E-02
46 LOAD1							
	0.00	-4.906E-02	-5.224E-03	4.865E-02	3.510E-04	7.297E-02	-2.403E-02
	4.50	-4.906E-02	-2.685E-03	4.865E-02	3.510E-04	-1.460E-01	-6.233E-03
	9.00	-4.906E-02	-1.460E-04	4.865E-02	3.510E-04	-3.649E-01	1.372E-04
46 LOAD2							
	0.00	-3.925E-02	-5.224E-03	3.892E-02	3.470E-04	5.838E-02	-2.403E-02
	4.50	-3.925E-02	-2.685E-03	3.892E-02	3.470E-04	-1.168E-01	-6.234E-03
	9.00	-3.925E-02	-1.462E-04	3.892E-02	3.470E-04	-2.919E-01	1.372E-04
47 LOAD1							
	0.00	-4.865E-02	-1.460E-04	-4.906E-02	-1.372E-04	-3.649E-01	3.510E-04
	4.50	-4.865E-02	2.393E-03	-4.906E-02	-1.372E-04	-1.441E-01	-4.705E-03
	9.00	-4.865E-02	4.932E-03	-4.906E-02	-1.372E-04	7.664E-02	-2.119E-02
47 LOAD2							
	0.00	-3.892E-02	-1.462E-04	-3.925E-02	-1.372E-04	-2.919E-01	3.470E-04
	4.50	-3.892E-02	2.393E-03	-3.925E-02	-1.372E-04	-1.153E-01	-4.708E-03
	9.00	-3.892E-02	4.932E-03	-3.925E-02	-1.372E-04	6.132E-02	-2.119E-02
48 LOAD1							
	0.00	-1.798E-01	-3.738E-03	9.931E-05	-1.372E-04	7.664E-02	-2.119E-02
	4.50	-1.798E-01	-1.199E-03	9.931E-05	-1.372E-04	7.620E-02	-1.008E-02
	9.00	-1.798E-01	1.340E-03	9.931E-05	-1.372E-04	7.575E-02	-1.040E-02
48 LOAD2							
	0.00	-1.439E-01	-3.738E-03	7.945E-05	-1.372E-04	6.132E-02	-2.119E-02
	4.50	-1.439E-01	-1.199E-03	7.945E-05	-1.372E-04	6.096E-02	-1.008E-02
	9.00	-1.439E-01	1.340E-03	7.945E-05	-1.372E-04	6.060E-02	-1.040E-02
49 LOAD1							
	0.00	-2.423E-01	4.173E-03	6.529E-03	-1.372E-04	7.575E-02	-1.040E-02
	4.50	-2.423E-01	6.712E-03	6.529E-03	-1.372E-04	4.637E-02	-3.489E-02
	9.00	-2.423E-01	9.251E-03	6.529E-03	-1.372E-04	1.698E-02	-7.080E-02
49 LOAD2							
	0.00	-1.939E-01	4.173E-03	5.224E-03	-1.372E-04	6.060E-02	-1.040E-02
	4.50	-1.939E-01	6.712E-03	5.224E-03	-1.372E-04	3.709E-02	-3.489E-02
	9.00	-1.939E-01	9.251E-03	5.224E-03	-1.372E-04	1.359E-02	-7.080E-02

50	LOAD1							
		0.00	-3.720E-01	-1.201E-02	4.832E-04	-1.372E-04	1.698E-02	-7.080E-02
		22.50	-3.720E-01	6.818E-04	4.832E-04	-1.372E-04	6.112E-03	5.668E-02
		45.00	-3.720E-01	1.338E-02	4.832E-04	-1.372E-04	-4.761E-03	-1.015E-01
50	LOAD2							
		0.00	-2.976E-01	-1.201E-02	3.866E-04	-1.372E-04	1.359E-02	-7.080E-02
		22.50	-2.976E-01	6.818E-04	3.866E-04	-1.372E-04	4.890E-03	5.668E-02
		45.00	-2.976E-01	1.338E-02	3.866E-04	-1.372E-04	-3.809E-03	-1.015E-01
51	LOAD1							
		0.00	-4.236E-01	-1.287E-02	-1.316E-04	-1.372E-04	-4.761E-03	-1.015E-01
		22.50	-4.236E-01	-1.747E-04	-1.316E-04	-1.372E-04	-1.801E-03	4.527E-02
		45.00	-4.236E-01	1.252E-02	-1.316E-04	-1.372E-04	1.159E-03	-9.363E-02
51	LOAD2							
		0.00	-3.389E-01	-1.287E-02	-1.052E-04	-1.372E-04	-3.809E-03	-1.015E-01
		22.50	-3.389E-01	-1.747E-04	-1.052E-04	-1.372E-04	-1.441E-03	4.527E-02
		45.00	-3.389E-01	1.252E-02	-1.052E-04	-1.372E-04	9.272E-04	-9.363E-02
52	LOAD1							
		0.00	-4.360E-01	-1.265E-02	3.201E-05	-1.372E-04	1.159E-03	-9.363E-02
		22.50	-4.360E-01	4.424E-05	3.201E-05	-1.372E-04	4.388E-04	4.820E-02
		45.00	-4.360E-01	1.274E-02	3.201E-05	-1.372E-04	-2.815E-04	-9.562E-02
52	LOAD2							
		0.00	-3.488E-01	-1.265E-02	2.561E-05	-1.372E-04	9.272E-04	-9.363E-02
		22.50	-3.488E-01	4.424E-05	2.561E-05	-1.372E-04	3.510E-04	4.820E-02
		45.00	-3.488E-01	1.274E-02	2.561E-05	-1.372E-04	-2.252E-04	-9.562E-02
53	LOAD1							
		0.00	-4.389E-01	-1.271E-02	-7.774E-06	-1.372E-04	-2.815E-04	-9.562E-02
		22.50	-4.389E-01	-1.120E-05	-7.774E-06	-1.372E-04	-1.066E-04	4.746E-02
		45.00	-4.389E-01	1.268E-02	-7.774E-06	-1.372E-04	6.835E-05	-9.511E-02
53	LOAD2							
		0.00	-3.511E-01	-1.271E-02	-6.219E-06	-1.372E-04	-2.252E-04	-9.562E-02
		22.50	-3.511E-01	-1.120E-05	-6.219E-06	-1.372E-04	-8.525E-05	4.746E-02
		45.00	-3.511E-01	1.268E-02	-6.219E-06	-1.372E-04	5.468E-05	-9.511E-02
54	LOAD1							
		0.00	-4.396E-01	-1.269E-02	1.888E-06	-1.372E-04	6.835E-05	-9.511E-02
		22.50	-4.396E-01	2.837E-06	1.888E-06	-1.372E-04	2.588E-05	4.764E-02
		45.00	-4.396E-01	1.270E-02	1.888E-06	-1.372E-04	-1.660E-05	-9.524E-02
54	LOAD2							
		0.00	-3.517E-01	-1.269E-02	1.510E-06	-1.372E-04	5.468E-05	-9.511E-02
		22.50	-3.517E-01	2.837E-06	1.510E-06	-1.372E-04	2.070E-05	4.764E-02
		45.00	-3.517E-01	1.270E-02	1.510E-06	-1.372E-04	-1.328E-05	-9.524E-02
55	LOAD1							
		0.00	-4.398E-01	-1.270E-02	0.00	-1.372E-04	-1.660E-05	-9.524E-02
		22.50	-4.398E-01	0.00	0.00	-1.372E-04	-6.283E-06	4.760E-02
		45.00	-4.398E-01	1.269E-02	0.00	-1.372E-04	4.030E-06	-9.521E-02
55	LOAD2							
		0.00	-3.518E-01	-1.270E-02	0.00	-1.372E-04	-1.328E-05	-9.524E-02
		22.50	-3.518E-01	0.00	0.00	-1.372E-04	-5.027E-06	4.760E-02
		45.00	-3.518E-01	1.269E-02	0.00	-1.372E-04	3.224E-06	-9.521E-02
56	LOAD1							
		0.00	-4.398E-01	-1.269E-02	0.00	-1.372E-04	4.030E-06	-9.521E-02
		22.50	-4.398E-01	0.00	0.00	-1.372E-04	1.526E-06	4.761E-02
		45.00	-4.398E-01	1.270E-02	0.00	-1.372E-04	0.00	-9.522E-02
56	LOAD2							
		0.00	-3.518E-01	-1.269E-02	0.00	-1.372E-04	3.224E-06	-9.521E-02
		22.50	-3.518E-01	0.00	0.00	-1.372E-04	1.221E-06	4.761E-02
		45.00	-3.518E-01	1.270E-02	0.00	-1.372E-04	0.00	-9.522E-02
57	LOAD1							
		0.00	-4.398E-01	-1.270E-02	0.00	-1.372E-04	0.00	-9.522E-02

	22.50	-4.398E-01	0.00	0.00	-1.372E-04	0.00	4.761E-02
	45.00	-4.398E-01	1.270E-02	0.00	-1.372E-04	0.00	-9.521E-02
57 LOAD2							
	0.00	-3.519E-01	-1.270E-02	0.00	-1.372E-04	0.00	-9.522E-02
	22.50	-3.519E-01	0.00	0.00	-1.372E-04	0.00	4.761E-02
	45.00	-3.519E-01	1.270E-02	0.00	-1.372E-04	0.00	-9.521E-02
58 LOAD1							
	0.00	-4.398E-01	-1.270E-02	0.00	-1.372E-04	0.00	-9.521E-02
	22.50	-4.398E-01	0.00	0.00	-1.372E-04	0.00	4.761E-02
	45.00	-4.398E-01	1.270E-02	0.00	-1.372E-04	0.00	-9.521E-02
58 LOAD2							
	0.00	-3.519E-01	-1.270E-02	0.00	-1.372E-04	0.00	-9.521E-02
	22.50	-3.519E-01	0.00	0.00	-1.372E-04	0.00	4.761E-02
	45.00	-3.519E-01	1.270E-02	0.00	-1.372E-04	0.00	-9.521E-02
59 LOAD1							
	0.00	-4.398E-01	-1.270E-02	0.00	-1.372E-04	0.00	-9.521E-02
	22.50	-4.398E-01	0.00	0.00	-1.372E-04	0.00	4.761E-02
	45.00	-4.398E-01	1.270E-02	0.00	-1.372E-04	0.00	-9.521E-02
59 LOAD2							
	0.00	-3.519E-01	-1.270E-02	0.00	-1.372E-04	0.00	-9.521E-02
	22.50	-3.519E-01	0.00	0.00	-1.372E-04	0.00	4.761E-02
	45.00	-3.519E-01	1.270E-02	0.00	-1.372E-04	0.00	-9.521E-02
60 LOAD1							
	0.00	-4.398E-01	-1.270E-02	0.00	-1.372E-04	0.00	-9.521E-02
	22.50	-4.398E-01	0.00	0.00	-1.372E-04	0.00	4.761E-02
	45.00	-4.398E-01	1.270E-02	0.00	-1.372E-04	0.00	-9.521E-02
60 LOAD2							
	0.00	-3.519E-01	-1.270E-02	0.00	-1.372E-04	0.00	-9.521E-02
	22.50	-3.519E-01	0.00	0.00	-1.372E-04	0.00	4.761E-02
	45.00	-3.519E-01	1.270E-02	0.00	-1.372E-04	0.00	-9.521E-02
61 LOAD1							
	0.00	-4.398E-01	-1.270E-02	0.00	-1.372E-04	0.00	-9.521E-02
	22.50	-4.398E-01	0.00	0.00	-1.372E-04	0.00	4.761E-02
	45.00	-4.398E-01	1.270E-02	0.00	-1.372E-04	0.00	-9.521E-02
61 LOAD2							
	0.00	-3.519E-01	-1.270E-02	0.00	-1.372E-04	0.00	-9.521E-02
	22.50	-3.519E-01	0.00	0.00	-1.372E-04	0.00	4.761E-02
	45.00	-3.519E-01	1.270E-02	0.00	-1.372E-04	0.00	-9.521E-02
62 LOAD1							
	0.00	-4.398E-01	-1.270E-02	0.00	-1.372E-04	0.00	-9.521E-02
	22.50	-4.398E-01	0.00	0.00	-1.372E-04	0.00	4.761E-02
	45.00	-4.398E-01	1.270E-02	0.00	-1.372E-04	0.00	-9.521E-02
62 LOAD2							
	0.00	-3.519E-01	-1.270E-02	0.00	-1.372E-04	0.00	-9.521E-02
	22.50	-3.519E-01	0.00	0.00	-1.372E-04	0.00	4.761E-02
	45.00	-3.519E-01	1.270E-02	0.00	-1.372E-04	0.00	-9.521E-02
63 LOAD1							
	0.00	-4.398E-01	-1.270E-02	0.00	-1.372E-04	0.00	-9.521E-02
	22.50	-4.398E-01	0.00	0.00	-1.372E-04	0.00	4.761E-02
	45.00	-4.398E-01	1.270E-02	0.00	-1.372E-04	0.00	-9.521E-02
63 LOAD2							
	0.00	-3.519E-01	-1.270E-02	0.00	-1.372E-04	0.00	-9.521E-02
	22.50	-3.519E-01	0.00	0.00	-1.372E-04	0.00	4.761E-02
	45.00	-3.519E-01	1.270E-02	0.00	-1.372E-04	0.00	-9.521E-02
64 LOAD1							
	0.00	-4.398E-01	-1.270E-02	0.00	-1.372E-04	0.00	-9.521E-02
	22.50	-4.398E-01	0.00	0.00	-1.372E-04	0.00	4.761E-02
	45.00	-4.398E-01	1.270E-02	0.00	-1.372E-04	0.00	-9.521E-02
64 LOAD2							

	0.00	-3.519E-01	-1.270E-02	0.00	-1.372E-04	0.00	-9.521E-02
	22.50	-3.519E-01	0.00	0.00	-1.372E-04	0.00	4.761E-02
	45.00	-3.519E-01	1.270E-02	0.00	-1.372E-04	0.00	-9.521E-02
65	LOAD1						
	0.00	-4.398E-01	-1.270E-02	0.00	-1.372E-04	0.00	-9.521E-02
	22.50	-4.398E-01	0.00	0.00	-1.372E-04	0.00	4.761E-02
	45.00	-4.398E-01	1.270E-02	0.00	-1.372E-04	0.00	-9.521E-02
65	LOAD2						
	0.00	-3.519E-01	-1.270E-02	0.00	-1.372E-04	0.00	-9.521E-02
	22.50	-3.519E-01	0.00	0.00	-1.372E-04	0.00	4.761E-02
	45.00	-3.519E-01	1.270E-02	0.00	-1.372E-04	0.00	-9.521E-02
66	LOAD1						
	0.00	-4.398E-01	-1.270E-02	0.00	-1.372E-04	0.00	-9.521E-02
	22.50	-4.398E-01	0.00	0.00	-1.372E-04	0.00	4.761E-02
	45.00	-4.398E-01	1.270E-02	0.00	-1.372E-04	0.00	-9.521E-02
66	LOAD2						
	0.00	-3.519E-01	-1.270E-02	0.00	-1.372E-04	0.00	-9.521E-02
	22.50	-3.519E-01	0.00	0.00	-1.372E-04	0.00	4.761E-02
	45.00	-3.519E-01	1.270E-02	0.00	-1.372E-04	0.00	-9.521E-02
67	LOAD1						
	0.00	-4.398E-01	-1.270E-02	0.00	-1.372E-04	0.00	-9.521E-02
	22.50	-4.398E-01	0.00	0.00	-1.372E-04	0.00	4.761E-02
	45.00	-4.398E-01	1.270E-02	0.00	-1.372E-04	0.00	-9.521E-02
67	LOAD2						
	0.00	-3.519E-01	-1.270E-02	0.00	-1.372E-04	0.00	-9.521E-02
	22.50	-3.519E-01	0.00	0.00	-1.372E-04	0.00	4.761E-02
	45.00	-3.519E-01	1.270E-02	0.00	-1.372E-04	0.00	-9.521E-02
68	LOAD1						
	0.00	-4.398E-01	-1.270E-02	0.00	-1.372E-04	0.00	-9.521E-02
	22.50	-4.398E-01	0.00	0.00	-1.372E-04	0.00	4.761E-02
	45.00	-4.398E-01	1.270E-02	0.00	-1.372E-04	0.00	-9.521E-02
68	LOAD2						
	0.00	-3.519E-01	-1.270E-02	0.00	-1.372E-04	0.00	-9.521E-02
	22.50	-3.519E-01	0.00	0.00	-1.372E-04	0.00	4.761E-02
	45.00	-3.519E-01	1.270E-02	0.00	-1.372E-04	0.00	-9.521E-02
69	LOAD1						
	0.00	-4.398E-01	-1.270E-02	0.00	-1.372E-04	0.00	-9.521E-02
	22.50	-4.398E-01	0.00	0.00	-1.372E-04	0.00	4.761E-02
	45.00	-4.398E-01	1.270E-02	0.00	-1.372E-04	0.00	-9.521E-02
69	LOAD2						
	0.00	-3.519E-01	-1.270E-02	0.00	-1.372E-04	0.00	-9.521E-02
	22.50	-3.519E-01	0.00	0.00	-1.372E-04	0.00	4.761E-02
	45.00	-3.519E-01	1.270E-02	0.00	-1.372E-04	0.00	-9.521E-02
70	LOAD1						
	0.00	-4.398E-01	-1.270E-02	0.00	-1.372E-04	0.00	-9.521E-02
	22.50	-4.398E-01	0.00	0.00	-1.372E-04	0.00	4.761E-02
	45.00	-4.398E-01	1.270E-02	0.00	-1.372E-04	0.00	-9.521E-02
70	LOAD2						
	0.00	-3.519E-01	-1.270E-02	0.00	-1.372E-04	0.00	-9.521E-02
	22.50	-3.519E-01	0.00	0.00	-1.372E-04	0.00	4.761E-02
	45.00	-3.519E-01	1.270E-02	0.00	-1.372E-04	0.00	-9.521E-02
71	LOAD1						
	0.00	-4.398E-01	-1.270E-02	0.00	-1.372E-04	0.00	-9.521E-02
	22.50	-4.398E-01	0.00	0.00	-1.372E-04	0.00	4.761E-02
	45.00	-4.398E-01	1.270E-02	0.00	-1.372E-04	0.00	-9.521E-02
71	LOAD2						
	0.00	-3.519E-01	-1.270E-02	0.00	-1.372E-04	0.00	-9.521E-02
	22.50	-3.519E-01	0.00	0.00	-1.372E-04	0.00	4.761E-02
	45.00	-3.519E-01	1.270E-02	0.00	-1.372E-04	0.00	-9.521E-02

72	LOAD1						
	0.00	-4.398E-01	-1.270E-02	0.00	-1.372E-04	0.00	-9.521E-02
	22.50	-4.398E-01	0.00	0.00	-1.372E-04	0.00	4.761E-02
	45.00	-4.398E-01	1.270E-02	0.00	-1.372E-04	0.00	-9.521E-02
72	LOAD2						
	0.00	-3.519E-01	-1.270E-02	0.00	-1.372E-04	0.00	-9.521E-02
	22.50	-3.519E-01	0.00	0.00	-1.372E-04	0.00	4.761E-02
	45.00	-3.519E-01	1.270E-02	0.00	-1.372E-04	0.00	-9.521E-02
73	LOAD1						
	0.00	-4.398E-01	-1.270E-02	0.00	-1.372E-04	0.00	-9.521E-02
	22.50	-4.398E-01	0.00	0.00	-1.372E-04	0.00	4.761E-02
	45.00	-4.398E-01	1.270E-02	0.00	-1.372E-04	0.00	-9.521E-02
73	LOAD2						
	0.00	-3.519E-01	-1.270E-02	0.00	-1.372E-04	0.00	-9.521E-02
	22.50	-3.519E-01	0.00	0.00	-1.372E-04	0.00	4.761E-02
	45.00	-3.519E-01	1.270E-02	0.00	-1.372E-04	0.00	-9.521E-02
74	LOAD1						
	0.00	-4.398E-01	-1.270E-02	0.00	-1.372E-04	0.00	-9.521E-02
	22.50	-4.398E-01	0.00	0.00	-1.372E-04	0.00	4.761E-02
	45.00	-4.398E-01	1.270E-02	0.00	-1.372E-04	0.00	-9.521E-02
74	LOAD2						
	0.00	-3.519E-01	-1.270E-02	0.00	-1.372E-04	0.00	-9.521E-02
	22.50	-3.519E-01	0.00	0.00	-1.372E-04	0.00	4.761E-02
	45.00	-3.519E-01	1.270E-02	0.00	-1.372E-04	0.00	-9.521E-02
75	LOAD1						
	0.00	-4.398E-01	-1.270E-02	0.00	-1.372E-04	0.00	-9.521E-02
	22.50	-4.398E-01	0.00	0.00	-1.372E-04	0.00	4.761E-02
	45.00	-4.398E-01	1.270E-02	0.00	-1.372E-04	0.00	-9.521E-02
75	LOAD2						
	0.00	-3.519E-01	-1.270E-02	0.00	-1.372E-04	0.00	-9.521E-02
	22.50	-3.519E-01	0.00	0.00	-1.372E-04	0.00	4.761E-02
	45.00	-3.519E-01	1.270E-02	0.00	-1.372E-04	0.00	-9.521E-02
76	LOAD1						
	0.00	-4.398E-01	-1.270E-02	0.00	-1.372E-04	0.00	-9.521E-02
	22.50	-4.398E-01	0.00	0.00	-1.372E-04	0.00	4.761E-02
	45.00	-4.398E-01	1.270E-02	0.00	-1.372E-04	0.00	-9.521E-02
76	LOAD2						
	0.00	-3.519E-01	-1.270E-02	0.00	-1.372E-04	0.00	-9.521E-02
	22.50	-3.519E-01	0.00	0.00	-1.372E-04	0.00	4.761E-02
	45.00	-3.519E-01	1.270E-02	0.00	-1.372E-04	0.00	-9.521E-02
77	LOAD1						
	0.00	-4.398E-01	-1.270E-02	0.00	-1.372E-04	0.00	-9.521E-02
	22.50	-4.398E-01	0.00	0.00	-1.372E-04	0.00	4.761E-02
	45.00	-4.398E-01	1.270E-02	0.00	-1.372E-04	0.00	-9.521E-02
77	LOAD2						
	0.00	-3.519E-01	-1.270E-02	0.00	-1.372E-04	0.00	-9.521E-02
	22.50	-3.519E-01	0.00	0.00	-1.372E-04	0.00	4.761E-02
	45.00	-3.519E-01	1.270E-02	0.00	-1.372E-04	0.00	-9.521E-02
78	LOAD1						
	0.00	-4.398E-01	-1.270E-02	0.00	-1.372E-04	0.00	-9.521E-02
	22.50	-4.398E-01	0.00	0.00	-1.372E-04	0.00	4.761E-02
	45.00	-4.398E-01	1.270E-02	0.00	-1.372E-04	0.00	-9.521E-02
78	LOAD2						
	0.00	-3.519E-01	-1.270E-02	0.00	-1.372E-04	0.00	-9.521E-02
	22.50	-3.519E-01	0.00	0.00	-1.372E-04	0.00	4.761E-02
	45.00	-3.519E-01	1.270E-02	0.00	-1.372E-04	0.00	-9.521E-02
79	LOAD1						
	0.00	-4.398E-01	-1.270E-02	0.00	-1.372E-04	0.00	-9.521E-02

		22.50	-4.398E-01	0.00	0.00	-1.372E-04	0.00	4.761E-02
		45.00	-4.398E-01	1.270E-02	0.00	-1.372E-04	0.00	-9.521E-02
79	LOAD2							
		0.00	-3.519E-01	-1.270E-02	0.00	-1.372E-04	0.00	-9.521E-02
		22.50	-3.519E-01	0.00	0.00	-1.372E-04	0.00	4.761E-02
		45.00	-3.519E-01	1.270E-02	0.00	-1.372E-04	0.00	-9.521E-02
80	LOAD1							
		0.00	-4.398E-01	-1.270E-02	0.00	-1.372E-04	0.00	-9.521E-02
		22.50	-4.398E-01	0.00	0.00	-1.372E-04	0.00	4.761E-02
		45.00	-4.398E-01	1.270E-02	0.00	-1.372E-04	0.00	-9.522E-02
80	LOAD2							
		0.00	-3.519E-01	-1.270E-02	0.00	-1.372E-04	0.00	-9.521E-02
		22.50	-3.519E-01	0.00	0.00	-1.372E-04	0.00	4.761E-02
		45.00	-3.519E-01	1.270E-02	0.00	-1.372E-04	0.00	-9.522E-02
81	LOAD1							
		0.00	-4.398E-01	-1.270E-02	0.00	-1.372E-04	0.00	-9.522E-02
		22.50	-4.398E-01	0.00	0.00	-1.372E-04	0.00	4.761E-02
		45.00	-4.398E-01	1.269E-02	0.00	-1.372E-04	0.00	-9.521E-02
81	LOAD2							
		0.00	-3.519E-01	-1.270E-02	0.00	-1.372E-04	0.00	-9.522E-02
		22.50	-3.519E-01	0.00	0.00	-1.372E-04	0.00	4.761E-02
		45.00	-3.519E-01	1.269E-02	0.00	-1.372E-04	0.00	-9.521E-02
82	LOAD1							
		0.00	-4.398E-01	-1.269E-02	0.00	-1.372E-04	0.00	-9.521E-02
		22.50	-4.398E-01	0.00	0.00	-1.372E-04	-1.412E-06	4.760E-02
		45.00	-4.398E-01	1.270E-02	0.00	-1.372E-04	-3.729E-06	-9.524E-02
82	LOAD2							
		0.00	-3.518E-01	-1.269E-02	0.00	-1.372E-04	0.00	-9.521E-02
		22.50	-3.518E-01	0.00	0.00	-1.372E-04	-1.129E-06	4.760E-02
		45.00	-3.518E-01	1.270E-02	0.00	-1.372E-04	-2.983E-06	-9.524E-02
83	LOAD1							
		0.00	-4.397E-01	-1.270E-02	0.00	-1.372E-04	-3.729E-06	-9.524E-02
		22.50	-4.397E-01	-2.873E-06	0.00	-1.372E-04	5.813E-06	4.765E-02
		45.00	-4.397E-01	1.269E-02	0.00	-1.372E-04	1.536E-05	-9.511E-02
83	LOAD2							
		0.00	-3.518E-01	-1.270E-02	0.00	-1.372E-04	-2.983E-06	-9.524E-02
		22.50	-3.518E-01	-2.873E-06	0.00	-1.372E-04	4.651E-06	4.765E-02
		45.00	-3.518E-01	1.269E-02	0.00	-1.372E-04	1.228E-05	-9.511E-02
84	LOAD1							
		0.00	-4.393E-01	-1.268E-02	1.746E-06	-1.372E-04	1.536E-05	-9.511E-02
		22.50	-4.393E-01	1.135E-05	1.746E-06	-1.372E-04	-2.394E-05	4.745E-02
		45.00	-4.393E-01	1.271E-02	1.746E-06	-1.372E-04	-6.324E-05	-9.562E-02
84	LOAD2							
		0.00	-3.515E-01	-1.268E-02	1.397E-06	-1.372E-04	1.228E-05	-9.511E-02
		22.50	-3.515E-01	1.135E-05	1.397E-06	-1.372E-04	-1.915E-05	4.745E-02
		45.00	-3.515E-01	1.271E-02	1.397E-06	-1.372E-04	-5.059E-05	-9.562E-02
85	LOAD1							
		0.00	-4.377E-01	-1.274E-02	-7.192E-06	-1.372E-04	-6.324E-05	-9.562E-02
		22.50	-4.377E-01	-4.480E-05	-7.192E-06	-1.372E-04	9.859E-05	4.821E-02
		45.00	-4.377E-01	1.265E-02	-7.192E-06	-1.372E-04	2.604E-04	-9.361E-02
85	LOAD2							
		0.00	-3.502E-01	-1.274E-02	-5.754E-06	-1.372E-04	-5.059E-05	-9.562E-02
		22.50	-3.502E-01	-4.480E-05	-5.754E-06	-1.372E-04	7.887E-05	4.821E-02
		45.00	-3.502E-01	1.265E-02	-5.754E-06	-1.372E-04	2.083E-04	-9.361E-02
86	LOAD1							
		0.00	-4.310E-01	-1.252E-02	2.967E-05	-1.372E-04	2.604E-04	-9.361E-02
		22.50	-4.310E-01	1.769E-04	2.967E-05	-1.372E-04	-4.071E-04	4.524E-02
		45.00	-4.310E-01	1.287E-02	2.967E-05	-1.372E-04	-1.075E-03	-1.016E-01
86	LOAD2							

	0.00	-3.448E-01	-1.252E-02	2.373E-05	-1.372E-04	2.083E-04	-9.361E-02
	22.50	-3.448E-01	1.769E-04	2.373E-05	-1.372E-04	-3.257E-04	4.524E-02
	45.00	-3.448E-01	1.287E-02	2.373E-05	-1.372E-04	-8.597E-04	-1.016E-01
87	LOAD1						
	0.00	-4.027E-01	-1.339E-02	-1.325E-04	-1.372E-04	-1.075E-03	-1.016E-01
	22.50	-4.027E-01	-6.937E-04	-1.325E-04	-1.372E-04	1.906E-03	5.686E-02
	45.00	-4.027E-01	1.200E-02	-1.325E-04	-1.372E-04	4.886E-03	-7.035E-02
87	LOAD2						
	0.00	-3.221E-01	-1.339E-02	-1.060E-04	-1.372E-04	-8.597E-04	-1.016E-01
	22.50	-3.221E-01	-6.937E-04	-1.060E-04	-1.372E-04	1.525E-03	5.686E-02
	45.00	-3.221E-01	1.200E-02	-1.060E-04	-1.372E-04	3.909E-03	-7.035E-02
88	LOAD1						
	0.00	-3.199E-01	-9.012E-03	1.886E-03	-1.372E-04	4.886E-03	-7.035E-02
	9.00	-3.199E-01	-3.933E-03	1.886E-03	-1.372E-04	-1.209E-02	-1.209E-02
	18.00	-3.199E-01	1.145E-03	1.886E-03	-1.372E-04	-2.906E-02	4.550E-04
88	LOAD2						
	0.00	-2.559E-01	-9.012E-03	1.509E-03	-1.372E-04	3.909E-03	-7.035E-02
	9.00	-2.559E-01	-3.933E-03	1.509E-03	-1.372E-04	-9.671E-03	-1.209E-02
	18.00	-2.559E-01	1.145E-03	1.509E-03	-1.372E-04	-2.325E-02	4.550E-04
89	LOAD1						
	0.00	-2.496E-01	-2.024E-03	5.330E-03	-1.372E-04	-2.906E-02	4.550E-04
	4.50	-2.496E-01	5.147E-04	5.330E-03	-1.372E-04	-5.305E-02	3.852E-03
	9.00	-2.496E-01	3.054E-03	5.330E-03	-1.372E-04	-7.704E-02	-4.178E-03
89	LOAD2						
	0.00	-1.997E-01	-2.024E-03	4.264E-03	-1.372E-04	-2.325E-02	4.550E-04
	4.50	-1.997E-01	5.147E-04	4.264E-03	-1.372E-04	-4.244E-02	3.852E-03
	9.00	-1.997E-01	3.054E-03	4.264E-03	-1.372E-04	-6.163E-02	-4.178E-03
90	LOAD1						
	0.00	-1.841E-01	-3.344E-04	-4.548E-04	-1.372E-04	-7.704E-02	-4.178E-03
	4.50	-1.841E-01	2.205E-03	-4.548E-04	-1.372E-04	-7.499E-02	-8.386E-03
	9.00	-1.841E-01	4.744E-03	-4.548E-04	-1.372E-04	-7.294E-02	-2.402E-02
90	LOAD2						
	0.00	-1.473E-01	-3.344E-04	-3.638E-04	-1.372E-04	-6.163E-02	-4.178E-03
	4.50	-1.473E-01	2.205E-03	-3.638E-04	-1.372E-04	-5.999E-02	-8.386E-03
	9.00	-1.473E-01	4.744E-03	-3.638E-04	-1.372E-04	-5.835E-02	-2.402E-02
91	LOAD1						
	0.00	-4.908E-02	-5.254E-03	-4.867E-02	-1.372E-04	-7.294E-02	-2.402E-02
	4.50	-4.908E-02	-2.715E-03	-4.867E-02	-1.372E-04	1.461E-01	-6.088E-03
	9.00	-4.908E-02	-1.761E-04	-4.867E-02	-1.372E-04	3.651E-01	4.168E-04
91	LOAD2						
	0.00	-3.926E-02	-5.254E-03	-3.893E-02	-1.372E-04	-5.835E-02	-2.402E-02
	4.50	-3.926E-02	-2.715E-03	-3.893E-02	-1.372E-04	1.168E-01	-6.088E-03
	9.00	-3.926E-02	-1.761E-04	-3.893E-02	-1.372E-04	2.921E-01	4.168E-04
92	LOAD1						
	0.00	-4.867E-02	-1.761E-04	4.908E-02	4.168E-04	3.651E-01	1.372E-04
	4.50	-4.867E-02	2.363E-03	4.908E-02	4.168E-04	1.442E-01	-4.783E-03
	9.00	-4.867E-02	4.902E-03	4.908E-02	4.168E-04	-7.666E-02	-2.113E-02
92	LOAD2						
	0.00	-3.893E-02	-1.761E-04	3.926E-02	4.168E-04	2.921E-01	1.372E-04
	4.50	-3.893E-02	2.363E-03	3.926E-02	4.168E-04	1.154E-01	-4.783E-03
	9.00	-3.893E-02	4.902E-03	3.926E-02	4.168E-04	-6.133E-02	-2.113E-02
93	LOAD1						
	0.00	-1.798E-01	-3.735E-03	-9.799E-05	4.168E-04	-7.666E-02	-2.113E-02
	4.50	-1.798E-01	-1.196E-03	-9.799E-05	4.168E-04	-7.622E-02	-1.004E-02
	9.00	-1.798E-01	1.343E-03	-9.799E-05	4.168E-04	-7.578E-02	-1.037E-02
93	LOAD2						
	0.00	-1.439E-01	-3.735E-03	-7.839E-05	4.168E-04	-6.133E-02	-2.113E-02
	4.50	-1.439E-01	-1.196E-03	-7.839E-05	4.168E-04	-6.098E-02	-1.004E-02
	9.00	-1.439E-01	1.343E-03	-7.839E-05	4.168E-04	-6.062E-02	-1.037E-02

94	LOAD1							
		0.00	-2.423E-01	4.159E-03	-6.532E-03	4.168E-04	-7.578E-02	-1.037E-02
		4.50	-2.423E-01	6.698E-03	-6.532E-03	4.168E-04	-4.639E-02	-3.480E-02
		9.00	-2.423E-01	9.237E-03	-6.532E-03	4.168E-04	-1.699E-02	-7.065E-02
94	LOAD2							
		0.00	-1.939E-01	4.159E-03	-5.225E-03	4.168E-04	-6.062E-02	-1.037E-02
		4.50	-1.939E-01	6.698E-03	-5.225E-03	4.168E-04	-3.711E-02	-3.480E-02
		9.00	-1.939E-01	9.237E-03	-5.225E-03	4.168E-04	-1.359E-02	-7.065E-02
95	LOAD1							
		0.00	-3.720E-01	-1.200E-02	-4.835E-04	4.168E-04	-1.699E-02	-7.065E-02
		22.50	-3.720E-01	6.944E-04	-4.835E-04	4.168E-04	-6.115E-03	5.654E-02
		45.00	-3.720E-01	1.339E-02	-4.835E-04	4.168E-04	4.763E-03	-1.019E-01
95	LOAD2							
		0.00	-2.976E-01	-1.200E-02	-3.868E-04	4.168E-04	-1.359E-02	-7.065E-02
		22.50	-2.976E-01	6.944E-04	-3.868E-04	4.168E-04	-4.892E-03	5.654E-02
		45.00	-2.976E-01	1.339E-02	-3.868E-04	4.168E-04	3.811E-03	-1.019E-01
96	LOAD1							
		0.00	-4.236E-01	-1.291E-02	1.316E-04	4.168E-04	4.763E-03	-1.019E-01
		22.50	-4.236E-01	-2.197E-04	1.316E-04	4.168E-04	1.802E-03	4.586E-02
		45.00	-4.236E-01	1.248E-02	1.316E-04	4.168E-04	-1.160E-03	-9.202E-02
96	LOAD2							
		0.00	-3.389E-01	-1.291E-02	1.053E-04	4.168E-04	3.811E-03	-1.019E-01
		22.50	-3.389E-01	-2.197E-04	1.053E-04	4.168E-04	1.441E-03	4.586E-02
		45.00	-3.389E-01	1.248E-02	1.053E-04	4.168E-04	-9.281E-04	-9.202E-02
97	LOAD1							
		0.00	-4.360E-01	-1.247E-02	-3.208E-05	4.168E-04	-1.160E-03	-9.202E-02
		22.50	-4.360E-01	2.208E-04	-3.208E-05	4.168E-04	-4.383E-04	4.583E-02
		45.00	-4.360E-01	1.292E-02	-3.208E-05	4.168E-04	2.835E-04	-1.020E-01
97	LOAD2							
		0.00	-3.488E-01	-1.247E-02	-2.566E-05	4.168E-04	-9.281E-04	-9.202E-02
		22.50	-3.488E-01	2.208E-04	-2.566E-05	4.168E-04	-3.506E-04	4.583E-02
		45.00	-3.488E-01	1.292E-02	-2.566E-05	4.168E-04	2.268E-04	-1.020E-01
98	LOAD1							
		0.00	-4.389E-01	-1.340E-02	7.996E-06	4.168E-04	2.835E-04	-1.020E-01
		22.50	-4.389E-01	-7.068E-04	7.996E-06	4.168E-04	1.035E-04	5.677E-02
		45.00	-4.389E-01	1.199E-02	7.996E-06	4.168E-04	-7.637E-05	-7.015E-02
98	LOAD2							
		0.00	-3.511E-01	-1.340E-02	6.397E-06	4.168E-04	2.268E-04	-1.020E-01
		22.50	-3.511E-01	-7.068E-04	6.397E-06	4.168E-04	8.284E-05	5.677E-02
		45.00	-3.511E-01	1.199E-02	6.397E-06	4.168E-04	-6.109E-05	-7.015E-02
99	LOAD1							
		0.00	-4.396E-01	-9.179E-03	-2.750E-06	4.168E-04	-7.637E-05	-7.015E-02
		16.58	-4.396E-01	1.762E-04	-2.750E-06	4.168E-04	-3.077E-05	4.482E-03
		33.16	-4.396E-01	9.531E-03	-2.750E-06	4.168E-04	1.483E-05	-7.599E-02
99	LOAD2							
		0.00	-3.516E-01	-9.179E-03	-2.200E-06	4.168E-04	-6.109E-05	-7.015E-02
		16.58	-3.516E-01	1.762E-04	-2.200E-06	4.168E-04	-2.462E-05	4.482E-03
		33.16	-3.516E-01	9.531E-03	-2.200E-06	4.168E-04	1.186E-05	-7.599E-02
100	LOAD1							
		0.00	-4.397E-01	-1.249E-02	0.00	4.168E-04	1.483E-05	-7.599E-02
		4.50	-4.397E-01	-9.953E-03	0.00	4.168E-04	1.280E-05	-2.549E-02
		9.00	-4.397E-01	-7.414E-03	0.00	4.168E-04	1.078E-05	1.359E-02
100	LOAD2							
		0.00	-3.518E-01	-1.249E-02	0.00	4.168E-04	1.186E-05	-7.599E-02
		4.50	-3.518E-01	-9.953E-03	0.00	4.168E-04	1.024E-05	-2.549E-02
		9.00	-3.518E-01	-7.414E-03	0.00	4.168E-04	8.624E-06	1.359E-02
101	LOAD1							
		0.00	-4.397E-01	-7.414E-03	0.00	4.168E-04	1.078E-05	1.359E-02

		13.00	-4.397E-01	-8.194E-05	0.00	4.168E-04	4.934E-06	6.229E-02
		25.99	-4.397E-01	7.250E-03	0.00	4.168E-04	0.00	1.572E-02
101	LOAD2							
		0.00	-3.518E-01	-7.414E-03	0.00	4.168E-04	8.624E-06	1.359E-02
		13.00	-3.518E-01	-8.194E-05	0.00	4.168E-04	3.947E-06	6.229E-02
		25.99	-3.518E-01	7.250E-03	0.00	4.168E-04	0.00	1.572E-02
102	LOAD1							
		0.00	-4.397E-01	7.250E-03	0.00	4.168E-04	0.00	1.572E-02
		6.38	-4.397E-01	1.085E-02	0.00	4.168E-04	-3.779E-06	-4.197E-02
		12.75	-4.397E-01	1.444E-02	0.00	4.168E-04	-6.647E-06	-1.226E-01
102	LOAD2							
		0.00	-3.518E-01	7.250E-03	0.00	4.168E-04	0.00	1.572E-02
		6.38	-3.518E-01	1.085E-02	0.00	4.168E-04	-3.023E-06	-4.197E-02
		12.75	-3.518E-01	1.444E-02	0.00	4.168E-04	-5.317E-06	-1.226E-01

TRAIN B - BACKWASH LINE SEISMIC STRESS ANALYSIS SAP2000 INPUT/OUTPUT

ATTACHMENT 10.7
(SEE SECTION 7.7.3)

S A P 2 0 0 0 (R)

Structural Analysis Programs

Nonlinear Version 7.40

Copyright (C) 1978-2000
COMPUTERS AND STRUCTURES, INC.
All rights reserved

This copy of SAP2000 is for the exclusive use of

THE LICENSEE

Unauthorized use is in violation of Federal copyright laws

It is the responsibility of the user to verify all
results produced by this program

21 Dec 2007 10:09:56

D I S P L A C E M E N T D E G R E E S O F F R E E D O M

(A) = Active DOF, equilibrium equation
(-) = Restrained DOF, reaction computed
(+) = Constrained DOF
(>) = External substructure DOF
( ) = Null DOF

JOINTS			U1	U2	U3	R1	R2	R3
54	TO	61	A	A	A	A	A	A
54A	TO	61A	-	-	-	-	-	-
545501	TO	606109	A	A	A	A	A	A

A S S E M B L E D J O I N T M A S S E S

IN LOCAL COORDINATES

JOINT	U1	U2	U3	R1	R2	R3
54	5.56E-05	5.56E-05	5.56E-05	.000000	.000000	.000000
55	1.32E-05	1.32E-05	1.32E-05	.000000	.000000	.000000
56	1.32E-05	1.32E-05	1.32E-05	.000000	.000000	.000000
57	1.32E-05	1.32E-05	1.32E-05	.000000	.000000	.000000
58	8.57E-06	8.57E-06	8.57E-06	.000000	.000000	.000000
59	1.32E-05	1.32E-05	1.32E-05	.000000	.000000	.000000
60	1.32E-05	1.32E-05	1.32E-05	.000000	.000000	.000000
61	4.84E-05	4.84E-05	4.84E-05	.000000	.000000	.000000
54A	3.08E-05	3.08E-05	3.08E-05	.000000	.000000	.000000
61A	2.93E-05	2.93E-05	2.93E-05	.000000	.000000	.000000
545501	3.14E-05	3.14E-05	3.14E-05	.000000	.000000	.000000
545502	3.95E-05	3.95E-05	3.95E-05	.000000	.000000	.000000
545503	5.24E-05	5.24E-05	5.24E-05	.000000	.000000	.000000
545504	2.61E-05	2.61E-05	2.61E-05	.000000	.000000	.000000
545505	1.32E-05	1.32E-05	1.32E-05	.000000	.000000	.000000
545506	1.32E-05	1.32E-05	1.32E-05	.000000	.000000	.000000
555601	1.32E-05	1.32E-05	1.32E-05	.000000	.000000	.000000
555602	1.32E-05	1.32E-05	1.32E-05	.000000	.000000	.000000
555603	3.95E-05	3.95E-05	3.95E-05	.000000	.000000	.000000
555604	6.59E-05	6.59E-05	6.59E-05	.000000	.000000	.000000
555605	6.59E-05	6.59E-05	6.59E-05	.000000	.000000	.000000
555606	6.59E-05	6.59E-05	6.59E-05	.000000	.000000	.000000
555607	6.59E-05	6.59E-05	6.59E-05	.000000	.000000	.000000
555608	6.59E-05	6.59E-05	6.59E-05	.000000	.000000	.000000
555609	5.96E-05	5.96E-05	5.96E-05	.000000	.000000	.000000
555610	3.33E-05	3.33E-05	3.33E-05	.000000	.000000	.000000
555611	1.32E-05	1.32E-05	1.32E-05	.000000	.000000	.000000
555612	1.32E-05	1.32E-05	1.32E-05	.000000	.000000	.000000
565701	1.32E-05	1.32E-05	1.32E-05	.000000	.000000	.000000
565702	1.32E-05	1.32E-05	1.32E-05	.000000	.000000	.000000
565703	1.32E-05	1.32E-05	1.32E-05	.000000	.000000	.000000
565704	1.32E-05	1.32E-05	1.32E-05	.000000	.000000	.000000
565705	1.32E-05	1.32E-05	1.32E-05	.000000	.000000	.000000
565706	1.32E-05	1.32E-05	1.32E-05	.000000	.000000	.000000
575801	1.32E-05	1.32E-05	1.32E-05	.000000	.000000	.000000
575802	1.32E-05	1.32E-05	1.32E-05	.000000	.000000	.000000
575803	8.57E-06	8.57E-06	8.57E-06	.000000	.000000	.000000
585901	1.32E-05	1.32E-05	1.32E-05	.000000	.000000	.000000
585902	1.32E-05	1.32E-05	1.32E-05	.000000	.000000	.000000
585903	3.95E-05	3.95E-05	3.95E-05	.000000	.000000	.000000
585904	6.59E-05	6.59E-05	6.59E-05	.000000	.000000	.000000
585905	6.59E-05	6.59E-05	6.59E-05	.000000	.000000	.000000
585906	6.59E-05	6.59E-05	6.59E-05	.000000	.000000	.000000
585907	6.59E-05	6.59E-05	6.59E-05	.000000	.000000	.000000
585908	6.59E-05	6.59E-05	6.59E-05	.000000	.000000	.000000
585909	6.59E-05	6.59E-05	6.59E-05	.000000	.000000	.000000
585910	4.83E-05	4.83E-05	4.83E-05	.000000	.000000	.000000
585911	2.20E-05	2.20E-05	2.20E-05	.000000	.000000	.000000
585912	1.32E-05	1.32E-05	1.32E-05	.000000	.000000	.000000
585913	1.32E-05	1.32E-05	1.32E-05	.000000	.000000	.000000
596001	1.32E-05	1.32E-05	1.32E-05	.000000	.000000	.000000
596002	1.32E-05	1.32E-05	1.32E-05	.000000	.000000	.000000
596003	3.95E-05	3.95E-05	3.95E-05	.000000	.000000	.000000
596004	6.59E-05	6.59E-05	6.59E-05	.000000	.000000	.000000
596005	6.59E-05	6.59E-05	6.59E-05	.000000	.000000	.000000
596006	6.59E-05	6.59E-05	6.59E-05	.000000	.000000	.000000
596007	6.59E-05	6.59E-05	6.59E-05	.000000	.000000	.000000

596008	6.59E-05	6.59E-05	6.59E-05	.000000	.000000	.000000
596009	6.59E-05	6.59E-05	6.59E-05	.000000	.000000	.000000
596010	6.59E-05	6.59E-05	6.59E-05	.000000	.000000	.000000
596011	6.59E-05	6.59E-05	6.59E-05	.000000	.000000	.000000
596012	6.59E-05	6.59E-05	6.59E-05	.000000	.000000	.000000
596013	6.59E-05	6.59E-05	6.59E-05	.000000	.000000	.000000
596014	6.59E-05	6.59E-05	6.59E-05	.000000	.000000	.000000
596015	6.59E-05	6.59E-05	6.59E-05	.000000	.000000	.000000
596016	6.59E-05	6.59E-05	6.59E-05	.000000	.000000	.000000
596017	6.59E-05	6.59E-05	6.59E-05	.000000	.000000	.000000
596018	6.59E-05	6.59E-05	6.59E-05	.000000	.000000	.000000
596019	6.59E-05	6.59E-05	6.59E-05	.000000	.000000	.000000
596020	6.59E-05	6.59E-05	6.59E-05	.000000	.000000	.000000
596021	6.59E-05	6.59E-05	6.59E-05	.000000	.000000	.000000
596022	6.59E-05	6.59E-05	6.59E-05	.000000	.000000	.000000
596023	6.59E-05	6.59E-05	6.59E-05	.000000	.000000	.000000
596024	6.59E-05	6.59E-05	6.59E-05	.000000	.000000	.000000
596025	6.59E-05	6.59E-05	6.59E-05	.000000	.000000	.000000
596026	6.59E-05	6.59E-05	6.59E-05	.000000	.000000	.000000
596027	6.59E-05	6.59E-05	6.59E-05	.000000	.000000	.000000
596028	6.59E-05	6.59E-05	6.59E-05	.000000	.000000	.000000
596029	6.59E-05	6.59E-05	6.59E-05	.000000	.000000	.000000
596030	6.59E-05	6.59E-05	6.59E-05	.000000	.000000	.000000
596031	6.59E-05	6.59E-05	6.59E-05	.000000	.000000	.000000
596032	6.59E-05	6.59E-05	6.59E-05	.000000	.000000	.000000
596033	6.59E-05	6.59E-05	6.59E-05	.000000	.000000	.000000
596034	6.59E-05	6.59E-05	6.59E-05	.000000	.000000	.000000
596035	6.59E-05	6.59E-05	6.59E-05	.000000	.000000	.000000
596036	6.59E-05	6.59E-05	6.59E-05	.000000	.000000	.000000
596037	6.59E-05	6.59E-05	6.59E-05	.000000	.000000	.000000
596038	6.59E-05	6.59E-05	6.59E-05	.000000	.000000	.000000
596039	6.59E-05	6.59E-05	6.59E-05	.000000	.000000	.000000
596040	6.59E-05	6.59E-05	6.59E-05	.000000	.000000	.000000
596041	4.61E-05	4.61E-05	4.61E-05	.000000	.000000	.000000
596042	1.98E-05	1.98E-05	1.98E-05	.000000	.000000	.000000
596043	1.32E-05	1.32E-05	1.32E-05	.000000	.000000	.000000
596044	1.32E-05	1.32E-05	1.32E-05	.000000	.000000	.000000
606101	1.32E-05	1.32E-05	1.32E-05	.000000	.000000	.000000
606102	1.32E-05	1.32E-05	1.32E-05	.000000	.000000	.000000
606103	3.95E-05	3.95E-05	3.95E-05	.000000	.000000	.000000
606104	6.59E-05	6.59E-05	6.59E-05	.000000	.000000	.000000
606105	6.59E-05	6.59E-05	6.59E-05	.000000	.000000	.000000
606106	6.59E-05	6.59E-05	6.59E-05	.000000	.000000	.000000
606107	5.72E-05	5.72E-05	5.72E-05	.000000	.000000	.000000
606108	3.09E-05	3.09E-05	3.09E-05	.000000	.000000	.000000
606109	2.56E-05	2.56E-05	2.56E-05	.000000	.000000	.000000

T O T A L A S S E M B L E D J O I N T M A S S E S

IN GLOBAL COORDINATES

	UX	UY	UZ	RX	RY	RZ
TOTAL	0.004573	0.004573	0.004573	.000000	.000000	.000000

T O T A L A C C E L E R A T E D M A S S A N D L O C A T I O N

TOTAL MASS ACTIVATED BY ACCELERATION LOADS, IN GLOBAL COORDINATES

	UX	UY	UZ
MASS	0.004513	0.004513	0.004513
X-LOC	1006.060	1006.060	1006.060
Y-LOC	-219.449106	-219.449106	-219.449106
Z-LOC	-58.907267	-58.907267	-58.907267

Program SAP2000 Nonlinear Version 7.40 File:BW Seismic & 2.0K.OUT
Page
3

G L O B A L F O R C E B A L A N C E

TOTAL FORCE AND MOMENT AT THE ORIGIN, IN GLOBAL COORDINATES

LOAD LOAD1 ----------

	FX	FY	FZ	MX	MY	MZ
APPLIED	9.82E-34	1.11E-16	-1.762737	388.618016	1774.336	7.67E-13
SPRINGS	-0.026600	-2.840508	1.668823	-512.961956	-1676.562	-3145.051
REACTNS	0.026600	2.840508	0.093914	124.343940	-97.773843	3145.051
TOTAL	2.23E-14	-1.83E-13	5.66E-15	-8.23E-12	-2.53E-12	-2.36E-11

LOAD LOAD2 ----------

	FX	FY	FZ	MX	MY	MZ
APPLIED	9.82E-34	9.44E-16	-1.762737	388.618016	1774.336	-6.35E-13
SPRINGS	-0.009920	-1.476953	1.682920	-444.312991	-1691.050	-1634.182
REACTNS	0.009920	1.476953	0.079816	55.694975	-83.286563	1634.182
TOTAL	1.72E-16	1.38E-14	1.49E-14	-3.83E-12	-1.71E-11	6.41E-11

SAP2000 v7.40 File: BW SEISMIC & 2.0K Kip-in Units PAGE 1
12/21/07 10:10:50

Sargent & Lundy LLC

S T A T I C L O A D C A S E S

STATIC CASE	CASE TYPE	SELF WT FACTOR
LOAD1	DEAD	1.0000
LOAD2	DEAD	1.0000

SAP2000 v7.40 File: BW SEISMIC & 2.0K Kip-in Units PAGE 2
12/21/07 10:10:50

Sargent & Lundy LLC

J O I N T D A T A

JOINT	GLOBAL-X	GLOBAL-Y	GLOBAL-Z	RESTRAINTS	ANGLE-A	ANGLE-B	ANGLE-C
54	0.00000	13.38000	-42.00000	0 0 0 0 0 0	0.000	0.000	0.000
55	0.00000	154.85000	-42.00000	0 0 0 0 0 0	0.000	0.000	0.000
56	360.48000	154.85000	-42.00000	0 0 0 0 0 0	0.000	0.000	0.000
57	360.48000	91.85000	-42.00000	0 0 0 0 0 0	0.000	0.000	0.000
58	360.48000	70.85000	-63.00000	0 0 0 0 0 0	0.000	0.000	0.000
59	360.48000	-319.15000	-63.00000	0 0 0 0 0 0	0.000	0.000	0.000
60	2142.48000	-319.15000	-63.00000	0 0 0 0 0 0	0.000	0.000	0.000
61	2142.48000	-594.30000	-63.00000	0 0 0 0 0 0	0.000	0.000	0.000
54A	0.00000	0.00000	-42.00000	1 1 1 1 1 1	0.000	0.000	0.000
61A	2142.48000	-607.05000	-63.00000	1 1 1 1 1 1	0.000	0.000	0.000
545501	0.00000	47.25000	-42.00000	0 0 0 0 0 0	90.000	0.000	0.000
545502	0.00000	56.25000	-42.00000	0 0 0 0 0 0	90.000	0.000	0.000
545503	0.00000	101.25000	-42.00000	0 0 0 0 0 0	90.000	0.000	0.000
545504	0.00000	127.85000	-42.00000	0 0 0 0 0 0	90.000	0.000	0.000

545505	0.00000	136.85000	-42.00000	0	0	0	0	0	0	90.000	0.000	0.000
545506	0.00000	145.85000	-42.00000	0	0	0	0	0	0	90.000	0.000	0.000
555601	9.00000	154.85000	-42.00000	0	0	0	0	0	0	0.000	0.000	0.000
555602	18.00000	154.85000	-42.00000	0	0	0	0	0	0	0.000	0.000	0.000
555603	27.00000	154.85000	-42.00000	0	0	0	0	0	0	0.000	0.000	0.000
555604	72.00000	154.85000	-42.00000	0	0	0	0	0	0	0.000	0.000	0.000
555605	117.00000	154.85000	-42.00000	0	0	0	0	0	0	0.000	0.000	0.000
555606	162.00000	154.85000	-42.00000	0	0	0	0	0	0	0.000	0.000	0.000
555607	207.00000	154.85000	-42.00000	0	0	0	0	0	0	0.000	0.000	0.000
555608	252.00000	154.85000	-42.00000	0	0	0	0	0	0	0.000	0.000	0.000
555609	297.00000	154.85000	-42.00000	0	0	0	0	0	0	0.000	0.000	0.000
555610	333.48000	154.85000	-42.00000	0	0	0	0	0	0	0.000	0.000	0.000
555611	342.48000	154.85000	-42.00000	0	0	0	0	0	0	0.000	0.000	0.000
555612	351.48000	154.85000	-42.00000	0	0	0	0	0	0	0.000	0.000	0.000
565701	360.48000	145.85000	-42.00000	0	0	0	0	0	0	-90.000	0.000	0.000
565702	360.48000	136.85000	-42.00000	0	0	0	0	0	0	-90.000	0.000	0.000
565703	360.48000	127.85000	-42.00000	0	0	0	0	0	0	-90.000	0.000	0.000
565704	360.48000	118.85000	-42.00000	0	0	0	0	0	0	-90.000	0.000	0.000
565705	360.48000	109.85000	-42.00000	0	0	0	0	0	0	-90.000	0.000	0.000
565706	360.48000	100.85000	-42.00000	0	0	0	0	0	0	-90.000	0.000	0.000
575801	360.48000	85.49000	-48.36000	0	0	0	0	0	0	-90.000	45.000	0.000
575802	360.48000	79.13000	-54.73000	0	0	0	0	0	0	-90.000	45.000	0.000
575803	360.48000	72.76000	-61.09000	0	0	0	0	0	0	-90.000	45.000	0.000
585901	360.48000	61.85000	-63.00000	0	0	0	0	0	0	-90.000	0.000	0.000
585902	360.48000	52.85000	-63.00000	0	0	0	0	0	0	-90.000	0.000	0.000
585903	360.48000	43.85000	-63.00000	0	0	0	0	0	0	-90.000	0.000	0.000
585904	360.48000	-1.15000	-63.00000	0	0	0	0	0	0	-90.000	0.000	0.000
585905	360.48000	-46.15000	-63.00000	0	0	0	0	0	0	-90.000	0.000	0.000
585906	360.48000	-91.15000	-63.00000	0	0	0	0	0	0	-90.000	0.000	0.000
585907	360.48000	-136.15000	-63.00000	0	0	0	0	0	0	-90.000	0.000	0.000
585908	360.48000	-181.15000	-63.00000	0	0	0	0	0	0	-90.000	0.000	0.000
585909	360.48000	-226.15000	-63.00000	0	0	0	0	0	0	-90.000	0.000	0.000
585910	360.48000	-271.15000	-63.00000	0	0	0	0	0	0	-90.000	0.000	0.000
585911	360.48000	-292.15000	-63.00000	0	0	0	0	0	0	-90.000	0.000	0.000
585912	360.48000	-301.15000	-63.00000	0	0	0	0	0	0	-90.000	0.000	0.000
585913	360.48000	-310.15000	-63.00000	0	0	0	0	0	0	-90.000	0.000	0.000
596001	369.48000	-319.15000	-63.00000	0	0	0	0	0	0	0.000	0.000	0.000
596002	378.48000	-319.15000	-63.00000	0	0	0	0	0	0	0.000	0.000	0.000
596003	387.48000	-319.15000	-63.00000	0	0	0	0	0	0	0.000	0.000	0.000
596004	432.48000	-319.15000	-63.00000	0	0	0	0	0	0	0.000	0.000	0.000
596005	477.48000	-319.15000	-63.00000	0	0	0	0	0	0	0.000	0.000	0.000
596006	522.48000	-319.15000	-63.00000	0	0	0	0	0	0	0.000	0.000	0.000
596007	567.48000	-319.15000	-63.00000	0	0	0	0	0	0	0.000	0.000	0.000
596008	612.48000	-319.15000	-63.00000	0	0	0	0	0	0	0.000	0.000	0.000
596009	657.48000	-319.15000	-63.00000	0	0	0	0	0	0	0.000	0.000	0.000
596010	702.48000	-319.15000	-63.00000	0	0	0	0	0	0	0.000	0.000	0.000
596011	747.48000	-319.15000	-63.00000	0	0	0	0	0	0	0.000	0.000	0.000
596012	792.48000	-319.15000	-63.00000	0	0	0	0	0	0	0.000	0.000	0.000
596013	837.48000	-319.15000	-63.00000	0	0	0	0	0	0	0.000	0.000	0.000
596014	882.48000	-319.15000	-63.00000	0	0	0	0	0	0	0.000	0.000	0.000
596015	927.48000	-319.15000	-63.00000	0	0	0	0	0	0	0.000	0.000	0.000
596016	972.48000	-319.15000	-63.00000	0	0	0	0	0	0	0.000	0.000	0.000
596017	1017.48000	-319.15000	-63.00000	0	0	0	0	0	0	0.000	0.000	0.000
596018	1062.48000	-319.15000	-63.00000	0	0	0	0	0	0	0.000	0.000	0.000
596019	1107.48000	-319.15000	-63.00000	0	0	0	0	0	0	0.000	0.000	0.000
596020	1152.48000	-319.15000	-63.00000	0	0	0	0	0	0	0.000	0.000	0.000
596021	1197.48000	-319.15000	-63.00000	0	0	0	0	0	0	0.000	0.000	0.000
596022	1242.48000	-319.15000	-63.00000	0	0	0	0	0	0	0.000	0.000	0.000
596023	1287.48000	-319.15000	-63.00000	0	0	0	0	0	0	0.000	0.000	0.000
596024	1332.48000	-319.15000	-63.00000	0	0	0	0	0	0	0.000	0.000	0.000
596025	1377.48000	-319.15000	-63.00000	0	0	0	0	0	0	0.000	0.000	0.000
596026	1422.48000	-319.15000	-63.00000	0	0	0	0	0	0	0.000	0.000	0.000
596027	1467.48000	-319.15000	-63.00000	0	0	0	0	0	0	0.000	0.000	0.000
596028	1512.48000	-319.15000	-63.00000	0	0	0	0	0	0	0.000	0.000	0.000
596029	1557.48000	-319.15000	-63.00000	0	0	0	0	0	0	0.000	0.000	0.000
596030	1602.48000	-319.15000	-63.00000	0	0	0	0	0	0	0.000	0.000	0.000

596031	1647.48000	-319.15000	-63.00000	0	0	0	0	0	0	0.000	0.000	0.000
596032	1692.48000	-319.15000	-63.00000	0	0	0	0	0	0	0.000	0.000	0.000
596033	1737.48000	-319.15000	-63.00000	0	0	0	0	0	0	0.000	0.000	0.000
596034	1782.48000	-319.15000	-63.00000	0	0	0	0	0	0	0.000	0.000	0.000
596035	1827.48000	-319.15000	-63.00000	0	0	0	0	0	0	0.000	0.000	0.000
596036	1872.48000	-319.15000	-63.00000	0	0	0	0	0	0	0.000	0.000	0.000
596037	1917.48000	-319.15000	-63.00000	0	0	0	0	0	0	0.000	0.000	0.000
596038	1962.48000	-319.15000	-63.00000	0	0	0	0	0	0	0.000	0.000	0.000
596039	2007.48000	-319.15000	-63.00000	0	0	0	0	0	0	0.000	0.000	0.000
596040	2052.48000	-319.15000	-63.00000	0	0	0	0	0	0	0.000	0.000	0.000
596041	2097.48000	-319.15000	-63.00000	0	0	0	0	0	0	0.000	0.000	0.000
596042	2115.48000	-319.15000	-63.00000	0	0	0	0	0	0	0.000	0.000	0.000
596043	2124.48000	-319.15000	-63.00000	0	0	0	0	0	0	0.000	0.000	0.000
596044	2133.48000	-319.15000	-63.00000	0	0	0	0	0	0	0.000	0.000	0.000
606101	2142.48000	-328.15000	-63.00000	0	0	0	0	0	0	-90.000	0.000	0.000
606102	2142.48000	-337.15000	-63.00000	0	0	0	0	0	0	-90.000	0.000	0.000
606103	2142.48000	-346.15000	-63.00000	0	0	0	0	0	0	-90.000	0.000	0.000
606104	2142.48000	-391.15000	-63.00000	0	0	0	0	0	0	-90.000	0.000	0.000
606105	2142.48000	-436.15000	-63.00000	0	0	0	0	0	0	-90.000	0.000	0.000
606106	2142.48000	-481.15000	-63.00000	0	0	0	0	0	0	-90.000	0.000	0.000
606107	2142.48000	-526.15000	-63.00000	0	0	0	0	0	0	-90.000	0.000	0.000
606108	2142.48000	-559.31000	-63.00000	0	0	0	0	0	0	-90.000	0.000	0.000
606109	2142.48000	-568.31000	-63.00000	0	0	0	0	0	0	-90.000	0.000	0.000

SAP2000 v7.40 File: BW SEISMIC & 2.0K Kip-in Units PAGE 3
12/21/07 10:10:50

Sargent & Lundy LLC

J O I N T S P R I N G D A T A

JOINT	K-U1	K-U2	K-U3	K-R1	K-R2	K-R3
545501	3.790	2.160	16.610	0.000	0.000	0.000
545502	22.750	12.970	99.670	0.000	0.000	0.000
545503	30.160	17.200	132.160	0.000	0.000	0.000
545504	15.000	8.560	65.720	0.000	0.000	0.000
545505	7.600	4.320	33.240	0.000	0.000	0.000
545506	11.360	6.480	49.840	0.000	0.000	0.000
555601	11.360	6.480	49.840	0.000	0.000	0.000
555602	7.600	4.320	33.240	0.000	0.000	0.000
555603	22.760	12.960	99.680	0.000	0.000	0.000
555604	37.910	21.620	166.120	0.000	0.000	0.000
555605	37.910	21.620	166.120	0.000	0.000	0.000
555606	37.910	21.620	166.120	0.000	0.000	0.000
555607	37.910	21.620	166.120	0.000	0.000	0.000
555608	37.910	21.620	166.120	0.000	0.000	0.000
555609	34.320	19.560	150.400	0.000	0.000	0.000
555610	19.160	10.920	83.960	0.000	0.000	0.000
555611	7.600	4.320	33.240	0.000	0.000	0.000
555612	11.360	6.480	49.840	0.000	0.000	0.000
565701	11.360	6.480	49.840	0.000	0.000	0.000
565702	7.600	4.320	33.240	0.000	0.000	0.000
565703	7.600	4.320	33.240	0.000	0.000	0.000
565704	7.600	4.320	33.240	0.000	0.000	0.000
565705	7.600	4.320	33.240	0.000	0.000	0.000
565706	11.360	6.480	49.840	0.000	0.000	0.000
575801	11.360	6.480	49.840	0.000	0.000	0.000
575802	7.600	4.320	33.240	0.000	0.000	0.000
575803	6.080	3.440	26.560	0.000	0.000	0.000
585901	11.360	6.480	49.840	0.000	0.000	0.000
585902	7.600	4.320	33.240	0.000	0.000	0.000
585903	22.760	12.960	99.680	0.000	0.000	0.000
585904	37.910	21.620	166.120	0.000	0.000	0.000
585905	37.910	21.620	166.120	0.000	0.000	0.000

585906	37.910	21.620	166.120	0.000	0.000	0.000
585907	37.910	21.620	166.120	0.000	0.000	0.000
585908	37.910	21.620	166.120	0.000	0.000	0.000
585909	37.910	21.620	166.120	0.000	0.000	0.000
585910	27.800	15.840	121.760	0.000	0.000	0.000
585911	12.640	7.200	55.320	0.000	0.000	0.000
585912	7.600	4.320	33.240	0.000	0.000	0.000
585913	11.360	6.480	49.840	0.000	0.000	0.000
596001	11.360	6.480	49.840	0.000	0.000	0.000
596002	7.600	4.320	33.240	0.000	0.000	0.000
596003	22.760	12.960	99.680	0.000	0.000	0.000
596004	37.910	21.620	166.120	0.000	0.000	0.000
596005	37.910	21.620	166.120	0.000	0.000	0.000
596006	37.910	21.620	166.120	0.000	0.000	0.000
596007	37.910	21.620	166.120	0.000	0.000	0.000
596008	37.910	21.620	166.120	0.000	0.000	0.000
596009	37.910	21.620	166.120	0.000	0.000	0.000
596010	37.910	21.620	166.120	0.000	0.000	0.000
596011	37.910	21.620	166.120	0.000	0.000	0.000
596012	37.910	21.620	166.120	0.000	0.000	0.000
596013	37.910	21.620	166.120	0.000	0.000	0.000
596014	37.910	21.620	166.120	0.000	0.000	0.000
596015	37.910	21.620	166.120	0.000	0.000	0.000
596016	37.910	21.620	166.120	0.000	0.000	0.000
596017	37.910	21.620	166.120	0.000	0.000	0.000
596018	37.910	21.620	166.120	0.000	0.000	0.000
596019	37.910	21.620	166.120	0.000	0.000	0.000
596020	37.910	21.620	166.120	0.000	0.000	0.000
596021	37.910	21.620	166.120	0.000	0.000	0.000
596022	37.910	21.620	166.120	0.000	0.000	0.000
596023	37.910	21.620	166.120	0.000	0.000	0.000
596024	37.910	21.620	166.120	0.000	0.000	0.000
596025	37.910	21.620	166.120	0.000	0.000	0.000
596026	37.910	21.620	166.120	0.000	0.000	0.000
596027	37.910	21.620	166.120	0.000	0.000	0.000
596028	37.910	21.620	166.120	0.000	0.000	0.000
596029	37.910	21.620	166.120	0.000	0.000	0.000
596030	37.910	21.620	166.120	0.000	0.000	0.000
596031	37.910	21.620	166.120	0.000	0.000	0.000
596032	37.910	21.620	166.120	0.000	0.000	0.000
596033	37.910	21.620	166.120	0.000	0.000	0.000
596034	37.910	21.620	166.120	0.000	0.000	0.000
596035	37.910	21.620	166.120	0.000	0.000	0.000
596036	37.910	21.620	166.120	0.000	0.000	0.000
596037	37.910	21.620	166.120	0.000	0.000	0.000
596038	37.910	21.620	166.120	0.000	0.000	0.000
596039	37.910	21.620	166.120	0.000	0.000	0.000
596040	37.910	21.620	166.120	0.000	0.000	0.000
596041	26.520	15.120	116.280	0.000	0.000	0.000
596042	11.360	6.480	49.840	0.000	0.000	0.000
596043	7.600	4.320	33.240	0.000	0.000	0.000
596044	11.360	6.480	49.840	0.000	0.000	0.000
606101	11.360	6.480	49.840	0.000	0.000	0.000
606102	7.600	4.320	33.240	0.000	0.000	0.000
606103	22.760	12.960	99.680	0.000	0.000	0.000
606104	37.910	21.620	166.120	0.000	0.000	0.000
606105	37.910	21.620	166.120	0.000	0.000	0.000
606106	37.910	21.620	166.120	0.000	0.000	0.000
606107	32.920	18.770	144.270	0.000	0.000	0.000
606108	21.550	12.290	94.430	0.000	0.000	0.000

F R A M E E L E M E N T D A T A

FRAME	JNT-1	JNT-2	SECTION	ANGLE	RELEASES	SEGMENTS	R1	R2	FACTOR	LENGTH
1	54A	54	SSPIPE	0.000	000000	2	0.000	0.000	0.000	13.380
2	54	545501	PIPEDR9	0.000	000000	2	0.000	0.000	0.000	33.870
3	545501	545502	PIPEDR9	0.000	000000	2	0.000	0.000	0.000	9.000
4	545502	545503	PIPEDR9	0.000	000000	2	0.000	0.000	0.000	45.000
5	545503	545504	PIPEDR9	0.000	000000	2	0.000	0.000	0.000	26.600
6	545504	545505	PIPEDR9	0.000	000000	2	0.000	0.000	0.000	9.000
7	545505	545506	PIPEDR9	0.000	000000	2	0.000	0.000	0.000	9.000
8	545506	55	PIPEDR9	0.000	000000	2	0.000	0.000	0.000	9.000
9	55	555601	PIPEDR9	0.000	000000	2	0.000	0.000	0.000	9.000
10	555601	555602	PIPEDR9	0.000	000000	2	0.000	0.000	0.000	9.000
11	555602	555603	PIPEDR9	0.000	000000	2	0.000	0.000	0.000	9.000
12	555603	555604	PIPEDR9	0.000	000000	2	0.000	0.000	0.000	45.000
13	555604	555605	PIPEDR9	0.000	000000	2	0.000	0.000	0.000	45.000
14	555605	555606	PIPEDR9	0.000	000000	2	0.000	0.000	0.000	45.000
15	555606	555607	PIPEDR9	0.000	000000	2	0.000	0.000	0.000	45.000
16	555607	555608	PIPEDR9	0.000	000000	2	0.000	0.000	0.000	45.000
17	555608	555609	PIPEDR9	0.000	000000	2	0.000	0.000	0.000	45.000
18	555609	555610	PIPEDR9	0.000	000000	2	0.000	0.000	0.000	36.480
19	555610	555611	PIPEDR9	0.000	000000	2	0.000	0.000	0.000	9.000
20	555611	555612	PIPEDR9	0.000	000000	2	0.000	0.000	0.000	9.000
21	555612	56	PIPEDR9	0.000	000000	2	0.000	0.000	0.000	9.000
22	56	565701	PIPEDR9	0.000	000000	2	0.000	0.000	0.000	9.000
23	565701	565702	PIPEDR9	0.000	000000	2	0.000	0.000	0.000	9.000
24	565702	565703	PIPEDR9	0.000	000000	2	0.000	0.000	0.000	9.000
25	565703	565704	PIPEDR9	0.000	000000	2	0.000	0.000	0.000	9.000
26	565704	565705	PIPEDR9	0.000	000000	2	0.000	0.000	0.000	9.000
27	565705	565706	PIPEDR9	0.000	000000	2	0.000	0.000	0.000	9.000
28	565706	57	PIPEDR9	0.000	000000	2	0.000	0.000	0.000	9.000
29	57	575801	PIPEDR9	0.000	000000	2	0.000	0.000	0.000	8.994
30	575801	575802	PIPEDR9	0.000	000000	2	0.000	0.000	0.000	9.001

31	575802	575803	PIPEDR9	0.000	000000	2	0.000	0.000	0.000	9.001
32	575803	58	PIPEDR9	0.000	000000	2	0.000	0.000	0.000	2.701
33	58	585901	PIPEDR9	0.000	000000	2	0.000	0.000	0.000	9.000
34	585901	585902	PIPEDR9	0.000	000000	2	0.000	0.000	0.000	9.000
35	585902	585903	PIPEDR9	0.000	000000	2	0.000	0.000	0.000	9.000
36	585903	585904	PIPEDR9	0.000	000000	2	0.000	0.000	0.000	45.000
37	585904	585905	PIPEDR9	0.000	000000	2	0.000	0.000	0.000	45.000
38	585905	585906	PIPEDR9	0.000	000000	2	0.000	0.000	0.000	45.000
39	585906	585907	PIPEDR9	0.000	000000	2	0.000	0.000	0.000	45.000
40	585907	585908	PIPEDR9	0.000	000000	2	0.000	0.000	0.000	45.000
41	585908	585909	PIPEDR9	0.000	000000	2	0.000	0.000	0.000	45.000
42	585909	585910	PIPEDR9	0.000	000000	2	0.000	0.000	0.000	45.000
43	585910	585911	PIPEDR9	0.000	000000	2	0.000	0.000	0.000	21.000
44	585911	585912	PIPEDR9	0.000	000000	2	0.000	0.000	0.000	9.000
45	585912	585913	PIPEDR9	0.000	000000	2	0.000	0.000	0.000	9.000
46	585913	59	PIPEDR9	0.000	000000	2	0.000	0.000	0.000	9.000
47	59	596001	PIPEDR9	0.000	000000	2	0.000	0.000	0.000	9.000
48	596001	596002	PIPEDR9	0.000	000000	2	0.000	0.000	0.000	9.000
49	596002	596003	PIPEDR9	0.000	000000	2	0.000	0.000	0.000	9.000
50	596003	596004	PIPEDR9	0.000	000000	2	0.000	0.000	0.000	45.000
51	596004	596005	PIPEDR9	0.000	000000	2	0.000	0.000	0.000	45.000
52	596005	596006	PIPEDR9	0.000	000000	2	0.000	0.000	0.000	45.000
53	596006	596007	PIPEDR9	0.000	000000	2	0.000	0.000	0.000	45.000
54	596007	596008	PIPEDR9	0.000	000000	2	0.000	0.000	0.000	45.000
55	596008	596009	PIPEDR9	0.000	000000	2	0.000	0.000	0.000	45.000
56	596009	596010	PIPEDR9	0.000	000000	2	0.000	0.000	0.000	45.000
57	596010	596011	PIPEDR9	0.000	000000	2	0.000	0.000	0.000	45.000
58	596011	596012	PIPEDR9	0.000	000000	2	0.000	0.000	0.000	45.000
59	596012	596013	PIPEDR9	0.000	000000	2	0.000	0.000	0.000	45.000
60	596013	596014	PIPEDR9	0.000	000000	2	0.000	0.000	0.000	45.000
61	596014	596015	PIPEDR9	0.000	000000	2	0.000	0.000	0.000	45.000
62	596015	596016	PIPEDR9	0.000	000000	2	0.000	0.000	0.000	45.000
63	596016	596017	PIPEDR9	0.000	000000	2	0.000	0.000	0.000	45.000

64	596017	596018	PIPEDR9	0.000	000000	2	0.000	0.000	0.000	45.000
65	596018	596019	PIPEDR9	0.000	000000	2	0.000	0.000	0.000	45.000
66	596019	596020	PIPEDR9	0.000	000000	2	0.000	0.000	0.000	45.000
67	596020	596021	PIPEDR9	0.000	000000	2	0.000	0.000	0.000	45.000
68	596021	596022	PIPEDR9	0.000	000000	2	0.000	0.000	0.000	45.000
69	596022	596023	PIPEDR9	0.000	000000	2	0.000	0.000	0.000	45.000
70	596023	596024	PIPEDR9	0.000	000000	2	0.000	0.000	0.000	45.000
71	596024	596025	PIPEDR9	0.000	000000	2	0.000	0.000	0.000	45.000
72	596025	596026	PIPEDR9	0.000	000000	2	0.000	0.000	0.000	45.000
73	596026	596027	PIPEDR9	0.000	000000	2	0.000	0.000	0.000	45.000
74	596027	596028	PIPEDR9	0.000	000000	2	0.000	0.000	0.000	45.000
75	596028	596029	PIPEDR9	0.000	000000	2	0.000	0.000	0.000	45.000
76	596029	596030	PIPEDR9	0.000	000000	2	0.000	0.000	0.000	45.000
77	596030	596031	PIPEDR9	0.000	000000	2	0.000	0.000	0.000	45.000
78	596031	596032	PIPEDR9	0.000	000000	2	0.000	0.000	0.000	45.000
79	596032	596033	PIPEDR9	0.000	000000	2	0.000	0.000	0.000	45.000
80	596033	596034	PIPEDR9	0.000	000000	2	0.000	0.000	0.000	45.000
81	596034	596035	PIPEDR9	0.000	000000	2	0.000	0.000	0.000	45.000
82	596035	596036	PIPEDR9	0.000	000000	2	0.000	0.000	0.000	45.000
83	596036	596037	PIPEDR9	0.000	000000	2	0.000	0.000	0.000	45.000
84	596037	596038	PIPEDR9	0.000	000000	2	0.000	0.000	0.000	45.000
85	596038	596039	PIPEDR9	0.000	000000	2	0.000	0.000	0.000	45.000
86	596039	596040	PIPEDR9	0.000	000000	2	0.000	0.000	0.000	45.000
87	596040	596041	PIPEDR9	0.000	000000	2	0.000	0.000	0.000	45.000
88	596041	596042	PIPEDR9	0.000	000000	2	0.000	0.000	0.000	18.000
89	596042	596043	PIPEDR9	0.000	000000	2	0.000	0.000	0.000	9.000
90	596043	596044	PIPEDR9	0.000	000000	2	0.000	0.000	0.000	9.000
91	596044	60	PIPEDR9	0.000	000000	2	0.000	0.000	0.000	9.000
92	60	606101	PIPEDR9	0.000	000000	2	0.000	0.000	0.000	9.000
93	606101	606102	PIPEDR9	0.000	000000	2	0.000	0.000	0.000	9.000
94	606102	606103	PIPEDR9	0.000	000000	2	0.000	0.000	0.000	9.000
95	606103	606104	PIPEDR9	0.000	000000	2	0.000	0.000	0.000	45.000
96	606104	606105	PIPEDR9	0.000	000000	2	0.000	0.000	0.000	45.000

97	606105	606106	PIPEDR9	0.000	000000	2	0.000	0.000	0.000	45.000
98	606106	606107	PIPEDR9	0.000	000000	2	0.000	0.000	0.000	45.000
99	606107	606108	PIPEDR9	0.000	000000	2	0.000	0.000	0.000	33.160
100	606108	606109	PIPEDR9	0.000	000000	2	0.000	0.000	0.000	9.000
101	606109	61	PIPEDR9	0.000	000000	2	0.000	0.000	0.000	25.990
102	61	61A	SSPIPE	0.000	000000	2	0.000	0.000	0.000	12.750

SAP2000 v7.40 File: BW SEISMIC & 2.0K Kip-in Units PAGE 5
12/21/07 10:10:50

Sargent & Lundy LLC

M A T E R I A L P R O P E R T Y D A T A

MAT LABEL	MODULUS OF ELASTICITY	POISSON'S RATIO	THERMAL COEFF	WEIGHT PER UNIT VOL	MASS PER UNIT VOL
PE	110.000	0.420	1.000E-04	8.980E-05	2.330E-07
STEEL	29000.000	0.300	6.500E-06	2.830E-04	7.324E-07
CONC	3600.000	0.200	5.500E-06	8.680E-05	2.246E-07
SSTEEL	28300.000	0.300	6.500E-06	2.830E-04	7.324E-07

SAP2000 v7.40 File: BW SEISMIC & 2.0K Kip-in Units PAGE 6
12/21/07 10:10:50

Sargent & Lundy LLC

M A T E R I A L D E S I G N D A T A

MAT LABEL	DESIGN CODE	STEEL FY	CONCRETE FC	REBAR FY	CONCRETE FCS	REBAR FYS
PE	N					
STEEL	S	36.000				
CONC	C		4.000	60.000	4.000	40.000
SSTEEL	S	36.000				

SAP2000 v7.40 File: BW SEISMIC & 2.0K Kip-in Units PAGE 7
12/21/07 10:10:50

Sargent & Lundy LLC

F R A M E S E C T I O N P R O P E R T Y D A T A

SECTION LABEL	MAT LABEL	SECTION TYPE	DEPTH	FLANGE WIDTH TOP	FLANGE THICK TOP	WEB THICK	FLANGE WIDTH BOTTOM	FLANGE THICK BOTTOM
PIPEDR9	PE		4.500	4.500	0.500	0.500	0.000	0.000
SSPIPE	SSTEEL		4.500	4.500	0.500	0.500	0.000	0.000

SAP2000 v7.40 File: BW SEISMIC & 2.0K Kip-in Units PAGE 8
12/21/07 10:10:50

Sargent & Lundy LLC

F R A M E S E C T I O N P R O P E R T Y D A T A

SECTION LABEL	AREA	TORSIONAL INERTIA	MOMENTS OF INERTIA I33	I22	SHEAR AREAS A2	A3
PIPEDR9	6.283	25.525	12.763	12.763	3.700	3.700
SSPIPE	6.283	25.525	12.763	12.763	3.700	3.700

SAP2000 v7.40 File: BW SEISMIC & 2.0K Kip-in Units PAGE 9
12/21/07 10:10:50

Sargent & Lundy LLC

F R A M E S E C T I O N P R O P E R T Y D A T A

SECTION LABEL	SECTION MODULII S33	S22	PLASTIC MODULII Z33	Z22	RADII OF GYRATION R33	R22
PIPEDR9	5.672	5.672	8.042	8.042	1.425	1.425
SSPIPE	5.672	5.672	8.042	8.042	1.425	1.425

SAP2000 v7.40 File: BW SEISMIC & 2.0K Kip-in Units PAGE 10
12/21/07 10:10:50

Sargent & Lundy LLC

F R A M E S E C T I O N P R O P E R T Y D A T A

SECTION LABEL	TOTAL WEIGHT	TOTAL MASS
PIPEDR9	1.716	4.453E-03
SSPIPE	4.646E-02	1.202E-04

SAP2000 v7.40 File: BW SEISMIC & 2.0K Kip-in Units PAGE 11
12/21/07 10:10:50

Sargent & Lundy LLC

S H E L L S E C T I O N P R O P E R T Y D A T A

SECTION LABEL	MAT LABEL	SHELL TYPE	MEMBRANE THICK	BENDING THICK	MATERIAL ANGLE
SSEC1	STEEL	4	1.000	1.000	0.000

SAP2000 v7.40 File: BW SEISMIC & 2.0K Kip-in Units PAGE 12
12/21/07 10:10:50

Sargent & Lundy LLC

S H E L L S E C T I O N P R O P E R T Y D A T A

SECTION LABEL	TOTAL WEIGHT	TOTAL MASS
SSEC1	0.000	0.000

SAP2000 v7.40 File: BW SEISMIC & 2.0K Kip-in Units PAGE 13
12/21/07 10:10:50

Sargent & Lundy LLC

J O I N T D I S P L A C E M E N T L O A D S Load Case LOAD1

JOINT	GLOBAL-X	GLOBAL-Y	GLOBAL-Z	GLOBAL-XX	GLOBAL-YY	GLOBAL-ZZ
54A	0.06700	0.07500	0.05500	0.00000	0.00000	0.00000
61A	0.06700	0.07500	0.05500	0.00000	0.00000	0.00000

SAP2000 v7.40 File: BW SEISMIC & 2.0K Kip-in Units PAGE 14
12/21/07 10:10:50

Sargent & Lundy LLC

J O I N T D I S P L A C E M E N T L O A D S Load Case LOAD2

JOINT	GLOBAL-X	GLOBAL-Y	GLOBAL-Z	GLOBAL-XX	GLOBAL-YY	GLOBAL-ZZ
54A	0.02500	0.03900	0.02600	0.00000	0.00000	0.00000
61A	0.02500	0.03900	0.02600	0.00000	0.00000	0.00000

SAP2000 v7.40 File: BW SEISMIC & 2.0K Kip-in Units PAGE 15
12/21/07 10:10:50

Sargent & Lundy LLC

F R A M E T H E R M A L L O A D S Load Case LOAD1

FRAME	TYPE	VALUE	PATTERN	MULTIPLIER
1	TEMPERATURE	7.2900		
2	TEMPERATURE	7.2900		
3	TEMPERATURE	7.2900		
4	TEMPERATURE	7.2900		
5	TEMPERATURE	7.2900		
6	TEMPERATURE	7.2900		
7	TEMPERATURE	7.2900		
8	TEMPERATURE	7.2900		
9	TEMPERATURE	7.2900		
10	TEMPERATURE	7.2900		
11	TEMPERATURE	7.2900		
12	TEMPERATURE	7.2900		
13	TEMPERATURE	7.2900		
14	TEMPERATURE	7.2900		
15	TEMPERATURE	7.2900		
16	TEMPERATURE	7.2900		
17	TEMPERATURE	7.2900		
18	TEMPERATURE	7.2900		
19	TEMPERATURE	7.2900		
20	TEMPERATURE	7.2900		
21	TEMPERATURE	7.2900		
22	TEMPERATURE	7.2900		
23	TEMPERATURE	7.2900		
24	TEMPERATURE	7.2900		
25	TEMPERATURE	7.2900		
26	TEMPERATURE	7.2900		
27	TEMPERATURE	7.2900		
28	TEMPERATURE	7.2900		
29	TEMPERATURE	7.2900		
30	TEMPERATURE	7.2900		
31	TEMPERATURE	7.2900		
32	TEMPERATURE	7.2900		
33	TEMPERATURE	7.2900		
34	TEMPERATURE	7.2900		
35	TEMPERATURE	7.2900		

36	TEMPERATURE	7.2900
37	TEMPERATURE	7.2900
38	TEMPERATURE	7.2900
39	TEMPERATURE	7.2900
40	TEMPERATURE	7.2900
41	TEMPERATURE	7.2900
42	TEMPERATURE	7.2900
43	TEMPERATURE	7.2900
44	TEMPERATURE	7.2900
45	TEMPERATURE	7.2900
46	TEMPERATURE	7.2900
47	TEMPERATURE	7.2900
48	TEMPERATURE	7.2900
49	TEMPERATURE	7.2900
50	TEMPERATURE	7.2900
51	TEMPERATURE	7.2900
52	TEMPERATURE	7.2900
53	TEMPERATURE	7.2900
54	TEMPERATURE	7.2900
55	TEMPERATURE	7.2900
56	TEMPERATURE	7.2900
57	TEMPERATURE	7.2900
58	TEMPERATURE	7.2900
59	TEMPERATURE	7.2900
60	TEMPERATURE	7.2900
61	TEMPERATURE	7.2900
62	TEMPERATURE	7.2900
63	TEMPERATURE	7.2900
64	TEMPERATURE	7.2900
65	TEMPERATURE	7.2900
66	TEMPERATURE	7.2900
67	TEMPERATURE	7.2900
68	TEMPERATURE	7.2900
69	TEMPERATURE	7.2900
70	TEMPERATURE	7.2900
71	TEMPERATURE	7.2900
72	TEMPERATURE	7.2900
73	TEMPERATURE	7.2900
74	TEMPERATURE	7.2900
75	TEMPERATURE	7.2900
76	TEMPERATURE	7.2900
77	TEMPERATURE	7.2900
78	TEMPERATURE	7.2900
79	TEMPERATURE	7.2900
80	TEMPERATURE	7.2900
81	TEMPERATURE	7.2900
82	TEMPERATURE	7.2900
83	TEMPERATURE	7.2900
84	TEMPERATURE	7.2900
85	TEMPERATURE	7.2900
86	TEMPERATURE	7.2900
87	TEMPERATURE	7.2900
88	TEMPERATURE	7.2900
89	TEMPERATURE	7.2900
90	TEMPERATURE	7.2900
91	TEMPERATURE	7.2900
92	TEMPERATURE	7.2900
93	TEMPERATURE	7.2900
94	TEMPERATURE	7.2900
95	TEMPERATURE	7.2900
96	TEMPERATURE	7.2900
97	TEMPERATURE	7.2900
98	TEMPERATURE	7.2900
99	TEMPERATURE	7.2900
100	TEMPERATURE	7.2900
101	TEMPERATURE	7.2900

102	TEMPERATURE	7.2900

SAP2000 v7.40 File: BW SEISMIC & 2.0K Kip-in Units PAGE 16
12/21/07 10:10:50

Sargent & Lundy LLC

F R A M E T H E R M A L L O A D S Load Case LOAD2

FRAME	TYPE	VALUE	PATTERN	MULTIPLIER
1	TEMPERATURE	3.7900		
2	TEMPERATURE	3.7900		
3	TEMPERATURE	3.7900		
4	TEMPERATURE	3.7900		
5	TEMPERATURE	3.7900		
6	TEMPERATURE	3.7900		
7	TEMPERATURE	3.7900		
8	TEMPERATURE	3.7900		
9	TEMPERATURE	3.7900		
10	TEMPERATURE	3.7900		
11	TEMPERATURE	3.7900		
12	TEMPERATURE	3.7900		
13	TEMPERATURE	3.7900		
14	TEMPERATURE	3.7900		
15	TEMPERATURE	3.7900		
16	TEMPERATURE	3.7900		
17	TEMPERATURE	3.7900		
18	TEMPERATURE	3.7900		
19	TEMPERATURE	3.7900		
20	TEMPERATURE	3.7900		
21	TEMPERATURE	3.7900		
22	TEMPERATURE	3.7900		
23	TEMPERATURE	3.7900		
24	TEMPERATURE	3.7900		
25	TEMPERATURE	3.7900		
26	TEMPERATURE	3.7900		
27	TEMPERATURE	3.7900		
28	TEMPERATURE	3.7900		
29	TEMPERATURE	3.7900		
30	TEMPERATURE	3.7900		
31	TEMPERATURE	3.7900		
32	TEMPERATURE	3.7900		
33	TEMPERATURE	3.7900		
34	TEMPERATURE	3.7900		
35	TEMPERATURE	3.7900		
36	TEMPERATURE	3.7900		
37	TEMPERATURE	3.7900		
38	TEMPERATURE	3.7900		
39	TEMPERATURE	3.7900		
40	TEMPERATURE	3.7900		
41	TEMPERATURE	3.7900		
42	TEMPERATURE	3.7900		
43	TEMPERATURE	3.7900		
44	TEMPERATURE	3.7900		
45	TEMPERATURE	3.7900		
46	TEMPERATURE	3.7900		
47	TEMPERATURE	3.7900		
48	TEMPERATURE	3.7900		
49	TEMPERATURE	3.7900		
50	TEMPERATURE	3.7900		
51	TEMPERATURE	3.7900		
52	TEMPERATURE	3.7900		
53	TEMPERATURE	3.7900		
54	TEMPERATURE	3.7900		

55	TEMPERATURE	3.7900
56	TEMPERATURE	3.7900
57	TEMPERATURE	3.7900
58	TEMPERATURE	3.7900
59	TEMPERATURE	3.7900
60	TEMPERATURE	3.7900
61	TEMPERATURE	3.7900
62	TEMPERATURE	3.7900
63	TEMPERATURE	3.7900
64	TEMPERATURE	3.7900
65	TEMPERATURE	3.7900
66	TEMPERATURE	3.7900
67	TEMPERATURE	3.7900
68	TEMPERATURE	3.7900
69	TEMPERATURE	3.7900
70	TEMPERATURE	3.7900
71	TEMPERATURE	3.7900
72	TEMPERATURE	3.7900
73	TEMPERATURE	3.7900
74	TEMPERATURE	3.7900
75	TEMPERATURE	3.7900
76	TEMPERATURE	3.7900
77	TEMPERATURE	3.7900
78	TEMPERATURE	3.7900
79	TEMPERATURE	3.7900
80	TEMPERATURE	3.7900
81	TEMPERATURE	3.7900
82	TEMPERATURE	3.7900
83	TEMPERATURE	3.7900
84	TEMPERATURE	3.7900
85	TEMPERATURE	3.7900
86	TEMPERATURE	3.7900
87	TEMPERATURE	3.7900
88	TEMPERATURE	3.7900
89	TEMPERATURE	3.7900
90	TEMPERATURE	3.7900
91	TEMPERATURE	3.7900
92	TEMPERATURE	3.7900
93	TEMPERATURE	3.7900
94	TEMPERATURE	3.7900
95	TEMPERATURE	3.7900
96	TEMPERATURE	3.7900
97	TEMPERATURE	3.7900
98	TEMPERATURE	3.7900
99	TEMPERATURE	3.7900
100	TEMPERATURE	3.7900
101	TEMPERATURE	3.7900
102	TEMPERATURE	3.7900

SAP2000 v7.40 File: BW SEISMIC & 2.0K Kip-in Units PAGE 1
12/21/07 10:11:31

Sargent & Lundy LLC

J O I N T D I S P L A C E M E N T S

JOINT	LOAD	U1	U2	U3	R1	R2	R3
54	LOAD1	0.0669	0.0755	0.0548	-2.112E-05	0.0000	1.323E-05
54	LOAD2	0.0250	0.0393	0.0259	-1.363E-05	0.0000	4.932E-06
55	LOAD1	-0.0191	0.0213	-1.348E-03	-1.227E-04	-1.218E-04	-9.371E-05
55	LOAD2	-9.925E-03	0.0111	-1.349E-03	-1.228E-04	-1.219E-04	-4.856E-05

56	LOAD1	0.0194	0.0178	-1.292E-03	-1.168E-04	1.141E-04	-7.437E-05
56	LOAD2	0.0101	9.236E-03	-1.286E-03	-1.162E-04	1.131E-04	-3.876E-05
57	LOAD1	1.773E-04	-7.528E-03	0.0176	-6.336E-06	4.313E-05	1.786E-05
57	LOAD2	1.310E-04	-3.924E-03	8.886E-03	0.0000	3.509E-05	1.365E-05
58	LOAD1	-4.914E-05	7.041E-03	-0.0108	3.618E-04	1.500E-05	7.957E-06
58	LOAD2	-3.626E-05	3.607E-03	-5.840E-03	1.861E-04	1.079E-05	6.055E-06
59	LOAD1	-0.0192	-0.0195	-1.352E-03	1.226E-04	-1.239E-04	1.303E-05
59	LOAD2	-9.957E-03	-0.0102	-1.353E-03	1.226E-04	-1.239E-04	6.775E-06
60	LOAD1	0.0195	0.0192	-1.348E-03	-1.241E-04	1.210E-04	-1.177E-05
60	LOAD2	0.0102	9.968E-03	-1.348E-03	-1.240E-04	1.210E-04	-6.124E-06
61	LOAD1	0.0669	0.0755	0.0549	-1.802E-05	0.0000	1.396E-05
61	LOAD2	0.0250	0.0393	0.0259	-1.178E-05	0.0000	5.209E-06
54A	LOAD1	0.0670	0.0750	0.0550	0.0000	0.0000	0.0000
54A	LOAD2	0.0250	0.0390	0.0260	0.0000	0.0000	0.0000
61A	LOAD1	0.0670	0.0750	0.0550	0.0000	0.0000	0.0000
61A	LOAD2	0.0250	0.0390	0.0260	0.0000	0.0000	0.0000
545501	LOAD1	0.0328	-9.196E-03	1.843E-03	-2.919E-05	7.666E-04	1.523E-03
545501	LOAD2	0.0170	-3.436E-03	6.881E-04	-2.921E-05	2.967E-04	5.686E-04
545502	LOAD1	0.0230	3.976E-04	-4.204E-04	-3.694E-05	3.756E-04	7.838E-04
545502	LOAD2	0.0120	1.515E-04	-3.084E-04	-3.697E-05	2.944E-04	2.941E-04
545503	LOAD1	8.472E-03	1.204E-04	-1.782E-04	-7.567E-05	-2.715E-04	-2.259E-04
545503	LOAD2	4.405E-03	3.255E-05	-1.750E-04	-7.573E-05	-2.539E-04	-9.309E-05
545504	LOAD1	9.693E-03	-7.634E-04	-1.136E-04	-9.856E-05	-1.684E-05	1.762E-04
545504	LOAD2	5.040E-03	-3.743E-04	-1.170E-04	-9.864E-05	-1.986E-05	8.711E-05
545505	LOAD1	0.0120	1.659E-03	-8.184E-05	-1.063E-04	2.290E-06	5.203E-04
545505	LOAD2	6.239E-03	8.625E-04	-7.980E-05	-1.064E-04	2.208E-06	2.692E-04
545506	LOAD1	0.0155	8.750E-03	-1.958E-04	-1.141E-04	7.112E-05	1.044E-03
545506	LOAD2	8.055E-03	4.546E-03	-1.955E-04	-1.141E-04	7.129E-05	5.431E-04
555601	LOAD1	-0.0133	9.307E-03	-1.750E-04	-1.226E-04	-8.128E-05	-1.163E-03
555601	LOAD2	-6.901E-03	4.839E-03	-1.751E-04	-1.227E-04	-8.133E-05	-6.049E-04
555602	LOAD1	-9.422E-03	1.732E-03	8.602E-05	-1.224E-04	-5.151E-06	-5.381E-04
555602	LOAD2	-4.898E-03	9.004E-04	8.605E-05	-1.225E-04	-5.152E-06	-2.798E-04
555603	LOAD1	-6.502E-03	-5.933E-04	-2.135E-04	-1.223E-04	2.304E-04	-1.731E-04
555603	LOAD2	-3.380E-03	-3.085E-04	-2.135E-04	-1.223E-04	2.304E-04	-9.001E-05
555604	LOAD1	-1.535E-03	-3.321E-05	-1.580E-04	-1.215E-04	-5.967E-05	5.454E-05
555604	LOAD2	-7.980E-04	-1.727E-05	-1.580E-04	-1.215E-04	-5.967E-05	2.836E-05
555605	LOAD1	-3.569E-04	8.770E-06	-1.515E-04	-1.208E-04	1.474E-05	-1.348E-05
555605	LOAD2	-1.855E-04	4.560E-06	-1.515E-04	-1.207E-04	1.474E-05	-7.011E-06
555606	LOAD1	-5.962E-05	-1.665E-06	-1.533E-04	-1.201E-04	-2.234E-06	3.980E-06
555606	LOAD2	-3.099E-05	0.0000	-1.533E-04	-1.198E-04	-2.234E-06	2.069E-06
555607	LOAD1	9.049E-05	-1.531E-06	-1.522E-04	-1.193E-04	-5.351E-06	-3.859E-06
555607	LOAD2	4.705E-05	0.0000	-1.522E-04	-1.190E-04	-5.351E-06	-2.006E-06
555608	LOAD1	4.640E-04	8.382E-06	-1.550E-04	-1.186E-04	2.471E-05	1.284E-05
555608	LOAD2	2.412E-04	4.357E-06	-1.550E-04	-1.182E-04	2.472E-05	6.673E-06

555609	LOAD1	1.983E-03	-4.454E-05	-1.594E-04	-1.179E-04	-9.744E-05	-5.274E-05
555609	LOAD2	1.031E-03	-2.315E-05	-1.594E-04	-1.174E-04	-9.745E-05	-2.742E-05
555610	LOAD1	6.805E-03	-5.267E-04	-1.780E-04	-1.173E-04	-1.211E-04	1.507E-04
555610	LOAD2	3.538E-03	-2.737E-04	-1.780E-04	-1.167E-04	-1.211E-04	7.835E-05
555611	LOAD1	9.693E-03	1.590E-03	-4.925E-06	-1.171E-04	2.745E-06	4.723E-04
555611	LOAD2	5.039E-03	8.267E-04	-5.166E-06	-1.165E-04	2.750E-06	2.455E-04
555612	LOAD1	0.0135	8.119E-03	-1.831E-04	-1.170E-04	7.282E-05	9.693E-04
555612	LOAD2	7.039E-03	4.220E-03	-1.830E-04	-1.164E-04	7.251E-05	5.038E-04
565701	LOAD1	-0.0119	8.439E-03	-1.918E-04	-1.039E-04	-6.745E-05	-1.072E-03
565701	LOAD2	-6.184E-03	4.387E-03	-1.920E-04	-1.020E-04	-6.688E-05	-5.572E-04
565702	LOAD1	-7.788E-03	1.392E-03	-9.267E-05	-9.381E-05	0.0000	-4.959E-04
565702	LOAD2	-4.046E-03	7.236E-04	-9.711E-05	-9.084E-05	0.0000	-2.579E-04
565703	LOAD1	-4.448E-03	-6.332E-04	-1.465E-04	-8.367E-05	1.364E-05	-9.770E-05
565703	LOAD2	-2.309E-03	-3.302E-04	-1.453E-04	-7.969E-05	8.517E-06	-5.093E-05
565704	LOAD1	-1.549E-03	-5.905E-04	-3.464E-04	-7.354E-05	3.733E-05	2.815E-05
565704	LOAD2	-8.010E-04	-3.096E-04	-2.521E-04	-6.854E-05	1.898E-05	1.452E-05
565705	LOAD1	1.198E-03	-2.250E-04	-6.788E-04	-6.340E-05	-1.087E-04	3.417E-05
565705	LOAD2	6.282E-04	-1.196E-04	-4.161E-04	-5.739E-05	-5.657E-05	1.824E-05
565706	LOAD1	4.062E-03	9.533E-06	2.317E-03	-5.327E-05	-1.114E-03	2.198E-05
565706	LOAD2	2.120E-03	1.191E-05	1.123E-03	-4.624E-05	-5.659E-04	1.372E-05
575801	LOAD1	-3.720E-03	3.863E-05	2.542E-03	-3.498E-05	1.138E-03	-1.039E-05
575801	LOAD2	-1.733E-03	2.380E-05	1.262E-03	-2.763E-05	5.824E-04	-7.770E-06
575802	LOAD1	-8.863E-04	-1.063E-05	-1.211E-03	-2.683E-05	5.004E-04	-3.844E-06
575802	LOAD2	-2.623E-04	-1.079E-05	-6.812E-04	-2.080E-05	2.623E-04	-2.603E-06
575803	LOAD1	1.821E-03	-3.625E-05	-7.228E-03	-1.868E-05	7.877E-04	-4.137E-06
575803	LOAD2	1.140E-03	-2.749E-05	-3.847E-03	-1.396E-05	4.110E-04	-2.766E-06
585901	LOAD1	-4.896E-03	-3.218E-06	-1.784E-03	-1.179E-05	-6.951E-04	2.934E-06
585901	LOAD2	-2.508E-03	-1.938E-06	-9.899E-04	-7.680E-06	-3.760E-04	2.171E-06
585902	LOAD1	-3.475E-03	5.557E-06	3.215E-04	-8.587E-06	-7.625E-05	0.0000
585902	LOAD2	-1.780E-03	4.328E-06	1.911E-04	-4.570E-06	-4.188E-05	0.0000
585903	LOAD1	-2.398E-03	2.063E-06	-1.743E-04	-5.382E-06	2.546E-04	0.0000
585903	LOAD2	-1.229E-03	1.540E-06	-1.942E-04	-1.461E-06	2.414E-04	0.0000
585904	LOAD1	-5.661E-04	0.0000	-1.585E-04	1.064E-05	-6.531E-05	0.0000
585904	LOAD2	-2.900E-04	0.0000	-1.582E-04	1.409E-05	-6.230E-05	0.0000
585905	LOAD1	-1.315E-04	0.0000	-1.514E-04	2.667E-05	1.677E-05	0.0000
585905	LOAD2	-6.737E-05	0.0000	-1.515E-04	2.963E-05	1.601E-05	0.0000
585906	LOAD1	-2.161E-05	0.0000	-1.531E-04	4.269E-05	-5.147E-06	0.0000
585906	LOAD2	-1.100E-05	0.0000	-1.531E-04	4.518E-05	-4.955E-06	0.0000
585907	LOAD1	3.497E-05	0.0000	-1.531E-04	5.871E-05	4.857E-06	0.0000
585907	LOAD2	1.824E-05	0.0000	-1.531E-04	6.073E-05	4.808E-06	0.0000
585908	LOAD1	1.779E-04	2.118E-06	-1.516E-04	7.474E-05	-1.526E-05	3.161E-06
585908	LOAD2	9.248E-05	1.101E-06	-1.516E-04	7.627E-05	-1.525E-05	1.643E-06
585909	LOAD1	7.598E-04	-9.090E-06	-1.580E-04	9.076E-05	5.925E-05	-1.303E-05
585909	LOAD2	3.950E-04	-4.726E-06	-1.580E-04	9.182E-05	5.925E-05	-6.775E-06

585910	LOAD1	3.217E-03	1.195E-04	-1.743E-04	1.068E-04	-2.308E-04	5.936E-05
585910	LOAD2	1.673E-03	6.212E-05	-1.743E-04	1.074E-04	-2.308E-04	3.086E-05
585911	LOAD1	7.081E-03	6.335E-04	-8.869E-05	1.143E-04	5.479E-06	-1.253E-04
585911	LOAD2	3.681E-03	3.294E-04	-8.869E-05	1.146E-04	5.478E-06	-6.516E-05
585912	LOAD1	9.903E-03	-1.525E-03	-9.659E-05	1.175E-04	2.914E-06	-5.027E-04
585912	LOAD2	5.148E-03	-7.929E-04	-9.657E-05	1.177E-04	2.914E-06	-2.614E-04
585913	LOAD1	0.0137	-8.558E-03	-1.989E-04	1.207E-04	7.047E-05	-1.053E-03
585913	LOAD2	7.125E-03	-4.449E-03	-1.989E-04	1.208E-04	7.049E-05	-5.476E-04
596001	LOAD1	-0.0133	-8.716E-03	-1.743E-04	1.214E-04	-8.149E-05	1.066E-03
596001	LOAD2	-6.924E-03	-4.531E-03	-1.743E-04	1.214E-04	-8.150E-05	5.540E-04
596002	LOAD1	-9.452E-03	-1.680E-03	8.635E-05	1.201E-04	-5.098E-06	5.038E-04
596002	LOAD2	-4.914E-03	-8.732E-04	8.636E-05	1.202E-04	-5.098E-06	2.619E-04
596003	LOAD1	-6.523E-03	5.381E-04	-2.135E-04	1.189E-04	2.304E-04	1.660E-04
596003	LOAD2	-3.391E-03	2.797E-04	-2.135E-04	1.189E-04	2.304E-04	8.632E-05
596004	LOAD1	-1.541E-03	3.166E-05	-1.580E-04	1.126E-04	-5.978E-05	-5.172E-05
596004	LOAD2	-8.013E-04	1.646E-05	-1.580E-04	1.127E-04	-5.978E-05	-2.689E-05
596005	LOAD1	-3.642E-04	-8.439E-06	-1.515E-04	1.064E-04	1.514E-05	1.262E-05
596005	LOAD2	-1.894E-04	-4.387E-06	-1.515E-04	1.064E-04	1.514E-05	6.563E-06
596006	LOAD1	-8.606E-05	2.055E-06	-1.532E-04	1.002E-04	-3.835E-06	-3.069E-06
596006	LOAD2	-4.474E-05	1.068E-06	-1.532E-04	1.002E-04	-3.835E-06	-1.595E-06
596007	LOAD1	-2.034E-05	0.0000	-1.528E-04	9.395E-05	0.0000	0.0000
596007	LOAD2	-1.057E-05	0.0000	-1.528E-04	9.399E-05	0.0000	0.0000
596008	LOAD1	-4.805E-06	0.0000	-1.529E-04	8.772E-05	0.0000	0.0000
596008	LOAD2	-2.498E-06	0.0000	-1.529E-04	8.776E-05	0.0000	0.0000
596009	LOAD1	-1.135E-06	0.0000	-1.528E-04	8.150E-05	0.0000	0.0000
596009	LOAD2	0.0000	0.0000	-1.528E-04	8.153E-05	0.0000	0.0000
596010	LOAD1	0.0000	0.0000	-1.528E-04	7.527E-05	0.0000	0.0000
596010	LOAD2	0.0000	0.0000	-1.528E-04	7.530E-05	0.0000	0.0000
596011	LOAD1	0.0000	0.0000	-1.528E-04	6.904E-05	0.0000	0.0000
596011	LOAD2	0.0000	0.0000	-1.528E-04	6.907E-05	0.0000	0.0000
596012	LOAD1	0.0000	0.0000	-1.528E-04	6.281E-05	0.0000	0.0000
596012	LOAD2	0.0000	0.0000	-1.528E-04	6.284E-05	0.0000	0.0000
596013	LOAD1	0.0000	0.0000	-1.528E-04	5.658E-05	0.0000	0.0000
596013	LOAD2	0.0000	0.0000	-1.528E-04	5.661E-05	0.0000	0.0000
596014	LOAD1	0.0000	0.0000	-1.528E-04	5.035E-05	0.0000	0.0000
596014	LOAD2	0.0000	0.0000	-1.528E-04	5.038E-05	0.0000	0.0000
596015	LOAD1	0.0000	0.0000	-1.528E-04	4.412E-05	0.0000	0.0000
596015	LOAD2	0.0000	0.0000	-1.528E-04	4.415E-05	0.0000	0.0000
596016	LOAD1	0.0000	0.0000	-1.528E-04	3.789E-05	0.0000	0.0000
596016	LOAD2	0.0000	0.0000	-1.528E-04	3.792E-05	0.0000	0.0000
596017	LOAD1	0.0000	0.0000	-1.528E-04	3.166E-05	0.0000	0.0000
596017	LOAD2	0.0000	0.0000	-1.528E-04	3.169E-05	0.0000	0.0000
596018	LOAD1	0.0000	0.0000	-1.528E-04	2.543E-05	0.0000	0.0000
596018	LOAD2	0.0000	0.0000	-1.528E-04	2.546E-05	0.0000	0.0000

596019	LOAD1	0.0000	0.0000	-1.528E-04	1.921E-05	0.0000	0.0000
596019	LOAD2	0.0000	0.0000	-1.528E-04	1.923E-05	0.0000	0.0000
596020	LOAD1	0.0000	0.0000	-1.528E-04	1.298E-05	0.0000	0.0000
596020	LOAD2	0.0000	0.0000	-1.528E-04	1.300E-05	0.0000	0.0000
596021	LOAD1	0.0000	0.0000	-1.528E-04	6.748E-06	0.0000	0.0000
596021	LOAD2	0.0000	0.0000	-1.528E-04	6.775E-06	0.0000	0.0000
596022	LOAD1	0.0000	0.0000	-1.528E-04	0.0000	0.0000	0.0000
596022	LOAD2	0.0000	0.0000	-1.528E-04	0.0000	0.0000	0.0000
596023	LOAD1	0.0000	0.0000	-1.528E-04	-5.710E-06	0.0000	0.0000
596023	LOAD2	0.0000	0.0000	-1.528E-04	-5.684E-06	0.0000	0.0000
596024	LOAD1	0.0000	0.0000	-1.528E-04	-1.194E-05	0.0000	0.0000
596024	LOAD2	0.0000	0.0000	-1.528E-04	-1.191E-05	0.0000	0.0000
596025	LOAD1	0.0000	0.0000	-1.528E-04	-1.817E-05	0.0000	0.0000
596025	LOAD2	0.0000	0.0000	-1.528E-04	-1.814E-05	0.0000	0.0000
596026	LOAD1	0.0000	0.0000	-1.528E-04	-2.440E-05	0.0000	0.0000
596026	LOAD2	0.0000	0.0000	-1.528E-04	-2.437E-05	0.0000	0.0000
596027	LOAD1	0.0000	0.0000	-1.528E-04	-3.063E-05	0.0000	0.0000
596027	LOAD2	0.0000	0.0000	-1.528E-04	-3.060E-05	0.0000	0.0000
596028	LOAD1	0.0000	0.0000	-1.528E-04	-3.686E-05	0.0000	0.0000
596028	LOAD2	0.0000	0.0000	-1.528E-04	-3.683E-05	0.0000	0.0000
596029	LOAD1	0.0000	0.0000	-1.528E-04	-4.308E-05	0.0000	0.0000
596029	LOAD2	0.0000	0.0000	-1.528E-04	-4.306E-05	0.0000	0.0000
596030	LOAD1	0.0000	0.0000	-1.528E-04	-4.931E-05	0.0000	0.0000
596030	LOAD2	0.0000	0.0000	-1.528E-04	-4.929E-05	0.0000	0.0000
596031	LOAD1	0.0000	0.0000	-1.528E-04	-5.554E-05	0.0000	0.0000
596031	LOAD2	0.0000	0.0000	-1.528E-04	-5.552E-05	0.0000	0.0000
596032	LOAD1	0.0000	0.0000	-1.528E-04	-6.177E-05	0.0000	0.0000
596032	LOAD2	0.0000	0.0000	-1.528E-04	-6.175E-05	0.0000	0.0000
596033	LOAD1	0.0000	0.0000	-1.528E-04	-6.800E-05	0.0000	0.0000
596033	LOAD2	0.0000	0.0000	-1.528E-04	-6.798E-05	0.0000	0.0000
596034	LOAD1	0.0000	0.0000	-1.528E-04	-7.423E-05	0.0000	0.0000
596034	LOAD2	0.0000	0.0000	-1.528E-04	-7.421E-05	0.0000	0.0000
596035	LOAD1	0.0000	0.0000	-1.528E-04	-8.046E-05	0.0000	0.0000
596035	LOAD2	0.0000	0.0000	-1.528E-04	-8.044E-05	0.0000	0.0000
596036	LOAD1	2.618E-06	0.0000	-1.529E-04	-8.669E-05	0.0000	0.0000
596036	LOAD2	1.361E-06	0.0000	-1.529E-04	-8.667E-05	0.0000	0.0000
596037	LOAD1	1.108E-05	0.0000	-1.528E-04	-9.292E-05	0.0000	0.0000
596037	LOAD2	5.759E-06	0.0000	-1.528E-04	-9.290E-05	0.0000	0.0000
596038	LOAD1	4.688E-05	0.0000	-1.532E-04	-9.915E-05	3.889E-06	0.0000
596038	LOAD2	2.437E-05	0.0000	-1.532E-04	-9.913E-05	3.889E-06	0.0000
596039	LOAD1	1.984E-04	-1.946E-06	-1.515E-04	-1.054E-04	-1.535E-05	-2.903E-06
596039	LOAD2	1.031E-04	-1.012E-06	-1.515E-04	-1.054E-04	-1.535E-05	-1.509E-06
596040	LOAD1	8.396E-04	8.533E-06	-1.581E-04	-1.116E-04	6.062E-05	1.198E-05
596040	LOAD2	4.365E-04	4.436E-06	-1.581E-04	-1.116E-04	6.062E-05	6.229E-06

596041	LOAD1	3.553E-03	-1.501E-04	-1.807E-04	-1.178E-04	-2.360E-04	-5.735E-05
596041	LOAD2	1.847E-03	-7.804E-05	-1.807E-04	-1.178E-04	-2.360E-04	-2.981E-05
596042	LOAD1	7.093E-03	-6.221E-04	-6.352E-05	-1.203E-04	1.666E-05	1.160E-04
596042	LOAD2	3.688E-03	-3.234E-04	-6.352E-05	-1.203E-04	1.666E-05	6.029E-05
596043	LOAD1	9.912E-03	1.508E-03	-1.019E-04	-1.216E-04	4.027E-06	5.023E-04
596043	LOAD2	5.153E-03	7.839E-04	-1.019E-04	-1.216E-04	4.027E-06	2.611E-04
596044	LOAD1	0.0137	8.557E-03	-2.006E-04	-1.228E-04	6.989E-05	1.056E-03
596044	LOAD2	7.129E-03	4.449E-03	-2.006E-04	-1.228E-04	6.988E-05	5.488E-04
606101	LOAD1	-0.0133	8.722E-03	-1.735E-04	-1.171E-04	-8.120E-05	-1.066E-03
606101	LOAD2	-6.935E-03	4.534E-03	-1.736E-04	-1.171E-04	-8.118E-05	-5.542E-04
606102	LOAD1	-9.479E-03	1.683E-03	8.647E-05	-1.131E-04	-5.068E-06	-5.043E-04
606102	LOAD2	-4.928E-03	8.747E-04	8.617E-05	-1.131E-04	-5.065E-06	-2.622E-04
606103	LOAD1	-6.556E-03	-5.401E-04	-2.137E-04	-1.092E-04	2.307E-04	-1.670E-04
606103	LOAD2	-3.408E-03	-2.805E-04	-2.135E-04	-1.091E-04	2.304E-04	-8.671E-05
606104	LOAD1	-1.656E-03	-2.837E-05	-1.578E-04	-8.936E-05	-6.199E-05	5.658E-05
606104	LOAD2	-8.607E-04	-1.524E-05	-1.580E-04	-8.935E-05	-5.930E-05	2.871E-05
606105	LOAD1	-8.420E-04	-5.018E-06	-1.523E-04	-6.957E-05	2.414E-05	-3.270E-05
606105	LOAD2	-4.378E-04	0.0000	-1.514E-04	-6.956E-05	1.320E-05	-1.406E-05
606106	LOAD1	-2.107E-03	5.413E-05	-1.501E-04	-4.978E-05	-3.943E-05	8.576E-05
606106	LOAD2	-1.095E-03	1.989E-05	-1.538E-04	-4.978E-05	3.837E-06	3.245E-05
606107	LOAD1	-8.571E-03	-4.130E-04	-2.027E-04	-2.999E-05	1.441E-04	-3.537E-04
606107	LOAD2	-4.457E-03	-1.540E-04	-1.775E-04	-2.999E-05	-2.744E-05	-1.321E-04
606108	LOAD1	-0.0269	1.702E-03	0.0000	-1.541E-05	-1.137E-03	1.461E-03
606108	LOAD2	-0.0140	6.350E-04	-1.005E-04	-1.541E-05	-5.052E-04	5.452E-04
606109	LOAD1	-0.0394	0.0200	0.0135	-1.145E-05	-1.752E-03	2.266E-03
606109	LOAD2	-0.0205	7.453E-03	5.425E-03	-1.145E-05	-7.521E-04	8.457E-04

SAP2000 v7.40 File: BW SEISMIC & 2.0K Kip-in Units PAGE 2
12/21/07 10:11:31

Sargent & Lundy LLC

F R A M E E L E M E N T F O R C E S

FRAME	LOAD	LOC	P	V2	V3	T	M2	M3
1	LOAD1							
		0.00	-1.38	-4.894E-02	-1.247E-02	-8.509E-04	-4.404E-01	-8.445E-01
		6.69	-1.38	-3.704E-02	-1.247E-02	-8.509E-04	-3.571E-01	-5.569E-01
		13.38	-1.38	-2.515E-02	-1.247E-02	-8.509E-04	-2.737E-01	-3.489E-01
1	LOAD2							
		0.00	-7.155E-01	-4.119E-02	-4.646E-03	-8.516E-04	-1.642E-01	-5.904E-01
		6.69	-7.155E-01	-2.929E-02	-4.646E-03	-8.516E-04	-1.331E-01	-3.546E-01
		13.38	-7.155E-01	-1.740E-02	-4.646E-03	-8.516E-04	-1.020E-01	-1.985E-01
2	LOAD1							
		0.00	-1.38	-2.515E-02	-1.247E-02	-8.509E-04	-2.737E-01	-3.489E-01
		16.94	-1.38	-1.559E-02	-1.247E-02	-8.509E-04	-6.256E-02	-3.928E-03
		33.87	-1.38	-6.036E-03	-1.247E-02	-8.509E-04	1.485E-01	1.792E-01
2	LOAD2							
		0.00	-7.155E-01	-1.740E-02	-4.646E-03	-8.516E-04	-1.020E-01	-1.985E-01
		16.94	-7.155E-01	-7.842E-03	-4.646E-03	-8.516E-04	-2.336E-02	1.524E-02

		33.87	-7.155E-01	1.714E-03	-4.646E-03	-8.516E-04	5.532E-02	6.713E-02
3	LOAD1							
		0.00	-1.25	2.458E-02	7.399E-03	-8.509E-04	1.485E-01	1.792E-01
		4.50	-1.25	2.712E-02	7.399E-03	-8.509E-04	1.152E-01	6.288E-02
		9.00	-1.25	2.966E-02	7.399E-03	-8.509E-04	8.194E-02	-6.486E-02
3	LOAD2							
		0.00	-6.509E-01	1.314E-02	2.776E-03	-8.516E-04	5.532E-02	6.713E-02
		4.50	-6.509E-01	1.568E-02	2.776E-03	-8.516E-04	4.282E-02	2.272E-03
		9.00	-6.509E-01	1.822E-02	2.776E-03	-8.516E-04	3.033E-02	-7.401E-02
4	LOAD1							
		0.00	-7.276E-01	-1.224E-02	2.242E-03	-8.509E-04	8.194E-02	-6.486E-02
		22.50	-7.276E-01	4.519E-04	2.242E-03	-8.509E-04	3.150E-02	6.780E-02
		45.00	-7.276E-01	1.315E-02	2.242E-03	-8.509E-04	-1.894E-02	-8.519E-02
4	LOAD2							
		0.00	-3.783E-01	-1.251E-02	8.111E-04	-8.516E-04	3.033E-02	-7.401E-02
		22.50	-3.783E-01	1.822E-04	8.111E-04	-8.516E-04	1.208E-02	6.471E-02
		45.00	-3.783E-01	1.288E-02	8.111E-04	-8.516E-04	-6.170E-03	-8.221E-02
5	LOAD1							
		0.00	-4.721E-01	-1.040E-02	1.712E-04	-8.509E-04	-1.894E-02	-8.519E-02
		13.30	-4.721E-01	-2.894E-03	1.712E-04	-8.509E-04	-2.122E-02	3.196E-03
		26.60	-4.721E-01	4.611E-03	1.712E-04	-8.509E-04	-2.350E-02	-8.222E-03
5	LOAD2							
		0.00	-2.455E-01	-1.025E-02	2.512E-04	-8.516E-04	-6.170E-03	-8.221E-02
		13.30	-2.455E-01	-2.751E-03	2.512E-04	-8.516E-04	-9.511E-03	4.280E-03
		26.60	-2.455E-01	4.754E-03	2.512E-04	-8.516E-04	-1.285E-02	-9.040E-03
6	LOAD1							
		0.00	-3.267E-01	-2.857E-03	6.706E-03	-8.509E-04	-2.350E-02	-8.222E-03
		4.50	-3.267E-01	-3.176E-04	6.706E-03	-8.509E-04	-5.367E-02	-1.080E-03
		9.00	-3.267E-01	2.221E-03	6.706E-03	-8.509E-04	-8.385E-02	-5.363E-03
6	LOAD2							
		0.00	-1.699E-01	-2.937E-03	3.455E-03	-8.516E-04	-1.285E-02	-9.040E-03
		4.50	-1.699E-01	-3.978E-04	3.455E-03	-8.516E-04	-2.840E-02	-1.537E-03
		9.00	-1.699E-01	2.141E-03	3.455E-03	-8.516E-04	-4.394E-02	-5.460E-03
7	LOAD1							
		0.00	-2.355E-01	-4.988E-04	-4.628E-04	-8.509E-04	-8.385E-02	-5.363E-03
		4.50	-2.355E-01	2.040E-03	-4.628E-04	-8.509E-04	-8.177E-02	-8.832E-03
		9.00	-2.355E-01	4.579E-03	-4.628E-04	-8.509E-04	-7.969E-02	-2.373E-02
7	LOAD2							
		0.00	-1.225E-01	-5.113E-04	-2.712E-04	-8.516E-04	-4.394E-02	-5.460E-03
		4.50	-1.225E-01	2.028E-03	-2.712E-04	-8.516E-04	-4.272E-02	-8.872E-03
		9.00	-1.225E-01	4.567E-03	-2.712E-04	-8.516E-04	-4.150E-02	-2.371E-02
8	LOAD1							
		0.00	-5.953E-02	-5.177E-03	-5.716E-02	-8.509E-04	-7.969E-02	-2.373E-02
		4.50	-5.953E-02	-2.638E-03	-5.716E-02	-8.509E-04	1.775E-01	-6.142E-03
		9.00	-5.953E-02	-9.896E-05	-5.716E-02	-8.509E-04	4.348E-01	1.614E-05
8	LOAD2							
		0.00	-3.095E-02	-5.175E-03	-2.973E-02	-8.516E-04	-4.150E-02	-2.371E-02
		4.50	-3.095E-02	-2.636E-03	-2.973E-02	-8.516E-04	9.229E-02	-6.133E-03
		9.00	-3.095E-02	-9.738E-05	-2.973E-02	-8.516E-04	2.261E-01	1.818E-05
9	LOAD1							
		0.00	-5.716E-02	-9.896E-05	5.953E-02	1.614E-05	4.348E-01	8.509E-04
		4.50	-5.716E-02	2.440E-03	5.953E-02	1.614E-05	1.669E-01	-4.417E-03
		9.00	-5.716E-02	4.979E-03	5.953E-02	1.614E-05	-1.010E-01	-2.111E-02
9	LOAD2							
		0.00	-2.973E-02	-9.738E-05	3.095E-02	1.818E-05	2.261E-01	8.516E-04
		4.50	-2.973E-02	2.442E-03	3.095E-02	1.818E-05	8.678E-02	-4.423E-03
		9.00	-2.973E-02	4.981E-03	3.095E-02	1.818E-05	-5.252E-02	-2.112E-02
10	LOAD1							

		0.00	-2.080E-01	-3.745E-03	-7.730E-04	1.614E-05	-1.010E-01	-2.111E-02
		4.50	-2.080E-01	-1.206E-03	-7.730E-04	1.614E-05	-9.755E-02	-9.971E-03
		9.00	-2.080E-01	1.333E-03	-7.730E-04	1.614E-05	-9.407E-02	-1.026E-02
10	LOAD2							
		0.00	-1.081E-01	-3.746E-03	-4.009E-04	1.818E-05	-5.252E-02	-2.112E-02
		4.50	-1.081E-01	-1.207E-03	-4.009E-04	1.818E-05	-5.071E-02	-9.979E-03
		9.00	-1.081E-01	1.332E-03	-4.009E-04	1.818E-05	-4.891E-02	-1.026E-02
11	LOAD1							
		0.00	-2.796E-01	4.193E-03	-8.254E-03	1.614E-05	-9.407E-02	-1.026E-02
		4.50	-2.796E-01	6.732E-03	-8.254E-03	1.614E-05	-5.693E-02	-3.484E-02
		9.00	-2.796E-01	9.271E-03	-8.254E-03	1.614E-05	-1.979E-02	-7.084E-02
11	LOAD2							
		0.00	-1.454E-01	4.192E-03	-4.291E-03	1.818E-05	-4.891E-02	-1.026E-02
		4.50	-1.454E-01	6.732E-03	-4.291E-03	1.818E-05	-2.960E-02	-3.484E-02
		9.00	-1.454E-01	9.271E-03	-4.291E-03	1.818E-05	-1.029E-02	-7.084E-02
12	LOAD1							
		0.00	-4.276E-01	-1.201E-02	-5.640E-04	1.614E-05	-1.979E-02	-7.084E-02
		22.50	-4.276E-01	6.809E-04	-5.640E-04	1.614E-05	-7.102E-03	5.666E-02
		45.00	-4.276E-01	1.338E-02	-5.640E-04	1.614E-05	5.589E-03	-1.015E-01
12	LOAD2							
		0.00	-2.223E-01	-1.201E-02	-2.933E-04	1.818E-05	-1.029E-02	-7.084E-02
		22.50	-2.223E-01	6.809E-04	-2.933E-04	1.818E-05	-3.693E-03	5.666E-02
		45.00	-2.223E-01	1.338E-02	-2.933E-04	1.818E-05	2.906E-03	-1.015E-01
13	LOAD1							
		0.00	-4.858E-01	-1.287E-02	1.541E-04	1.614E-05	5.589E-03	-1.015E-01
		22.50	-4.858E-01	-1.755E-04	1.541E-04	1.614E-05	2.122E-03	4.529E-02
		45.00	-4.858E-01	1.252E-02	1.541E-04	1.614E-05	-1.344E-03	-9.359E-02
13	LOAD2							
		0.00	-2.525E-01	-1.287E-02	8.011E-05	1.818E-05	2.906E-03	-1.015E-01
		22.50	-2.525E-01	-1.755E-04	8.011E-05	1.818E-05	1.103E-03	4.529E-02
		45.00	-2.525E-01	1.252E-02	8.011E-05	1.818E-05	-6.990E-04	-9.359E-02
14	LOAD1							
		0.00	-4.993E-01	-1.265E-02	-3.554E-05	1.614E-05	-1.344E-03	-9.359E-02
		22.50	-4.993E-01	4.883E-05	-3.554E-05	1.614E-05	-5.448E-04	4.814E-02
		45.00	-4.993E-01	1.274E-02	-3.554E-05	1.614E-05	2.548E-04	-9.578E-02
14	LOAD2							
		0.00	-2.596E-01	-1.265E-02	-1.848E-05	1.818E-05	-6.990E-04	-9.359E-02
		22.50	-2.596E-01	4.883E-05	-1.848E-05	1.818E-05	-2.833E-04	4.814E-02
		45.00	-2.596E-01	1.274E-02	-1.848E-05	1.818E-05	1.325E-04	-9.578E-02
15	LOAD1							
		0.00	-5.015E-01	-1.272E-02	0.00	1.614E-05	2.548E-04	-9.578E-02
		22.50	-5.015E-01	-2.962E-05	0.00	1.614E-05	2.446E-04	4.770E-02
		45.00	-5.015E-01	1.267E-02	0.00	1.614E-05	2.343E-04	-9.445E-02
15	LOAD2							
		0.00	-2.607E-01	-1.272E-02	0.00	1.818E-05	1.325E-04	-9.578E-02
		22.50	-2.607E-01	-2.963E-05	0.00	1.818E-05	1.271E-04	4.770E-02
		45.00	-2.607E-01	1.267E-02	0.00	1.818E-05	1.218E-04	-9.445E-02
16	LOAD1							
		0.00	-4.981E-01	-1.262E-02	3.356E-05	1.614E-05	2.343E-04	-9.445E-02
		22.50	-4.981E-01	7.563E-05	3.356E-05	1.614E-05	-5.209E-04	4.667E-02
		45.00	-4.981E-01	1.277E-02	3.356E-05	1.614E-05	-1.276E-03	-9.785E-02
16	LOAD2							
		0.00	-2.590E-01	-1.262E-02	1.745E-05	1.818E-05	1.218E-04	-9.445E-02
		22.50	-2.590E-01	7.564E-05	1.745E-05	1.818E-05	-2.708E-04	4.667E-02
		45.00	-2.590E-01	1.277E-02	1.745E-05	1.818E-05	-6.633E-04	-9.785E-02
17	LOAD1							
		0.00	-4.805E-01	-1.298E-02	-1.476E-04	1.614E-05	-1.276E-03	-9.785E-02
		22.50	-4.805E-01	-2.867E-04	-1.476E-04	1.614E-05	2.046E-03	5.142E-02
		45.00	-4.805E-01	1.241E-02	-1.476E-04	1.614E-05	5.368E-03	-8.495E-02

17	LOAD2							
		0.00	-2.498E-01	-1.298E-02	-7.675E-05	1.818E-05	-6.633E-04	-9.785E-02
		22.50	-2.498E-01	-2.867E-04	-7.675E-05	1.818E-05	1.064E-03	5.142E-02
		45.00	-2.498E-01	1.241E-02	-7.675E-05	1.818E-05	2.790E-03	-8.495E-02
18	LOAD1							
		0.00	-4.125E-01	-1.157E-02	7.236E-04	1.614E-05	5.368E-03	-8.495E-02
		18.24	-4.125E-01	-1.277E-03	7.236E-04	1.614E-05	-7.830E-03	3.220E-02
		36.48	-4.125E-01	9.015E-03	7.236E-04	1.614E-05	-2.103E-02	-3.837E-02
18	LOAD2							
		0.00	-2.144E-01	-1.157E-02	3.761E-04	1.818E-05	2.790E-03	-8.495E-02
		18.24	-2.144E-01	-1.277E-03	3.761E-04	1.818E-05	-4.070E-03	3.220E-02
		36.48	-2.144E-01	9.015E-03	3.761E-04	1.818E-05	-1.093E-02	-3.838E-02
19	LOAD1							
		0.00	-2.821E-01	-5.928E-03	6.475E-03	1.614E-05	-2.103E-02	-3.837E-02
		4.50	-2.821E-01	-3.389E-03	6.475E-03	1.614E-05	-5.016E-02	-1.741E-02
		9.00	-2.821E-01	-8.498E-04	6.475E-03	1.614E-05	-7.930E-02	-7.874E-03
19	LOAD2							
		0.00	-1.467E-01	-5.929E-03	3.365E-03	1.818E-05	-1.093E-02	-3.838E-02
		4.50	-1.467E-01	-3.390E-03	3.365E-03	1.818E-05	-2.607E-02	-1.741E-02
		9.00	-1.467E-01	-8.509E-04	3.365E-03	1.818E-05	-4.122E-02	-7.867E-03
20	LOAD1							
		0.00	-2.084E-01	-1.014E-03	-3.953E-04	1.614E-05	-7.930E-02	-7.874E-03
		4.50	-2.084E-01	1.526E-03	-3.953E-04	1.614E-05	-7.752E-02	-9.026E-03
		9.00	-2.084E-01	4.065E-03	-3.953E-04	1.614E-05	-7.574E-02	-2.160E-02
20	LOAD2							
		0.00	-1.084E-01	-1.023E-03	-2.061E-04	1.818E-05	-4.122E-02	-7.867E-03
		4.50	-1.084E-01	1.516E-03	-2.061E-04	1.818E-05	-4.029E-02	-8.978E-03
		9.00	-1.084E-01	4.055E-03	-2.061E-04	1.818E-05	-3.936E-02	-2.151E-02
21	LOAD1							
		0.00	-5.461E-02	-5.063E-03	-5.301E-02	1.614E-05	-7.574E-02	-2.160E-02
		4.50	-5.461E-02	-2.524E-03	-5.301E-02	1.614E-05	1.628E-01	-4.532E-03
		9.00	-5.461E-02	1.489E-05	-5.301E-02	1.614E-05	4.013E-01	1.113E-03
21	LOAD2							
		0.00	-2.839E-02	-5.066E-03	-2.755E-02	1.818E-05	-3.936E-02	-2.151E-02
		4.50	-2.839E-02	-2.527E-03	-2.755E-02	1.818E-05	8.463E-02	-4.432E-03
		9.00	-2.839E-02	1.242E-05	-2.755E-02	1.818E-05	2.086E-01	1.225E-03
22	LOAD1							
		0.00	-5.301E-02	1.489E-05	5.461E-02	1.113E-03	4.013E-01	-1.614E-05
		4.50	-5.301E-02	2.554E-03	5.461E-02	1.113E-03	1.556E-01	-5.796E-03
		9.00	-5.301E-02	5.093E-03	5.461E-02	1.113E-03	-9.017E-02	-2.300E-02
22	LOAD2							
		0.00	-2.755E-02	1.242E-05	2.839E-02	1.225E-03	2.086E-01	-1.818E-05
		4.50	-2.755E-02	2.551E-03	2.839E-02	1.225E-03	8.088E-02	-5.787E-03
		9.00	-2.755E-02	5.090E-03	2.839E-02	1.225E-03	-4.688E-02	-2.298E-02
23	LOAD1							
		0.00	-1.882E-01	-4.468E-03	-7.320E-05	1.113E-03	-9.017E-02	-2.300E-02
		4.50	-1.882E-01	-1.929E-03	-7.320E-05	1.113E-03	-8.984E-02	-8.607E-03
		9.00	-1.882E-01	6.098E-04	-7.320E-05	1.113E-03	-8.951E-02	-5.638E-03
23	LOAD2							
		0.00	-9.780E-02	-4.478E-03	-3.957E-05	1.225E-03	-4.688E-02	-2.298E-02
		4.50	-9.780E-02	-1.939E-03	-3.957E-05	1.225E-03	-4.670E-02	-8.541E-03
		9.00	-9.780E-02	5.996E-04	-3.957E-05	1.225E-03	-4.652E-02	-5.526E-03
24	LOAD1							
		0.00	-2.474E-01	-2.470E-03	-6.088E-03	1.113E-03	-8.951E-02	-5.638E-03
		4.50	-2.474E-01	6.857E-05	-6.088E-03	1.113E-03	-6.211E-02	-2.337E-04
		9.00	-2.474E-01	2.608E-03	-6.088E-03	1.113E-03	-3.472E-02	-6.255E-03
24	LOAD2							
		0.00	-1.286E-01	-2.628E-03	-3.165E-03	1.225E-03	-4.652E-02	-5.526E-03
		4.50	-1.286E-01	-8.934E-05	-3.165E-03	1.225E-03	-3.228E-02	5.884E-04

		9.00	-1.286E-01	2.450E-03	-3.165E-03	1.225E-03	-1.803E-02	-4.722E-03
25	LOAD1							
		0.00	-2.812E-01	-2.261E-03	-3.353E-03	1.113E-03	-3.472E-02	-6.255E-03
		4.50	-2.812E-01	2.775E-04	-3.353E-03	1.113E-03	-1.963E-02	-1.791E-03
		9.00	-2.812E-01	2.817E-03	-3.353E-03	1.113E-03	-4.545E-03	-8.753E-03
25	LOAD2							
		0.00	-1.461E-01	-2.379E-03	-1.739E-03	1.225E-03	-1.803E-02	-4.722E-03
		4.50	-1.461E-01	1.597E-04	-1.739E-03	1.225E-03	-1.021E-02	2.719E-04
		9.00	-1.461E-01	2.699E-03	-1.739E-03	1.225E-03	-2.385E-03	-6.160E-03
26	LOAD1							
		0.00	-2.929E-01	-8.698E-03	-8.015E-04	1.113E-03	-4.545E-03	-8.753E-03
		4.50	-2.929E-01	-6.159E-03	-8.015E-04	1.113E-03	-9.382E-04	2.468E-02
		9.00	-2.929E-01	-3.620E-03	-8.015E-04	1.113E-03	2.669E-03	4.668E-02
26	LOAD2							
		0.00	-1.522E-01	-5.681E-03	-4.012E-04	1.225E-03	-2.385E-03	-6.160E-03
		4.50	-1.522E-01	-3.142E-03	-4.012E-04	1.225E-03	-5.800E-04	1.369E-02
		9.00	-1.522E-01	-6.025E-04	-4.012E-04	1.225E-03	1.225E-03	2.211E-02
27	LOAD1							
		0.00	-2.838E-01	-2.618E-02	1.706E-04	1.113E-03	2.669E-03	4.668E-02
		4.50	-2.838E-01	-2.364E-02	1.706E-04	1.113E-03	1.901E-03	1.588E-01
		9.00	-2.838E-01	-2.110E-02	1.706E-04	1.113E-03	1.133E-03	2.595E-01
27	LOAD2							
		0.00	-1.474E-01	-1.444E-02	1.157E-04	1.225E-03	1.225E-03	2.211E-02
		4.50	-1.474E-01	-1.190E-02	1.157E-04	1.225E-03	7.048E-04	8.136E-02
		9.00	-1.474E-01	-9.357E-03	1.157E-04	1.225E-03	1.842E-04	1.292E-01
28	LOAD1							
		0.00	-2.377E-01	9.438E-02	1.088E-04	1.113E-03	1.133E-03	2.595E-01
		4.50	-2.377E-01	9.692E-02	1.088E-04	1.113E-03	6.433E-04	-1.709E-01
		9.00	-2.377E-01	9.946E-02	1.088E-04	1.113E-03	1.535E-04	-6.128E-01
28	LOAD2							
		0.00	-1.233E-01	4.663E-02	3.849E-05	1.225E-03	1.842E-04	1.292E-01
		4.50	-1.233E-01	4.917E-02	3.849E-05	1.225E-03	1.101E-05	-8.637E-02
		9.00	-1.233E-01	5.171E-02	3.849E-05	1.225E-03	-1.622E-04	-3.133E-01
29	LOAD1							
		0.00	-2.384E-01	-9.775E-02	1.088E-04	8.958E-04	-6.787E-04	-6.128E-01
		4.50	-2.402E-01	-9.596E-02	1.088E-04	8.958E-04	-1.168E-03	-1.772E-01
		8.99	-2.420E-01	-9.416E-02	1.088E-04	8.958E-04	-1.658E-03	2.503E-01
29	LOAD2							
		0.00	-1.238E-01	-5.065E-02	3.849E-05	7.513E-04	-9.807E-04	-3.133E-01
		4.50	-1.256E-01	-4.886E-02	3.849E-05	7.513E-04	-1.154E-03	-8.957E-02
		8.99	-1.274E-01	-4.706E-02	3.849E-05	7.513E-04	-1.327E-03	1.261E-01
30	LOAD1							
		0.00	-2.843E-01	3.233E-02	-1.415E-04	8.945E-04	-1.658E-03	2.503E-01
		4.50	-2.861E-01	3.413E-02	-1.415E-04	8.945E-04	-1.022E-03	1.007E-01
		9.00	-2.879E-01	3.592E-02	-1.415E-04	8.945E-04	-3.848E-04	-5.689E-02
30	LOAD2							
		0.00	-1.471E-01	1.573E-02	-1.157E-04	7.503E-04	-1.328E-03	1.261E-01
		4.50	-1.489E-01	1.753E-02	-1.157E-04	7.503E-04	-8.068E-04	5.127E-02
		9.00	-1.507E-01	1.932E-02	-1.157E-04	7.503E-04	-2.860E-04	-3.166E-02
31	LOAD1							
		0.00	-2.946E-01	-3.883E-03	-9.558E-05	8.951E-04	-3.834E-04	-5.689E-02
		4.50	-2.964E-01	-2.085E-03	-9.558E-05	8.951E-04	4.676E-05	-4.346E-02
		9.00	-2.982E-01	-2.884E-04	-9.558E-05	8.951E-04	4.770E-04	-3.812E-02
31	LOAD2							
		0.00	-1.526E-01	-3.081E-03	-6.911E-05	7.507E-04	-2.848E-04	-3.166E-02
		4.50	-1.544E-01	-1.284E-03	-6.911E-05	7.507E-04	2.623E-05	-2.184E-02
		9.00	-1.562E-01	5.131E-04	-6.911E-05	7.507E-04	3.373E-04	-2.010E-02
32	LOAD1							

		0.00	-2.871E-01	-1.925E-01	2.911E-05	8.955E-04	4.762E-04	-3.812E-02
		1.35	-2.876E-01	-1.920E-01	2.911E-05	8.955E-04	4.369E-04	2.215E-01
		2.70	-2.882E-01	-1.914E-01	2.911E-05	8.955E-04	3.976E-04	4.804E-01
32	LOAD2							
		0.00	-1.493E-01	-1.018E-01	2.546E-05	7.510E-04	3.367E-04	-2.010E-02
		1.35	-1.498E-01	-1.012E-01	2.546E-05	7.510E-04	3.023E-04	1.170E-01
		2.70	-1.504E-01	-1.007E-01	2.546E-05	7.510E-04	2.679E-04	2.534E-01
33	LOAD1							
		0.00	-3.391E-01	6.842E-02	2.911E-05	3.521E-04	9.144E-04	4.804E-01
		4.50	-3.391E-01	7.096E-02	2.911E-05	3.521E-04	7.834E-04	1.668E-01
		9.00	-3.391E-01	7.350E-02	2.911E-05	3.521E-04	6.524E-04	-1.583E-01
33	LOAD2							
		0.00	-1.775E-01	3.513E-02	2.546E-05	3.416E-04	7.205E-04	2.534E-01
		4.50	-1.775E-01	3.766E-02	2.546E-05	3.416E-04	6.059E-04	8.959E-02
		9.00	-1.775E-01	4.020E-02	2.546E-05	3.416E-04	4.914E-04	-8.561E-02
34	LOAD1							
		0.00	-3.947E-01	-1.541E-02	4.996E-05	3.521E-04	6.524E-04	-1.583E-01
		4.50	-3.947E-01	-1.287E-02	4.996E-05	3.521E-04	4.276E-04	-9.462E-02
		9.00	-3.947E-01	-1.033E-02	4.996E-05	3.521E-04	2.028E-04	-4.241E-02
34	LOAD2							
		0.00	-2.060E-01	-9.134E-03	3.802E-05	3.416E-04	4.914E-04	-8.561E-02
		4.50	-2.060E-01	-6.595E-03	3.802E-05	3.416E-04	3.203E-04	-5.022E-02
		9.00	-2.060E-01	-4.056E-03	3.802E-05	3.416E-04	1.492E-04	-2.625E-02
35	LOAD1							
		0.00	-4.211E-01	3.522E-04	2.595E-05	3.521E-04	2.028E-04	-4.241E-02
		4.50	-4.211E-01	2.891E-03	2.595E-05	3.521E-04	8.597E-05	-4.970E-02
		9.00	-4.211E-01	5.430E-03	2.595E-05	3.521E-04	-3.082E-05	-6.843E-02
35	LOAD2							
		0.00	-2.196E-01	2.294E-03	1.932E-05	3.416E-04	1.492E-04	-2.625E-02
		4.50	-2.196E-01	4.833E-03	1.932E-05	3.416E-04	6.229E-05	-4.229E-02
		9.00	-2.196E-01	7.372E-03	1.932E-05	3.416E-04	-2.466E-05	-6.975E-02
36	LOAD1							
		0.00	-4.757E-01	-1.195E-02	0.00	3.521E-04	-3.082E-05	-6.843E-02
		22.50	-4.757E-01	7.469E-04	0.00	3.521E-04	-1.320E-05	5.759E-02
		45.00	-4.757E-01	1.344E-02	0.00	3.521E-04	4.413E-06	-1.020E-01
36	LOAD2							
		0.00	-2.475E-01	-1.198E-02	0.00	3.416E-04	-2.466E-05	-6.975E-02
		22.50	-2.475E-01	7.105E-04	0.00	3.416E-04	-1.035E-05	5.708E-02
		45.00	-2.475E-01	1.341E-02	0.00	3.416E-04	3.948E-06	-1.017E-01
37	LOAD1							
		0.00	-4.972E-01	-1.288E-02	0.00	3.521E-04	4.413E-06	-1.020E-01
		22.50	-4.972E-01	-1.896E-04	0.00	3.521E-04	3.863E-06	4.505E-02
		45.00	-4.972E-01	1.251E-02	0.00	3.521E-04	3.312E-06	-9.351E-02
37	LOAD2							
		0.00	-2.585E-01	-1.288E-02	0.00	3.416E-04	3.948E-06	-1.017E-01
		22.50	-2.585E-01	-1.808E-04	0.00	3.416E-04	2.635E-06	4.516E-02
		45.00	-2.585E-01	1.251E-02	0.00	3.416E-04	1.322E-06	-9.359E-02
38	LOAD1							
		0.00	-5.022E-01	-1.265E-02	0.00	3.521E-04	3.312E-06	-9.351E-02
		22.50	-5.022E-01	4.540E-05	0.00	3.521E-04	-7.748E-06	4.829E-02
		45.00	-5.022E-01	1.274E-02	0.00	3.521E-04	-1.881E-05	-9.555E-02
38	LOAD2							
		0.00	-2.611E-01	-1.265E-02	0.00	3.416E-04	1.322E-06	-9.359E-02
		22.50	-2.611E-01	4.317E-05	0.00	3.416E-04	-4.179E-06	4.826E-02
		45.00	-2.611E-01	1.274E-02	0.00	3.416E-04	-9.681E-06	-9.553E-02
39	LOAD1							
		0.00	-5.030E-01	-1.270E-02	-2.166E-06	3.521E-04	-1.881E-05	-9.555E-02
		22.50	-5.030E-01	-1.134E-06	-2.166E-06	3.521E-04	2.992E-05	4.729E-02
		45.00	-5.030E-01	1.269E-02	-2.166E-06	3.521E-04	7.864E-05	-9.550E-02

39	LOAD2							
		0.00	-2.615E-01	-1.270E-02	-1.123E-06	3.416E-04	-9.681E-06	-9.553E-02
		22.50	-2.615E-01	0.00	-1.123E-06	3.416E-04	1.559E-05	4.730E-02
		45.00	-2.615E-01	1.269E-02	-1.123E-06	3.416E-04	4.086E-05	-9.551E-02
40	LOAD1							
		0.00	-5.017E-01	-1.274E-02	8.945E-06	3.521E-04	7.864E-05	-9.550E-02
		22.50	-5.017E-01	-4.063E-05	8.945E-06	3.521E-04	-1.226E-04	4.823E-02
		45.00	-5.017E-01	1.265E-02	8.945E-06	3.521E-04	-3.239E-04	-9.367E-02
40	LOAD2							
		0.00	-2.608E-01	-1.274E-02	4.650E-06	3.416E-04	4.086E-05	-9.551E-02
		22.50	-2.608E-01	-4.077E-05	4.650E-06	3.416E-04	-6.375E-05	4.823E-02
		45.00	-2.608E-01	1.265E-02	4.650E-06	3.416E-04	-1.684E-04	-9.367E-02
41	LOAD1							
		0.00	-4.949E-01	-1.252E-02	-3.685E-05	3.521E-04	-3.239E-04	-9.367E-02
		22.50	-4.949E-01	1.718E-04	-3.685E-05	3.521E-04	5.052E-04	4.528E-02
		45.00	-4.949E-01	1.287E-02	-3.685E-05	3.521E-04	1.334E-03	-1.014E-01
41	LOAD2							
		0.00	-2.573E-01	-1.252E-02	-1.916E-05	3.416E-04	-1.684E-04	-9.367E-02
		22.50	-2.573E-01	1.719E-04	-1.916E-05	3.416E-04	2.626E-04	4.528E-02
		45.00	-2.573E-01	1.287E-02	-1.916E-05	3.416E-04	6.936E-04	-1.014E-01
42	LOAD1							
		0.00	-4.661E-01	-1.337E-02	1.597E-04	3.521E-04	1.334E-03	-1.014E-01
		22.50	-4.661E-01	-6.774E-04	1.597E-04	3.521E-04	-2.258E-03	5.666E-02
		45.00	-4.661E-01	1.202E-02	1.597E-04	3.521E-04	-5.851E-03	-7.092E-02
42	LOAD2							
		0.00	-2.423E-01	-1.337E-02	8.301E-05	3.416E-04	6.936E-04	-1.014E-01
		22.50	-2.423E-01	-6.774E-04	8.301E-05	3.416E-04	-1.174E-03	5.666E-02
		45.00	-2.423E-01	1.202E-02	8.301E-05	3.416E-04	-3.042E-03	-7.092E-02
43	LOAD1							
		0.00	-3.767E-01	-9.200E-03	-1.733E-03	3.521E-04	-5.851E-03	-7.092E-02
		10.50	-3.767E-01	-3.275E-03	-1.733E-03	3.521E-04	1.235E-02	-5.429E-03
		21.00	-3.767E-01	2.649E-03	-1.733E-03	3.521E-04	3.054E-02	-2.141E-03
43	LOAD2							
		0.00	-1.958E-01	-9.200E-03	-9.010E-04	3.416E-04	-3.042E-03	-7.092E-02
		10.50	-1.958E-01	-3.275E-03	-9.010E-04	3.416E-04	6.419E-03	-5.429E-03
		21.00	-1.958E-01	2.649E-03	-9.010E-04	3.416E-04	1.588E-02	-2.141E-03
44	LOAD1							
		0.00	-2.872E-01	-2.257E-03	-6.294E-03	3.521E-04	3.054E-02	-2.141E-03
		4.50	-2.872E-01	2.816E-04	-6.294E-03	3.521E-04	5.887E-02	2.304E-03
		9.00	-2.872E-01	2.821E-03	-6.294E-03	3.521E-04	8.720E-02	-4.676E-03
44	LOAD2							
		0.00	-1.493E-01	-2.257E-03	-3.272E-03	3.416E-04	1.588E-02	-2.141E-03
		4.50	-1.493E-01	2.817E-04	-3.272E-03	3.416E-04	3.061E-02	2.304E-03
		9.00	-1.493E-01	2.821E-03	-3.272E-03	3.416E-04	4.533E-02	-4.676E-03
45	LOAD1							
		0.00	-2.119E-01	-3.898E-04	2.939E-04	3.521E-04	8.720E-02	-4.676E-03
		4.50	-2.119E-01	2.149E-03	2.939E-04	3.521E-04	8.587E-02	-8.634E-03
		9.00	-2.119E-01	4.688E-03	2.939E-04	3.521E-04	8.455E-02	-2.402E-02
45	LOAD2							
		0.00	-1.102E-01	-3.893E-04	1.528E-04	3.416E-04	4.533E-02	-4.676E-03
		4.50	-1.102E-01	2.150E-03	1.528E-04	3.416E-04	4.464E-02	-8.637E-03
		9.00	-1.102E-01	4.689E-03	1.528E-04	3.416E-04	4.396E-02	-2.402E-02
46	LOAD1							
		0.00	-5.622E-02	-5.223E-03	5.575E-02	3.521E-04	8.455E-02	-2.402E-02
		4.50	-5.622E-02	-2.684E-03	5.575E-02	3.521E-04	-1.663E-01	-6.228E-03
		9.00	-5.622E-02	-1.449E-04	5.575E-02	3.521E-04	-4.172E-01	1.369E-04
46	LOAD2							
		0.00	-2.923E-02	-5.224E-03	2.898E-02	3.416E-04	4.396E-02	-2.402E-02
		4.50	-2.923E-02	-2.684E-03	2.898E-02	3.416E-04	-8.647E-02	-6.231E-03

		9.00	-2.923E-02	-1.455E-04	2.898E-02	3.416E-04	-2.169E-01	1.369E-04
47	LOAD1							
		0.00	-5.575E-02	-1.449E-04	-5.622E-02	-1.369E-04	-4.172E-01	3.521E-04
		4.50	-5.575E-02	2.394E-03	-5.622E-02	-1.369E-04	-1.642E-01	-4.709E-03
		9.00	-5.575E-02	4.933E-03	-5.622E-02	-1.369E-04	8.879E-02	-2.120E-02
47	LOAD2							
		0.00	-2.898E-02	-1.455E-04	-2.923E-02	-1.369E-04	-2.169E-01	3.416E-04
		4.50	-2.898E-02	2.394E-03	-2.923E-02	-1.369E-04	-8.537E-02	-4.717E-03
		9.00	-2.898E-02	4.933E-03	-2.923E-02	-1.369E-04	4.616E-02	-2.120E-02
48	LOAD1							
		0.00	-2.070E-01	-3.755E-03	2.551E-04	-1.369E-04	8.879E-02	-2.120E-02
		4.50	-2.070E-01	-1.216E-03	2.551E-04	-1.369E-04	8.764E-02	-1.001E-02
		9.00	-2.070E-01	1.323E-03	2.551E-04	-1.369E-04	8.650E-02	-1.025E-02
48	LOAD2							
		0.00	-1.076E-01	-3.755E-03	1.326E-04	-1.369E-04	4.616E-02	-2.120E-02
		4.50	-1.076E-01	-1.216E-03	1.326E-04	-1.369E-04	4.557E-02	-1.001E-02
		9.00	-1.076E-01	1.323E-03	1.326E-04	-1.369E-04	4.497E-02	-1.025E-02
49	LOAD1							
		0.00	-2.789E-01	4.193E-03	7.511E-03	-1.369E-04	8.650E-02	-1.025E-02
		4.50	-2.789E-01	6.732E-03	7.511E-03	-1.369E-04	5.270E-02	-3.484E-02
		9.00	-2.789E-01	9.272E-03	7.511E-03	-1.369E-04	1.890E-02	-7.085E-02
49	LOAD2							
		0.00	-1.450E-01	4.193E-03	3.905E-03	-1.369E-04	4.497E-02	-1.025E-02
		4.50	-1.450E-01	6.732E-03	3.905E-03	-1.369E-04	2.740E-02	-3.484E-02
		9.00	-1.450E-01	9.271E-03	3.905E-03	-1.369E-04	9.823E-03	-7.085E-02
50	LOAD1							
		0.00	-4.273E-01	-1.201E-02	5.379E-04	-1.369E-04	1.890E-02	-7.085E-02
		22.50	-4.273E-01	6.806E-04	5.379E-04	-1.369E-04	6.793E-03	5.666E-02
		45.00	-4.273E-01	1.338E-02	5.379E-04	-1.369E-04	-5.309E-03	-1.015E-01
50	LOAD2							
		0.00	-2.222E-01	-1.201E-02	2.796E-04	-1.369E-04	9.823E-03	-7.085E-02
		22.50	-2.222E-01	6.806E-04	2.796E-04	-1.369E-04	3.532E-03	5.666E-02
		45.00	-2.222E-01	1.338E-02	2.796E-04	-1.369E-04	-2.760E-03	-1.015E-01
51	LOAD1							
		0.00	-4.858E-01	-1.287E-02	-1.467E-04	-1.369E-04	-5.309E-03	-1.015E-01
		22.50	-4.858E-01	-1.744E-04	-1.467E-04	-1.369E-04	-2.008E-03	4.527E-02
		45.00	-4.858E-01	1.252E-02	-1.467E-04	-1.369E-04	1.294E-03	-9.363E-02
51	LOAD2							
		0.00	-2.525E-01	-1.287E-02	-7.628E-05	-1.369E-04	-2.760E-03	-1.015E-01
		22.50	-2.525E-01	-1.744E-04	-7.628E-05	-1.369E-04	-1.044E-03	4.527E-02
		45.00	-2.525E-01	1.252E-02	-7.628E-05	-1.369E-04	6.725E-04	-9.363E-02
52	LOAD1							
		0.00	-4.996E-01	-1.265E-02	3.573E-05	-1.369E-04	1.294E-03	-9.363E-02
		22.50	-4.996E-01	4.416E-05	3.573E-05	-1.369E-04	4.896E-04	4.820E-02
		45.00	-4.996E-01	1.274E-02	3.573E-05	-1.369E-04	-3.144E-04	-9.562E-02
52	LOAD2							
		0.00	-2.597E-01	-1.265E-02	1.858E-05	-1.369E-04	6.725E-04	-9.363E-02
		22.50	-2.597E-01	4.416E-05	1.858E-05	-1.369E-04	2.545E-04	4.820E-02
		45.00	-2.597E-01	1.274E-02	1.858E-05	-1.369E-04	-1.635E-04	-9.562E-02
53	LOAD1							
		0.00	-5.028E-01	-1.271E-02	-8.685E-06	-1.369E-04	-3.144E-04	-9.562E-02
		22.50	-5.028E-01	-1.119E-05	-8.685E-06	-1.369E-04	-1.190E-04	4.746E-02
		45.00	-5.028E-01	1.268E-02	-8.685E-06	-1.369E-04	7.642E-05	-9.511E-02
53	LOAD2							
		0.00	-2.614E-01	-1.271E-02	-4.516E-06	-1.369E-04	-1.635E-04	-9.562E-02
		22.50	-2.614E-01	-1.119E-05	-4.516E-06	-1.369E-04	-6.187E-05	4.746E-02
		45.00	-2.614E-01	1.268E-02	-4.516E-06	-1.369E-04	3.973E-05	-9.511E-02
54	LOAD1							

	0.00	-5.036E-01	-1.269E-02	2.111E-06	-1.369E-04	7.642E-05	-9.511E-02
	22.50	-5.036E-01	2.833E-06	2.111E-06	-1.369E-04	2.892E-05	4.764E-02
	45.00	-5.036E-01	1.270E-02	2.111E-06	-1.369E-04	-1.858E-05	-9.524E-02
54	LOAD2						
	0.00	-2.618E-01	-1.269E-02	1.098E-06	-1.369E-04	3.973E-05	-9.511E-02
	22.50	-2.618E-01	2.833E-06	1.098E-06	-1.369E-04	1.504E-05	4.764E-02
	45.00	-2.618E-01	1.270E-02	1.098E-06	-1.369E-04	-9.657E-06	-9.524E-02
55	LOAD1						
	0.00	-5.038E-01	-1.270E-02	0.00	-1.369E-04	-1.858E-05	-9.524E-02
	22.50	-5.038E-01	0.00	0.00	-1.369E-04	-7.030E-06	4.760E-02
	45.00	-5.038E-01	1.269E-02	0.00	-1.369E-04	4.515E-06	-9.521E-02
55	LOAD2						
	0.00	-2.619E-01	-1.270E-02	0.00	-1.369E-04	-9.657E-06	-9.524E-02
	22.50	-2.619E-01	0.00	0.00	-1.369E-04	-3.655E-06	4.760E-02
	45.00	-2.619E-01	1.269E-02	0.00	-1.369E-04	2.347E-06	-9.521E-02
56	LOAD1						
	0.00	-5.038E-01	-1.269E-02	0.00	-1.369E-04	4.515E-06	-9.521E-02
	22.50	-5.038E-01	0.00	0.00	-1.369E-04	1.709E-06	4.761E-02
	45.00	-5.038E-01	1.270E-02	0.00	-1.369E-04	-1.097E-06	-9.522E-02
56	LOAD2						
	0.00	-2.619E-01	-1.269E-02	0.00	-1.369E-04	2.347E-06	-9.521E-02
	22.50	-2.619E-01	0.00	0.00	-1.369E-04	0.00	4.761E-02
	45.00	-2.619E-01	1.270E-02	0.00	-1.369E-04	0.00	-9.522E-02
57	LOAD1						
	0.00	-5.038E-01	-1.270E-02	0.00	-1.369E-04	-1.097E-06	-9.522E-02
	22.50	-5.038E-01	0.00	0.00	-1.369E-04	0.00	4.761E-02
	45.00	-5.038E-01	1.270E-02	0.00	-1.369E-04	0.00	-9.521E-02
57	LOAD2						
	0.00	-2.619E-01	-1.270E-02	0.00	-1.369E-04	0.00	-9.522E-02
	22.50	-2.619E-01	0.00	0.00	-1.369E-04	0.00	4.761E-02
	45.00	-2.619E-01	1.270E-02	0.00	-1.369E-04	0.00	-9.521E-02
58	LOAD1						
	0.00	-5.038E-01	-1.270E-02	0.00	-1.369E-04	0.00	-9.521E-02
	22.50	-5.038E-01	0.00	0.00	-1.369E-04	0.00	4.761E-02
	45.00	-5.038E-01	1.270E-02	0.00	-1.369E-04	0.00	-9.521E-02
58	LOAD2						
	0.00	-2.619E-01	-1.270E-02	0.00	-1.369E-04	0.00	-9.521E-02
	22.50	-2.619E-01	0.00	0.00	-1.369E-04	0.00	4.761E-02
	45.00	-2.619E-01	1.270E-02	0.00	-1.369E-04	0.00	-9.521E-02
59	LOAD1						
	0.00	-5.038E-01	-1.270E-02	0.00	-1.369E-04	0.00	-9.521E-02
	22.50	-5.038E-01	0.00	0.00	-1.369E-04	0.00	4.761E-02
	45.00	-5.038E-01	1.270E-02	0.00	-1.369E-04	0.00	-9.521E-02
59	LOAD2						
	0.00	-2.619E-01	-1.270E-02	0.00	-1.369E-04	0.00	-9.521E-02
	22.50	-2.619E-01	0.00	0.00	-1.369E-04	0.00	4.761E-02
	45.00	-2.619E-01	1.270E-02	0.00	-1.369E-04	0.00	-9.521E-02
60	LOAD1						
	0.00	-5.038E-01	-1.270E-02	0.00	-1.369E-04	0.00	-9.521E-02
	22.50	-5.038E-01	0.00	0.00	-1.369E-04	0.00	4.761E-02
	45.00	-5.038E-01	1.270E-02	0.00	-1.369E-04	0.00	-9.521E-02
60	LOAD2						
	0.00	-2.619E-01	-1.270E-02	0.00	-1.369E-04	0.00	-9.521E-02
	22.50	-2.619E-01	0.00	0.00	-1.369E-04	0.00	4.761E-02
	45.00	-2.619E-01	1.270E-02	0.00	-1.369E-04	0.00	-9.521E-02
61	LOAD1						
	0.00	-5.038E-01	-1.270E-02	0.00	-1.369E-04	0.00	-9.521E-02
	22.50	-5.038E-01	0.00	0.00	-1.369E-04	0.00	4.761E-02
	45.00	-5.038E-01	1.270E-02	0.00	-1.369E-04	0.00	-9.521E-02

61	LOAD2						
	0.00	-2.619E-01	-1.270E-02	0.00	-1.369E-04	0.00	-9.521E-02
	22.50	-2.619E-01	0.00	0.00	-1.369E-04	0.00	4.761E-02
	45.00	-2.619E-01	1.270E-02	0.00	-1.369E-04	0.00	-9.521E-02
62	LOAD1						
	0.00	-5.038E-01	-1.270E-02	0.00	-1.369E-04	0.00	-9.521E-02
	22.50	-5.038E-01	0.00	0.00	-1.369E-04	0.00	4.761E-02
	45.00	-5.038E-01	1.270E-02	0.00	-1.369E-04	0.00	-9.521E-02
62	LOAD2						
	0.00	-2.619E-01	-1.270E-02	0.00	-1.369E-04	0.00	-9.521E-02
	22.50	-2.619E-01	0.00	0.00	-1.369E-04	0.00	4.761E-02
	45.00	-2.619E-01	1.270E-02	0.00	-1.369E-04	0.00	-9.521E-02
63	LOAD1						
	0.00	-5.038E-01	-1.270E-02	0.00	-1.369E-04	0.00	-9.521E-02
	22.50	-5.038E-01	0.00	0.00	-1.369E-04	0.00	4.761E-02
	45.00	-5.038E-01	1.270E-02	0.00	-1.369E-04	0.00	-9.521E-02
63	LOAD2						
	0.00	-2.619E-01	-1.270E-02	0.00	-1.369E-04	0.00	-9.521E-02
	22.50	-2.619E-01	0.00	0.00	-1.369E-04	0.00	4.761E-02
	45.00	-2.619E-01	1.270E-02	0.00	-1.369E-04	0.00	-9.521E-02
64	LOAD1						
	0.00	-5.038E-01	-1.270E-02	0.00	-1.369E-04	0.00	-9.521E-02
	22.50	-5.038E-01	0.00	0.00	-1.369E-04	0.00	4.761E-02
	45.00	-5.038E-01	1.270E-02	0.00	-1.369E-04	0.00	-9.521E-02
64	LOAD2						
	0.00	-2.619E-01	-1.270E-02	0.00	-1.369E-04	0.00	-9.521E-02
	22.50	-2.619E-01	0.00	0.00	-1.369E-04	0.00	4.761E-02
	45.00	-2.619E-01	1.270E-02	0.00	-1.369E-04	0.00	-9.521E-02
65	LOAD1						
	0.00	-5.038E-01	-1.270E-02	0.00	-1.369E-04	0.00	-9.521E-02
	22.50	-5.038E-01	0.00	0.00	-1.369E-04	0.00	4.761E-02
	45.00	-5.038E-01	1.270E-02	0.00	-1.369E-04	0.00	-9.521E-02
65	LOAD2						
	0.00	-2.619E-01	-1.270E-02	0.00	-1.369E-04	0.00	-9.521E-02
	22.50	-2.619E-01	0.00	0.00	-1.369E-04	0.00	4.761E-02
	45.00	-2.619E-01	1.270E-02	0.00	-1.369E-04	0.00	-9.521E-02
66	LOAD1						
	0.00	-5.038E-01	-1.270E-02	0.00	-1.369E-04	0.00	-9.521E-02
	22.50	-5.038E-01	0.00	0.00	-1.369E-04	0.00	4.761E-02
	45.00	-5.038E-01	1.270E-02	0.00	-1.369E-04	0.00	-9.521E-02
66	LOAD2						
	0.00	-2.619E-01	-1.270E-02	0.00	-1.369E-04	0.00	-9.521E-02
	22.50	-2.619E-01	0.00	0.00	-1.369E-04	0.00	4.761E-02
	45.00	-2.619E-01	1.270E-02	0.00	-1.369E-04	0.00	-9.521E-02
67	LOAD1						
	0.00	-5.038E-01	-1.270E-02	0.00	-1.369E-04	0.00	-9.521E-02
	22.50	-5.038E-01	0.00	0.00	-1.369E-04	0.00	4.761E-02
	45.00	-5.038E-01	1.270E-02	0.00	-1.369E-04	0.00	-9.521E-02
67	LOAD2						
	0.00	-2.619E-01	-1.270E-02	0.00	-1.369E-04	0.00	-9.521E-02
	22.50	-2.619E-01	0.00	0.00	-1.369E-04	0.00	4.761E-02
	45.00	-2.619E-01	1.270E-02	0.00	-1.369E-04	0.00	-9.521E-02
68	LOAD1						
	0.00	-5.038E-01	-1.270E-02	0.00	-1.369E-04	0.00	-9.521E-02
	22.50	-5.038E-01	0.00	0.00	-1.369E-04	0.00	4.761E-02
	45.00	-5.038E-01	1.270E-02	0.00	-1.369E-04	0.00	-9.521E-02
68	LOAD2						
	0.00	-2.619E-01	-1.270E-02	0.00	-1.369E-04	0.00	-9.521E-02
	22.50	-2.619E-01	0.00	0.00	-1.369E-04	0.00	4.761E-02

	45.00	-2.619E-01	1.270E-02	0.00	-1.369E-04	0.00	-9.521E-02
69	LOAD1						
	0.00	-5.038E-01	-1.270E-02	0.00	-1.369E-04	0.00	-9.521E-02
	22.50	-5.038E-01	0.00	0.00	-1.369E-04	0.00	4.761E-02
	45.00	-5.038E-01	1.270E-02	0.00	-1.369E-04	0.00	-9.521E-02
69	LOAD2						
	0.00	-2.619E-01	-1.270E-02	0.00	-1.369E-04	0.00	-9.521E-02
	22.50	-2.619E-01	0.00	0.00	-1.369E-04	0.00	4.761E-02
	45.00	-2.619E-01	1.270E-02	0.00	-1.369E-04	0.00	-9.521E-02
70	LOAD1						
	0.00	-5.038E-01	-1.270E-02	0.00	-1.369E-04	0.00	-9.521E-02
	22.50	-5.038E-01	0.00	0.00	-1.369E-04	0.00	4.761E-02
	45.00	-5.038E-01	1.270E-02	0.00	-1.369E-04	0.00	-9.521E-02
70	LOAD2						
	0.00	-2.619E-01	-1.270E-02	0.00	-1.369E-04	0.00	-9.521E-02
	22.50	-2.619E-01	0.00	0.00	-1.369E-04	0.00	4.761E-02
	45.00	-2.619E-01	1.270E-02	0.00	-1.369E-04	0.00	-9.521E-02
71	LOAD1						
	0.00	-5.038E-01	-1.270E-02	0.00	-1.369E-04	0.00	-9.521E-02
	22.50	-5.038E-01	0.00	0.00	-1.369E-04	0.00	4.761E-02
	45.00	-5.038E-01	1.270E-02	0.00	-1.369E-04	0.00	-9.521E-02
71	LOAD2						
	0.00	-2.619E-01	-1.270E-02	0.00	-1.369E-04	0.00	-9.521E-02
	22.50	-2.619E-01	0.00	0.00	-1.369E-04	0.00	4.761E-02
	45.00	-2.619E-01	1.270E-02	0.00	-1.369E-04	0.00	-9.521E-02
72	LOAD1						
	0.00	-5.038E-01	-1.270E-02	0.00	-1.369E-04	0.00	-9.521E-02
	22.50	-5.038E-01	0.00	0.00	-1.369E-04	0.00	4.761E-02
	45.00	-5.038E-01	1.270E-02	0.00	-1.369E-04	0.00	-9.521E-02
72	LOAD2						
	0.00	-2.619E-01	-1.270E-02	0.00	-1.369E-04	0.00	-9.521E-02
	22.50	-2.619E-01	0.00	0.00	-1.369E-04	0.00	4.761E-02
	45.00	-2.619E-01	1.270E-02	0.00	-1.369E-04	0.00	-9.521E-02
73	LOAD1						
	0.00	-5.038E-01	-1.270E-02	0.00	-1.369E-04	0.00	-9.521E-02
	22.50	-5.038E-01	0.00	0.00	-1.369E-04	0.00	4.761E-02
	45.00	-5.038E-01	1.270E-02	0.00	-1.369E-04	0.00	-9.521E-02
73	LOAD2						
	0.00	-2.619E-01	-1.270E-02	0.00	-1.369E-04	0.00	-9.521E-02
	22.50	-2.619E-01	0.00	0.00	-1.369E-04	0.00	4.761E-02
	45.00	-2.619E-01	1.270E-02	0.00	-1.369E-04	0.00	-9.521E-02
74	LOAD1						
	0.00	-5.038E-01	-1.270E-02	0.00	-1.369E-04	0.00	-9.521E-02
	22.50	-5.038E-01	0.00	0.00	-1.369E-04	0.00	4.761E-02
	45.00	-5.038E-01	1.270E-02	0.00	-1.369E-04	0.00	-9.521E-02
74	LOAD2						
	0.00	-2.619E-01	-1.270E-02	0.00	-1.369E-04	0.00	-9.521E-02
	22.50	-2.619E-01	0.00	0.00	-1.369E-04	0.00	4.761E-02
	45.00	-2.619E-01	1.270E-02	0.00	-1.369E-04	0.00	-9.521E-02
75	LOAD1						
	0.00	-5.038E-01	-1.270E-02	0.00	-1.369E-04	0.00	-9.521E-02
	22.50	-5.038E-01	0.00	0.00	-1.369E-04	0.00	4.761E-02
	45.00	-5.038E-01	1.270E-02	0.00	-1.369E-04	0.00	-9.521E-02
75	LOAD2						
	0.00	-2.619E-01	-1.270E-02	0.00	-1.369E-04	0.00	-9.521E-02
	22.50	-2.619E-01	0.00	0.00	-1.369E-04	0.00	4.761E-02
	45.00	-2.619E-01	1.270E-02	0.00	-1.369E-04	0.00	-9.521E-02
76	LOAD1						

	0.00	-5.038E-01	-1.270E-02	0.00	-1.369E-04	0.00	-9.521E-02
	22.50	-5.038E-01	0.00	0.00	-1.369E-04	0.00	4.761E-02
	45.00	-5.038E-01	1.270E-02	0.00	-1.369E-04	0.00	-9.521E-02
76	LOAD2						
	0.00	-2.619E-01	-1.270E-02	0.00	-1.369E-04	0.00	-9.521E-02
	22.50	-2.619E-01	0.00	0.00	-1.369E-04	0.00	4.761E-02
	45.00	-2.619E-01	1.270E-02	0.00	-1.369E-04	0.00	-9.521E-02
77	LOAD1						
	0.00	-5.038E-01	-1.270E-02	0.00	-1.369E-04	0.00	-9.521E-02
	22.50	-5.038E-01	0.00	0.00	-1.369E-04	0.00	4.761E-02
	45.00	-5.038E-01	1.270E-02	0.00	-1.369E-04	0.00	-9.521E-02
77	LOAD2						
	0.00	-2.619E-01	-1.270E-02	0.00	-1.369E-04	0.00	-9.521E-02
	22.50	-2.619E-01	0.00	0.00	-1.369E-04	0.00	4.761E-02
	45.00	-2.619E-01	1.270E-02	0.00	-1.369E-04	0.00	-9.521E-02
78	LOAD1						
	0.00	-5.038E-01	-1.270E-02	0.00	-1.369E-04	0.00	-9.521E-02
	22.50	-5.038E-01	0.00	0.00	-1.369E-04	0.00	4.761E-02
	45.00	-5.038E-01	1.270E-02	0.00	-1.369E-04	0.00	-9.521E-02
78	LOAD2						
	0.00	-2.619E-01	-1.270E-02	0.00	-1.369E-04	0.00	-9.521E-02
	22.50	-2.619E-01	0.00	0.00	-1.369E-04	0.00	4.761E-02
	45.00	-2.619E-01	1.270E-02	0.00	-1.369E-04	0.00	-9.521E-02
79	LOAD1						
	0.00	-5.038E-01	-1.270E-02	0.00	-1.369E-04	0.00	-9.521E-02
	22.50	-5.038E-01	0.00	0.00	-1.369E-04	0.00	4.761E-02
	45.00	-5.038E-01	1.270E-02	0.00	-1.369E-04	0.00	-9.521E-02
79	LOAD2						
	0.00	-2.619E-01	-1.270E-02	0.00	-1.369E-04	0.00	-9.521E-02
	22.50	-2.619E-01	0.00	0.00	-1.369E-04	0.00	4.761E-02
	45.00	-2.619E-01	1.270E-02	0.00	-1.369E-04	0.00	-9.521E-02
80	LOAD1						
	0.00	-5.038E-01	-1.270E-02	0.00	-1.369E-04	0.00	-9.521E-02
	22.50	-5.038E-01	0.00	0.00	-1.369E-04	0.00	4.761E-02
	45.00	-5.038E-01	1.270E-02	0.00	-1.369E-04	0.00	-9.522E-02
80	LOAD2						
	0.00	-2.619E-01	-1.270E-02	0.00	-1.369E-04	0.00	-9.521E-02
	22.50	-2.619E-01	0.00	0.00	-1.369E-04	0.00	4.761E-02
	45.00	-2.619E-01	1.270E-02	0.00	-1.369E-04	0.00	-9.522E-02
81	LOAD1						
	0.00	-5.038E-01	-1.270E-02	0.00	-1.369E-04	0.00	-9.522E-02
	22.50	-5.038E-01	0.00	0.00	-1.369E-04	0.00	4.761E-02
	45.00	-5.038E-01	1.269E-02	0.00	-1.369E-04	1.038E-06	-9.521E-02
81	LOAD2						
	0.00	-2.619E-01	-1.270E-02	0.00	-1.369E-04	0.00	-9.522E-02
	22.50	-2.619E-01	0.00	0.00	-1.369E-04	0.00	4.761E-02
	45.00	-2.619E-01	1.269E-02	0.00	-1.369E-04	0.00	-9.521E-02
82	LOAD1						
	0.00	-5.038E-01	-1.269E-02	0.00	-1.369E-04	1.038E-06	-9.521E-02
	22.50	-5.038E-01	0.00	0.00	-1.369E-04	-1.617E-06	4.760E-02
	45.00	-5.038E-01	1.270E-02	0.00	-1.369E-04	-4.271E-06	-9.524E-02
82	LOAD2						
	0.00	-2.619E-01	-1.269E-02	0.00	-1.369E-04	0.00	-9.521E-02
	22.50	-2.619E-01	0.00	0.00	-1.369E-04	0.00	4.760E-02
	45.00	-2.619E-01	1.270E-02	0.00	-1.369E-04	-2.221E-06	-9.524E-02
83	LOAD1						
	0.00	-5.037E-01	-1.270E-02	0.00	-1.369E-04	-4.271E-06	-9.524E-02
	22.50	-5.037E-01	-2.873E-06	0.00	-1.369E-04	6.651E-06	4.765E-02
	45.00	-5.037E-01	1.269E-02	0.00	-1.369E-04	1.757E-05	-9.511E-02

83	LOAD2						
	0.00	-2.619E-01	-1.270E-02	0.00	-1.369E-04	-2.221E-06	-9.524E-02
	22.50	-2.619E-01	-2.873E-06	0.00	-1.369E-04	3.458E-06	4.765E-02
	45.00	-2.619E-01	1.269E-02	0.00	-1.369E-04	9.136E-06	-9.511E-02
84	LOAD1						
	0.00	-5.033E-01	-1.268E-02	1.997E-06	-1.369E-04	1.757E-05	-9.511E-02
	22.50	-5.033E-01	1.134E-05	1.997E-06	-1.369E-04	-2.736E-05	4.745E-02
	45.00	-5.033E-01	1.271E-02	1.997E-06	-1.369E-04	-7.230E-05	-9.562E-02
84	LOAD2						
	0.00	-2.617E-01	-1.268E-02	1.038E-06	-1.369E-04	9.136E-06	-9.511E-02
	22.50	-2.617E-01	1.134E-05	1.038E-06	-1.369E-04	-1.423E-05	4.745E-02
	45.00	-2.617E-01	1.271E-02	1.038E-06	-1.369E-04	-3.759E-05	-9.562E-02
85	LOAD1						
	0.00	-5.015E-01	-1.274E-02	-8.218E-06	-1.369E-04	-7.230E-05	-9.562E-02
	22.50	-5.015E-01	-4.478E-05	-8.218E-06	-1.369E-04	1.126E-04	4.821E-02
	45.00	-5.015E-01	1.265E-02	-8.218E-06	-1.369E-04	2.975E-04	-9.361E-02
85	LOAD2						
	0.00	-2.607E-01	-1.274E-02	-4.272E-06	-1.369E-04	-3.759E-05	-9.562E-02
	22.50	-2.607E-01	-4.478E-05	-4.272E-06	-1.369E-04	5.854E-05	4.821E-02
	45.00	-2.607E-01	1.265E-02	-4.272E-06	-1.369E-04	1.547E-04	-9.361E-02
86	LOAD1						
	0.00	-4.940E-01	-1.252E-02	3.386E-05	-1.369E-04	2.975E-04	-9.361E-02
	22.50	-4.940E-01	1.768E-04	3.386E-05	-1.369E-04	-4.644E-04	4.524E-02
	45.00	-4.940E-01	1.287E-02	3.386E-05	-1.369E-04	-1.226E-03	-1.016E-01
86	LOAD2						
	0.00	-2.568E-01	-1.252E-02	1.760E-05	-1.369E-04	1.547E-04	-9.361E-02
	22.50	-2.568E-01	1.768E-04	1.760E-05	-1.369E-04	-2.414E-04	4.524E-02
	45.00	-2.568E-01	1.287E-02	1.760E-05	-1.369E-04	-6.375E-04	-1.016E-01
87	LOAD1						
	0.00	-4.622E-01	-1.339E-02	-1.506E-04	-1.369E-04	-1.226E-03	-1.016E-01
	22.50	-4.622E-01	-6.934E-04	-1.506E-04	-1.369E-04	2.163E-03	5.686E-02
	45.00	-4.622E-01	1.200E-02	-1.506E-04	-1.369E-04	5.552E-03	-7.036E-02
87	LOAD2						
	0.00	-2.403E-01	-1.339E-02	-7.831E-05	-1.369E-04	-6.375E-04	-1.016E-01
	22.50	-2.403E-01	-6.934E-04	-7.831E-05	-1.369E-04	1.124E-03	5.686E-02
	45.00	-2.403E-01	1.200E-02	-7.831E-05	-1.369E-04	2.886E-03	-7.036E-02
88	LOAD1						
	0.00	-3.679E-01	-9.014E-03	2.119E-03	-1.369E-04	5.552E-03	-7.036E-02
	9.00	-3.679E-01	-3.936E-03	2.119E-03	-1.369E-04	-1.352E-02	-1.209E-02
	18.00	-3.679E-01	1.142E-03	2.119E-03	-1.369E-04	-3.259E-02	4.814E-04
88	LOAD2						
	0.00	-1.913E-01	-9.014E-03	1.102E-03	-1.369E-04	2.886E-03	-7.036E-02
	9.00	-1.913E-01	-3.936E-03	1.102E-03	-1.369E-04	-7.028E-03	-1.209E-02
	18.00	-1.913E-01	1.142E-03	1.102E-03	-1.369E-04	-1.694E-02	4.813E-04
89	LOAD1						
	0.00	-2.874E-01	-2.024E-03	6.150E-03	-1.369E-04	-3.259E-02	4.814E-04
	4.50	-2.874E-01	5.155E-04	6.150E-03	-1.369E-04	-6.026E-02	3.875E-03
	9.00	-2.874E-01	3.055E-03	6.150E-03	-1.369E-04	-8.794E-02	-4.158E-03
89	LOAD2						
	0.00	-1.494E-01	-2.024E-03	3.197E-03	-1.369E-04	-1.694E-02	4.813E-04
	4.50	-1.494E-01	5.154E-04	3.197E-03	-1.369E-04	-3.133E-02	3.875E-03
	9.00	-1.494E-01	3.054E-03	3.197E-03	-1.369E-04	-4.572E-02	-4.158E-03
90	LOAD1						
	0.00	-2.120E-01	-3.336E-04	-3.638E-04	-1.369E-04	-8.794E-02	-4.158E-03
	4.50	-2.120E-01	2.205E-03	-3.638E-04	-1.369E-04	-8.630E-02	-8.369E-03
	9.00	-2.120E-01	4.744E-03	-3.638E-04	-1.369E-04	-8.466E-02	-2.401E-02
90	LOAD2						
	0.00	-1.102E-01	-3.339E-04	-1.892E-04	-1.369E-04	-4.572E-02	-4.158E-03
	4.50	-1.102E-01	2.205E-03	-1.892E-04	-1.369E-04	-4.487E-02	-8.368E-03

	9.00	-1.102E-01	4.744E-03	-1.892E-04	-1.369E-04	-4.401E-02	-2.400E-02
91 LOAD1							
	0.00	-5.627E-02	-5.255E-03	-5.581E-02	-1.369E-04	-8.466E-02	-2.401E-02
	4.50	-5.627E-02	-2.716E-03	-5.581E-02	-1.369E-04	1.665E-01	-6.073E-03
	9.00	-5.627E-02	-1.767E-04	-5.581E-02	-1.369E-04	4.176E-01	4.348E-04
91 LOAD2							
	0.00	-2.925E-02	-5.254E-03	-2.902E-02	-1.369E-04	-4.401E-02	-2.400E-02
	4.50	-2.925E-02	-2.715E-03	-2.902E-02	-1.369E-04	8.656E-02	-6.072E-03
	9.00	-2.925E-02	-1.764E-04	-2.902E-02	-1.369E-04	2.171E-01	4.348E-04
92 LOAD1							
	0.00	-5.581E-02	-1.767E-04	5.627E-02	4.348E-04	4.176E-01	1.369E-04
	4.50	-5.581E-02	2.362E-03	5.627E-02	4.348E-04	1.644E-01	-4.781E-03
	9.00	-5.581E-02	4.901E-03	5.627E-02	4.348E-04	-8.875E-02	-2.112E-02
92 LOAD2							
	0.00	-2.902E-02	-1.764E-04	2.925E-02	4.348E-04	2.171E-01	1.369E-04
	4.50	-2.902E-02	2.363E-03	2.925E-02	4.348E-04	8.549E-02	-4.782E-03
	9.00	-2.902E-02	4.902E-03	2.925E-02	4.348E-04	-4.614E-02	-2.113E-02
93 LOAD1							
	0.00	-2.073E-01	-3.748E-03	-2.537E-04	4.348E-04	-8.875E-02	-2.112E-02
	4.50	-2.073E-01	-1.209E-03	-2.537E-04	4.348E-04	-8.761E-02	-9.972E-03
	9.00	-2.073E-01	1.330E-03	-2.537E-04	4.348E-04	-8.647E-02	-1.025E-02
93 LOAD2							
	0.00	-1.078E-01	-3.749E-03	-1.310E-04	4.348E-04	-4.614E-02	-2.113E-02
	4.50	-1.078E-01	-1.210E-03	-1.310E-04	4.348E-04	-4.555E-02	-9.969E-03
	9.00	-1.078E-01	1.329E-03	-1.310E-04	4.348E-04	-4.496E-02	-1.024E-02
94 LOAD1							
	0.00	-2.794E-01	4.204E-03	-7.524E-03	4.348E-04	-8.647E-02	-1.025E-02
	4.50	-2.794E-01	6.743E-03	-7.524E-03	4.348E-04	-5.261E-02	-3.488E-02
	9.00	-2.794E-01	9.282E-03	-7.524E-03	4.348E-04	-1.876E-02	-7.094E-02
94 LOAD2							
	0.00	-1.452E-01	4.193E-03	-3.910E-03	4.348E-04	-4.496E-02	-1.024E-02
	4.50	-1.452E-01	6.732E-03	-3.910E-03	4.348E-04	-2.737E-02	-3.482E-02
	9.00	-1.452E-01	9.271E-03	-3.910E-03	4.348E-04	-9.775E-03	-7.083E-02
95 LOAD1							
	0.00	-4.286E-01	-1.202E-02	-5.236E-04	4.348E-04	-1.876E-02	-7.094E-02
	22.50	-4.286E-01	6.732E-04	-5.236E-04	4.348E-04	-6.976E-03	5.674E-02
	45.00	-4.286E-01	1.337E-02	-5.236E-04	4.348E-04	4.806E-03	-1.012E-01
95 LOAD2							
	0.00	-2.228E-01	-1.201E-02	-2.744E-04	4.348E-04	-9.775E-03	-7.083E-02
	22.50	-2.228E-01	6.822E-04	-2.744E-04	4.348E-04	-3.601E-03	5.664E-02
	45.00	-2.228E-01	1.338E-02	-2.744E-04	4.348E-04	2.573E-03	-1.015E-01
96 LOAD1							
	0.00	-4.914E-01	-1.284E-02	8.979E-05	4.348E-04	4.806E-03	-1.012E-01
	22.50	-4.914E-01	-1.479E-04	8.979E-05	4.348E-04	2.785E-03	4.492E-02
	45.00	-4.914E-01	1.255E-02	8.979E-05	4.348E-04	7.652E-04	-9.457E-02
96 LOAD2							
	0.00	-2.555E-01	-1.288E-02	5.506E-05	4.348E-04	2.573E-03	-1.015E-01
	22.50	-2.555E-01	-1.801E-04	5.506E-05	4.348E-04	1.334E-03	4.535E-02
	45.00	-2.555E-01	1.252E-02	5.506E-05	4.348E-04	9.544E-05	-9.342E-02
97 LOAD1							
	0.00	-5.233E-01	-1.275E-02	1.983E-04	4.348E-04	7.652E-04	-9.457E-02
	22.50	-5.233E-01	-5.971E-05	1.983E-04	4.348E-04	-3.696E-03	4.959E-02
	45.00	-5.233E-01	1.264E-02	1.983E-04	4.348E-04	-8.157E-03	-9.189E-02
97 LOAD2							
	0.00	-2.720E-01	-1.263E-02	6.873E-05	4.348E-04	9.544E-05	-9.342E-02
	22.50	-2.720E-01	6.655E-05	6.873E-05	4.348E-04	-1.451E-03	4.790E-02
	45.00	-2.720E-01	1.276E-02	6.873E-05	4.348E-04	-2.997E-03	-9.642E-02
98 LOAD1							

		0.00	-6.031E-01	-1.229E-02	-9.719E-04	4.348E-04	-8.157E-03	-9.189E-02
		22.50	-6.031E-01	4.023E-04	-9.719E-04	4.348E-04	1.371E-02	4.188E-02
		45.00	-6.031E-01	1.310E-02	-9.719E-04	4.348E-04	3.558E-02	-1.100E-01
98	LOAD2							
		0.00	-3.136E-01	-1.279E-02	-3.614E-04	4.348E-04	-2.997E-03	-9.642E-02
		22.50	-3.136E-01	-9.695E-05	-3.614E-04	4.348E-04	5.133E-03	4.858E-02
		45.00	-3.136E-01	1.260E-02	-3.614E-04	4.348E-04	1.326E-02	-9.206E-02
99	LOAD1							
		0.00	-8.853E-01	-1.614E-02	6.780E-03	4.348E-04	3.558E-02	-1.100E-01
		16.58	-8.853E-01	-6.787E-03	6.780E-03	4.348E-04	-7.683E-02	8.009E-02
		33.16	-8.853E-01	2.568E-03	6.780E-03	4.348E-04	-1.892E-01	1.151E-01
99	LOAD2							
		0.00	-4.603E-01	-1.301E-02	2.529E-03	4.348E-04	1.326E-02	-9.206E-02
		16.58	-4.603E-01	-3.654E-03	2.529E-03	4.348E-04	-2.867E-02	4.608E-02
		33.16	-4.603E-01	5.701E-03	2.529E-03	4.348E-04	-7.061E-02	2.910E-02
100	LOAD1							
		0.00	-1.46	2.562E-03	-1.414E-02	4.348E-04	-1.892E-01	1.151E-01
		4.50	-1.46	5.101E-03	-1.414E-02	4.348E-04	-1.256E-01	9.782E-02
		9.00	-1.46	7.640E-03	-1.414E-02	4.348E-04	-6.202E-02	6.915E-02
100	LOAD2							
		0.00	-7.614E-01	-3.786E-03	-5.274E-03	4.348E-04	-7.061E-02	2.910E-02
		4.50	-7.614E-01	-1.247E-03	-5.274E-03	4.348E-04	-4.687E-02	4.043E-02
		9.00	-7.614E-01	1.292E-03	-5.274E-03	4.348E-04	-2.314E-02	4.032E-02
101	LOAD1							
		0.00	-1.46	7.640E-03	-1.414E-02	4.348E-04	-6.202E-02	6.915E-02
		13.00	-1.46	1.497E-02	-1.414E-02	4.348E-04	1.217E-01	-7.778E-02
		25.99	-1.46	2.230E-02	-1.414E-02	4.348E-04	3.054E-01	-3.200E-01
101	LOAD2							
		0.00	-7.614E-01	1.292E-03	-5.274E-03	4.348E-04	-2.314E-02	4.032E-02
		13.00	-7.614E-01	8.624E-03	-5.274E-03	4.348E-04	4.540E-02	-2.411E-02
		25.99	-7.614E-01	1.596E-02	-5.274E-03	4.348E-04	1.139E-01	-1.838E-01
102	LOAD1							
		0.00	-1.46	2.230E-02	-1.414E-02	4.348E-04	3.054E-01	-3.200E-01
		6.38	-1.46	3.364E-02	-1.414E-02	4.348E-04	3.955E-01	-4.983E-01
		12.75	-1.46	4.498E-02	-1.414E-02	4.348E-04	4.856E-01	-7.489E-01
102	LOAD2							
		0.00	-7.614E-01	1.596E-02	-5.274E-03	4.348E-04	1.139E-01	-1.838E-01
		6.38	-7.614E-01	2.729E-02	-5.274E-03	4.348E-04	1.476E-01	-3.217E-01
		12.75	-7.614E-01	3.863E-02	-5.274E-03	4.348E-04	1.812E-01	-5.318E-01

COVER SHEET FOR CC N-755
Notes for the Reviewer (rev. 3)

1. By voted action by the Standards Committee (May 2006) the first revision of this Case will not be metricated.

2. The Chair and members of the Committee on Conformity Assessment have reviewed this Case and found no problems.

3. On review of this Case by members of the Plastic Pipe Institute (PPI) it was decided that material PE-4710 should be used vice PE-3408. On review of ASTM-3355 revisions, under the 02 revision the PE-4710 material would be a PE-3408. The 05 revision with enhancements now separates the two materials, clearly for this Case the PE-4710 material is best.

4. Section XI requested that a matrix be created to focus on the Section XI references, which is the material they requested to see and approve.

	Section III	Section XI
CC Inquiry & Reply	**X**	**X (Para. 2)**
1000 General Requirements	**X**	
2000 Material	**X**	
3000 Design	**X**	
4000 Installation	**X**	
5000 NDE	**X**	**X (Para. –5530)**
6000 Pressure Test	**X**	**X (Para. –6300)**
7000 Over-Pressure Protection	**X**	
8000 Stamping	**X**	

5. Support Documents:

a) ASTM D-3035-03a, Standard Specification for Polyethylene (PE) PlasticPipe (DR-PR) Based on Controlled Outside Diameter

b) ASTM D-3261-03, Standard Specification for Butt Heat Fusion Polyethylene (PE) Plastic Fittings for Polyethylene (PE) Plastic Pipe and Tubing

c) ASTM D-3350-05, Standard Specification for Polyethylene Plastics Pipe and Fittings Materials

d) ASTM F-714-03, Standard Specification for Polyethylene (PE) Plastic Pipe (SDR-PR) Based on Outside Diameter

e) ASTM F-1055- 98, Standard Specification for Electro fusion Type Polyethylene Fittings for Outside Diameter Controlled Polyethylene Pipe and Tubing

f) ASTM F-2206-02, Standard Specification for Fabricated Fittings of Butt-Fused Polyethylene (PE) Plastic Pipe, Fittings, Sheet Stock, Plate Stock, or Block Stock

g) Design Commentary for Design Section (-3000)

h) EPRI Report 1011836, Design and Qualification of High-Density Polyethylene for ASME Safety Class 3 Piping Systems

i) Polyethylene 101, Central Plastics, Rick Pounder, March, 25, 2004

j) Principles of Polyethylene Fusion, Central Plastics, Rick Pounder, April 30, 2004

k) HDPE: The Water System of the 21th Century, Central Plastics, February 25, 2001

l) EPRI Report 10113549, ASME BPVC Section III, Division 1, Seismic and Concurrent Load Design Criteria for Buried High Density Polyethylene Pipe

If you have any questions during the review of this document please let me know.

Frank Schaaf , Project Manager

This page is not part of the action

Code Case N-755

Use of Polyethylene (PE) Plastic Pipe for Section III, Division 1, Construction and Section XI Repair/Replacement Activities

Inquiry: Under what conditions may polyethylene (PE) pipe be used for the construction of Section III, Division 1, Class 3, buried piping systems?

Reply: It is the opinion of the Committee that buried PE piping systems may be constructed to the rules of Section III, Division 1, Class 3 provided the following requirements for PE piping are met.

1. New Construction by a Certificate Holder

a) This Case provides the requirements for the design, procurement, fabrication, installation, examination and testing of PE material.

1) For the construction of a buried PE piping system, only the following are permitted: straight PE pipe, three-joint and five joint mitered elbows (made from PE pipe), PE to metallic flanges, and butt fusion joints.

2) All metallic components that interface with the PE material shall meet the requirements of Subsection ND, Class 3 construction.

b) All applicable requirements of Section III shall be met unless modified by this Case.

c) Use of this Case shall be identified on the N-5 Data Report

2. Repair/Replacement Activity by an Owner

a) If this Case is used for a Section XI activity, the Responsibilities and Duties of the Certificate Holder may be assumed by the Owner. In lieu of the provisions of IWA-4000, the following requirements shall be met;

1) A Repair/Replacement Organization cannot be used by the Owner to perform work in accordance with this Case, unless the Repair/Replacement Organization is an appropriate N-Type Certificate Holder.

2) The requirements of IWA-4140 through IWA-4170, and IWA-4300 shall apply. For use with Section XI Editions and Addenda prior to the 2003 Addenda, the provisions of IWA-4180 shall also be met.

3) Procurement of all PE material and components shall be in accordance with paragraph –1200.

4) When the term Authorized Nuclear Inspector is used in this Case it shall be interpreted to mean Authorized Nuclear Inservice Inspector for Section XI activities.

5) The requirements for NDE personnel in IWA-2000 shall apply with additional requirements of –5530 of this Case.

6) The requirements of -6000 shall be used in lieu of IWA-4500.

7) Use of this Case shall be identified on the NIS-2 report form.

-1000 GENERAL REQUIREMENTS
-1100 SCOPE

(a) This Case contains rules for the construction of Class 3 polyethylene pressure piping components at temperatures not exceeding140°F. Design pressures shall not exceed 150 psi for temperatures of 140°F and less. Use of these materials is permitted only for buried Plant Service Water Systems that are classified as Class 3.

(b) Terms relating to polyethylene as used in this Case are defined in Supplement 1.

-1200 QUALIFICATION OF SUPPLIERS

Qualification
(a) The PE material shall be procured from a qualified supplier as follows;

(1) The Certificate Holder shall be responsible for surveying, qualification, and auditing of the Nonmetallic Material Manufacturer and the Nonmetallic Material Constituent Supplier based on the survey and audit results of the Nonmetallic Material Manufacturer. Alternately, the Certificate Holder shall audit and qualify the Nonmetallic Material Manufacturer for surveying/auditing the Nonmetallic Material Constituent Supplier as permitted by NCA-3125 and NCA-3820.

(a) The survey and audit of the Nonmetallic Material Manufacturer will establish the following;

1. verification process of constituent material chemistry, and

2. Quality System Program conforms to NCA- 3900.

(b) When survey and audit of the Nonmetallic Material Constituent Supplier is required, the survey and audit shall evaluate the Quality System Program and the implementation of ASTM D-3350, Standard Specification for Polyethylene Plastics Pipe and Fittings Materials.

(c) Satisfactory completion of the survey and audit will allow the Nonmetallic Material Manufacturer to supply material to the Certificate Holder for a period of three years. After the three year period an audit shall be performed to assure continued program maintenance.

(2) In accordance with NCA-8120(b), a Certificate of Authorization may be issued by the Society to an organization certifying joining by fusing in accordance with this Case.

(3) The Certificate Holder responsible for the installation of the PE pipe shall assure that the material meets the requirements of the Design Specification

(b) The Certificate Holder shall perform any of the functions required by their respective Quality Assurance Program which are not performed by the Nonmetallic Material Manufacturer. He may elect to perform any other Quality Program functions, which would normally be the responsibility of the Nonmetallic Material Manufacturer. These functions shall be clearly defined in the Certificate Holder Quality Assurance Program.

d) The Certificate Holder shall make all necessary provisions so that his Authorized Inspection Agency can make the inspections necessary to comply with this Case.

-1210 PE Procurement Chain

(a) When the Quality System surveys/audits required by -1200 have been completed, the Certificate Holder shall establish a qualified PE supply chain.

(1) The Nonmetallic Material Constituent Supplier is the organization which manufactures and certifies the base PE material pellets.

(2) The Nonmetallic Material Manufacturer is the organization which manufactures, and certifies PE components in compliance with requirements of this Case. He shall perform or shall supervise and directly control one or more of the operations which affect the PE material properties capable to meet the requirements of the basic material specification, and shall verify the satisfactory completion of all other requirements performed by other organizations prior to his certification.

(3) The Nonmetallic Material Supplier is an organization which supplies products of the Nonmetallic Material Manufacturer but does not perform any operations which affect the PE materials properties required by the basic material specification.

(b) All pressure retaining PE material used in construction of components shall be supplied with a certified certificate of analyses for batch (CCAB) or product quality certification (PQC). These documents shall include all the results of analysis and production tests performed on the PE material.

(1) Nonmetallic Material Constituent Supplier - Certified Certificate of Analysis for Batch or Product Quality Certification shall include PE material identification, physical property test results, and melt index temperature when required by a Certificate Holder when the approved Nonmetallic Material Manufacturer program relies on audits and certification.

(2) Nonmetallic Material Manufacturer - Certified Analysis for Batch or Product Quality Certification shall include PE material identification, physical property test results (includes all in-situ and final tests), melt index temperature, mechanical property test results, and shall certify that the product was made from virgin pellets (no scrap or regrind material). The product form shall be permanently marked.

(3) Nonmetallic Material Supplier - Supply documentation that the product form was adequately stored to prevent damage to the product form.

-2000 MATERIALS
-2100 GENERAL REQUIREMENTS FOR MATERIALS
-2110 Scope

(a) All PE material and components shall be procured using the requirements of this Case and the following additional requirements.

(1) PE material shall be selected from approved ASTM standards listed in Supplement 2, and shall have material properties not less than those for cell classification 445474C per ASTM D 3350-05 (PE 4710).

(2) Only PE pipe, mitered elbows, and flanges using Carbon Black pigment shall be used in this Case.

(3) All PE product forms (pipe, mitered elbows, and flanges) shall conform to the ASTM Standards identified in Supplement 2 as applicable.

(b) PE material shall be marked in accordance with the marking requirements of the ASTM specified for the material as applicable. If required the PE material shall be marked for identification purposes using a metallic paint marker or stenciling marker.

(c) All metallic materials and components shall be procured using the requirements of Subsection ND.

-2200 ADDITIONAL PRODUCT FORM REQUIREMENTS

-2210 Mitered Elbows

The elbow fabricator shall be covered under the Certificate Holder's Quality Assurance Program. The Certificate Holder shall provide the services of an Authorized Nuclear Inspector. The Certificate Holder shall ensure the following requirements are met.

(a) All PE pipe material used shall comply with -2110(a)

(b) The configuration of the mitered elbow shall meet the requirements of –3022.4

(c) All fabrication processes used in the fabrication of the mitered elbow shall meet the requirements of –4000 and Supplement 9.

(d) Mitered elbows shall have the fused joints inspected and accepted in accordance with –5000.

(e) The code data report NM(PE)-2 shall be used for this product form (Supplement 4).

-2220 Transition Flange

(a) The pressure rating of the transition flange shall be equal to or greater than the attached straight pipe.

(b) The material cell classification shall be less than 445474C per ASTM D 3350-05 (PE 4710)

-2300 EXAMINATION AND REPAIR OF MATERIAL

-2310 Receipt Examination

(a) All PE material external surfaces shall be given a visual examination prior to installation. Any indentation more than 10% of the minimum wall thickness, regardless of wall thickness, shall be unacceptable.

(b) Personnel performing the examination shall be qualified in accordance with -5000 of this Case.

-2320 Repair of Material

(a) No repairs are permitted on any component manufactured from PE material.

(b) For pipe and mitered elbows, the damaged section of pipe shall be physically removed and discarded.

(c) For flanges the following requirements shall be met;

(1) if the damaged area is in the flange section the entire flange shall be replaced, and

(2) if the damaged area is in the pipe section the section shall be removed and discarded.

-3000 DESIGN

-3001 Scope

The design rules of this Section are limited to buried, polyethylene piping systems constructed of straight pipe, three and five-joint mitered elbows, fusion joints, and flanged connections.

-3010 Nomenclature

A = crosssection area of pipe at the pipe section where the evaluation is conducted, in^2
B_d = trench width, ft
B' = burial factor
c = the sum of mechanical allowances and erosion allowance, in
D = pipe outside diameter at the pipe section where the evaluation is conducted, in
D_{avg} = average pipe diameter in accordance with ASTM F-714
DR = dimension ratio of pipe = mean diameter divided by the minimum fabricated wall thickness = $D_{avg} / t_{fab\ min}$
E_{pipe} = modulus of elasticity of pipe, psi, Table 3031-3
E' = modulus of soil reaction, psi (Data is site specific)
E'_N = modulus of soil reaction of native soil around trench, psi (Data is site specific)
F_a = axial force due to the specified Design, Service Level A, B, C, or D applied mechanical loads, lb
F_{aC} = axial force range due thermal expansion and/or the restraint of free end displacement, lb
F_{aD} = axial force due to the non repeated anchor motion, lb
F_{aE} = axial force range due to the combined effects of seismic wave passage, seismic soil movement, and building seismic anchor motion effects, lb
F_b = upward force per unit length, lb/ft
F_S = soil support factor, Table 3031-2
f_o = ovality correction factor, Table 3033.2-1
H = height of ground cover, ft
H_{gw} = height of water table above pipe, ft
K = bedding factor = 0.1
L = deflection lag factor, 1.25 to 1.50, or 1.0 if using the soil prism pressure
i = stress intensification factor, Table 3042-1
M = resultant moment due to the specified Design, Service Level A, B, C, or D applied mechanical loads, in-lb
M_C = resultant moment range due thermal expansion and/or the restraint of free end displacement, in-lb
M_D = resultant moment due to the non repeated anchor motion, in-lb
M_E = resultant moment range due to the combined effects of seismic wave passage, seismic soil movement, and building seismic anchor motion effects, in-lb
P = internal gage pressure coincident with given service level or loading, psi
P_D= internal design gage pressure at the specified design temperature. psi

P_E = vertical soil pressure loads due to weight cover of earth, lb/ft^2
P_{hydro} = external hydrostatic pressure, equal to earth plus groundwater pressure plus surcharge load, psi
P_L = vertical soil pressure due to surcharge loads, lb/ft^2
R = buoyancy reduction factor
S = allowable stress, psi, Table 3021-1
T_D= Design Temperature, deg F
t = nominal pipe wall thickness, in
t_{design} = minimum required wall thickness, in
$t_{fab\ min}$ = minimum thickness in accordance with ASTM F-714
t_{min} = pressure design thickness, in
W_c = weight of contents (equals 0 when empty), lb/ft
W_P = weight of pipe per unit length, lb/ft (exclude weight of contained liquid to represent the worst case of an empty pipe)
W_w = weight of water displaced by pipe, per unit length, lb/ft
α = coefficient of thermal expansion, 1/°F
σ_{sw} = circumferential compressive stress in the sidewalls, psi
ΔP = differential pressure due to negative internal pressure, psi
ΔT_{eq} = equivalent temperature rise, deg.F
ε_{soil} = maximum soil strain due to seismic wave passage
Ω = ring deflection
Ω_{max} = maximum allowable change in diameter as a per cent of the original diameter, commonly called the change in ring diameter, Table 3031-1
$\rho_{saturated}$ = density of saturated soil, lb/ft^3
ρ_{dry} = density of dry soil, lb/ft^3
ν = Poisson ratio (0.35 for short duration loads (5 min. or less) to 0.45 for long duration loads(greater than 5 min.))

-3012 Design Life

(a) The Design Specification shall specify the design life of the system, not to exceed 50 years.

(b) The duration of load shall be specified for each load case, and the PE pipe physical and mechanical properties shall be based on the duration of load.

-3016 Design and Service Loading

Design loads shall be as defined in ND-3112.1 through ND-3112.3. Loads applied to buried PE pipe shall be defined in the Design Specification, and shall include, as a minimum, the following:

(a) Maximum and minimum internal design gage pressure P_D, for pressure design in accordance with paragraphs -3021 and -3022.

(b) Maximum and minimum temperature T, for the selection of allowable stress (Tables 3021-1 and 3035-3) and design for temperature effects in accordance paragraph –3040. The maximum Service Level A temperature shall be the Design Temperature, T_D .

(c) The stress limits for the loads resulting from the maximum flow velocity, v, shall be as provided in paragraph -3021.2

(d) Vertical soil pressure P_E, including saturated soil, surcharge, buoyancy and flotation, for the designs in accordance with paragraph 3030.

(e) Vertical pressure due to weight of soil, P_E, and surcharge loads P_L for the design in accordance with paragraph 3030

(f) Permanent ground movement, soil settlement, for design as non-repeated anchor movements in accordance with paragraph -3030.

(g) Seismic wave passage and, seismic soil movement and building anchor motions, for seismic design in accordance with paragraph -3050.

(h) Ground movement caused by frost heave for design for expansion and contraction in accordance with paragraph -3042.

-3021 Pressure Design of Pipe

-3021.1 Minimum Required Wall Thickness. The minimum required wall thickness of straight sections of pipe for pressure design shall be determined by

$$t_{design} = t_{min} + c$$

t_{design} = minimum required wall thickness, in
t_{min} = pressure design thickness, in
c = the sum of mechanical allowances and erosion allowance, in

$$t_{min} = \frac{P_D D}{(2S + P_D)}$$

t_{min} = pressure design thickness, in
P_D = Piping system internal Design Pressure (gage) at the specified Design Temperature T_D, both being specified in the Piping Design Specification. This pressure does not include the consideration of pressure spikes due to transients, psi
D = pipe outside diameter at the pipe section where the evaluation is conducted, in
S = allowable stress, psi, per Table 3021-1

Table 3021-1 Allowable Stress S for PE (psi)

Temperature (°F)	Load Duration (years)				
	10 yrs	20 yrs	30 yrs	40 yrs	50 yrs

≤70	840	840	820	820	800
104	620	620	620	620	620
120	520	*	*	*	*
140	430	*	*	*	*

* Values in Development

-3021.2 Allowable Service Level Spikes due to Transients Pressures. The sum of the maximum anticipated operating pressure plus the maximum anticipated Level B pressure spikes due to transients shall be no greater than 1.5 times the piping system Design Pressure (see paragraph -3021.1). The sum of the maximum anticipated operating pressure plus the maximum anticipated Level C and D pressure spikes due to transients shall be no greater than 2 times the piping system Design Pressure (see paragraph -3021.1).

-3022 Pressure Design of Joints and Fittings

-3022.1 Polyethylene pipe shall be joined using the butt fusion process. All connections to metallic piping shall be flanged joints.

-3022.2 Sustained pressure and pressure rating of polyethylene pipe fittings shall comply with the specifications listed in Supplement 2. The pressure rating of fittings shall be equal to or greater than the attached straight pipe.

-3022.3 Flanged connections shall include a metallic back-up ring and shall provide a leak tight joint up to and including the piping hydrostatic test pressure. In addition, the maximum surge pressure per –3021.2 shall not cause permanent deformation of the pipe.

-3022.4 Mitered elbows shall comply with the requirements of ND-3644. In place of ND-3644 (e) butt fusion joints shall be used in accordance with this Case. In addition, the mitered elbows shall be one dimension ratio (DR) lower than that of the attached straight pipe.

-3030 Soil and Surcharge Loads

-3031 Ring Deflection. The soil and surcharge loads on a buried PE pipe shall not cause the pipe diameter to deflect (ring deflection, Ω) beyond a limit Ω_{max} where

$$\Omega = \frac{1}{144} \times \frac{K \times L \times P_E + K \times P_L}{\frac{2E_{pipe}}{3} \times \left(\frac{1}{DR-1}\right)^3 + 0.061 \times F_S \times E'} \leq \Omega_{max}$$

where

$$P_E = \rho_{saturated} \times H_W + \rho_{dry} \times (H - H_W)$$

K = bedding factor = 0.1

L = deflection lag factor, 1.25 to 1.50, or 1.0 if using the soil prism pressure
P_E = vertical soil pressure due to earth loads, lb/ft^2
P_L = vertical soil pressure due to surcharge loads, lb/ft^2
E_{pipe} = apparent modulus of elasticity of pipe at 50 years, psi
DR = dimension ratio of pipe
D = pipe outside diameter, in
t = nominal pipe wall thickness at the pipe section where the evaluation is conducted, in
F_S = soil support factor, Table 3031-2
E' = modulus of soil reaction, psi
E'_N = modulus of soil reaction of native soil around trench, psi
B_d = trench width, ft
$\rho_{saturated}$ = density of saturated soil, lb/ft^3
ρ_{dry} = density of dry soil, lb/ft^3
H = height of ground cover, ft
H_W = height of water table above pipe, ft

Table 3031-1 Maximum Allowable Ring Deflection PE

DR	Ω_{max} (%)
13.5	6.0
11	5.0
9	4.0
7.3	3.0

Table 3031-2 Soil Support Factor F_S

E'_N/E'	B_d/D					
	1.5	2.0	2.5	3.0	4.0	5.0
0.1	0.15	0.30	0.60	0.80	0.90	1.00
0.2	0.30	0.45	0.70	0.85	0.92	1.00
0.4	0.50	0.60	0.80	0.90	0.95	1.00
0.6	0.70	0.80	0.90	0.95	1.00	1.00
0.8	0.85	0.90	0.95	0.98	1.00	1.00
1.0	1.00	1.00	1.00	1.00	1.00	1.00
1.5	1.30	1.15	1.10	1.05	1.00	1.00
2.0	1.50	1.30	1.15	1.10	1.05	1.00
3.0	1.75	1.45	1.30	1.20	1.08	1.00
5.0	2.00	1.60	1.40	1.25	1.10	1.00

Table 3031-3 Modulus of Elasticity of PE Pipe (ksi)

Load Duration	Temperature (°F)			
	≤73 °F	100 °F	120 °F	140 °F
< 10 h	110	100	65	50
10 h	58	47	31	24
100 h	51	42	27	21
1000 h	44	36	23	18

1 y	38	31	20	16
10 y	32	26	17	13
50 y	28	23	15	12

-3032 Compression of Sidewalls. The circumferential compressive stress in the sidewalls σ_{sw} due to soil and surcharge loads shall not exceed 1000 psi

$$\sigma_{sw} = \frac{(P_E + P_L) \times DR}{2 \times 144} \leq 1000 \text{ psi}$$

σ_{sw} = circumferential compressive stress in the sidewalls of pipe and miters, psi
P_E = vertical soil pressure due to earth loads, lb/ft^2
P_L = vertical soil pressure due to surcharge loads, lb/ft^2
DR = dimension ratio of pipe

-3033 External Pressure.

-3033.1 Buckling Due to External Pressure. External pressure from ground water, earth loads, and surcharge loads on a buried PE pipe shall not cause the pipe to buckle.

$$[\ P_{hydro} = (P_E + P_L + P_{gw})\ ] / 144 \leq 2.8\ [R \times B' \times E' \times E_{pipe} / 12\ (DR - 1)^3]^{1/2}$$

P_E = vertical soil pressure due to earth loads, lb/ft^2
P_L = vertical soil pressure due to surcharge loads, lb/ft^2
P_{gw} = pressure due to ground water, lb/ft^2
R = buoyancy reduction factor
E_{pipe} = modulus of elasticity of pipe, psi
E' = soil modulus, psi
DR = dimension ratio of pipe
B' = burial factor

and the buoyancy and burial factors are

$$R = 1 - 0.33 \times \frac{H_{gw}}{H}$$

$$B' = \frac{1}{1 + 4 \times \exp(-0.065 \times H)}$$

H_{gw} = height of ground water above pipe, ft
H = depth of cover, ft

-3033.2 Effects of Negative Internal Pressure. When the pipe is subject to a negative internal pressure, it shall withstand the differential pressure without credit for the surrounding soil

$$\Delta P \leq \frac{f_o}{2} \times \frac{2E_{pipe}}{(1-\upsilon^2)} \times \left(\frac{1}{DR-1}\right)^3$$

ΔP = differential pressure due to negative internal pressure of pipe and miters, psi
f_o = ovality correction factor, Table 3033.2-1
E_{pipe} = modulus of elasticity of pipe, psi
ν = Poisson ratio (0.35 for short duration loads to 0.45 for long duration loads)
DR = dimension ratio

Table 3033.2-1 Ovality Correction Factor

Per Cent-Ovality	1%	2%	3%	5%	6%
Ovality Correction Factor	0.91	0.84	0.76	0.64	0.59

-3034 Flotation. Buried PE pipe shall have sufficient cover or be anchored to the ground to prevent flotation by groundwater. The upward resultant force due to buoyancy on a buried pipe in saturated soil is

$$W_W < W_P + P_E \times D/12$$

W_w = weight of water displaced by pipe, per unit length, lb/ft
W_P = weight of empty pipe per unit length, lb/ft
P_E = vertical soil pressure due to earth loads, lb/ft^2
D = pipe outside diameter, in

-3035 Longitudinal Stress Design

-3035.1 Longitudinal Applied Mechanical Loads, Longitudinal stresses due to axial forces and bending moments resulting from applied mechanical loads shall not exceed kxS where

$$B_1 \times \frac{P_a \times D}{2 \times t} + 2 \times B_1 \times \frac{F_a}{A} + B_2 \times \frac{M}{Z} \leq k \times S$$

B_1 = stress index, Table 3035-1
B_2 = stress index, Table 3035-1
P_a = Design or Service Level A, B, C, or D pressure, psi
D = outside pipe diameter at the pipe section where the evaluation is conducted, in
t = nominal pipe wall thickness at the pipe section where the evaluation is conducted, in
F_a = axial force due to the specified Design, Level A, B, C, or D applied mechanical loads, lb
A = cross section area of pipe wall at the pipe section where the force is calculated, in^2

M = resultant bending moment due to the specified Design, Level A, B, C, or D applied mechanical loads, in-lb
Z = section modulus of pipe cross section at the pipe section where the moment is calculated, in^3
k = factor from Table 3035-2
S = allowable stress, psi, Table 3021-1

Table 3035-1 Stress Indices

	DR 7	DR 9	DR 11	DR 13.5
B_1 Straight and Butt Fused Joint	0.5	0.5	0.5	0.5
B_2 Straight and Butt Fused Joint	1.0	1.0	1.0	1.0
B_1 Miter (a)	0.69	0.69	0.69	0.69
B_2 Miter (a)	1.38	1.64	1.91	2.21

(a) Mitered elbows shall not exceed 22.5 deg. per segment

Table 3035-2 Design and Service Level Longitudinal Stress Factors

Service Level	Design	A	B	C	D
Factor k	1.0	1.0	1.1	1.33	1.33

-3035.2 Short Duration Longitudinal Applied Mechanical Loads. Alternatively, for the assessment of short duration loads (less than five minutes), the allowable stress S may be replaced by 40% of the tensile strength at material yield. The method for determination of the tensile strength at material yield are given in ASTM D 638 Standard Test Method for Tensile Properties of Plastics. For cell classification 445474C, short duration allowable stress values have been determined and are provided in Table 3035-3.

Table 3035-3 Short-Duration Allowable Stress Values

Temp (°F)	≤70	100	120	140
S (psi)	1200	940	770	630

-3040 Temperature Design

-3041 Minimum Temperature. The polyethylene material shall not be used at a temperature below the manufacturer limit, but in no case shall the temperature be less than minus 50°F.

-3042 Design for Expansion and Contraction

-3042.1 Fully Constrained Thermal Contraction. The tensile stress resulting from the assumption of fully constrained thermal contraction of the buried pipe when $T_{water} < T_{ground}$, increased by the tensile stress due to axial contraction from Poisson effect, shall not exceed the allowable stress S

$$\sigma_\tau = \left| E_{pipe} \times \alpha \times \Delta T - \upsilon \times \frac{P \times D}{2 \times t} \right| \leq S$$

S = allowable stress, psi
α = coefficient of thermal expansion, 1/°F
$\Delta T = T_{water} - T_{ground} < 0$
ν = Poisson ratio (0.35 for short duration loads to 0.45 for long duration loads)
E_{pipe} = modulus of elasticity of pipe, psi, Table 3031-3
P = internal design gage pressure, psi, including pressure spikes due to transients from anticipated waterhammer events
D = pipe outside diameter, in
t = nominal wall thickness, in

3042.2 Fully Constrained Thermal Expansion. The tensile stress resulting from the assumption of fully constrained thermal expansion of the buried pipe when $T_{water} > T_{ground}$, shall not exceed the allowable stress S

$$\sigma_\tau = E_{pipe} \times \alpha \times \Delta T \leq S$$

S = allowable stress, psi
α = coefficient of thermal expansion, 1/°F
$\Delta T = T_{water} - T_{ground} > 0$
E_{pipe} = modulus of elasticity of pipe, psi, Table 3031-3

-3042.3 Alternative Thermal Expansion or Contraction Evaluation. As an alternative to -3042.1 and –3042.2, the soil stiffness may be accounted for to calculate pipe expansion and contraction stresses. The stresses shall satisfy the following equation

$$\frac{iM_C}{Z} + \frac{F_{aC}}{A} \leq 1100 \text{ psi}$$

i = stress intensification factor, Table 3042.2-1
F_{aC} = axial force range due thermal expansion or contraction and/or the restraint of free end displacement, lb
A = cross-section area of pipe at the pipe section where the force is calculated, in^2
M_C = resultant moment range due thermal expansion or contraction and/or the restraint of free end displacement, in-lb
Z = section modulus of pipe cross section at the pipe section where the moment is calculated, in^3

S = allowable stress, psi, Table 3021-1

Table 3042.2-1 Stress Intensification Factor i

Fitting or Joint	i
Straight Pipe	1.0
Butt Fusion	1.0
Mitered Elbows	2.0

-3043 Non-Repeated Anchor Movements

The effects of any single non-repeated anchor movements shall meet the requirements of the following equation

$$\frac{iM_D}{Z} + \frac{F_{aD}}{A} < 2S$$

i = stress intensification factor, Table 3042.2-1
F_{aD} = axial force due to the non repeated anchor motion, lb
A = crosssection area of pipe at the pipe section where the force is calculated, in^2
M_D = resultant moment due to the non repeated anchor motion, in-lb
Z = section modulus of pipe cross section at the pipe section where the moment is calculated, in^3
S = allowable stress, psi, Table 3021-1

-3050 Seismic Design
-3051 Seismic Induced Stresses

The stresses in the buried PE piping system due to soil strains caused by seismic wave passage, seismic soil movement, and building seismic anchor motion effects, where applicable, shall be evaluated. The stresses shall satisfy the following equation

$$\frac{iM_E}{Z} + \frac{F_{aE}}{A} \leq 1100 \text{ psi}$$

i = stress intensification factor, Table 3042.2-1
F_{aE} = axial force range due to the combined effects of seismic wave passage, seismic soil movement, and building seismic anchor motion effects, lb
A = crosssection area of pipe at the pipe section where the force is calculated, in^2
M_E = resultant moment range due to the combined effects of seismic wave passage, seismic soil movement, and building seismic anchor motion effects, in-lb
Z = section modulus of pipe cross section at the pipe section where the moment is calculated, in^3
S = allowable stress, psi, Table 3021-1

Seismic wave passage, seismic soil movement, and building seismic anchor motions shall be combined by square root sum of the squares.

Supplement 3 provides a non-mandatory method for the analysis of seismic wave passage, seismic soil movement, and building seismic anchor motion effects,

-4000 FABRICATION AND INSTALLATION
-4100 GENERAL REQUIREMENTS
-4110 Scope

This Article provides the requirements for the installation of PE piping and fittings. Methods of installation shall be by thermal fusion and flanged fittings. Use of threaded or adhesive joints with PE material is not permitted. All metallic interface components will be installed following the requirements of Subsection ND.

-4120 Examinations

Examination activities that are not referenced for examination by specific Code paragraphs, and are performed solely to verify compliance with requirements of -4000, may be performed by the persons who perform or supervise the work. These visual examinations are not required to be performed by personnel and procedures qualified to -5100 and -5500, respectively, unless so specified.

-4130 REPAIR OF MATERIAL

PE material originally accepted on delivery in which defects exceeding the limits of -2900 are known or discovered during the process of fabrication or installation is unacceptable. The PE material may be used provided the defective area can be physically removed from the material.

-4200 CUTTING, FORMING, AND BENDING

-4210 Cutting

Materials may be cut to shape and size by mechanical means such as machining or cutting.

-4220 Forming and Bending Processes

The PE material shall not be cold or hot formed or bent. A pipe bending radius greater than or equal to 30 times the pipe outside diameter is acceptable for piping with a DR 9 through 13.5 and is considered to be straight pipe.

-4300 FUSING QUALIFICATIONS

-4310 General Requirements

(a) Fusing procedure and machine operator performance qualification shall comply with the requirements of Supplement 9 of this Case.

(b) The Thermal Fusion Butt Joint is the only thermal fusion joint allowed in this Case, see Figure –4310-1.

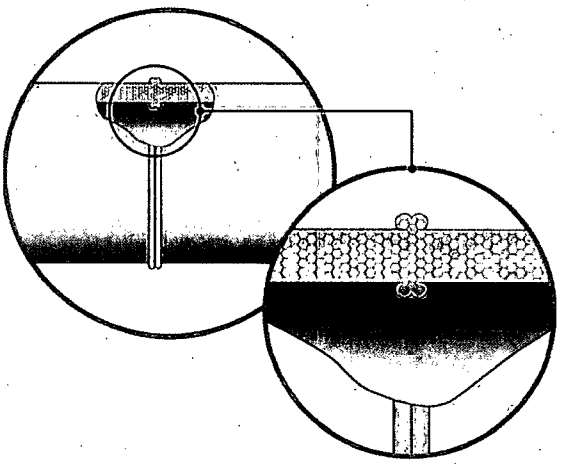

FIGURE -4310-1 Thermal Fusion Butt Joint

-4320 Qualifications

-4321 Required Qualifications

(a) Each Certificate Holder shall be responsible for the fusing done by his organization and shall establish the procedure and conduct the tests required by this Case and Supplement 9 in order to qualify both the fusing procedures and the performance of fusion machine operators who apply these procedures.

(b) Procedures, and fusion machine operators used to join permanent pressure parts shall also meet the qualification requirements of Supplement 9.

-4322 Maintenance and Certification of Records

The Certificate Holder shall maintain records of qualified fusing procedures and the fusion machine operators qualified by them, showing the date and results of tests and the identification mark assigned to each fusing operator. These records shall be reviewed, verified, and signed by any authorized individual assigned by the Certificate Holder and they shall be accessible to the Authorized Nuclear Inspector.

-4323 Fusing Prior to Qualification

Fusing Procedure Specification (FPS) shall be qualified as required by Supplement 9 prior to their use. Only fusing operators who are qualified in accordance with -4320 and Supplement 9 of this Case shall be used.

-4324 Transferring Qualifications

The FPS qualifications and performance qualification tests for fusion machine operators conducted by one Certificate Holder shall not transfer qualified fusing procedures or fusion machine operators records to another Certificate Holder.

-4330 Requirements For Fusing Procedure Qualification Tests

-4331Conformance to Supplement 9 Requirements

All fusing procedure qualification tests shall be in accordance with the requirements of Supplement 9 as supplemented or modified by the requirements of this Case.

-4332 Preparations of Test Coupons and Specimens

Removal of test coupons from the fusion test coupon and the dimensions of specimens made from them shall conform to the requirements of Supplement 9.

-4400 RULES GOVERNING MAKING FUSED JOINTS

-4410 General requirements

-4411 Identification, Storage, and Handling of PE Materials

Each Certificate Holder is responsible for control of the PE materials that are used in the fabrication and installation of components (-4120). Suitable identification, storage, and handling of PE material shall be maintained.

-4412 Cleanliness and Protection of Surfaces To Be Fused

The surfaces of the heater used for fusing shall be free of scale, rust, oil, grease, and other deleterious material. The work shall be protected from deleterious contamination and from rain, snow, and wind during fusing operations. Fusing shall not be performed on wet surfaces.

-4420 Rules For Making Fused Joints

-4421 Fused Joint Fit-up Requirements

(a) Components of different outside diameters shall not be fused together.

(b) The alignment of components for open butt fusion joints will be held in position by the fusing machine, allowable surface mismatch shall be less than 10% of the minimum wall thickness of the components being fused.

(c) To fuse components with differing DR's, the component with the smaller DR shall be countered-bored and tapered to meet the wall thickness of the component with the larger DR and shall comply with Figure –4421.3-1

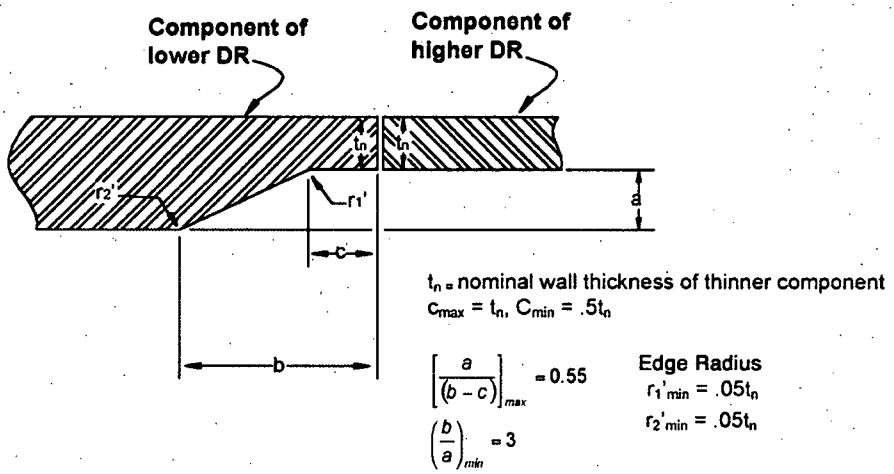

Transition Counter-bore

FIGURE 4421.3-1

-4422 Identification of Joints by Fusing Operator

Each fusing operator shall apply the identification mark assigned to him by the Certificate Holder adjacent to all permanent fused joints or series of joints on which he fuses. The marking shall be 1 ft (.3 m) or less from the fusion bead and shall be done with permanent metallic paint marker or stenciling marker.

-4423 Repairs

Repair of a fused joint is not allowed. All unacceptable joints shall be cut out and replaced.

-4430 Fusing Data Acquisition Recorder

The fusion machine shall have an automatic acquisition data recorder attached to it. The recorder shall record essential variables of the fusion process.

(a) Failure to run the recorder during the fusion process shall be cause to fail the fusion joint.

(b) The butt fusion joint record should be compared to the FPS to ensure that the proper butt fusion parameters and procedures were followed. If any parameter is out of the approved range, the fused joint shall be cut out and remade using the correct FPS.

-4500 ASSEMBLY AND ERECTION

-4510 General

Any distortion of piping to bring it into alignment for joint assembly which introduces a permanent strain in the piping or associated piping components is prohibited.

-4520 Flanged Joints using PE material

(a) Flanged connections are only permitted for the joining of polyethylene pipe to metallic pipe or piping components. The polyethylene flange connection shall be constructed using a polyethylene flange adapter having a DR ratio equal to or less than that of the attached PE pipe and shall be joined by fusion to the attached polyethylene piping.

(b) The polyethylene flange adapter shall be connected to the metal flange using a metallic backing ring, The backing ring shall have a pressure rating equal to or greater than the metal flange.

(c) Before bolting up, flange faces shall be aligned to the design plane within 1/16 in./ft measured across any diameter; flange bolt holes shall be aligned within 1/8 in. maximum offset. Damage to the gasket seating surface on the PE flange which would prevent the gasket sealing shall be replaced per –2320(c).

(d) The flange shall be joined using bolts of a size and strength that conforms to the requirements of ASME B 16.5 or B16.47 as applicable. Bolts or studs should extend completely through their nuts. Any which fail to do so are considered acceptably engaged if the lack of complete engagement is not more than one thread. Flat washers shall be used under bolt heads and nuts

(e) In assembling flanged joints, the gasket shall be uniformly compressed to the proper design loading. Special care shall be used in assembling flanged joints in which the flanges have widely differing mechanical properties. Tightening to a predetermined torque is recommended. No more than one gasket shall be used between contact faces in assembling a flanged joint. The gasket material shall be selected to be consistent and compatible with the service requirements of the piping system. See Figure -4520-1 for a typical flange configuration

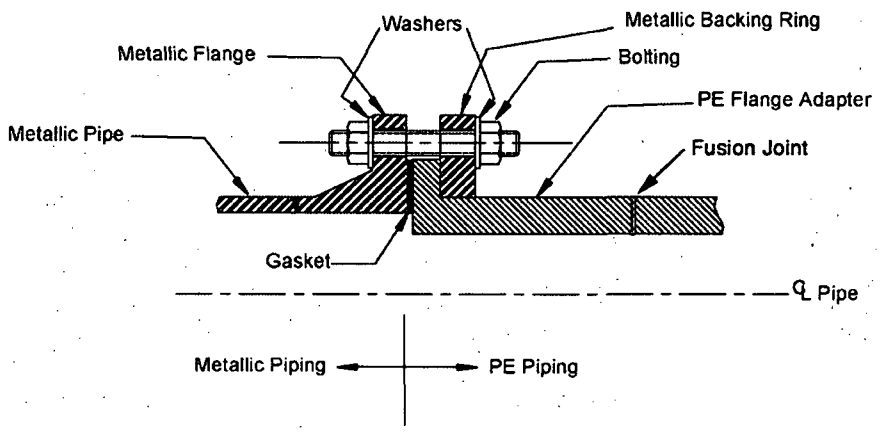

Transition Flange Arrangement

FIGURE -4520-1

-4530 Pipe Supports

All installed PE pipe supports shall meet the requirements of Subsection NF and the following:

(a) Piping shall be supported, guided, and anchored in such a manner as to prevent damage to the piping. Point loads and narrow areas of contact between piping and supports shall be avoided. Suitable padding shall be placed between piping and supports where damage to piping may occur.

(b) Valves and equipment which would transmit excessive loads to the piping shall be independently supported to prevent such loads.

-5000 EXAMINATION
-5100 GENERAL REQUIREMENTS

(a) Visual examinations shall be conducted in accordance with the examination method of Section V, Article 9.

(b) All personnel qualified to perform Visual Examinations on PE pipe, excluding the hydrostatic pressure test, shall receive the same training as required for the fusion machine operator in Supplement 9. This training shall include the use of a fusion machine to make a fused joint, this joint is not required to be tested for qualification. This training shall be documented on a training record.

-5110 Procedures

Examination Procedures. All examinations performed under this Case shall be executed in accordance with detailed written procedures which have been proven by actual demonstration, to the satisfaction of the Authorized Nuclear Inspector. Written procedures, records of demonstration of procedure capability, and personnel qualification shall be made available to the Authorized Nuclear Inspector on request.

-5120 Time of Examination of Completed Fused Joints

Visual examination of all fused joints shall be conducted;

(a) upon the completion of cooling period;
(b) after the review required by paragraph –4430 has been reviewed and accepted; and
(c) shall be completed before piping is placed in the burial trench.

-5200 REQUIRED EXAMINATIONS

Visual Examinations are required on the following material and components.

(a) During receipt inspection of the external surface for indentations.

(b) Fusion joints after the fusion process includes, review and verification of fusion data for the joint, and external surfaces.

(c) All pipe fusion joints during the hydrostatic test.

-5300 ACCEPTANCE STANDARDS

-5310 General Requirements

Unacceptable joints shall be removed. Repair of unacceptable joints is not permitted.

-5320 Visual Examination Acceptance Criteria of external surfaces

-5321 Thermal fusion butt joints shall meet the following:

(a) Joints shall exhibit proper fusion bead configuration, see Supplement 5.

(b) There shall be no evidence of cracks or incomplete fusion.

(c) Joints shall not be visually angled or off-set. The ovality offset shall be less than 10% of the minimum wall thickness of the fused components.

(d) The cleavage between fusion beads shall not extend to or below the outside diameter pipe surface (see Figure –5321-1).

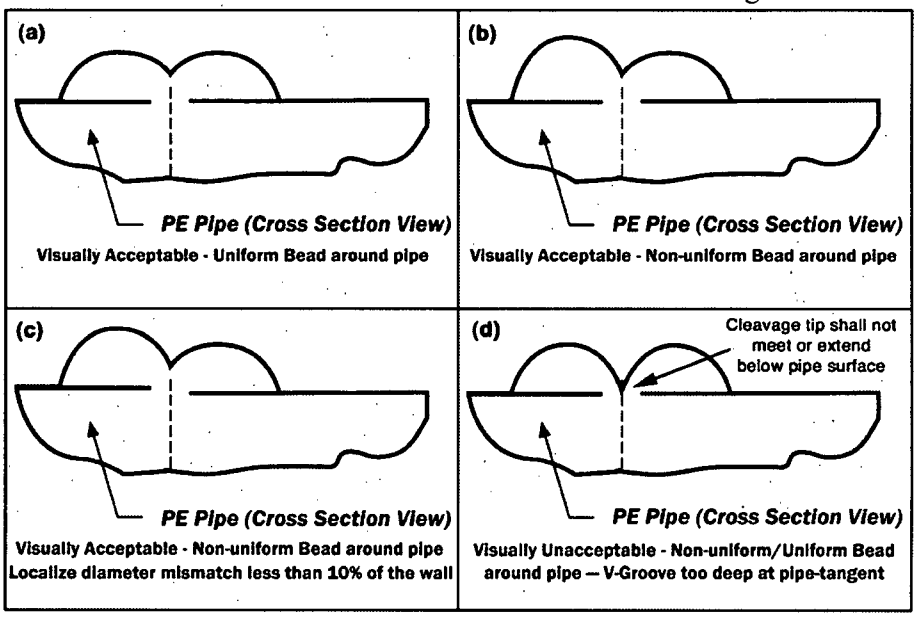

FIGURE -5321-1

(e) Review the data acquisition record for the joint and compare it to the Fusion Procedure Specification (FPS) to ensure the proper parameters and procedures were followed in making the fused joint, see paragraph –5330.

-5330 Process Verification

The data acquisition record for each joint shall be reviewed and compared to the Fusion Procedure Specification (FPS) to ensure the proper parameters and procedures were followed in making the fused joint.

-5500 QUALIFICATION OF NONDESTRUCTIVE EXAMINATION PERSONNEL

-5510 General Requirements

Organizations performing Code required nondestructive examinations shall use personnel qualified in accordance with ND-5520 as applicable. When these services are subcontracted by the Certificate Holder, he shall verify the qualification of personnel to the requirements of ND-5520 as applicable. All nondestructive examinations required by this Case shall be performed by and the results evaluated by qualified nondestructive examination personnel.

-5520 Personnel Qualification Requirements

(a) Personnel performing visual examinations required for this Case shall be qualified in accordance with ND – 5520 and the Certificate Holder's NDE Program. This training shall be documented on a training record.

(b) Personnel performing visual examinations on material receipt and completed fused joints shall receive the required training in paragraph –5100(b). Personnel performing only the hydrostatic test visual examination are not required to complete the training in –5100(b), but are required to complete four hours of training in PE piping and joining practices. This training shall be documented on a training record.

-5530 Alternative Personnel Qualification Requirements

If this Case is used for a Section XI activity, the following requirements shall be used in lieu of paragraph –5520.

(a) Personnel performing visual examinations required by –5200 (a) and (b) shall be qualified and certified as a VT-1 in accordance with IWA - 2000 and shall receive the required training in paragraph –5100(b).

(b) Personnel performing visual examinations required by -5200(c) shall be qualified and certified as a VT-2 in accordance with IWA - 2000 and receive four hours of training in PE piping and joining practices. This training shall be documented on a training record.

-6000 TESTING
-6100 GENERAL REQUIREMENTS

(a) Prior to initial operation, the installed system shall be hydrostatically tested in the presence of the Authorized Nuclear Inspector.

(b) All joints, including fused joints shall be left exposed for examination during the test. For long sections of piping the hydrostatic testing may be accomplished by testing in small sub-sections of the longer section. Upon a satisfactory test of each small section the piping may be buried. This process shall be documented in the Certificate Holder's Quality Assurance Program or the Owner's Repair/Replacement Activities Program and found acceptable to the Authorized Nuclear Inspection Agency.

(c) The pressure in the test section shall be gradually (minimum rate of 5 psig/min not to exceed a maximum rate of 20 psig/min) increased to the specified test pressure and held for 4 hours. Make up water may be added to maintain test pressure during this time to allow for initial expansion. Following the 4 hour initial pressurization period, the test pressure shall be reduced by 10 psig and the system monitored for another 1 hour. Make up water may no longer be added to maintain pressure. Each joint shall be examined. If no visual leakage is observed and the pressure remains within 5% of the test pressure for the 1 hour, the pipe section under test is considered acceptable.

(d) The temperature of the piping under test will be maintained within the temperature limits of the system design.

(e) The total test time including initial pressurization, initial expansion, and time at test pressure, must not exceed 8 hours. If the pressure test is not completed the test section shall be de-pressurized. The test section shall not be re-pressurized for at least 8 hours.

(f) A pneumatic test is not permitted.

-6200 Hydrostatic Test Requirements

(a) The piping system shall be tested by hydrostatic test in accordance with ND-6200.

(b) The minimum test pressure shall be 1.5 times the Design Pressure of the PE piping system plus 10 psi.

(c) Qualified Visual Examination personnel shall conduct the examination.

-6300 Alternate Hydrostatic Test Requirements

If this Case is used for a Section XI activity, the following requirements shall be used in lieu of paragraph –6200.

(a) Instrumentation for the hydrostatic test shall be in accordance with IWA-5260.

(b) The minimum test pressure shall be 1.5 times the Design Pressure of the PE piping system plus 10 psi.

(c) Qualified personnel in accordance –5530(b) shall conduct the examination.

-8000 NAMEPLATES, STAMPING AND REPORTS
-8100 GENERAL REQUIREMENTS
-8110 Scope

The requirements for nameplates, stamping and reports for components constructed in accordance with this Case shall be as given in Article NCA-8000 with the following exceptions:

(a) The attachment of name plates shall be performed using an adhesive or corrosion resistance wire.

(b) No indentation stamping is allowed on the polyethylene pipe surface, all marking shall be performed with a metallic paint marker or stenciling marker.

SUPPLEMENT 1

GLOSSARY

1. Butt Fusion Cycle - Pressure/Time diagram for a defined fusion temperature, representing the butt fusion operation.

2. Certified Certificate of Analysis for Batch (CCAB) – a document attesting that material is in accordance with specified requirements, including batch analysis of all chemical analysis, test, and examinations.

3. control specimen – The specimen from the base material tested to determine the tensile strength for the purpose of determining an acceptable tensile strength.

4. Cool time under Pressure - In the fusion process, the theoretical fusion pressure plus drag pressure is applied between the pipe ends. This pressure must be maintained until the fusion joint is cool to the touch. This time is approximately 30-90 seconds per inch of pipe diameter.

5. coupon – a fusion assembly for procedure or performance qualification testing. The coupon may be any product from sheet plate, pipe, or tube material.

6. Data Acquisition Record - A detailed record of the times and pressures used in the fusion process along with the heater surface temperature , employee information, fusion machine information, pipe information, date and time for a permanent record of each joint made.

7. Drag Pressure - The pressure required by the fusion machine to overcome the drag resistance and frictional resistance and keep the carriage moving at its slowest speed.

8. Drag Resistance - Frictional resistance due to the weight of the length of pipe fixed in the movable clamp at the point at which movement of the moveable clamp is initiated (peak drag) or the friction occurring during movement (dynamic drag)

9. Frictional Resistance in the Butt Fusion Machine - Force necessary to overcome friction in the whole mechanism of the butt fusion machine.

10. Fusion Machine Operator - Person trained to carry out fusion joining between polyethylene (PE) pipes and/or fittings based on the Fusion Procedure Specification (FPS).

11. Fusion Operator Certificate - Approval certificate issued by the examiner/assessor stating the knowledge and the skill of the fusion operator to produce fusion joints following a given fusion procedure.

12. Fusion Procedure - A document providing in detail the required variables for the butt fusion process to assure repeatability in the butt fusion procedure (FPS).

13. Heater Bead-up Size - In the heating cycle, the pipe is brought against the heater and the force is dropped to the soak cycle. During this cycle, a bead of polyethylene is formed between the pipe end and the heater surface on both sides. When the bead-up size reaches the size established in the FPS, it is time to open the carriage and remove the heater.

14. Heater Surface Temperature - The temperature, in degrees F, of the surface of the coated heater is critical to the butt fusion process. It is usually expressed as a range (example: 400 - 450° F) and the common practice is to set the average surface temperature at the mid-range (example: 425° F).

15. hydrostatic design basis (HDB) – one of a series of established stress values for a compound.

16. hydrostatic design stress (HDS) – the estimated maximum tensile stress the material is capable of withstanding continuously with a high degree of certainty that failure of the pipe will not occur. This stress is circumferential when internal hydrostatic water pressure is applied.

17. Interfacial Pressure - The amount of force in pounds (lbs) per square inch of pipe area required to calculate the fusion machine gauge pressure. The interfacial pressure is multiplied by the pipe area in square inches to determine the amount of fusion force (lbs) required to fuse the pipe. This force is divided by the total effective piston area of the hydraulic fusion machine to determine the theoretical gauge pressure to set on the fusion machine. The Drag pressure must be added to this pressure to determine the actual gauge pressure required for fusion. The interfacial pressure usually has a range (example: 60-90 psi) and the common practice is to use the mid-range (example: 75 psi) when making these calculations.

18. long-term hydrostatic pressure - strength (LTHS) – the estimated tensile stress in the wall of the pipe in the circumferential orientation that when applied continuously will cause failure of the pipe at 100,000 hours.

19. Modulus of Soil Reaction, E' - The soil reaction modulus is a proportionality constant that represents the embedment soil's resistance to ring deflection of pipe due to earth pressure. E' has been determined empirically from field deflection measurements by substituting site parameters (i.e. depth of cover, soil weight) into Spangler's equation and "backcalculating" E'.

20. PE – (polyethylene) A polyolefin composed of polymers of ethylene. It is normally a translucent, tough, waxy solid which is unaffected by water and by a large range of chemicals. There are three general classification; low-density, medium-density, and high-density.

21. product quality certification (PQC) – a document attesting that material is in accordance with specified requirements, including batch analysis of all chemical analysis, test, and examinations.

22. stiffness factor – the measurement of a pipe's ability to resist deflection as determined in accordance with ASTM D 2412.

23. test joint – work pieces joined by fusing to qualify fusing procedures, or fusing operators

25. thermoplastic resin - a resin material which does not react or polymerize and which flows with the application of heat and solidifies when cooled. A material which can be reformed.

SUPPLEMENT 2

ASTM PE MATERIAL STANDARDS

The following PE materials standards are acceptable for use in this Case,

1. D-3035-03a, Standard Specification for Polyethylene (PE) PlasticPipe (DR-PR) Based on Controlled Outside Diameter

2. D-3261-03, Standard Specification for Butt Heat Fusion Polyethylene (PE) Plastic Fittings for Polyethylene (PE) Plastic Pipe and Tubing

3. D-3350-05, Standard Specification for Polyethylene Plastics Pipe and Fittings Materials

4. F-714-03, Standard Specification for Polyethylene (PE) Plastic Pipe (SDR-PR) Based on Outside Diameter

5. F-1055- 98, Standard Specification for Electro fusion Type Polyethylene Fittings for Outside Diameter Controlled Polyethylene Pipe and Tubing

6. F-2206-02, Standard Specification for Fabricated Fittings of Butt-Fused Polyethylene (PE) Plastic Pipe, Fittings, Sheet Stock, Plate Stock, or Block Stock

SUPPLEMENT 3

Non-Mandatory Method

The buried pipe may be qualified by analysis for the effects of seismic wave passage, following the method provided in this Appendix.

Step-1. The strains from seismic wave passage, and seismically-induced permanent or temporary movements if any, shall be obtained by a plant-specific geotechnical-civil investigation.

Step-2. The soil strains (Section 3051) shall be converted into an equivalent temperature rise of the buried pipe, as follows

$$\Delta T_{eq} = \frac{\varepsilon_{soil}}{\alpha}$$

ΔT_{eq} = equivalent temperature rise, deg.F
ε_{soil} = maximum soil strain due to seismic wave passage
α = coefficient of thermal expansion of the pipe, $1/^{o}F$

Step-3. The pipe-soil system shall be modeled as a piping system constrained by soil springs.

(a) The pipe model shall consider two cases: short-term modulus (< 10 hours, Table 3031-3) for wave passage and long-term modulus for permanent soil movement (permanent seismic anchor motion).

(b) The soil model shall have at-least a bi-linear stiffness, and shall consider two cases: upper and lower bound of soil stiffness.

For guidance on modeling soil-pipe interaction, refer to ASCE, Guidelines for the Seismic Design of Oil and Gas Pipeline Systems, 1984, ASCE 4 Seismic Analysis of Safety-Related Nuclear Structures and Commentary, or American Lifelines Alliance, Guidelines for the Design of Buried Steel Pipes, July 2001, with February 2005 addendum

Step-4. The equivalent change of temperature ΔT_{eq} shall be applied to the pipe-soil model, to obtain forces and moments throughout the system.

Step-5. The anticipated building seismic anchor movements, if any, shall be applied to the pipe-soil model to obtain forces and moments throughout the system.

Step-6. The anticipated seismic movements, if any, shall be applied to the pipe-soil model to obtain forces and moments throughout the system.

Step-7. The results of Steps 4, 5, and 6 shall be combined by SRSS, at each point along the piping system to obtain resultant forces and moments.

Step-8. The resultant forces and moments shall be evaluated as follows:

(a) The axial stresses in pipe, fittings and fused joints shall comply with the requirements of 3051.

(b) Alternatively, the seismic induced strain shall be determined as follows:

$$(\varepsilon_a)_{Earthquake} = [\ |\sigma_E| + |\nu\,(PD / 2t)|\ ] / E$$

Where:

$(\varepsilon_a)_{Earthquake}$ = Strain in the pipe from earthquake wave computer analysis

This strain, $(\varepsilon_a)_{Earthquake}$ shall be limited to the values listed in Table A-1, where k is defined in Table 3035-2

Table A-1 Seismic Strain Limits

DR	Allowable Strain
DR ≤ 13.5	0.025 x k
13.5 < DR ≤ 21	0.020 x k
DR > 21	0.017 x k

SUPPLEMENT 4

FORMS

1. Form NM(PE) -2 Data Report for Non-Metallic Batch Produced Products

2. Form QF-200 Fusion Procedure Specification (FPS)

3. Form QF-300 Fusion Machine Operator Qualification (FPQ)

FORM NM(PE)-2 DATA REPORT FOR NON METALLIC BATCH PRODUCED PRODUCTS REQUIRING FUSING

As required by the Provisions of the ASME Section III, Division 1, Code and Code Case N-755

1. Manufactured by _____
(Name and address of Manufacturer of Non Metallic products)

2. Manufactured for _____
(Name and address of purchaser)

3. a) Identification- Certificate Holder's Serial No. _____
(Lot No., Batch No., etc.) (Print string)

_____
(Nat'l Board No.) (yr. mfg.)

b) Owner _____

4. Manufactured according to Mat'l Spec. _____ Purchase Order No. _____
(ASTM)

5. Remarks:

_____
(Brief Description of Fabrication)

_____

_____

CERTIFICATE OF COMPLIANCE

We certify the statements made in this report are correct and the products defined in this report conform to the requirements of the ASME Material specification listed above on line 4. The Certified Material Batch Reports provided for the material covered by this report.

Date _____, 20__ Signed _____ By _____

ASME Certificate of Authorization (NA if Owner) No. _____ to use the _____ Symbol expires _____
(Date)

CERTIFICATE OF INSPECTION

I, the undersigned, holding a valid commission issued by the National Board of Boiler and Pressure Vessel Inspectors and the State or Province of _____ and employed by _____

of _____ have inspected the products described in this Partial Data Report product in accordance with the ASME Section III, Division 1, Code and Code Case N-755.

By signing this certificate, neither the Inspector nor his employer makes any warranty, expressed or implied, concerning the product described in this Partial Data Report. Furthermore, neither the Inspector nor his employer shall be liable in any manner for any personal injury or property damage or a loss of any kind arising from or connected with this inspection.

Date _____ 20__

	Commissions	
(Inspector's Signature)		National Board, State, Province and No.

*Supplemental sheets in form of lists, sketches or drawings may be used provided (1) size is 8 1/2 in. x 11 in. (2) information on items 1-4 on this Data Report is included on each sheet, and (3) each sheet is numbered and number of sheets is recorded at the top of this form.

This form may be obtained from the Order Dept., ASME Three Park Avenue, New York, N.Y. 10016-5990.

ASME CC N-755	FUSION PROCEDURE SPECIFICATION

title:

Prepared by:	Date:	Approved by:	Date:

MATERIAL:

FUSION MACHINE INFO:

DATA ACQ. MFGR:

DATA ACQ. ATTACHED:

FUSION INTERFACIAL PRESSURE:

HEATER SURFACE TEMPERATURE:

FUSION DRAG PRESSURE:

FUSION PRESSURE:

BEAD - UP SIZE

HEATER REMOVAL TIME:

COOL TIME & FUSION PRESSURE:

TECHNIQUE:

FORM QF-200

FORM QF-300

FUSION MACHINE OPERATOR PERFORMANCE QUALIFICATION (FPQ) TEST FORM

ASME CODE CASE N-755

Operator's Name_____ **Payroll No.**_____ **Stamp I.D.**_____

Lab Test No._____ **Test: Qualification** _____ **Requalification** _____
Fusion Machine Manufacturer _____
Fusion Machine Pipe Size Range _____
Test Position _____
Material Specification _____ **to** _____
Fusion Specification Procedure _____
Pipe Size _____ **Pipe DR** _____

NDE Requirements: Visual _____ **Visual Results** _____
Free Bend Test _____ Bend Tests Results _____
Data Acquisition Record Review Results _____

Test Conducted By _____

We certify that the statements in this record are correct and that the fused joints are prepared, fused and tested in accordance with the requirements of Supplement 9, of CC N-755.

Date _____ **Signed By** _____
Title

_____

SUPPLEMENT 5

FUSION BEAD CONFIGURATION

The following page contain pictures of critical attributes of the completed thermal fusion butt joints. These pictures may be used by personnel performing a visual examination on fusion beads. These figures are only to be used as a guide.

Butt Fusion of Pipe
Unacceptable Appearance – Insufficient Melt

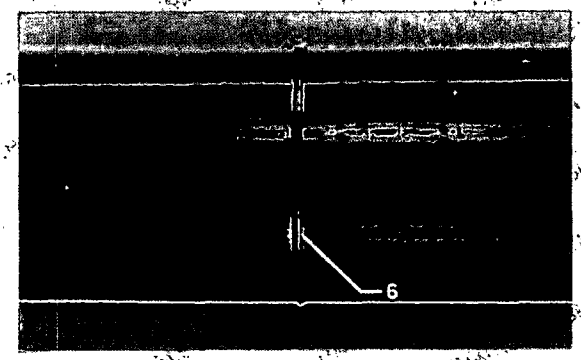

6. Melt Bead Too Small For 2-Inch And Larger Mains

Butt Fusion of Pipe
Unacceptable Appearance – Inadequate Roll Back

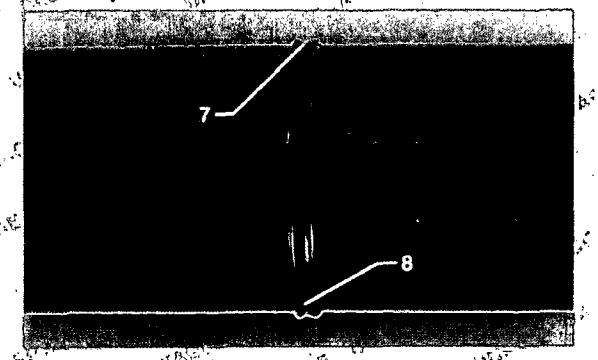

7. Insufficient Fusion Pressure – "V" Shaped Melt Appearance
8. Inadequate Roll Back of Bead

Butt Fusion of Pipe
Unacceptable Appearance – Improper Alignment

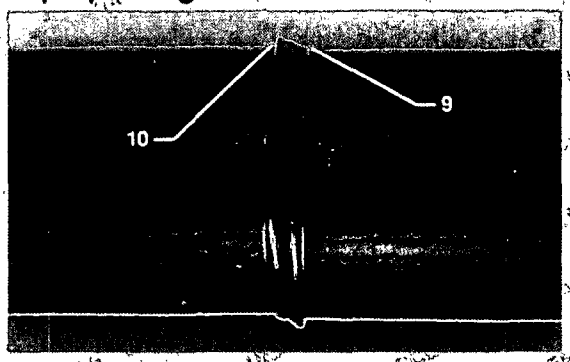

9. "High-Low" Condition
10. Inadequate Roll Back Of Bead Due To Improper Alignment

Butt Fusion of Tubing
Unacceptable Appearance

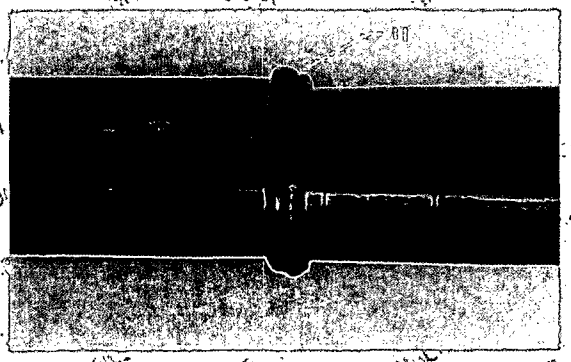

11. Excessive Melt, Improper Alignment And/Or Excessive Pressure

Butt Fusion of Pipe
Unacceptable Appearance – Incomplete Face Off

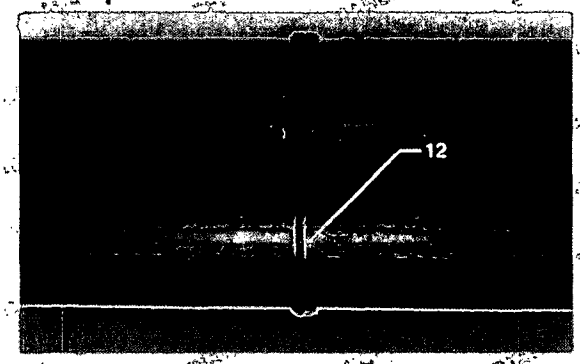

12. No Melt Bead Caused By Incomplete Face Off

Butt Fusion of Pipe
Unacceptable Appearance – Incomplete Face Off

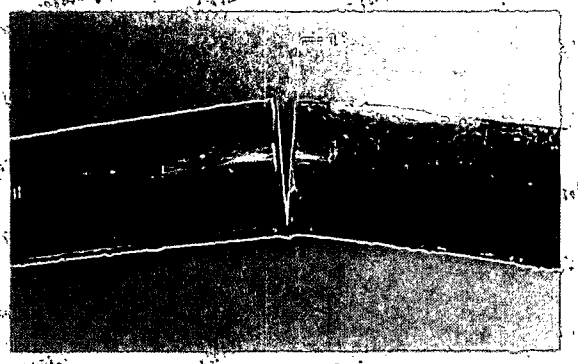

13. Unbonded Area In Joint Of Cut Strap

SUPPLEMENT 9

POLYETHYLENE PIPE FUSING

1. Article I -- Fusion General Requirements

1. Article II -- Fusion Procedure Qualifications

2. Article III -- Fusion Performance Qualification

3. Appendixes

   Non-mandatory Appendix A -- Fusion Machine Operator Qualification Training

   Non-mandatory Appendix B -- Data Acquisition Log Review

ARTICLE I
FUSION GENERAL REQUIREMENTS

QF-100 GENERAL

Supplement 9 of this Case relates to the qualification of fusion machine operators and the procedures that they employ in fusing polyethylene (PE) piping. Due to the major differences between metallic welding and plastic fusing, the Fusion Procedure Specification (FPS) and the Procedure Qualification Record (PQR) have been combined for this supplement.

QF-101 Scope

The requirements in this supplement apply to the preparation of the Fusion Procedure Specification (FPS), and the qualification of fusion machine operators for thermal butt fusion joining.

QF-102 Terms and Definitions

Some of the more common terms relating to fusion are defined in Supplement 1, and ASTM F412-01a Standard Terminology Relating to Plastic Piping Systems,

QF-103 Responsibility

QF-103.1 Fusion. Each manufacturer or contractor is responsible for the fusing done by his organization and shall conduct the tests required in this Supplement to qualify the procedures he uses in the production of the fused joints made for this Case (Article II), and the performance of fusion machine operators who use these procedures (Article III).

QF-103.2 Records. Each manufacturer or contractor shall maintain a record of the results obtained in the fusing procedure and fusion machine operator performance qualifications. These records shall be certified by the manufacturer or contractor and shall be accessible to the Authorized Nuclear Inspector.

QF-104 Documents

QF-104.1 A FPS is a written document that provides direction to the fusion machine operator for making fused joints in accordance with the requirements of this Case. Any manufacturer or contractor that will have responsible operational control of production fusing shall have a FPS that has been qualified by that manufacturer or contractor in accordance with Article II of this supplement.

(a) The FPS specifies the conditions under which the fusing must be performed. These conditions include the PE materials that are permitted. Such conditions are referred to in this Supplement as fusing "essential variables." When a FPS is to be prepared by the manufacturer or contractor, it shall address these essential variables.

(b) The purpose for the qualification of a FPS is to determine that the fused joint proposed for construction is capable of providing the required properties for its intended application. FPS qualification establishes the properties of the fused joint, not the skill of the fusion machine operator.

QF-104.2 In performance qualification, the basic criterion established for fusion machine operator qualification is to determine the operator's ability to operate the fusing equipment to produce a sound fused joint.

QF-105 Joint Orientation

The orientation of all fused butt joints produced for tests or production shall be made with the horizontal axis position illustrated in Figure QF-105.

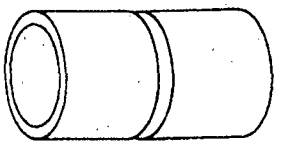

Horizontal Axis Position

Figure QF - 105

QF-106 Training

(a) Thermal Butt Joint - Each fusion machine operator will receive a minimum of 24 hours of training, covering the principles of the fusion process and the operation of the fusion equipment. There will be a two part test at the end of this training; Part 1 Theoretical Knowledge and Part 2 Performance Qualification.

(1) The theoretical test shall cover as a minimum; safety, fundamentals of the fusing process, and recognition of typical joint imperfections.

(2) Performance Qualification test using an approved FPS.

(b) Appendix A to this supplement provides guidance for a training program.

QF-120 EXAMINATIONS

QF-121 Visual Examination. All fused joints shall receive a visual examination. The examination shall include all accessible surfaces of the fused joint and shall meet the following criteria;

(a) Joints shall exhibit proper fusion bead configuration, see Supplement 5.

(b) There shall be no evidence of cracks or incomplete fusion.

(c) Joints shall not be visually mitered (angled, off-set). The ovality offset shall be less than 10% of the minimum wall thickness of the fused components.

(d) The cleavage between fusion beads shall not extend to or below the outside diameter pipe surface (see Figure QF–121-1).

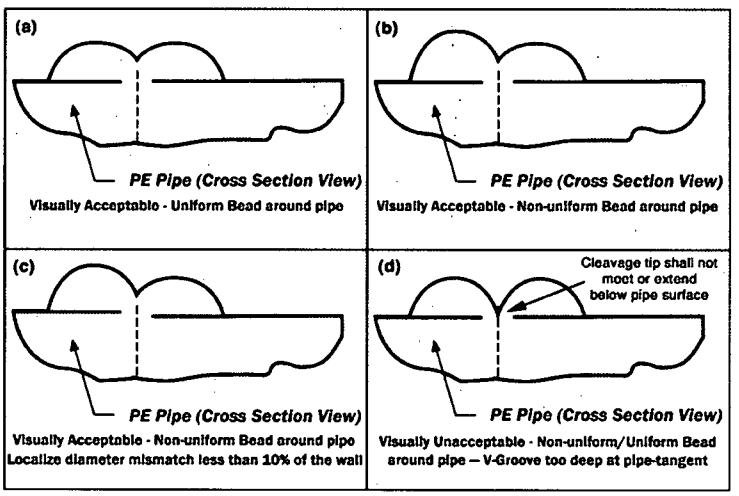

FIGURE QF-121-1

(e) Review the data acquisition record for the joint and compare it to the Fusion Procedure Specification (FPS) to ensure the proper parameters and procedures were followed in making the fused joint, see paragraph QF-122.

QF-122 Data Acquisition Record Evaluation.

QF-122.1 Data Acquisition Device

(a) The data recording device must be capable of recording the following butt fusion essential variables on each joint:

1) Heater Surface temperature
2) Interfacial Pressure
3) Gauge Pressure during the heat cycle

4) Gauge Pressure during the fusion/cool cycle
5) Time during the heat cycle
6) Time during the fusion/cool cycle
7) Heater removal time

(b) All job information related to the joints such as job number, joint number, employee number, time, date, fusion machine identification, pipe manufacturer and pipe material

(c) The data recording device must be capable of storing at least (1) day of butt fusion joint information and capable of downloading this information as a permanent record.

QF-122.2 Data Acquisition Log Evaluation

The butt fusion joint record should be compared to the FPS to ensure that the proper butt fusion parameters and procedures were followed. If they were not, the joint should be cut and re-fused using the correct parameters and procedures per the FPS. A example of a Data Acquisition Log review is provided in Appendix B of this Supplement.

(a) Verify that all job related data was entered in the record.

(b) Verify that the recorded "Fuse" interfacial pressure was within the range of qualification.

(c) Verify that the heater surface temperature recorded was within the range of qualification.

(d) Verify that the Drag Pressure was recorded.

(e) The examiner must calculate the fusion pressure for the fusion machine and add the drag pressure to confirm the machine's hydraulic fusion gauge pressure. This fusion gauge pressure must be shown in the recorded pressure/time diagram at the initial heater contact and during the fusion/cool cycle.

(f) Verify that the fusion gauge pressure dropped quickly to a value less than or equal to the drag pressure at the beginning of the heat soak cycle.

(g) At the end of the heat soak cycle, review that the machine was opened, the heater removed and the pipe ends brought together at the fusion gauge pressure as quickly as possible (not to exceed allowance in procedure).

(h) Verify that the machine fusion gauge pressure was within the range of qualification for the pipe diameter being fused. Observe that the data recording device stopped logging at the end of the fusion / cool cycle.

QF-130 Tests

QF-131 High Speed Tensile Impact Test.

QF-131.1 Significance and Use

This test method is designed to impart tensile impact energy to a butt fused plastic pipe specimen. The failure mode (brittle or ductile) are used as criteria in the evaluation of the butt fusion joint.

QF-131.2 Test Specimens

(a) The test specimen shall conform to the dimensions shown in Figure QF-131.2. Test specimens of butt fused pipe shall have the bead remain on the outside and inside. Test specimens of butt fused pipe shall use the full wall thickness.

(b) Preparation—Test specimens shall be prepared by machining operations on butt fused sections of pipe and on the pipe itself. The machining operations shall result in a smooth surface on both sides of the reduced area with no notches or gouges.

(c) All surfaces of the specimen shall be free of visible flaws, scratches, or imperfections. Marks left by coarse machining operations shall be carefully removed with a fine file or abrasive, and the filed surfaces shall then be smoothed with abrasive paper (600 grit or finer). The finishing sanding strokes shall be made in a direction parallel to the longitudinal axis of the test specimen. In machining a specimen, undercuts that would exceed the dimensional tolerances shall be avoided.

(d) When marking the specimens, use a permanent marker of a color that will be easily read or etch the specimen number in the area outside the hole.

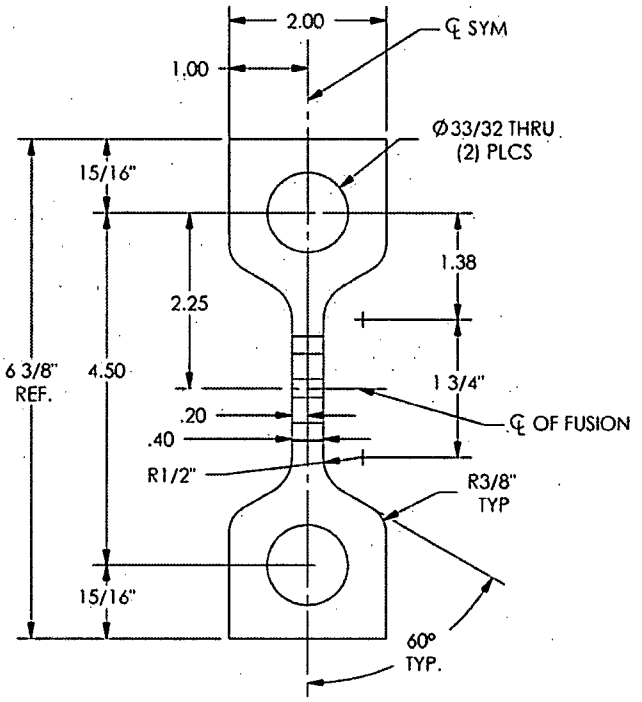

NOTES:

1. ALL MACHINED SURFACES 125 RMS OR BETTER

Tensile Full Thickness Impact Test Coupon Configuration

Figure QF-131.2

QF-131.3 Number of Test Specimens

Test at least four specimens from butt fused pipe sections 90° apart for pipe sizes 4" and larger. Test two specimens from butt fused pipe sections 180° apart for pipe sizes 2" to 4".

QF-131.4 Speed of Testing The speed of testing shall be in accordance with Table QF-131.4

Wall Thickness	Testing Speed
≤1.25 in. (32 mm)	6 in./s (152 mm/s)
>1.25 in. (32 mm)	4 in./s (102 mm/s)

Testing Speed Tolerance: +5 in./s to -1 in./s (+12.7 mm/s to -25.4 mm/s)

TABLE QF-131.4

QF-131.5 Conditioning

(a) Conditioning—Condition the test specimens at 73.4 ± 4°F [23 ± 2°C] for not less than 1 hour prior to test.

(b) Test Conditions—Conduct the tests at 73.4 ± 4°F [23 ± 2°C] unless otherwise specified by contract or the relevant ASTM material specification.

QF-131.6 Test Procedure

(a) Set up the machine and set the speed of testing to the proper rate as required in QF-131.4

(b) Pin each specimen in the clevis tooling of the testing machine. This will align the long axis of the specimen and the tooling with the direction of pull of the machine.

(c) Determine the mode of failure and note in the report.

QF-131.7 Acceptance Criteria

Failure mode shall be ductile.

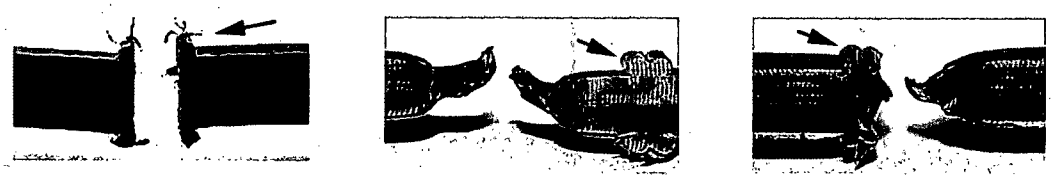

Figure A
Brittle Failure

Figure B
Ductile Failure
Outside Fusion Interface

Figure C
Ductile Failure
Adjacent to Fusion Interface

NOTE: ◄——— **Denotes Fusion Bead**

FIGURE QF-130.7 Tensile Test Sample Evaluation Sample

QF-132 Elevated Temperature Sustained Pressure Tests.

QF-132.1 Specimens

Butt fuse (2) pieces of 8" IPS DR 11 PE 3408/PE 4710 pipe x 40" long using the FPS outlined in this Supplement and perform the elevated temperature sustained pressure tests specified in ASTM D-3055-03a.

QF-133 FREE BEND TESTS

QF-133.1 Specimens

Two bend specimens as shown in Figure 133.1 shall be removed from the joint approximately 180° apart.

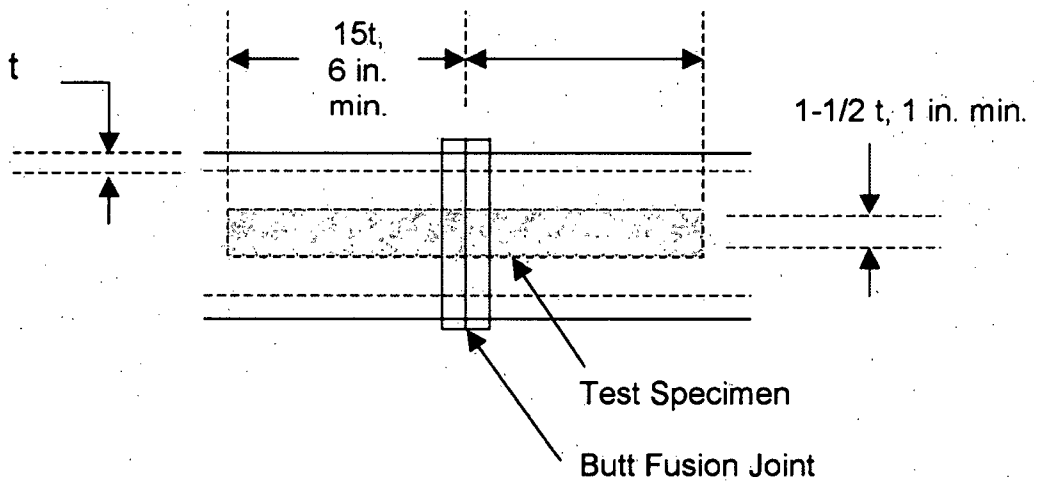

FIGURE QF-133.1

QF-133.2 Testing Procedure

One test specimen shall be bent so that the inside surface of the joint is in tension and the other shall be bent so that the outside surface of the joint is in tension. The ends of each specimen shall be brought together until the ends of the specimens touch.

QF-133.3 Acceptance Criteria

The specimens shall not crack or fracture.

ARTICLE II

FUSION PROCEDURE QUALIFICATIONS

QF-200 GENERAL

QF-201 Each manufacturer or contractor shall prepare written Fusion Procedure Specifications that are defined as follows:

(a) Fusion Procedure Specification (FPS). A FPS is a written qualified fusing procedure prepared to provide direction for making production fused joints to this Case requirements. The FPS shall be used to provide direction to the fusion machine operator to assure compliance with the Case requirements.

(b) Contents of the FPS. The completed FPS shall describe all of the essential variables for each fusion process used in the FPS. These essential variables are listed and defined in QF-220. The manufacturer or Contractor may include any other information in the FPS that may be helpful in making a fused joint.

(c) Changes in essential variables require requalification of the FPS

(d) Format of the FPS. The information required to be in the FPS may be in any format, written or tabular, to fit the needs of each manufacturer or Contractor, as long as every essential variables outlined in QF-220 is included or referenced. Form QF-200 has been provided as a guide for the FPS. This Form includes the required data for the fusing, it is only a guide and is located in Supplement 4.

(e) Availability of the FPS. A FPS used for production fusing shall be available for reference and review by the Authorized Nuclear Inspector at the fabrication or installation site.

QF-210 Manufacturer's or Contractor's Responsibility

(a) Each manufacturer or Contractor shall list the parameters applicable to fusing that he performs in construction of fusion joints made in accordance with this Case. These parameters shall be listed in a document known as a Fusion Procedure Specification (FPS).

(b) Each manufacturer or Contractor shall qualify the FPS by the fusing of test coupons, testing of specimens cut from the test coupons, and recording fusing data and test results in the FPS. The fusion machine operators used to produce the fused joints to be tested for qualification of procedures shall be under the full supervision

and control of the manufacturer or Contractor during the production of these test fused joints. The fused joints to be tested for qualification of procedures shall be fused either by direct employees or by individuals engaged by contract for their services as fusion machine operators under the full supervision and control of the manufacturer or Contractor. It is not permissible for the manufacturer or Contractor to have the supervision and control of fusing of the test fused joints performed by another organization. It is permissible, however to subcontract any or all of the work of preparation of test material for fusing and subsequent work on preparation of test specimens from the completed fused jointment, performance of nondestructive examination, and mechanical tests, provided the manufacturer or Contractor accepts the responsibility for any such work.

(c) This Case recognizes a manufacturer or Contractor as the organization which has responsible operational control of the production of the fusion joints to be made in accordance with this Case. If in an organization effective operational control of fusing procedure qualification for two or more companies of different names exists, the companies involved shall describe in their Quality Control system/Quality Assurance Program, the operational control of procedure qualifications. In this Case separate fusion procedure qualifications are not required, provided all other requirements of this Supplement are met.

(d) The manufacturer or Contractor shall certify that he has qualified each Fusion Procedure Specification.

QF-220 FUSION PROCEDURE SPECIFICATION (FPS)

QF-221 STANDARD FUSION PROCEDURE SPECIFICATION

(a) The Standard Fusion Procedure Specification is based on standard industry practice and testing as reported in the Plastic Pipe Institute (PPI), report TR-33/2001,

(b) When the FPS is limited to the following parameters, qualification testing is not required. If the manufacturer or contractor deviates from the conditions listed below, procedure qualification testing in paragraph QF-223 shall be performed.

(1) The pipe is limited to the horizontal position, ±45°.

(2) The pipe ends shall be faced to establish clean, parallel mating surfaces that are perpendicular to the pipe centerline on each pipe end. When the ends are brought together, there shall be no visible gap.

(3) The external surfaces of the pipe are aligned to within 10% of the pipe wall thickness.

(4) The drag pressure shall be measured and recorded. The fusion pressure shall be calculated so that an interfacial pressure of 60 to 90 psi is applied to the pipe ends.

(5) The heater plate surface temperature shall be 400 to 450°F measured at 4 locations approximately 90° apart.

(6) The heater plate shall be inserted into the gap between the pipe ends and fusion pressure shall be applied and maintained until an indication of melt is observed around the circumference of the pipe. The pressure shall be reduced to drag pressure and the fixture shall be locked in position so that no outside force is applied to the joint during the soak time.

(7) The ends shall be held in place until the following bead size is formed between the heater faces and the pipe ends, shown in Table QF-221(a)-1.

Approximate Melt	
Pipe Size (Dia) inches	**Bead Size inches**
≤ 1 1/4	1/32 to 1/16
> 1 1/4 to < 3	1/16
≥ 3 to ≤ 8	1/8 to 3/16
> 8 to ≤ 12	3/16 to 1/4
> 12 to ≤ 24	1/4 to 7/16
> 24 to ≤ 36	7/16
> 36 to ≤ 54	9/16

TABLE QF-221(a)-1

(8) After the proper bead size is formed, machine shall be opened and the heater removed. The pipe ends shall be brought together and the fusion pressure reapplied.

(9) The maximum time from removal of the heating plate until the pipe ends are pushed together shall not exceed the time given in Table QF-221(a)-2.

Pipe Wall Thickness (inches)	Max. Heater Plate Removal Time
.20 to .36	8 sec.
.36 to .55	10 sec.
.55 to 1.18	15 sec.
1.18 to 6.0	20 sec.

TABLE QF-221(a)-2

(10) The pressure is maintained until the joint has cooled to the touch, after which the pipe may be removed from the joining machine. Handling of the pipe shall be minimized for an additional 30 minutes.

QF-222 Essential variables for Fusion Procedure Specifications (FPS).

Any change in the essential variables listed below and QF –221, requires requalification of the FPS per QF –223.

(a) Essential Variables

(1) The pipe material,

(2) Heater surface temperature range,

(3) Butt fusion interfacial pressure range,

(4) Fusion pressure,

(5) Heater bead up size,

(6) Heater removal time,

(7) Cool-down time under fusion pressure

QF-223 Testing Procedure to Qualify the FPS

(a) Use 8" IPS HDPE DR11 pipe sizes in qualification test joints.

(b) Make the following butt fusion joints using the following combinations of heater temperature ranges and interfacial pressure ranges and the FPS:

(1) High heater surface temperature and high interfacial pressure, (5) joints
(2) High heater surface temperature and low interfacial pressure, (5) joints

(3) Low heater surface temperature and high interfacial pressure, (5) joints
(4) Low heater surface temperature and low interfacial pressure, (5) joints

(c) Evaluate (3) joints of each combination using the High Speed Tensile Impact Tests per QF-131. All joints must fail in a ductile mode.

(d) Evaluate (2) joints of each combination using the Sustained Pressure Testing per QF-132. All joints must pass this test.

QF-230 Mechanical Tests.
QF-231 General Requirements

(a) The type and number of test specimens that shall be tested to qualify a butt FPS are given in QF-223, and shall be removed in a manner similar to that shown in QF-130. If any test specimen required by QF-223 fails to meet the applicable acceptance criteria, the test coupon shall be considered as failed.

(b) When it can be determined that the cause of failure is not related to fusing parameters, another test coupon may be fused using identical fusing parameters.

(c) Alternatively, if adequate material of the original test coupon exists, additional test specimens may be removed as close as practicable to the original specimen location to replace the failed test specimens.

(d) When it has been determined that the test failure was caused by an essential variable. a new test coupon may be fused with appropriate changes to the variable(s) that was determined to cause the test failure.

(e) When it is determined that the test failure was caused by one or more fusing conditions other than essential variables, a new set of test coupons may be fused with the appropriate changes to the fusing conditions that were determined to cause the test failure. If the new test passes, the fusing conditions that were determined to cause the previous test failure shall be addressed by the manufacturer to ensure that the required properties are achieved in the production fused joint.

QF-232 Preparation of Test Coupon

The base materials shall consist of pipe. The dimensions of the test coupon shall be sufficient to provide the required test specimens.

ARTICLE III

FUSION PERFORMANCE QUALIFICATION

QF-300 GENERAL

QF-300.1 This Article lists the essential variables that apply to fusion machine operator performance qualifications.

The fusion machine operator qualification is limited by the essential variables.

QF-300.2

(a) The basic premises of responsibility in regard to fusion are contained within QF-103 and QF-301.2. These paragraphs require that each manufacturer or contractor (an assembler or an installer is to be included within this premise) shall be responsible for conducting tests to qualify the performance of fusion machine operators in accordance with qualified Fusion Procedure Specifications, which his organization employs in the construction of fused joints built in accordance with this Supplement. The purpose of this requirement is to ensure that the manufacturer or contractor has determined that his fusion machine operators using his procedures are capable of developing the minimum requirements specified for an acceptable fused joint. This responsibility cannot be delegated to another organization.

(b) The fusion machine operators used to produce such fused joints shall be tested under the full supervision and control of the manufacturer or contractor during the production of these test fused joints. It is not permissible for the manufacturer or contractor to have the fusing performed by another organization. It is permissible, however, to subcontract any or all of the work of preparation of test materials for fusing and subsequent work on the preparation of test specimens from the completed fused joints, performance of nondestructive examination and mechanical tests, provided the manufacturer, contractor, assembler, or installer accepts full responsibility for any such work.

(c) This Supplement recognizes a manufacturer or contractor as the organization which has responsible operational control of the production of the fused joints to be made in accordance with this Supplement. If in an organization effective operational

control of the fusion machine operator performance qualification for two or more companies of different names exists, the companies involved shall describe in the Quality Control system, the operational control of performance qualifications. In this Supplement requalificatibon of fusion machine operators within the companies of such an organization will not be required, provided all other requirements of this Supplement are met.

(d) The Supplement recognizes that manufacturers or contractors may maintain effective operational control of fusion machine operator Performance Qualification (FPQ) records under different ownership than existed during the original fusion machine operator qualification. When a manufacturer or contractor or part of a manufacturer or contractor is acquired by a new owner(s), the FPQ may be used by the new owner(s) without requalification, provided all of the following are met:

(1) new owner(s) takes responsibility for the FPQ,
(2) FPQ reflect the name of the new owner(s), and
(3) Quality Control System/Quality Assurance Program reflects the source of the FPQ as being from the former manufacturer or contractor

QF-300.3 More than one manufacturer or contractor may simultaneously qualify one or more fusion machine operators. When simultaneous qualifications are conducted, each participating organization shall be represented during fusing of test coupons by an employee who is responsible for fusion machine operator performance qualification.

The fusion procedure specifications (FPS) that are followed during simultaneous qualifications shall be compared by the participating organizations. The FPSs shall be identical for all the essential variables. The qualified thickness ranges for base material need not be identical, but these thicknesses shall be adequate to permit fusing of the test coupons. Alternatively, the participating organizations shall agree upon the use of a single FPS provided each participating organization has a FPS covering the range of essential variables to be followed in the performance qualification. When a single FPS is to be followed, each participating organization shall review and accept that FPS.

Each participating organization's representative shall positively identify each fusion machine operator who is being tested. Each organizational representative shall also verify marking of the test coupon with the fusion machine operator's identification.

Each organization's representative shall perform a visual examination of each completed test coupon and shall examine each test specimen to determine its acceptability. Alternatively, after visual examination, when the test coupon(s) are prepared and tested by an independent laboratory, that laboratory's report may be used as the basis for accepting the test results.

Each organizational representative shall complete and sign a Fusion machine operator Performance Qualification (FPQ) Record for each fusion machine operator. Form QF-200 has been provided as a guide for the FPS.

When a fusion machine operator changes employers between participating organizations, the employing organization shall verify that the fusion machine operator's continuity of qualifications has been maintained as required by QF-322 by previous employers since his qualification date. If the fusion machine operator has had his qualification withdrawn for specific reasons, the employing organization shall notify all other participating organizations that the fusion machine operator's qualification(s) has been revoked in accordance with QF-322.1 (b). The remaining participating organizations shall determine that the fusion machine operator can perform satisfactory work in accordance with this Supplement.

When a fusion machine operator's qualifications are renewed in accordance with the provisions of QF-322.2, each renewing organization shall be represented by an employee who is responsible for fusion machine operator performance qualification. The testing procedures shall follow the rules of this paragraph.

QF-301 Tests

QF-301.1 Intent of Tests. The performance qualification tests are intended to determine the ability of fusion machine operators to make sound fused joints.

QF-301.2 Qualification Tests. Each manufacturer or contractor shall qualify each fusion machine operator for the fusing process to be used in production. The performance qualification test shall be fused in accordance with qualified Fusion Procedure Specifications (FPS). Changes beyond which requalification is required are given in QF-322. Allowable visual and mechanical examination requirements are described in QF-303. Retests and renewal of qualification are given in QF-320.

The fusion machine operator who prepares the FPS qualification test coupons meeting the requirements of QF-200 is also qualified within the limits of the performance qualifications, listed in QF-303 for fusion machine operators.

The performance test may be terminated at any stage of the testing procedure, whenever it becomes apparent to the supervisor conducting the tests that the fusion machine operator does not have the required skill to produce satisfactory results.

QF-301.3 Identification of Fusion machine operators. Each qualified fusion machine operator shall be assigned an identifying number, letter, or symbol by the manufacturer, contractor or manufacturer or Contractor, which shall be used to identify the work of that fusion machine operator.

QF-301.4 Record of Tests. The record of Fusion machine operator Performance Qualification (FPQ) tests shall include the essential variables, the type of test and test results, and the ranges qualified in accordance with Form QF-300 for each fusion machine operator.

QF-302 Type of Test Required

QF-302.1 Mechanical Tests. All mechanical tests shall meet the requirements prescribed in QF-133.

QF-302.2 Test Coupons in Pipe. For test coupons made on pipe in the horizontal axis position of Figure QF-105. The coupons shall be removed from the test piece in accordance with Figure QF-133.1.

QF-302.3 Visual Examination. For pipe coupons all surfaces shall be examined visually per QF-121 before cutting of bend specimens. Pipe coupons shall be visually examined per QF-121 over the entire circumference, inside and outside.

QF-303 Fusion machine operators

Each fusion machine operator who fuses under the rules of this Supplement shall have passed the mechanical and visual examinations prescribed in QF-302.1 and QF-302.3 respectively.

QF-303.1 Examination. Fused joints made in test coupons for performance qualification shall be examined by mechanical and visual examinations (QF-302.1, QF-302.3).

QF-310 QUALIFICATION TEST COUPONS

QF-310.1 Test Coupons. The test coupons shall be pipe. Qualifications for pipe are accomplished by fusing one pipe assembly in the horizontal axis position (figure QF-105). The minimum pipe size shall be IPS 6.

QF-320 RETESTS AND RENEWAL OF QUALIFICATION

QF-321 Retests

A fusion machine operator who fails one or more of the tests prescribed in QF-303, as applicable, may be retested under the following conditions.

QF-321.1 Immediate Retest Using Visual Examination. When the qualification coupon has failed the visual examination of QF-302.3, retesting shall be by visual examination before conducting the mechanical testing.

When an immediate retest is made, the fusion machine operator shall make two consecutive test coupons all of which shall pass the visual examination requirements.

The examiner may select one of the successful test coupons from each set of retest coupons which pass the visual examination for conducting the mechanical testing.

QF-321.2 Immediate Retest Using Mechanical Testing.

When the qualification coupon has failed the mechanical testing of QF-302.1, the retesting shall be mechanical testing.

When an immediate retest is made, the fusion machine operator shall make two consecutive test coupons which shall pass the test requirements.

QF-321.4 Further Training. When the fusion machine operator has had further training or practice, a new test shall be made.

QF-322 Expiration and Renewal of Qualification

QF-322.1 Expiration of Qualification. The performance qualification of a fusion machine operator shall be affected when one of the following conditions occurs:

(a) When he has not fused with a process during a period of 6 months or more, his qualification, for that process shall expire.

(b) When there is a specific reason to question his ability to make fused joints that meet the specification, the qualifications that support the fusing he is doing shall be revoked.

QF-322.2 Renewal of Qualification

(a) Renewal of qualification expired under QF-322.1(a) may be made by fusing a single test coupon and by testing of that coupon as required by QF-301. A successful test renews the fusion machine operator previous qualifications for the process for which he was previously qualified.

Providing the conditions of QF-303 are satisfied, renewal of qualification under QF-322.1(a) may be done on production work.

(b) Fusion machine operators whose qualifications have been revoked under QF-322.1(b) above shall requalify. Qualification shall utilize a test coupon appropriate to the planned production work. The coupon shall be fused and tested as required by QF-301 and QF-302. Successful test restores the qualification.

QF-330 FUSION ESSENTIAL VARIABLES FOR FUSION MACHINE OPERATORS

QF-331 General

A fusion machine operator shall be requalified whenever a change is made in one or more of the essential variables listed.

(a) A change in pipe diameter from one range to another;

(1) Less than IPS 8,
(2) IPS 8 to IPS 24. and
(3) IPS over 24

(b) A change in name of the manufacturer of equipment

(c) The axis of the pipe is limited beyond the horizontal position ±45°. Qualification in any position other than horizontal qualifies the orientation tested ± 20°.

QF-340 Testing

(a) Test joints shall be 6" IPS minimum. A data acquisition device shall be attached to the fusion machine and the data concerning the joint entered. The data acquisition device shall be used to record data required by QF-122.

(b) The supervisor conducting the test shall observe making of the butt fusion joint and note if the fusion procedure (FPS) was followed.

(c) The completed joint shall be visually examined and meet the acceptance criteria of QF-121.

(d) After the joint is complete, the data acquisition record shall be reviewed by the assessor and compared to the FPS to ensure the proper procedures were followed.

(e) Bend test specimens shall be removed, tested and meet the acceptance criteria in accordance with QF-133.

Non-Mandatory
Appendix A
To
Supplement 9

Fusion Machine Operator Qualification Training

A-1000 SCOPE

(a) The major portion of the quality of PE piping systems is determined by the skills of the fusion machine operators. When installing polyethylene (PE) piping, the quality of the fusion joints is essential for the piping system.

(b) It is important that the fusion machine operators are trained and competent in the fusion technology employed in constructing PE piping systems. Continued competence of the fusion operator is covered by periodic re-training and re-assessment.

(c) This document gives guidance for the training, assessment and approval of fusion operators in order to establish and maintain competency in construction of polyethylene piping systems for pressure applications. The fusion joining technique covered by this Appendix is butt fusion. This article covers both the theoretical and practical knowledge necessary to ensure high quality fusion joints.

A-1100 REFERENCES

(a) Plastics Pipe Institute (PPI) Technical Report TR-33/2005 "Generic Butt Fusion Joining Procedure for Field Joining of Polyethylene Pipe

(b) American Society of Testing and Materials (ASTM) D 2657-03 "Standard Practice for Heat Fusion Joining of Polyolefin Pipe and Fittings"

(c) ISO TR 19480/2005 "Thermoplastics pipes and fittings for the supply of gaseous fuels or water – Guidance for training and assessment of fusion operators"

A-2000 TRAINING

A-2100 Training Course

(a) A trainee fusion operator for PE systems should follow a training course in order to obtain a fusion operator certificate for PE pipes. The course should cover all aspects of the butt fusion process including safety, machine evaluation and maintenance, machine operation, FPS guidelines, pressure and temperature setting, data log device operation and set-up, in-ditch fusion techniques, visual examination guidance, and data log record evaluation. The minimum course duration is 24 hours.

(b) The course will be delivered by a competent qualified trainer with a minimum of 3 years of experience in the butt fusion processes and who has mastered the techniques involved.

(c) The trainer should have a range of fusion machines representative of the equipment encountered on worksites for installing pipes, in order for the trainee fusion operator to become acquainted with the fusion equipment commonly used. The trainee fusion operator may be trained on one of these fusion machines or on a machine from his own company if accepted by the training center. The fusion equipment must comply with the fusion machine manufacturer's specifications and/or ISO 12176-1 "Plastics pipes and fittings — Equipment for fusion jointing polyethylene systems — Part 1: Butt fusion ".

A-2200 Operator Assessment

The trainee fusion operator who has followed a training course as described above should then pass a theoretical and practical assessment in order to be qualified as a fusion operator for PE systems. The assessor should not be the trainer but should have the same assessment qualifications as the trainer shown above.

A-2300 Training Curriculum

(a) The training course should comprise of any combination of fusion packages based on the requirements of utility or pipeline operators. These packages may be given as individual modules or combined to suit requirements. The course shall include safety training related to the fusion process and equipment.

(b) All consumables and tools necessary for the training package should be available during the training session. The pipes and fittings to be used shall conform to the ASTM product forms permitted by this Supplement.

(c) The lessons should be designed so that the trainee fusion operator learns to master the fusion technique and attains a good working knowledge of the piping system materials and practical problems encountered when fusing pipe in the field. The fusion operator should receive a written manual covering all the elements dealt with in the training.

(d) The theoretical course should deal with general information in connection with raw materials, pipes and fittings, and also with theoretical knowledge about preparation, tools, and devices, joining components, different materials, different diameter ratios and correct and incorrect parameters. The safety course should include information concerning the fusion process, such as protective clothing, general safety, regulations for electrical equipment, handling heater plates, etc. Areas of study should include but not be limited to the following:

(1) Butt fusion joining

- Principles of fusion
- Straight/coiled pipes, service lines, main lines, etc.
- Components: pipes, flange adapters saddle fittings, other fittings
- Butt fusion equipment: manual, semi-automatic and automatic machines.
- Joint preparation: Cleaning, rounding, alignment, facing, etc
- Butt fusion cycle: pressure, time and temperature relationships, diagram.
- Failure modes: understanding and avoiding possible screwups
- Test methods: visual examination, high speed tensile-impact test, bending test, hydrostatic test, data log recording / evaluation, etc.

(2) The trainee fusion operator should be familiar with the butt fusion joining technique and procedure (FPS) by making a sufficient number of butt fusion joints. In some cases, the fusion technique may vary slightly according to diameter, material or other factors. In such cases, the trainee fusion operator should also be made familiar with the various techniques.

(3) The trainee should start by making a butt joint between two pipes, and should then learn to make butt fusion joints with pipes and fittings such as tees, reducers, etc.

(4) The trainee should learn how to detect and avoid typical fusion defects.

(5) The trainee should learn how to assess the quality of a butt fusion joint by doing a visual examination of the butt fusion joint and comparing it to the visual guidelines published in the pipe manufacturer's heat fusion joining procedure booklet. The trainee should also compare the data log record to the

FPS to ensure the proper parameters and procedures were followed in the butt fusion process.

A-3000 ASSESSMENT AND TESTING

(a) Training program should end with a theoretical and practical examination (test piece).

(b) The content of the theoretical examination shall consist of not less than (20) multiple choice questions about the butt fusion process, fusion machine operation, pipe, quality examination, safety, etc. within a set period of time. A score of 80% or better is considered passing on this examination. Questions to be included but not limited to are:

How do you calculate the fusion machine gauge pressure?
What is the proper heater surface temperature range from the FPS?
What is the proper butt fusion interfacial pressure range from the FPS?
How do you calculate the drag pressure?
How do you know when to remove the heater in the heating cycle?
How long do you leave the pipe ends together under pressure in the cooling cycle?
What is the difference between IPS pipe and DIPS pipe?
How do I determine the hydraulic fusion machines total effective piston area?
How is the total effective piston area of the fusion machine used to determine the fusion machines gauge pressure for a specific pipe?
How do you adjust the machine to improve the alignment of the pipe after facing?
How much material should be removed from the pipe ends in the facing operation?
How do you determine if the fusion machine conforms to the equipment manufacturer's specifications?
How do you align the pipe in the butt fusion machine?
Can you butt fuse pipe in a ditch?
What is interfacial pressure?

(c) The practical examination will require the trainee fusion operator to make a fusion joint with a hydraulic butt fusion machine with a minimum pipe size of 6" IPS DR11. A data acquisition device must be attached to the fusion machine and the data concerning the joint entered. The data log device shall be used to record the joint made by the trainee. The assessor shall observe the butt fusion joint and note if the proper procedure (FPS) was followed. After the joint is complete, the data log record shall be reviewed by the assessor and compared to the FPS to ensure the proper procedures was followed. The assessor will then conduct a visual

examination of the joint to make sure it satisfies the pipe manufacturers recommend visual guidance criteria per QF-121 of this Supplement.

(d) If a data log device is not available, the assessor will manually record the butt fusion parameters used in the butt fusion process. This should be compared with the FPS to ensure they agree.

(e) Trainee fusion operators who pass the theoretical and practical examination would receive a fusion operator certificate bearing the logo of the assessment center awarding the approval. The fusion operator certificate should state the technique or techniques and fusion machines for which the operator is qualified.

A-4000 REASSESSMENT

If the trainee fails one of the examinations, he should retake it after a period not shorter than one week. If the trainee fails the examination for the second time, the trainee should repeat the training course before taking the test again.

Non-Mandatory
Appendix B
To
Supplement 9

Data Acquisition Log Review

Review both the recorded log information and the pressure/time graph to evaluate if the proper procedure was followed. The following examples are shown to assist in this evaluation:

1) Recorded Data Log Information Correct Procedure

Job Information:		**Recommended Gauge Pressures:**
1. Date and Time:	**01/11/05 03:15:06 PM**	**18. Heat** **:** **30 psi**
2. Joint Number:	**4**	**19. Soak** **:** **-------**
3. Job Number:	**XYZ**	**20. Fuse** **:** **236 psi**
4. Employee No:	**56**	**21. Cool** **:**

		-------
5. Machine I.D.:	**28**	
	6. Machine Model: MMI 28 Combo	**Recorded data:**
7. Piston Area:	**4.71 in2**	**24. Drag Pressure: 30 psi**
8. Pipe Material:	**Perf. Pipe PE 3408**	**25. DataLogger Probe: 426°F**
9. Pipe Size:	**8" IPS DR 17**	**26. External Probe:**

Interfacial Pressures:

12. Heat	**:**	**0 psi**
13. Soak	**:**	**------**
14. Fuse	**:**	**75 psi**
15. Cool	**:**	**------**

NO ERRORS
All Job Information entered
Fuse Interfacial Pressure in range (between 60-90 psi) Heater Surface Temperature in range (between 400-450° F)

2) Incorrect Procedure

Job Information:		**Recommended Gauge Pressures:**
1. Date and Time:	**01/11/05 03:15:06 PM**	**18. Heat** **:** **30 psi**
2. Joint Number:	**4**	**19. Soak** **:** **-------**
3. Job Number:	**XYZ**	**20. Fuse** **:** **195 psi**
4. Employee No:	**56**	**21. Cool** **:** **-------**
5. Machine I.D.:	**28**	
	6. Machine Model: MMI 28 Combo	**Recorded data:**
7. Piston Area:	**4.71 in2**	**24. Drag Pressure: 30 psi**
8. Pipe Material:	**PolyPipe PE 3408**	**25. DataLogger Probe: 475°F**
9. Pipe Size:	**8" IPS DR 17**	**26. External Probe:**

Interfacial Pressures:

12. Heat	**:**	**0 psi**
13. Soak	**:**	**------**
14. Fuse	**:**	**50 psi**
15. Cool	**:**	**------**

ERRORS

Fuse Interfacial pressure out of range (60-90 psi)
Heater Surface Temperature out of range (400-450° F)

3) Incorrect Procedure

Job Information:		**Recommended Gauge Pressures:**
1. Date and Time:	**01/11/05 03:15:06 PM**	**18. Heat** **:** **30 psi**
2. Joint Number:		**19. Soak** **:** **-------**
3. Job Number:	**XYZ**	**20. Fuse** **:** **195 psi**
4. Employee No:		**21. Cool** **:** **-------**
5. Machine I.D.:	**28**	
	6. Machine Model: MMI 28 Combo	**Recorded data:**
7. Piston Area:		**24. Drag Pressure: 30 psi**
8. Pipe Material:	**PolyPipe PE 3408**	**25. DataLogger Probe: 400°F**
9. Pipe Size:	**8" IPS DR 17**	**26. External Probe:**

Interfacial Pressures:

12. Heat	**:**	**0 psi**
13. Soak	**:**	**------**
14. Fuse	**:**	**90 psi**
15. Cool	**:**	**------**

ERRORS

Parameters in the proper range but important job information missing: joint number, employee number, and piston area.

4) Pressure/Time Graph Evaluation

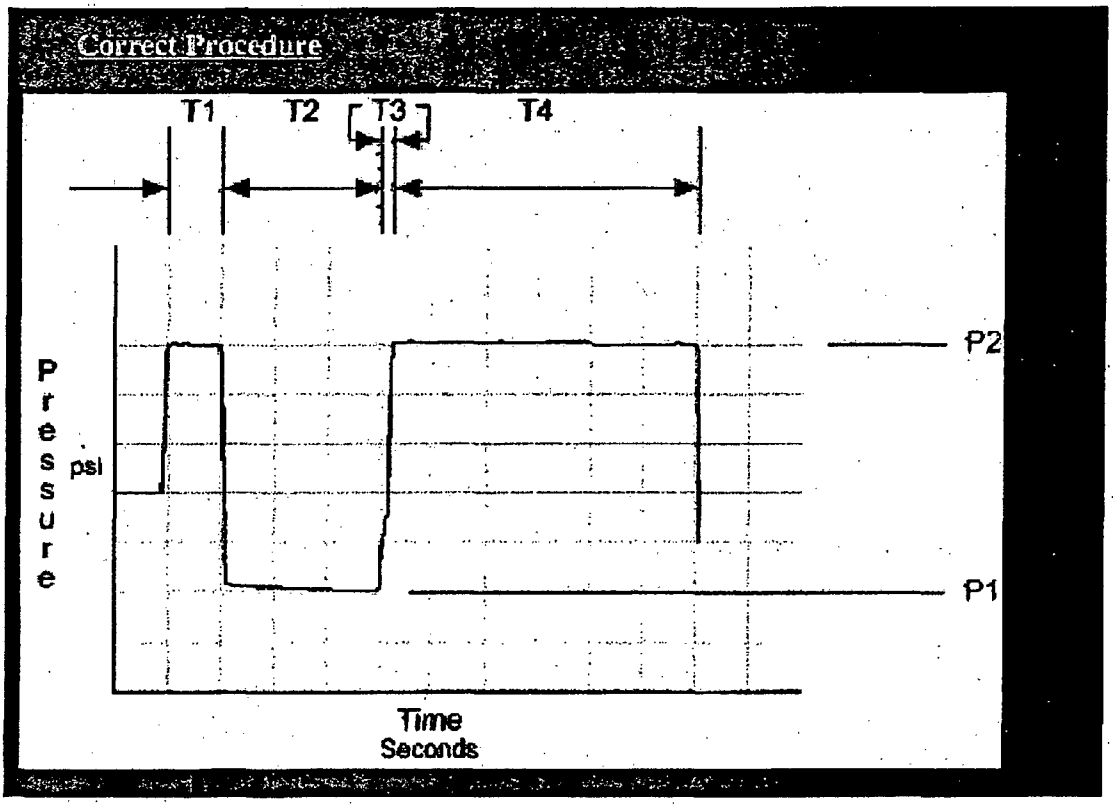

Typical Time / Pressure Diagram of a Butt Fusion Joint

P1 – Drag Pressure (Fusion machine mechanical drag plus pipe drag) Pressure may drop to (0) psi during soak cycle (psi gauge)
P2 – Fusion Pressure (Calculated machine fusion gauge pressure plus drag pressure) T1 – Initial Heater Contact Time at Fusion Pressure (Time required to observe an indication of melt around the pipe circumference)
T2 – Heat Soak Time (Time required to develop the size of melt bead against the heater specified in the procedure).
T3 – Heater Removal Time – (Time required to open the fusion machine, remove the heater and bring the pipe ends together at fusion pressure. The time must not exceed the time in the specification)
T4 – Cool Time – (Time required to cool the joint at fusion gauge pressure. This must be 30-90 seconds per inch of pipe diameter. Use 90 seconds per inch of pipe diameter for any pipe diameter with a wall thickness greater than 1.50")

NO ERRORS

5) Correct Procedure

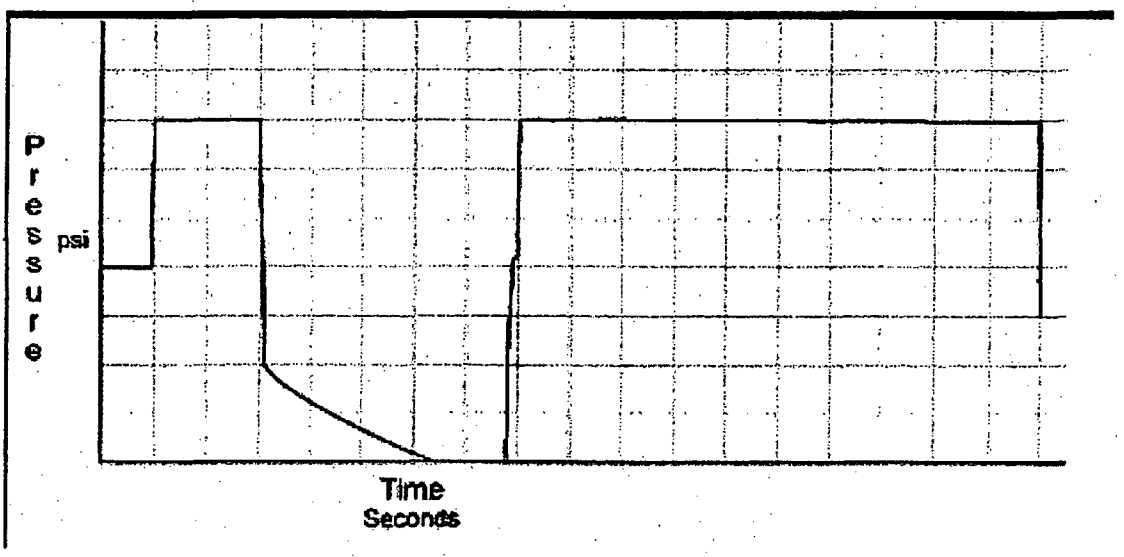

Review if P1 and P2 recorded gauge pressures agree with the specified fusion procedure. P2 can drop to zero during the heat soak cycle.

Review if P2 is maintained for 30-90 seconds per inch of pipe diameter during the Fuse/Cool cycle.

On large diameter, heavy wall pipe, it sometimes takes several minutes to see an indication of melt around the circumference of the pipe, so the initial contact time against the heater at fusion gauge pressure is usually be longer than normal. Make sure the Heat Soak Time is longer than the Initial Contact Time.

6) Incorrect Procedure

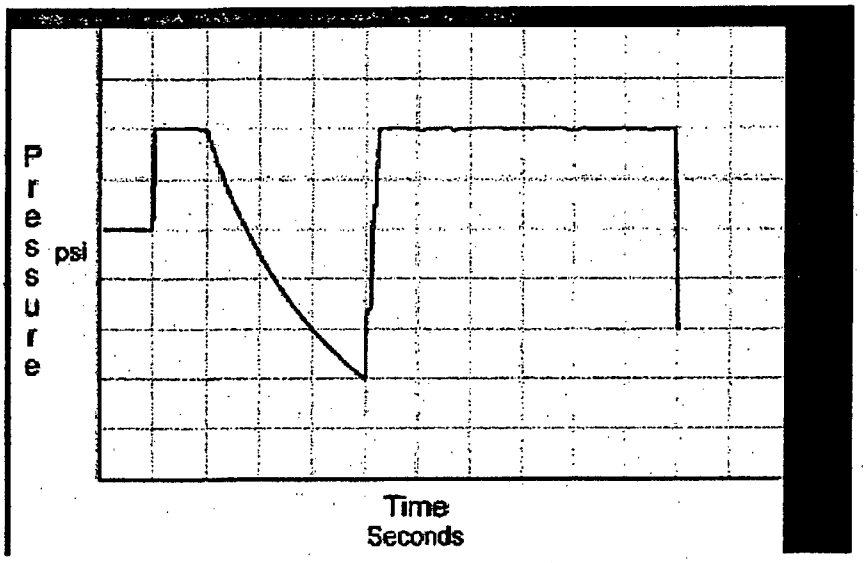

No Heat Soak Time – Pressure not reduced at start of Heat Soak Cycle

7) Incorrect Procedure

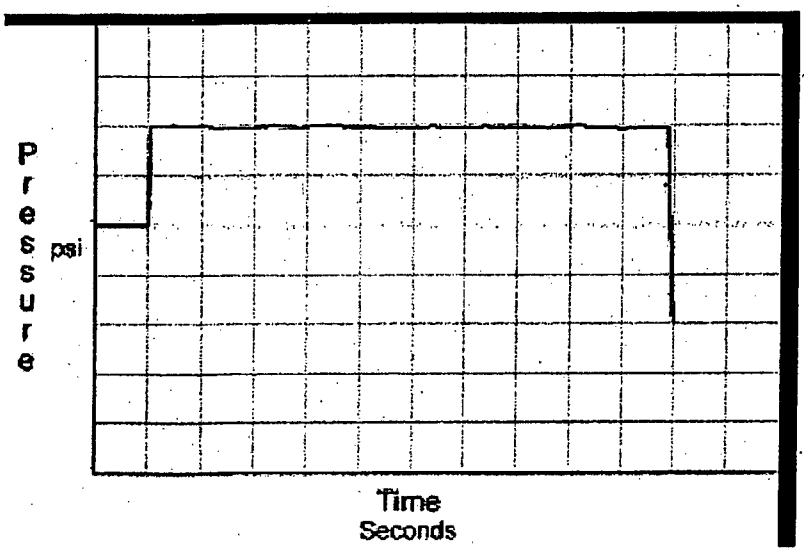

No Heat Soak Time – Pressure maintained during the Heat Soak Cycle

8) Incorrect Procedure

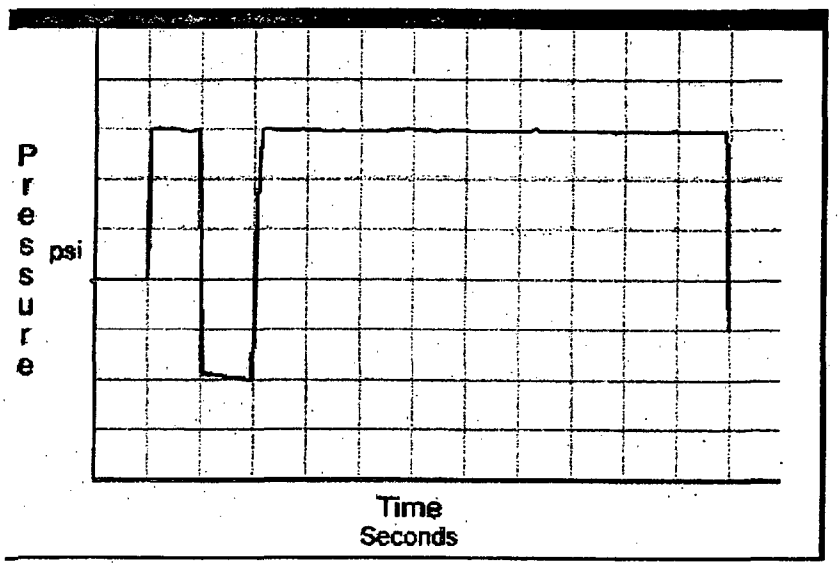

Heat Soak Time is very short. Do a visual examination of the bead size to make sure it is within the butt fusion specifications.

9) Incorrect Procedure

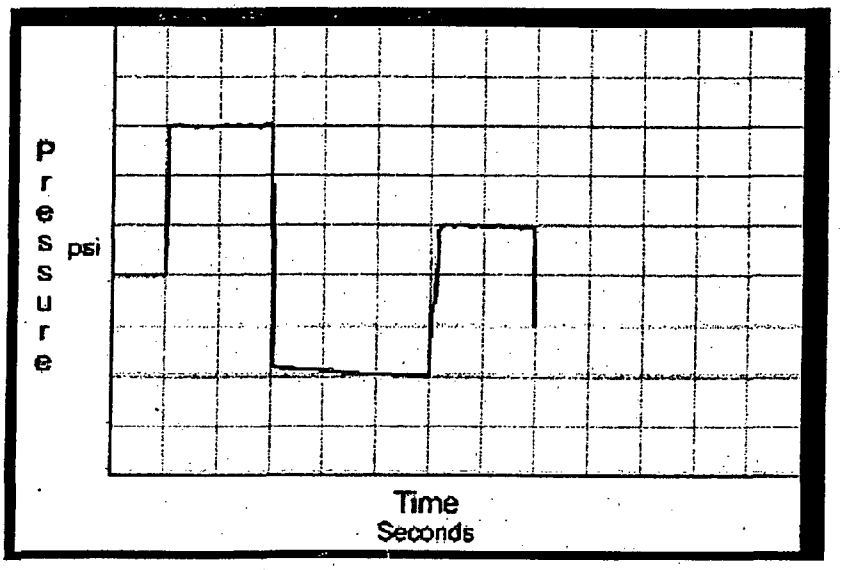

The specified Fusion Gauge Pressure was not applied during the Fuse/Cool cycle The Fuse/Cool Time does not appear long enough. Review Specification

10) Incorrect Procedure

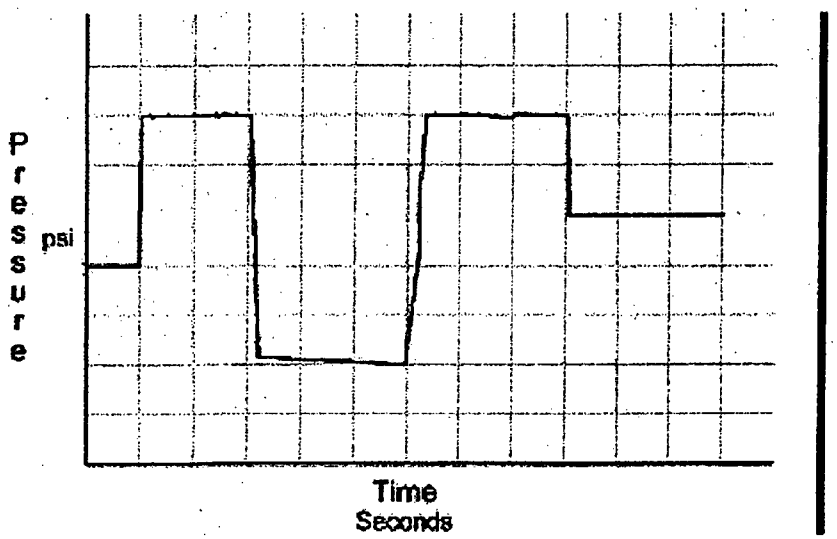

Fusion Gauge Pressure not maintained in the Fuse/Cool cycle for the time in the specification.