HITACHI

GE Hitachi Nuclear Energy

James C. Kinsey
Vice President, ESBWR Licensing

PO Box 780 M/C A-55
Wilmington, NC 28402-0780
USA

T 910 675 5057
F 910 362 5057
jim.kinsey@ge.com

MFN 08-145, Supplement 1

Docket No. 52-010

April 28, 2008

U.S. Nuclear Regulatory Commission
Document Control Desk
Washington, D.C. 20555-0001

Subject: **Revised Response to RAI Number 11.2-16S01, and 11.2-16S02 and Revised DCD Pages for RAI Numbers 11.2-27, 11.3-6, 11.3-10, 11.4-25, 11.4-29 and 11.5-49**

The purpose of this letter is to submit the GE Hitachi Nuclear Energy (GEH) response to the U.S. Nuclear Regulatory Commission (NRC) Request for Additional Information (RAI) sent by NRC letter dated January 15, 2008 (Reference 1), and to submit revised DCD pages for previous responses submitted via Reference 2. The GEH revised response to RAI Number 11.2-16S01 and response to RAI 11.2-16S02 are addressed in Enclosure 1. DCD Markups related to these responses and revised DCD pages for the remaining subject RAIs are provided in Enclosure 2. Note that RAI 11.2-16S02 was submitted via email from the NRC Staff on March 31, 2008, and that the intent of the enclosures is to address the email and the anticipated corresponding NRC Request for Additional Information letter.

Revised DCD Tier 1 and Tier 2 markups reflect the following changes:

1. RAI 11.2-16S01 and 11.2-16S02 – Tier 1, Section 2.10.1 and Table 2.10.1-1, and Tier 2, Subsection 11.2.4 have been revised to include an Inspection Test, Analyses and Acceptance Criteria (ITAAC) for absorbent media in the Liquid Waste Management System (LWMS).
2. RAI 11.2-27 – Subsection 11.2.3 has been revised to reflect that the correct Table reference is 12.2-19a.

D068
NRO

3. RAI 11.3-6 – Subsection 11.3.2.6 has been revised to reflect that the Table 3.2-1 for K30 is for the Offgas System.
4. RAI 11.3-10 – The ** note has been added to Xenon delay in Table 11.3-1.
5. RAI 11.4-25 – Figure 11.4-3 has been revised to include a vent for the Fill Head.
6. RAI 11.4-29 – Figure 11.4-4 has been revised to indicate that trash will be released under the provisions of the licensee's radiation protection program with appropriate references to U.S. NRC Circular 81-07 and Information Notice 85-92.
7. RAI 11.5-49 – Table 11.5-1, TSC HVAC response range has been revised to indicate a range of 1E-4 to 1E0 mSv/hr and 1E-2 to 1E2 mrem/hr.

Verified DCD changes associated with this RAI response are identified in the enclosed DCD markups by enclosing the text within a black box. The marked-up pages may contain unverified changes in addition to the verified changes resulting from this RAI response. Other changes shown in the markup(s) may not be fully developed and approved for inclusion in DCD Revision 5.

If you have any questions or require additional information, please contact me.

Sincerely,

James C. Kinsey

James C. Kinsey
Vice President, ESBWR Licensing

References:

1. MFN 08-039, Letter from U.S. Nuclear Regulatory Commission to Robert E. Brown, GEH, *Request For Additional Information Letter No. 131 Related To ESBWR Design Certification Application*, dated January 15, 2008.
2. MFN 08-145, Letter from James C. Kinsey, GEH, to the U.S. Nuclear Regulatory Commission, Response to NRC Request for Additional Information Letter 131 Related to the ESBWR Design Certification – Radioactive Waste Management Systems – RAI Numbers 11.2-16S01, 11.2-17 through 11.2-31, 11.3-4 through 11.3-12, 11.4-15S02, 11.4-19 through 11.4-32, and 11.5-48 through 11.5-53 dated March 17, 2008

Enclosures:

1. Response to Portion of NRC Request for Additional Information Letter No. 131 Related to ESBWR Design Certification Application Radioactive Waste Management Systems – RAI Numbers 11.2-16S01 and 11.2-16S02
2. Revised DCD Pages for RAI Numbers 11.2-16S01, 11.2-16S02, 11.2-27, 11.3-6, 11.3-10, 11.4-25, 11.4-29 and 11.5-49 – Tier 1 and Tier 2 DCD Markups

cc:	AE Cubbage	USNRC (with enclosure)
	GB Stramback	GEH/San Jose (with enclosure)
	RE Brown	GEH/Wilmington (with enclosure)
	eDRF	0000-0082-3959

Enclosure 1

MFN 08-145, Supplement 1

Response to Portion of NRC Request for Additional Information Letter No. 131 Related to ESBWR Design Certification Application

Radioactive Waste Management Systems

RAI Numbers 11.2-16S01 and 11.2-16S02

NRC RAI 11.2-16 S01:

a. *In DCD, Tier 2, Sections 11.2.2.2 and 11.2.2.3, the ion exchange demineralizers are referred to as "Deep-bed ion exchangers" and also as "Mixed bed ion exchangers." Please explain this inconsistency and update DCD, Tier 2, Sections 11.2.2.2 and 11.2.2.3 accordingly. Also, note that the same observation applies to the proposed revision of DCD, Tier 1, Section 2.10.1, which was included in GEH's response to this RAI.*

b. *The response to RAI 11.2-16 included a proposed update DCD, Tier 1, Table 2.10.1-2. A review of Table 2.10.1-2 indicates that Table 2.10.1-2, "ITAAC For The Liquid Waste Management System" Item 1 is incomplete, as it does not address the introduction of media into subsystem tanks and vessels. Table 2.10.1-2 should state, under the "Inspections, Tests, Analysis" header, that the inspections of the as-built system, includes the introduction of the appropriate types of filtration and adsorbent media in tanks and vessels to meet or exceed the decontamination factors listed in DCD Tier 2, Table 11.*

NRC RAI 11.2-16S02:

Follow-up Comments from the Staff dated March 31, 2008:

The staff disagrees with the response stating that there is no need for stipulating the initial introduction of the appropriate types of filtration and adsorbent media in tanks and vessels of the LWMS in the associated ITAAC, Table 2.10.1-2. DCD Tier 2, Section 14.3.7.2 states that ITAACs will be assigned to systems that are used to "demonstrate how an NRC regulation is met, whether safety significant or not." Moreover, DCD Tier 2, Section 14.3.7.3 states that ITAACs will be addressed in Tier 1 for systems that are "Required to meet a design related NRC regulation or to comply with NRC regulation." Note that in the context of the response, the ODCM cannot be invoked since the NRC has stated (see SECY 05-0197 and Reg. Guide 1.206) that ITAACs cannot be used for the implementation of operational programs, and, consequently, credit for the ODCM in setting alarm set-points for the liquid radwaste discharge monitor (DCD Section 11.5.3.2.5) cannot be claimed as the last line of defense in protecting the public and environment. Note that ITAACs focus on the functional arrangement of the LWMS as a stand along system, which includes all components and the initial introduction of the appropriate types of filtration and adsorbent media in tanks and vessels. Note that if the LWMS were properly built with all mechanical components but without the initial introduction of filtration and adsorbent media, the LWMS would be totally ineffective and fail to meet the design commitments stated in DCD Tier 2, Rev. 4, Section 11.2.1 and decontamination factors listed in Table 11.2-3 as performance indicators. As a result, the staff would not be able to confirm, with reasonable assurance, that the requirements of Parts 52.47(b)(1) and 52.54(a)(5) would be met. Accordingly, update the proposed revision to this RAI response and appropriate sections and tables of DCD Tier 1.

GEH Revised Response:

GEH will revise the Liquid Waste Management System (LWMS) ITAAC to include an acceptance criteria requirement for adsorbent media in DCD Tier 1, Section 2.10.1 and Table 2.10.1-2, accordingly. DCD Tier 2, Subsection 11.2.4 has been revised to reflect that the demineralizers are procured with a certain capability to remove ionic species and impurities to meet requirements in NRC regulations 10 CFR Part 20 and 10 CFR Part 50, Appendix I.

DCD Impact:

DCD Tier 1, Section 2.10.1 and Table 2.10.1-2, and DCD Tier 2, Subsection 11.2.4 will reflect the attached markups in Revision 5.

Enclosure 2

MFN 08-145, Supplement 1

Revised DCD Pages for RAI Numbers 11.2-16S01, 11.2-16S02, 11.2-27, 11.3-6, 11.3-10, 11.4-25, 11.4-29 and 11.5-49

Tier 1 and Tier 2 DCD Markups

2.10 RADIOACTIVE WASTE MANAGEMENT SYSTEM

2.10.1 Liquid Waste Management System

Design Description

The ESBWR Liquid Waste Management System (LWMS) is designed to control, collect, process, handle, store, and dispose of liquid radioactive waste generated as the result of normal operation, including anticipated operational occurrences. The LWMS is designed to process liquid prior to release and ensure compliance with Part 20 effluent concentration and dose limits, and Part 50, Appendix I dose objectives for liquid effluents when the plant is operational.

The LWMS neither performs nor ensures any safety-related function, and is not required to achieve or maintain safe shutdown.

The functional arrangement of the LWMS is that it has components in four subsystems ~~which~~ that receive and store radioactive or potentially radioactive liquid waste. The four LWMS subsystems are as follows:

- Equipment (low conductivity) drain subsystem;
- Floor (high conductivity) drain subsystem;
- Chemical drain subsystem; and
- Detergent drain subsystem.

Table 2.10.1-1 describes the major components in each of these four subsystems. Other equipment includes piping, pumps, and valves for transferring the process flow. The LWMS processing equipment is located in the Radwaste Building. ~~The permanent LWMS will connect to non-permanent mobile systems that process radioactive waste (actual mobile system unit operations and chemical reactors may differ based on improvements in radwaste technology).~~ The LWMS is operated and monitored from the Radwaste Building Control Room. Main control room alarms are provided for key parameters of the LWMS. The LWMS either returns processed water to the condensate system or discharges to the circulating water system.

(1) The LWMS functional [FIR592]arrangement ~~of the LWMS~~ is as described in Subsection 2.10.1 and Table 2.10.1-1.

(2) The LWMS piping systems retain their pressure boundary integrity under internal pressures that will be experienced during service.

(3) LWMS discharge flow ~~to circulating water~~ is monitored for high radiation. Discharge flow is terminated on receipt of a high radiation signal from this monitor. A radiation monitor provides an automatic closure signal to the discharge line isolation valve.

(4) LWS demineralizers have sufficient filtration and demineralizer media specified by design specifications.

Inspections, Tests, Analyses and Acceptance Criteria

Table 2.10.1-2 provides a definition of the inspections, tests, and/or analyses, together with associated acceptance criteria for the Liquid Waste Management System. ITAAC, for the liquid

Design Commitment	Inspections, Tests, Analyses	Acceptance Criteria
4. LWS demineralizers have sufficient filtration and demineralizer media specified by design specifications.	Inspections will be conducted to verify the amount of filtration and demineralization media is loaded in demineralizer vessels.	A report exists and concludes that the vendor specified amount of filtration and demineralization media is loaded in demineralizer vessels.

11.2.3.2 Radioactive Releases

During liquid processing by the LWMS, radioactive contaminants are removed and the bulk of the liquid is purified and either returned to the condensate storage tank or discharged to the environment. The radioactivity removed from the liquid waste is concentrated on filter media, ion exchange resins and concentrated waste. The decontamination factors (DFs) that are listed in Table 11.2-3 and Table 12.2-19a are in accordance with Nuclear Regulation-0016 (NUREG) (Reference 11.2-7), but are considered conservative values. The filter sludge, ion exchange resins and concentrated waste are sent to the Solid Waste Management System (SWMS) for further processing. Liquid samples are collected using the process sampling system described in Subsection 9.3.2. If the liquid meets the purity requirements it is returned to the plant for condensate makeup. If the liquid is discharged, the activity concentration is consistent with the discharge criteria of 10 CFR 20 (Reference 11.2-2) and dose commitment in 10 CFR 50, Appendix I (Reference 11.2-6).

All radioactive releases will be discharged to the circulating water system. Prior to discharging to the environment the contents of the tank being released are sampled and analyzed to ensure that the activity concentration is consistent with the discharge criteria of 10 CFR 20 (Reference 11.2-2) and dose commitment in 10 CFR 50, Appendix I (Reference 11.2-6) are met. A radiation monitor provides an automatic closure signal to the discharge line isolation valve.

The parameters and assumptions used to calculate releases of radioactive materials in liquid effluents and their bases are provided in Chapter 12. The LWMS design ensures that calculated individual doses from the release of radioactive liquid effluents during normal operation and anticipated operational occurrence is less than 0.03 mSv (3 mrem) to the whole body and 0.1 mSv (10 mrem) to any organ.

Expected releases of radioactive materials by radionuclides in liquid effluents resulting from normal operation, including anticipated operational occurrences, and from design basis fuel leakage are provided in Chapter 12.

An assessment of potential radiological liquid releases following a postulated failure of a LWMS tank and its components in accordance with BTP 11-6 (Reference 11.2-11) is provided in Subsection 15.3.16.

A tabulation of the releases by radionuclides can be found in Chapter 12. The tabulation is for the total system and for each subsystem and includes indication of the effluent concentrations. The calculated concentrations in the effluents are within the concentration limits of 10 CFR 20 (Reference 11.2-2); the doses resulting from the effluents are within the numerical design objectives of Appendix I to 10 CFR 50 (Reference 11.2-6) and the dose limits of 10 CFR 20 (Reference 11.2-2) as set forth in Chapter 12.

11.2.3.3 Dilution Factors

Refer to Section 12.2 for dilution factors used in evaluating the release of liquid effluents.

11.2.4 Testing and Inspection Requirements

LWMS inspection and testing requirements are identified in Table 11.2-1. The LWMS is given a pre-operational test as discussed in Chapter 14. Thereafter, portions of the systems are tested as needed.

During initial testing of the system, the pumps and ~~mobile~~ process systems are performance tested to demonstrate conformance with design flows and process capabilities. An integrity test is performed on the system upon completion.

Provisions are made for periodic inspection of major components to ensure capability and integrity of the systems. Display devices are provided to indicate vital parameters required in routine testing and inspection.

The demineralizers are procured with a certain capability to remove ionic species and impurities to meet requirements in NRC regulations 10 CFR Part 20 and 10 CFR Part 50, Appendix I, to ensure that the decontamination factors for effluent releases do not exceed regulatory limits (see Table 11.2-3). Thus, an inspection of the amount of filtration and demineralizer media will be conducted to verify that the loading meets the vendor recommended loading for the demineralizer capabilities as specified in vendor material, such as a vendor manual, for the equipment.

The quality assurance program for design, fabrication, procurement, and installation of the liquid radioactive waste system is in accordance with the overall quality assurance program described in Chapter 17.

11.2.5 Instrumentation Requirements

The LWMS is operated and monitored from the Radwaste Building Control Room (RWBCR). Major system parameters, i.e., tank levels, process flow rates, filter and ion exchanger differential pressure, ion exchanger effluent conductivity, etc., are indicated and alarmed as required to provide operational information and performance assessment. A continuous radiation detector, as described in Subsection 11.5.3.2.~~6~~5, is provided to monitor the discharge of radioactivity to the environs. Key system alarms are repeated in the main control room.

11.2.6 COL Information

11.2-1-A Implementation of IE Bulletin 80-10

The COL Applicant is responsible, initially and subsequently, for the identification of ~~mobile/portable~~ LWMS process system connections that are considered non-radioactive, but later become radioactive through interfaces with radioactive systems; i.e., a non-radioactive system becomes contaminated due to leakage, valving errors or other operating conditions in radioactive systems using the guidance and information in IE Bulletin 80-10 (May 6, 1980) (Reference 11.2-10) (Subsection 11.2.2.3).

11.2-2-A Implementation of Part 20.1406

The COL Applicant will include site-specific information describing how the implementation of operating procedures ~~and design features for installation and operation of the mobile/portable~~ LWMS process system will address the requirements of Part 20.1406 (Reference 11.2-9) (Subsection 11.2.2.3).

normal for power operation. However, it may be used if the resulting activity release is acceptable.

11.3.2.5.11 Valves

All valves with operators located on the gas process stream are operable from the main control room. Where radiation levels permit, valves handling process fluids are installed in service areas where maintenance can be performed if needed during operation.

11.3.2.5.12 Nitrogen and Air Purge

A nitrogen purge and air supply line is connected to the offgas process just upstream of the first in-line charcoal adsorber vessel (guard bed). This arrangement is to allow the vessel to be nitrogen purged after a possible fire is detected or dried with heated air if the charcoal is wetted, while the offgas flow is bypassed around it and through the remaining charcoal vessels. Another nitrogen purge line is also provided just upstream of the remaining charcoal adsorber vessels that allows them to be purged, if required, without interrupting the processing of offgas through the guard bed. Both nitrogen purge lines are equipped with double check valves and tell-tale leak-off connections to permit periodic checks to confirm their integrity and to minimize contamination of the nitrogen system. The isolation valves in the nitrogen and air purge lines and the connection for the gas supply are accessible from outside the charcoal vault.

11.3.2.6 Component Design

For portions of the system that may contain an explosive mixture, the design provides for ignition sources to be minimized and the system to be able to sustain an explosion without loss of integrity. This analysis is covered in proprietary report NEDE-11146 (Reference 11.3-11).

Calculation methods for translation of detonation pressures into wall thickness are summarized in the ANSI-55.4 (Reference 11.3-6). Equipment are designed and constructed in accordance with the requirements of Table 11.3-2.

Tank codes are per the noted requirements of Table 3.2-1 for K30 Offgas Systems.

11.3.2.6.1 Materials

Per RG 1.143 (Reference 11.3-3), Regulatory Position 2.2, materials for pressure-retaining components of process systems[1] are selected from those covered by the material specifications listed in Section II, Part A of the ASME Boiler and Pressure Vessel Code, except that malleable, wrought or cast-iron materials, and plastic pipe are not allowed in this application. The components satisfy the mandatory requirements of the material specifications with regard to manufacture, examination, repair, testing, identification, and certification.

11.3.2.6.2 Pressure Relief

Adequate pressure relief is provided at all locations where it is possible to isolate a portion of the system containing a potential heat source that could cause excessive pressure. Adequate pressure relief is also provided downstream of pressure reducing valves to protect equipment from overpressure. Radioactive gaseous pressure relief discharge is piped to the main condenser.

1 "Process System" refers to that portion of the OGS that normally processes SJAE Offgas.

Table 11.3-1

Offgas System Design Parameters*

Design Parameter	Design Value
Design basis noble radiogas release rate	3700 MBq/s (100,000 μCi/s)
Assumed air in-leakage	51 m^3/h standard (30 scfm)
Xenon delay	60-day**
Krypton delay	78.6 hours**
Argon delay	27.2 hours**
Iodine removal efficiency	99.99** and ***
Maximum gaseous waste stream temperature	67°C (153°F)
Charcoal temperature (approximate)	35°C (95°F)
Maximum cooler condenser temperature	18°C (65°F)
Chilled water temperature	7°C (45°F)
Gaseous waste stream temperature	35°C (95°F)
Nominal recombiner preheater temperature	177°C (351°F)
Maximum recombiner preheater temperature	210°C (410°F)
Out-of-service hydrogen/oxygen catalytic recombiner minimum temperature	121°C (250°F)
Minimum activated charcoal ignition temperature	156°C (313°F)
Minimum air bleed supply rate	0.17 m^3/min (6 scfm)
Air bleed to standby recombiner train at startup and normal operation	0.17 m^3/min (6 scfm)
Radiolytic gas flow range	0 to 8.6 m^3/min (302 scfm)
Charcoal adsorber vault temperature range	29°C (84°F) to 40°C (104°F)
Charcoal particle size	8 – 16 mesh United States Standard (USS) with less than 0.5% under 20 mesh
Charcoal moisture content	< 5% by weight
Maximum offgas activity input concentration	5.9E+6 Bq/cm^3
Charcoal Guard Bed Mass	33,000 lbs (15 metric tons)
Charcoal Bed Mass	490,000 lbs (222 metric tons)

* For additional information on radioactive releases, refer to Sections 11.1 or 12.2.
** Offgas processing equipment will meet or exceed these values.
*** No Iodine is assumed to be released.

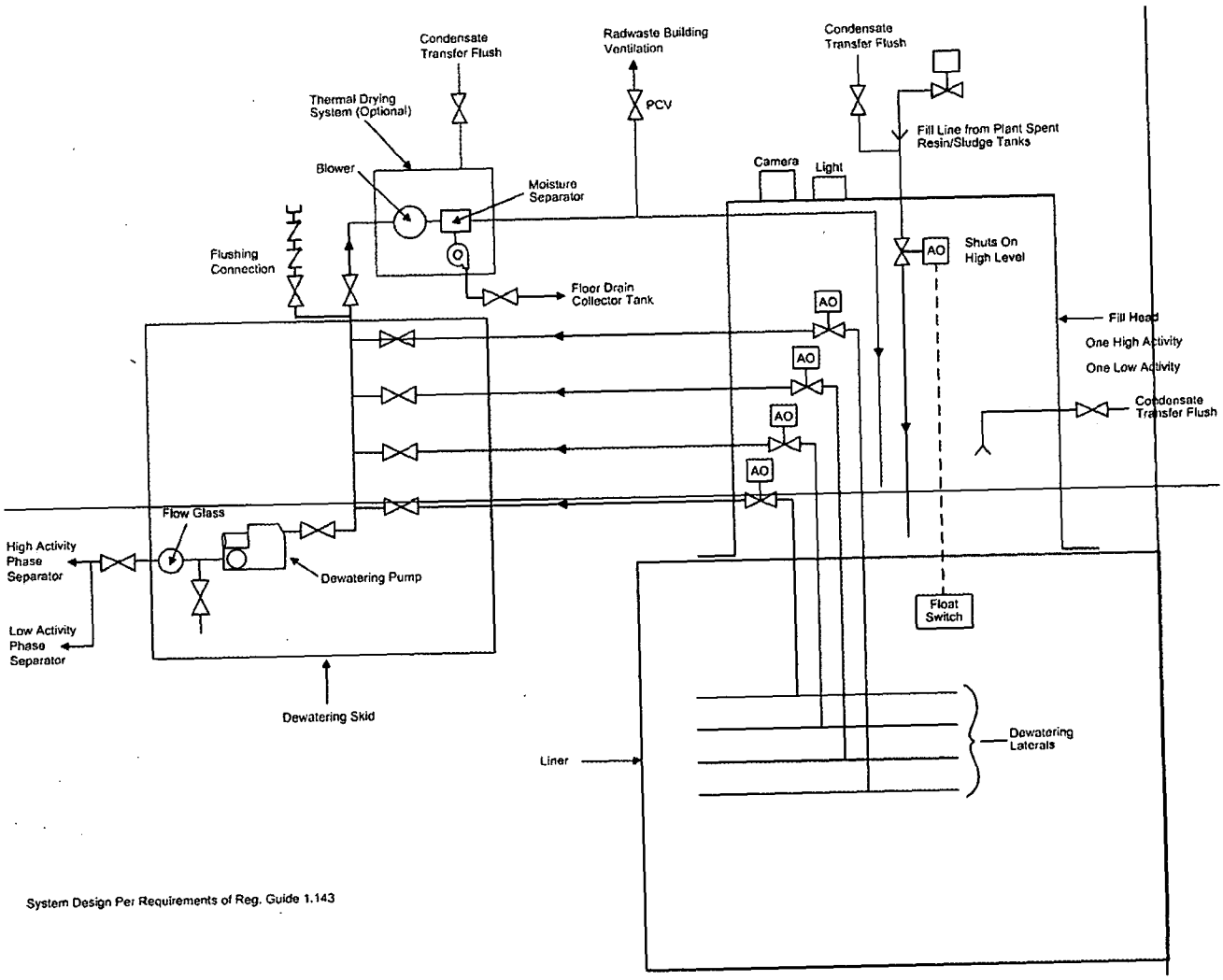
Condensate Transfer Flush
Radwaste Building Ventilation
Condensate Transfer Flush
Thermal Drying System (Optional)
PCV
Fill Line from Plant Spent Resin/Sludge Tanks
Blower
Camera
Light
Moisture Separator
Flushing Connection
AO
Shuts On High Level
Floor Drain Collector Tank
AO
Fill Head
One High Activity
One Low Activity
AO
Condensate Transfer Flush
AO
AO
Flow Glass
High Activity Phase Separator
Dewatering Pump
Float Switch
Low Activity Phase Separator
Dewatering Skid
Dewatering Laterals
Liner
System Design Per Requirements of Reg. Guide 1.143

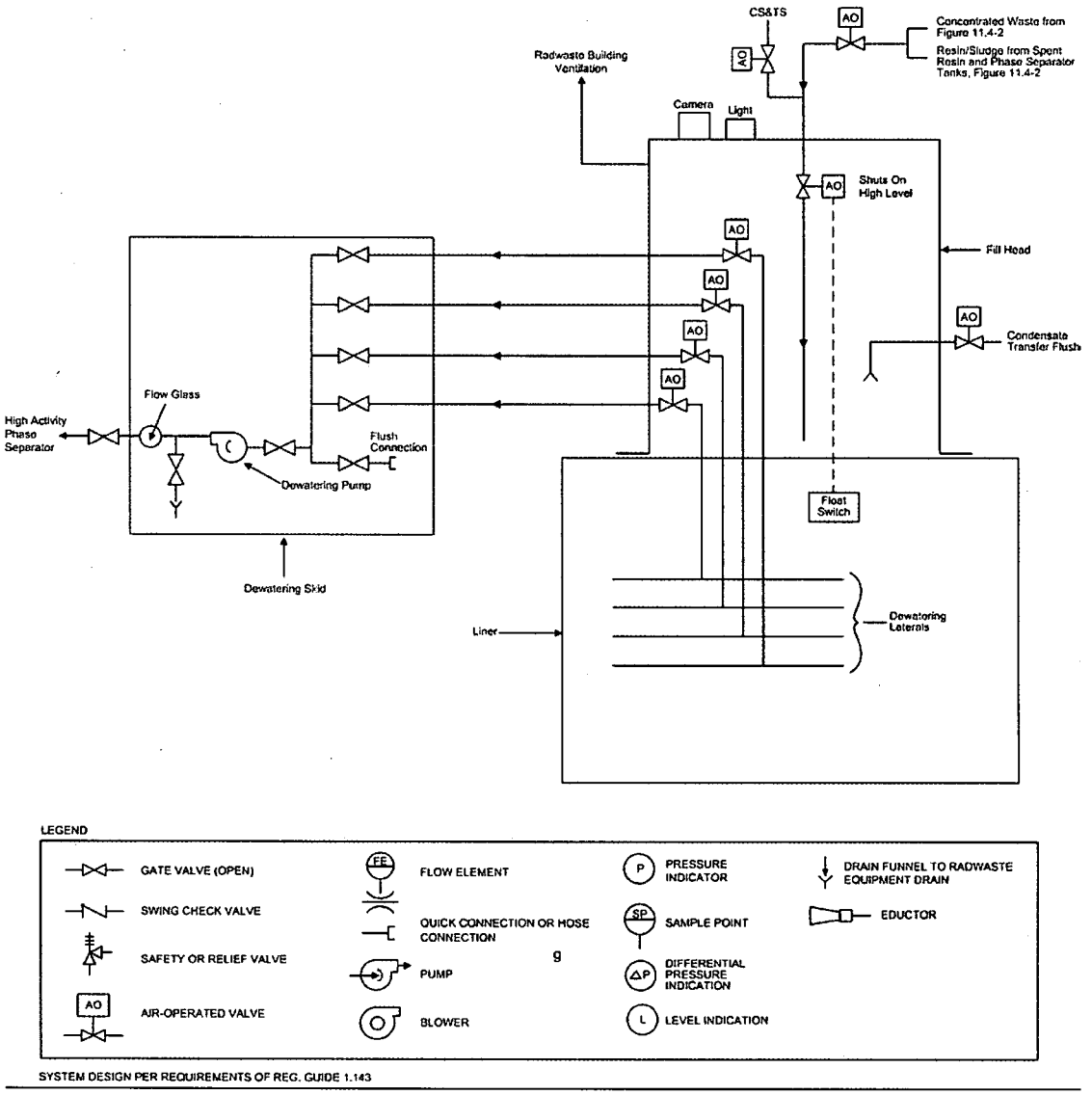

Figure 11.4-3. ~~SWMS Solid Radwaste Dewatering System (Conceptual Design)~~Wet Solid Waste Processing Subsystem

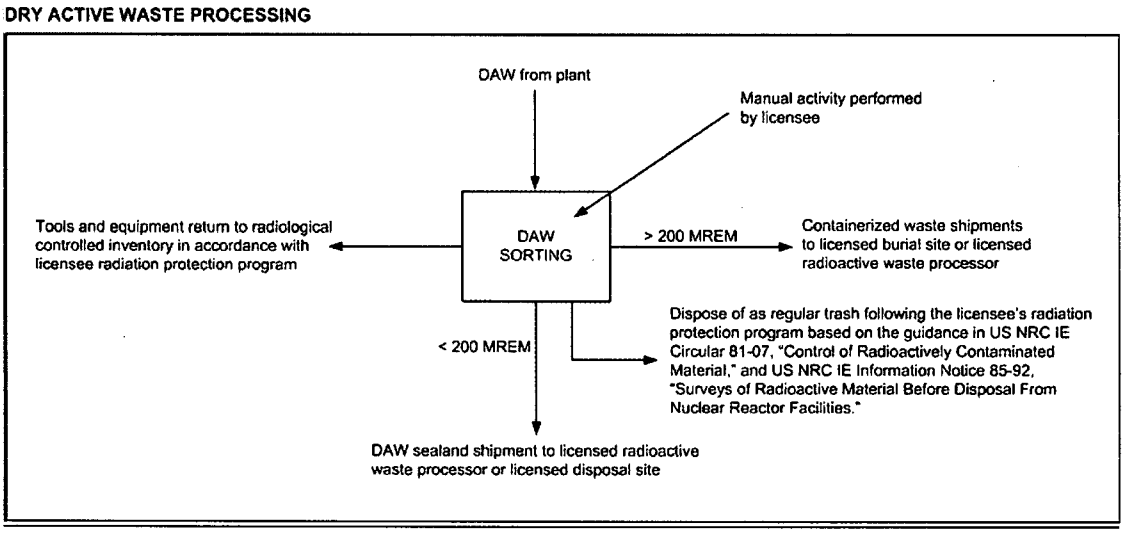

Figure 11.4-4. Dry Active Waste Processing

Table 11.5-1

Process and Effluent Radiation Monitoring Systems

Monitored Process	No. of Channels	Sample Line or Detector Location	Displayed Channel Range* and **
Reactor Component Cooling Water Intersystem Leakage	2	Each RCCW heat exchanger line exit	1E-1 to 1E5 MBq/m^3 (2.7E0 to 2.7E6 μCi/m^3)
TSC HVAC Air Intake	1	Intake HVAC duct	1E-4 to 1E0 mSv/h (1E-~~6~~2 to 1E2 mRem/h)
Drywell Fission Product (Particulate)	1	Sample line from drywell atmosphere	1E-7 to 1E-1 MBq/m^3 (2.7E-6 to 2.7E0 μCi/m^3)
Drywell Fission Product (Gaseous)	1	Sample line from drywell atmosphere	1E-1 to 1E4 MBq/m^3 (2.7E0 to 2.7E5 μCi/m^3)
FB Combined Ventilation Exhaust	3	Sample Line from HVAC exhaust leaving FB	1E-3 to 1E3 MBq/m^3 (2.7E-2 to 2.7E4 μCi/m^3) (gaseous) 1E-7 to 1E-1 MBq/m^3 (2.7E-6 to 2.7E0 μCi/m^3) (particulate) 1E-7 to 1E-1 MBq/m^3 (2.7E-6 to 2.7E0 μCi/m^3) (iodine)

* MBq/m^3 = mega-becquerel per cubic meter; mSv/h = milli-Sieverts per hour

** ~~Performs no safety-related closure function~~The "MBq/m^3" displayed channel range measurement unit is utilized to present to the operator the relationship between an acceptable regulatory offsite dose concentration and the actual concentration, measured at the point of interest, in comparable scientific units. Display units for all other channels not indicating "MBq/m^3" use other scientific units, such as "mSv/hr", that are comparable with their intended use. The units are not directly used to present to the operator any information concerning offsite dose concentrations. Thus, units such as "mSv/hr" are used to indicate a dose rate associated with the radioactivity contained in the process at the point of measurement, and the subsequent actions taken by the operator are not predicted on directly viewing a relationship with an offsite concentration.